WHANGANUI
DISTRICT COUNCIL
Te Kaunihera a Rohe o Whanganui

IMPORTANT NOTE

These documents are required to be onsite for all inspections and must be a complete and full copy of the WDC stamped “Approved” documents.

Failure to have a full and legible set of documents may result in a terminated inspection. A terminated inspection will incur additional charges.

Bcon21/0800 - WDC Approved Plans - 15/12/2021

101 Guyton Street
P O Box 637, Whanganui
Phone: (06) 349 0001
Fax: (06) 349 0000
Email: wdc@whanganui.govt.nz
Web: www.whanganui.govt.nz

WHANGANUI DISTRICT COUNCIL
Te Kaunihera a Rohe o Whanganui

INSPECTION RECORD

This record, together with the Building Consent and approved plans, is to remain on the construction site at all times.

Project Location	***TO BOOK AN INSPECTION PLEASE PHONE WDC BUILDING CONTROL ON 349 0001 AND QUOTE THE FOLLOWING APPLICATION NUMBER:***	***BCon21/0800***
12 Downes Ave WHANGANUI		
Description of Work	**Construct Conservatory.**	

Applicant	Mr PT McKenna 3 Buxton Road, Westmere, Whanganui 4501

SUMMARY OF CONDITIONS

Building Consent Number BCon21/0800

PIM Conditions

Code	***Condition***
	All work on the project must comply with the requirements of the NZ Building Code.
	A PIM only document is not an approval to build. A Building Consent is required before building work commences.
	W.D.C will follow up on building work not completed within two years of building consent issue.
	A Building Consent lapses and is of no effect if the building work has not been started within 12 months of the date of issue.
	If the building is public premises it may not be occupied until either a code compliance certificate or certificate for public use has been issued.
	Please note [Electrical, and Gasfitting subtrades do not form part of the building consent inspection process. However, Council is required to receive 'Energy Certificates' from both of these trades before issue of a Code Compliance Certificate].

Building Consent Information

Code	***Information***

Your project's inspections are listed on the next page...

Bcon21/0800 - WDC Approved Plans - 15/12/2021

101 Guyton Street
P O Box 637, Whanganui
Phone: (06) 349 0001
Fax: (06) 349 0000
Email: wdc@whanganui.govt.nz
Web: www.whanganui.govt.nz

WHANGANUI DISTRICT COUNCIL
Te Kaunihera a Rohe o Whanganui

Please Note: A minimum of 48 hours notice is required for the booking of an inspection. The inspection record sheet and accompanying building consent documentation must be on site for use by the inspector at the time of the inspection.

All inspections are to be carried out by BCA Building Inspectors unless prior arrangements have been made by the BCA to have an approved qualified person inspect specific items (eg. Engineer). Inspections shall be carried out in accordance with the attached schedule of inspection types. It is the owner's responsibility to ensure all necessary inspections are carried out as required. Please contact WDC if you are unsure what requires inspection – do not cover or enclose any building work without inspection.

Note: Further inspections may incur additional cost at time of Code Compliance Certificate issue.

Inspections Record For Building Consent Number BCon21/0800

Inspection	*When to Request*	*Date*	*Inspector*	*Complies with Code*	*Reinspect*	*Notes*		
FINAL BUILDING AND PLUMBING COMBINED INSPECTION	On Completion					Please submit electronically after Final Inspection the completed CCC application form and any energy certificates if required. Any requested As Built drainage plans. Smoke alarms to be checked at time of final inspection		

Bcon21/0800 - WDC Approved Plans - 15/12/2021

101 Guyton Street
P O Box 637, Whanganui
Phone: (06) 349 0001
Fax: (06) 349 0000
Email: wdc@whanganui.govt.nz
Web: www.whanganui.govt.nz

WHANGANUI DISTRICT COUNCIL
Te Kaunihera a Rohe o Whanganui

BUILDING CONSENT NUMBER BCon21/0800

Section 51, Building Act 2004

The building:

Street address of building:	***Legal description of land where building is located:***
12 Downes Ave WHANGANUI	LOT 17 DP 58510 0.0619 Ha
Building name:	***Location of building within site/block number:***
Level/unit number:	

The owner:

Name of Owner:	
Mrs PM Woon, Mr TW Woon	
Mailing address:	***Street Address/registered Office:***
12 Downes Avenue Springvale Whanganui 4501	12 Downes Avenue Springvale Whanganui 4501

Phone numbers:

Landline:	3487226 063487226	***Mobile:***	0277177378 0272933520
Daytime:		***After hours:***	
Facsimile number:			
Email address:		***Website:***	

First point of contact for communications with the building consent authority:

Contact Person:	
Mr PT McKenna	
Mailing address:	***Street Address/registered Office:***
3 Buxton Road, Westmere, Whanganui 4501	3 Buxton Road, Westmere, Whanganui 4501

Phone number:

Landline:	063444729	***Mobile:***	0211261333
Daytime:		***After hours:***	
Facsimile number:	063447269		
Email address:	pmarchitecture@outlook.com	***Website:***	

Building Work

The following building work is authorised by this consent

Project
Construct Conservatory.

Bcon21/0800 - WDC Approved Plans - 15/12/2021

101 Guyton Street
P O Box 637, Whanganui
Phone: (06) 349 0001
Fax: (06) 349 0000
Email: wdc@whanganui.govt.nz
Web: www.whanganui.govt.nz

WHANGANUI DISTRICT COUNCIL
Te Kaunihera a Rohe o Whanganui

Intended Use	***Intended Life***
Single Detached Residential	50+ Years
Estimated Value ($)	
$19000.00	

This building consent is issued under section 51 of the Building Act 2004. This building consent does not relieve the owner of the building (or proposed building) of any duty of responsibility under any other Act relating to or affecting the building (or proposed building). This building consent also does not permit the construction, alteration, demolition, or removal of the building (or proposed building) if that construction, alteration, demolition or removal would be in breach of any other Act.

Bcon21/0800 - WDC Approved Plans - 15/12/2021

101 Guyton Street
P O Box 637, Whanganui
Phone: (06) 349 0001
Fax: (06) 349 0000
Email: wdc@whanganui.govt.nz
Web: www.whanganui.govt.nz

WHANGANUI DISTRICT COUNCIL
Te Kaunihera a Rohe o Whanganui

CONDITIONS OF BUILDING CONSENT NUMBER BCon21/0800

Section 51, Building Act 2004

This Building Consent is issued Subject to the following conditions:

Building Act 2004, Section 90:

Inspections by Building Consent Authorities

Agents authorised by the building consent authority for the purposes of this section are entitled, at all times during normal working hours or while building work is being done, to inspect

(a) land on which building work is being or is proposed to be carried out; and

(b) building work that has been or is being carried out on or off the building site; and

(c) any building.

Compliance Schedule:

A compliance schedule (CS) is not required for this building.

‡Attachments

‡Copies of the following documents are attached to this building consent:
‡Project information memorandum number BCon21/0800
‡Inspection record
‡Informative notes

Signed for and on behalf of the Whanganui District Council

GJ Hoobin
Building Control Manager

Date: 15 December 2021

Bcon21/0800 - WDC Approved Plans - 15/12/2021

101 Guyton Street
P O Box 637, Whanganui
Phone: (06) 349 0001
Fax: (06) 349 0000
Email: wdc@whanganui.govt.nz
Web: www.whanganui.govt.nz

WHANGANUI DISTRICT COUNCIL
Te Kaunihera a Rohe o Whanganui

BUILDING CONSENT NUMBER BCon21/0800

Informative notes:

- The Building Consent, conditions, inspection sheet, and approved plans must be kept on site at all times until completion of the project.
- Failure to request inspections will risk the non-issuing of a code compliance certificate and the structure may be deemed non-complying.
- Any inspection time required over and above that allowed may incur a further charge.
- Under Section 52, a building consent lapses and is of no effect if the building work to which it relates is not commenced within 12 months after the date of issue.
- Under Section 93, if the owner has not made application within 24 months, the BCA (Building Control Authority), must decide whether or not to issue a CCC (Code Compliance Certificate).

Bcon21/0800 - WDC Approved Plans - 15/12/2021

101 Guyton Street
P O Box 637, Whanganui
Phone: (06) 349 0001
Fax: (06) 349 0000
Email: wdc@whanganui.govt.nz
Web: www.whanganui.govt.nz

WHANGANUI DISTRICT COUNCIL
Te Kaunihera a Rohe o Whanganui

PROJECT INFORMATION MEMORANDUM NUMBER BCon21/0800

Section 35, Building Act 2004

Mr PT McKenna
3 Buxton Road
Westmere
Whanganui 4501

Project Location	***Assessment Number/Legal Description***
12 Downes Ave WHANGANUI	LOT 17 DP 58510 0.0619 Ha
Category	***Description of Work***
Minor Building Work (req. 2 insps.)	Construct Conservatory.
Intended Life	***Estimated Value ($)***
50+ Years	19000.00

This Project Information Memorandum is confirmation that the proposed work may be undertaken, subject to the provisions of the Building Act 2004 and any requirements of the Building Consent (number BCon21/0800), which has been granted.

This Project Information Memorandum is subject to the following conditions:

- **All work on the project must comply with the requirements of the NZ Building Code.**

Signed for and on behalf of the Whanganui District Council

GJ Hoobin
Building Control Manager **Date**: 15 December 2021

Bcon21/0800 - WDC Approved Plans - 15/12/2021

RECORD OF TITLE
UNDER LAND TRANSFER ACT 2017
FREEHOLD

Search Copy

R.W. Muir
Registrar-General
of Land

Identifier	**WN28A/670**
Land Registration District	**Wellington**
Date Issued	16 January 1986

Prior References
WN10D/348

Estate	Fee Simple
Area	619 square metres more or less
Legal Description	Lot 17 Deposited Plan 58510

Registered Owners
Trevor William Woon as to a 1/2 share
Patricia Miriama Woon as to a 1/2 share

Interests

RECEIVED 1/12/2021

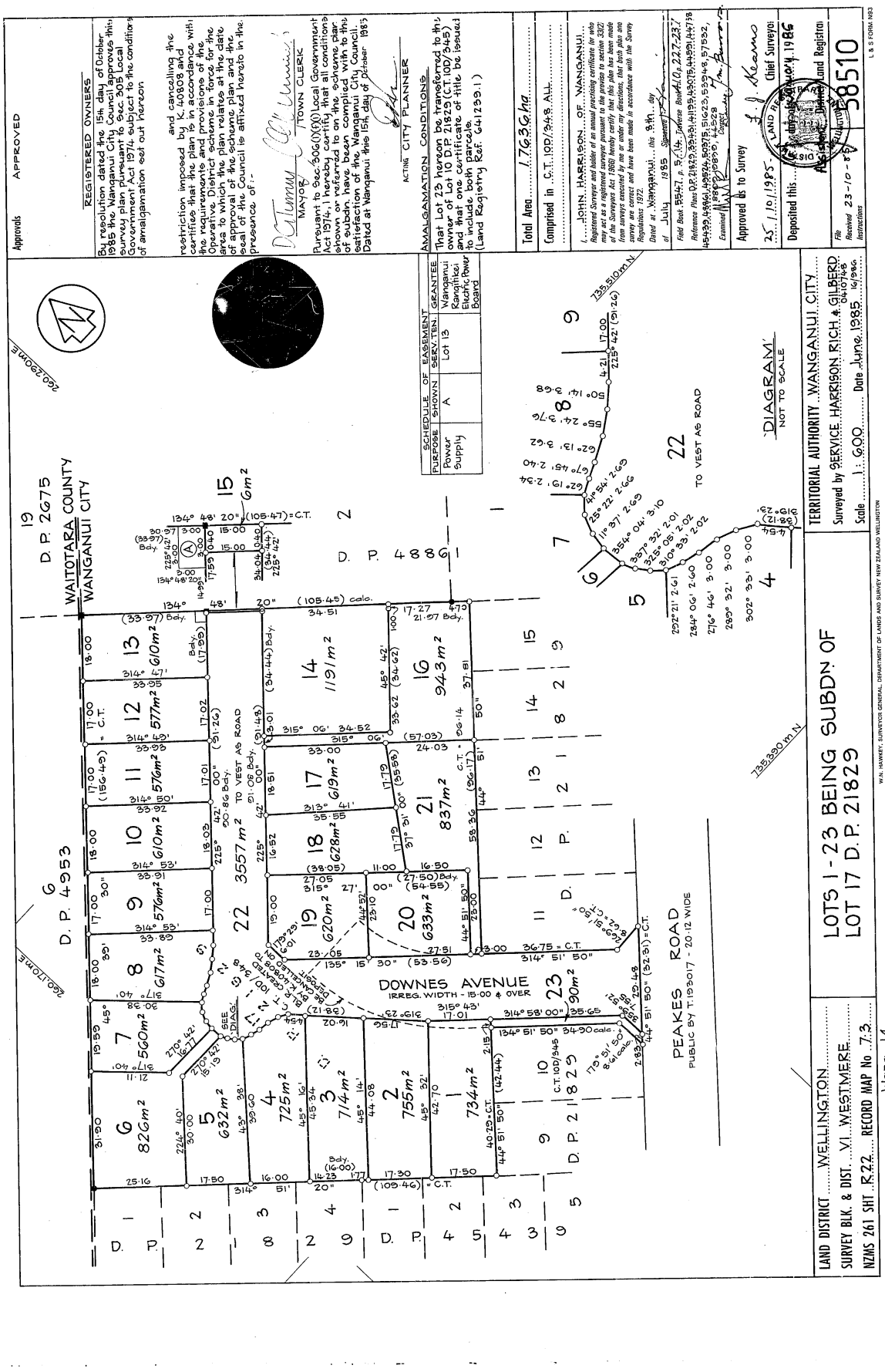

RECEIVED 1/12/2021

Bcon21/0800 - WDC Approved Plans - 15/12/2021

Paul McKenna architecture

Agent Authorisation

Owner Name

Patricia Doon

Contact Phone

027 717 7378

Email Address

New Conservatory

Project Description

12 Downes Ave.

Project Address

I/we confirm that we authorise Paul McKenna to act on our behalf for the purposes of applying for a Building Consent for our project.

Signed

Date 29.11.21.

RECEIVED 1/12/2021

ADDRESS 3 Buxton Road Wanganui 4501
PHONE (06) 3444 729
FAX (06) 3447 269
MOBILE 021 126 1333
EMAIL paulmck@ihug.co.nz

LICENSED BUILDING PRACTITIONER www.dbh.govt.nz BUILDING CONFIDENCE

Bcon21/0800 - WDC Approved Plans - 15/12/2021

Paul McKenna architecture

Agent Authorisation

Owner Name

Trevor Wood

Contact Phone

027 2433520 — 3487226

Project Description

Conservatory on Back Porch

Project Address

12 Dawnes Ave, Springvale

I/we confirm that we authorise Paul McKenna to act on our behalf for the purposes of applying for a Building Consent for our project.

Signed T L Wood Date 1/6/21

RECEIVED 1/12/2021

ADDRESS 3 Buxton Road Wanganui 4501
PHONE (06) 3444 729
FAX (06) 3447 269
MOBILE 021 126 1333
EMAIL paulmck@ihug.co.nz

LICENSED BUILDING PRACTITIONER www.dbh.govt.nz BUILDING CONFIDENCE

Memorandum from licensed building practitioner: Certificate of design work

Section 45 and section 30C, Building Act 2004

Please fill in the form as fully and correctly as possible.

If there is insufficient room on the form for requested details, please continue on another sheet and attach the additional sheet(s) to this form.

THE BUILDING	
Street address: 12 Downes Ave	
Suburb:	
Town/City: Wanganui	Postcode:

THE OWNER(S)	
Name(s): Trevor Woon	
Mailing address: 12 Downes Ave	
Suburb:	PO Box/Private Bag:
Town/City: Wanganui	Postcode:
Phone number:	Email address:

RECEIVED 1/12/2021

BASIS FOR PROVIDING THIS MEMORANDUM

I am providing this memorandum in my role as the: Please tick the option that applies ✓

- a **sole** designer of all of the RBW design outlined in this memorandum – I carried out all of the RBW design work myself – no other person will be providing any additional memoranda for the project
- ○ **lead** designer who carried out some of the RBW design myself but also supervised other designers – this memorandum covers their RBW design work as well as mine, and **no other** person will be providing any additional memoranda for the project
- ○ **lead** designer for all but specific elements of RBW – this memorandum only covers the RBW design work that I carried out or supervised and the **other** designers will provide their own memorandum relating to their specific RBW design
- ○ **specialist** designer who carried out specific elements of RBW design work as outlined in this memorandum – other designers will be providing a memorandum covering the remaining RBW design work

IDENTIFICATION OF DESIGN WORK THAT IS RESTRICTED BUILDING WORK (RBW)

I Paul McKenna carried out / supervised the following design work that is restricted building work

PRIMARY STRUCTURE: B1

Design work that is RBW	Description of RBW	Carried out or supervised	Reference to plans and specifications
Tick ✓ if included. Cross ⊗ if excluded	If appropriate, provide details of the RBW	Tick ✓ whether you carried out this design work or supervised someone else carrying out this design work	If appropriate, specify references
All RBW design work relating to B1 ○		○ Carried out ○ Supervised	
Foundations and subfloor framing ○		○ Carried out ○ Supervised	

RECEIVED 1/12/2021

Design work that is RBW	Description of RBW	Carried out or supervised	Reference to plans and specifications
Tick ✓ if included. Cross ✗ if excluded	If appropriate, provide details of the RBW	Tick ✓ whether you carried out this design work or supervised someone else carrying out this design work	If appropriate, specify references
Walls ◯	To Omega design system	◯ Carried out ◯ Supervised	
Roof ◯	To Omega design system	◯ Carried out ◯ Supervised	
Columns and beams ◯		◯ Carried out ◯ Supervised	
Bracing ◯	To Omega design system	◯ Carried out ◯ Supervised	
Other ◯		◯ Carried out ◯ Supervised	

RECEIVED 1/12/2021

Bcon21/0800 - WDC

Design work that is RBW	Description of RBW	Carried out or supervised	Reference to plans and specifications
Tick ✓ if included. Cross ✗ if excluded	If appropriate, provide details of the RBW	Tick ✓ whether you carried out this design work or supervised someone else carrying out this design work	If appropriate, specify references
EXTERNAL MOISTURE MANAGEMENT SYSTEMS: E2			
All RBW design work relating to E2 ○		○ Carried out ○ Supervised	
Damp proofing ○		○ Carried out ○ Supervised	
Roof cladding or roof cladding system a	Junctions of conservatory walls to existing soffit and Garage Walls	a ○ Carried out ○ Supervised	
Ventilation system (for example, subfloor or cavity) ○		○ Carried out ○ Supervised	
Wall cladding or wall cladding system a	Junctions of conservatory walls to house and floor	a ○ Carried out ○ Supervised	
Waterproofing ○		○ Carried out ○ Supervised	
Other ○		○ Carried out ○ Supervised	

RECEIVED 1/12/2021

Design work that is RBW	Description of RBW	Carried out or supervised	Reference to plans and specifications
Tick ✓ if included. Cross ✗ if excluded	If appropriate, provide details of the RBW	Tick ✓ whether you carried out this design work or supervised someone else carrying out this design work	If appropriate, specify references
FIRE SAFETY SYSTEMS: C1 - C6			
Emergency warning systems Evacuation and fire service operation systems ◯ Suppression or control systems Other		◯ Carried out ◯ Supervised	

Note: The design of fire safety systems is only restricted building work when it involves small-to-medium apartment buildings as defined by the Building (Definition of Restricted Building Work) Order 2011.

WAIVERS AND MODIFICATIONS

Waivers or modifications of the Building Code are required. ◯ Yes ✗ No

If Yes, provide details of the waivers or modifications below:

Clause	Waiver/modification required
List relevant clause numbers of building code	Specify nature of waiver or modification of building code required

RECEIVED 1/12/2021

ISSUED BY

Name and contact details of the licensed building practitioner who is licensed to carry out or supervise design work that is restricted building work.

Name: Paul McKenna	LBP or Registration number: 113318
The practitioner is a: ☒ Design LBP ○ Registered architect ○ Chartered professional engineer	
Design Entity or Company (optional):	
Mailing address (if different from below):	
Street address/Registered office: 3 Buxton Rd	
Suburb: Springvale	Town/City: Wanganui
PO Box/Private Bag:	Postcode: 4501
Phone number: 06 3444 729	Mobile: 021 126 1333
After hours: 06 3444 729	Fax: 06 344 7269
Email address: paulmck@ihug.co.nz	Website:

DECLARATION

I Paul McKenna LBP, state that I have applied the skill and care reasonably required of a competent design professional in carrying out or supervising the Restricted Building Work (RBW) described in this form, and that based on this, I also state that the RBW:

- Complies with the building code, or
- Complies with the building code subject to any waiver or modification of the building code recorded on this form

Signature: 

Date: 4/11/21

RECEIVED 1/12/2021

Bcon21/0800 - WDC Approved Plans - 15/12/2021

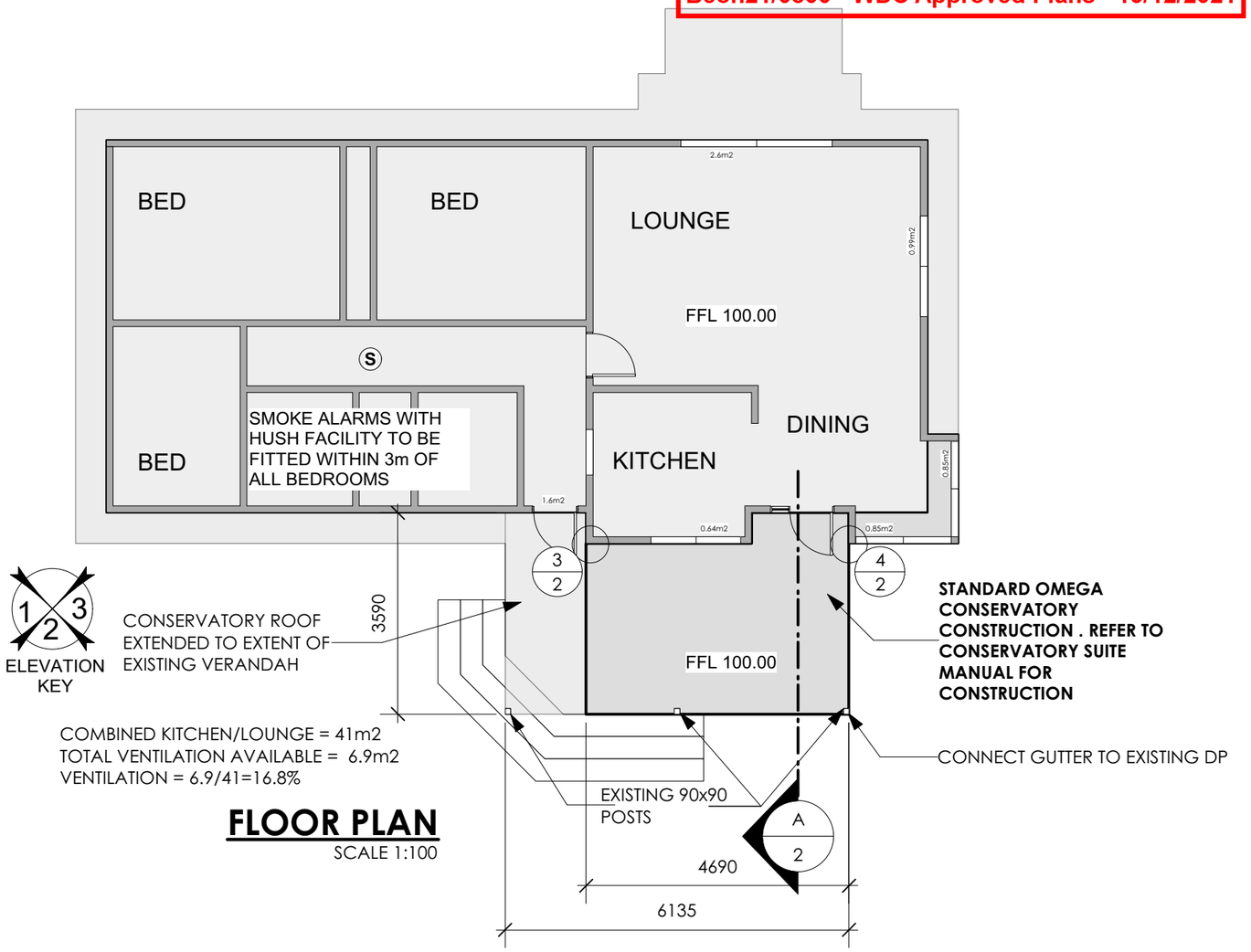

FLOOR PLAN
SCALE 1:100

DOWNES AVE

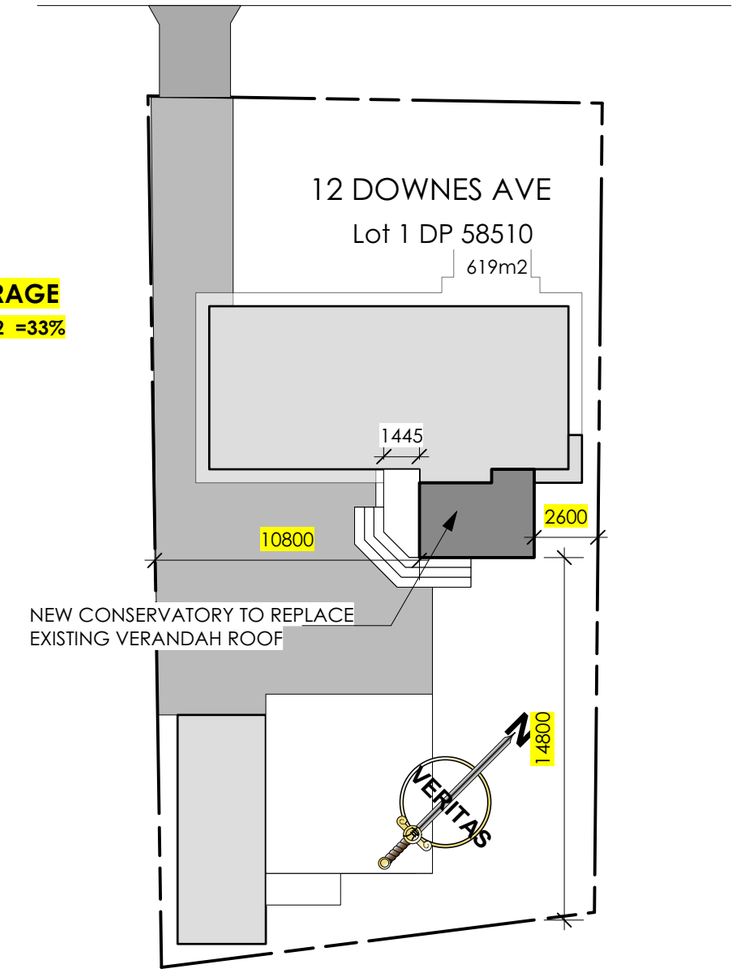

SITE COVERAGE
202m2 /619m2 =33%

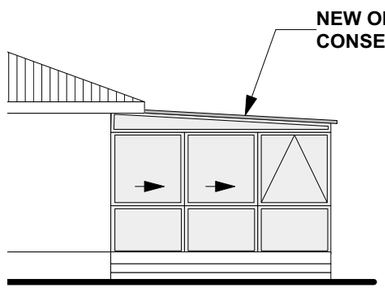

SOUTH W ELEVATION (1)
SCALE 1:100

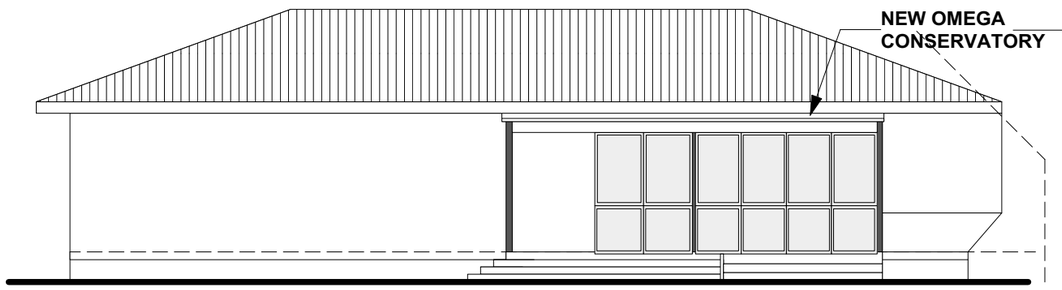

SOUTH E ELEVATION (2)
SCALE 1:100

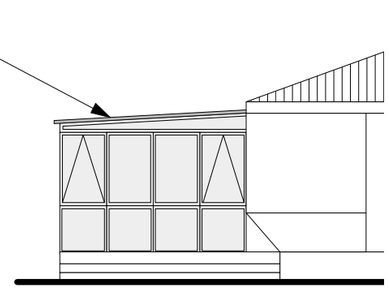

NORTH E ELEVATION (3)
SCALE 1:100

ALL STRUCTURAL TIMBER TO BE MSG/VSG8 UNLESS OTHERWISE NOTED
ALL WORK TO COMPLY WITH NZS 3604
CONTRACTOR TO VERIFY ALL DIMENSIONS ON SITE

WHERE PLANS ARE USED FOR CONSTRUCTION WITHOUT A CONTRACT FOR DIRECT CONSTRUCTION SUPERVISION BY PAUL MCKENNA ARCHITECTURE (PMA), PMA CAN NOT ACCEPT RESPONSIBILITY FOR ANY ISSUES WHICH MAY ARISE DURING OR AFTER THE CONSTRUCTION OF PROJECT DETAILED IN THESE DRAWINGS.
THIS PLAN IS COPYRIGHT OF PAUL MCKENNA ARCHITECTURE 2009. ALL RIGHTS RESERVED. IT MAY ONLY BE USED FOR CONSTRUCTION BY THE CLIENT NAMED AND MUST NOT BE REPRODUCED WITHOUT PERMISSION OF PAUL MCKENNA ARCHITECTURE
THIS PLAN AND ALL COPIES MADE OF THIS PLAN REMAIN THE PROPERTY OF PAUL McKENNA ARCHITECTURAL DESIGN

ISSUE	DATE	REVISION		
PROJECT	CONSERVATORY 12 DOWNES AVE	01	PROJECT #	21021
CLIENT	OMEGA JOINERY		SCALE	DWG #
DWG	PLANS & ELEVATIONS		DATE 15/10/21	REVISION

Paul McKenna Architecture
3 BUXTON RD, WANGANUI, NEW ZEALAND
T: (06)3444 729 F: (06) 344 7269
E: paulmck@ihug.co.nz

RECEIVED 1/12/2021

Bcon21/0800 - WDC Approved Plans - 15/12/2021

RECEIVED 1/12/2021

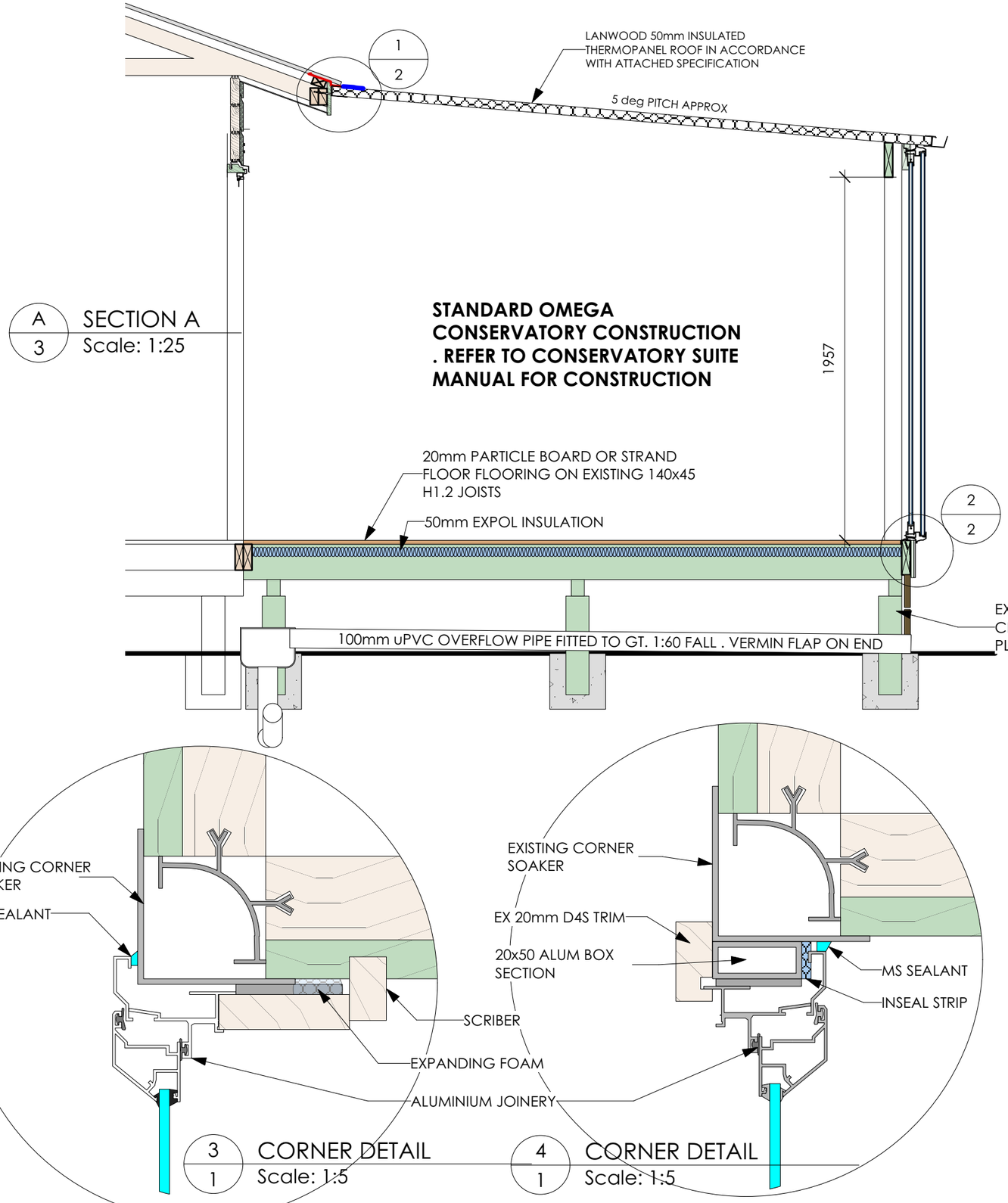

A 3 SECTION A
Scale: 1:25

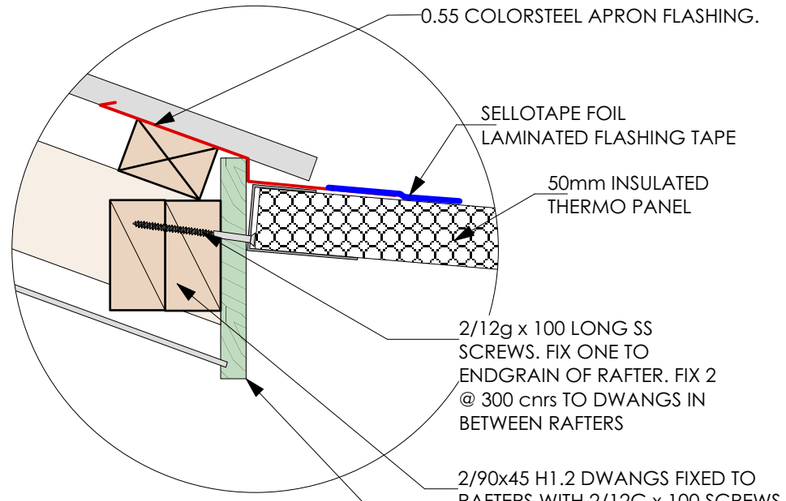

1 2 APRON DETAIL
Scale: 1:5

3 1 CORNER DETAIL
Scale: 1:5

4 1 CORNER DETAIL
Scale: 1:5

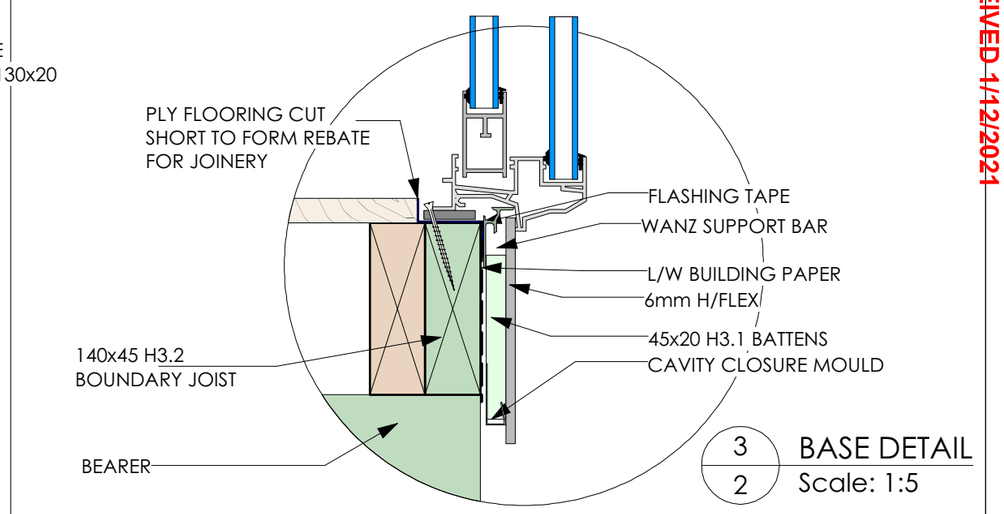

3 2 BASE DETAIL
Scale: 1:5

WHERE PLANS ARE USED FOR CONSTRUCTION WITHOUT A CONTRACT FOR DIRECT CONSTRUCTION SUPERVISION BY PAUL MCKENNA ARCHITECTURE (PMA), PMA CAN NOT ACCEPT RESPONSIBILITY FOR ANY ISSUES WHICH MAY ARISE DURING OR AFTER THE CONSTRUCTION OF PROJECT DETAILED IN THESE DRAWINGS.
THIS PLAN IS COPYRIGHT OF PAUL MCKENNA ARCHITECTURE 2009. ALL RIGHTS RESERVED. IT MAY ONLY BE USED FOR CONSTRUCTION BY THE CLIENT NAMED AND MUST NOT BE REPRODUCED WITHOUT PERMISSION OF PAUL MCKENNA ARCHITECTURE
THIS PLAN AND ALL COPIES MADE OF THIS PLAN REMAIN THE PROPERTY OF PAUL McKENNA ARCHITECTURAL DESIGN

ISSUE	DATE	REVISION	
PROJECT	CONSERVATORY 12 DOWNES AVE		PROJECT # 21021
CLIENT	OMEGA JOINERY	SCALE	DWG # 02
DWG	SECTIONS & DETAILS	DATE 15/10/21	REVISION

Paul McKenna Architecture
3 BUXTON RD, WANGANUI, NEW ZEALAND
T: (06)3444 729 F: (06) 344 7269
E: paulmck@ihug.co.nz

Bcon21/0800 - WDC Approved Plans - 15/12/2021

REDJACKET

File Ref: PS1-4630-1

PRODUCER STATEMENT – PS1 – DESIGN

(Guidance notes on the use of this form are printed on page 2)

ISSUED BY: RED JACKET LIMITED – CONSULTING ENGINEERS – NEW PLYMOUTH
(Design Firm)

TO: TREVOR AND TRISH WILLIAMS
(Owner/Developer)

TO BE SUPPLIED TO: WHANGANUI DISTRICT COUNCIL
(Building Consent Authority)

IN RESPECT OF: Proprietary Omega conservatory addition to the existing residential building.
(Description of Building Work)

AT: 12 DOWNES AVENUE, WHANGANUI
(Address)

LOT 17 **DP** 58510 **SO**

We have been engaged by the owner/developer referred to above to provide STRUCTURAL DESIGN.
(Extent of Engagement)

services in respect of the requirements of Clause(s) B1 of the Building Code for

~~All ☐ or~~ Part only ☒ (as specified on or in the attachment to this Statement), of the proposed building work.

The design carried out by us has been prepared in accordance with:

☒ Compliance Documents issued by the Ministry of Business, Innovation & Employment B1/VM1 or
(Verification Method / Acceptable Solution)

~~☐ Alternative solution as per the attached schedule~~

The proposed building work covered by this Producer Statement is described on the drawings titled and numbered PAUL MCKENNA ARCHITECTURE #19042 & RED JACKET CALCULATIONS CAL-4630-01-A together with the specification, and other documents set out in the schedule attached to this statement.

On behalf of the Design Firm, and subject to:

(i) Site verification of the following design assumptions THE EXISTING STRUCTURE AS DESIGNED BY OTHERS HAS THE CAPACITY TO SUPPORT THE CONSERVATORY LOADS

(ii) All proprietary products meeting their performance specification requirements;

I believe on reasonable grounds that:

a) the building, if constructed in accordance with the drawings, specifications, and other documents provided or listed in the attached schedule, will comply with the relevant provisions of the Building Code, and that

b), the persons who have undertaken the design have the necessary competency to do so.

~~I recommend the following level of construction monitoring/observation: ☐CM1 ☐CM2 ☐CM3 ☐CM4 ☐CM5 (Engineering Categories)~~

I, ANDREW D L FRASER, am a Member of IPENZ and hold the qualifications shown on the engineers stamp below.
The Design Firm issuing this statement holds a current policy of Professional Indemnity Insurance for no less than $200,000*.

SIGNED BY: ANDREW D L FRASER ON BEHALF OF RED JACKET LIMITED (Design Firm)

CHARTERED CIVIL STRUCTURAL ENGINEER
ADL FRASER
CMEngNZ
No. 96197

Date: 22/09/2021 Signature)

Note: This statement shall only be relied upon by the Building Consent Authority named above. Liability under this statement accrues to the Design Firm only. The total maximum amount of damages payable arising from this statement and all other statements provided to the Building Consent Authority in relation to this building work, whether in contract, tort or otherwise (including negligence), is limited to the sum of $200,000.*

This form is to accompany **Form 2 of the Building (Forms) Regulations 2004** for the application of a Building Consent.

RECEIVED 1/12/2021

Building Consent Approved Plans - 15/12/2021

Scope of Work

Structural Design for the Proprietary OMEGA Conservatory addition to the existing Residential Building

Basis of Design

Conservatory to be braced by existing House Structure and glass panels on front wall.
Negligible increase in lateral load in across direction as conservatory does not extend beyond the building outline.
Check bracing in along direction
Check conservatory for uplift and face loads.

AS/NZS 1170	Loading Standard
NZS 3603	Timber Structures
AS/NZS 1664	Aluminium Structures
NZS 3604	Timber Framed Buildings

Assumptions

The house and conservatory foundation and supporting structure as designed by others has the capacity to withstand the loads from the conservatory.

Dimensions

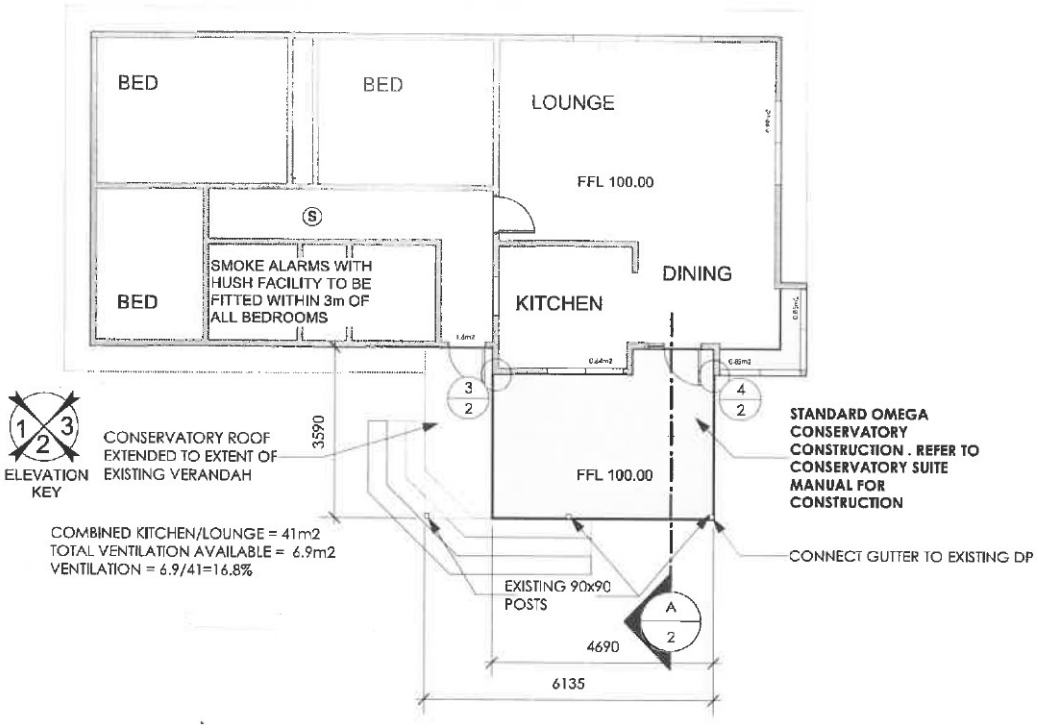

$H_{wall} := 2\ m$ $L_{end} := 3.0\ m$ $L_{front} := 4.7\ m$ Rafter Spacings $S_{rafter} := 1\ m$ (Polypanel)

Front Mullion Spacing $S_{fmullion} := 0.8\ m$ Side Mullion Spacing $S_{emullion} := 1\ m$

RECEIVED 1/12/2021

Council Approved Plans - 15/12/2021

WIND LOADS

Shape Coefficients

$C_{figU} := -1$ $C_{figW} := 1.2$

Wind Pressure

$P_u := 1.16$ **kPa**

$P_s := 0.76$ **kPa**

Wall Pressure

$W_{uWALL} := P_u \cdot C_{figW}$ $W_{uWALL} = 1.39$ **kPa**

$W_{uROOF} := P_u \cdot C_{figU}$ $W_{uROOF} = -1.16$ **kPa**

Bracing Demands

$V_{ALONG} := 0.5 \cdot W_{uWALL} \cdot L_{end} \cdot 0.5 \cdot H_{wall}$ $V_{ALONG} = 2.09$ **kN**

$V_{ACROSS} := 0.5 \cdot W_{uWALL} \cdot L_{front} \cdot H_{wall}$ $V_{ACROSS} = 6.54$ **kN**

Ignore as outline is within existing building lines

$\frac{V_{ALONG}}{No_{PANELS}}$



$H_{wall} := 2.0$ **m**

N_T

$No_{PANELS} := 6$ $WIDTH_{PANELS} := 0.8$ **m**

$N_T := \frac{V_{ALONG}}{No_{PANELS}} \cdot \frac{H_{wall}}{WIDTH_{PANELS}}$ $N_T = 0.87$ **kN**

Joint Demands

End Wall Fixings

End Wall to Building $V_{evert} := 0.5 \cdot S_{emullion} \cdot W_{uWALL}$ $V_{evert} = 0.7 \frac{\text{kN}}{\text{m}}$

End Wall to Roof & End Wall to Floor $V_{ehoriz} := 0.5 \cdot H_{wall} \cdot W_{uWALL}$ $V_{ehoriz} = 1.39 \frac{\text{kN}}{\text{m}}$

Front Wall Fixings

Corner Mullion $V_{fvert} := 0.5 \cdot S_{fmullion} \cdot W_{uWALL}$ $V_{fvert} = 0.56 \frac{\text{kN}}{\text{m}}$

Roof to Front Wall & Front Wall to Floor $V_{fhoriz} := 0.5 \cdot H_{wall} \cdot W_{uWALL}$ $V_{fhoriz} = 1.39 \frac{\text{kN}}{\text{m}}$

$N_{fhoriz} := 0.5 \cdot L_{end} \cdot W_{uROOF}$ $N_{fhoriz} = -1.74 \frac{\text{kN}}{\text{m}}$

RECEIVED 1/12/2021

Boundary Approved Plans - 15/12/2021

SUMMARY

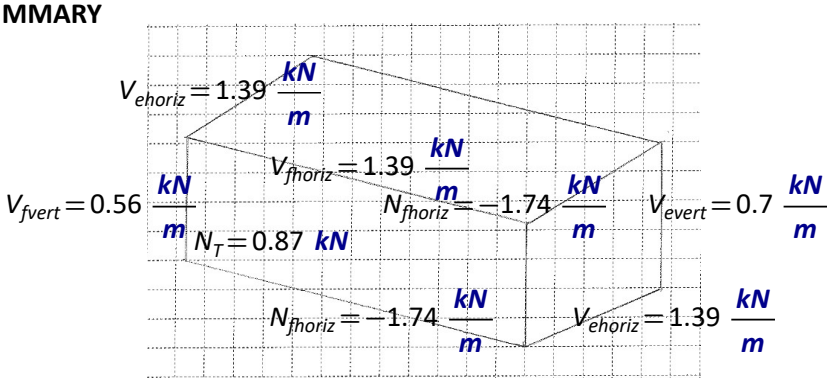

Refer attached connection calculations for capacities and fixing requirements

RECEIVED 1/12/2021

Bcon21/0800 - WDC Approved Plans 15/12/2021

2/12G x 100 mm long SS Screw at 400 mm crs to be used as specified by the fabricator.
Base strength on 60 mm embedment
ΦVn = 7.5 kN/m > V*max 1.74 kN/m OK
ΦNt = 15*0.5 = 7.5 kN/m > N*t max 1.39 kN/m OK
A 0.5 factor applied to tension to account for the end grain pullout

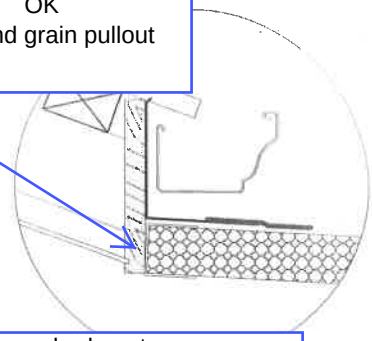

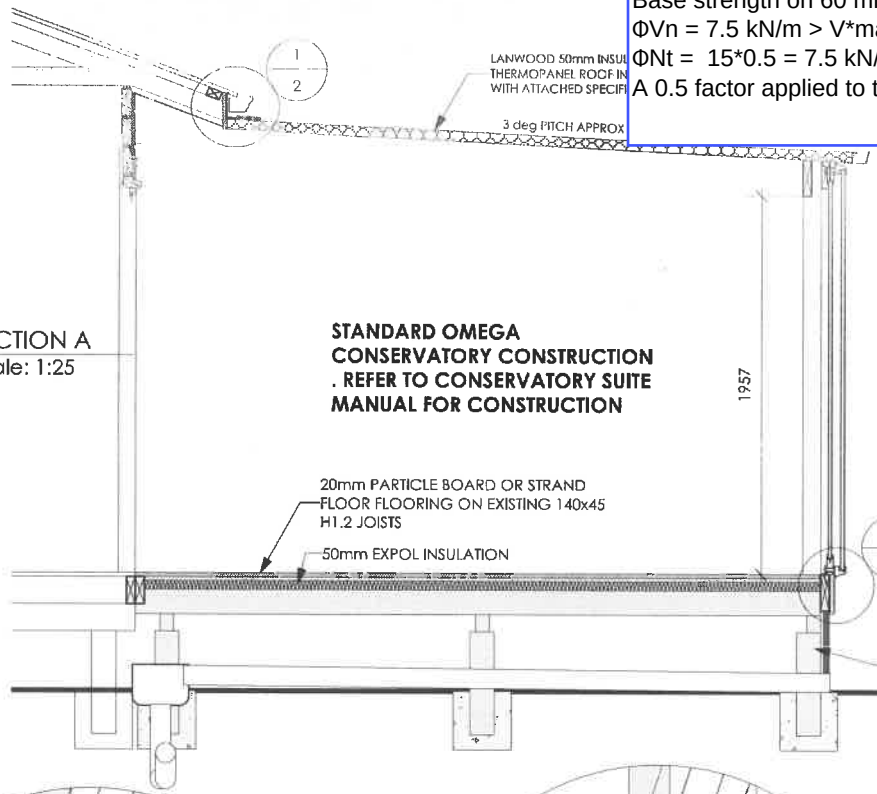

A/3 SECTION A
Scale: 1:25

STANDARD OMEGA CONSERVATORY CONSTRUCTION . REFER TO CONSERVATORY SUITE MANUAL FOR CONSTRUCTION

10G SS Screw 60mm min embedment.
600 mm CRS
ΦVn = 2.0 kN/m > V*max 1.4 kN/m OK
ΦNt per screw = 2.6 kN > N*t max 0.87 kN OK

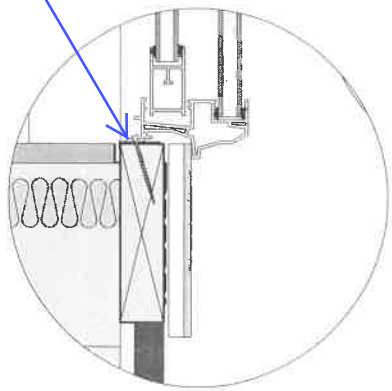

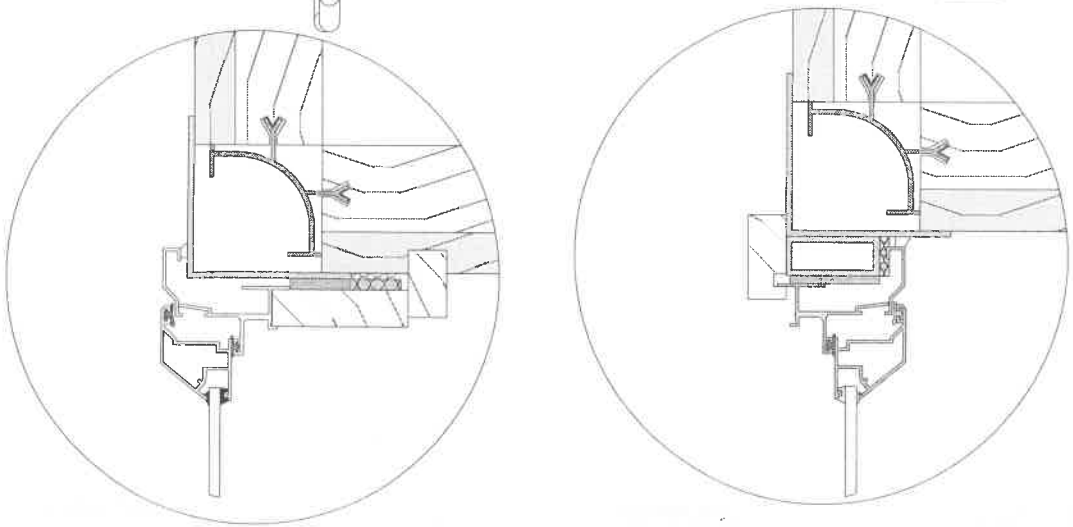

WHERE PLANS ARE USED FOR CONSTRUCTION WITHOUT A CONTRACT FOR DIRECT CONSTRUCTION SUPERVISION BY PAUL MCKENNA ARCHITECTURE (PMA), PMA CAN NOT ACCEPT RESPONSIBILITY FOR ANY ISSUES WHICH MAY ARISE DURING OR AFTER THE CONSTRUCTION OF PROJECT DETAILED IN THESE DRAWINGS.
THIS PLAN IS COPYRIGHT OF PAUL MCKENNA ARCHITECTURE 2009. ALL RIGHTS RESERVED. IT MAY ONLY BE USED FOR CONSTRUCTION BY THE CLIENT NAMED AND MUST NOT BE REPRODUCED WITHOUT PERMISSION OF PAUL MCKENNA ARCHITECTURE
THIS PLAN AND ALL COPIES MADE OF THIS PLAN REMAIN THE PROPERTY OF PAUL MCKENNA ARCHITECTURAL DESIGN

ISSUE	DATE	REVISION
PROJECT	CONSERVATORY	PROJECT # 19042
CLIENT	OMEGA JOINERY	SCALE / DWG # 02
DWG	SECTIONS & DETAILS	DATE 15/10/19 / REVISION

Paul McKenna Architecture
3 BUXTON RD, WANGANUI, NEW ZEALAND
T: (06)3444 729 F: (06) 344 7269
E: paulmck@ihug.co.nz

RECEIVED 1/12/2021

OMEGA
WINDOWS + DOORS

OMEGA CONSERVATORY PS1 REQUEST FORM

Date: 09/07/2021

Fabricator: River City Aluminium Phone: 027 462 9467

Address: 5 WILSON STREET, Whanganui WILLIAMS

Client: TREVOR & TRISH WILSON Phone: (06) 348-7226 / 027 293 3520

Address: 12 DOWNS AVE, WHANGANUI

LOT: 17 DP: 58310 SO:

Regional Building Consent Authority: Whanganui district council.

To Compliance Documents:- VM1/B1 Clauses:- B1 and B2 required

I. WIND ZONE :

☐ Site Has **No Site Specific Wind Pressures** Determined By Designers (Pressures As Specified In NZS 4211 : 2008)

☐ LOW (510 Pa SWP, 720 Pa UWP) ☐ MEDIUM (680 Pa SWP, 960 Pa UWP)

☑ HIGH (970 Pa SWP, 1360 Pa UWP) ☐ VERY HIGH (1250 Pa SWP, 1760 Pa UWP)

☐ EXTRA HIGH (1515 Pa SWP, 2130 Pa UWP)

Wind zone shall be determined through procedure outlined in section 5 of NZS 3604 : 2011 A1 : Timber Framed Buildings

☐ Site **Has Site Specific Wind Pressures** Determined By Designers:

II. MULLION TYPE (Please Refer To Mullion Spacing & Span Tables For Span Compliance) :

Section : XS03 Load Spacing : 725 Span: 2400

III. ROOF TYPE :

☐ Aluminium Roof Bars (Please Refer To Rafter Spacing & Span Tables For Span Compliance) :

Section : Load Spacing : Span:

☑ Insulated Thermo Panels (For Equibond Product Refer To Equibond Ultimate Limit State Span Tables For Compliance) :

Product : poly dome Thickness : 50mm Length : 3600mm

IV. GLAZING :

☑ All Window Glazing To Comply With : NZS 4223 : Part 3 : 2016 : Glazing In Buildings – Human Impact Safety Requirements

☐ All Roof Glazing To Comply With : NZS 4223 : Part 4 : 2008 : Glazing In Buildings – Wind, Dead, Snow & Live Actions

V. FOUNDATION TYPE :

Concrete Slab ☑ Timber Framing ☐ Other :

☐ All Foundations To Comply With : NZS 3604 : 2011 A1 : Timber Framed Buildings

VI. ATTACH DETAILED DRAWINGS OF PROPOSED CONSERVATORY :

Please **NOTE** detailed drawings and the information above is required before a PS1 can be issued.

36 Perate Road, Bell Block
Private Bag 2007, New Plymouth
New Zealand

P: 0800 800 141
F: 0800 800 161
www.omegawindows.co.nz

McKechnie

RECEIVED 1/12/2021

Bcon21/0800 - WDC Approved Plans - 15/12/2021

Rivercity Building & Aluminium

Sales Contact:-Rahul Gujral
Phone:-06 348 7063
Email:-admin@rivercityaluminium.co.nz
Mobile:-027 462 9467

ALUMINIUM EXTRUSIONS SUPPLIED BY :

OMEGA WINDOWS + DOORS BY MCKECHNIE

CUSTOMER	QUOTE INFORMATION	SITE ADDRESS
12 Downs Ave 348 7226 or 027 293 3520 Whanganui	**QUOTE NO:**2987 - 4 **QUOTE DATE:** 3/5/2021 **Title:-** WOON Conservatory ALL UNITS SHOWN WITH BOX SIZES AND VIEWED FROM OUTSIDE.	

Item:- 1 - Glass Roof

Suite: Residential
Frame: 37858
Finish: Window Bronze Kinetic
Location: Std Residential
Wind Zone: Very High
H Flashing: Flashing75
S Flashing: Wanz55
Liners: Fin-19-65-A
W.Thickness:165mm

Glass:
6.38mm GREY LAMINATE

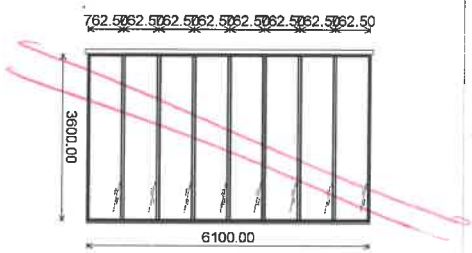

Frame:- 100Kg
Glass:- 296Kg
Total:- 396Kg

Dimensions:-
Ht:3600mm x Wd:6100mm

Quantity:- 1

Now Poly Panel

Item:- 2 - Entrance from drive way

Suite: Residential
Frame: 35804
Finish: Window Bronze Kinetic
Location: Isdomestic
Wind Zone: Very High
H Flashing: Flashing75
S Flashing: 35303
Liners: Fin-19-65-A
W.Thickness:165mm

Glass:
5mm Grey Float Tgh/5mm Float Tgh

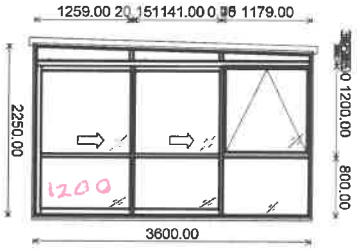

Frame:- 75Kg
Glass:- 164Kg
Total:- 239Kg

Dimensions:-
Ht:2250mm x Wd:3600mm

Quantity:- 1

Hardware
W-Handle-Edge3Helixseal-Black-Low Profile
D-Handle-Aria Surface-Black

Item:- 3 - Front facing french doors

Suite: Residential
Frame: Open Out
Finish: Window Bronze Kinetic
Location: Isdomestic
Wind Zone: Very High
H Flashing: Flashing75
S Flashing: 35303
Liners: Fin-19-65-A
W.Thickness:165mm

Glass:
5mm Grey Float Tgh/5mm Float Tgh

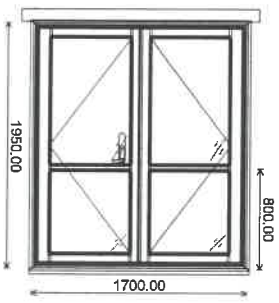

Frame:- 32Kg
Glass:- 54Kg
Total:- 86Kg

Dimensions:-
Ht:1950mm x Wd:1700mm

Quantity:- 1

Hardware
HD-Handle-Edge3

RECEIVED 1/12/2021

Bcon21/0800 - WDC Approved Plans - 15/12/2021

Item: 17	Freehand	Description: Comments:	Installation	Quantity:- 1
Item: 18	Freehand	Description: Comments:	Site measure	Quantity:- 1
Item: 19	Freehand	Description: Comments:	Delivery	Quantity:- 1

Quote Date: 3/5/2021
Item Range: 1-19
Total Units: 32
Est Gross Weight: 1092Kg

Sales Contact:-Rahul Gujral
Phone:-06 348 7063
Email:-admin@rivercityalumir
Mobile:-027 462 9467

QUOTE COMMENTS:

. I / WE ACCEPT THIS QUOTATION FOR ALUMINIUM JOINERY AS DETAILED ABOVE

. I/ WE AGREE THAT THE JOINERY IS SUPPLIED ON THE TERMS AND CONDITIONS OF SALE ATTACHED AND THAT THESE TERMS & CONDITIONS OF SALE WILL FORM THE BASIS OF THE CONTRACT FOR SUPPLY.

. I / WE AGREE TO PAY A DEPOSIT OF 50% OF THE VALUE OF THE QUOTE ON ACCEPTANCE, AND AGREE TO SETTLE THE ACCOUNT IN FULL ON DELIVERY OFTHE GOODS - OR BY PRIOR ARRANGEMENT.

Please Sign On Acceptance

Name:_____

Signed:_____

Date:_____

NOTE: ALL UNITS VIEWED FROM OUTSIDE THIS QUOTATION IS VALID FOR 30 DAYS FROM THE "QUOTE DATE" STATED ON THIS QUOTE

RECEIVED 1/12/2021

Bcon21/0800 - WDC Approved Plans - 15/12/2021

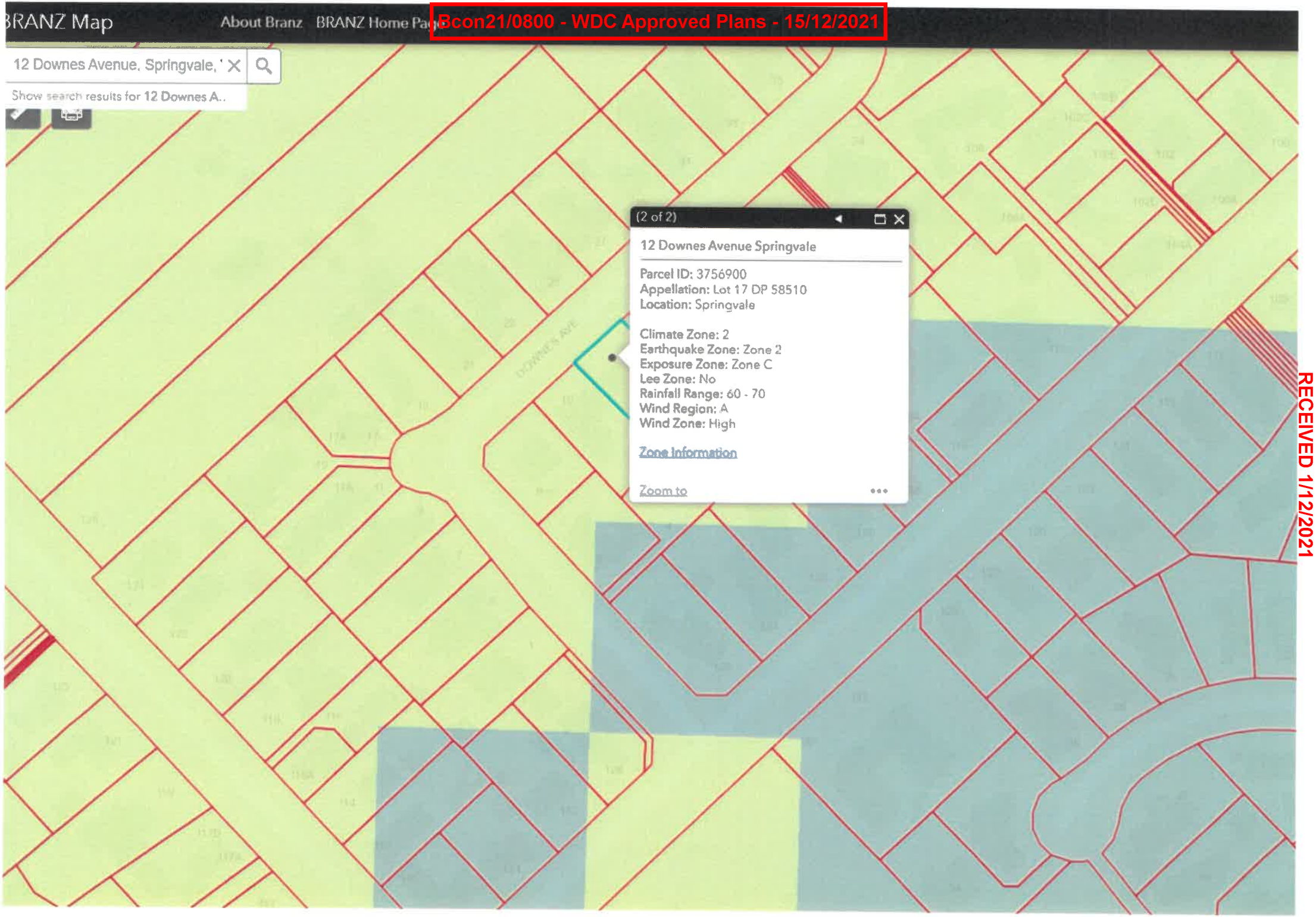

RECEIVED 1/12/2021

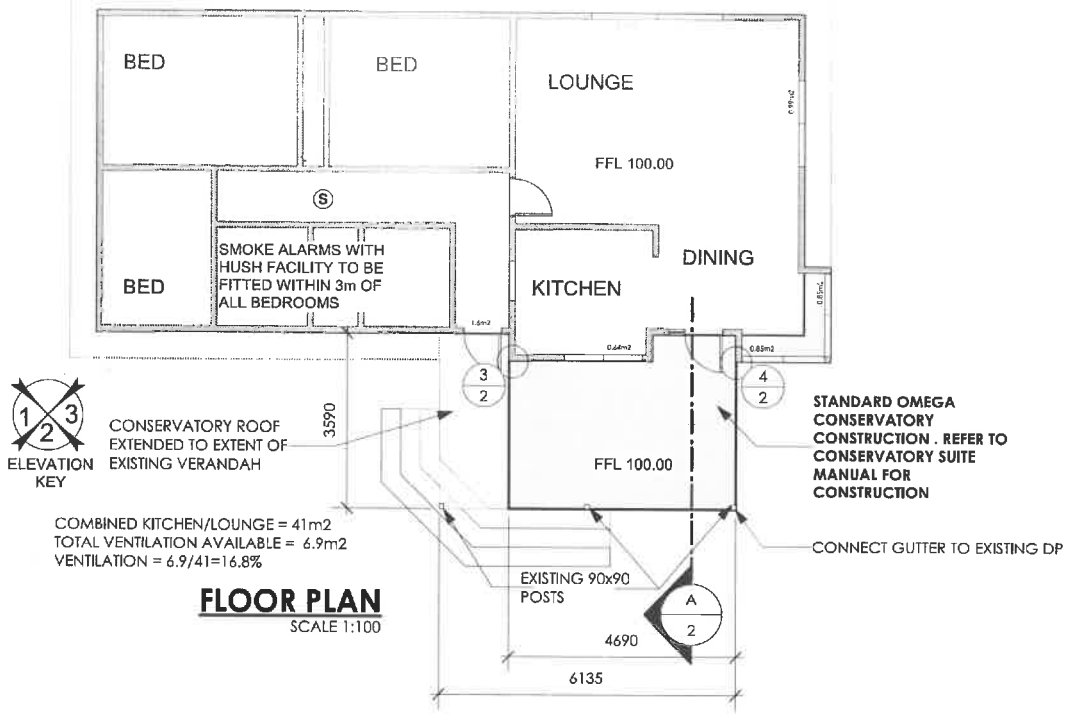

FLOOR PLAN
SCALE 1:100

DOWNES AVE

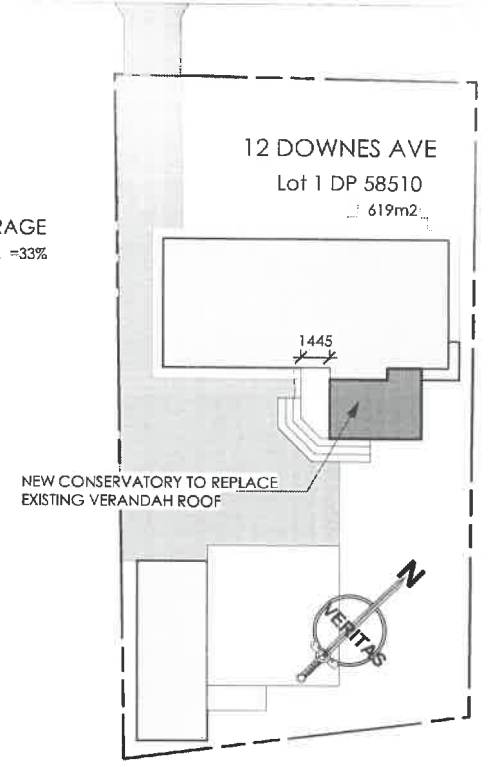

SITE COVERAGE
202m2 /619m2 =33%

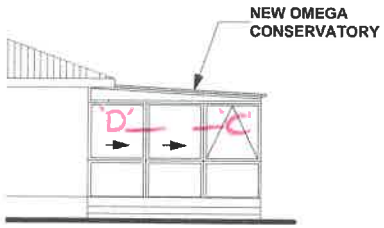

SOUTH W ELEVATION (1)
SCALE 1:100



SOUTH E ELEVATION (2)
SCALE 1:100

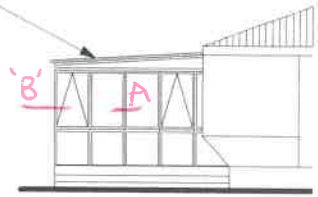

NORTH E ELEVATION (3)
SCALE 1:100

ALL STRUCTURAL TIMBER TO BE MSG/VSG8 UNLESS OTHERWISE NOTED
ALL WORK TO COMPLY WITH NZS 3604
CONTRACTOR TO VERIFY ALL DIMENSIONS ON SITE

WHERE PLANS ARE USED FOR CONSTRUCTION WITHOUT A CONTRACT FOR DIRECT CONSTRUCTION SUPERVISION BY PAUL MCKENNA ARCHITECTURE (PMA), PMA CAN NOT ACCEPT RESPONSIBILITY FOR ANY ISSUES WHICH MAY ARISE DURING OR AFTER THE CONSTRUCTION OF PROJECT DETAILED IN THESE DRAWINGS.
THIS PLAN IS COPYRIGHT OF PAUL MCKENNA ARCHITECTURE 2009. ALL RIGHTS RESERVED. IT MAY ONLY BE USED FOR CONSTRUCTION BY THE CLIENT NAMED AND MUST NOT BE REPRODUCED WITHOUT PERMISSION OF PAUL MCKENNA ARCHITECTURE
THIS PLAN AND ALL COPIES MADE OF THIS PLAN REMAIN THE PROPERTY OF PAUL MCKENNA ARCHITECTURAL DESIGN

ISSUE	DATE	REVISION
PROJECT	CONSERVATORY	01
CLIENT	OMEGA JOINERY	
DWG	PLANS & ELEVATIONS	15/10/19

PROJECT # 19042
SCALE
DWG #
DATE
REVISION

Paul McKenna Architecture
3 BUXTON RD, WANGANUI, NEW ZEALAND
T: (06)3444 729 P: (06) 344 7269
E: paulmck@ihug.co.nz

RECEIVED 1/12/2021

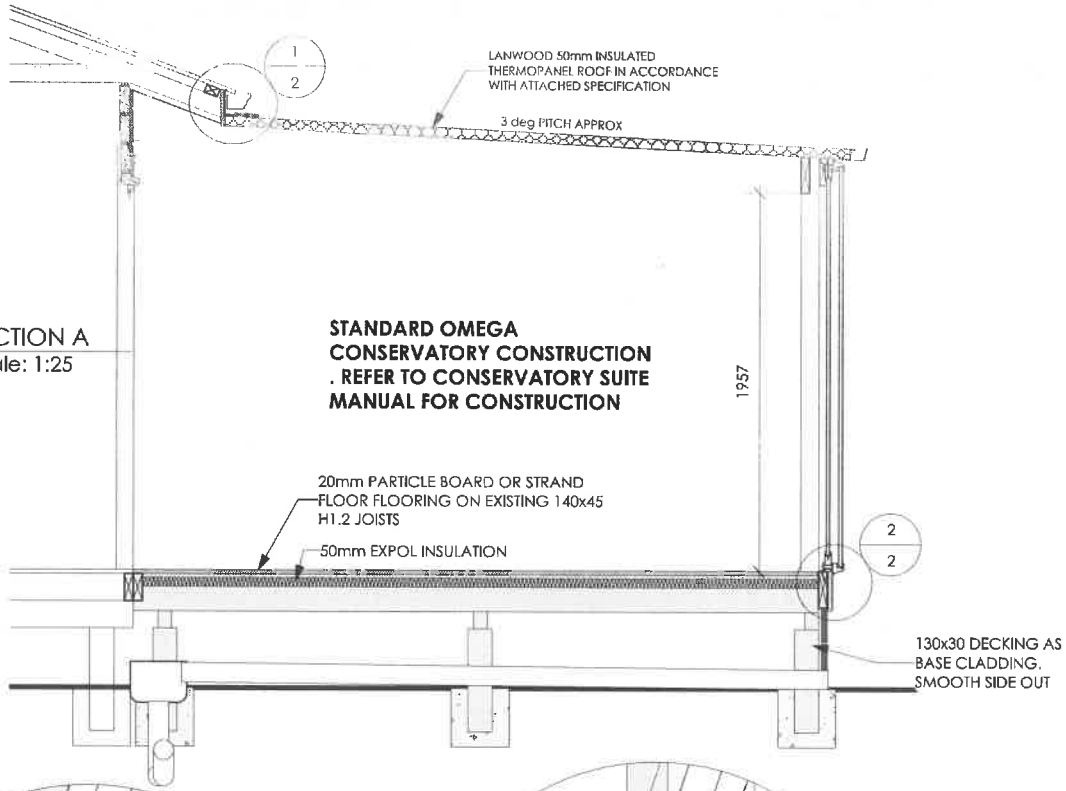

A/3 SECTION A
Scale: 1:25

STANDARD OMEGA CONSERVATORY CONSTRUCTION . REFER TO CONSERVATORY SUITE MANUAL FOR CONSTRUCTION

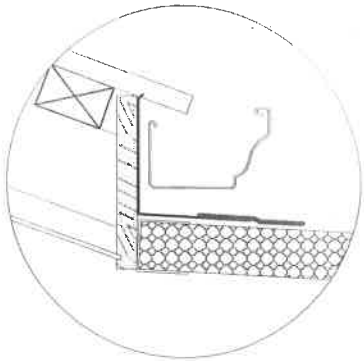

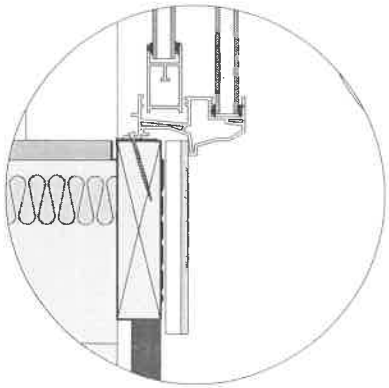

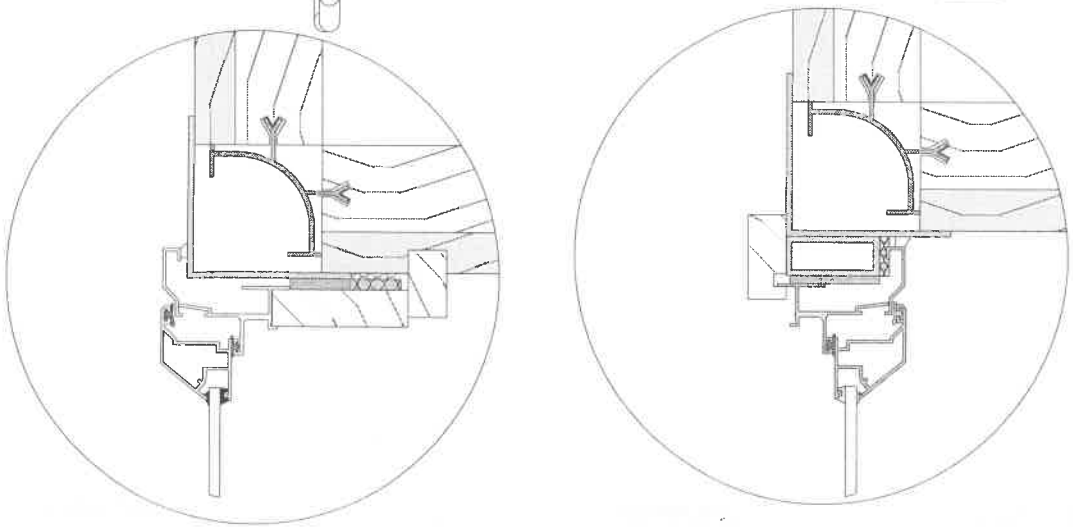

WHERE PLANS ARE USED FOR CONSTRUCTION WITHOUT A CONTRACT FOR DIRECT CONSTRUCTION SUPERVISION BY PAUL MCKENNA ARCHITECTURE (PMA), PMA CAN NOT ACCEPT RESPONSIBILITY FOR ANY ISSUES WHICH MAY ARISE DURING OR AFTER THE CONSTRUCTION OF PROJECT DETAILED IN THESE DRAWINGS.
THIS PLAN IS COPYRIGHT OF PAUL MCKENNA ARCHITECTURE 2009. ALL RIGHTS RESERVED. IT MAY ONLY BE USED FOR CONSTRUCTION BY THE CLIENT NAMED AND MUST NOT BE REPRODUCED WITHOUT PERMISSION OF PAUL MCKENNA ARCHITECTURE
THIS PLAN AND ALL COPIES MADE OF THIS PLAN REMAIN THE PROPERTY OF PAUL MCKENNA ARCHITECTURAL DESIGN

ISSUE	DATE	REVISION	
PROJECT	CONSERVATORY		PROJECT # 19042
CLIENT	OMEGA JOINERY	SCALE	DWG # 02
DWG	SECTIONS & DETAILS	DATE 15/10/19	REVISION

Paul McKenna Architecture
3 BUXTON RD, WANGANUI, NEW ZEALAND
T: (06)3444 729 F: (06) 344 7269
E: paulmck@ihug.co.nz

RECEIVED 1/12/2021

Bcon21/0800 - WDC Approved Plans - 15/12/2021

WILLIAMS' CONSERVATORY

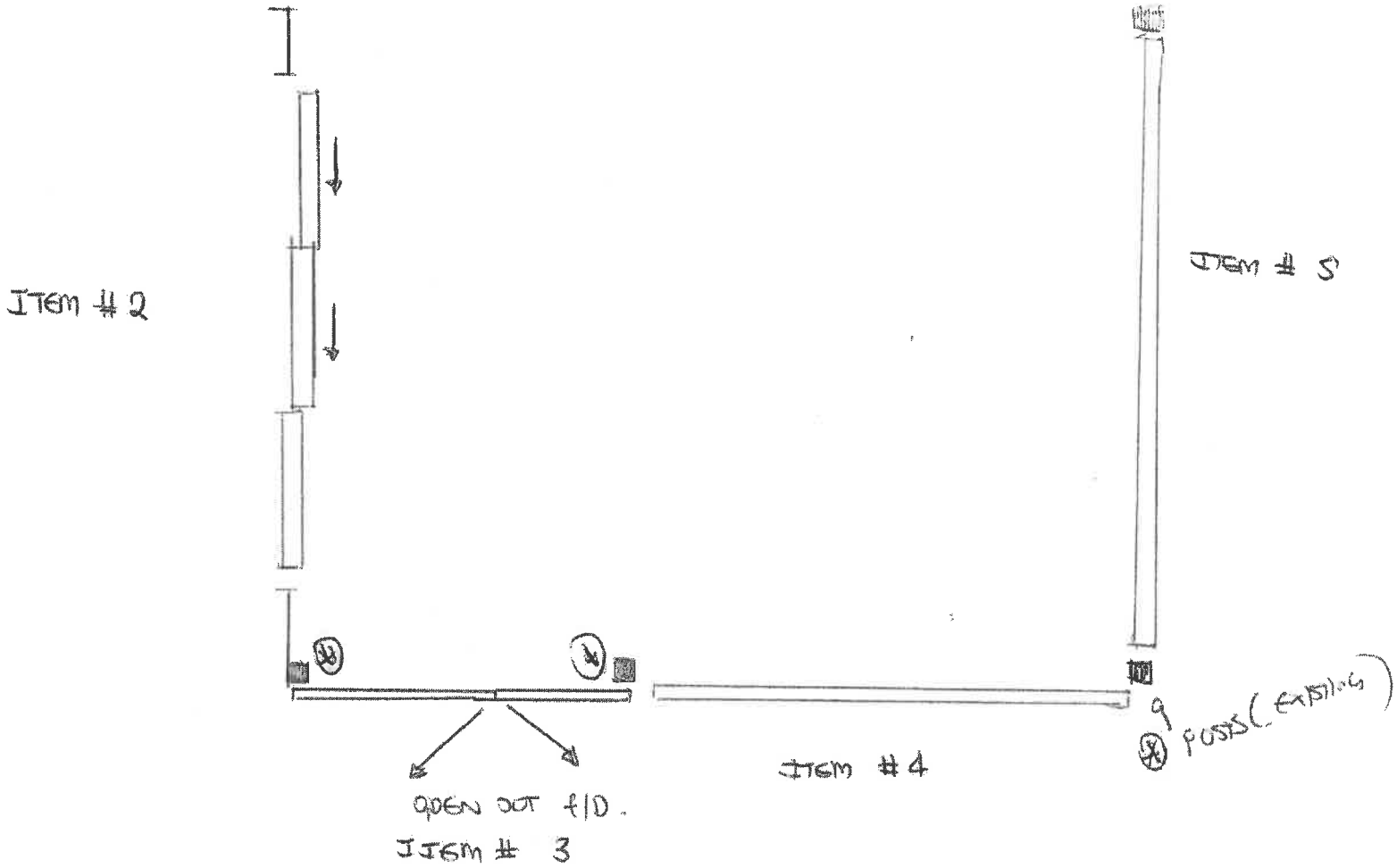

RECEIVED 1/12/2021

Bcon21/0800 - WDC Approved Plans - 15/12/2021

OMEGA® WINDOWS + DOORS
BY MCKECHNIE®

DESIGN OF ALUMINIUM MULLIONS (6060T5) - UNIFORMLY DISTRIBUTED LOAD.

MULLION SPACING AND SPAN CALCULATIONS ARE TO THE CURRENT NZS 4211 : 2008

TABLE : NZS 4211 : 2008. ULTIMATE & SERVICEABILITY LIMIT STATE WIND ZONE TEST PRESSURES									
	LOW		MEDIUM		HIGH		VERY HIGH		EXTRA HIGH	
ULTIMATE WIND PRESSURE	720	Pa	960	Pa	1360	Pa	1760	Pa	2130	Pa
SERVICEABILITY WIND PRESSURE	510	Pa	680	Pa	970	Pa	1250	Pa	1515	Pa

DATE :	8/09/2021	**AMENDMENT :**	
FABRICATOR :	RiverCity Building & Aluminium		
PROJECT :	Conservatory @ 12 Downes Avenue, Whanganui		
WIND ZONE :	NZS 4211 WIND ZONE HIGH	**ULTIMATE :** / **SERVICEABILITY :**	1360 Pa / 970 Pa
UNIT / TYPE(S) :	Window Mullion (Detail 'A')		

SECTION(S) :

X503

SECTION PROPERTIES :

DEPTH OF SECTION	=	84.00	mm
WIDTH OF SECTION	=	65.00	mm
DISTANCE TO C of GRAVITY ("Y" mm)	=	30.43	mm
DISTANCE TO C of GRAVITY ("X" mm)	=	32.58	mm

SECTION PROFILE (NOT TO SCALE) :

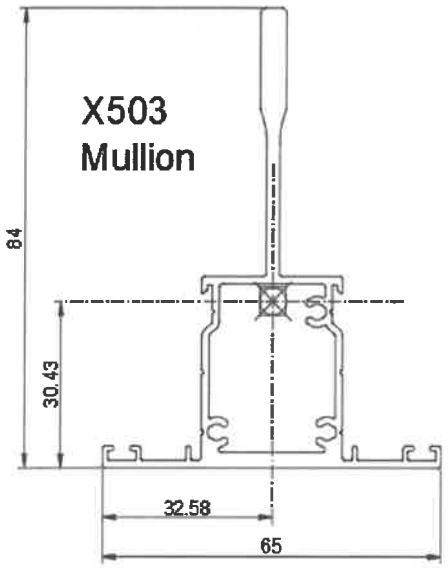

MULLION SPACING AND SPAN CALCULATION :

ULTIMATE WIND PRESSURE	=	1360	Pa
SERVICEABILITY WIND PRESSURE	=	970	Pa
MULLION SPAN	=	2.000	m
MULLION SPACING	=	0.725	m
MOMENT OF INERTIA ("Ixx")	=	382995	mm^4
DEPTH OF SECTION	=	84.00	mm
DISTANCE TO C of GRAVITY ("Y" mm)	=	30.43	mm
SECTION MODULUS 1	=	12586	mm^3
SECTION MODULUS 2	=	7149	mm^3
MINIMUM SECTION MODULUS	=	7149	mm^3
j_Y	=	0.95	
j_u	=	0.85	
F_{ty}	=	110	MPa
F_{tu}	=	150	MPa
k_t	=	1.0	
DESIGN BENDING MOMENT	=	0.49	kNm
BENDING STRENGTH 1	=	0.75	kNm
BENDING STRENGTH 2	=	0.91	kNm
MINIMUM BENDING STRENGTH	=	0.75	kNm
PASSED or FAILED	=	**PASSED**	
DEFLECTION	=	5.5	mm
SPAN / DEFLECTION	=	361	
PASSED or FAILED	=	**PASSED**	

36 Paraite Road, Bell Block
Private Bag 2007, New Plymouth
New Zealand

Ph: 0800 500 141
Fax: 0800 500 161
www.omegawindows.co.nz

McKechnie Transforming Aluminium

RECEIVED 1/12/2021

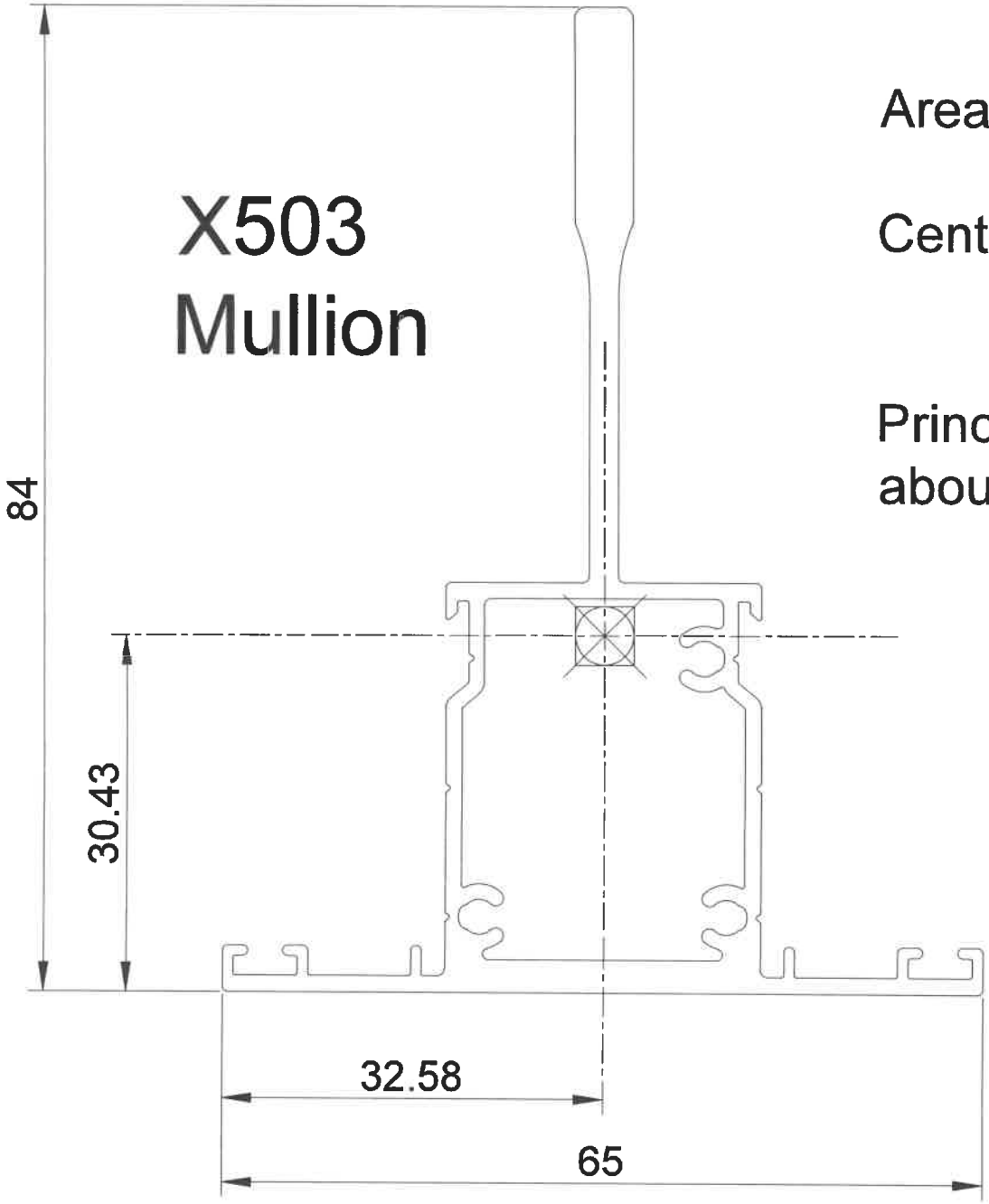

Area: 480.07 mm²

Centroid: X: 32.57 mm
Y: 30.43 mm

Principal moments and X-Y directions about centroid:

Ixx: 382994.54
Iyy: 66102.72

Detail @ 'A'

RECEIVED 1/12/2021

Bcon21/0800 - WDC Approved Plans - 15/12/2021

OMEGA® WINDOWS + DOORS
BY MCKECHNIE®

DESIGN OF ALUMINIUM MULLIONS (6060T5) - UNIFORMLY DISTRIBUTED LOAD.

MULLION SPACING AND SPAN CALCULATIONS ARE TO THE CURRENT NZS 4211 : 2008

TABLE : NZS 4211 : 2008. ULTIMATE & SERVICEABILITY LIMIT STATE WIND ZONE TEST PRESSURES									
	LOW		MEDIUM		HIGH		VERY HIGH		EXTRA HIGH	
ULTIMATE WIND PRESSURE	720	Pa	960	Pa	1360	Pa	1760	Pa	2130	Pa
SERVICEABILITY WIND PRESSURE	510	Pa	680	Pa	970	Pa	1250	Pa	1515	Pa

DATE :	8/09/2021	**AMENDMENT :**	
FABRICATOR :	RiverCity Building & Aluminium		
PROJECT :	Conservatory @ 12 Downes Avenue, Whanganui		
WIND ZONE :	NZS 4211 WIND ZONE HIGH	**ULTIMATE :** / **SERVICEABILITY :**	1360 Pa / 970 Pa
UNIT / TYPE(S) :	Corner Post (Detail 'B')		

SECTION(S) :

Z320 / 37858

SECTION PROPERTIES :

DEPTH OF SECTION	=	142.00	mm
WIDTH OF SECTION	=	142.00	mm
DISTANCE TO C of GRAVITY ("Y" mm)	=	62.42	mm
DISTANCE TO C of GRAVITY ("X" mm)	=	62.42	mm

SECTION PROFILE (NOT TO SCALE) :

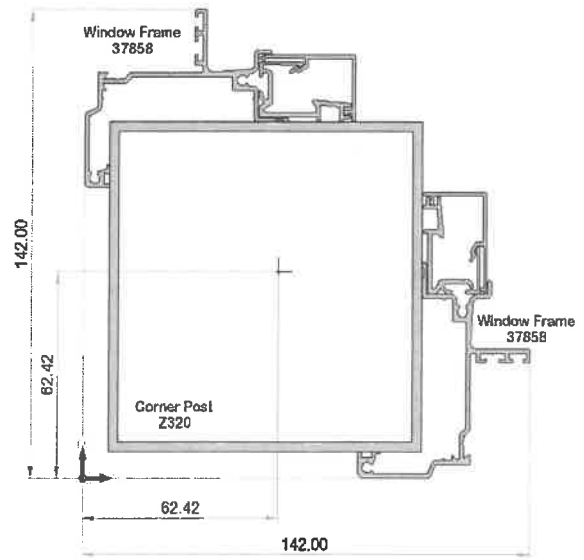

MULLION SPACING AND SPAN CALCULATION :

ULTIMATE WIND PRESSURE	=	1360	Pa
SERVICEABILITY WIND PRESSURE	=	970	Pa
MULLION SPAN	=	2.000	m
MULLION SPACING	=	1.200	m
MOMENT OF INERTIA ("Ixx")	=	2997557	mm^4
DEPTH OF SECTION	=	142.00	mm
DISTANCE TO C of GRAVITY ("Y" mm)	=	62.42	mm
SECTION MODULUS 1	=	48022	mm^3
SECTION MODULUS 2	=	37667	mm^3
MINIMUM SECTION MODULUS	=	37667	mm^3
j_Y	=	0.95	
j_u	=	0.85	
F_{ty}	=	110	MPa
F_{tu}	=	150	MPa
k_t	=	1.0	
DESIGN BENDING MOMENT	=	0.82	kNm
BENDING STRENGTH 1	=	3.94	kNm
BENDING STRENGTH 2	=	4.80	kNm
MINIMUM BENDING STRENGTH	=	3.94	kNm
PASSED or FAILED	=	**PASSED**	
DEFLECTION	=	1.2	mm
SPAN / DEFLECTION	=	1706	
PASSED or FAILED	=	**PASSED**	

36 Paraite Road, Bell Block
Private Bag 2007, New Plymouth
New Zealand

Ph: 0800 500 141
Fax: 0800 500 161
www.omegawindows.co.nz

McKechnie Transforming Aluminium

RECEIVED 1/12/2021

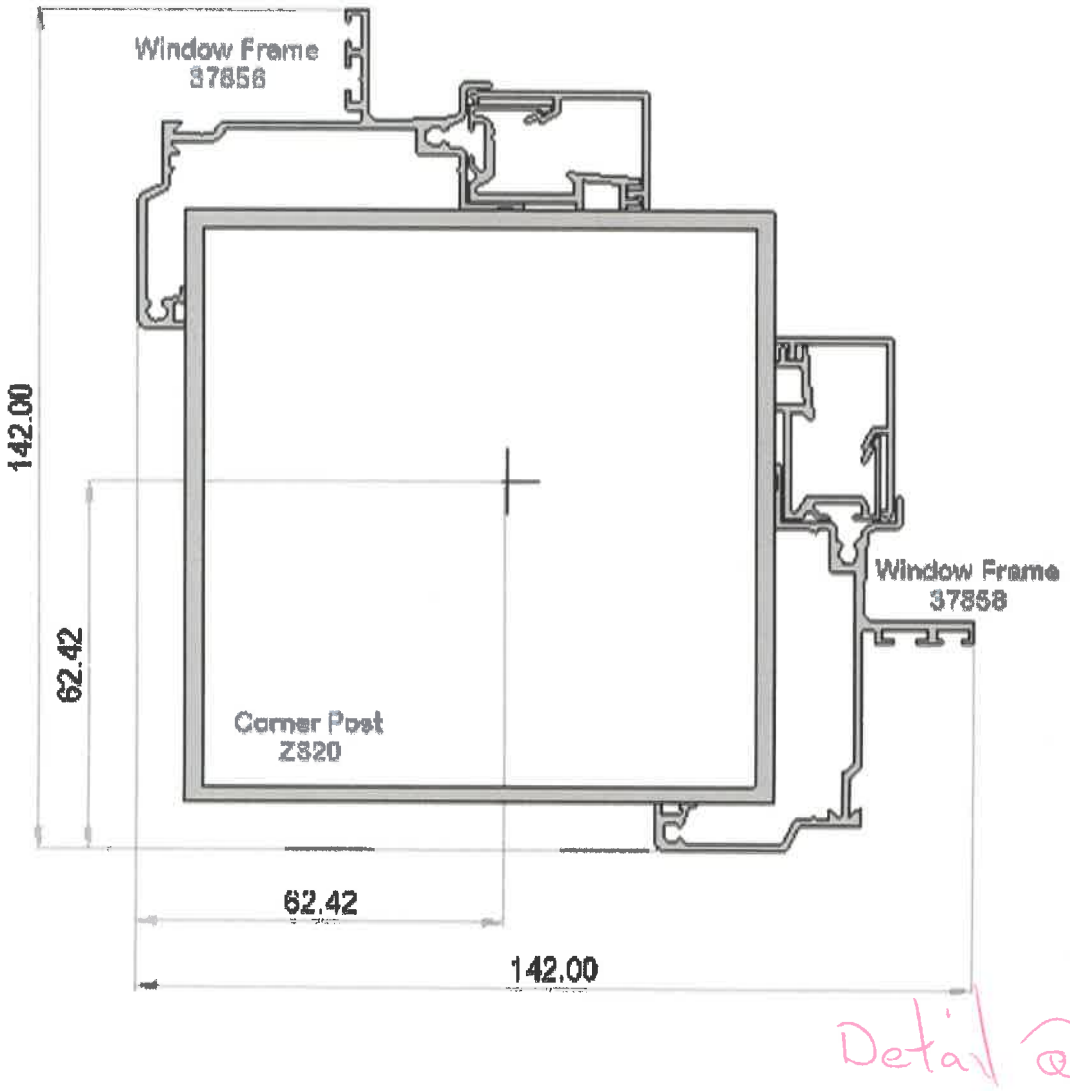

Detail @ 'B'

Mass Properties (0.0000% Relative Error)

Entity: Total

All data computed successfully fo

Basic Properties

Density	1	Kg/mm^3	Mass per Unit Area	1	Kg/mm^2
Volume	1651.71961764	mm^3	Surface Mass	4783.10614935	Kg
Mass	1651.71961764	Kg	Surface Area	4783.10614935	mm^2

Angular Velocity (radians/sec)

X 0 Y 0 Z 0

Mass Properties with respect to Center of Gravity

Center of Gravity

X 62.4234836199 Y 62.4234836199 Z 0.5

Kinetic Energy (Kg-mm^2/sec^2) 0

Moment of Inertia (Kg-mm^2)

Ixx 2997556.92058 Iyy 2997556.92058 Izz 5994838.55455

Ixy 799293.037851 Iyz 1.7416823539e-C Ixz 1.82808435056e-

Angular Momentum (Kg-mm^2/sec)

Hx 0 Hy 0 Hz 0

RECEIVED 1/12/2021

Bcon21/0800 - WDC Approved Plans - 15/12/2021

OMEGA® WINDOWS + DOORS
BY MCKECHNIE®

DESIGN OF ALUMINIUM MULLIONS (6060T5) - UNIFORMLY DISTRIBUTED LOAD.

MULLION SPACING AND SPAN CALCULATIONS ARE TO THE CURRENT NZS 4211 : 2008

TABLE : NZS 4211 : 2008. ULTIMATE & SERVICEABILITY LIMIT STATE WIND ZONE TEST PRESSURES									
	LOW		MEDIUM		HIGH		VERY HIGH		EXTRA HIGH	
ULTIMATE WIND PRESSURE	720	Pa	960	Pa	1360	Pa	1760	Pa	2130	Pa
SERVICEABILITY WIND PRESSURE	510	Pa	680	Pa	970	Pa	1250	Pa	1515	Pa

DATE :	8/09/2021	**AMENDMENT :**	
FABRICATOR :	RiverCity Building & Aluminium		
PROJECT :	Conservatory @ 12 Downes Avenue, Whanganui		
WIND ZONE :	NZS 4211 WIND ZONE HIGH	**ULTIMATE :** / **SERVICEABILITY :**	1360 Pa / 970 Pa
UNIT / TYPE(S) :	Interlockers (Detail 'C')		

SECTION(S) :

35810 & 35807

SECTION PROPERTIES :

DEPTH OF SECTION	=	136.95	mm
WIDTH OF SECTION	=	65.00	mm
DISTANCE TO C of GRAVITY ("Y" mm)	=	73.81	mm
DISTANCE TO C of GRAVITY ("X" mm)	=	29.59	mm

SECTION PROFILE (NOT TO SCALE) :

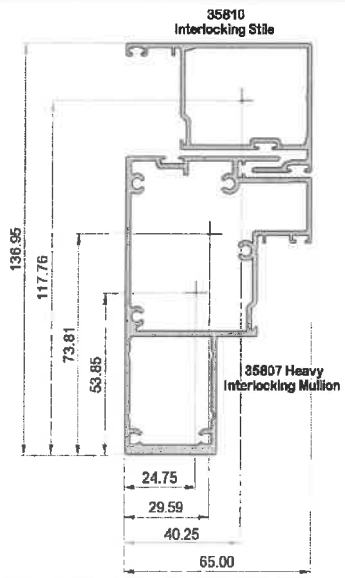

MULLION SPACING AND SPAN CALCULATION :

ULTIMATE WIND PRESSURE	=	1360	Pa
SERVICEABILITY WIND PRESSURE	=	970	Pa
MULLION SPAN	=	2.000	m
MULLION SPACING	=	1.200	m
MOMENT OF INERTIA ("Ixx")	=	968790	mm^4
DEPTH OF SECTION	=	136.95	mm
DISTANCE TO C of GRAVITY ("Y" mm)	=	73.81	mm
SECTION MODULUS 1	=	13125	mm^3
SECTION MODULUS 2	=	15344	mm^3
MINIMUM SECTION MODULUS	=	13125	mm^3
j_Y	=	0.95	
j_u	=	0.85	
F_{ty}	=	110	MPa
F_{tu}	=	150	MPa
k_t	=	1.0	
DESIGN BENDING MOMENT	=	0.82	kNm
BENDING STRENGTH 1	=	1.37	kNm
BENDING STRENGTH 2	=	1.67	kNm
MINIMUM BENDING STRENGTH	=	1.37	kNm
PASSED or FAILED	=	**PASSED**	
DEFLECTION	=	3.6	mm
SPAN / DEFLECTION	=	551	
PASSED or FAILED	=	**PASSED**	

36 Paraite Road, Bell Block
Private Bag 2007, New Plymouth
New Zealand

Ph: 0800 500 141
Fax: 0800 500 161
www.omegawindows.co.nz

McKechnie Transforming Aluminium

RECEIVED 1/12/2021

35810
Interlocking Stile

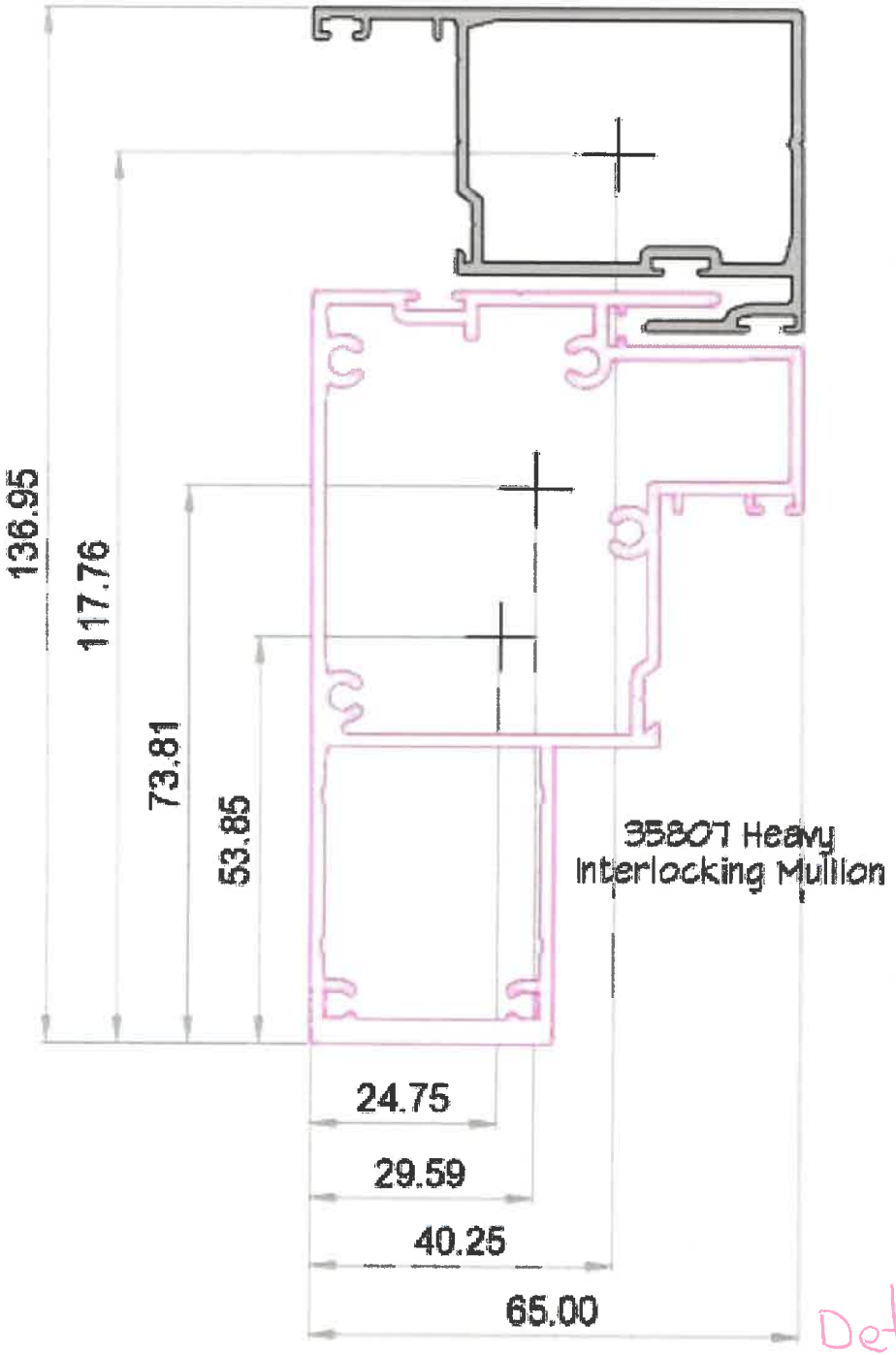

Mass Properties (0.0000% Relative Error)

Entity: Solid ID: 201746 Color: 16 Level: 35807 Mod Interlocker (3.7)

All data computed successfully for

Basic Properties

Density	1	Kg/mm^3	Mass per Unit Area	1	Kg/mm^2
Volume	749.875542182	mm^3	Surface Mass	2354.71455778	Kg
Mass	749.875542182	Kg	Surface Area	2354.71455778	mm^2

Angular Velocity (radians/sec)

X 0 Y 0 Z 0

Mass Properties with respect to Center of Gravity

Center of Gravity

X 24.7531008675 Y 53.8489315587 Z 0.5

Kinetic Energy (Kg-mm^2/sec^2) 0

Moment of Inertia (Kg-mm^2)

Ixx	883053.90712	Iyy	306963.204856	Izz	1189892.13272
Ixy	-165139.652121	Iyz	0	Ixz	0

Angular Momentum (Kg-mm^2/sec)

Hx 0 Hy 0 Hz 0

Radius of Gyration (mm)

Rx 34.3161860492 Ry 20.2324541908 Rz 39.8344845691

OK | Model CG | Model Principal Axes

Detail @ 'C'a Combined Ixx = 968789.54

RECEIVED 1/12/2021

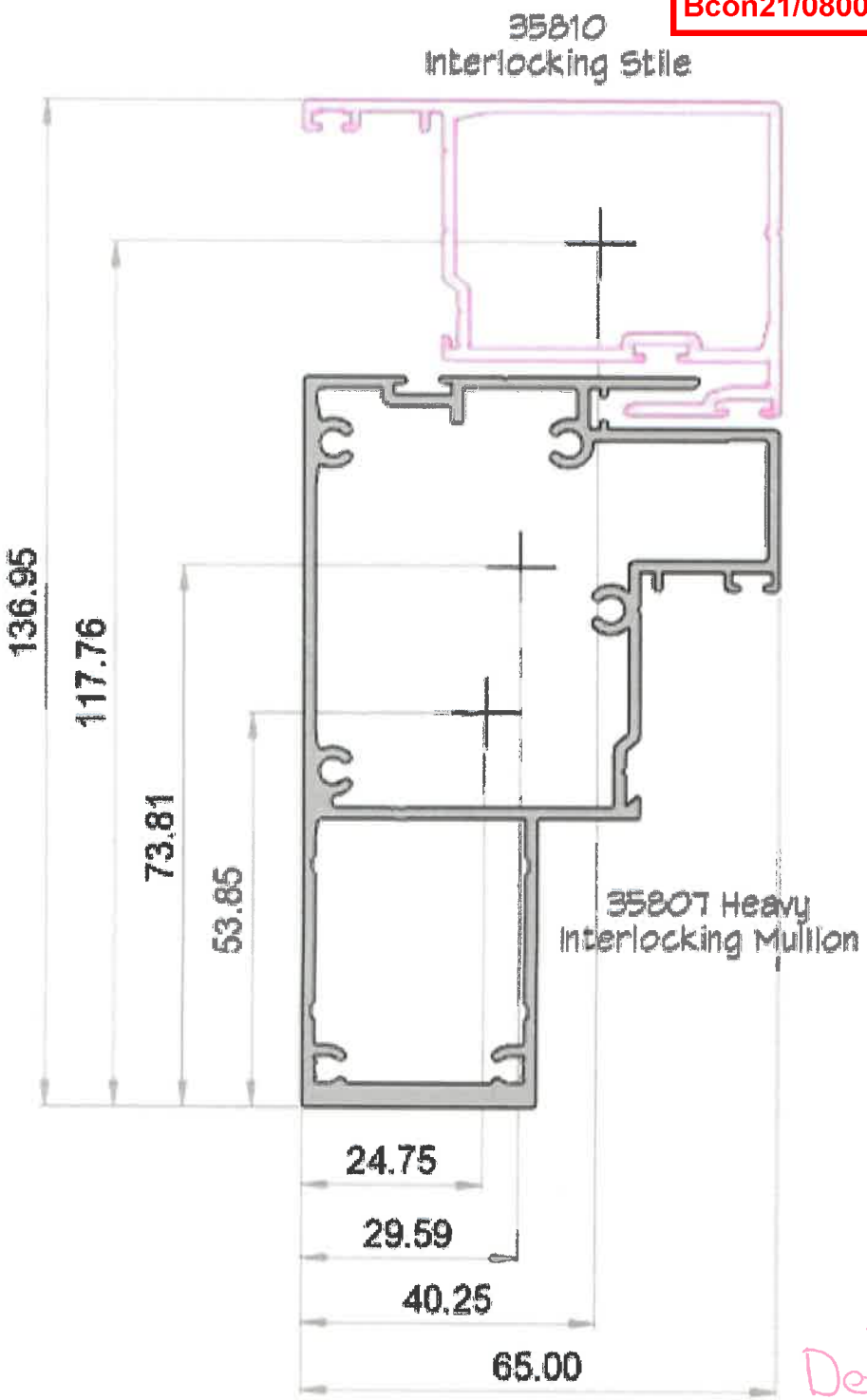

Mass Properties (0.0000% Relative Error)

Entity: Solid ID: 202737 Color: 16 Level: 35807 Mod Interlocker (3.7)

All data computed successfully for t

Basic Properties

Density	1	Kg/mm^3	Mass per Unit Area	1	Kg/mm^2
Volume	340.510670998	mm^3	Surface Mass	1129.75853719	Kg
Mass	340.510670998	Kg	Surface Area	1129.75853719	mm^2

Angular Velocity (radians/sec)

X 0 Y 0 Z 0

Mass Properties with respect to Center of Gravity

Center of Gravity

X 40.2530539748 Y 117.762614182 Z 0.5

Kinetic Energy (Kg-mm^2/sec^2) 0

Moment of Inertia (Kg-mm^2)

Ixx 85735.64415 Iyy 129830.1209 Izz 215509.013271

Ixy 37863.496747 Iyz 0 Ixz 0

Angular Momentum (Kg-mm^2/sec)

Hx 0 Hy 0 Hz 0

Radius of Gyration (mm)

Rx 15.8677498132 Ry 19.526408358 Rz 25.1574927374

OK | Model CG | Model Principal Axes

Detail @ C'b

RECEIVED 1/12/2021

Bcon21/0800 - WDC Approved Plans - 15/12/2021

OMEGA® WINDOWS + DOORS
BY MCKECHNIE®

DESIGN OF ALUMINIUM MULLIONS (6060T5) - UNIFORMLY DISTRIBUTED LOAD.

MULLION SPACING AND SPAN CALCULATIONS ARE TO THE CURRENT NZS 4211 : 2008

TABLE : NZS 4211 : 2008. ULTIMATE & SERVICEABILITY LIMIT STATE WIND ZONE TEST PRESSURES									
	LOW		MEDIUM		HIGH		VERY HIGH		EXTRA HIGH	
ULTIMATE WIND PRESSURE	720	Pa	960	Pa	1360	Pa	1760	Pa	2130	Pa
SERVICEABILITY WIND PRESSURE	510	Pa	680	Pa	970	Pa	1250	Pa	1515	Pa

DATE :	8/09/2021	**AMENDMENT :**	
FABRICATOR :	RiverCity Building & Aluminium		
PROJECT :	Conservatory @ 12 Downes Avenue, Whanganui		
WIND ZONE :	NZS 4211 WIND ZONE HIGH	**ULTIMATE :** / **SERVICEABILITY :**	1360 Pa / 970 Pa
UNIT / TYPE(S) :	Interlocker Stiles (Detail 'D')		

SECTION(S) :

36281 / 35814

SECTION PROPERTIES :

DEPTH OF SECTION	=	139.20	mm
WIDTH OF SECTION	=	65.00	mm
DISTANCE TO C of GRAVITY ("Y" mm)	=	66.06	mm
DISTANCE TO C of GRAVITY ("X" mm)	=	32.73	mm

SECTION PROFILE (NOT TO SCALE) :

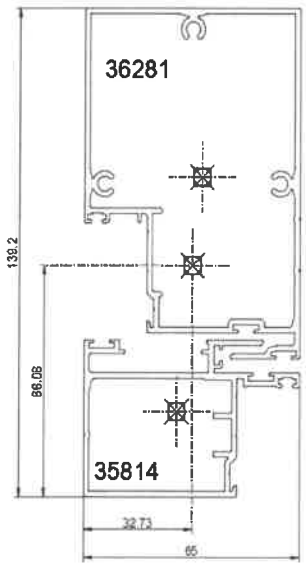

MULLION SPACING AND SPAN CALCULATION :

ULTIMATE WIND PRESSURE	=	1360	Pa
SERVICEABILITY WIND PRESSURE	=	970	Pa
MULLION SPAN	=	2.000	m
MULLION SPACING	=	1.200	m
MOMENT OF INERTIA ("Ixx")	=	841524	mm^4
DEPTH OF SECTION	=	139.20	mm
DISTANCE TO C of GRAVITY ("Y" mm)	=	66.06	mm
SECTION MODULUS 1	=	12739	mm^3
SECTION MODULUS 2	=	11506	mm^3
MINIMUM SECTION MODULUS	=	11506	mm^3
j_Y	=	0.95	
j_u	=	0.85	
F_{ty}	=	110	MPa
F_{tu}	=	150	MPa
k_t	=	1.0	
DESIGN BENDING MOMENT	=	0.82	kNm
BENDING STRENGTH 1	=	1.20	kNm
BENDING STRENGTH 2	=	1.47	kNm
MINIMUM BENDING STRENGTH	=	1.20	kNm
PASSED or FAILED	=	**PASSED**	
DEFLECTION	=	4.2	mm
SPAN / DEFLECTION	=	479	
PASSED or FAILED	=	**PASSED**	

36 Paraite Road, Bell Block
Private Bag 2007, New Plymouth
New Zealand

Ph: 0800 500 141
Fax: 0800 500 161
www.omegawindows.co.nz

McKechnie Transforming Aluminium

RECEIVED 1/12/2021

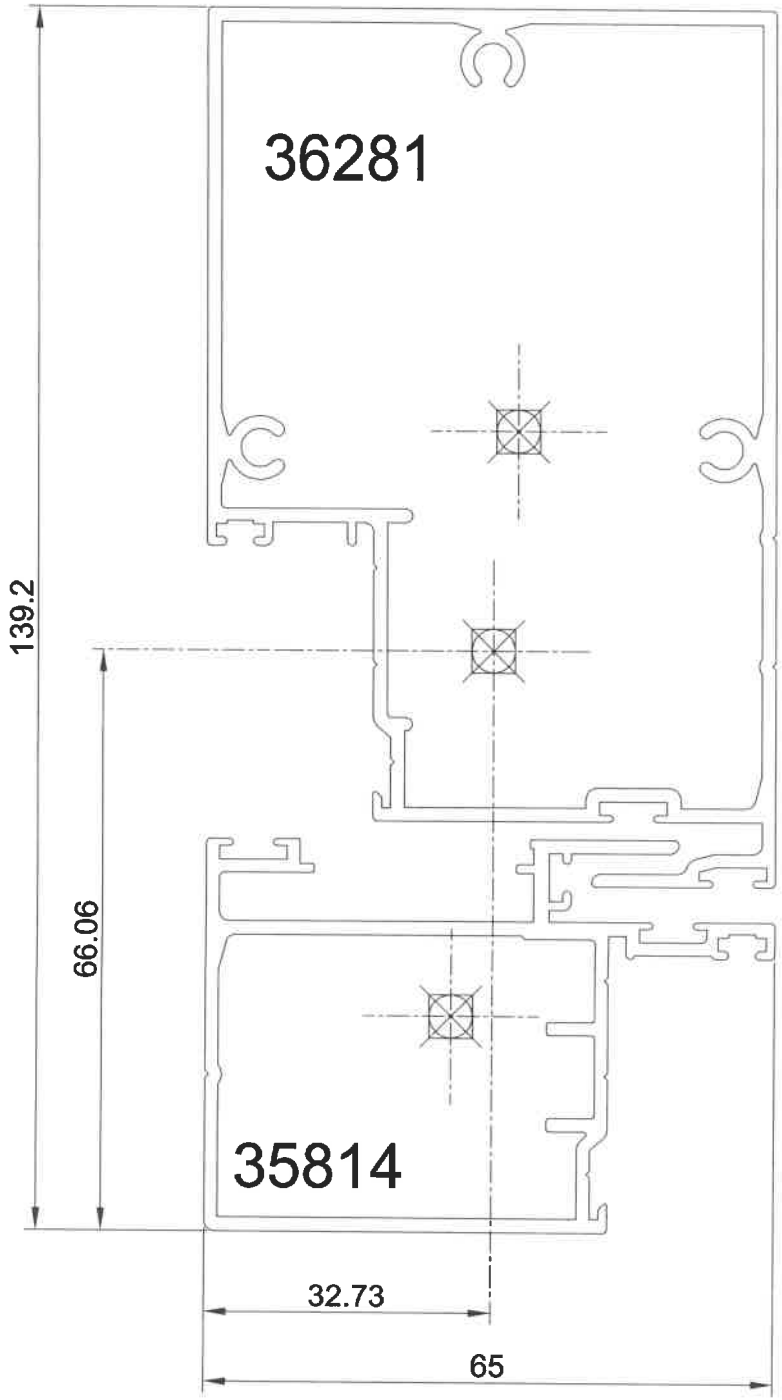

Area: 1040.93 mm²

Centroid: X: 32.73 mm
Y: 66.06 mm

Combined moments and X-Y directions about centroid:
Ixx: 841523.63 mm^4
Iyy: 539363.82 mm^4

Detail @ 'D'

RECEIVED 1/12/2021

Bcon21/0800 - WDC Approved Plans - 15/12/2021

OMEGA® WINDOWS + DOORS
BY MCKECHNIE®

DESIGN OF ALUMINIUM MULLIONS (6060T5) - UNIFORMLY DISTRIBUTED LOAD.

MULLION SPACING AND SPAN CALCULATIONS ARE TO THE CURRENT NZS 4211 : 2008

TABLE : NZS 4211 : 2008. ULTIMATE & SERVICEABILITY LIMIT STATE WIND ZONE TEST PRESSURES

	LOW	MEDIUM	HIGH	VERY HIGH	EXTRA HIGH
ULTIMATE WIND PRESSURE	720 Pa	960 Pa	1360 Pa	1760 Pa	2130 Pa
SERVICEABILITY WIND PRESSURE	510 Pa	680 Pa	970 Pa	1250 Pa	1515 Pa

DATE :	8/09/2021	**AMENDMENT :**	
FABRICATOR :	RiverCity Building & Aluminium		
PROJECT :	Conservatory @ 12 Downes Avenue, Whanganui		
WIND ZONE :	NZS 4211 WIND ZONE HIGH	**ULTIMATE :**	1360 Pa
		SERVICEABILITY :	970 Pa
UNIT / TYPE(S) :	Coupling Bar (Detail 'E')		

SECTION(S) :

36185 / 37858 / 37686

SECTION PROPERTIES :

DEPTH OF SECTION	=	98.00	mm
WIDTH OF SECTION	=	127.60	mm
DISTANCE TO C of GRAVITY ("Y" mm)	=	43.63	mm
DISTANCE TO C of GRAVITY ("X" mm)	=	60.67	mm

SECTION PROFILE (NOT TO SCALE) :

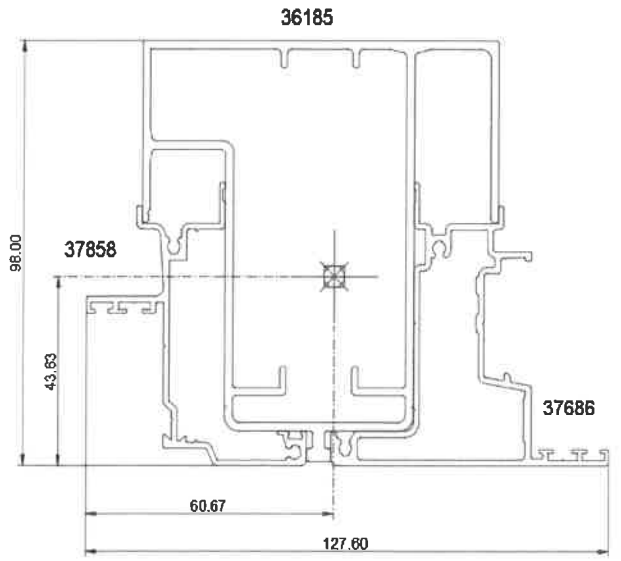

MULLION SPACING AND SPAN CALCULATION :

ULTIMATE WIND PRESSURE	=	1360	Pa
SERVICEABILITY WIND PRESSURE	=	970	Pa
MULLION SPAN	=	2.000	m
MULLION SPACING	=	1.700	m
MOMENT OF INERTIA ("Ixx")	=	1607561	mm^4
DEPTH OF SECTION	=	98.00	mm
DISTANCE TO C of GRAVITY ("Y" mm)	=	43.63	mm
SECTION MODULUS 1	=	36845	mm^3
SECTION MODULUS 2	=	29567	mm^3
MINIMUM SECTION MODULUS	=	29567	mm^3
j_Y	=	0.95	
j_u	=	0.85	
F_{ty}	=	110	MPa
F_{tu}	=	150	MPa
k_t	=	1.0	
DESIGN BENDING MOMENT	=	1.16	kNm
BENDING STRENGTH 1	=	3.09	kNm
BENDING STRENGTH 2	=	3.77	kNm
MINIMUM BENDING STRENGTH	=	3.09	kNm
PASSED or FAILED	=	**PASSED**	
DEFLECTION	=	3.1	mm
SPAN / DEFLECTION	=	646	
PASSED or FAILED	=	**PASSED**	

36 Paraite Road, Bell Block
Private Bag 2007, New Plymouth
New Zealand

Ph: 0800 500 141
Fax: 0800 500 161
www.omegawindows.co.nz

McKechnie Transforming Aluminium

RECEIVED 1/12/2021

Bcon21/0800 - WDC Approved Plans - 15/12/2021

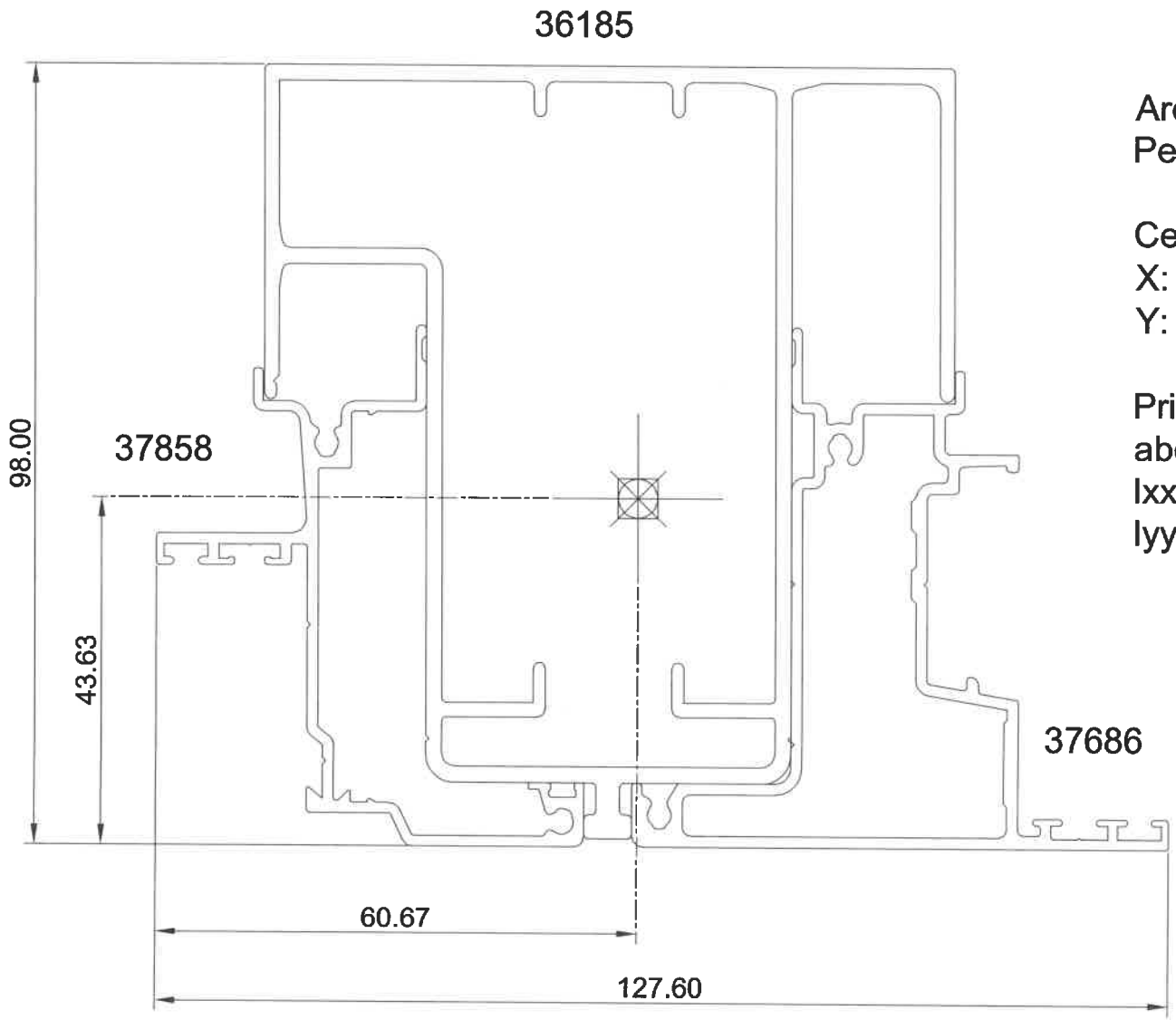

Area: 1491.66 mm^2
Perimeter: 1744.69 mm

Centroid:
X: 60.67 mm
Y: 43.63 mm

Principal moments and X-Y directions about centroid:
Ixx 1607561 mm^4
Iyy 1411637 mm^4

Detail @ 'E'

RECEIVED 1/12/2021