Enhancing the quality of the environment

ENVIRONMENTAL SERVICES
WANGANUI DISTRICT COUNCIL

APPLICATION for P.I.M/Building Consent

RECEIVED
WANGANUI DISTRICT COUNCIL
09 SEP 2003

This application is for a: (tick the appropriate box)

- ☐ Project Information Memorandum - PIM (preliminary application for a Building Consent)
- ☑ Building Consent
- ☐ Alteration to Approved Plan

BC # 314 23

(A) Owner
Name: MARK ASHWORTH
Mailing Address: 12 DOWNS AVE
Phone: 34 88144 Fax:

(B) Designer
Name: TOTALSPAN STEEL Buildings
Mailing Address: 59 ANZAC PDE
Phone: 34 79842 Fax: 34 79844

(C) Builder
Name: MIKE PAUL
Mailing Address: 59 ANZAC PDE
Phone: 063479842 Fax: 34 79844

(D) Craftsman Plumber

(E) Registered Drainlayer

CONTACT PERSON i.e. A B C D E (Circle one)

Project
Description of PROJECT and USE: CARPORT

Project Location
Street Address/Rural No: 12 DOWNS AVE

Durable Life of Project (i.e. 5, (15), 50+ years)

Value of Project Work
(include all labour & materials)

$ 3500 (Incl. GST)

Consent Fees to be paid by? OWNER

Code Compliance Certificate to be sent to? OWNER

FLOOR AREA OF PROJECT
New Residential Dwellings or
New Commercial Only ..... m^2

LEGAL DESCRIPTION
WDC Property No.
Valuation Roll No.
Lot(s) 17 DP 58510
Section Block
Survey District

Signed by (on behalf of) the applicant
Signature:
Owner, builder, plumber, designer, agent (circle one)
Date: 9 / 8 / 03

FEES APPLICABLE (office use only)

Building Consent Application	$
Building Consent Issue	$
P.I.M	$
Non-notified Appl. Fee	$
Prepaid Crossing	$
Prepaid Sewer Connection	$
Prepaid Water Connection	$
Stormwater Connection	$
BIA Levy	$
Additional Charges	$
Total Fees (Incl. G.S.T)	$

PTO ☞

The information will be included in a Public Register of Consents issued which is available for public perusal under the Privacy Act 1993 section 54. This may result in receipt by the 'Owner' of trade advertising.

Project Details

The project involves the following
(tick each applicable box, if any, and attach two(2) copies of any relevant information)

(1) ☐ Location in relation to legal boundaries and external dimensions of new, relocated or altered buildings

(2) ☐ New provisions to be made for vehicular access and on-site parking, ie. a new crossing

(3) ☐ Provisions to be made in building over or adjacent to any road or public place, ie. hoardings, signs

(4) ☐ New provisions to be made for disposing of stormwater and wastewater

(5) ☐ Precautions to be taken where building work is to take place over existing drains or sewers or in close proximity to wells or watermains

(6) ☐ New connections to public utilities, ie. new drainage or water connections

(7) ☐ Provisions to be made for any demolition work ie. the protection of the public, suppression of dust, disposal of debris, disconnection from public utilities and suppression of noise

(8) ☐ Any cultural heritage significance of the building or building site, including whether it is on a marae

Project Documents (provided with this application)

☑ Plans and specifications

(22) ☐ Producer Statements (ie. truss design, design review) - specify: .....

(23) ☐ Other Documents - specify: .....

Inspections

(26) ☑ By Wanganui District Council

(27) ☐ Other - specify (ie. Design Engineer): .....

For office use only

Unit	Checks				Inspections	Approved	
	Initials	Date	Initials	Date	No.	Initials	Date
Administration							
Planning						KLG	11/9/03
Fire Design							
Building	GW	15/9				BL	19/9/03
Drainage							
Water							
Structural							
Plumbing/Drainage						GW	15/9
Roading							
Health							
Dangerous Goods							

Approved for issue of PIM/Building Consent

District Building Controller: Date: 19 SEP 2003

Wanganui District Council

Building a better community with the people of the Wanganui District

101 Guyton Street
P O Box 637, Wanganui
Phone: (06) 349 0001
Fax: (06) 349 0000
Email: wdc@wanganui.govt.nz
Web: www.wanganui.govt.nz

TOTAL INSPECTION TIME REPORT

Building Consent Number BC3/1423

Total Estimated Inspection Time	105
Total Actual Inspection Time	0
Inspection Time Difference **At BC Issue** Time to be charged. **At Completion** Positive amount = time to be credited Negative amount = time to be charged	105

Signed for and on behalf of the Wanganui District Council

65 mins

Development Checksheet

Residential

Property Address: 12 Downs Ave.						
Project: Carport				Site Area:		
	Operative Plan			Proposed Plan		
Rule	Required	Provided	O.K.	Required	Provided	O.K.
Coverage				40%	< 40%	✓
Maximum Height				10m	2.4m	✓
9m x 9m Triangle						
Front Boundary						
Side Boundary						
Side Boundary						
Rear Boundary						
Separation of Units						
Outdoor Living						
Storage						
Parking						✓
Access				as per	existing	✓
Dimensions/ Easements						

complies with height recession plane angles

APPROVED
3/14 23
Consent No.

Comments: Complies with Proposed District Plan

[signature] 11/9/03

Wanganui District Council

Building a better community with the people of the Wanganui District

101 Guyton Street
P O Box 637, Wanganui
Phone: (06) 349 0001
Fax: (06) 349 0000
Email: wdc@wanganui.govt.nz
Web: www.wanganui.govt.nz

16 September 2003

Mr M Ashworth
12 Downes Ave
WANGANUI 5001

Dear Sir or Madam:

1st Request for further information on Application.

Project Number:	BC3/1423
Project Location:	12 Downes Ave WANGANUI 5001
Project Description:	Erect new carport attached to existing garage.

The documentation supplied for the above project has been reviewed and raises the following comments:

1. **Please show the dimensions of the carport on the site plan. (Graham Wait - Building Control Officer)**

We have placed this application on hold until we receive your advice regarding the above comments, and the issues raised have been resolved. If you have any queries please contact this office and quote Project Number BC3/1423

Yours sincerely

Kim Glentworth
Customer Services Officer

Brendon

+6492965362

FREDERICK R SMITH

7 Wairakei Road, Strowan, New Zealand, Telephone 64 3 351 3005, Facsimile 64 3 351 3006, mobile 025 997 139

PRODUCER STATEMENT - DESIGN

Issued by:	Frederick Roland Smith
to:	Versatile Buildings Limited
for the:	Local Territorial Authority
in respect of :	Steel Framed Totalspan (Budget) Buildings

F R Smith Consulting Engineer has been engaged to provide structural design services in respect of the requirements of Clauses B1 of the Building Regulations 1992 for all of the work as specified of the building work.

The design has been checked in accordance with B1/VM1, B1/VM4, NZS 4203:1992, NZS 3101 and AS/NZS 4600 of the approved documents Issued by the Building Industry Authority and the work is described on drawings prepared by Frederick R Smith Consulting Engineer, as:-

Enclosed Buildings

97057NZ -	40/S45/1 to 3	
	60/S45/1 to 4	60/S50/1 to 4
	75/S45/1 to 4	75/S50/1 to 4
	90/S45/1 to 4	90/S50/1 to 4
	Sht D1	
99044NZ	12/S45/1 to 5	

Farmsheds

97057NZ	60/S45/1 to 4
	75/S45/1 to 4
	90/S45/1 to 4

Gable Roofed Carport

TSG93046NZ	TSGRC/S45/1&2
93-69NZ	GRC/S45/1&2

Dutch Gable Carport

TSDC93046NZ	TSDGC/S45/1&2

Flat Roofed Carports

TSFS93046NZ	TSFRCS/S45/1
TSF93046NZ	TSRC/S45/1&2
93046NZ	FRC/S45/1&2

Heritage Barn

000445NZ	HB/S45/1 to 4.

As a designer I have taken all reasonable steps necessary (including site investigation where applicable) to verify design assumptions. I am satisfied on reasonable grounds that in relation to the building work specified above the provisions of the Building Code would be met if the building work were properly completed in accordance with the drawings, specifications and other documents according to which the building is proposed to be constructed and which have been submitted with the application. I understand that this Producer Statement, if accepted, may be relied upon for the purpose of establishing compliance with the Building Code.

Signed..... Date 25 October 2001

BE(Civil), MIPENZ, MACENZ., MIEAust,
Registered Engineer,
New Zealand No. 2576 (1957)

APPROVED

L 3/1423

Consent No.

APPROVED

L 3/14423

Consent No.

DRAIN LENGTH 2.00

FALL 4 MM.

PROPOSED SITE PLAN FOR

LOT 17 DOWNES AVE. WAN

D.P. 58510

PLUMBING & DRAINAGE

Proposed carport 34 m²

Flat Roof

Connect into Existing Gutter

Existing Garage

17.790

5880mm

5880mm

9.00

9.00

NORTH.

33.600

35.550

5m

B

I.V.J.

G.T.

T.V.

I.B

DINE. RM.

W.C.

900

F.L. 850

LOUNGE.

BED RM 1.

3.160

I.B

250

250

8.100

STORM WATER P.

EXISTING CONNECTION

EXISTING SEWER CONNECTION

I.P.

100

100

DOWNES AVE

CROWN OF RD.

18.510

LONGITUDINAL SECTION DRAINAGE

FLOOR LEVEL.

600

100 MM DIAM SEWER AT 1:60 MIN FALL.

I.B.

GROUND LEVEL.

DATUM.

G.T.N.C.

T.V.

I.V.J.

1.320

600

G.T.

I.B.

Do SPARKY'S CARPORT Plan Tomorrow

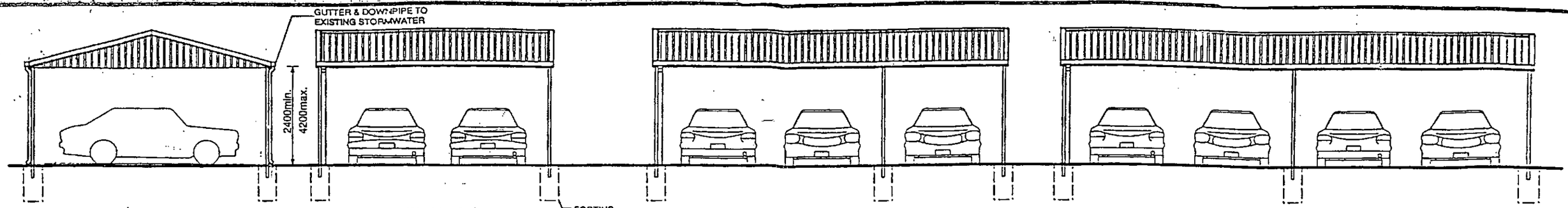

FRONT ELEVATION 1:100
TYP. GABLE CARPORT

SIDE ELEVATION 1:100
TYP. GABLE CARPORT

FRONT ELEVATION 1:100
TYP. GABLE CARPORT
WITH 3m EXTENSION

FRONT ELEVATION 1:100
TYP. GABLE CARPORT
WITH 6m EXTENSION

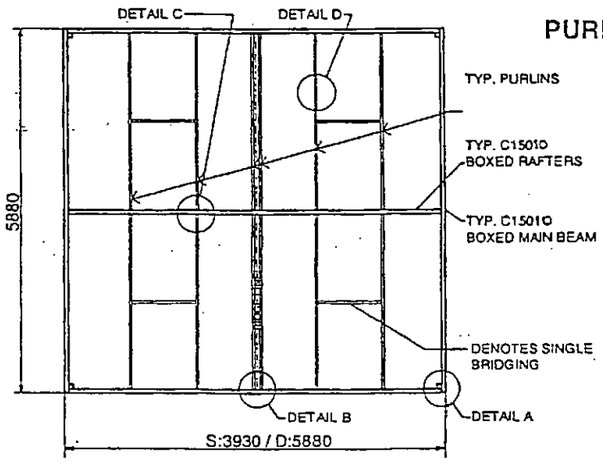

FRAMING PLAN 1:100
TYP. GABLE CARPORT

PURLIN SCHEDULE

1 ALL PURLINS TO BE SINGLE 80x40 CRIMPED C'S .

2 NUMBER OF PURLINS PER 3m BAY. ALL HEIGHTS:6 TO 30m WIDE:
3 PURLINS EACH SIDE

3 ALL PURLINS TO BE EVENLY SPACED FROM EDGE OF MAIN BEAM TO APPROX. 80mm FROM RIDGE.

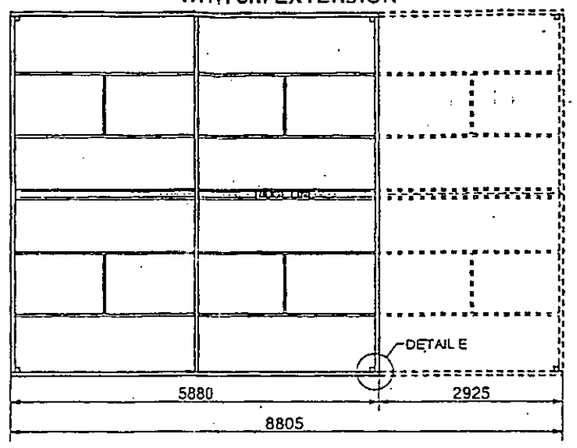

FRAMING PLAN 1:100
TYP. GABLE CARPORT
WITH 3m EXTENSION

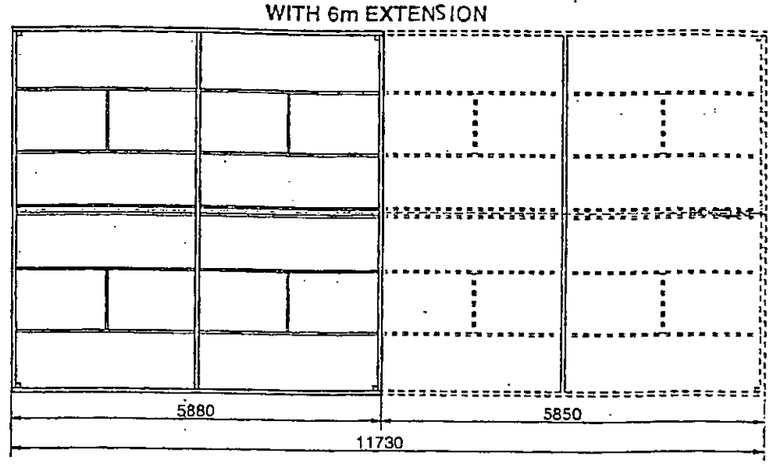

FRAMING PLAN 1:100
TYP. GABLE CARPORT
WITH 6m EXTENSION

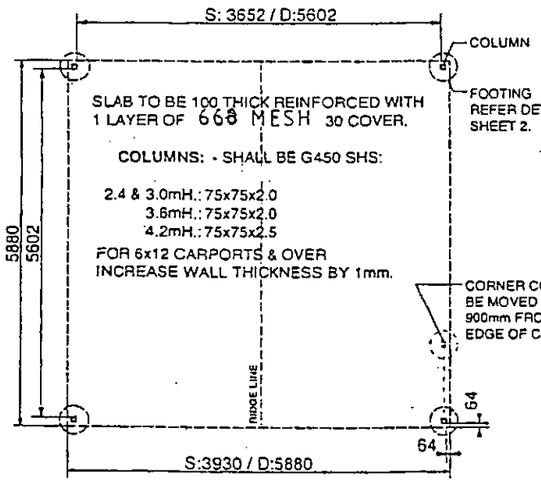

SLAB / FOOTING LAYOUT 1:100
TYP. GABLE CARPORT

APPROVED

L 3/1423

Consent No.

SLAB SIZES

6m WIDE:	(SINGLE -3930 DOUBLE - 5880)	x 5880
9m WIDE:	(SINGLE -3930 DOUBLE - 5880)	x 8805
12m WIDE:	(SINGLE -3930 DOUBLE - 5880)	x 11730
15m WIDE:	(SINGLE -3930 DOUBLE - 5880)	x 14655
18m WIDE:	(SINGLE -3930 DOUBLE - 5880)	x 17580
21m WIDE:	(SINGLE -3930 DOUBLE - 5880)	x 20505
24m WIDE:	(SINGLE -3930 DOUBLE - 5880)	x 23430
27m WIDE:	(SINGLE -3930 DOUBLE - 5880)	x 26355
30m WIDE:	(SINGLE -3930 DOUBLE - 5880)	x 29280

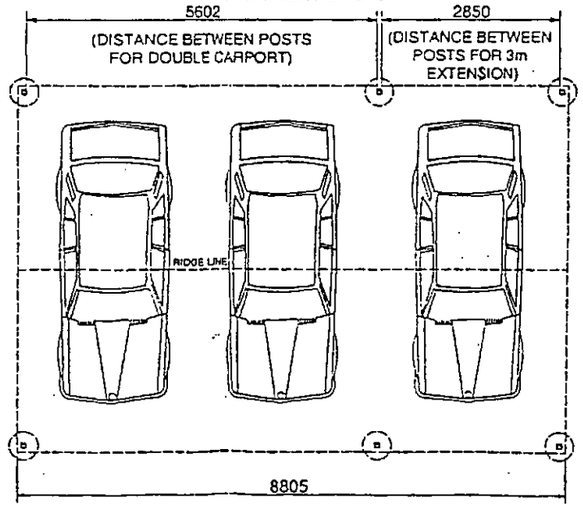

SLAB / FOOTING LAYOUT 1:100
TYP. GABLE CARPORT
WITH 3m EXTENSION

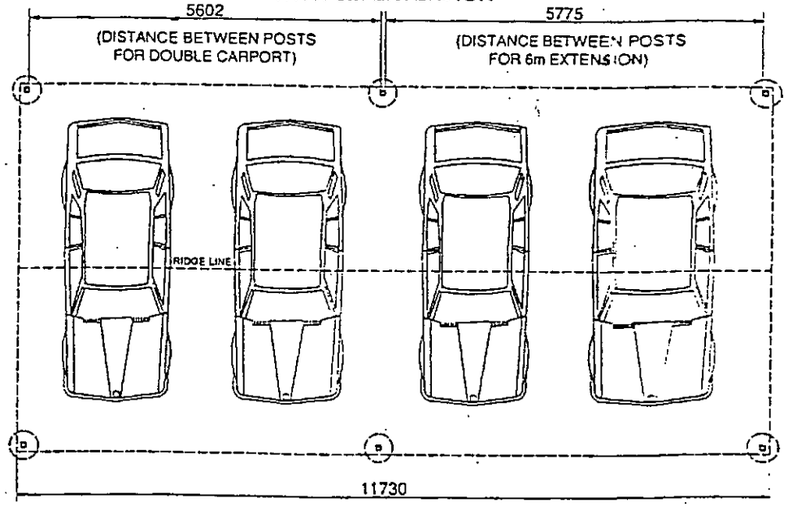

SLAB / FOOTING LAYOUT 1:100
TYP. GABLE CARPORT
WITH 6m EXTENSION

FREDERICK R SMITH
Registered Consulting Engineer
22 Glamorgan Drive
Torbay, Auckland
Phone 09 473 1262

DES NEWPORT
Consulting Engineers Pty Ltd
208 Constance St.Fortitude Valley
Brisbane, Queensland
Phone 07 3252 9822

TOTALSPAN
Phone 0800 10 35 45

STEEL FRAMED CARPORTS
S45 (HIGH)
BASIC WIND SPEED
V=45m/sT.C.2

GABLE ROOFED CARPORTS
6X6 TO 6X30m
2.4 to 4.2mH
(nominal dimensions)

TSG 93046NZ
TSGRC/S45/1

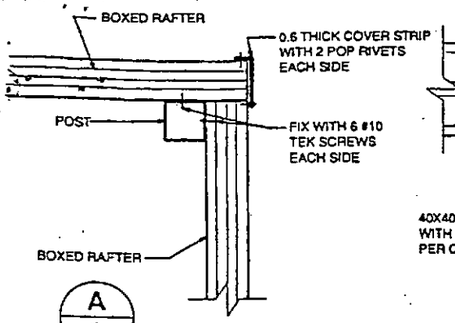

A / 1

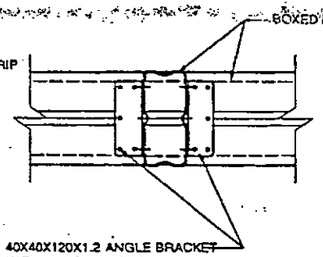

B / 1

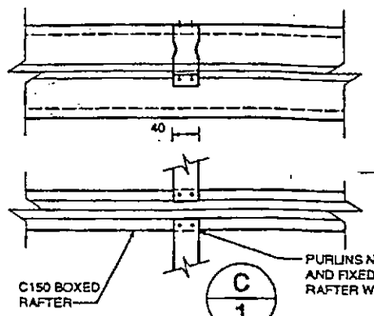

C / 1

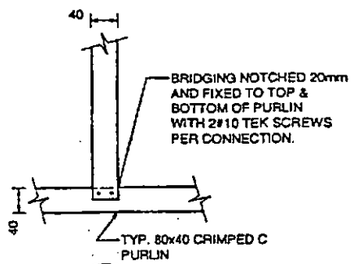

D / 1

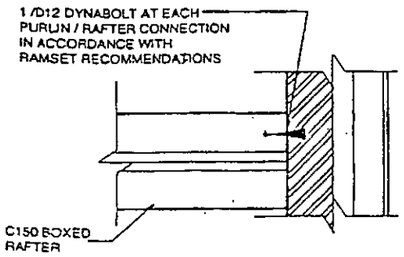

ALTERNATIVE DETAIL FOR CARPORT ABUTTING EXISTING DWELLING

1 IF AFFIXING DIRECTLY TO F/C OR TIMBER CLAD WALL USE M10 GALV. COACH SCREW INTO TIMBER STUDS
2 IT IS THE RESPONSIBILITY OF THE PURCHASER TO ASCERTAIN THAT THE STABILITY OF THE EXISTING WALL IS ADEQUATE TO SUPPORT THE ATTACHED CARPORT.
3 BOLTS MUST ONLY BE FIXED IN BRICKWORK 1200mm BELOW TOP COURSE.

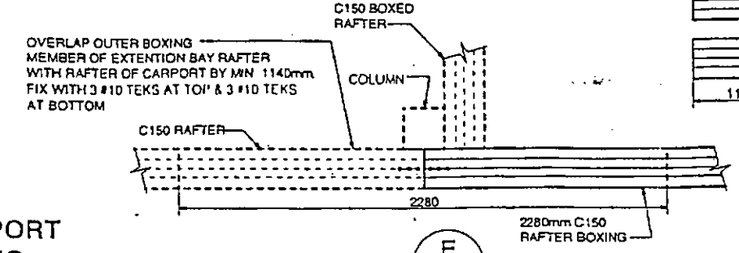

E / 1

SPLICING DETAIL
(TYP. FOR CARPORT EXTENTION)

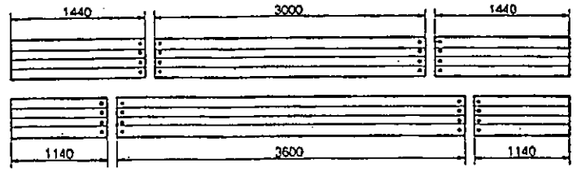

SPLICING DETAIL
(TYP. FOR SPLICED 6m LONG BEAMS)

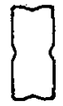

TYP. C15010 BOXED RAFTER



TYP. 80x40 CRIMPED C PURLIN

EDGE FORM MAY BE MOVED OUT TO OUTER FACE OF FOOTING IF REQUIRED

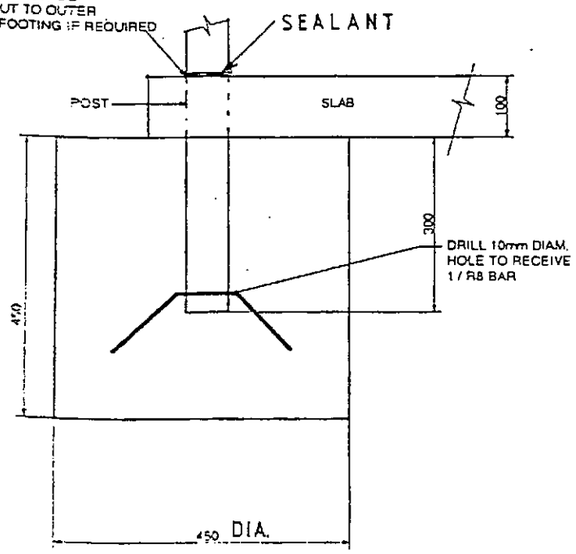

PREFERRED OPTION
LEG CAST INTO FOOTING
WITH SLAB ONTOP

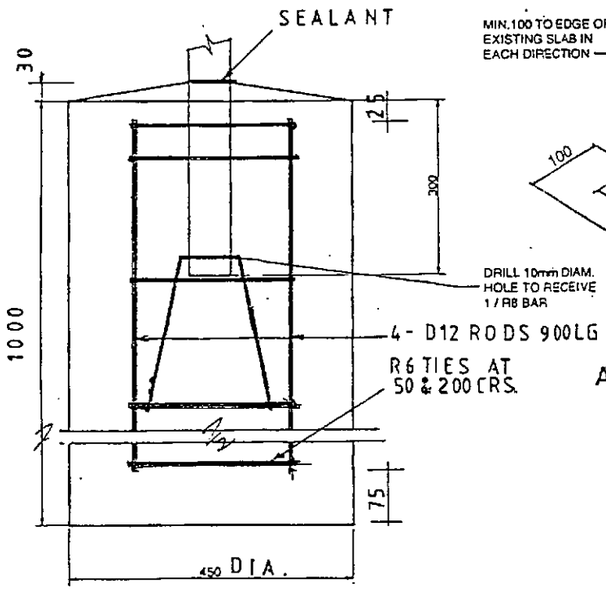

LEG CAST INTO FOOTING

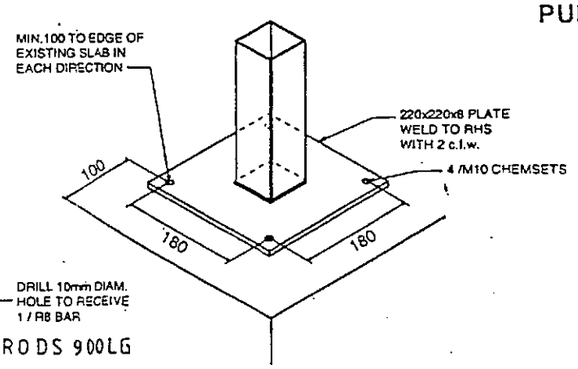

ALTERNATIVE OPTION
COLUMN FIXING TO
EXISTING SLAB

INTERNAL FOOTINGS:
INCREASE DEPTH OF INTERNAL FOOTINGS:
(I.E. CARPORTS OVER 6m x 6m)
1 COLUMNS CARRYING 1½ BAYS (9m WIDE) INCREASE DEPTH BY 30%.
2 COLUMNS CARRYING 2 BAYS (12m WIDE) INCREASE DEPTH BY 60%.

GENERAL NOTES
1 DRAWINGS SHALL NOT BE SCALED FOR ANY FABRICATION OR ERECTION DETAILS.
2 AT SETOUT, DIAGONALS MUST BE CAREFULLY CHECKED TO ENSURE BUILDING IS SQUARE.

LOADINGS
1 STRUCTURE HAS NOT BEEN DESIGNED TO CARRY OCCASIONAL LOADING AS STIPULATED IN NZS 4203
2 WIND LOAD IN ACCORDANCE WITH
NZS 4203
BASIC WIND SPEED 45 m/s
T.C.2
3 ROOF LIVE LOAD: - 0.25 kPa

CONCRETE
1 SERVICES OF AN EXPERIENCED CONSULTING ENGINEER SHOULD BE ENGAGED TO ADVISE ON SUITABILITY OF SOIL CONDITIONS.
2 CONCRETE SHALL HAVE MAXIMUM AGGREGATE SIZE OF 20 mm, SLUMP OF 80±20 AND ULTIMATE COMPRESSION STRENGTH AT 28 DAYS OF 20 MPa.
3 CONCRETE SHALL BE PLACED IN ONE CONTINUOUS OPERATION AND BE COMPACTED BY EXTERNAL VIBRATION OR HAND TAMPING.
4 FOOTING EXCAVATIONS SHALL BE THOROUGHLY CLEANED OF ALL LOOSE MATERIAL BEFORE PLACING CONCRETE.
5 FOUNDING MATERIAL SHALL HAVE SAFE BEARING CAPACITY OF 75 kPa.
6 POUR SLAB ON 50mm COMPACTED SAND AND 200um POLYTHENE WATERPROOF MEMBRANE (LAPPED 200 AND SEALED WITH APPROPRIATE TAPE). OPTIONAL RECOMMENDED

STEELWORK
1 ALL STRUCTURAL FRAMING MEMBERS SHALL BE G450 GRADE STEEL U.N.O. AND ALL CLEATS SHALL BE G450 GRADE STEEL GALVANIZED TO MIN Z200. POSTS SHALL BE G350. REFER DRAWING.
2 ROOF SHEETING SHALL BE G550 GRADE STEEL PROTECTED WITH ZINCALUME AZ150.
3 PURLINS & BRIDGING TO BE EX. 80x40 LIPPED CRIMPED CHANNELS 0.8mm B.M.T.
4 CLADDING SHEET IS TO BE FIXED AS FOLLOWS:-
W37 - AT EAVES WITH 1 SCREW EVERY PAN AND AT OTHER PURLINS WITH 1 SCREW EVERY SECOND PAN.
W41C - WITH 1 SCREW EVERY PAN TYPICALLY.
W50C - WITH 2 SCREWS EVERY PAN TYPICALLY.
ALL SCREWS INTO ROOF SHEETING TO HAVE NEOPRENE WASHERS.
5 NOTCH PURLINS AND FIX TO RAFTERS WITH 2#10 TEKS PER FLANGE EACH END.
6 SCREWS CONNECTING STRUCTURAL MEMBERS TO BE WAFERTEKS No.10 U.N.O. MANUFACTURED BY DEUTSCHER (OR EQUIVALENT) WITH MIN. EDGE DISTANCE OF 6mm AND MIN. PITCH OF 12mm.
7 RIDGES, BARGES AND ALL PENETRATIONS TO BE FLASHED WITH 0.4mm ZINCALUME FINISHED STEEL.
8 GUTTER AND DOWNPIPES TO BE FITTED AND DISCHARGED TO EXISTING STORMWATER SYSTEM. SPLICE GUTTER AT CENTRE OF BUILDING. PROVIDE TWO SCREWS INTO EACH WEB AND SEAL WITH SILICONE.
9 STEELWORK SHALL ALL COMPLY WITH THE REQUIREMENTS OF: -
AS 1170 PARTS 1 & 2 LOADING CODES
AS 4100 STEEL STRUCTURE CODES
AS 4600 COLD FORMED STEEL STRUCTURE CODE
AS 1562 DESIGN AND INSTALLATION OF METAL ROOFING
AS 1111 / 1112 METRIC HEXAGON COMMERCIAL BOLTS AND SCREWS
AS 2313 GUIDE TO THE PROTECTION OF IRON AND STEEL
AS 3566 SELF DRILLING SCREWS FOR BUILDING & CONSTRUCTION INDS

APPROVED
L 3/1423
Consent No.

© SPANBILT (AUSTRALIA) PTY. LTD. 2000

FREDERICK R SMITH
Registered Consulting Engineer
22 Glamorgan Drive
Torbay. Auckland
Phone 09 473 1262

DES NEWPORT
Consulting Engineers Pty Ltd
208 Constance St. Fortitude Valley
Brisbane, Queensland
Phone 07 3252 9822

TOTALSPAN
Phone 0800 10 35 45

STEEL FRAMED CARPORTS
S45(HIGH)
BASIC WIND SPEED
V=45m/s T.C.2

FLAT ROOFED CARPORTS
6 to 30m long
2.4 to 4.2m H
(nominal dimensions)

TSF93046NZ
TSFRC/S45/2

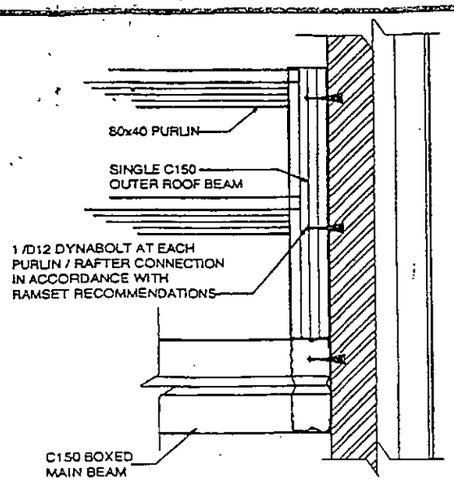

ALTERNATIVE DETAIL FOR CARPORT ABUTTING EXISTING DWELLING

1 IF AFFIXING DIRECTLY TO F/C OR TIMBER CLAD WALL USE M10 GALV. COACH SCREW INTO TIMBER STUDS
2 IT IS THE RESPONSIBILITY OF THE PURCHASER TO ASCERTAIN THAT THE STABILITY OF THE EXISTING WALL IS ADEQUATE TO SUPPORT THE ATTACHED CARPORT.
3 BOLTS MUST ONLY BE FIXED IN BRICKWORK 1200mm BELOW TOP COURSE.

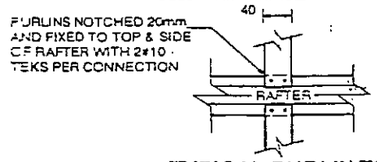

TYPICAL PURLIN TO RAFTER DETAILS

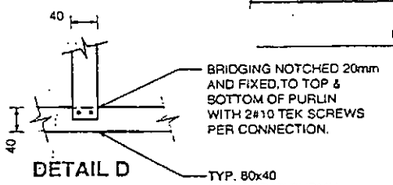

DETAIL D

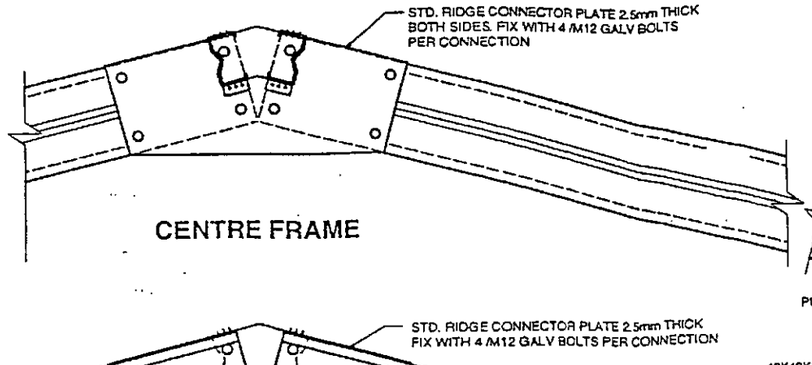

CENTRE FRAME

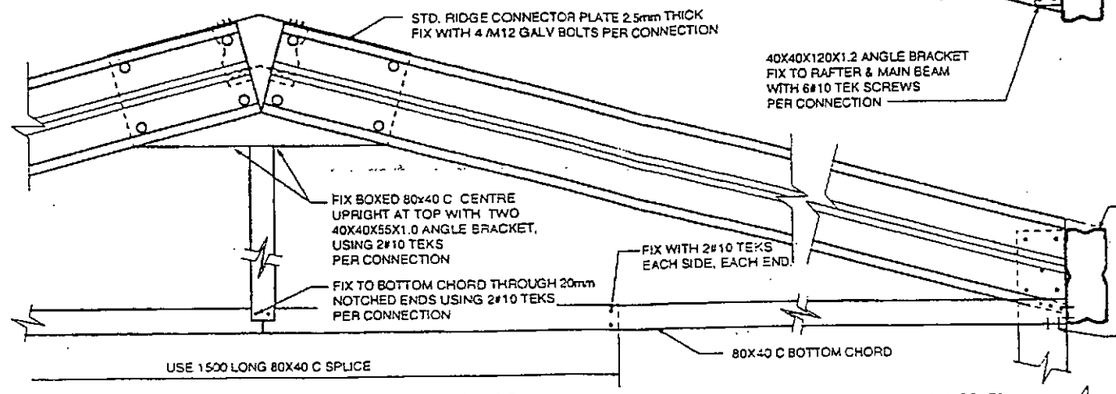

DETAIL B END FRAME

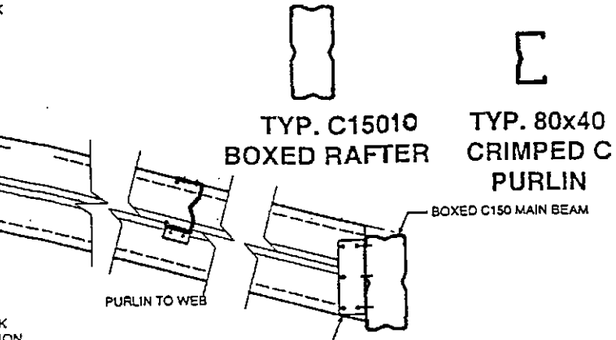

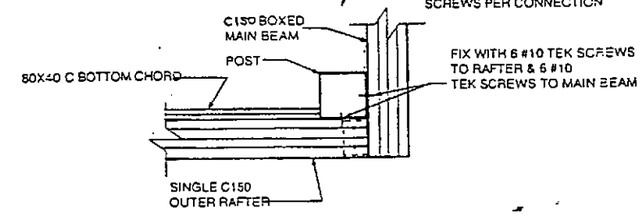

DETAIL A

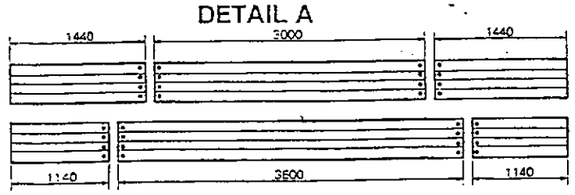

SPLICING DETAIL
(TYP. FOR SPLICED 6m LONG BEAMS)

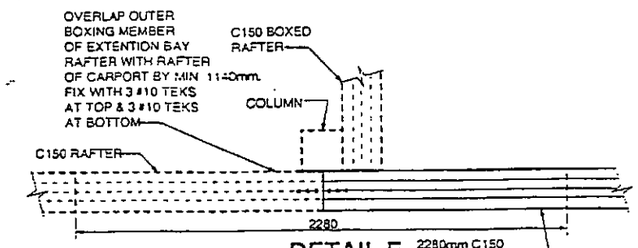

DETAIL E
SPLICING DETAIL
(TYP. FOR CARPORT EXTENSION)

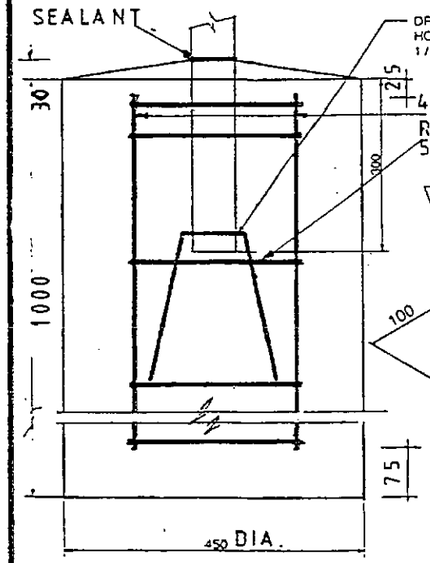

LEG CAST INTO FOOTING

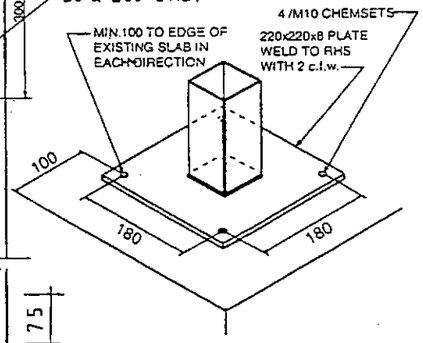

ALTERNATIVE OPTION
COLUMN FIXING TO
EXISTING SLAB

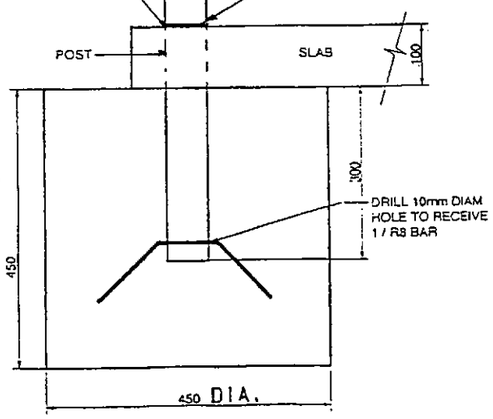

PREFERRED OPTION
LEG CAST INTO FOOTING
WITH SLAB ONTOP

GENERAL NOTES
1 DRAWINGS SHALL NOT BE SCALED FOR ANY FABRICATION OR ERECTION DETAILS.
2 AT SETOUT, DIAGONALS MUST BE CAREFULLY CHECKED TO ENSURE BUILDING IS SQUARE.

LOADINGS
1 STRUCTURE HAS NOT BEEN DESIGNED TO CARRY OCCASIONAL LOADING AS STIPULATED IN NZS 4203
2 WIND LOAD IN ACCORDANCE WITH
NZS 4203
BASIC WIND SPEED 45 m/s
T.C.2
3 ROOF LIVE LOAD; - 0.25 kPa

CONCRETE
1 SERVICES OF AN EXPERIENCED CONSULTING ENGINEER SHOULD BE ENGAGED TO ADVISE ON SUITABILITY OF SOIL CONDITIONS.
2 CONCRETE SHALL HAVE MAXIMUM AGGREGATE SIZE OF 20 mm, SLUMP OF 80±20 AND ULTIMATE COMPRESSION STRENGTH AT 28 DAYS OF 20 MPa.
3 CONCRETE SHALL BE PLACED IN ONE CONTINUOUS OPERATION AND BE COMPACTED BY EXTERNAL VIBRATION OR HAND TAMPING.
4 FOOTING EXCAVATIONS SHALL BE THOROUGHLY CLEANED OF ALL LOOSE MATERIAL BEFORE PLACING CONCRETE.
5 FOUNDING MATERIAL SHALL HAVE SAFE BEARING CAPACITY OF 75 kPa.
6 POUR SLAB ON 50mm COMPACTED SAND AND 200um POLYTHENE WATERPROOF MEMBRANE (LAPPED 200 AND SEALED WITH APPROPRIATE TAPE). OPTIONAL RECOMMENDED

STEELWORK
1 ALL STRUCTURAL FRAMING MEMBERS SHALL BE G450 GRADE STEEL AND ALL CLEATS SHALL BE G450 GRADE STEEL GALVANIZED TO MIN Z600 POSTS SHALL BE G350, REFER DRAWING.
2 ROOF SHEETING SHALL BE G550 GRADE STEEL PROTECTED WITH ZINCALUME AZ150.
3 PURLINS & BRIDGING TO BE EX. 80x40 LIPPED CRIMPED CHANNELS 0.8mm B.M.T.
4 CLADDING SHEET IS TO BE FIXED AS FOLLOWS:-
- AT EAVES WITH 1 SCREW EVERY PAN AND AT OTHER PURLINS WITH 1 SCREW EVERY SECOND PAN.

ALL SCREWS INTO ROOF SHEETING TO HAVE NEOPRENE WASHERS
5 NOTCH PURLINS AND FIX TO RAFTERS WITH 2#10 TEKS PER FLANGE EACH END.
6 SCREWS CONNECTING STRUCTURAL MEMBERS TO BE WAFERTEKS No.10 MANUFACTURED BY DEUTSCHER (OR EQUIVALENT) WITH MIN. EDGE DISTANCE OF 6mm AND MIN. PITCH OF 12mm.
7 RIDGES, BARGES AND ALL PENETRATIONS TO BE FLASHED WITH 0.4mm ZINCALUME FINISHED STEEL.
8 GUTTER AND DOWNPIPES TO BE FITTED AND DISCHARGED TO EXISTING STORMWATER SYSTEM. SPLICE GUTTER AT CENTRE OF BUILDING. PROVIDE TWO SCREWS INTO EACH WEB AND SEAL WITH SILICONE.
9 STEELWORK SHALL ALL COMPLY WITH THE REQUIREMENTS OF -
AS 1170 PARTS 1 & 2 LOADING CODES
AS 4100 STEEL STRUCTURE CODES
AS 4600 COLD FORMED STEEL STRUCTURE CODE
AS 1562 DESIGN AND INSTALLATION OF METAL ROOFING
AS 1111 / 1112 METRIC HEXAGON COMMERCIAL BOLTS AND SCREWS
AS 2313 GUIDE TO THE PROTECTION OF IRON AND STEEL
AS 3566 SELF DRILLING SCREWS FOR BUILDING & CONSTRUCTION INDS

APPROVED
L 3/1423
Consent No.

© SPANBILT (AUSTRALIA) PTY. LTD. 2000

FREDERICK R SMITH
Registered Consulting Engineer
22 Glamorgan Drive
Torbay, Auckland
Phone 09 473 1262

DES NEWPORT
Consulting Engineers Pty Ltd
208 Constance St. Fortitude Valley
Brisbane, Queensland
Phone 07 3252 9822

TOTALSPAN
Phone 0800 10 35 45

STEEL FRAMED CARPORTS
S45 (HIGH)
BASIC WIND SPEED
V=45m/sT.C.2

GABLE ROOFED CARPORT
6X6 TO 6X 30m
2.4 to 4.2mH
(nominal dimensions)

TSG 93046NZ
TSGRC/S45/2

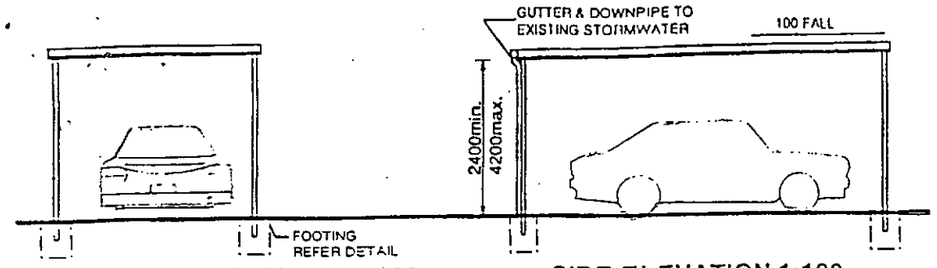

FRONT ELEVATION 1:100

SIDE ELEVATION 1:100

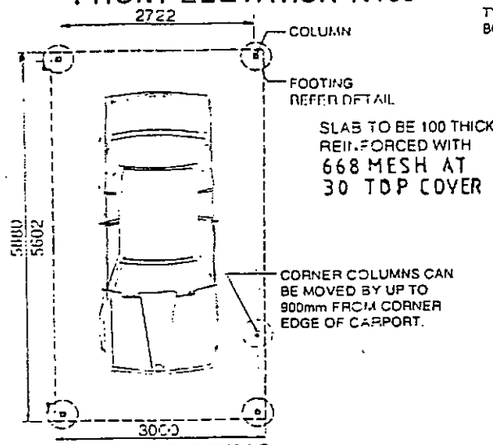

SLAB / FOOTING LAYOUT 1:100

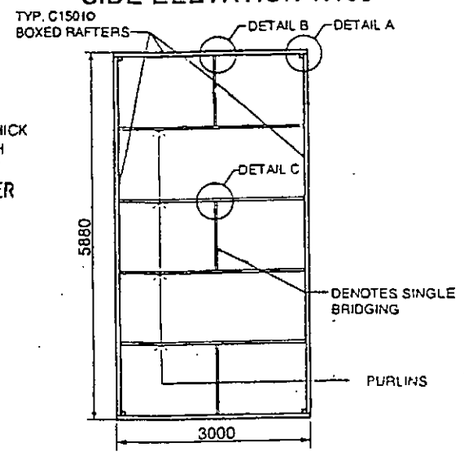

FRAMING PLAN 1:100

PURLIN SCHEDULE

1 ALL PURLINS TO BE SINGLE 80x40 CRIMPED C'S.
ALL HEIGHTS:
6 TO 30m WIDE:
3 PURLINS

3 ALL PURLINS TO BE EVENLY SPACED FROM EDGE OF RAFTERS

COLUMNS: - SHALL BE G450 SHS:
FOR 6x6 & 6x9 CARPORTS:

2.4 & 3.0mH.: 75x75x2.0
3.6mH.: 75x75x2.0
4.2mH.: 75x75x2.5
FOR 6x12 CARPORTS & OVER
INCREASE WALL THICKNESS BY 1mm.

SLAB SIZE: 5880x3000

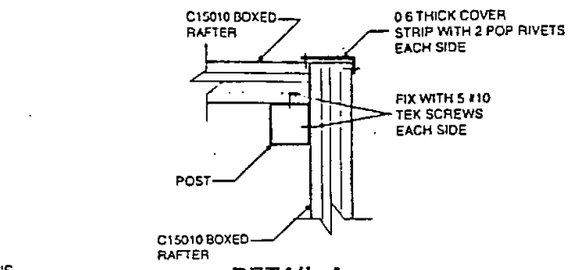

DETAIL A

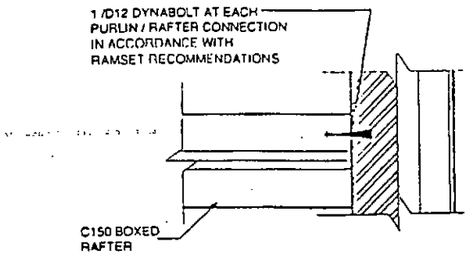

ALTERNATIVE DETAIL FOR CARPORT ABUTTING EXISTING DWELLING

1 IF AFFIXING DIRECTLY TO F/C OR TIMBER CLAD WALL USE M10 GALV. COACH SCREW INTO TIMBER STUDS
2 IT IS THE RESPONSIBILITY OF THE PURCHASER TO ASCERTAIN THAT THE STABILITY OF THE EXISTING WALL IS ADEQUATE TO SUPPORT THE ATTACHED CARPORT.
3 BOLTS MUST ONLY BE FIXED IN BRICKWORK 1200mm BELOW TOP COURSE.

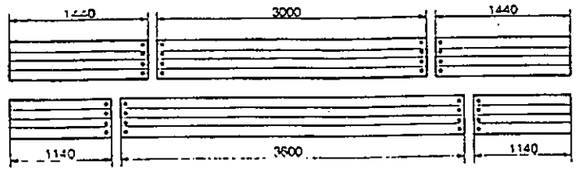

SPLICING DETAIL
(TYP. FOR SPLICED 6m LONG BEAMS)

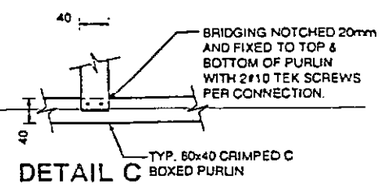

DETAIL C

GENERAL NOTES
1 DRAWINGS SHALL NOT BE SCALED FOR ANY FABRICATION OR ERECTION DETAILS.
2 AT SETOUT, DIAGONALS MUST BE CAREFULLY CHECKED TO ENSURE BUILDING IS SQUARE.

LOADINGS
1 STRUCTURE HAS NOT BEEN DESIGNED TO CARRY OCCASIONAL LOADING AS STIPULATED IN
2 WIND LOAD IN ACCORDANCE WITH
3 ROOF LIVE LOAD; - 0.25 kPa

CONCRETE
1 SERVICES OF AN EXPERIENCED CONSULTING ENGINEER SHOULD BE ENGAGED TO ADVISE ON SUITABILITY OF SOIL CONDITIONS
2 CONCRETE SHALL HAVE MAXIMUM AGGREGATE SIZE OF 20 mm, SLUMP OF 80±20 AND ULTIMATE COMPRESSION STRENGTH AT 28 DAYS OF 20 MPa
3 CONCRETE SHALL BE PLACED IN ONE CONTINUOUS OPERATION AND BE COMPACTED BY EXTERNAL VIBRATION OR HAND TAMPING
4 FOOTING EXCAVATIONS SHALL BE THOROUGHLY CLEANED OF ALL LOOSE MATERIAL BEFORE PLACING CONCRETE
5 FOUNDING MATERIAL SHALL HAVE SAFE BEARING CAPACITY OF 75 kPa.
6 POUR SLAB ON 50mm COMPACTED SAND AND 200µm POLYTHENE WATERPROOF MEMBRANE (LAPPED 200 AND SEALED WITH APPROPRIATE TAPE). - OPTIONAL RECOMMENCED

STEELWORK
1 ALL STRUCTURAL FRAMING MEMBERS SHALL BE G450 GRADE STEEL AND ALL CLEATS SHALL BE G450 GRADE STEEL GALVANIZED TO MIN Z200 POSTS SHALL BE G350, REFER DRAWING
2 ROOF SHEETING SHALL BE G550 GRADE STEEL PROTECTED WITH ZINCALUME AZ150.
3 PURLINS & BRIDGING TO BE EX. 80x40 LIPPED CRIMPED CHANNELS 0.9mm B.M.T.
4 CLADDING SHEET IS TO BE FIXED AS FOLLOWS -
- AT EAVES WITH 1 SCREW EVERY PAN AND AT OTHER PURLINS WITH 1 SCREW EVERY SECOND PAN

ALL SCREWS INTO ROOF SHEETING TO HAVE NEOPRENE WASHERS
5 NOTCH PURLINS AND FIX TO RAFTERS WITH 2#10 TEKS PER FLANGE EACH END.
6 SCREWS CONNECTING STRUCTURAL MEMBERS TO BE WAFERTEKS No.10 U.N.O. MANUFACTURED BY DEUTSCHER (OR EQUIVALENT) WITH MIN. EDGE DISTANCE OF 6mm AND MIN. PITCH OF 12mm
7 RIDGES, BARGES AND ALL PENETRATIONS TO BE FLASHED WITH 0.4mm ZINCALUME FINISHED STEEL.
8 GUTTER AND DOWNPIPES TO BE FITTED AND DISCHARGED TO EXISTING STORMWATER SYSTEM. SPLICE GUTTER AT CENTRE OF BUILDING. PROVIDE TWO SCREWS INTO EACH WEB AND SEAL WITH SILICONE.
9 STEELWORK SHALL ALL COMPLY WITH THE REQUIREMENTS OF -
AS 1170 PARTS 1 & 2 LOADING CODES
AS 4100 STEEL STRUCTURE CODES
AS 4600 COLD FORMED STEEL STRUCTURE CODE
AS 1562 DESIGN AND INSTALLATION OF METAL ROOFING
AS 1111 / 1112 METRIC HEXAGON COMMERCIAL BOLTS AND SCREWS
AS 2313 GUIDE TO THE PROTECTION OF IRON AND STEEL
AS 3566 SELF DRILLING SCREWS FOR BUILDING & CONSTRUCTION INDS

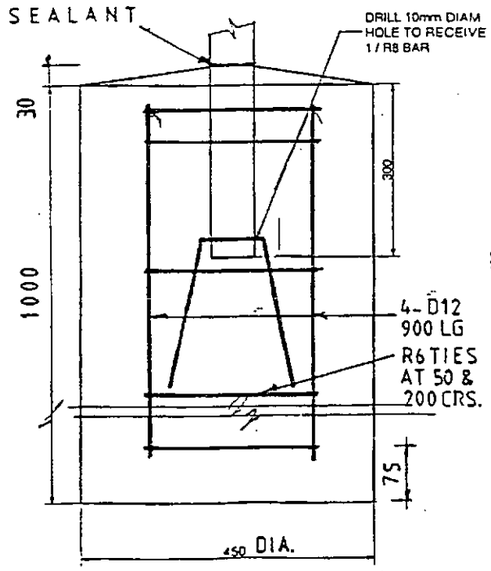

LEG CAST INTO FOOTING

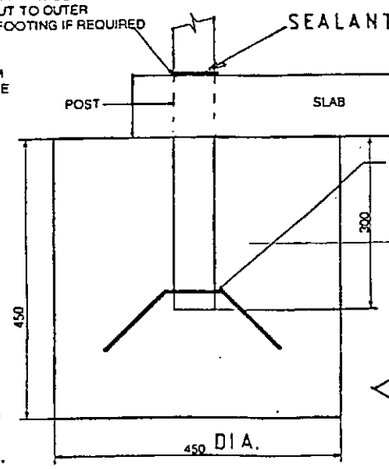

PREFERRED OPTION
LEG CAST INTO FOOTING
WITH SLAB ONTOP

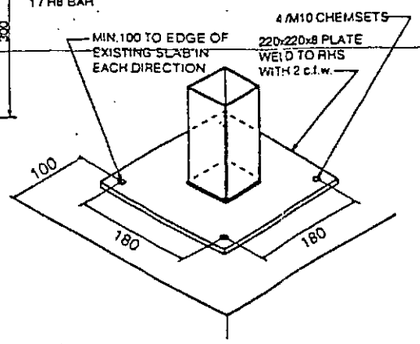

ALTERNATIVE OPTION
COLUMN FIXING TO
EXISTING SLAB

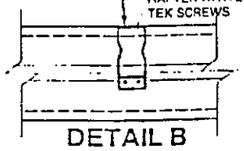

DETAIL B



TYP. C15010
BOXED RAFTER



TYP. 80x40
CRIMPED C
PURLIN

APPROVED
3/1423
Consent No.

© SPANBILT (AUSTRALIA) PTY LTD 2000

FREDERICK R SMITH
Registered Consulting Engineer
22 Glamorgan Drive
Torbay, Auckland
Phone 09 473 1262

DES NEWPORT
Consulting Engineers Pty Ltd
208 Constance St. Fortitude Valley
Brisbane, Queensland
Phone 07 3252 9822

TOTALSPAN
Phone 0800 10 35 45

STEEL FRAMED CARPORT
S45(HIGH)
BASIC WIND SPEED
V = 45 m/s T.C.2

FLAT ROOFED CARPORTS
6 x 3 m
2·4 to 4·2 m H
(nominal dimensions)

TSFS93046N
TSFR CS/S45/

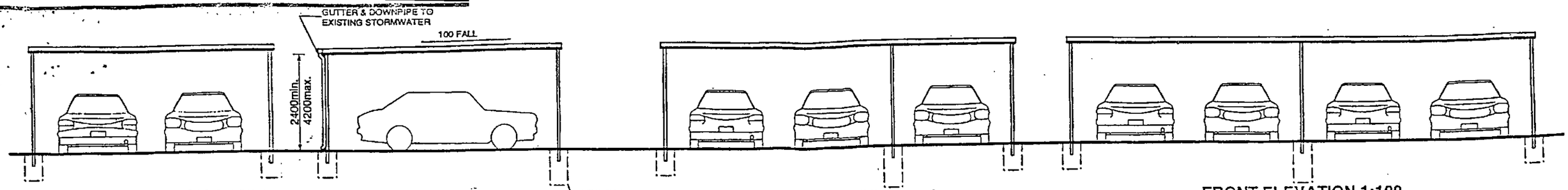

FRONT ELEVATION 1:100
TYP. DOUBLE CARPORT

SIDE ELEVATION 1:100
TYP. DOUBLE CARPORT

FRONT ELEVATION 1:100
TYP. DOUBLE CARPORT
WITH 3m EXTENSION

FRONT ELEVATION 1:100
TYP. DOUBLE CARPORT
WITH 6m EXTENSION

PURLIN SCHEDULE

1 ALL PURLINS TO BE SINGLE 80x40 CRIMPED C'S.
2 NUMBER OF PURLINS PER 3m BAY.
ALL HEIGHTS:
6 TO 30m WIDE:
4 PURLINS

3 ALL PURLINS TO BE EVENLY SPACED FROM EDGE OF RAFTERS.

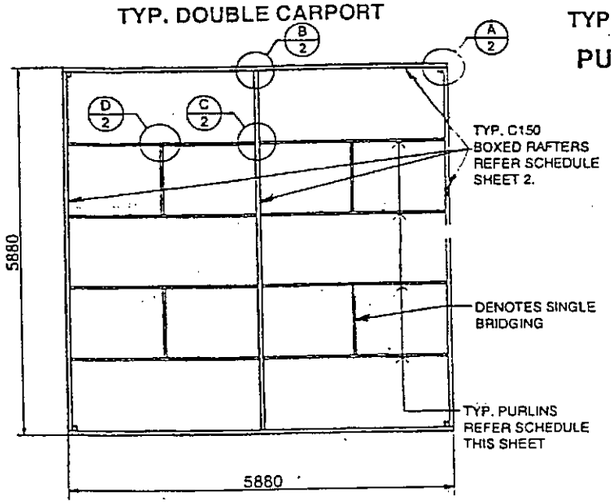

FRAMING PLAN 1:100
TYP. DOUBLE CARPORT

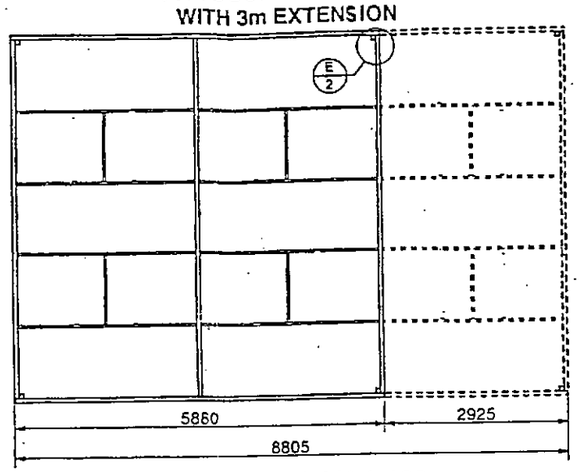

FRAMING PLAN 1:100
TYP. DOUBLE CARPORT
WITH 3m EXTENSION

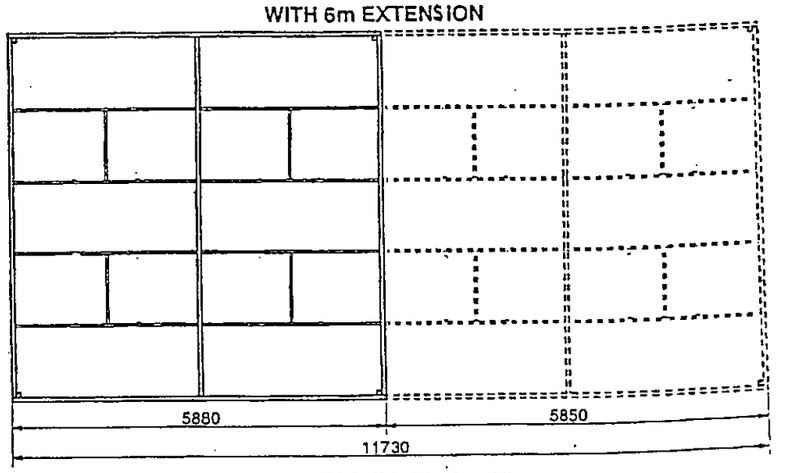

FRAMING PLAN 1:100
TYP. DOUBLE CARPORT
WITH 6m EXTENSION

SLAB SIZES

6m WIDE:	5880 x 5880
9m WIDE:	5880 x 8805
12m WIDE:	5880 x 11730
15m WIDE:	5880 x 14655
18m WIDE:	5880 x 17580
21m WIDE:	5880 x 20505
24m WIDE:	5880 x 23430
27m WIDE:	5880 x 26355
30m WIDE:	5880 x 29280

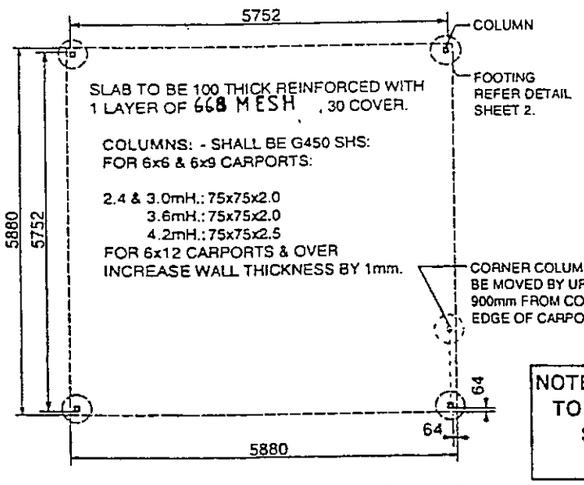

SLAB / FOOTING LAYOUT 1:100
TYP. DOUBLE CARPORT

NOTE: CARPORT & EACH EXTENTION BAY TO BE FITTED WITH PLAQUE ADVISING STRUCTURE NOT DESIGNED FOR OCCASIONAL LOADS (AS 1170.1)

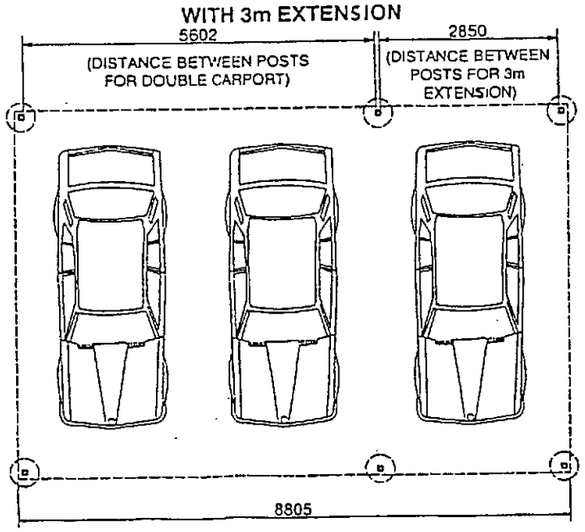

SLAB / FOOTING LAYOUT 1:100
TYP. DOUBLE CARPORT
WITH 3m EXTENSION

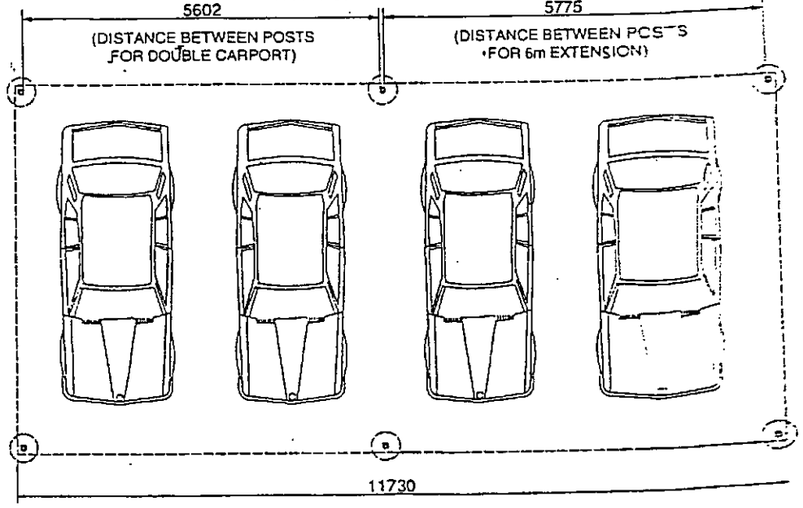

APPROVED
L 3/1423

SLAB / FOOTING LAYOUT 1:100
TYP. DOUBLE CARPORT
WITH 6m EXTENSION

© SPANBILT (AUSTRALIA) PTY. LTD. 2000

FREDERICK R SMITH
Registered Consulting Engineer
22 Glamorgan Drive
Torbay, Auckland
Phone 09 473 1262

DES NEWPORT
Consulting Engineers Pty Ltd
208 Constance St. Fortitude Valley
Brisbane, Queensland
Phone 07 3252 9822

TOTALSPAN
Phone 0800 10 35 45

STEEL FRAMED CARPORTS
S45 (HIGH)
BASIC WIND SPEED
V=45m/sT.C.2

Consent No.

ROOFED CARPORTS

6 to 30m long
2.4to4.2mH
(nominal dimensions)

TSF93046NZ
TSFRC/S45/1

Wanganui District Council

101 Guyton Street
P O Box 637, Wanganui
Phone: (06) 349 0001
Fax: (06) 349 0000
Email: wdc@wanganui.govt.nz
Web: www.wanganui.govt.nz

CODE COMPLIANCE CERTIFICATE NUMBER BC3/1423

Section 43(3), Building Act 1991

Mr M Ashworth
12 Downes Ave
WANGANUI 5001

Building Consent No: BC3/1423

Issue Date: 22/08/2005

Project Location	***Assessment Number/Legal Description***
12 Downes Ave WANGANUI 5001	LOT 17 DP 58510 0.0619 Ha
Type of Work	***Description of Work***
Carport	Erect new carport attached to existing garage
Intended Life	***Estimated Value***
15 years	$3500.00

This is a final Code Compliance Certificate issued in respect of all of the building work under the above Building Consent.

Signed for and on behalf of the Wanganui District Council:

A J Jamieson
Team Leader Building Service
Environmental Services Business Unit

Date: 22 August 2005