Kaipara District Council
Unit 6 - The Hub, 6 Molesworth Drive, Mangawhai 0505
buildingsupport@kaipara.govt.nz
(09) 439 3123

BC170701

Alpha ID: 170701
Application Type: Building Consent with PIM
Site Address: 866 Omamari Road Omamari
Project Description: Bathroom Renovation, Heat pump installation
Project Status: Application Received

Creation Date: 29 November 2018

Table of Contents

Lodged Documents

Form 2: Application for Project Information Memorandum and/or Building Consent . . . 1
PLG 1 Application . . . 6
Certificate of title - COT.pdf . . . 8
Plans - B448_-_PLANS_BC_ISSUE_-_07.11.17.pdf . . . 10
Restricted building work memorandums Owner-builder declaration - DDS_-_LBP_Form_-_07.11.17..pdf . . . 19
Specifications - St_Michel_-_Wall_Hung_Vanity_Installation.pdf . . . 25
Specifications - B320_-_Specs_Book.pdf . . . 27
Specifications - Tarkett_Safe-T_Vinyl_Flooring_-_Wetroom_Installation_Guide.pdf . . . 57
Specifications - GIB-Aqualine-Wet-Area-Systems-Installation_Booklet-2007.pdf . . . 69
Specifications - JH_Hardie_Glaze_Installation_Manuel.pdf . . . 94
Approvals from other authorities - B448_-_DDS_AGent_Form.pdf . . . 118

Vetting

Request For Further Information - Vetting 1 . . . 119

Development Contributions, RMA, PIM

PIM . . . 121

Building Consent

Form 5: Building Consent . . . 125
Plans - 170701_PL_20171215_ISSUE.pdf . . . 134
Specifications - 170701_SP_20180111_ISSUE.pdf . . . 144

Inspections

Inspection Report 1 - Framing Pre-wrap . . . 235
Inspection Report 2 . . . 237
Inspection Report 3 - Final . . . 239

Code Compliance Certificate

Form 6: Application for Code Compliance Certificate . . . 241
Form 7: Code Compliance Certificate . . . 246

Emails

Email_170701_RE_BC170701.1_Form_5_Building_Consent_-_866_Omamar_20180111.pdf . . . 248
Email_170701_RE_BC170701_866_Omamari_Road_Omamari_20180905.pdf . . . 250
Email_170701_Documentation_Copies_20180906.pdf . . . 252

Sent Emails

Email_170701_BC170701.1_Request_For_Further_Information_-_Vetti_20171114.pdf . . . 253
Email_170701_BC170701_A_new_job_for_you_20171127.pdf . . . 254
Email_170701_BC170701.1_PIM_-_866_Omamari_Road_Omamari_20171128.pdf . . . 255
Email_170701_BC170701.1_Form_5_Building_Consent_-_866_Omamari_R_20171215.pdf . . . 256
Email_170701_RE_RE_BC170701.1_Form_5_Building_Consent_-_866_Oma_20180111.pdf . . . 257
Email_170701_BC170701_A_new_email_has_been_allocated_to_you_20180111.pdf . . . 258
Email_170701_BC170701_866_Omamari_Road_Omamari_20180111.pdf . . . 259
Email_170701_BC170701_Inspection_Report_20180628.pdf . . . 261

Email_170701_BC170701_Inspection_Report_20180905.pdf 262
Email_170701_BC170701_866_Omamari_Road_Omamari_20180905.pdf 263
Email_170701_BC170701_866_Omamari_Road_Omamari_20180905_002.pdf 264
Email_170701_RE_RE_BC170701_866_Omamari_Road_Omamari_20180905.pdf 265
Email_170701_BC170701_A_new_email_has_been_allocated_to_you_20180905.pdf 266
Email_170701_RE_Documentation_Copies_20180906.pdf 267
Email_170701_BC170701_Inspection_Report_20181017.pdf 268
Email_170701_170701.1_Form_7_Code_Compliance_Certificate_-_866__20181017.pdf 269

Building Consent Application: 10007298MQ

Date Submitted: Thursday, 09 November 2017

Application Type

	Building Consent only
Certificate of Title:	Uploaded by Applicant

Application Details

Reference Key:	**10007298MQ**
Name:	Angela Russell
Application Role:	Agent

The Building

Site Address:	866 Omamari Road, Omamari, 0373

Legal Description:

LOT 1 DP 206909

Description of Building Work:	Bathroom Renovation, Heat pump installation
Is this title currently subject to subdivision?:	N/A

The Owner

Owner's Name:	**Ereni Clark**
Contact Person:	Ereni Clark
Mailing Address:	866 Omamari Road, Omamari 0373
Street Address:	866 Omamari Road, Omamari, 0373
Phone:	Landline: 094396433 Mobile: N/A
Email:	N/A

The Agent

Agent's Name:	**Design Draughtins Solutions Ltd**
Contact Person:	Angela Russell
Mailing Address:	10 Eden Tce, Kamo, Whangarei 0112
Street Address:	10 Eden Tce, Kamo, Whangarei, 0112
Phone:	Landline: 02108442666 Mobile: N/A
Email:	info@designhomes.co.nz

Application

By typing your name in the box below you are giving your authority for the application to proceed to processing and accept the associated charges. You will be treated as first point of contact for all correspondence that relates to this application and building work.

I request that you issue a building consent for the building work described in this application.

Signature of Agent on behalf of and with the authority of the owner:

ANGELA RUSSELL
9 Nov 2017

The Project

Building Type:	Residential
Building Classification:	2.0 Housing: 2.0.2 Detached Dwelling
Current, lawfully established, use:	SR (Sleeping Residential)
Existing Floor Area:	149.50 square metre(s)
New Floor Area:	0.00 square metre(s)
Total Floor Area:	149.50 square metre(s)
Intended Life:	50 years
Year First Constructed:	1969
Previous Building Work:	N/A
Estimated Value of Building Work:	$10,000.00
Owner-builder carrying out the restricted building work:	No
Does your project involve a Cable Car?	NO
Does your project involve building over boundaries?	NO
Waiver / Modification Required:	N/A

Restricted Building Work: Yes

Means of Compliance with the New Zealand Building Code

B1 - Structure	AS1
B2 - Durability	AS1
E3 - Internal Moisture	AS1
G9 - Electricity	AS1
G12 - Water Supplies	AS1
G13 - Foul Water	AS1

Licensed Building Practitioners

Name:	**Evan Russell**
LBP Number:	BP117027
Company:	Design/Design 2
Contact:	094353390
Email:	info@designhomes.co.nz
Address:	10 Eden Terrace, Kamo, Northland, Whangarei, 0112

Site Personnel / Other Contacts

Name:	**N/A**
Registration No.:	N/A
Company:	N/A
Contact:	N/A
Email:	N/A
Address:	

Name:	**N/A**
Registration No.:	N/A
Company:	N/A
Contact:	N/A
Email:	N/A
Address:	

Name:	**N/A**
Registration No.:	N/A
Company:	N/A
Contact:	N/A
Email:	N/A
Address:	

Name:	**N/A**
Registration No.:	N/A
Company:	N/A
Contact:	N/A
Email:	N/A
Address:	

Name:	**Evan Russell**
Registration No.:	BP117027
Company:	Design/Design 2
Contact:	094353390
Email:	info@designhomes.co.nz
Address:	10 Eden Terrace, Kamo, Northland, Whangarei,

0112

Miscellaneous Information

Does the project relate to a natural disaster?	No
Will there be a dog on site during construction?	No
Is there a swimming/spa pool on this site?	No

First Point of Contact

AGENT

10 Eden Tce Kamo Whangarei

02108442666

info@designhomes.co.nz

Invoice and Fees Charge To

AGENT

10 Eden Tce Kamo Whangarei

02108442666

info@designhomes.co.nz

Attachments

Certificate of Title

1. COT.pdf (531.89K)

Plans

1. B448_-_PLANS_BC_ISSUE_-_07.11.17.pdf (883.61K)

Restricted Building Work Memorandums / Owner-Builder Declaration

1. DDS_-_LBP_Form_-_07.11.17..pdf (413.43K)

Specifications

1. St_Michel_-_Wall_Hung_Vanity_Installation.pdf (157.26K)
2. B320_-_Specs_Book.pdf (446.17K)
3. Tarkett_Safe-T_Vinyl_Flooring_-_Wetroom_Installation_Guide.pdf (1.27M)
4. GIB-Aqualine-Wet-Area-Systems-Installation_Booklet-2007.pdf (1.35M)
5. JH_Hardie_Glaze_Installation_Manuel.pdf (2.00M)

Approvals from Other Authorities

1. B448_-_DDS_AGent_Form.pdf (137.38K)

Comments / Other Information:

N/A

FORM PLG 1

National Environmental Standard (NES) for Assessing and Managing Contaminants in Soil to Protect Human Health

(Please note that any inaccuracies may result in the applicant being in breach of the Resource Management Act 1991 and/or exposed to liability if the site is subsequently found to be contaminated, including being liable for remedial works. For assistance in answering these questions please refer to PLG 1A - refer to http://goo.gl/Ndbj43.)

Is the building work and all associated activities:

Changing the use of the land? No

(Please note that "changing the use of the land" includes erecting a dwelling on an area of land which previously had no dwelling erected upon it.)

Disturbing soil? No

(more than 25m3 per 500m2 of land) or removing soil? (more than 5m3 per 500m2 of land) (e.g.: foundations, on-site effluent treatment and disposal systems, wells or bores)

For more information on this process please contact the Duty Planner on 09 439 3123 or go the Ministry for the Environment website: http://www.mfe.govt.nz/laws/standards/contaminants-in-soil/

Building Consent Application: 10007298MQ

Date Submitted: Thursday, 09 November 2017

FORM PLG 1

National Environmental Standard (NES) for Assessing and Managing Contaminants in Soil to Protect Human Health

For assistance in answering these questions please refer to (PLG 1A)

Please note that any inaccuracies may result in the applicant being in breach of the Resource Management Act 1991 and/or exposed to liability if the site is subsequently found to be contaminated, including being liable for remedial works.

Is the building work and all associated activities:

Changing the use of the land? **NO**
(Please note that "changing the use of the land" includes erecting a dwelling on an area of land which previously had no dwelling erected upon it.)

Disturbing soil? **NO**
(more than 25m3 per 500m2 of land) or removing soil? (more than 5m3 per 500m2 of land) (e.g.: foundations, on-site effluent treatment and disposal systems, wells or bores)

For more information on this process please contact the Duty Planner on 347 2868 or go the Ministry for the Environment website: http://www.mfe.govt.nz/laws/standards/contaminants-in-soil/

Signature

The name below as AGENT has the authority for the application to proceed to processing and accept the associated charges.

Signed By:

Angela Russell

9 Nov 2017

The Agent will be the first point of contact for communications with the Council/Building Consent authority regarding this application / building work and will receive all correspondence including all invoices.

COMPUTER FREEHOLD REGISTER UNDER LAND TRANSFER ACT 1952

Search Copy

R.W. Muir
Registrar-General
of Land

Identifier	**NA135B/344**
Land Registration District	**North Auckland**
Date Issued	20 April 2001

Prior References
NA85A/542

Estate	Fee Simple
Area	5707 square metres more or less
Legal Description	Lot 1 Deposited Plan 206909

Proprietors
Robert Paul Clark and Ereni Winnie Clark

Interests

Subject to Part IV A Conservation Act 1987

Subject to Section 11 Crown Minerals Act 1991

Appurtenant hereto is a right of way and a right to drain sewage specified in Easement Certificate D595546.3 - produced 11.4.2001 at 2.43 and entered 20.4.2001 at 9.00 am

The easements specified in Easement Certificate D595546.3 are subject to Section 243 (a) Resource Management Act 1991

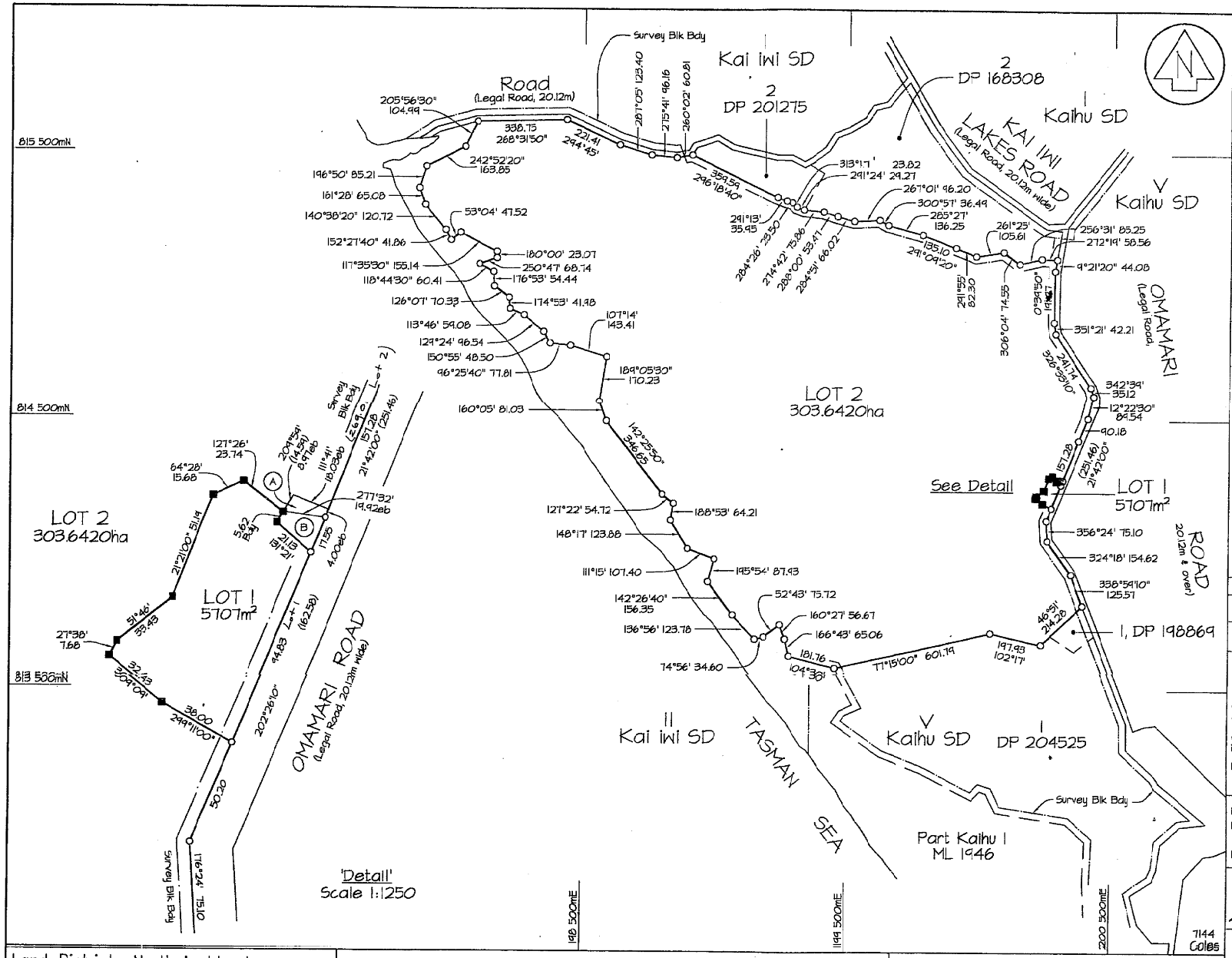

Approvals

P B Coles .....

R J Coles .....

T D Morris .....

Registered Owner(s)

I hereby certify that this Plan was approved by the Kaipara District Council pursuant to Section 223 of the Resource Management Act 1991 on the 28th day of March 2001 subject to the granting or reserving of easements set out on the Memorandum hereon.

Authorised Officer
(RM 001110)

Memorandum of Easements

Purpose	Shown	Servient Tenement	Dominant Tenement
Right to Drain Sewage	A	Lot 2 Hereon	Lot 1 Hereon
Right of Way & Right to Drain Sewage	B		

'Subject to Section 11 Crown Minerals Act 1991'
'Subject to Part IVa Conservation Act 1987'

New C'sT Allocated:

Lot 1 CT 135B/344 Lot 2 CT 135B/345

Class of Survey: Lot 1 Class I Lot 2 Class III

Total Area 304.2127ha

Comprised in CT85A/542 (all)

I, Bryce Rodney Woodward of Whangarei being a person entitled to practise as a registered surveyor, certify that–
(a) The surveys to which this dataset relates are accurate, and were undertaken by me or under my direction in accordance with the Survey Act 1986 and the Survey Regulations 1998.
(b) This dataset is accurate, and has been created in accordance with that Act and those Regulations.

Dated at Whangarei this 2nd day of April 2001

Signature .....

Field Book.....p.....Traverse Book.....p.....
Reference Plans SO 40361, SO 40359

Examined ..... Correct ..... Accredited .....

Approved as to Survey

20/4/2001

Deputy Chief Surveyor

Deposited this 20th day of April 2001

for Registrar General of Land

File Received Instructions 1 APR 2001

DP 206909

Approved AKLM 00/4

Land District North Auckland
Survey Block & District II Kai iwi
NZMS 261 Sheet Rcd Map No

Plan of Lots 1 & 2 being a Subdivision of Sections 1 & 11 Block II Kaiiwi Survey District

Territorial Authority Whangarei District
Surveyed By Reyburn & Bryant
Scale 1:10,000 Date February 2001

Richard Simpson, Reyburn & Bryant 1999 Ltd 01-02-01 9:44 AM RS71444 Coles.dwg

Micro Record Bureau Ltd. DATA CONVERSION
30 APR 2001

PROPOSED RESIDENTIAL ALTERATION

Project facilitated by

accessable
ENVIRONMENTAL HEALTH MANAGEMENT SERVICES

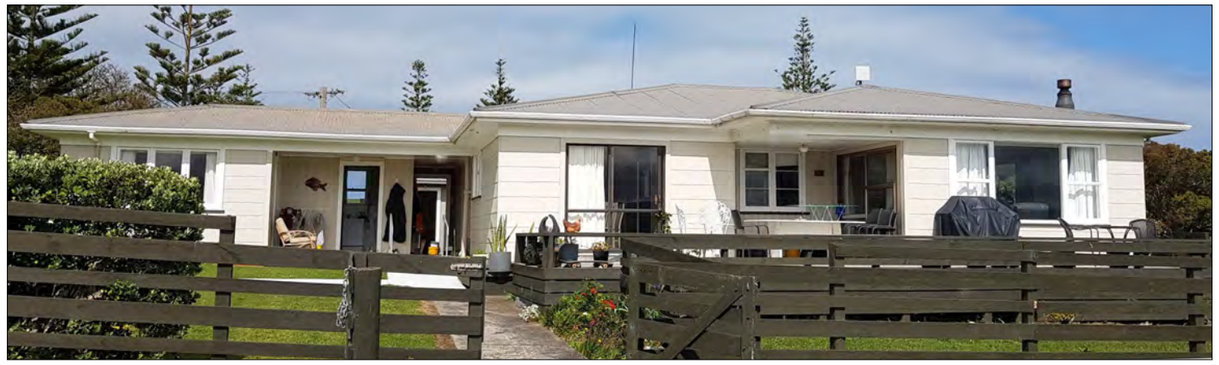

866 Omamari Rd

Dargaville

LOT 1 DP 206909

Drawing Index

1	Cover Page
2	Floorplan - Existing / Proposed
3	Proposed New Floorplan
4	Proposed Bathroom Layout
5	Bathroom Elevation 1
6	Bathroom Elevation 2
7	Bathroom Elevation 3
8	Bathroom Elevation 4
9	Wet Area Details

PRELIMINARY TENDER SET

DESIGN DRAUGHTING SOLUTIONS LIMITED
For all of your Draughting and Designing needs.
info@designhomes.co.nz PH 09 435 3390 10 Eden Tce, Kamo, Whangarei

office job no. B448

866 Omamari Rd
Dargaville .

ACC funded accessible home modification on behalf of:
accessable completed by Design Draughting Solutions Ltd,

accessable ENVIRONMENTAL HEALTH MANAGEMENT SERVICES

issue	date	drawn	revision notes
1	19/10/17		TDS
2	07/11/17	Evan Russell	BC ISSUE

job no. B448

Cover Page

A3 Set.. Page No. 1

DRAWINGS + DOCUMENTATION REMAIN THE PROPERTY OF ACCESSABLE | DO NOT SCALE OFF DRAWINGS | CONTRACTOR MUST CHECK + VERIFY DISCREPENCIES, DIMENSIONS + LEVELS ON SITE PRIOR TO COMMENCING WORK | DRAWINGS ARE INDICATIVE ONLY OF WORK TO BE DONE + ARE TO BE READ IN CONJUNCTION WITH SPECIFICATION + PRODUCT LITERATURE | ALL WORK TO COMPLY WITH RELEVANT STANDARDS

Legend:

- Existing Walls
- Walls to be Removed
- Smoke Alarm minimum requirement
- * Exempt Works under Schedule 1 of the Building Act 2004

GENERAL DEMOLITION NOTES:

1. Contractor to visit site during tendering to confirm exact scope of demolition works.
2. It is the responsibility of the Contractor to identify all demolition work for all trades and allow for their removal.
3. Remove and/or demolish elements means to demolish and clear off site completely.
4. Refer to all other drawings in Contract Documents to establish scope of demolition.
5. This drawing to be read in conjunction with the relevant clauses of the Specification.
6. Support all existing works as required during demolition.
7. Maintain weather tightness and security of building during demolition.
8. Notify Design Draughting Solutions Ltd. immediately if Borer is discovered.
9. Notify Design Draughting Solutions Ltd. immediately if timber rot is discovered.
10. Notify Design Draughting Solutions Ltd and WorkSafe, immediately if Asbestos is discovered.
11. Allow to salvage Items being removed to return to owner if requested

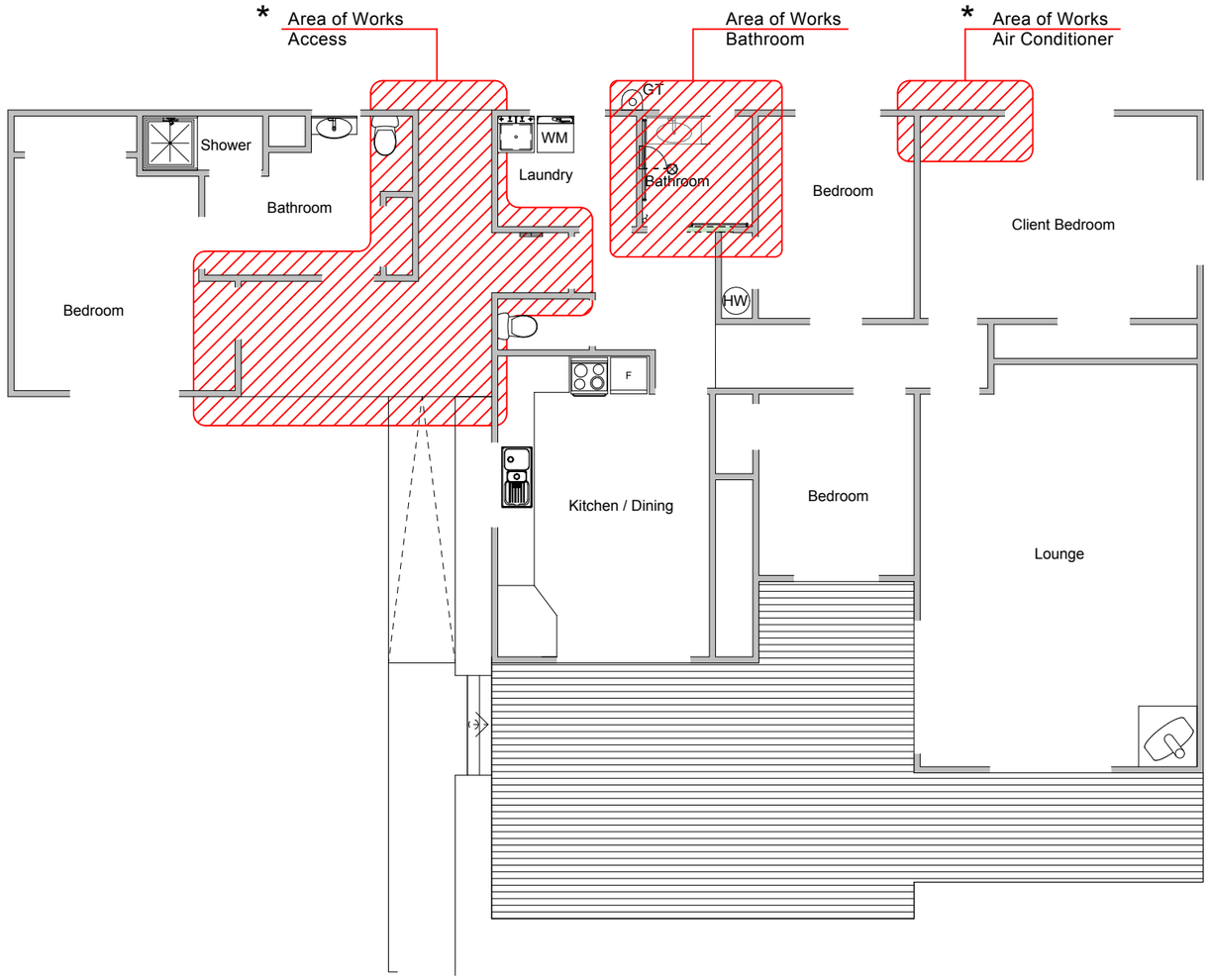

1 Existing Layout 1:100

PRELIMINARY TENDER SET

DESIGN DRAUGHTING SOLUTIONS LTD
For all of your Draughting and Design Needs
info@designhomes.co.nz PH 09 435 3390 10 Eden Tce, Kamo, Whangarei

office job no. B448
866 Omamari Rd
Dargaville .

ACC funded accessible home modification on behalf of:
accessable completed by Design Draughting Solutions Ltd,

accessable ENVIRONMENTAL HEALTH MANAGEMENT SERVICES

issue	date	drawn	revision notes
1	19/10/17		TDS
2	07/11/17	Evan Russell	BC ISSUE

job no. B448
Floorplan - Existing / Proposed
A3 Set.. Page No. 2

DRAWINGS + DOCUMENTATION REMAIN THE PROPERTY OF ACCESSABLE | DO NOT SCALE OFF DRAWINGS | CONTRACTOR MUST CHECK + VERIFY DISCREPENCIES, DIMENSIONS + LEVELS ON SITE PRIOR TO COMMENCING WORK | DRAWINGS ARE INDICATIVE ONLY OF WORK TO BE DONE + ARE TO BE READ IN CONJUNCTION WITH SPECIFICATION + PRODUCT LITERATURE | ALL WORK TO COMPLY WITH RELEVANT STANDARDS

Legend:

- Existing Walls
- Proposed New Walls
- Smoke Alarm minimum requirement
- * Exempt Works under Schedule 1 of the Building Act 2004

GENERAL NOTES:

Existing site and house plans are indicative only and are solely intended for the use of this modification only.
All work shall comply with the Building Code and all relevant city council by laws, NZS 3604: 2011 and all relevant standards.

Exempt Works - All items marked as Exempt Works under Schedule 1 of the Building Act 2004, are not requiring Council Consent / Inspection, but must be part of Tender as is works required of Builders / Contractors.

Builder to Check and Verify all Materials Prior to Construction or Purchase, for the Compatibility of such to Ensure the Installation is Correct as per Manufacturers Instructions.

Builder to verify Manufacturers specifications as All Details are Indicative Only and do not Supercede Manufacturers Instructions and/or Installation procedure

Reinstatement of Existing Fixtures - Any fixtures tagged to be removed then reinstated, contractor is to allow to apply for a variation to replace such fixtures in the event that an item is damaged on removal, or if the item is significantly deteriorated and cannot be reinstated.

Electrical Supply - The present status of the electric distribution board in the house and wiring to the project area shall be reviewed for NZBC and NZS 3000 compliance. If not it must be upgraded to comply with all the relevant NZBC codes and Standards. RCD devices are to be installed on all projects where new electric supply or switching is proposed also any existing devices that are in or surrounding a wet area/zone that we are modifying shall also be upgraded to include RCD.

Smoke detectors - Smoke detectors must be installed to comply with NZBC F7/AS1, if not already in place.

Proposed Plumbing drainage - services to be connected to existing waste pipes, reconfigure traps to suit. As per Part 2 of Schedule 1 of the NZ Building Act. unless stated otherwise.

Bathroom modifications

1 Where a bathroom wall is removed between bathroom and WC or other room to make a larger bathroom that the entire ceiling is replaced with Gib aqualine

2 Existing Windows Builder is to ensure the glazing in the bathroom is to be Obscured "A" grade Safety Glass Installed into Existing Frames, in accordance with NZS 4223 Part 3 1999. allow to replace.

3 Tempering devices must be installed on all projects with new shower facilities if they are not present, new tempering device to comply with NZBC G12/AS1 Paragraph 6.14.2 a) and NZS 4617 or AS 1357.2.

4 When installing new shower mixer, ensure mixer is suitable for existing/proposed water system ie: for all low pressure supply systems a flow test must be taken before and after the modifications and no reduction in flow is allowed. All tapware & mixers supplied & installed by the contractor must suit the clients existing water system. If for any reason this cannot be achieved, DDS Ltd is to be notified immediately by the contractor.

5 Builder is to ensure and confirm that the existing lights are suitable for a Wet room having a minimum rating of 'IP14' allow to replace to suit

6 Contractor to install 2/290x45 solid nogging behind Shower area to allow for placement of fixtures such as handrails etc to be installed at a height to match other rails, unless stated otherwise.

7 Contractor to install seismic restraint to existing HWC if not already installed

Doorway Modification - Where a doorway is modified in a timber framed plasterboard wall that ~

1. Where the wall is painted that the entire wall is painted finishing at corners of opposing walls.

2. Where the wall is wall papered that all 4 walls are re wallpapered for consistency.

Make good all damaged or disturbed areas caused by new works.

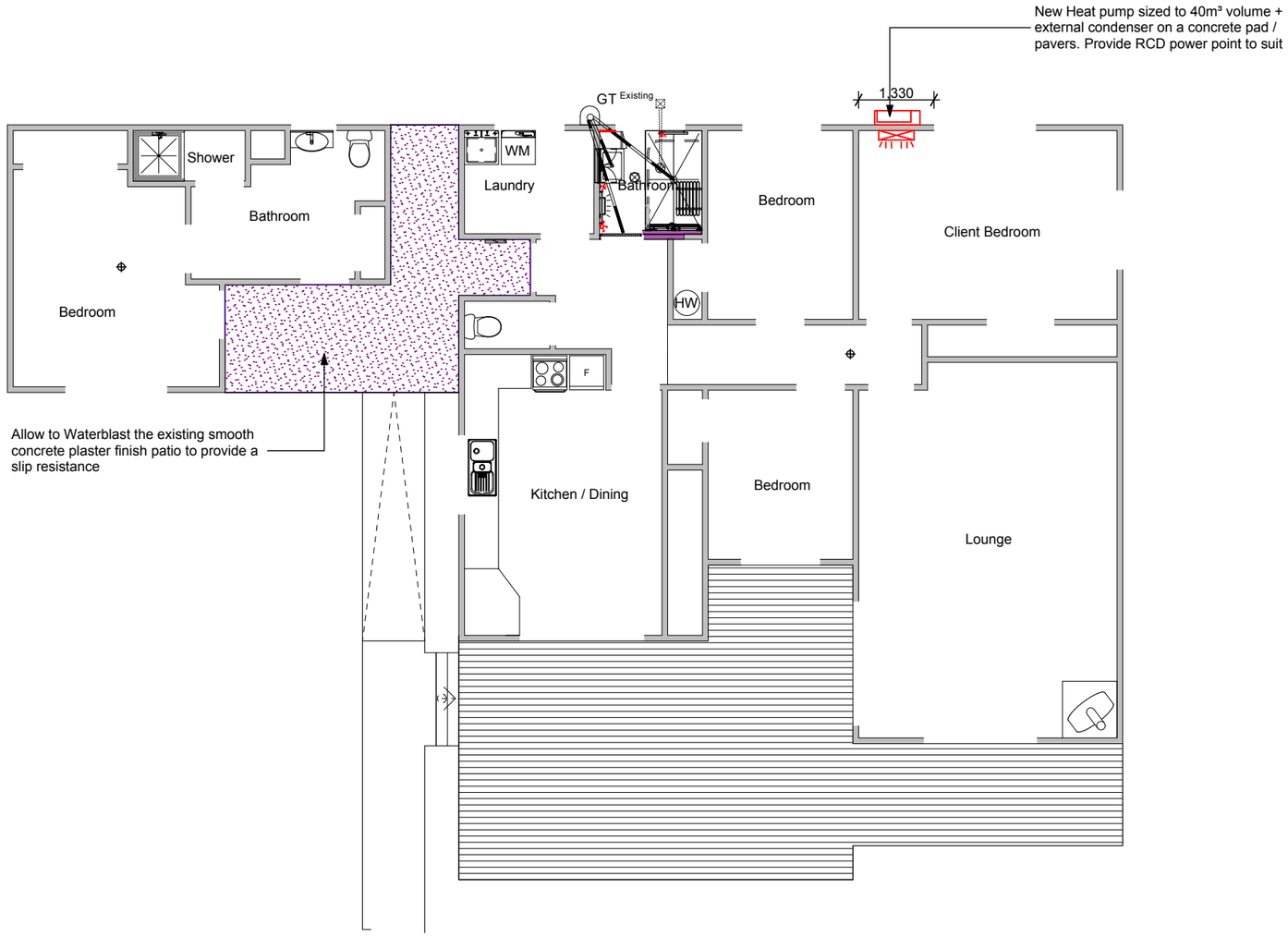

1 Proposed Modifications 1:100

PRELIMINARY TENDER SET

DESIGN DRAUGHTING SOLUTIONS LTD
For all of your Draughting and Design Needs
info@designhomes.co.nz PH 09 435 3390 10 Eden Tce, Kamo, Whangarei

office job no. B448
866 Omamari Rd
Dargaville .

ACC funded accessible home modification on behalf of:
accessable completed by Design Draughting Solutions Ltd,

issue	date	drawn	revision notes
1	19/10/17		TDS
2	07/11/17	Evan Russell	BC ISSUE

job no. B448
Proposed New Floorplan
A3 Set.. Page No. 3

DRAWINGS + DOCUMENTATION REMAIN THE PROPERTY OF ACCESSABLE | DO NOT SCALE OFF DRAWINGS | CONTRACTOR MUST CHECK + VERIFY DISCREPENCIES, DIMENSIONS + LEVELS ON SITE PRIOR TO COMMENCING WORK | DRAWINGS ARE INDICATIVE ONLY OF WORK TO BE DONE + ARE TO BE READ IN CONJUNCTION WITH SPECIFICATION + PRODUCT LITERATURE | ALL WORK TO COMPLY WITH RELEVANT STANDARDS

Legend:

- Existing Walls
- Proposed New Walls
- Smoke Alarm minimum requirement
- * Exempt Works under Schedule 1 of the Building Act 2004
- Line indicates Tarkett wet wall linings "Protectwall" 1.5mm - Installed as per manufacturers instructions. onto New Aqua Gib.

Fan Heater	Goldair Heater GBH 250 Wall mounted Fan Heater set 2.0m High, Power supply switch set at 1200mm from FL level.
Heated Towel Rail	Goldair 5 Bar Ladder Rail 50 watts Stainless Steel - SKU: 165850 Model: GLTR5C. (630mm wide x 570mm High) Supplied from Mitre 10
Towel Rail	Miles Nelson 025 19mmØ. Towel rail tubing with 107 End Flanges, Length to suit. (Sourced from Bunnings Warehouse)

Hot Water Cylinder:

1 Fix Seismic restraints to the existing cylinder Plus Tempering Valves, as required as per NZBC requirements. Plumber to check.
2 Plumber to verify if existing water pressure is adequate for the proposed works and quote separately (with Tender) if additional works is required to allow adequate pressure.
3 It is the contractors responsibility to ensure the water pressure is no worse after the modification than before the modification.

1 Tarkett wet wall linings "Protectwall" 1.5mm

2 Paint All Walls (within works) plus Ceiling to match the existing

3 Allow to replace the existing ceiling + replace insulation if present where internal walls have been removed

4 Door removal of the existing Block with new Studs and line with New Gib wall linings Make good both sides (Wall paper / Paint to match the existing)

Note//

- Cold water medium pressure
- Hot water Low pressure (requires mitigation by Plumber for New shower)

Bathroom Fixtures and fittings

Wet Area Shower	1050x1750 Formed Wet Area Shower. Cut into existing floor joists + Formed fall to central drainage point set 1:50 min. Gradent fall below Floor Level.
Floor Waste (Vinyl)	Allproof Revolver Easyclean Waste, REVCPV 50mm, with clamping ring and chrome grate installed as per manufacturers instructions
Shower Head + Slide	Superquip SS Slide Shower Safety Ø32mm T-Rail configuration, 900mm Long. Set 1100mm above FL, installed as per manufacturers instructions. Include a hand held rose and a shower hose at 1.5m long installed and Set low. Fix rail to solid nogs/studs centre
Shower Mixer	Felton Reflex Shower Mixer. Set 900mm above floor level. Builder / Plumber is to confirm suitability and type before instalment
Shower Curtain + Rail	'Watertight Down-Under' 2m min length weighted drop curtain + over head track. Set track to allow 300mm gap above and bottom edge to touch floor level. Allow for custom made length if required depending on existing ceiling height. Colour to owners selection
Towel Rail	Superquip 600mm wide to be installed as a towel rail, set at 1.0m from floor level. Install onto solid nogging/studs Code : 030/304HD600
Shower Caddie	Proprietary Shower caddie installed with suction cups
Shower Seat	New 600mm wide Folding shower seat with fold down legs. SuperQuip Code 077/304/600PL/LEGS Ensure Solid nogging + set at 450mm AFL. Install 2/290x45 x 2 Solid nogging for seat support.
Wet Area Linings	Tarkett wet wall linings "Protectwall" 1.5mm - Installed as per manufacturers instructions. onto New Aqua Gib. New wet wall lining Colour to owners specification
Floor Covering/Lining	Install Slip resistant Tarkett Granite Safe-T flooring with 200mm coved up stand. Colour to be selected by Owner / Client. Note// details supplied does not superceed the manufacturers instructions. Installer is to be a Jacobsen's approved applicator
Vanity / Basin	New Proposed Ceraform 600w Galaxy wall hung vanity. Complete with a SS. Bottle trap. Basin set 850mm AFL.
Vanity / Basin Mixer	Single lever Basin mixer Tap - 'Foreno Mana' Code MN02C - Supplied by Mitre 10
Wall Tower	Ceraform Wall Hung Mini Tower (850H x 300W x 400mmD) Set height to suit client under the existing window.
Recessed Mirrored Cabinet	St Michael Dante Plus 600.mirrored cabinet Code - "88101-W"
Ceiling Extractor Fan	Selected in line ventilation. Manrose / Simx in line fan 100mm MFP100F 69l/s,250m3/hr, to be Vented through Soffit. Order number # FAN2049 (or alternative to better suit this application)

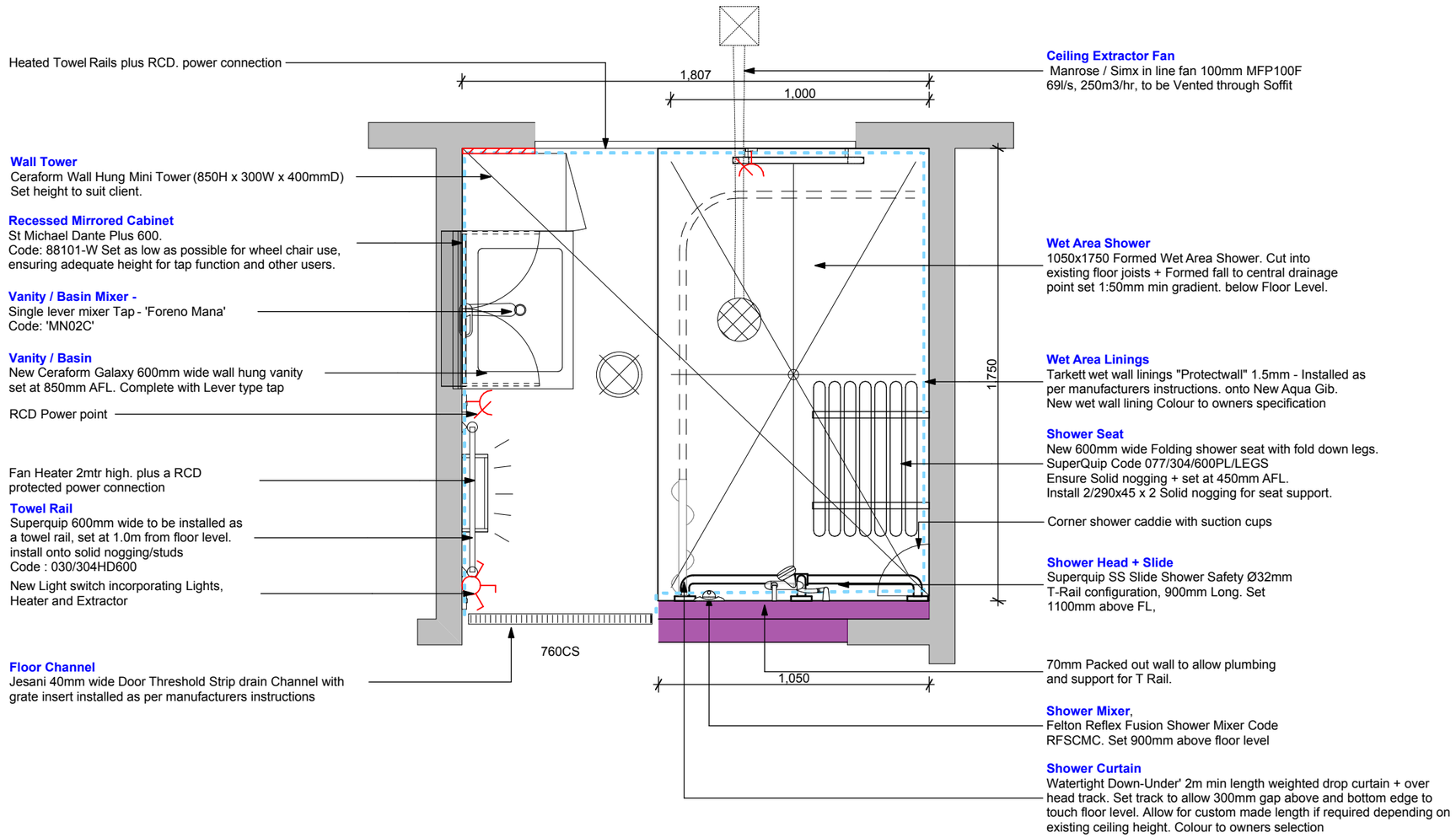

1 Proposed Bathroom 1:20

PRELIMINARY TENDER SET

DESIGN DRAUGHTING SOLUTIONS LTD
For all of your Draughting and Design Needs
info@designhomes.co.nz PH 09 435 3390 10 Eden Tce, Kamo, Whangarei

office job no. B448
866 Omamari Rd
Dargaville .

ACC funded accessible home modification on behalf of:
accessable completed by Design Draughting Solutions Ltd,

accessable ENVIRONMENTAL HEALTH MANAGEMENT SERVICES

issue	date	drawn	revision notes
1	19/10/17		TDS
2	07/11/17	Evan Russell	BC ISSUE

job no. B448
Proposed Bathroom Layout
A3 Set.. Page No. 4

DRAWINGS + DOCUMENTATION REMAIN THE PROPERTY OF ACCESSABLE | DO NOT SCALE OFF DRAWINGS | CONTRACTOR MUST CHECK + VERIFY DISCREPENCIES, DIMENSIONS + LEVELS ON SITE PRIOR TO COMMENCING WORK | DRAWINGS ARE INDICATIVE ONLY OF WORK TO BE DONE + ARE TO BE READ IN CONJUNCTION WITH SPECIFICATION + PRODUCT LITERATURE | ALL WORK TO COMPLY WITH RELEVANT STANDARDS

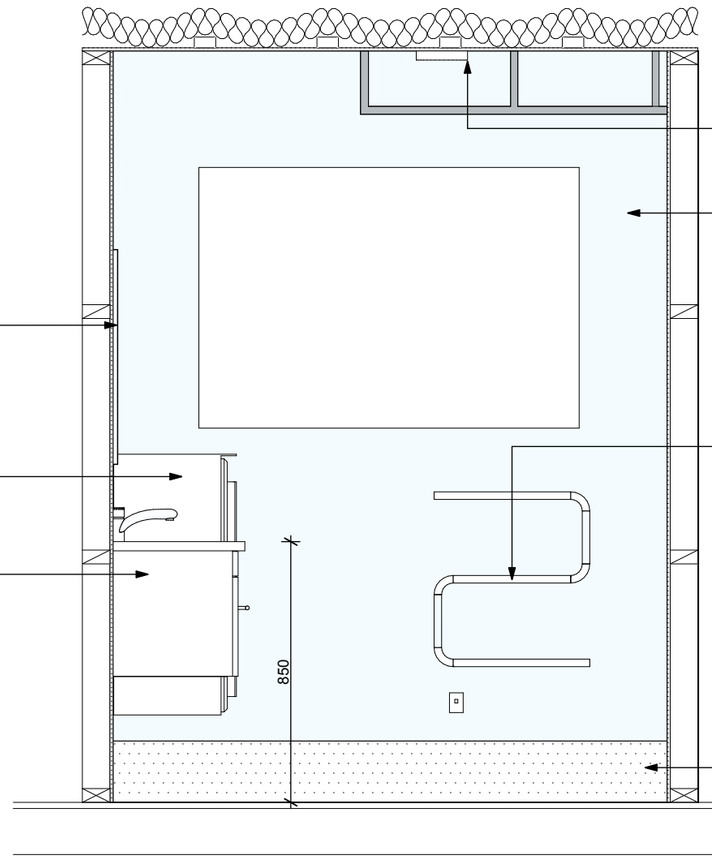

Ceiling Extractor Fan
Manrose / Simx in line fan 100mm MFP100F
69l/s, 250m3/hr, to be Vented through Soffit

Wet Area Linings
Tarkett wet wall linings "Protectwall" 1.5mm - Installed as per manufacturers instructions. onto New Aqua Gib.
New wet wall lining Colour to owners specification

Recessed Mirrored Cabinet
St Michael Dante Plus 600.
Code: 88101-W Set as low as possible for wheel chair use, ensuring adequate height for tap function and other users.

Heated Towel Rails plus RCD. power connection

Wall Tower
Ceraform Wall Hung Mini Tower (850H x 300W x 400mmD)
Allow to pack off wall 20mm min. to allow for cabinet handles. Set height to suit client.

Vanity / Basin
New Ceraform Galaxy 600mm wide wall hung vanity set at 850mm AFL. Complete with Lever type tap

Floor Covering/Lining
Install Slip resistant Tarkett Granite Safe-T flooring with 200mm coved up stand. Colour to be selected by Owner / Client. Note// details supplied does not supersede the manufacturers instructions. Installer is to be a Jacobsen's approved applicator

1 Int. Elevation 1 1:20

PRELIMINARY TENDER SET

DESIGN DRAUGHTING SOLUTIONS LTD
For all of your Draughting and Design Needs
info@designhomes.co.nz PH 09 435 3390 10 Eden Tce, Kamo, Whangarei

office job no. B448
866 Omamari Rd
Dargaville .

ACC funded accessible home modification on behalf of:
accessable completed by Design Draughting Solutions Ltd,

accessable ENVIRONMENTAL HEALTH MANAGEMENT SERVICES

issue	date	drawn	revision notes
1	19/10/17		TDS
2	07/11/17	Evan Russell	BC ISSUE

job no. B448
Bathroom Elevation 1
A3 Set.. Page No. 5

DRAWINGS + DOCUMENTATION REMAIN THE PROPERTY OF ACCESSABLE | DO NOT SCALE OFF DRAWINGS | CONTRACTOR MUST CHECK + VERIFY DISCREPENCIES, DIMENSIONS + LEVELS ON SITE PRIOR TO COMMENCING WORK | DRAWINGS ARE INDICATIVE ONLY OF WORK TO BE DONE + ARE TO BE READ IN CONJUNCTION WITH SPECIFICATION + PRODUCT LITERATURE | ALL WORK TO COMPLY WITH RELEVANT STANDARDS

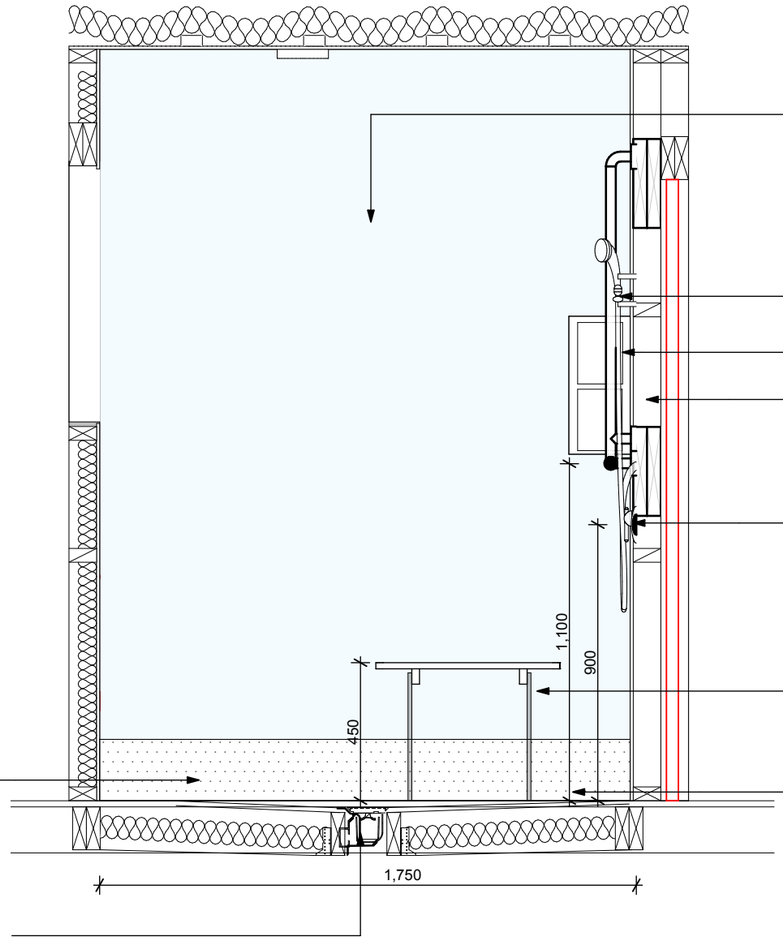

Wet Area Linings
Tarkett wet wall linings "Protectwall" 1.5mm - Installed as per manufacturers instructions. onto New Aqua Gib.
New wet wall lining Colour to owners specification

Shower Head + Slide
Superquip SS Slide Shower Safety Ø32mm T-Rail configuration, 900mm Long. Set 1100mm above FL,

Corner shower caddie with suction cups

90mm Packed out wall to allow plumbing and support for T Rail.

Shower Mixer,
Felton Reflex Fusion Shower Mixer Code RFSCMC. Set 900mm above floor level

Shower Seat
New 600mm wide Folding shower seat with fold down legs.
SuperQuip Code 077/304/600PL/LEGS
Ensure Solid nogging + set at 450mm AFL.
Install 2/290x45 x 2 Solid nogging for seat support.

Floor Covering/Lining
Install Slip resistant Tarkett Granite Safe-T flooring with 200mm coved up stand. Colour to be selected by Owner / Client. Note// details supplied does not supersede the manufacturers instructions. Installer is to be a Jacobsen's approved applicator

Wet Area Shower
1050x1750 Formed Wet Area Shower. Cut into existing floor joists + Formed fall to central drainage point set 1:50 min gradient. fall below Floor Level.

Floor Waste
Allproof Revolver Easyclean Waste, REVSCPT 50mm, with Square chrome / brass tile grate

1 Int. Elevation 2 1:20

PRELIMINARY TENDER SET

DESIGN DRAUGHTING SOLUTIONS LTD
For all of your Draughting and Design Needs
info@designhomes.co.nz PH 09 435 3390 10 Eden Tce, Kamo, Whangarei

office job no. B448
866 Omamari Rd
Dargaville .

ACC funded accessible home modification on behalf of:
accessable completed by Design Draughting Solutions Ltd,

issue	date	drawn	revision notes
1	19/10/17		TDS
2	07/11/17	Evan Russell	BC ISSUE

job no. B448
Bathroom Elevation 2
A3 Set.. Page No. 6

DRAWINGS + DOCUMENTATION REMAIN THE PROPERTY OF ACCESSABLE | DO NOT SCALE OFF DRAWINGS | CONTRACTOR MUST CHECK + VERIFY DISCREPENCIES, DIMENSIONS + LEVELS ON SITE PRIOR TO COMMENCING WORK | DRAWINGS ARE INDICATIVE ONLY OF WORK TO BE DONE + ARE TO BE READ IN CONJUNCTION WITH SPECIFICATION + PRODUCT LITERATURE | ALL WORK TO COMPLY WITH RELEVANT STANDARDS

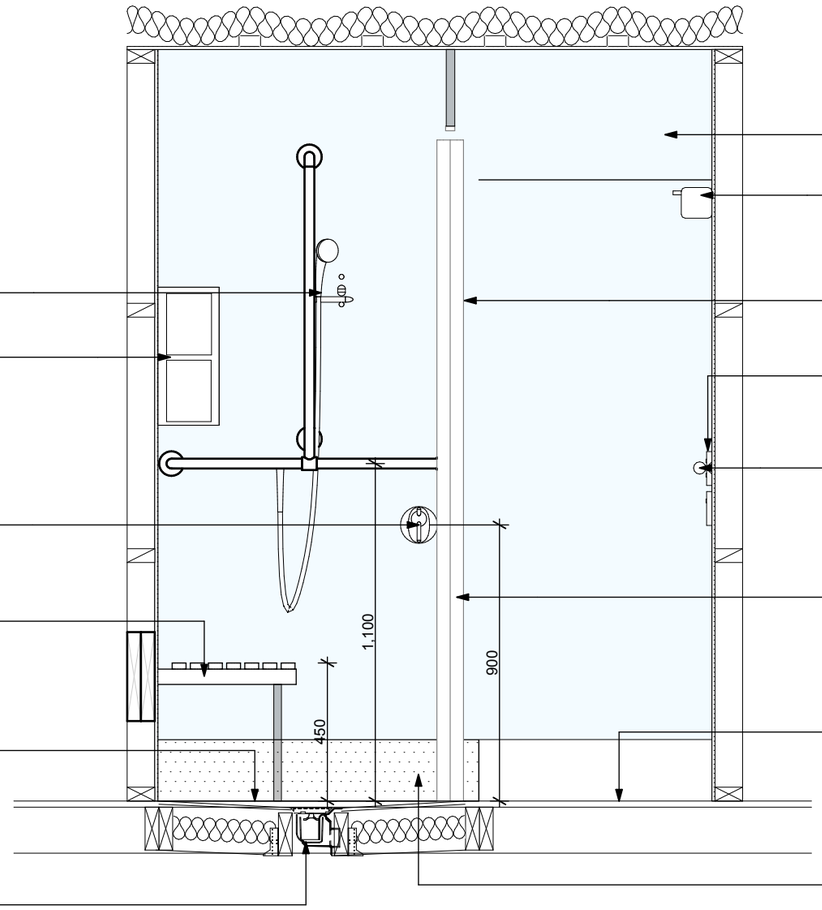

Shower Head + Slide
Superquip SS Slide Shower Safety Ø32mm T-Rail configuration, 900mm Long. Set 1100mm above FL,

Corner shower caddie with suction cups

Shower Mixer,
Felton Reflex Fusion Shower Mixer Code RFSCMC. Set 900mm above floor level

Shower Seat
New 600mm wide Folding shower seat with fold down legs.
SuperQuip Code 077/304/600PL/LEGS
Ensure Solid nogging + set at 450mm AFL.
Install 2/290x45 x 2 Solid nogging for seat support.

Wet Area Shower
1050x1750 Formed Wet Area Shower. Cut into existing floor joists + Formed fall to central drainage point set 1:50 gradient fall. below Floor Level.

Floor Waste
Allproof Revolver Easyclean Waste, REVSCPT 50mm, with Square chrome / brass tile grate

Wet Area Linings
Tarkett wet wall linings "Protectwall" 1.5mm - Installed as per manufacturers instructions. onto New Aqua Gib.
New wet wall lining Colour to owners specification

Fan Heater 2mtr high. plus a RCD protected power connection

2030 x 300 Safety 'A' Grade Glass barrier

New Light switch incorporating Lights, Heater and Extractor

Towel Rail
Superquip 600mm wide to be installed as a towel rail, set at 1.0m from floor level.
install onto solid nogging/studs
Code : 030/304HD600

Shower Curtain
Watertight Down-Under' 2m min length weighted drop curtain + over head track. Set track to allow 300mm gap above and bottom edge to touch floor level. Allow for custom made length if required depending on existing ceiling height. Colour to owners selection

Floor Channel
Jesani 40mm wide Door Threshold Strip drain Channel with grate insert installed as per manufacturers instructions

Floor Covering/Lining
Install Slip resistant Tarkett Granite Safe-T flooring with 200mm coved up stand. Colour to be selected by Owner / Client. Note// details supplied does not supersede the manufacturers instructions. Installer is to be a Jacobsen's approved applicator

1 Int. Elevation 3 1:20

PRELIMINARY TENDER SET

DESIGN DRAUGHTING SOLUTIONS LTD
For all of your Draughting and Design Needs
info@designhomes.co.nz PH 09 435 3390 10 Eden Tce, Kamo, Whangarei

office job no. B448
866 Omamari Rd
Dargaville .

ACC funded accessible home modification on behalf of:
accessable completed by Design Draughting Solutions Ltd,

accessable ENVIRONMENTAL HEALTH MANAGEMENT SERVICES

issue	date	drawn	revision notes
1	19/10/17		TDS
2	07/11/17	Evan Russell	BC ISSUE

job no. B448
Bathroom Elevation 3
A3 Set.. Page No. 7

DRAWINGS + DOCUMENTATION REMAIN THE PROPERTY OF ACCESSABLE | DO NOT SCALE OFF DRAWINGS | CONTRACTOR MUST CHECK + VERIFY DISCREPENCIES, DIMENSIONS + LEVELS ON SITE PRIOR TO COMMENCING WORK | DRAWINGS ARE INDICATIVE ONLY OF WORK TO BE DONE + ARE TO BE READ IN CONJUNCTION WITH SPECIFICATION + PRODUCT LITERATURE | ALL WORK TO COMPLY WITH RELEVANT STANDARDS

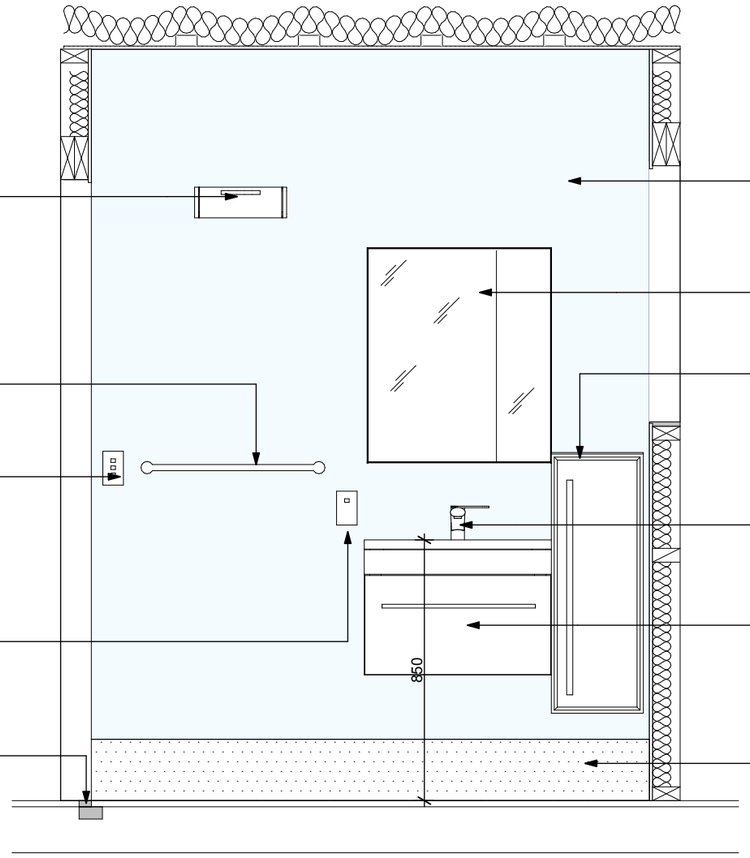

Fan Heater 2mtr high. plus a RCD protected power connection

Towel Rail
Superquip 600mm wide to be installed as a towel rail, set at 1.0m from floor level.
install onto solid nogging/studs
Code : 030/304HD600

New Light switch incorporating Lights, Heater and Extractor

RCD Power point

Floor Channel
Jesani 40mm wide Door Threshold Strip drain Channel with grate insert installed as per manufacturers instructions

Wet Area Linings
Tarkett wet wall linings "Protectwall" 1.5mm - Installed as per manufacturers instructions. onto New Aqua Gib.
New wet wall lining Colour to owners specification

Recessed Mirrored Cabinet
St Michael Dante Plus 600.
Code: 88101-W Set as low as possible for wheel chair use, ensuring adequate height for tap function and other users.

Wall Tower
Ceraform Wall Hung Mini Tower (850H x 300W x 400mmD)
Set height to suit client.

Vanity / Basin Mixer -
Single lever mixer Tap - 'Foreno Mana'
Code: 'MN02C'

Vanity / Basin
New Ceraform Galaxy 600mm wide wall hung vanity set at 850mm AFL. Complete with Lever type tap

Floor Covering/Lining
Install Slip resistant Tarkett Granite Safe-T flooring with 200mm coved up stand. Colour to be selected by Owner / Client. Note// details supplied does not supersede the manufacturers instructions. Installer is to be a Jacobsen's approved applicator

1 Int. Elevation 4 1:20

PRELIMINARY TENDER SET

DESIGN DRAUGHTING SOLUTIONS LTD
For all of your Draughting and Design Needs
info@designhomes.co.nz PH 09 435 3390 10 Eden Tce, Kamo, Whangarei

office job no. B448
866 Omamari Rd
Dargaville .

ACC funded accessible home modification on behalf of:
accessable completed by Design Draughting Solutions Ltd,

accessable ENVIRONMENTAL HEALTH MANAGEMENT SERVICES

issue	date	drawn	revision notes
1	19/10/17		TDS
2	07/11/17	Evan Russell	BC ISSUE

job no. B448
Bathroom Elevation 4
A3 Set.. Page No. 8

DRAWINGS + DOCUMENTATION REMAIN THE PROPERTY OF ACCESSABLE | DO NOT SCALE OFF DRAWINGS | CONTRACTOR MUST CHECK + VERIFY DISCREPENCIES, DIMENSIONS + LEVELS ON SITE PRIOR TO COMMENCING WORK | DRAWINGS ARE INDICATIVE ONLY OF WORK TO BE DONE + ARE TO BE READ IN CONJUNCTION WITH SPECIFICATION + PRODUCT LITERATURE | ALL WORK TO COMPLY WITH RELEVANT STANDARDS

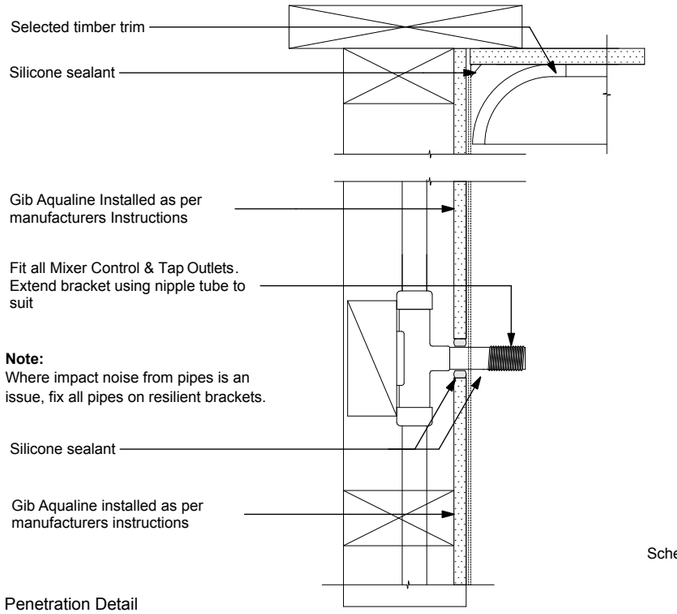

Penetration Detail

Refer to Gib Wet Area Systems Detail (GAW-D012) for guide only

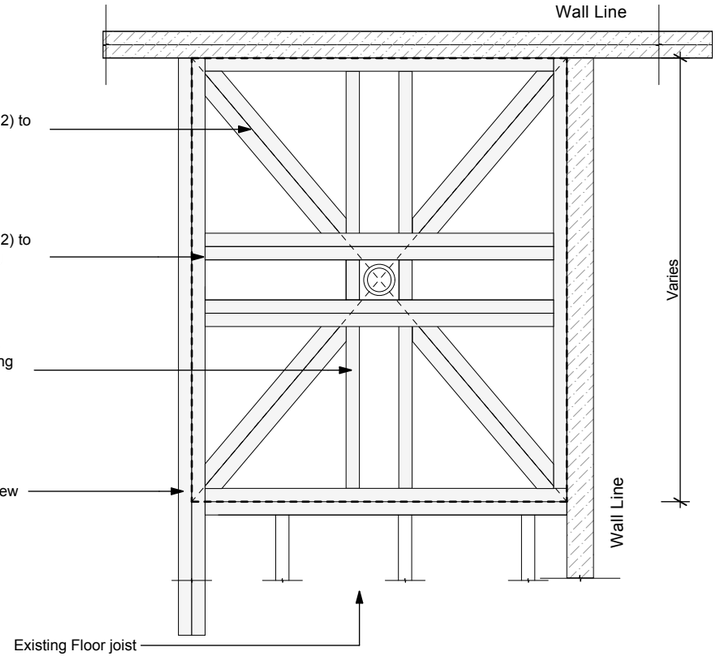

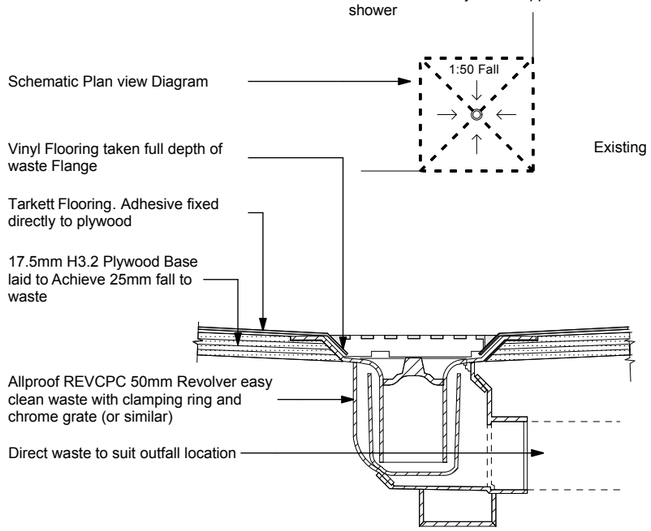

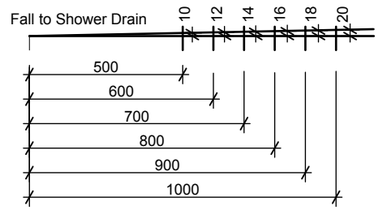

1:50 Drain Fall Schematic

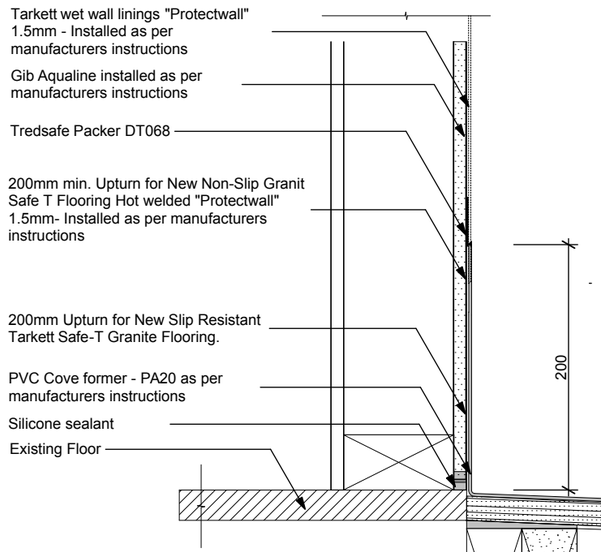

W.A.S Shower Floor to Wall Detail

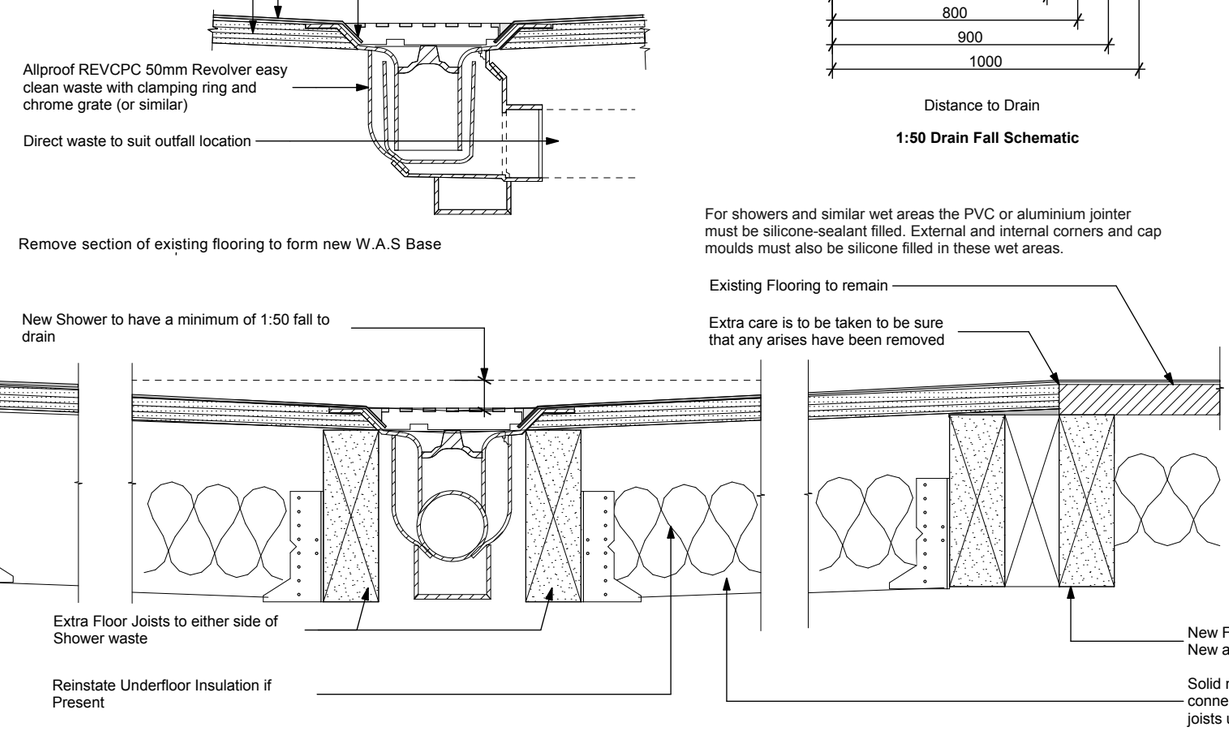

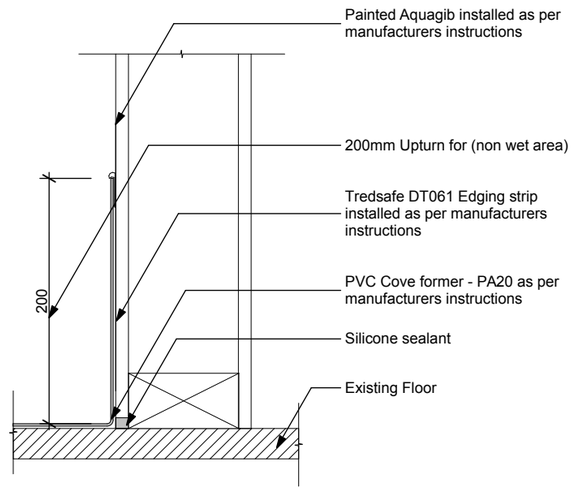

Bathroom (Non wet area) Floor to Wall Detail

TIMBER FLOOR NOTES

1. Allow to provide New Grade SG8, H3.2 Timber joists under wet area shower
2. Joists are to be set down 25mm and packed upon to suit fall
3. Joists Located adjacent to existing joists laminated as per Clause 2.4.4.7 NZS 3604
4. New Joists sizes to match existing joists
5. Joists are to be Grade SG8 min. and at 400mm crs. max.
6. Joists to be supported by and span to bearers at each end

1 Wet Area Details 1:5

PRELIMINARY TENDER SET

DESIGN DRAUGHTING SOLUTIONS LTD
For all of your Draughting and Design Needs
info@designhomes.co.nz PH 09 435 3390 10 Eden Tce, Kamo, Whangarei

office job no. B448

866 Omamari Rd
Dargaville .

ACC funded accessible home modification on behalf of:
accessable completed by Design Draughting Solutions Ltd,

issue	date	drawn	revision notes
1	19/10/17		TDS
2	07/11/17	Evan Russell	BC ISSUE

job no. B448

Wet Area Details

A3 Set.. Page No. 9

DRAWINGS + DOCUMENTATION REMAIN THE PROPERTY OF ACCESSABLE | DO NOT SCALE OFF DRAWINGS | CONTRACTOR MUST CHECK + VERIFY DISCREPENCIES, DIMENSIONS + LEVELS ON SITE PRIOR TO COMMENCING WORK | DRAWINGS ARE INDICATIVE ONLY OF WORK TO BE DONE + ARE TO BE READ IN CONJUNCTION WITH SPECIFICATION + PRODUCT LITERATURE | ALL WORK TO COMPLY WITH RELEVANT STANDARDS

Memorandum from licensed building practitioner: Certificate of design work

Section 45 and section 30C, Building Act 2004

Please fill in the form as fully and correctly as possible.

If there is insufficient room on the form for requested details, please continue on another sheet and attach the additional sheet(s) to this form.

THE BUILDING	
Street address:	
Suburb:	
Town/City:	Postcode:

THE OWNER(S)		
Name(s):		
Mailing address:		
Suburb:	PO Box/Private Bag:	
Town/City:		Postcode:
Phone number:	Email address:	

BASIS FOR PROVIDING THIS MEMORANDUM

I am providing this memorandum in my role as the: Please tick the option that applies ✓

◯	**sole** designer of all of the RBW design outlined in this memorandum – I carried out all of the RBW design work myself – no other person will be providing any additional memoranda for the project
◯	**lead** designer who carried out some of the RBW design myself but also supervised other designers – this memorandum covers their RBW design work as well as mine, and **no other** person will be providing any additional memoranda for the project
◯	**lead** designer for all but specific elements of RBW – this memorandum only covers the RBW design work that I carried out or supervised and the **other** designers will provide their own memorandum relating to their specific RBW design
◯	**specialist** designer who carried out specific elements of RBW design work as outlined in this memorandum – other designers will be providing a memorandum covering the remaining RBW design work

IDENTIFICATION OF DESIGN WORK THAT IS RESTRICTED BUILDING WORK (RBW)

I _____ carried out / supervised the following design work that is restricted building work

PRIMARY STRUCTURE: B1

Design work that is RBW	Description of RBW	Carried out or supervised	Reference to plans and specifications
Tick ✓ if included. Cross ✗ if excluded	If appropriate, provide details of the RBW	Tick ✓ whether you carried out this design work or supervised someone else carrying out this design work	If appropriate, specify references
All RBW design work relating to B1 ◯		◯ Carried out ◯ Supervised	
Foundations and subfloor framing ◯		◯ Carried out ◯ Supervised	

Design work that is RBW	Description of RBW	Carried out or supervised	Reference to plans and specifications
Tick ✓ if included. Cross ✗ if excluded	If appropriate, provide details of the RBW	Tick ✓ whether you carried out this design work or supervised someone else carrying out this design work	If appropriate, specify references
Walls ◯		◯ Carried out ◯ Supervised	
Roof ◯		◯ Carried out ◯ Supervised	
Columns and beams ◯		◯ Carried out ◯ Supervised	
Bracing ◯		◯ Carried out ◯ Supervised	
Other ◯		◯ Carried out ◯ Supervised	

Design work that is RBW	Description of RBW	Carried out or supervised	Reference to plans and specifications
Tick ✓ if included. Cross ✗ if excluded	If appropriate, provide details of the RBW	Tick ✓ whether you carried out this design work or supervised someone else carrying out this design work	If appropriate, specify references
EXTERNAL MOISTURE MANAGEMENT SYSTEMS: E2			
All RBW design work relating to E2 ◯		◯ Carried out ◯ Supervised	
Damp proofing ◯		◯ Carried out ◯ Supervised	
Roof cladding or roof cladding system ◯		◯ Carried out ◯ Supervised	
Ventilation system (for example, subfloor or cavity) ◯		◯ Carried out ◯ Supervised	
Wall cladding or wall cladding system ◯		◯ Carried out ◯ Supervised	
Waterproofing ◯		◯ Carried out ◯ Supervised	
Other ◯		◯ Carried out ◯ Supervised	

Design work that is RBW	Description of RBW	Carried out or supervised	Reference to plans and specifications
Tick ✓ if included. Cross ✗ if excluded	If appropriate, provide details of the RBW	Tick ✓ whether you carried out this design work or supervised someone else carrying out this design work	If appropriate, specify references
FIRE SAFETY SYSTEMS: C1 - C6			
Emergency warning systems Evacuation and fire service operation systems ◯ Suppression or control systems Other		◯ Carried out ◯ Supervised	
Note: The design of fire safety systems is only restricted building work when it involves small-to-medium apartment buildings as defined by the Building (Definition of Restricted Building Work) Order 2011.			

WAIVERS AND MODIFICATIONS

Waivers or modifications of the Building Code are required. ◯ Yes ◯ No

If Yes, provide details of the waivers or modifications below:

Clause	Waiver/modification required
List relevant clause numbers of building code	Specify nature of waiver or modification of building code required

ISSUED BY

Name and contact details of the licensed building practitioner who is licensed to carry out or supervise design work that is restricted building work.	
Name:	LBP or Registration number:
The practitioner is a: ◯ Design LBP ◯ Registered architect ◯ Chartered professional engineer	
Design Entity or Company (optional):	
Mailing address (if different from below):	
Street address/Registered office:	
Suburb:	Town/City:
PO Box/Private Bag:	Postcode:
Phone number:	Mobile:
After hours:	Fax:
Email address:	Website:

DECLARATION

I _____ LBP, state that I have applied the skill and care reasonably required of a competent design professional in carrying out or supervising the Restricted Building Work (RBW) described in this form, and that based on this, I also state that the RBW:

- Complies with the building code, or
- Complies with the building code subject to any waiver or modification of the building code recorded on this form

Signature: _____

Date: _____

INSTALLATION INSTRUCTIONS

IMPORTANT: PLEASE READ **PRIOR** TO INSTALLATION

1. We recommend that a **qualified, licensed tradesperson** install this vanity and we would expect the installation to be undertaken in a tradesman like manner and finished to a tradesman standard.
2. This product carries a full warranty against faulty workmanship and materials. Please inspect thoroughly before installation to ensure that the unit has not been damaged in transit.
3. Ensure that the water temperature does not exceed 55˚C for safety and to avoid possible damage to your vanity basin.

4 CABINET

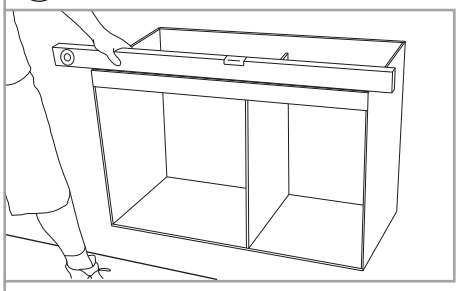

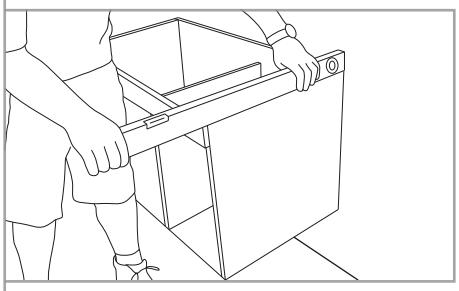

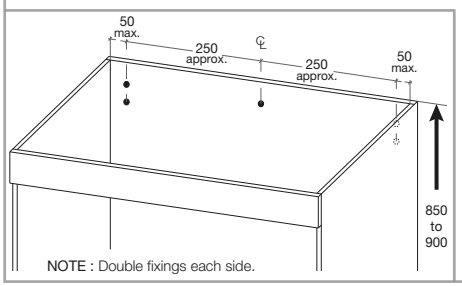

NOTE : Double fixings each side.

WALL HUNG & FLOOR STANDING FURNITURE

Remove the doors and/or drawers to provide access to the inside rear wall of the cabinet (note that all hinges are quick release for easy removal).

For wall hung vanities - mark the position of the top of the vanity. The work surface would typically be set at a height of 850mm to 900mm. If the top (basin) is packed separately deduct the thickness of the top from the finished height to determine the correct height for the top of the cabinet. Drill holes for plumbing in the back panel or base of the cabinet with an appropriate sized hole saw.

WARNING : Do not secure the unit to the wall until the vanity is sitting level, plumb and square. Use suitable packing to achieve this if the wall cannot be aligned.

Position unit and check that it is sitting level, plumb and square.

Screw Fixing : For wall hung vanities.
Fixings must be into solid timber and must be no more than 50mm from each side of the cabinet.
The installer must provide additional fixing points evenly spread at approximately 250mm centres along the top of the back panel.

Floor standing vanities should, likewise, be checked for sitting level, plumb and square and suitably packed to achieve this.
Screw fix to the wall to secure either through the back rail or back panel.

5 TOPS

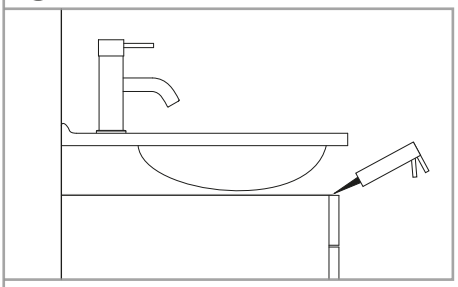

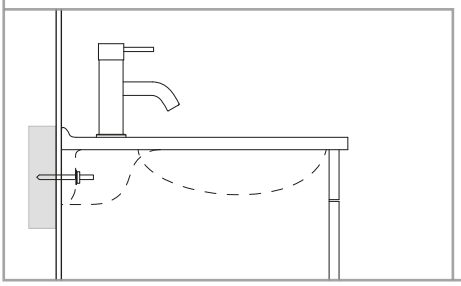

FITTING TOPS TO FURNITURE

Acrylic & Mineral Cast Tops
If the top is not attached to the cabinet, fit the taps and waste then glue it to the top of the cabinet with a continuous bead of Expandite SB adhesive, Panel Bond or something similar.

Ceramic & Ceramic Quartz Tops
During the complex manufacturing process ceramic tops shrink considerably and can be slightly uneven. **It is recommended that the top be fixed to the cabinet with a continuous bead of silicone so the top will not rock or move.** Apply the silicone to the top edges of the cabinet then postion the top. If the cabinet is wall hung then the ceramic top should **also be fixed to the solid timber in the wall** with the fasteners packed with the top.

NOTE : Not all ceramic tops are designed to be wall fixed.

st.michel BATHROOMWARE
St Michel Industries Limited, PO Box 21 122, Henderson, Auckland. Phone 09 837 4276. Fax 09 837 4325

INSTALLATION INSTRUCTIONS

IMPORTANT: PLEASE READ **PRIOR** TO INSTALLATION

6 WASTE

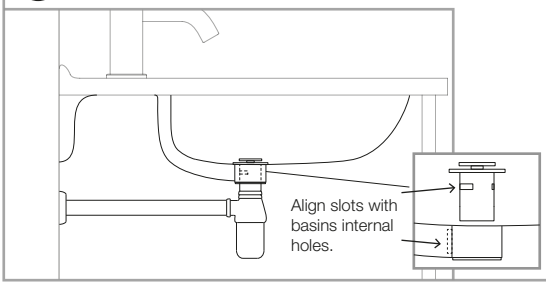

FITTING WASTE CORRECTLY

In a ceramic basin, **hand tighten** the waste - do not overtighten or the basin may be damaged. Use suitable overflow waste and align the slots with the internal holes in the basin and ensure that no excess silicone or putty is obstructing the water flow.

7 SEALING

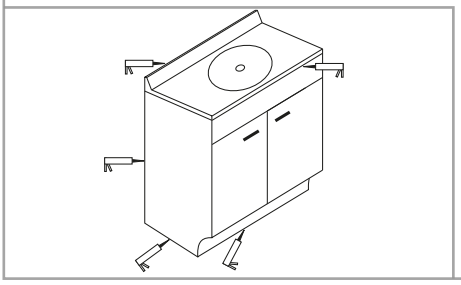

Materials used for the construction of this unit are water resistant and not waterproof. A bead of sealant (specifically formulated for bathrooms) **must be used to seal all edges** where water penetration can occur. i.e. Between the cabinet and the wall and the floor, between the vanity top and the top edge of the cabinet and between a vessel basin and the top surface.Take care to dry any spillage or leakage of water onto or into the cabinet during installation.

8 HINGE ADJUSTMENT

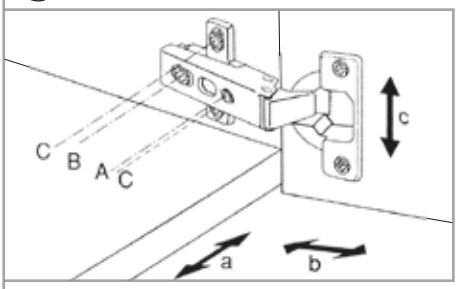

It is the responsibility of the installer to make any adjustments to align doors after installation if required.

St Michel use clip hinges which require only light finger pressure to clip into place and allow the doors to be easily removed for access to plumbing fittings.

DOOR ALIGNMENT
Your doors have been adjusted in the factory on a level surface to achieve matching height, equal gap and surface alignment. Before you adjust the doors, ensure again that the vanity is level and true and not twisted. When level, if the doors still do not align, adjustment can be made to the hinges as follows:

A. SIDE ADJUSTMENT
To move the doors sideays in total or to level each door, turn screw **A** clockwise or anti-clockwise.

B. DEPTH ADJUSTMENT
To move the door inward or outward from the carcass - loosen the hinge arm fastening screw **B** and slide in the direction you want to go. Retighten hinge arm fastening screw **B**.

C. HEIGHT ADJUSTMENT
Loosen the top and bottom screw **C** on each mount plate, adjust and retighten.

IMPORTANT WARRANTY NOTICE

- Please note that in the event that the vanity is not installed in accordance with these instructions the St Michel warranty may be voided. Any modifications to the product **will** void any warranty.
- Please ensure that the Warranty and Conditions of Use card is left in the cabinet for the homeowner.

st.michel BATHROOMWARE
St Michel Industries Limited, PO Box 21 122, Henderson, Auckland. Phone 09 837 4276. Fax 09 837 4325

SPECIFICATION

ACC Modifications

at

218 Young Road
RD 4, Arapohue
Dargaville

for

Accessable

Job Number: B 320

Date: 13 July 2017

1012 TABLE OF CONTENTS

1012 TABLE OF CONTENTS 2
1220 PROJECT 3
1237 WARRANTIES 4
1270 CONSTRUCTION 6
5113G GIB® PLASTERBOARD LININGS 9
5134H JAMES HARDIE PREFINISHED FIBRE CEMENT LININGS 13
5433E ECOPLY® FLOORS 16
6412J JACOBSEN TARKETT LINOLEUM 18
7151 SANITARY FIXTURES, TAPWARE & ACCESSORIES 22
7701 ELECTRICAL BASIC 25
8420 MISCELLANEOUS SITE WORKS 30

OTHER DOCUMENTATION SUPPLIED:

1. MANUFACTURERS APPRAISALS AND INSTALLATION DOCUMENTATION:
   - JACOBENS TARKETT WET ROOM INSTALLATION GUIDE
   - JAMES HARDIE PRE-FINISHED FIBRE CEMENT LININGS (HARDIGLAZE)
   - GIB AQUALINE INSTALLATION BOOKLET
   - ST MICHEL - WALL HUNG VANITY INSTALLATION

1220 PROJECT

1. GENERAL

This general section describes the project including:
- A description of the work
- Site description, features and restrictions
- Design parameters for design by contractor
- Archaeological discovery

1.1 READ ALL SECTIONS TOGETHER
Read all general sections together with all other sections.

Description of the work

1.2 SCOPE OF THE WORK
- Modification to existing Bathroom
- Widening Concrete pathway and adding pad in front of garage

1.3 RESTRICTED BUILDING WORK
This project does not include Restricted Building Work.

Site

1.4 LEGAL DESCRIPTION
The site of the works, the street address and the legal description are shown on the drawings.

1237 WARRANTIES

1. GENERAL

This general section refers to the requirements for warranties/guarantees as listed in this section, as referred to within the body of this specification, and as referred to within separate specifications/documents relating to this project. It includes:
- Warranties for parts of the work required by the principal in a required form
- Installer/applicator warranties for parts of the work in the installer's/applicator's standard form
- Manufacturer/supplier warranties provided with products, appliances and the like in the manufacturer's/supplier's standard form
- Guarantees provided by contractor in the contractor's standard form

These guarantees/warranties are in addition to any warranties, implied warranties, or guarantees that are required by the Building Act, the Building Regulations, or the building consent.

Warranties

1.1 PROVIDE WARRANTIES
Provide executed warranties in favour of the principal in respect of, but not limited to, materials, components, service, application, installation and finishing called for in that specified section of work. The terms and conditions of the warranty in no case negate the minimum remedies available under common law as if no warranty had been offered. Failure to provide the warranty does not reduce liability under the terms of the warranty called for in that specified section of work.

- Commence warranties from the date of practical completion of the contract works (unless otherwise stated).
- Maintain their effectiveness for the times stated.
- Provide executed warranties prior to practical completion.

1.2 WARRANTIES - INSTALLER/APPLICATOR
Where installer/applicator warranties are offered covering execution and materials of proprietary products or complete installations, provide such warranties to the contract administrator. These warranties may be provided in lieu of the warranties that are otherwise required provided that these warranties are subject to similar conditions and periods.

Provide warranties in favour of the principal. The terms and conditions of such warranties in no case negate the minimum remedies available under common law as if no warranty had been offered. Failure to provide the warranty does not reduce liability for execution and materials for that part of the work.

1.3 WARRANTIES - MANUFACTURER/SUPPLIER
Where warranties are offered covering materials, equipment, appliances or proprietary products, provide all such warranties to the contract administrator.

Provide warranties in favour of the principal. The terms and conditions of such warranties in no case negate the minimum remedies available under common law as if no warranty had been offered. Failure to provide the warranty does not reduce liability for execution and materials for that part of the work.

Submission

1.4 REVIEW BY CONTRACTOR
Obtain the warranties from the installers, applicators, manufacturers and suppliers at the earliest possible date and review to ensure that they are correctly filled out and executed. Where warranties are executed as a deed, ensure that a duplicate copy is provided for execution by the owner/principal. Keep safe and secure until required for submission.

1.5 WARRANTIES - REQUIRED BY BUILDING CONSENT AUTHORITY
Obtain copies of warranties required as a condition of the building consent in the form required for submission to the BCA. Keep safe and secure until required at the time of the BCA final inspection and Code Compliance Certificate.

1.6 WARRANTIES - REQUIRED BY CONTRACT
Obtain copies of warranties listed in the contract documents. Provide all warranties at the same time. If the project has an operations and maintenance documentation provision, present the warranties with the operations and maintenance information. If no operations and maintenance documentation provision exists, present the warranties to the contract administrator in a loose-leaf binder with a contents index suitably labelled and including the project name and details. Provide a title on the binder edge "Warranties for (project name)"

1.7 WARRANTIES - SUBMISSION NZIA SCC CONTRACT
Refer to the contract conditions for any requirement relating to the time for submission for warranties and guarantees. Submit all warranties to the architect no later than the date of the contractor's advice of achieving practical completion.

1.8 WARRANTIES - SUBMISSION NZS3910:2013 CONTRACT
Refer to NZS 3910 Conditions of Contract for building and civil engineering construction, clauses 11.5 and 11.6 for requirements relating to the time for submission of warranties and guarantees. Submit all warranties/guarantees to the engineer no later than the date that the contractor notifies that it believes the contract works qualify for practical completion.

1.9 WARRANTIES - SUBMISSION NZS3915:2005 CONTRACT
Refer to NZS 3915 Conditions of contract for building and civil engineering construction (where no person is appointed to act as engineer to the contract), clause 11.5 for requirements relating to the time for submission for warranties and guarantees. Submit all warranties/guarantees to the principal before or at the time of the issue of the provisional defects liability certificate the end of the defects liability period.

1.10 WARRANTIES - SUBMISSION NZS3916:2013 CONTRACT
Refer to NZS 3916 Conditions of contract for building and civil engineering – Design and construct, clauses 11.5 and 11.6 for requirements relating to the time for submission of warranties and guarantees. Submit all warranties/guarantees to the engineer no later than the date that the contractor notifies that it believes the contract works qualify for practical completion.

Weathertightness and watertightness warranty

1.11 WEATHERTIGHTNESS AND WATERTIGHTNESS WARRANTY
A warranty is required from the contractor for a minimum period of 2 years, covering the weathertightness of the complete building envelope and the watertightness of all liquid supply and disposal systems and fittings. This general warranty is in addition to any specific warranties required.

Provide this warranty in favour of the principal. The terms and conditions of this warranty in no case negate the minimum remedies available under common law as if no warranty had been offered. Failure to provide the warranty does not reduce liability for execution and materials for that part of the work.

- Commence the warranty from the date of Practical Completion.
- Maintain its effectiveness for the time stated.

1270 CONSTRUCTION

1. GENERAL

This GENERAL section relates to common requirements for construction issues including: -
- Quality assurance
- Noise and nuisance
- Set out
- Common execution requirements
- Common materials requirements

Quality control and assurance

1.1 QUALITY ASSURANCE
Carry out and record regular checks of material quality and accuracy, including:
- Levels of all floors relative to the site datum.
- Framing timber moisture content.

Where any material, quality or dimension falls outside specified or required tolerances, obtain written direction from the contract administrator. Where building consent approval is affected, confirm remedial action with the Building Consent Authority.

Provide all materials, plant, attendances, supervision, inspections and programming to ensure the required quality standards are met by all project personnel.

Noise and nuisance

1.2 LIMIT CONSTRUCTION NOISE
Minimise the effects of noise generation by including in the planning of the work such factors as placing of plant, programming the sequence of operations and other management functions. Limit construction noise to comply with the requirements of NZS 6803, the requirements of the Resource Management Act sections 326, 327 and 328 and the Health and Safety in Employment Regulations clause 11.

1.3 INCONVENIENCE TO OTHERS
When the works are to be carried out in or around occupied premises, ascertain the nature and times of occupation and use. Carry out the works in a manner to minimise inconvenience, nuisance and danger to occupants and users.

1.4 DIRT AND DROPPINGS
Remove dirt and droppings deposited on public or private thoroughfares from vehicles servicing the site to the satisfaction of the appropriate authorities and the contract administrator.

1.5 DAMAGE AND NUISANCE
Take all precautions to prevent damage and nuisance from water, fire, smoke, dust, rubbish and all other causes resulting from the construction works.

Set-out and tolerances

1.6 USE OF SET-OUT INSTRUMENTS
Permit without charge, the use of instruments already on site for checking, setting out and levels.

1.7 CHECK DIMENSIONS
Check all dimensions both on drawings and site, particularly the correlation between components and work in place. Take all dimensions on drawings to be between structural elements before linings or finishes, unless clearly stated otherwise.

1.8 TOLERANCES
All work to be level, plumb, and true to line and face. Unless otherwise specified in specific work sections of this specification, tolerances for structural work shall comply with the following:

Timber framing:	To NZS 3604 Timber-framed buildings Clause 2.2 Tolerances Table 2.1 Timber framing tolerances

Execution

1.9 EXAMINE PREVIOUS WORK
Before commencing any part of the work carefully examine the previous work on which it may depend. Report in writing to the contract administrator defects that may affect the quality of the proposed work and obtain instructions. Commencing work on any part means that previous work is accepted as being satisfactory for work of the required standard.

1.10 WORKER QUALIFICATIONS
All work to be level, plumb, and true to line and face. Employ only experienced workers familiar with the materials and techniques specified.

1.11 MINIMISE DELAYS DUE TO WEATHER
Use appropriate techniques and methods to prevent damage and minimise delays due to weather.

Materials

1.12 NEW PRODUCTS AND MATERIALS
Materials and products to be new unless stated otherwise, of the specified standard, and complying with all cited documents.

1.13 COMPATIBILITY OF MATERIALS AND FINISHES
Ensure all parts of a construction or finish are compatible and their individual use approved by the manufacturers and suppliers of other parts of the system. Source all parts of a system from a single manufacturer or supplier.

1.14 STORING PRODUCTS AND MATERIALS
Take delivery of and store products, materials and components in accordance with codes of practice and the product manufacturer's or supplier's stated requirements. Maintain the proper condition of any protective packaging, wrappings or supports during delivery, unloading and storage.

1.15 HANDLING PRODUCTS AND MATERIALS
Handle products, materials and components in accordance with codes of practice and the manufacturer's or supplier's stated guidelines. Avoid distortion and any contact with potentially damaging surfaces or conditions.

1.16 SUBSTRATE CONDITIONS
Ensure substrate conditions are within the manufacturer's or supplier's stated guidelines both before and during the installation of any material, product or system. Obtain written instructions on the necessary action to rectify unsatisfactory conditions.

1.17 INSTALLING PRODUCTS AND MATERIALS
Install in accordance with the manufacturer's or supplier's technical literature. Ensure that all installers are familiar with the required substrate conditions and the manufacturer's or supplier's specified preparation, fixing and finishing techniques.

1.18 COMPLY WITH STANDARDS
Comply with the relevant and/or cited Standard for any material or component. Obtain certificates of compliance when requested by the contract administrator.

1.19 CONDITION OF MATERIALS AND COMPONENTS
To be in perfect condition when incorporated into the work.

1.20 INCOMPATIBLE MATERIALS AND METALS
Separate incompatible materials and metals with separation layers, sleeves or gaskets of plastic film, bituminous felt or mastic or paint coatings, installed so that none are visible on exposed surfaces.

Final presentation and cleaning

1.21 REMOVE TEMPORARY PROTECTION
Remove all temporary markings, coverings, labels and protective wrappings unless instructed otherwise.

1.22 REPLACE DAMAGED MATERIALS
Replace all materials or component damaged during the works to the standard of and integral with the original.

1.23 COMPLETE ALL SERVICES
Ensure all services are complete and operational, with all temporary labelling removed, required labelling fixed and service instructions provided.

Commissioning

1.24 MOVING PARTS
Adjust, ease and lubricate all doors, windows, drawers, hardware, appliances, controls and all moving parts to give easy and efficient operation.

5113G GIB® PLASTERBOARD LININGS

1. GENERAL

This section relates to the supply, fixing and jointing of GIB® plasterboard linings and accessories to timber and steel framed walls and ceilings to form:
- standard systems
- wet area systems

Documents

1.1 DOCUMENTS
The following documents are specifically referred to in this section:

NZBC E2/AS1	External moisture
AS 1397	Continuous hot-dip metallic coated steel sheet and strip - Coatings of zinc and zinc alloyed with aluminium and magnesium
AS/NZS 2588	Gypsum plasterboard
AS/NZS 2589	Gypsum linings - Application and finishing
NZS 3604	Timber-framed buildings
BRANZ Technical Paper P21	BRANZ Technical Paper P21: A wall bracing test and evaluation procedure (2010)

1.2 MANUFACTURER/SUPPLIER DOCUMENTS
Manufacturer's and supplier's documents relating to this part of the work:
- GIB® Site Guide (Dec 2014)
- GIB Aqualine® Wet Area Systems (March 2007)

BRANZ Appraisal 427 (2007) - GIB Aqualine® Wet Area Systems

GreenTag Certification WWLCG001-001-A-2015 - GreenTag™ GreenRate/Level C for:
- GIB® Standard (10mm & 13mm)
- GIB Braceline® (10mm & 13mm)

Copies of the above literature are available at

Company:	Winstone Wallboards
Web:	www.gib.co.nz
Telephone:	0800 100 442

Requirements

1.3 NO SUBSTITUTIONS
Substitutions are not permitted to any specified GIB® systems, GIB® system components, GIB® plasterboard, associated GIB® products or GIB® accessories.

1.4 INSTALLER WORK SKILLS AND QUALIFICATIONS
GIB® plasterboard fixers and plasterers to be experienced competent workers, familiar with GIB® plasterboard lining systems installation and finishing techniques. Submit evidence of experience on request. For example:
- National Certificate of Interior Systems; or
- Certified Business member of AWCINZ.

Performance

1.5 INSPECTIONS AND ACCEPTANCE
Allow for inspection of the finished plasterboard surface:
- before applying sealer and
- before applying finish coatings or decorative papers,

so that after assessment of the type and/or angle of illumination and its effect on the completed decorative treatment, group approval and acceptance of the surface can be given.

2. PRODUCTS

Materials

2.1 GIB® PLASTERBOARD
Gypsum plaster core encased in a face and backing paper formed for standard and water resistance use to AS/NZS 2588.
GIB® Standard plasterboard
GIB Aqualine® wet area plasterboard

Components

2.2 SCREWS
GIB® Grabber® drywall type screws as follows:

Grabber® type	Used for fixing:
High Thread	GIB Ezybrace® or Standard systems to timber
Self Tapping	Standard systems to light gauge steel or timber
Dual Thread Screws	GIBFix®, GIB Ezybrace®, or Standard systems, to light gauge steel or timber
Wafer Head Needle Tip	Light gauge metal to timber not directly under plasterboard
Pancake Head Drill Tip	Light gauge metal to light gauge metal directly under plasterboard

Refer to GIB® requirements for appropriate details.

2.3 TAPE ON TRIMS AND EDGES
GIB® Goldline™ tape-on trims
GIB® UltraFlex® high impact corner mould
GIB® Levelline® Tape on Trim

2.4 METAL ANGLE TRIMS
GIB® galvanized steel slim angle trims.

Accessories

2.5 ADHESIVE
Timber frame and/or steel frame:
GIBFix® One ultra low VOC water based wallboard adhesive
GIBFix® All-Bond solvent based wallboard adhesive

2.6 JOINTING COMPOUND

Bedding compound:	GIB Tradeset®, GIB Lite Blue®, GIB MaxSet®, GIB ProMix® All Purpose, GIB Plus 4®
Finishing compound:	GIB ProMix® All Purpose, GIB® Trade Finish®, GIB® Trade Finish® Lite, GIB ProMix® Lite, GIB® U-Mix, GIB Plus 4®, GIB Trade Finish® Multi
Cove:	GIB-Cove® Bond

2.7 JOINTING TAPE
GIB® paper jointing tape.

2.8 GAP FILLER
GIB® Gap Filler ultra low VOC multi-purpose acrylic flexible filler

3. EXECUTION

Conditions

3.1 STORAGE
Store GIB® plasterboard sheets and accessories in dry conditions stored indoors out of direct sunlight in neat flat stacks on either an impervious plastic sheet or clear of the floor

with no sagging and avoiding damage to ends, edges and surfaces. Reject damaged material. Refer to GIB® Site Guide (Dec 2014).

3.2 LEVELS OF PLASTERBOARD FINISH
Provide the selected plasterboard surfaces to the pre decorative levels of finish specified in AS/NZS 2589.

3.3 CONFIRM LEVELS OF PLASTERBOARD FINISH ACCEPTANCE
Before commencing work, agree in writing upon the surface finish assessment procedure towards ensuring that the quality of finish expectations are reasonable and are subsequently obtained and acceptable.

Do not apply decorative treatment until it is agreed in writing by the contractor, subcontractors and decorator that the specified plasterboard Level of Finish has been achieved.

"Levels of plasterboard finish" is a tool for specifying the required quality of finish when installing and flush stopping GIB® plasterboard **prior** to the application of a range of decorative finishes under various lighting conditions. Refer to **AS/NZS** 2589.

3.4 SUBSTRATE
Do not commence work until the substrate is plumb, level and to the standard required by the sheet manufacturer's requirements. Refer to GIB® Site Guide (Dec 2014).

3.5 TIMBER FRAME MOISTURE CONTENT
Maximum allowable moisture content to AS/NZS 2589 for timber framing at lining: 18% or less for plasterboard linings. Refer to NZBC E2/AS1 and GIB® Site Guide (Dec 2014).

3.6 PROTECTION
Protect surfaces; cabinetwork, fittings, equipment and finishes already in place from the possibility of water staining and stopping damage. Refer to GIB® Site Guide (Dec 2014).

Application

3.7 LINING WALLS AND CEILINGS GENERALLY
Form to GIB® Site Guide (Dec 2014). Ensure bulk insulation thickness shall not exceed that of the wall framing.

3.8 BOARD ORIENTATION
Minimise joints by careful sheet layout using the largest sheet sizes possible, and generally fixing horizontally. Where part sheets are required for various stud heights they should be positioned so the cut sheet is as low as possible to keep joints below eye level.

3.9 FORM WET AREA SYSTEMS
Form to GIB Aqualine® Wet Area Systems requirements.

3.10 INSTALL TAPE-ON TRIMS
Install to GIB® Goldline™ Tape-on trims literature and/or GIB® Ultraflex high impact corner mould literature.

Finishing

3.11 FINISHING GENERALLY
To GIB® Site Guide (Dec 2014) and AS/NZS 2589.

Completion

3.12 REPLACE
Replace damaged sheets or elements.

3.13 CLEAN DOWN
Clean down completed surfaces to remove irregularities and finally sand down with fine paper to the sheet manufacturer's requirements, to leave completely smooth and clean.

3.14 REMOVE
Remove debris, unused materials and elements from the site.

3.15 LEAVE
Leave work to the standard required by following procedures.

5134H JAMES HARDIE PREFINISHED FIBRE CEMENT LININGS

1. GENERAL

This section relates to the supply and installation of James Hardie prefinished fibre cement sheet, including HardieGlaze™ Lining for:
- internal wall linings

Documents

1.1 DOCUMENTS
The following documents are specifically referred to in this section:

AS/NZS 2908.2	Cellulose-cement products - Flat sheet
NZS 3602	Timber and wood-based products for use in buildings

1.2 MANUFACTURER/SUPPLIER DOCUMENTS
James Hardie documents relating to this part of the work:
HardieGlaze™ Lining installation manual

Manufacturer/supplier contact details

Company:	James Hardie New Zealand
Web:	www.jameshardie.co.nz
Email:	info@jameshardie.co.nz
Telephone:	Ask James Hardie™ on 0800 808 868

Warranties

1.3 WARRANTY - MANUFACTURER/SUPPLIER
Provide a material manufacturer/supplier warranty:

15 years:	For **HardieGlaze™ Lining** sheet (refer to James Hardie™ product warranty)
15 years:	For accessories supplied by James Hardie™ (refer to James Hardie™ product warranty)
From:	Date of purchase

- Provide this warranty on the manufacturer's standard form.

Refer to the general section 1237 WARRANTIES for additional requirements.

Requirements

1.4 NO SUBSTITUTIONS
Substitutions are not permitted to any specified system, or associated components and products.

1.5 COMPLIANCE
Fibre cement sheets to AS/NZS 2908.2

2. PRODUCTS

Materials

2.1 HARDIEGLAZE™ SMOOTH LINING
James Hardie HardieGlaze™ Smooth Lining treated cellulose fibre in a matrix of cement and sand autoclaved sheet, 4.5mm thick, with a high gloss polyurethane coating on one side. Sealer to rear face.

2.2 HARDIEGLAZE™ TILE LINING
James Hardie HardieGlaze™ Tile Lining treated cellulose fibre in a matrix of cement and sand autoclaved sheet, 6.0mm thick, embossed with a tile pattern, and finished with a high gloss polyurethane coating on one side. Sealer to rear face.

Components

2.3 BATTENS, TIMBER
Minimum 45mm wide timber with depth suitable for length of fasteners used.

2.4 PACKERS
3 - 4mm timber packers.

2.5 WALL BOARD ADHESIVE
Polyurethane wallboard adhesive. Sometimes used in conjunction with James Hardie Two Sided Adhesive Tape to avoid temporary bracing. Refer to James Hardie installation manual.

Accessories

2.6 NAILS
Aluminium jointers: C25mm stainless steel brad nails
PVC jointers: C25mm stainless steel or galvanized brad nails

2.7 FIXINGS
40mm Nylon Fastfix fasteners supplied by James Hardie.

2.8 PVC JOINTERS AND MOULDINGS FOR 4.5MM LININGS
4.5mm PVC jointers and mouldings.

2.9 PVC JOINTERS AND MOULDINGS FOR 6MM LININGS
6mm PVC jointers and mouldings. Flexible edge 2-piece internal corner and scotia moulds supplied by James Hardie. Includes related PVC accessories.

2.10 POLYETHYLENE TAPE
Self adhesive polyethylene for use behind joints to be filled with sealant.

2.11 SEALANT
Silicone. Refer to the James Hardie technical specifications.

3. EXECUTION

Conditions

3.1 MOISTURE CONTENT
Maximum moisture content of timber framing to NZS 3602.

3.2 PROTECT
Protect joinery, fittings and finishes already in place from damage from lining installation.

3.3 BUILDING
Ensure building is weatherproof before lining work commences.

3.4 STORAGE
Take delivery of products dry and undamaged on pallets, and keep on pallet. Protect edges and corners from damage and covered to keep dry until fixed.

3.5 HANDLING
Avoid distortion and contact with potentially damaging surfaces. Carry sheets vertically. Do not drag sheets across each other, or across other materials. Protect edges, corners and surface finish from damage.

3.6 SUBSTRATE
Do not commence work until the substrate is of the standard required by the relevant manufacturer's technical literature for the specified finish; plumb, level and in true

alignment. Check that the framing set out matches the required sheet joint set out. Maximum moisture content of timber framing to NZS 3602.

3.7 BATCH COLOUR
For colour matching, ensure that sheets of the same colour, to be used in a specific area, are from the same batch.

Application

3.8 ADHESIVE FIXING
Cut, prepare and fix sheets using only adhesive in accordance with James Hardie installation manual.

3.9 TAPE AND ADHESIVE FIXING
Cut, prepare and fix sheets using adhesive and double sided adhesive tape in accordance with James Hardie installation manual.

3.10 TEMPORARY SUPPORT
Where only adhesive fixing is used provide temporary bracing and support in accordance with James Hardie installation manual.

3.11 MOULDING JOINTING
Prepare and fix PVC or aluminium, jointers, corners, mouldings, in accordance with James Hardie installation manual.

3.12 SILICONE JOINTING
Apply Bond Breaker tape to framing at joint locations. Prepare and fix sheets in accordance with James Hardie installation manual. Only use factory-painted, radiused edges at flat joints. Site cut joints may be used at internal corners, but must be sanded and primed to manufacturer's instructions. Mask the joints and apply silicone sealant in accordance with James Hardie installation manual.

3.13 WET AREA JOINTING
Silicone sealant-fill jointers, external and internal corners and cap moulds, to James Hardie installation manual recommendations. Ensure all penetrations are sealed and/or covered to prevent moisture ingress.

3.14 SHOWER DRIP EDGE DETAIL
Form and seal to James Hardie installation manual.

Completion

3.15 PROTECTIVE FILM
Leave the protective film as long as possible to protect the finish, remove just before final clean.

3.16 REPLACE
Replace damaged or marked elements.

3.17 CLEAN
Clean adjoining surfaces and fittings of spots, marks, dust and droppings.

3.18 LEAVE
Leave work to the standard required by following procedures.

3.19 REMOVE
Remove debris, unused materials and components from the site.

5433E ECOPLY® FLOORS

1. GENERAL

This section relates to the use of plywood sheets for floors.

Documents

1.1 DOCUMENTS
The following documents are specifically referred to in this section:

NZBC B1/AS1	Structure
NZS 1170.5	Structural design actions - Earthquake actions - New Zealand
AS/NZS 1604.3	Specification for preservative treatment - Plywood
AS/NZS 2269.0	Plywood - structural - specifications
NZS 3604	Timber-framed buildings

Documents listed above and cited in the clauses that follow are part of this specification. However, this specification takes precedence in the event of it being at variance with the cited document.

1.2 MANUFACTURER'S DOCUMENTS
CHH Woodproducts documents relating to work in this section are:
Ecoply® Structural plywood properties and application manual (March 2009)
Ecoply® Specification and installation guide December 2011

Copies of the above literature are available from Carter Holt Harvey Woodproducts Ltd
Web: www.chhwoodproducts.co.nz/
Telephone: 0800 326 759

1.3 NO SUBSTITUTIONS
Substitutions are not permitted to any specified system, or associated components and products.

Performance

1.4 STRUCTURAL FIXINGS, EARTHQUAKE
Use fixings and methods capable of sustaining the loads appropriate to the area as set out in NZS 3604 and as required by NZS 1170.5.

2. PRODUCTS

Materials

2.1 ECOPLY® FLOORING (T&G) F11 GRADE
Radiata pine veneer ply to AS/NZS 2269.0, CD grade face sanded with blue plastic tongue and grooved long edges and H3.2 CCA treated to AS/NZS 1604.3 when used as a waterproofing membrane substrate.

Components

2.2 SCREWS IN TIMBER
Stainless steel, counter-sunk. Refer to CHH Woodproducts requirements for size and use.
19-21mm plywood: No. 10 x 50mm
25mm plywood: No. 10 x 50mm

2.3 ADHESIVE
Polyurethane adhesive to American Plywood Association specification AFG 01.

3. EXECUTION

Conditions

3.1 HANDLE
Handle sheets carefully and reject those with damaged faces or edges.

3.2 STORE
Store sheets in stacks clear of the ground, supported without sagging on evenly spaced horizontal bearers. Protect from damage and weather.

3.3 SUPPORT FRAMING
Ensure support framing is completed to CHH Woodproducts stated requirements for laying plywood sheets.

Application

3.4 SUPPORT EDGES AND JOINTS
Fully support edges and joints on square edged sheets.

3.5 ADHESIVE FIXING
Apply a 10mm adhesive bead to joists.

3.6 FIXINGS
Minimum 7mm, maximum 15mm from the edge, 150mm centres along edges and 300mm centres on intermediate supports.

3.7 FIXING ECOPLY PLYWOOD SHEETS
Fix sheets to CHH Woodproducts requirements. Lay sheets in a staggered layout, face-grain of sheet at right-angles to support and with sheets in square, true alignment and plane with a 2mm expansion gap for square edge sheets. Nail fix to CHH Woodproducts requirements.

3.8 ADHESIVE FIXING PLYWOOD SHEETS
Fix sheets to CHH Woodproducts requirements. Lay sheets in a staggered layout, face-grain of sheet at right-angles to support and with sheets in square, true alignment and plane with a 2mm expansion gap for square edge sheets. Nail and adhesive fix to CHH Woodproducts requirements.

Completion

3.9 PROTECTION
Protect work from the weather until it is covered, coated or sealed.

3.10 REPLACE
Replace damaged or marked elements.

3.11 LEAVE
Leave work to the standard required by following procedures.

3.12 REMOVE
Remove all debris, unused materials and elements from the site.

6412J JACOBSEN TARKETT LINOLEUM

1. GENERAL

This section relates to floor preparation (thin sheet underlays and floor levelling compound) and the supply and installation of **Tarkett Linoleum 2.5mm** homogeneous floor covering with jute backing.

Documents

1.1 DOCUMENTS
The following documents are specifically referred to in this section:

NZBC D1/AS1	Access Routes
NZS/AS 1884	Floor coverings - Resilient sheet and tiles - Installation practices
AS/NZS 3661.1	Slip resistance of pedestrian surfaces - Requirements
BRANZ BU 330	Thin flooring materials - 2 preparation and laying

1.2 MANUFACTURER/SUPPLIER DOCUMENTS
Manufacturer's and supplier's documents relating to this part of the work:
- Linoleum installation
- Linoleum maintenance
- Linoleum technical information
- Linoleum colours: Veneto, allegro and etrusco

Manufacturer/supplier contact details

Company:	Jacobsen
Web:	www.jacobsens.co.nz
Email:	4info@jcs.co.nz
Freephone:	0800 800 460
Freefax:	0800 800 461

Warranties

1.3 WARRANTY - MANUFACTURER/SUPPLIER
Provide a material manufacturer/supplier warranty:
5 years: Materials

- Provide this warranty on the standard form in the general section 1237WA WARRANTY AGREEMENT.
- Commence the warranty from the date of practical completion of the contract works.

Refer to the general section 1237 WARRANTIES for additional requirements.

1.4 WARRANTY - INSTALLER/APPLICATOR
Provide an installer/applicator warranty:
1 years: Execution

- Provide this warranty on the standard form in the general section 1237WA WARRANTY AGREEMENT.
- Commence the warranty from the date of practical completion of the contract works.

Refer to the general section 1237 WARRANTIES for additional requirements.

Requirements

1.5 QUALIFICATIONS
Layers to be experienced, competent trades people familiar with the materials and techniques specified.

1.6 NO SUBSTITUTIONS
Substitutions are not permitted to any of the specified systems, components and associated products listed in this section.

Performance

1.7 SLIP RESISTANCE FOR ACCESS ROUTES
Slip resistance to comply with NZBC acceptable solution D1/AS1 2.0 Level access routes and 3.0 Ramps.
- when in place on a level access route, to have a mean coefficient of friction (μ) not less than 0.4 when tested in accordance with AS/NZS 3661.1.
- when in place on a sloping access route, to have a coefficient of friction (μ) not less than 0.4 + 0.0125S (S = slope of surface expressed as a percentage).

Provide evidence that the vinyl complies with the standard of performance specified.

1.8 CERTIFY SLIP RESISTANCE
Provide certificates and any other evidence at the time of selection/supply that the vinyl complies with NZBC verification method D1/VM1 and acceptable solution D1/AS1.

2. PRODUCTS

2.1 MASONITE UNDERLAY
CSR Masonite underlay, 5.5mm thick.

2.2 LINOLEUM SHEET
Tarkett Linoleum, with XF finish to ensure a low maintenance system.

2.3 LINOLEUM COVINGS
Cove flooring using a 25mm radius cove former or a preformed linoleum set in cove.

2.4 COVE CAPPING
Jacobsen PVC top cap to top of coved linoleum.

2.5 ADHESIVE
Uzin Linoleum Adhesive LE44.

2.6 THERMO-WELDING
Manufacturer supplied, colour matched welding rod, using the Tarkett speed weld nozzle.

3. EXECUTION

3.1 GENERALLY
To manufacturer's requirements and NZS/AS 1884.

Preparing substrate

3.2 NEW TIMBER BOARD OR PARTICLEBOARD
Clear substrate of debris, clean off surface contamination and carry out surface repairs using Roberts levelling compounds. Carefully feather out at perimeters of repaired areas. Grind smooth, then vacuum to remove all dust. Check for moisture content and do not commence final sanding or laying until readings for the whole area show a moisture content of: -
- 8-12% for air conditioned buildings
- 10-14% for intermittently heated buildings
- 12-16% for unheated buildings

3.3 TIMBER BOARD OR PARTICLEBOARD, LAYING MASONITE UNDERLAY
Underlay using 5.5mm Masonite with joints staggered and with a 0.4mm gap between sheets and 3mm gap at all perimeters. Use 22mm narrow crown staples at 150mm centres throughout the whole sheet and 75mm apart, 10mm in from the edges of the sheets. Punch staples 0.4mm below the surface and sand joins level.

3.4 STORAGE
Accept rolls of **Tarkett Linoleum**, packages of tiles and accessories undamaged and dry. Store rolls upright with other material on level surfaces in non-traffic, non-work areas that are enclosed, clean and dry.

3.5 HANDLING
Avoid distortion, stretching, marking or damage to edges while shifting, unrolling and handling sheet, tiles and accessories. Do not use damaged material.

3.6 PREPARATION
Check that each colour supplied is from the same batch. Follow the linoleum manufacturer's requirements for conditioning of rolls and the working temperatures and conditions before, during and after laying. Protect work from solar heat gain and switch off under-floor heating during and for 48 hours either side, of the work period.

3.7 DO NOT START
Do not start work before the building is enclosed, wet work complete, doors hung and lockable, finishes and trim complete, and good lighting available.

3.8 INSPECT
Inspect the substrate to ensure it is of the standard required for work in this section. Commencement of the work means the substrate is accepted by the floor layer as satisfactory.

3.9 LAYING
Carry out the whole of this work to NZS/AS 1884, BRANZ BU 330 and the flooring manufacturer's requirements.

3.10 TECHNIQUE
Before beginning the installation confirm the proposed layout of material, location of seams and other visual considerations of the finished work.

Linoleum floor laying

3.11 ADHESIVE APPLICATION
Apply the adhesive using the correct notched trowel. Follow requirements for open time, taking note of substrate porosity, ambient temperature and relative humidity. Remove excess adhesive as the work proceeds using required techniques.

3.12 LAYING LINOLEUM SHEET
Roll out, cut, leave to condition and install sheet linoleum to the manufacturer's requirements. Ensure there are no air bubbles or twisting, that the seams are kept clear of adhesive, and immediately the sheet is adhered roll with a 68kg roller.

3.13 THERMO-WELDING SHEET
Machine groove and thermo-weld all seams in specified areas, using the Tarkett Weld nozzle, heating the sheet and weld rod to a sufficient temperature to melt and fuse them together into a single mass. Trim the weld to leave a smooth, flush surface with the sheet. Thermo-welding to include internal and external mitres.

3.14 CROSS JOINS
Plan and allow cuts to avoid cross joins. Obtain written confirmation before proceeding if cross joins are unavoidable.

3.15 COVING
Cove flooring to the specified height and finish off as detailed.

3.16 COMPLETE MITRES
Thermo-weld all internal and external mitres.

3.17 LEAVE FLOORING
Leave flooring surfaces free of adhesive, dirt and debris. Vacuum off, damp mop with a low foam neutral detergent with a pH level of 7 to 8. Rinse and dry buff with a high speed machine using a red pad.

Completion

3.18 ACCEPTANCE
Arrange for a final inspection of the completed work by the owner. Protect all surfaces until the completion of the works.

3.19 REMOVE
Remove unused materials from the site.

7151 SANITARY FIXTURES, TAPWARE & ACCESSORIES

1. GENERAL

This section relates to the supply and installation of sanitary fixtures, tapware and sanitary accessories.

1.1 RELATED WORK
Refer to 7120 or 7123 HOT AND COLD WATER SYSTEM for hot water cylinders.
Refer to the electrical section/s for electrical connection of accessories.

Documents

1.2 DOCUMENTS
The following documents are specifically referred to in this section:

NZBC E3/AS1 Internal moisture
NZBC F2/AS1 Hazardous building materials
NZBC G1/AS1 Personal hygiene
NZBC G12/AS1 Water supplies
NZBC G13/AS1 Foul water
NZBC G13/AS3 Plumbing and drainage
AS/NZS 1730 Washbasins
AS/NZS 3500.1:2003 Plumbing and drainage - water services
AS/NZS 3500.2:2003 Plumbing and drainage - sanitary plumbing and drainage
AS/NZS 3662 Performance of showers for bathing
Plumbers, Gasfitters and Drainlayers Act 2006

Documents listed above and cited in the clauses that follow are part of this specification. However, this specification takes precedence in the event of it being at variance with the cited document.

Requirements

1.3 QUALIFICATIONS
Plumbers to be experienced competent workers, familiar with the materials and the techniques specified. Carry out all work under the direct supervision of a Certifying Plumber under the Plumbers, Gasfitters and Drainlayers Act 2006.

1.4 SUBMIT A SUPPLIER'S SCHEDULE

2. PRODUCTS

2.1 SANITARY FIXTURES

2.2 TAPWARE

3. EXECUTION

3.1 QUALITY STANDARDS INCLUDING NZBC G13/AS1
Installation work to comply with NZBC G1/AS1, NZBC G12/VM1, NZBC G12/AS1, NZBC G13/AS1 and the fixture manufacturer's requirements.

3.2 SUBSTRATE
Ensure substrate and fixings will allow work of the specified standard.

3.3 CO-ORDINATION
Do not proceed if the points of supply and drainage services do not match the points of the fixtures without force or distortion.

3.4 INSTALLATION REQUIREMENTS INCLUDING NZBC G13/AS1
Install to NZBC G1/AS1, NZBC G12/VM1, NZBC G12/AS1, NZBC G13/AS1, NZBC E3/AS1 and to the fixture manufacturer's installation requirements for each component. Carry out preparatory and assembly work, including connections to supply and drainage services and the application of slurries and sealants in sequence.
Seal between all sanitary fixtures and wall linings, fixtures and the tops they are in, the tops and wall linings, to NZBC E3/AS1, 3.2.2. Fixtures include baths, basins, tubs or sinks, Tops include, vanities, bath surrounds, sink benches, etc, and there upstands.

3.5 PROVIDE SUPPORT
Confirm fixing points needed for each unit and provide solid blocking at each fixing bracket location.

Conditions - sanitary accessories

3.6 INSPECTION
Before starting the installation of proprietary items, check relevant spaces and wall and floor finishes for any condition that would not allow the proper installation of any unit. Do not proceed until such conditions have been remedied.

Installation - sanitary fixtures

3.7 INSTALLING TOILET PAN
Carry out preparatory and assembly work, including connections to supply and drainage services and the application of slurries/bedding and sealants in sequence. Fit the toilet pan in position, plumb, level, flush and rigid without stressing the attachment points of the component. Fixings to be corrosive resistant. Fit seat.

3.8 INSTALLING CISTERNS
Fit firmly in place and connect the specified cisterns from the supply services through the flush pipes to the relative fixtures in the positions as detailed all plumb and level.

Installation - Basins

3.9 INSTALLING VANITIES - INTEGRAL BASINS
Install in accordance with the manufacturer's requirements. Connect to supply and drains through trap to the drainage system. Seal top and upstand to wall surface to comply with NZBC E3/AS1.

Installation - Showers

3.10 INSTALLING SHOWER FITTINGS
Shower waste, mixer and rose to be install to NZBC G1/AS1 and to AS/NZS 3662.

3.11 INSTALLING SHOWER ENCLOSURES AND WALL LININGS
Install in accordance with NZBC E3/AS1. Sit tray firmly in place as detailed, to levels shown and connect to drainage service, ready for following work. Fit screen and door unit to manufacturer's details. Lining materials and finishes to comply with NZBC E3/AS1.

Installation - Miscellaneous

3.12 INSTALLING SANITARY FIXTURES & ACCESSORIES - PEOPLE WITH DISABILITIES
Install fixtures to NZBC G1/AS1: Part 3 and Part 4 and to comply with the relevant layouts shown in Figures 5,6,7,8 and 9. Provide number of facilities in accordance with NZBC G1/AS1 tables 1, and 2.

Application - tapware

3.13 GENERAL
To AS/NZS 3500.1 dated 2003 and in accordance with the manufacturer's requirements. Maintain safe water temperatures to comply with NZBC G12/AS1.

Application - sanitary accessories

3.14 INSTALLING ACCESSORIES
Fit specified fittings firmly in place at required dimensions relative to floor and adjoining sanitaryware fittings, all plumb and level.

3.15 LOCATE
Locate units at heights and/or locations shown on the drawings, or as required to comply with NZBC G1/AS1. For any dimension not shown or known, request direction before proceeding.

3.16 CUTTING AND FITTING
Where cutting and fitting of the substrate is necessary for installing any unit, carry out this work before the painting or finishing of that surface. Remove any hardware when required for painting, placing it in the packaging or carton originally supplied and returning it to the secure store until ready for re-installation.

3.17 INSTALLING UNITS
Install each unit in accordance with the proprietary fixture manufacturer's requirements, using the templates and tools supplied or recommended by them. Set units level, plumb and true to line and required location, with moving parts and actions freely and easily operating. Do not make any modifications to supplied units.

Completion

3.18 REPLACE
Replace damaged or marked elements.

3.19 PROTECTIVE COVERINGS
Leave fixtures, fittings and accessories clean and unblemished with stickers and protective coverings removed, with supply and drainage connections and all parts fully operating and working. Leave the whole of this work free of blemishes, undamaged and to the standard of finish required for following work.

3.20 REMOVE
Remove debris, unused materials and elements from the site.

7701 ELECTRICAL BASIC

1. GENERAL

This section relates to the wiring for domestic and small scale commercial installations, including:
- power
- lighting
- complete with componentry
- electrically-powered fittings

1.1 ABBREVIATIONS AND DEFINITIONS
The following abbreviations apply specifically to this section:

PCB	printed circuit board
RCCB	residual current-operated circuit breakers
RCD	residual current device
TPS	tough plastic sheathed

Documents

1.2 DOCUMENTS
The following documents are specifically referred to in this section:

NZBC E2/AS1	External moisture
NZBC G4/AS1	Ventilation
NZBC G9/AS1	Electricity
AS/NZS 1125	Conductors in insulated electric cables and flexible cord
AS/NZS 1768	Lightning protection
AS/NZS 3000	Electrical installations (known as the Australian/New Zealand Wiring Rules)
AS/NZS 3008.1.2	Electrical installations - Selection of cables - Cables for alternating voltages up to and including 0.6/1 kV - Typical New Zealand installation conditions
AS/NZS 3100	Approval and test specification-general requirements for electrical equipment
AS/NZS 3112	Approval and test specification - Plugs and socket-outlets
AS/NZS 3113	Approval and test specification - Ceiling roses
AS/NZS 3190	Approval and test specification - Residual current devices (current-operated earth-leakage devices)
AS/NZS 3350.1	Safety of household and similar electrical appliances - General requirements
AS/NZS 5000.2	Electric cables - Polymeric insulated - for working voltages up to and including 450/750v

Electricity (Safety) Regulations 2010

Warranties

1.3 WARRANTY
Warrant the complete electrical installation under normal environmental and use conditions against failure of materials and execution.

1 year:	Warranty period

Refer to the general section for the required form of 1237WA WARRANTY AGREEMENT and details of when completed warranty must be submitted.

Requirements

1.4 COMPLY
Comply with the Electricity (Safety) Regulations 2010, AS/NZS 3000, AS/NZS 3008.1.2 and TCF Premises Wiring Code of Practice for listed and prescribed work and with the utility network operator's requirements. Apply for the service connection. Arrange for the required inspections of listed work. Pay all fees.

1.5 QUALIFICATIONS
Carry out work under the supervision of an electrical licensed supervisor.

1.6 SAFETY OF INSTALLATION - DESIGN BY ELECTRICIAN
Before installation work commences provide a declaration of conformity. The declaration of conformity is to comply with the Electrical (Safety) Regulations (2010), regulations 57 and 58. It must be signed by the designer of the installation.

1.7 ELECTRICAL CERTIFICATE OF COMPLIANCE
Supply a certificate of compliance (CoC) to the owner, and if required the NUO, as required by the Electricity (Safety) Regulations (2010), prior to connection.
- Arrange for the NUO to inspect before the meter installation, listed work inspection, polarity check and supply becoming live.
- Arrange for an inspector to inspect as required by regulation 70.

2. PRODUCTS

2.1 MAINS SUPPLY, SINGLE PHASE
Tough plastic sheathed neutral screened cable to AS/NZS 4961 and AS/NZS 3008.1.2, with a minimum rating of 60 amps per phase. Include pilot cable where required by network utility company.

2.2 CABLES
Tough plastic sheathed copper conductors to AS/NZS 5000.2, stranded above 1.0mm², and to AS/NZS 3008.1.2. Minimum sizes as below. Increase sizes if the method of installation, thermal insulation, cable length or load will reduce the cable rating below that of the MCB rating, or produce an excessive voltage drop.
Lighting circuits: Domestic: 1.5mm² on 10 amp MCBs
Power circuits: 2.5mm² on 16 amp MCBs for domestic insulated construction, or filled cavity

Heat resistant cable for final connections to all heated appliances, and high temperature cable in ambient conditions that may be above 35°C.

2.3 CIRCUIT PROTECTION
General requirements including main switch 63A or 100A. Residual current protection 30mA, ensure RCCBs' meet Type A and comply with AS/NZS 3190. MCBs to 4.5kA or 6kA rated.

2.4 WALL BOXES
Standard grid size or equivalent to be manufactured from plastic or metal, with 2 or more gang size to be metal with steel inserts for accessory securing screws. Screw fixed.

2.5 SWITCH UNITS
Single pole switches to be 16 amp minimum rated, double pole or intermediate to be 16 amp minimum rated. All switches to be 230 volt a.c. polycarbonate flushplate units. Refer to drawings/schedules for number of switches per unit, dimmer units, neon (indicator or toggle) units and 2 way units.

2.6 SWITCHED SOCKET UNITS
10 amp, 230 volt flat 3 pin socket outlets fitted with safety shutters and manufactured to AS/NZS 3100, AS/NZS 3112 and AS/NZS 3113, single or multi gang as detailed.

2.7 BATTEN HOLDERS
Standard white plastic bayonet cap, with cap angled where wall mounted. Brass liners.

2.8 LIGHT FITTINGS
Fluorescent and High Intensity Discharge fittings with low loss control gear and power factor corrected to 0.95 minimum. Control gear suitable for dimming if this is required. All fittings complete with lamps; Incandescent GLS lamps pearl, coiled-coil 230v rated,

bayonet cap; Fluorescent triphosphor 2700K; CFL; halogen ELV 12v dichroic reflector with cover glass unless detailed otherwise.

2.9 RESIDENTIAL RECESSED LIGHT FITTINGS
Residential recessed luminaires to AS/NZS 60598.2.2, types IC-F, IC, CA-80 or CA-135 only.

2.10 SPACE HEATERS
Fixed wired room heaters radiant or convector, and compliant with AS/NZS 3350.1. Flush or surface mount, fitted with safety cut-outs.

2.11 EXHAUST FANS
Ceiling, wall or duct mounted exhaust fans for ventilation to NZBC G4/AS1, and compliant with AS/NZS 3350.1.

2.12 HEATED TOWEL RAILS
Fixed wired heated towel warmers, double insulated, IPX4 splash-proof, compliant with AS/NZS 3350.1, scratch resistant powdercoated or chrome finish.

3. EXECUTION

3.1 CIRCUIT PROTECTION
Install MCBs at distribution board to AS/NZS3000 to protect each final sub circuit.

3.2 EARTH BONDS
Bond together and to earth all plumbing fittings not adequately isolated, to AS/NZS 3000, the Electricity (Safety) Regulations 2010 and the fitting manufacturer's requirements.

3.3 MAIN EARTH
Provide a plastic toby box to contain and protect the earth electrode. Fix the connecting earth wiring closely and securely against wall surfaces.

3.4 EARTH LEAKAGE PROTECTION
Install RCD protection to AS/NZS 3000.

3.5 DOMESTIC INSTALLATIONS
Install 30mA RCD protection at the distribution board for all final sub circuits to control socket outlets and lighting except for fixed or stationary cooking equipment, to AS/NZS 3000.

3.6 HIGH RISK AREA INSTALLATIONS
Install 30mA RCDs at the distribution board for areas not covered in Domestic installations, or using fixed wired RCD protected socket outlets in areas that may represent increased risk of electric shock to the user:
- Wet areas: bathrooms, laundries, kitchens.
- Near pools and water features.
- Where intended for use with cleaning equipment.
- Hand-held tools subject to movement in use, i.e. work-shops, garages.

3.7 SET-OUT
The position of outlets and equipment shown on drawings is indicative of requirements. Confirm documents and site conditions are not in conflict with other services or features. Resolve conflicts and discrepancies before proceeding with work affected. Confirm on site the exact location, disposition and mounting heights of all outlets, fittings, equipment, penetrations, and use of exposed wiring. Fix outlet items level, plumb and in line.

3.8 CABLING
Install wiring systems to AS/NZS 3000. All cabling run concealed. No TPS cable laid directly in concrete. Locate holes in timber framing for the passage of cables at the centre line of the timber member. Install cable in conduits where required to pass through concrete or underground. In walls run cabling horizontally and vertically in straight lines.

In ceilings either run cabling along ceiling framing or attached to catenary wires. Clip cabling to ceiling framing/catenary wires.

3.9 CABLING CIRCUITS

Install all circuits with the appropriately rated cable and circuit protection. Install with a maximum of 8 light switch units or 4 double or single switched socket units on any circuit. Minimum 2 lighting circuits per floor. Separate circuits for all electric heating appliances. Kitchen sockets to be on at least two different circuits.

3.10 WALL BOXES

Mount flush in cavity construction size to fit products selected. Fix vertically mounted wall boxes to studs. Screw fix horizontally mounted switched socket outlet wall boxes to solid blocking or nogs. Fix switch panel wall boxes to solid blocking.

3.11 SWITCH AND SOCKET UNITS

Fit all single and double switch units, all sockets to the following heights (to the centre of the unit) unless shown otherwise on the drawings.

Switch Units: 1000mm above finished floor
Socket Units: 150mm above work benches
400mm above finished floor

Mount light switches and switch socket outlets vertically and socket units horizontally. Label all switch units that control electrical equipment or special lighting circuits by colour filled engraving on the switch. Use proprietary engraved switch mechanisms where applicable.

3.12 LIGHT FITTINGS

Install light fittings in locations and at heights specified and confirmed by the owner, in accordance with the fitting manufacturer's requirements.

3.13 RECESSED LIGHT FITTINGS - CLEARANCE TO INSULATION

Non-residential applications;
The clearance between insulation and recessed downlights;
- Leave 100mm gap to AS/NZS 3000, figure 4.9
- Provide larger gaps where required by the downlight manufacturer

Residential applications;
- Ensure new recessed downlights are one of the new classes classified in AS/NZS 60598.2.2; CA 80, CA 135, IC and IC - F.
- Classification type CA 80, CA 135, to AS/NZS 60598.2.2; insulation can abut the sides (wrapping around the sides)
- Classification type IC and IC - F, to AS/NZS 60598.2.2; insulation can abut and cover over the top of the downlight
- Provide larger gaps where required by the light manufacturer
- In a retrofit situation where the insulation is non-approved or unknown, ensure 100mm clearance from the insulation to AS/NZS 3000, figure 4.9.

3.14 SPACE HEATERS

Install to the heater manufacturer's requirements, and to AS/NZS 3000. Fit neatly and without damage to surrounding finishes. Ensure control switches and thermostats are fitted to appliance, or otherwise connect to a control switch located adjacent to the heater and a remote thermostat.

3.15 BATHROOM ELECTRICAL FIXTURES

Install all electrical fixtures. Connect the following bathroom and toilet electrical items:
- Heated towel rails: Install to manufacturers requirements and installed in accordance with AS/NZS 3000 and the NZBC G9/AS1
- Mirror demisters: Locate centrally above the wash hand basin(s). Connect wiring to room lighting unless specified otherwise.
- Exhaust fans: Install exhaust fans to manufacturer requirements. Installed in accordance with AS/NZS 3000 and NZBC G4/AS1.

3.16 LABELLING

Include label under each controller, switch and circuit breaker on distribution boards. Include a warning notice if light dimmers are used in the installation. List the rating of each circuit.

Completion

3.17 COMPLETION

Leave installation operating correctly, with equipment clean and operational.

8420 MISCELLANEOUS SITE WORKS

1. GENERAL

This section relates to the supply and installation of hard landscaping including:
- paths
- other minor structures

1.1 DOCUMENTS
The following documents are specifically referred to in this section:

NZS 3104	Specification for concrete production
NZS 3114	Specification for concrete surface finishes
NZS 3124	Concrete construction for minor works
AS/NZS 4671	Steel reinforcing materials

1.2 QUALIFICATIONS
Landscapers to be experienced, competent trades people familiar with the materials and techniques specified.

2. PRODUCTS

2.1 CONCRETE
Prescribed mix, maximum aggregate size 19mm to NZS 3104.

2.2 SITE MIXED CONCRETE
To NZS 3124. Prescribed mix 17.5 MPa minimum strength, using either separate batching of sand and coarse aggregate to NZS 3104, or builder's mix.

2.3 REINFORCEMENT
Welded reinforcing mesh to AS/NZS 4671.

3. EXECUTION

3.1 CONSTRUCT CONCRETE PATHS AND DRIVEWAYS
Excavate for path thickness and hardfill. Remove plants, tree roots and soft fill to firm subgrade. Compact with a plate vibrator to form a level surface of even bearing. Place and compact a layer of basecourse. Reinforcement where scheduled to AS/NZS 4671. Place concrete with a fall of 1:100 (minimum) and construction joints/saw cuts, thickness and finish to NZS 3114 as scheduled and NZS 3124 Specification for concrete construction for minor works.

Wetroom Concept

Tarkett COMMERCIAL

INSTALLATION INSTRUCTIONS

VINYL

Wetroom Concept - Installation instructions

This information is subject to change (11/2008).

Wetroom Concept is a system for wet areas comprising floor and wall coverings, drains and accessories.

All Tarkett resilient flooring products are composed of the highest quality raw materials available and are manufactured under strict production control. They will meet the most exacting requirements of architects, contractors, owners and users. Top quality material is only half of the story: a floorcovering's beauty and serviceability is dependant also on proper installation over a suitable subfloor. By carefully using these instructions, it should be simple matter to make each installation a job of which all can be proud.

BEFORE INSTALLATION

• Handling, storage and acclimatisation

- Care should be taken when handling all types of floor and wall coverings to ensure that safety procedures are followed and damage does not occur to the material.
- Check the material for visible defects and/or damage before and during installation.
- Use the same batch number for each continuous surface. Save the details for each roll until the installation is completed.
- The rolls shall be stored in an upright position.
- It is important that the rolls are stored for 24-48 hours before installation at a minimum temperature of 15°C (ideally around 18°C). The pieces of flooring shall be cut to the required lengths, leaving a few centimetres more and stored in the room where they are to be installed. This temperature should be maintained throughout the installation.
- The minimum temperature of the subfloor should be 15°C.
- The relative humidity inside the room should be 50-60%.

• Underfloor heating

It is imperative that underfloor heating systems have been previously commissioned and found to be functioning correctly prior to the installation of the floorcovering. Ensure that the underfloor heating system is switched off 48 hours prior to the floorcovering installation commencing and remains off for at least 48 hours after the installation is complete. During the period of decommissioning of the underfloor heating system, an alternative heating source should be provided, if required, to ensure that the area of installation is kept at a constant temperature of 15°C - 27°C. Gradually increase the temperature over a number of days by only a few degrees per day until the desired room temperature is reached. The temperature should never exceed the floorcovering industry agreed maximum of 27°C at the underside of the floorcovering (the adhesive line).

• Preparation of the subfloor

The subfloor must be smooth, level, clean, dry, structurally sound, moderately absorbent and not exposed to high humidity. The preparation/dryness of the subfloor and installation procedures should all be as per the current relevant building standards in New Zealand. The dryness of a concrete subfloor should be below 75% RH when tested with a Surface Mounted Hygrometer.

IMPORTANT: to allow perfect water drainage, the subfloor should be a slope of at least 1 cm per metre towards the drain.

- Use a water-resistant levelling compound when patching or filling in areas where wet conditions exist.
- Subfloors made of particle board shall be installed according to the respective manufacturer's directions.
- If the subfloor is painted, damp-proofed or non-absorbent, then you must allow the adhesive to become "tacky" before installing the floor.
- Seams are not recommended within a 0.5 m radius of floor drains. Contact Jacobsen Creative Surfaced Ltd if unsure about any part of the installation.
- For specific subfloor types and preparation, please contact Jacobsen Creative Surfaces Ltd.

Note: although Tarkett may on occasion list a choice of adhesive and levelling compound manufacturers and types, we do not however guarantee the products listed. The list of products and manufacturers are not guaranteed complete or current. Tarkett would not accept any liability for any of these products failing to perform in conjunction with any of their products. It is the responsibility of the adhesive and levelling compound manufacturer and flooring contractor to ensure the products being used are appropriate for use and applied in accordance with the manufacturers' recommendations.

• Adhesives

Tarkett recommends the use of water-dispersed Acrylic adhesive for the Wetroom Concept. Contact Jacobsen Creative Surfaces Ltd for specific brand recommendations.

Please Note: Use of other adhesive types may void any material warranties. It is the responsibility of the adhesive supplier and flooring contractor to ensure adhesives being used are appropriate for use and applied in accordance with the manufacturer's recommendations.

• Protection of installation

If building work is carried out after installation, the floor should be covered for protection. Masking tape must not be stuck directly to the floor. If it is necessary to put the floorcovering to use at an early stage, protect the installation with hardboard or plywood.

• Technical assistance

Companies that have not had experience of using Wetroom Concept should contact Jacobsen Creative Surfaces Ltd for advice.

• Project Management

The reputation of Tarkett Wetroom Concept is based on more than 20 years of quality installation. We advise project managers to ascertain the experience of the company bidding to install Wetroom Concept.

Quick overview

Start with the installation of a drain and minimum of 30 cm from the walls (measuring from the edge of the drain).

The flooring is coved to approximately 15 cm up the wall. The Wall and Floor vinyl should be joined using the JCS Floor/Wall Finishing Strip (refer diagram below). When using Tarkett Eminent Safe T and/or Universal SafeTred the overlap method is acceptable. For best results the top section of the coved vinyl should be tapered off gradually to the wall using a water-resistant levelling compound or a 2mm Reducer Strip. Wallcovering should overlap coved vinyl by at least 3cm.
When using a 2mm Wall Vinyl the coved Vinyl and Wall Vinyl should be thermo rod welded.

To achieve a perfect watertight installation, all the floor and wall sheets must be hot welded using Tarkett welding rods. For the best result, use a speed welding nozzle. For removal of excess welding rod use a special trimming knife or an equivalent tool.

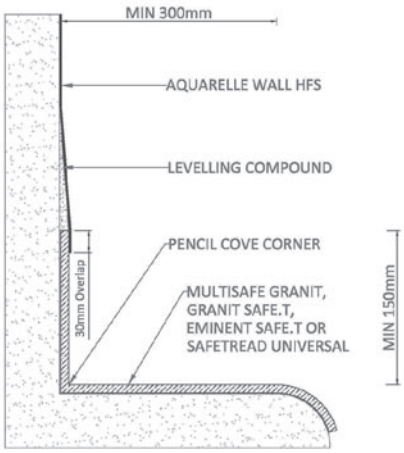

With junction coving and cove former

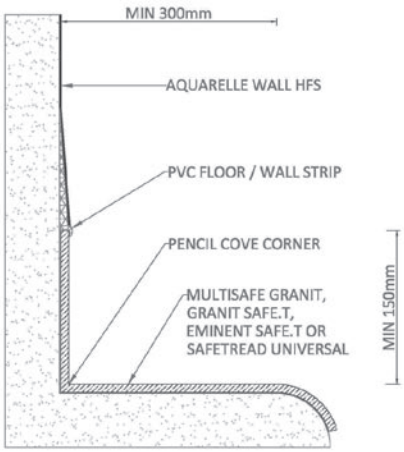

With levelling compound and without cove former

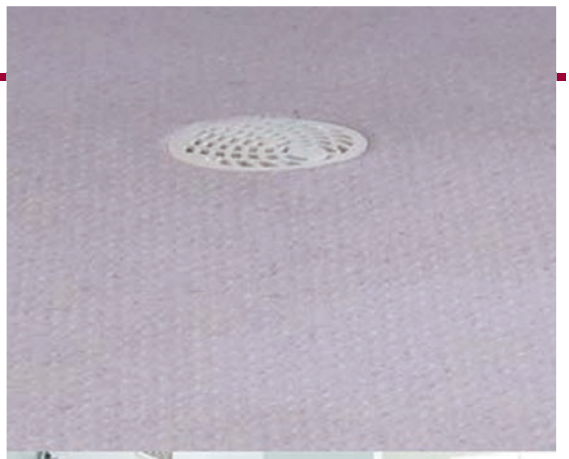

Installing the drain

IMPORTANT: to allow perfect water drainage, the subfloor should be foreseen with a slope of at least 1cm per metre towards the drain.

The drain must be located a minimum of 30cm from the walls and should be installed by a plumber.

• Floor waste

Ensure floor waste used is suitable for vinyl. The vinyl MUST be able to be feed into the waste and clamped. The following are suitable and recommended:

- Allproof Industries Vinyl Clamp Ring Gate (flow through)
- Metrix 5700 Valentin Series (in-built trap)

Vinyl Clamp Ring Grate

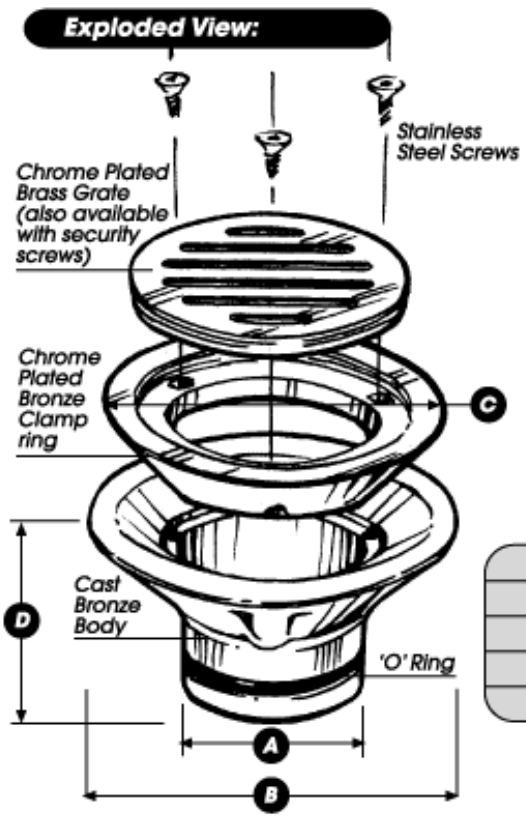

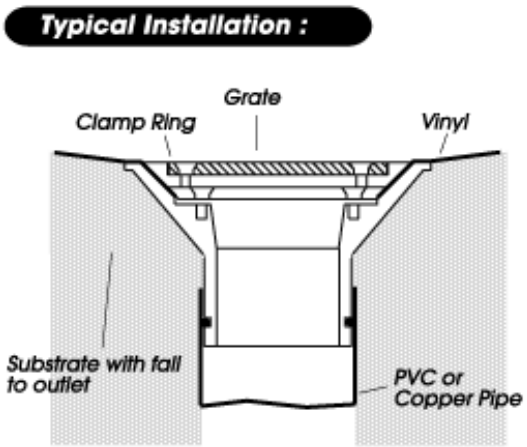

Data	50mm	80mm	100mm
A	50	75	100
B	115	150	170
C	95	130	145
D	55	60	55

Installing the floorcovering

MULTISAFE GRANIT, EMINENT SAFE T or SAFETRED UNIVERSAL

• Cutting the Sheets

When cutting the sheets, make sure there is enough material for the coving (the sheets should be cut longer than the room length). During the laying, the temperature of the subfloor and the room should not be lower than 15°C. Pre-cut 24 hours before gluing and lay the flooring flat to allow the material to relax and adapt to room temperature. This is especially important for long lengths.

When a sheet fits the width of the room, make a cross mark on the bottom of the material and the subfloor to indicate the centre. This will help you place the sheet in its exact position. The cross marks should coincide when placing the material.

When the width of the room exceeds the sheet width (more than one piece has to be installed to cover the area), mark a line on the floor parallel to the longitudinal wall at a distance equivalent to 12 cm (about 4.5 in.) less than the sheet width. Mark the room's centre on this line. On the bottom of each sheet, mark their centre. The cross marks on the subfloor and sheets shall coincide.
Sheets shall always be reversed to prevent shading effects. Caution: all welded joints must be at least 30 cm from the drain.

• Tracing the coving

Using a straight edge and pencil, mark up to a height of about 15 cm all walls where the flooring will be coved. When marking, only use a lead pencil.

Apply the adhesive on the walls up to the marked line, using a fine notched trowel. Spread some of the adhesive out on to the floor.

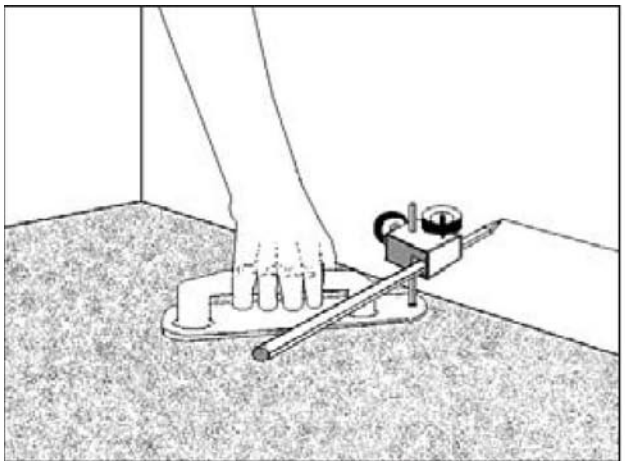

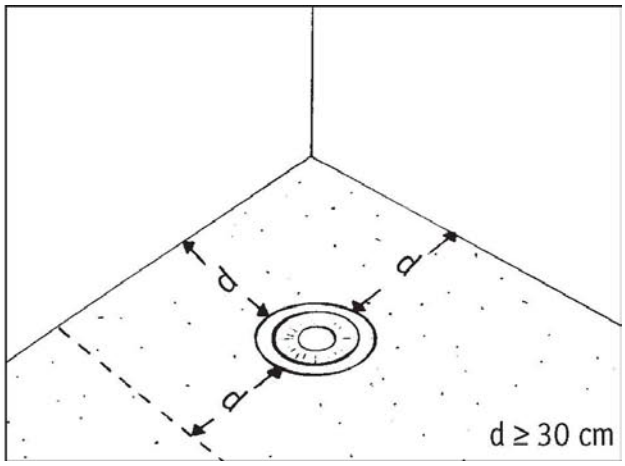

Installing the floorcovering

• Drain pipes and floor drains

IMPORTANT: no glue around and inside the drains!

Above drain pipes, fold the sheet against the pipe and mark the center of the pipe on the back of the floor.

Cut a hole about 25 mm smaller than the diameter of the pipe. Cut the hole at the start of the fold. Warm the sheet with a hot air gun and press it over the pipe.

• Laying and coving

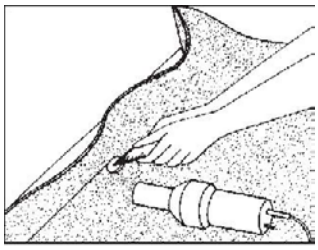

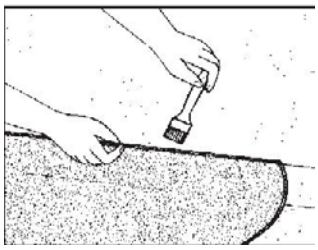

In areas where one sheet is sufficient to cover the floor, the adhesive can be applied over the entire
surface area before installing the sheet.
In areas where several sheets are necessary, fold back and loosen the sheets covering half of the floor area. Apply the adhesive on the subfloor with a fine-notched trowel (300 to 350 g/m2). Use a soft brush in hard-to-reach areas. Follow the respective manufacturer's instructions for the adhesive you have selected.

Use a corner roller to obtain smooth corners when coving. With the corner roller, press the material firmly into the juncture between the floor and wall.

After waiting for the adhesive to become tacky, lay the first section of the sheet (or sheets). Position carefully. Raise the second section of the sheet or sheets and continue laying using the acrylic adhesive.

The coving must be fixed with double-gluing using a suitable adhesive (adhesive applied using a brush on the substrate and the reverse), in accordance with the time required for the adhesive to become tacky.

Installing the floorcovering

• Corners

Inside corner

When fitting in-corners, make a cut in the excess material starting about 5 mm above the floor in the corner. The material has to be heated before folding, heat the area between the sheet and the wall. This provides better contact between the sheet and adhesive.

Press the material firmly into the corner with a corner roller.

The corner seam shall be placed on one of the walls at a 45° angle

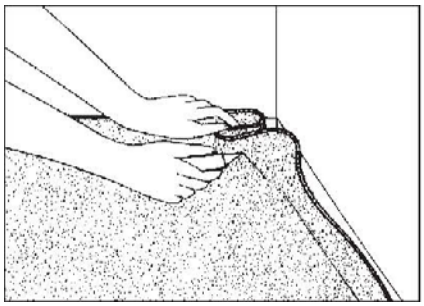

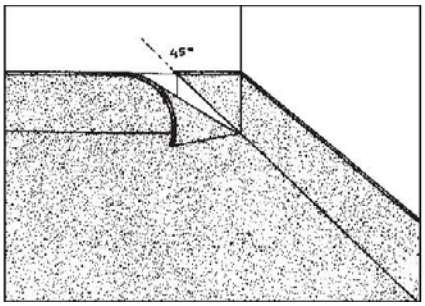

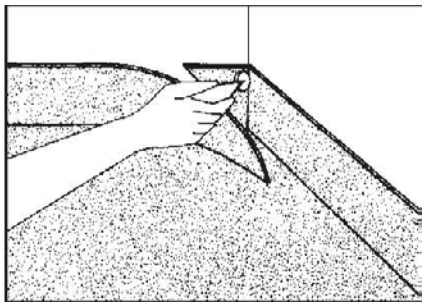

Outside corner

When fitting an out-corner. The sheet is folded against the corner and cut about 5 mm from the floor. The guidelines in the picture show the corner on the sheet and the position of the cut at about a 45° angle. Then a diagonal cut is made as shown.
To adhere the triangle-shaped piece more simply and securely, cut a groove on the back of the triangle with a corner knife. The depth of the groove shall be no deeper than half of the sheet thickness.

The triangle can now be folded and placed on the corner. It will overlap the coved floor. Cut through the overlapping material to make a tight fit.

Glue the substrate and the reverse of the flooring with a suitable adhesive.

When the adhesive becomes tacky, press the upturn against the wall.

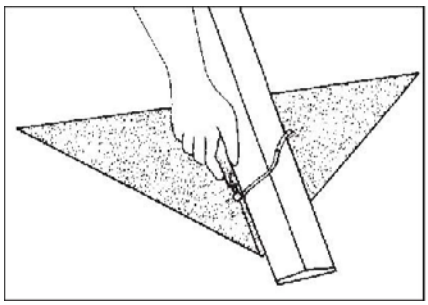

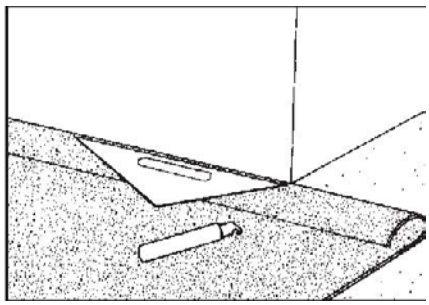

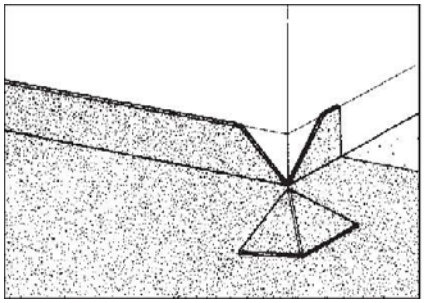

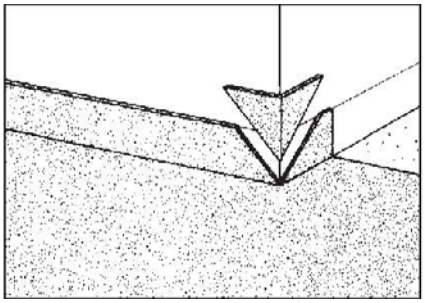

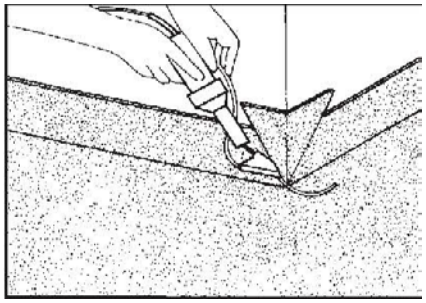

Installing the floorcovering

• Hot Welding

Important: always wait 24 or 48 hours after laying before welding the floor joint using the welding rod. Do not start welding until the adhesive is completely dry.

All welding seams are grooved with a Grooving machine or a Seam grooving tool with a hardmetal blade. Weld with a Hot air gun and Tarkett Speed welding nozzle or any suitable Speed welding nozzle specially designed for welding vinyl floors. Then trim the welding rod with the special Trimming knife. If the raised parts of the embossed pattern are too close to the seam, cut them off at the same time as you trim the welding thread (Seam plane).

CAUTION: welded seams must cool to room temperature before trimming. Start trimming where you began welding. All trimming of welding rod is recommended in two steps: rough and fine trimming. With a Trimming knife rough and fine trimming can be done by turning the knife. When fine trimming welding rod, turn the grooved side up.

• Pipe Works

As far as possible it is best to avoid pipework penetrating the floor by making the necessary arrangements at design stage (grouping vertical outlets into a services conduit or siting them within studwork partitions).

Around pipes by walls, cut the sheet and press it against the pipe to form a collar. In tight or cramped areas between pipes and walls, cut as shown by the dotted line. If a cover is required, do the following: if you make a cover out of floor material, fit it against the pipe with adhesive. Weld the seams together using a repair gun.

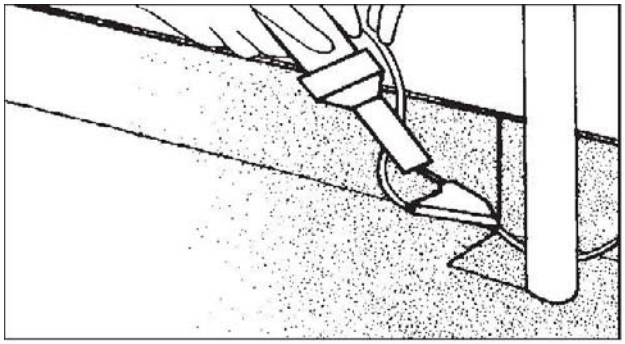

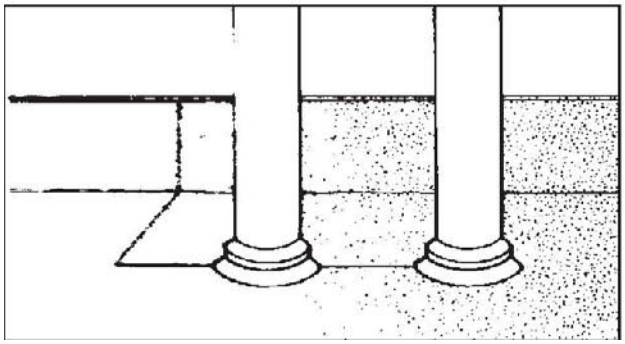

Installing the wall covering

PREPARATION OF THE WALLS

If necessary remove previous coverings. On a block or porous substrate, apply a suitable primer. Do not use paint, even diluted.

• Installing the material

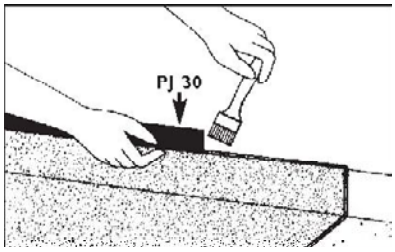

When installing Aquarelle Wallgard or Wallgard 1.3mm in conjunction with Granit Multisafe the JCS PVC Floor/Wall Joiner Strip should be used.

Cut 24 hours before gluing. Minimum ambient temperature: + 15° C.

For a perfect overlapping (levelling compound or Reducer Strip)

Before installing the wallcovering on the floorcovering, the upper edge of the coved floor material should be filled in using a water-resistant levelling compound that you will sand to achieve a smooth juncture.

To compensate for the thickness of the coving, a 2mm Reducer Strip can also be used. Apply the profile by double-gluing using a suitable adhesive.

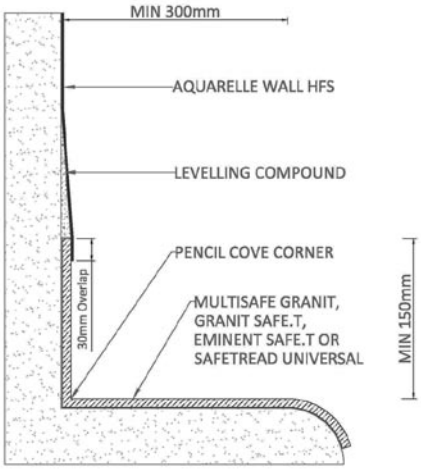

With junction coving and cove former

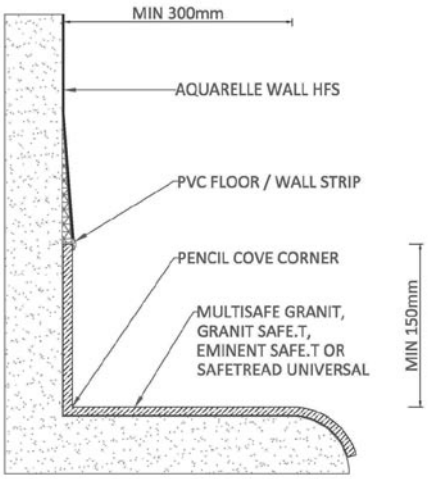

With levelling compound and without cove former

• Caution

The sheets must never be cut in the corners and joints must be located as far away from the wet area as possible and at least 10 cm from a corner. Allow for an overlap of at least 3 cm over the floor coving.

• Vertical installation

The sheets can be installed vertically and hung over the whole height of the room (sheets reversed).

Installing the wallcovering

Horizontal Installation

Aquarelle Wall HFS can also be installed horizontally.

When Wallcladding is not installed to ceiing height, ensure that a capping system is used such as a timber moulding fitted to overlay edge of vinyl, a PVC Capping Strip or Silicone Bead.

• Gluing

Coat the wall over the width of a sheet down to the coved flooring with Uzin KE 2000S acrylic adhesive recommended by Tarkett, using a fine-notched trowel (220 to 250 g/m2) starting from the plumb line previously drawn onto the wall.

Wait for the adhesive to become tacky, then place the first sheet in line with the plumb line. Position very carefully. For the second sheet, coat the substrate with adhesive and hang sheet reversed, either by butting it up tight, edge to edge (Important: first check the condition of the edges), or by overlapping the edges by about 3 cm.

In the overlapping case, to cut the joint, heat with the heat gun and cut with a straight blade or using the Combined scriber (see page 14).

For multipled sheets, continue with this process.

Jacobsen recommend the use of Uzin KE 2000S acrylic adhesive for wall covering installation. **Do not use** solvent based neoprene contact adhesives as these can cause plasticiser migration.

• Corners

Inside corner

To create the corner, use the corner roller, while heating the covering with the heat gun. Where the corner of the substrate is not straight, cut the covering vertically, at least 10 cm from the corner and continue hanging.

Outside corner

Hang by double-gluing using a suitable adhesive 5 cm each side of the corner. In case of a non-vertical corner, cut at 10 cm from the corner and continue hanging.

After installation

• Hot welding the joints

The joint is opened using a Grooving tool (Gouge for wall) supported by a Thick ruler.

Weld from top to bottom using the Speed nozzle.

Trim in two stages using the Trimming knife, pre-trimming using a Trimming guide and finishing with the Trimming knife without the guide.

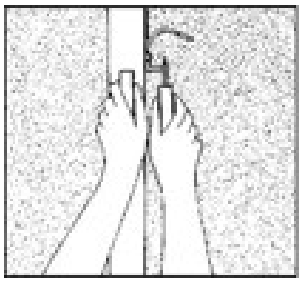
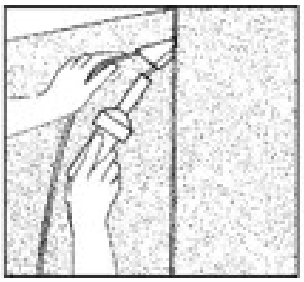
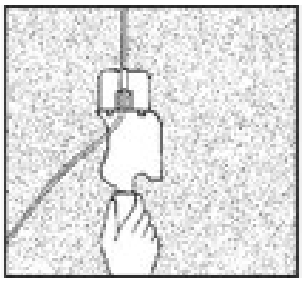
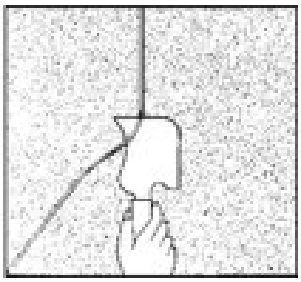

CAULKING

Where floor or wall coverings are perforated, watertight chemical plugs are used or the inside of the plug is filled with a suitable watertight mastic (of the polyurethane or MS polymer type) before fixing accessories and sanitary equipment using screws. In addition, watertight mastic must be applied between the surfaces in contact.

For example: when installing a WC (with a wall-hung bowl for preference), proceed as indicated above and in addition, use watertight mastic under the bowl before installation.

Use a suitable mastic (acrylic, polyurethane or MS polymer type) around door frames, at the base and top of the wall covering and around any fixings installed after the Aquarelle Wall HFS is hung.

CBI 5113

March 2007

GIB Aqualine®
Wet Area Systems

www.gib.co.nz

GIB®

Introduction

MARCH 2007

THIS PUBLICATION

This publication is not intended as the definitive guide on wet area construction and wet area systems, but rather as a helpful guide to best practice around areas where there is intermittent water exposure and splash zones within residential and non-residential buildings – in particular, areas covered by the New Zealand Building Code (NZBC), Clause E3 Internal Moisture.

The information herein is designed to be helpful to designers, contractors and home-owners wishing to achieve a result that is easy to incorporate into modern design, simple and clear to construct, and that will satisfy the needs, requirements and expectations of both the NZBC and the end user.

Wet areas in the home often require relatively frequent and expensive renovation or repair, often because of the ingress of water to the structure of the building.

It is important to introduce materials and systems which have been specially designed to cope with the conditions that are common in wet areas, and to ensure they are installed correctly, using best practice, and are compatible to form a complete wet area system.

The code numbers shown with each "typical detail", e.g. GAW-D030, match the code numbers for drawings available as downloads on the GIB® website at www.gib.co.nz

The reference numbers (e.g. GAW-D030) stand for: GAW D 030

GAW – GIB Aqualine® Wet Area System; D – Detail; 030 – Drawing Number

WHAT IS A WET AREA?

Generally, wet areas are described as spaces to where fresh water is reticulated, such as bathrooms, toilets, laundries and kitchens. Wet areas fall into two categories; these are well explained and documented in the NZBC, Clause E3.

1. Water splash areas – These are areas subject to intermittent splash of liquid water around sanitary fittings and appliances such as baths, vanities, laundry tubs, sinks, etc. These areas are required to have an impervious, easily cleaned surface.
2. Shower enclosures – These are areas subject to more frequent, larger quantities of water, and include shower enclosures and shower over bath areas. The NZBC E3/AS1 requires these areas to be impervious, and specifically excludes any paint and wallpaper finishes. Where ceramic tile or stone finishes are applied, E3/AS1 requires that they "shall be laid on a continuous impervious substrate or membrane".

The requirements of these wet areas are described on page 6 of this publication and in full in Clause E3 of the NZBC. Clause E3 also refers to other requirements not covered in this publication, such as ventilation, condensation control and overflow management, which will require separate consideration. Ongoing maintenance of wet areas is also important to maximise the life of the wet area.

GIB AQUALINE®

Although able to cope with infrequent short-term exposure, standard gypsum plasterboard will have a shortened life expectancy when frequently exposed to water or moisture.

The NZBC does not call for water resistant linings in wet areas but it is highly desirable to incorporate lining materials which will maintain their integrity longer when exposed more frequently to water or steam and particularly to one-off events such as leakages or flooding of a room.

GIB Aqualine® is ideal in such situations because it features a water resistant wax polymer impregnated core.

Unlike other commonly used substrates, the GIB Aqualine® core not only resists penetration of water through the lining into the framing behind, but also resists water "wicking" up the core, a common cause of long-term damage where a water resistant lining has not been used.

GIB Aqualine® will maintain its integrity for extended periods, particularly where wicking over large areas can destroy the integrity of the interface between the lining and paint or wallpaper surfaces or between the lining and the tile adhesive.

The illustrations below graphically show the difference between GIB Aqualine® and standard plasterboard after a two-hour soak test in red dye.

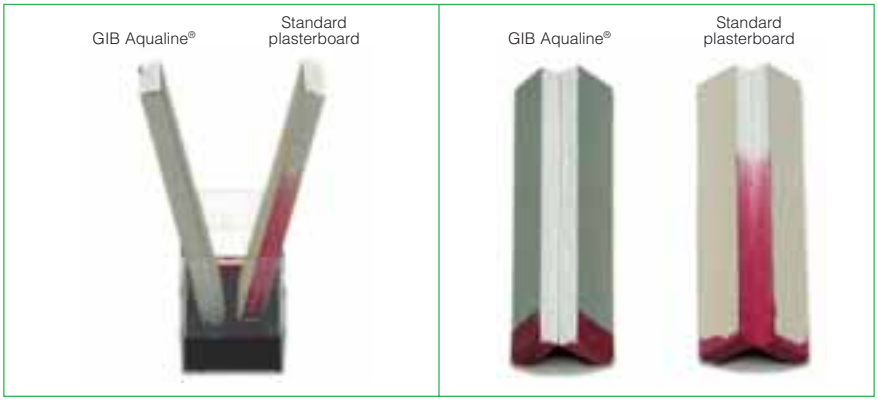

Introduction/Design Considerations

GIB AQUALINE® *continued*

Where to Use GIB Aqualine®

Though not required by NZBC, it is highly desirable to include GIB Aqualine® in all areas at risk of water or moisture damage, in order to prolong the life expectancy of that space.

They include:

	WALLS	CEILINGS
BATHROOMS	✓	✓
SHOWERS	✓	✓
LAUNDRY	✓	✓
KITCHEN	✓	
TOILET	✓	

Benefits

- Water resistant and durable to help protect against water damage
- Proven substrate for paint, wallpaper, tiles, sheet vinyl and rigid sheet shower linings with installations in over 300,000 bathrooms in New Zealand
- Suitable for both residential and non-residential applications
- Dimensionally stable, will not buckle or warp, hence an excellent substrate for ceramic tiles
- Conventional jointing methods
- Easy to cut and form openings
- Contains fibreglass and other additives for strength and fire resistance
- May be used in GIB® Bracing, GIB® Fire Rated and GIB® Noise Control Systems (see Compliance with the NZBC, Clauses B1, C3 and G6). Consult the appropriate GIB® literature for installation details
- Green face paper for ease of recognition.

Sheet Dimensions and Weights

SHEET DIMENSIONS (ALL SHEETS 1200mm WIDE AND TE/TE)		MAXIMUM WEIGHT/m²
Thickness (mm)	**Length (mm)**	
10	2400, 2700, 3000, 3600	7.8kg
13	2400, 2700, 3000, 3600	10.2kg

Handling and Storage

- GIB Aqualine® must be stored under cover, stacked flat and clear of the floor with sufficient support to avoid sagging
- GIB Aqualine® must be handled as a finishing material.

APPRAISAL

The document entitled *GIB Aqualine® Wet Area Systems* 2007 has been appraised by BRANZ, Appraisal Certificate, No. 427 (2007).

COMPLIANCE WITH THE NEW ZEALAND BUILDING CODE (NZBC)

Structure – Clause B1

The design and material specification for steel and timber framing used in GIB Aqualine® systems must be in accordance with the performance requirements of NZBC Clause B1 (Structure). See Bracing in Wet Areas on page 5.

Durability – Clause B2

When installed and maintained in accordance with this literature, GIB Aqualine® tiled or vinyl covered systems have a serviceable life of at least 15 years. They comply with the requirements of NZBC Clause B2 (Durability) for use in wet areas directly exposed to liquid water, e.g. showers, showers over baths and splash-backs.

When used as a general wet area lining and maintained under normal dry internal conditions, GIB Aqualine® systems have a serviceable life of at least 50 years and comply with NZBC Clause B2 (Durability) for use within toilets, kitchens, bathrooms and laundries not directly exposed to liquid water.

Spread of Fire – Clause C3

GIB® Fire Rated Systems provide passive fire protection in accordance with the requirements of NZBC Clause C3 (Spread of Fire). When GIB Aqualine® is substituted into fire rated systems in place of the equivalent thickness GIB Fyreline®, the Fire Resistance Rating (FRR) of that system will be maintained.

Design Considerations

MARCH 2007

COMPLIANCE WITH THE NEW ZEALAND BUILDING CODE (NZBC) *continued*

Internal Moisture – Clause E3
When installed in accordance with this literature, tiled or vinyl covered GIB Aqualine® systems may be used in areas directly exposed to liquid water, such as showers, to provide an impervious and easily cleaned wall surface. These systems comply with the requirements of NZBC Clause E3 (Internal Moisture).

Hazardous Building Materials – Clause F2
At no stage during handling, installation, or serviceable life does GIB Aqualine® constitute a health hazard. It therefore meets the provisions of NZBC Clause F2 (Hazardous Building Materials). Dust resulting from the sanding of stopping compounds may be a respiratory irritant and the use of a suitable facemask is recommended.

Ventilation – Clause G4
NZBC Clause G4 (Ventilation) requires buildings to have a means of collecting or otherwise removing steam generated from laundering, utensil washing, bathing or showering. To prolong the life of interior linings and surface finishes and to minimise the risk of moisture related problems such as condensation and mould growth, adequate heating and mechanical ventilation must be provided in kitchens, bathrooms and laundries.

Airborne and Impact Sound – Clause G6
GIB® Noise Control Systems can be used to provide ratings for Sound Transmission Class (STC) and Impact Insulation Class (IIC) in accordance with the requirements of NZBC Clause G6 (Airborne and Impact Sound). When GIB Aqualine® is substituted into GIB® Noise Control systems in place of the equivalent thickness GIB® Standard plasterboard or GIB Fyreline®, the STC and IIC rating of that system will be maintained. When GIB Aqualine® is substituted in place of the equivalent thickness GIB Noiseline®, a small performance loss may occur. For further information contact the GIB® Helpline 0800 100 442.

LIMITATIONS

- GIB Aqualine® must not be used for bracing purposes in shower cubicles or above baths (see Bracing in Wet Areas below)
- Do not use GIB Aqualine® where it may be exposed for extended periods to humidities of 90% RH and above. Such areas include group shower or steam rooms as well as moisture and chlorine rich environments such as indoor swimming pools
- GIB Aqualine® must not be directly applied to solid plaster (gypsum or cement), wood based sheet linings or similar materials, masonry or concrete. GIB Aqualine® may only be applied to these materials where timber strapping or steel furring channels are installed
- GIB Aqualine® must not be installed over a vapour barrier or a wall acting as a vapour barrier
- Cracked or damaged sheets must never be used
- GIB Aqualine® must not be used in external applications
- GIB® plasterboard must not be exposed to temperatures in excess of 52°C for prolonged periods. Heat-generating devices may include halogen lighting, cooking elements, radiant heating, solid fuel exhausts and fire surrounds. Consult the appliance manufacturer for installation details.

BRACING IN WET AREAS

Bracing elements are required to have a durability of 50 years. GIB® bracing elements are not to be located in shower cubicles or behind baths because of durability requirements, the likelihood of renovation, and practical issues associated with fixing bracing elements to perimeter framing members.
Otherwise, GIB® Bracing Systems can be used in water-splash areas as defined by NZBC Clause E3/AS1, provided these are maintained impervious for the life of the building.
GIB Aqualine® can be used in place of GIB® Standard plasterboard in GIB® bracing elements. GIB Aqualine® can be used in place of GIB Braceline® in GIB® bracing elements 900mm or longer, provided the perimeter of the element is fixed with GIB Braceline® Nails or GIB Braceline® screws at 100mm centres, using the GIB Braceline® corner fixing pattern.

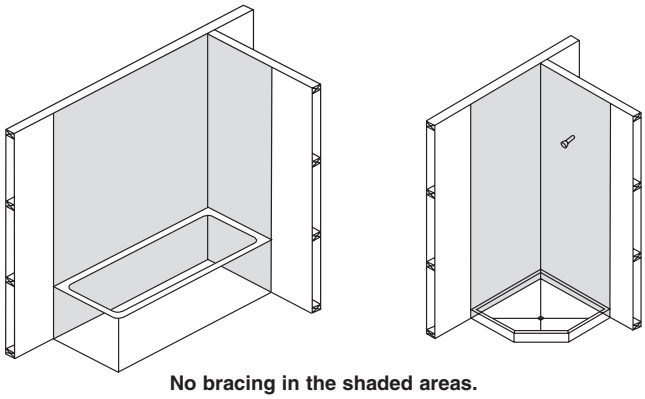

No bracing in the shaded areas.

Design Considerations

MARCH 2007

NEW ZEALAND BUILDING CODE

E3.3.4 requires impervious and easily cleaned surfaces to all surfaces adjacent to sanitary fixtures or laundering facilities.

E3.3.5 requires that surfaces of building elements likely to be splashed or contaminated in the course of the intended use of the building must also be impervious and easily cleaned.

E3.3.6 requires that surfaces of building elements likely to be splashed must be constructed in a way that prevents water from penetrating behind linings or into concealed spaces (e.g. wall cavities).

Walls in wet areas therefore need to be addressed according to whether they fall within the scope of one of the following descriptions:

1. Wall surface likely to be splashed
2. Shower walls. Although not a requirement of NZBC it is highly recommended that the wall surfaces within 150mm of the top edge of a bath, and the vertical faces immediately under the edge of a bath, are treated in the same way as for a shower wall.

WALL SURFACES IN AREAS LIKELY TO BE SPLASHED

Suitable linings include:

a. Integrally waterproof sheet material (e.g. polyvinylchloride) with sealed joints
b. Ceramic or stone tiles having 6% maximum water absorption, waterproof grouted joints, and bedded with an adhesive specified by the tile manufacturer as being suitable for the tiles, substrate material and the environment of use
c. Cement based solid plaster or concrete having a steel trowel or polished finish (semi-gloss or gloss paint must be used if a paint finish is required)
d. Cork tile or sheet sealed with waterproof applied coatings
e. Monolithic applied coatings having a polished, non-absorbent finish (e.g. terrazzo)
f. Sheet linings finished with vinyl coated wallpaper, or semi-gloss or gloss coating
g. Water resistant sheet linings finished with decorative high pressure laminate or factory applied polyurethane or resin
h. Modular or multiple lining units which are themselves *impervious* and easily cleaned, and are installed with *impervious* joints
i. Timber or timber-based products such as particleboard sealed with waterproof applied coatings.

NB: Floor surfaces and floor/wall junctions are required by E3 to be impervious.

SURFACES IN SHOWERS AND AROUND BATHS

Suitable linings include all of the above, but **NOT including items (d) and (f) from the above list.**
Note that a waterproof membrane complying with AS/NZS 4858: 2004 **MUST** be applied to all lining materials used under ceramic tiles in these areas.
The waterproof membrane must extend to a 1500mm horizontal radius from a shower rose unless the shower is contained within a fixed enclosure. A shower curtain does not constitute a fixed enclosure.
Particleboard manufacturers recommend that in wet areas, panels should be protected with a suitable wet area membrane or an integrally waterproof sheet material. Some local authorities call for this treatment on all timber based floors. Local requirements should be checked before proceeding.
Dark grey shaded areas in the diagrams below represent the minimum extent of wall surfaces requiring impervious sheet materials or waterproof membranes prior to tiling. Light grey shaded areas represent good practice.

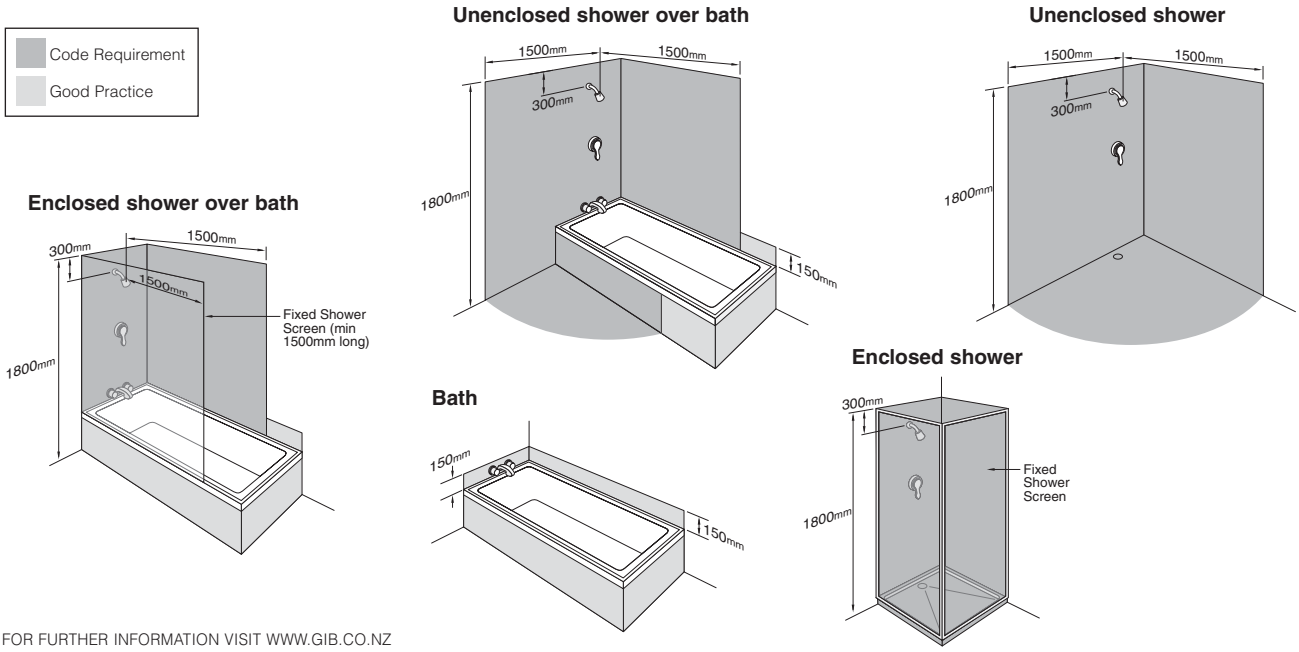

Design Considerations

MARCH 2007

WALL SURFACES SURROUNDING COOKTOPS

The protection of combustible surfaces surrounding gas cooking appliances is covered by NZS 5261. Consult the current version of this standard to ensure compliance.

However, as a guide the following options are acceptable for wall surfaces within 200mm of the periphery of a gas element to a height of 150mm above the element for the full dimension (width and depth) of the cooktop surface area:

- 5mm ceramic tiles on GIB® plasterboard
- 5mm toughened glass on GIB® plasterboard
- or any system that can be demonstrated to meet the requirements of Clause 2.6.2.6 of NZS5261.

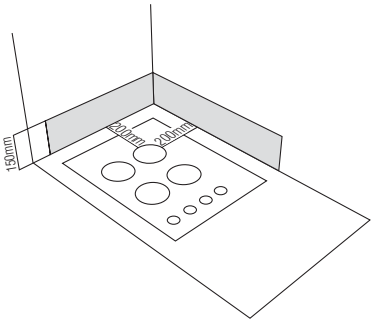

Because of the moisture generated by cooking, it is highly recommended that GIB Aqualine® is used in kitchen areas.

GIB® plasterboard products must not be exposed to temperatures in excess of 52°C for sustained periods. Check with the appliance manufacturer that this requirement will be met. However, it would be unusual for surfaces outside 200mm to exceed 52°C for sustained periods.

PENETRATIONS AND SEALANTS

As leaks and water ingress typically occur at junctions between building elements and at penetrations, it is essential that particular attention is given to these details at the time of installation. Lack of attention to detail can result in water damage that could remain undetected for a long time.

- Ensure that all cut-outs for pipe penetrations are made neatly, and slightly oversize, with a hole saw. These penetrations should be of a diameter no more than 12mm greater than that of the pipe
- Sealants should be of a mould inhibiting type and be neutral cure. Neutral cure silicones will generally meet these requirements
- Surfaces should be dry and free from dust before application, a minimum of a 4mm joint width provided and the depth should not exceed the width
- Gun a bead of silicone sealant to the full depth of the GIB Aqualine® in the following locations:
  - Around all tap/pipe bodies
  - The gap between the bath rim and the bottom edge of the GIB Aqualine®
  - Between the upstand of preformed shower bases and the bottom edge of the lining
  - Where an impervious junction is required at the floor/wall line, carefully seal the gap between the bottom edge of the board and the finished floor. Leave a 5-10mm gap at the bottom of the GIB Aqualine® wall lining for this purpose, ensuring the gap is free from dirt and dust
- Do not locate shower heads or taps on fire rated or intertenancy walls. Should this be unavoidable then refer to the publication *Penetrations in GIB® Fire Rated Systems*. Always use tested and approved proprietary solutions.

WATERPROOF MEMBRANES

- A waterproof membrane must be applied to **all** lining materials used as a substrate for ceramic tiles in a shower or shower over bath situation
- The wall surface in a shower or shower over bath situation is not complete and ready for tiling until coated with a waterproof membrane over the lining and the jointed areas shown shaded on page 6
- Only in-situ waterproofing materials which are manufactured to AS/NZS 4858:2004 “Wet Area Membranes” are recommended and applied to manufacturer’s recommendations. Typically, these types of membranes are not suitable for paint and wallpaper finishes
- Waterproof membranes must be fully cured and dry prior to application of tiling adhesives
- Embed reinforcing mats in the membrane at all internal corners of the shower (including floor/wall junctions)
- Preformed sheet membranes are also available and may be more suitable where curing times or specialist skills are an issue
- The details shown in this technical literature are generic in nature. For accurate detailing, follow the specifications provided by the supplier of the proprietary waterproof membrane.

TILING

GIB Aqualine® is suitable as a substrate for tiling up to the following weights:

- 10mm GIB Aqualine® up to 20kg/m^2
- 13mm GIB Aqualine® up to 32kg/m^2.

Note: Most ceramic and porcelain tiles weigh less than 20kg/m^2.

For further information on tiling consult the BRANZ *Good Practice Guide – Tiling*.

Design Considerations

MARCH 2007

FLEXIBLE SHEET VINYL – SHOWERS AND OTHER WET AREAS

- GIB Aqualine® is a suitable substrate for flexible vinyl wall finishes in wet areas of residential, commercial or institutional buildings
- Framing requirements and installation procedures for the GIB Aqualine® substrate shall be as per page 10 or 11, except that the lining gap at the floor should be reduced to 5mm when a pencil cove detail is used
- The installation of galvanised steel reinforcing angles (32 x 32 x 0.55mm) behind internal GIB Aqualine® corners is recommended for sheet vinyl applications in showers or shower over bath situations (see illustration page 14)
- The GIB Aqualine® lining must be jointed and stopped to a paint quality finish (Level 4) – trowel marks can telegraph through even a commercial grade 2mm vinyl
- A commercial grade vinyl is recommended for the wall finish in commercial or institutional bathrooms and showers
- In areas directly exposed to liquid water, all joints in flexible sheet vinyl must be heat welded
- Installation of the flexible vinyl must be carried out strictly in accordance with the specifications provided by the suppliers/ manufacturers of the vinyl.

RIGID SHEET SHOWER LININGS

- The manufacturers/suppliers of thin (usually 2-3mm) and rigid acrylic shower linings commonly recommend direct adhesive fixing to wall linings using solvent-based adhesives
- Water temperature changes will cause movement of the thin acrylic sheet, which in turn will stress the adhesive and wall lining substrate
- **Do not preseal or paint** areas which are to be covered by the rigid shower linings
- The wall surface must be free of dust before installation of the lining
- Suppliers of rigid sheet acrylic shower linings recommend a minimum of 24 hours for the adhesive to cure fully prior to the shower being put into service
- Care must be taken to ensure that rooms are adequately ventilated and the adhesive is fully cured before the shower is used
- Consult the manufacturer/supplier of the shower lining for full installation details.

RENOVATIONS

Bathrooms, kitchens and laundries are the most renovated rooms in the house, partly due to fashion considerations and partly because of damage sustained by ingress of water and moisture within those spaces.
In most cases when renovating these rooms it is often easier and more cost-effective to remove the existing linings and replace them with GIB Aqualine®. This allows for a completely new start in the room and offers sound substrates for new surfaces such as tiling and painting, where otherwise flaking paint or damaged plasterboard may compromise good and sound finish or practice.
At the very least re-lining will:

- Allow for inspection of framing where damage may have occurred and provide the opportunity to repair such damage
- Allow plumbing and electrics to be checked and altered or replaced where required
- Provide the opportunity to install thermal and acoustic insulation and water resistant linings where appropriate
- Make the job easier.

MAINTENANCE

Lack of maintenance is frequently the cause of premature and often very expensive failure of components and building elements within wet areas.
It is important to regularly inspect and repair any potential problem before it becomes a major problem and expensive to reinstate.
Good maintenance should include:

- Ongoing ventilation. At the very least, good passive ventilation (e.g. window vents); but good active ventilation (e.g. extraction fans) of an appropriate size for the room is recommended
- Impervious coatings and surfaces should be checked for wear and damage and maintained and recoated before ingress of water to the substrate occurs
- Regular cleaning with appropriate cleaners so that build-up of matter, such as mould, is well controlled
- Sealants at junctions and penetrations should be checked for adhesion on a regular basis and replaced where adhesion failure to substrates occurs
- Where pipe leaks have become evident, however small, they should be repaired promptly and any area around such leaks dried out completely before any other repairs are carried out.

Non-residential and Apartments

MARCH 2007

High-rise and commercial wet areas can generally be divided into four separate categories:

HIGH-RISE APARTMENTS AND INTERTENANCY

Wet areas in apartment complexes are generally covered by Clause E3 of the NZBC and will have the same requirements as shown for residential applications. However, apartment buildings will also involve intertenancy walls requiring noise control and fire resistance.

Generally, noise control and fire resistance are the first consideration and then the water resistance is added to those systems.

For noise control, GIB Aqualine® can substitute for the equivalent thickness GIB® Standard plasterboard or GIB Fyreline®.

For fire resistance, GIB Aqualine® can substitute for GIB Fyreline® of equivalent thickness.

In all cases the prescribed noise control or fire resistance system specifications must be followed completely as presented in the GIB® publications *GIB® Noise Control Systems* and *GIB® Fire Rated Systems*.

Refer to typical details on page 25.

The NZBC for intertenancy calls for special consideration to be given to preventing water from travelling from one tenancy to another. This calls for a waterproof membrane to all wet area floors with upstands to walls and the inclusion of floor wastes.

It is important to avoid penetrations such as taps, shower roses, etc. in intertenancy walls as this will compromise fire and noise ratings.

OFFICE, WORKPLACE AND SCHOOLS

These wet areas are generally no different in requirements to those shown in this publication or those of high-rise apartments, and are treated in the same manner.

As there is often a higher impact requirement in commercial applications, 13mm GIB Aqualine® is the minimum thickness recommended.

These areas are often finished in sheet vinyl or ceramic tiles and GIB Aqualine® is an ideal substrate, particularly in the case of sheet vinyl where a high quality finish is required to minimise telegraphing of imperfections in the substrate.

HEALTHCARE AND HOSPITALS

This industry will generally have special requirements for wet areas. GIB Aqualine® will generally satisfy specific design needs in healthcare facilities and in particular is an ideal substrate for the preferred finish of sheet vinyl.

PUBLIC AMENITIES AND SPORTS CLUBS

Public amenities and sports clubs often have a high demand for impact resistance, therefore 13mm GIB Aqualine® should be used, and suitable impact resistant wall coverings considered, such as heavy duty sheet vinyl or ceramic tiles over waterproof membrane to 1200mm high.

Also full consideration should be given to the usage of the amenity and whether high pressure or chemical cleaners will be used or if the amenity may be subject to vandalism.

Because of extreme humidity and presence of chemicals, GIB Aqualine® is not suitable for enclosed swimming pool areas.

Contact the GIB® Helpline on 0800 100 442 for further assistance.

Non-tiled Walls – Timber Framing

MARCH 2007

If bracing, noise control or fire rating considerations exist, consult the relevant GIB® technical publication, e.g. *GIB® Fire Rated Systems, GIB® Noise Control Systems, GIB® Bracing Systems*, for the appropriate information.

Wall Framing

Framing dimensions must comply with the requirements of NZS 3604:1999.

- The moisture content of timber framing shall be 18% or less at the time of lining
- Studs shall be spaced at 600mm centres maximum for both 10mm and 13mm GIB® plasterboard
- Nogs to be evenly spaced with a maximum spacing of 1350mm. Alternatively, nogs may be staggered 150mm maximum either side of a horizontal joint line
- Nogs are not required behind horizontal joints except in shower situations or specific fire or noise control systems.

Fasteners

- 10mm GIB Aqualine® – minimum 25mm x 6g GIB® Grabber® High Thread Drywall Screws or 30mm x 2.8mm GIB® Nails
- 13mm GIB Aqualine® – minimum 32mm x 6g GIB® Grabber® High Thread Drywall Screws or 30mm x 2.8mm GIB® Nails.

Fastener Centres

- 300mm centres to top and bottom plates and to perimeter studs
- Single fasteners to each stud where the horizontal joint crosses the studs
- Place fasteners 12mm from sheet edges
- Daubs of GIBFix® adhesive at 300mm centres to intermediate studs
- Do not place adhesive at sheet edges or under fasteners. Sheet edges at door or window openings can be adhesive fixed unless forming part of the perimeter of a bracing element.

Lining

- Install the sheets leaving a 5-10mm gap at the floor line to allow for movement of the framing members and to allow for cleaning dirt and rubbish before sealing
- Sheets to be touch fitted.

Jointing

- Jointing shall be carried out in accordance with the instructions in the *GIB® Site Guide*; GIB® AquaMix is recommended for the first two coats.

Fastening the Linings – Horizontal Fixing Only

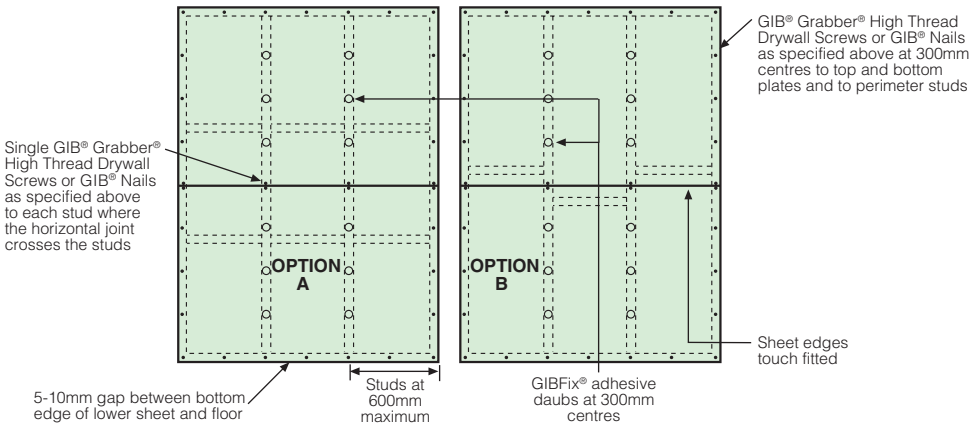

Fastening the Linings – Vertical Fixing Only

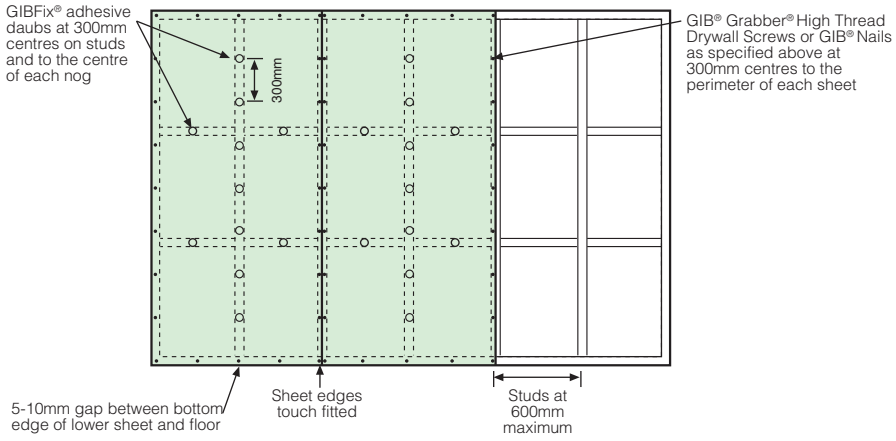

Non-tiled Walls – Steel Framing

MARCH 2007

The minimum sheet thickness for fixing on light gauge steel framing is 13mm GIB® plasterboard.
Steel framing for residential construction is by specific design.
If noise control or fire rating considerations exist, consult the relevant GIB® technical publication (e.g. *GIB® Fire Rated Systems or GIB® Noise Control Systems)* for the appropriate information.

Wall Framing

- Steel stud dimensions to be minimum 63 x 34 x 0.55mm nominal with a 6mm return
- Steel channel dimensions to be minimum 63 x 30 x 0.55mm nominal
- Studs shall be spaced at 600mm centres maximum
- Ensure that the studs are placed with the open side facing in the same direction (see *GIB® Site Guide*).

Fasteners

- 25mm x 6g GIB® Grabber® Self Tapping Drywall Screws.

Fastener Centres

- 300mm centres to top and bottom channels and to end studs
- Single screws to each stud where the horizontal joint crosses the studs
- Place fasteners 12mm from sheet edges
- Daubs of GIBFix® All-Bond adhesive OR screws at 300mm centres to intermediate studs
- Do not place adhesive at sheet edges or under fasteners. Sheet edges at door or window openings can be adhesive fixed.

Lining

- Lay the sheets, leaving a 5-10mm gap at the floor line.
  Note: If friction fitted steel studs have been used, sheets must be fitted hard to the floor. Ensure floor is cured and dry
- Sheets to be touch fitted.

Jointing

- Jointing shall be carried out in accordance with the instructions in the *GIB® Site Guide*. GIB® AquaMix is recommended for the first two coats.

Fastening and Jointing the Linings – Horizontal Fixing

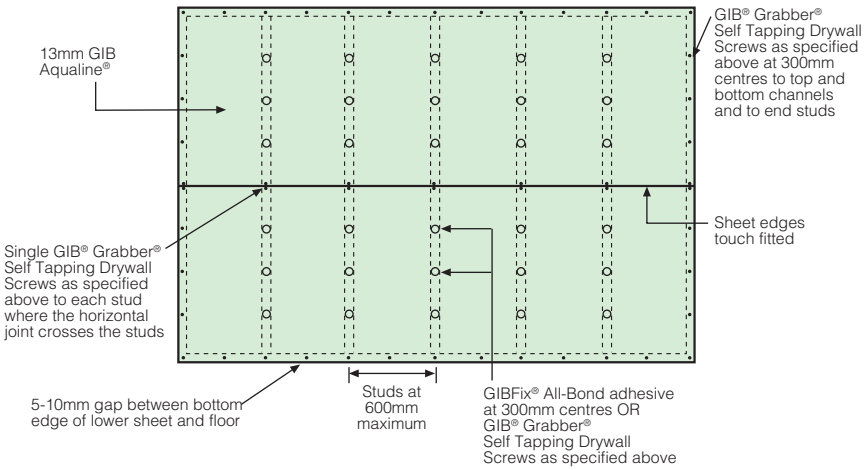

Fastening and Jointing the Linings – Vertical Fixing

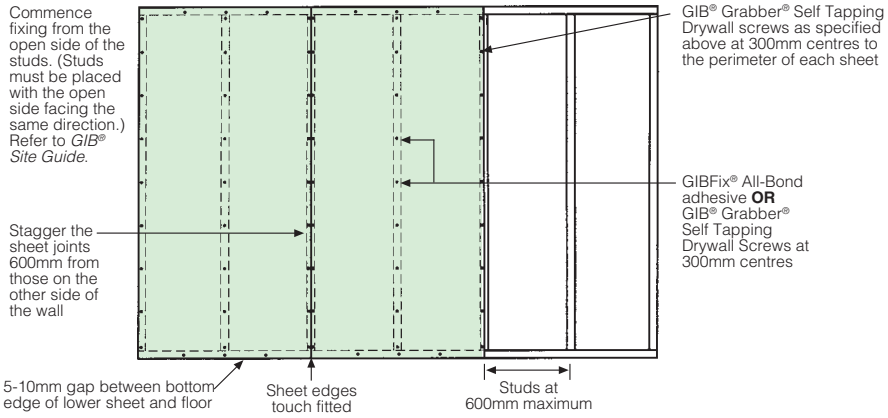

Tiled Walls

MARCH 2007

Important: See page 6 and 7 for waterproof membrane requirements.

Wall Framing

Framing dimensions and spacing must comply with the requirements of NZS 3604:1999 or relevant NZ Standard.

- Prior to lining in tiled areas (shower cubicles and shower over bath only) the internal corners shall be reinforced with a minimum 32 x 32 x 0.55mm galvanised metal angle. Each side of the angle shall be fastened to the framing with 30mm galvanised clouts at 300mm centres
- Steel stud systems do not generally require nogs except as below:
  - Adjacent to each pipe penetration and behind sink and tub flashings
  - Between all studs above bath flanges and preformed shower bases
- For impact protection in shower cubicles or shower over bath situations it is important that all sheet joints are made on solid framing. This may require either vertical fixing of the GIB Aqualine® or the installation of some additional nogs.

Fasteners

- For 10mm GIB Aqualine® use minimum 25mm x 6g GIB® Grabber® Drywall Screws
- For 13mm GIB Aqualine® use minimum 32mm x 6g GIB® Grabber® Drywall Screws.

Fastener Centres

- GIB® Grabber® Drywall Screws at 100mm centres to perimeter of wall and to all intermediate studs
- Adhesive is not to be used in place of mechanical fastenings.

Lining

- 10mm or 13mm GIB Aqualine® is suitable for use on timber framing and for tile weights up to 20kg/m²
- 13mm GIB Aqualine® must be used for tile weights between 20 and 32kg/m² and when light steel framing has been used
- GIB Aqualine® may be fixed vertically or horizontally
- Provide a 5-10mm gap at the wall/floor junction
- Provide a 5-10mm gap between the bottom edge of the GIB Aqualine® and any bath rim or preformed shower base to allow for placement of sealant
- GIB Aqualine® sheets shall be touch fitted
- Where the framing or fastener centres required for tiled areas are closer than those specified for GIB® Fire Rated and GIB® Noise Control Systems, the tiling specification shall prevail. Where relevant, check that fastener lengths comply with the requirements of GIB® Fire Rated Systems or GIB® Noise Control Systems.

Jointing

- Jointing shall be carried out in accordance with instructions in the *GIB® Site Guide*
- Water resistant GIB® AquaMix is recommended for the first two coats
- No top coat is required.

Fastening the Linings – Horizontal Fixing in Tiled Areas

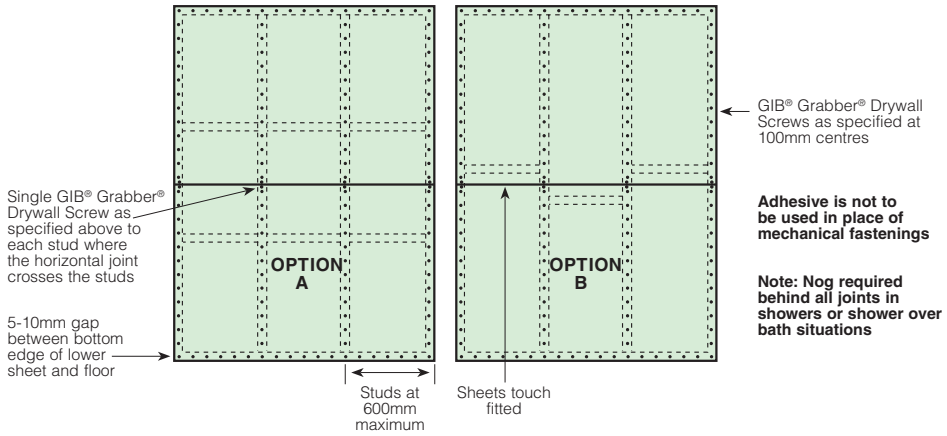

Note:

GIB Aqualine® is suitable for tiling to full height of walls, but if a wall is to be partially tiled (i.e. half high), only the area of wall under the tiles needs to be fixed as above. The remainder of the wall may be fixed as for non-tiled area (see page 10 & 11).

Ceilings

MARCH 2007

Ceiling Framing

Framing dimensions and spacing must comply with the requirements of NZS 3604:1999 or relevant NZ Standard.
If bracing, noise control, fire rating considerations exist consult the relevant GIB® publication for appropriate information.

Fasteners

- Steel battens – 25mm x 6g GIB® Grabber® Self Tapping Drywall screws
- Timber battens or Joists – 32mm x 6g GIB® Grabber High Thread Drywall screws.

Adhesives

- Steel battens – GIBFix® All-Bond
- Timber battens – GIBFix® Wood Bond (not suitable for LOSP treated timber).

Fasteners Centres

- Single screws to the edges and centre of the sheets across each batten
- Screws to be 12mm from sheet edges
- Daubs of adhesive at 200mm centres between the screws
- Do not place adhesive at sheet edges or under fasteners, this may lead to screw or nail pops.

Lining

- The lining shall be fixed at right angles to the battens or joists
- Commence fixing from the centre of the sheets outwards
- Sheets to be touch fitted
- Use long length sheets to minimise sheet end butt joints
- Back-block sheet end butt joints
- See GIB® Site Guide for sheet edge backblocking requirements.

Batten Spacings

- 13mm GIB Aqualine® plasterboard – 600mm centres max
- 10mm GIB Aqualine® plasterboard – 450mm centres max.

Jointing

- All sheet joints must be paper tape reinforced and stopped in accordance with instructions in the *GIB® Site Guide*. Water resistant GIB® AquaMix is recommended for the first two coats.
- Do not fix tiles to GIB® plasterboard ceilings.

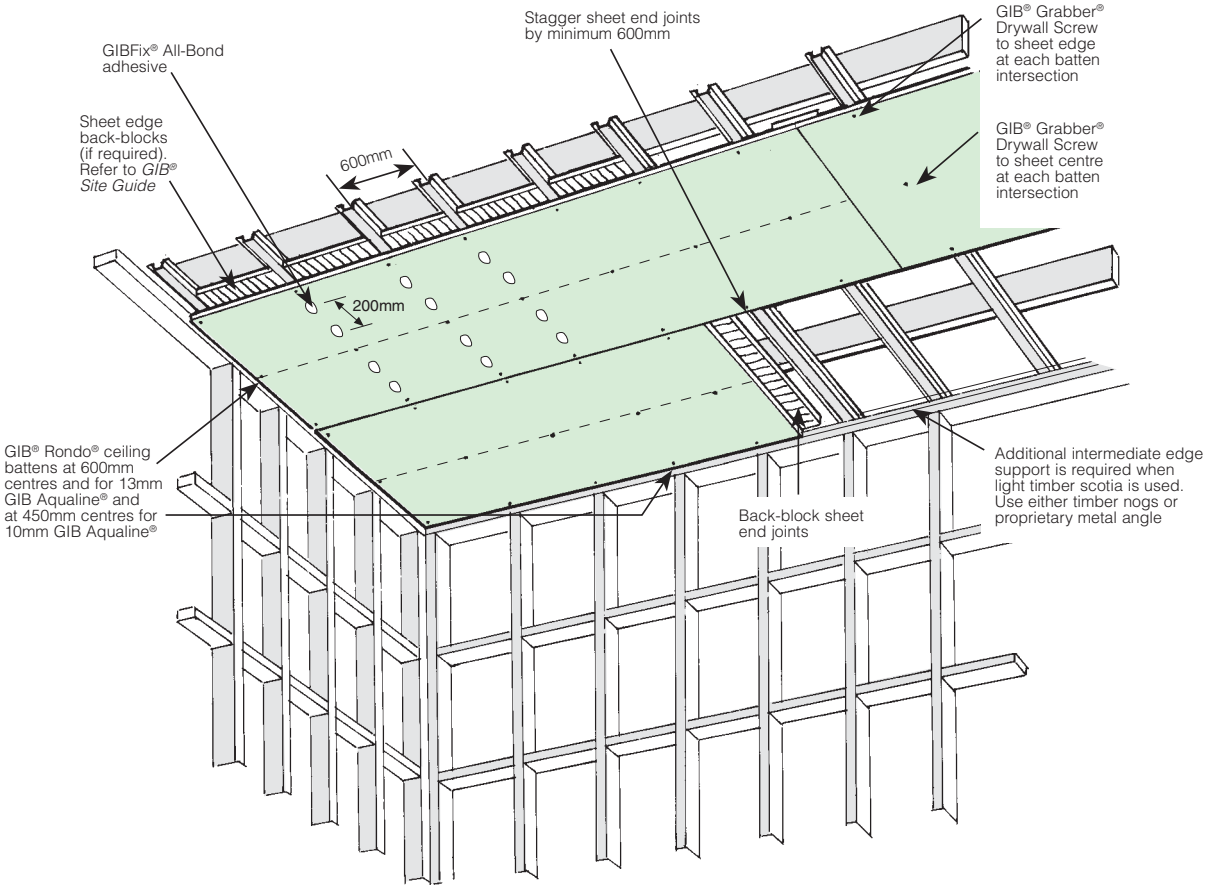

Shower Over Bath – Tiled Walls

MARCH 2007

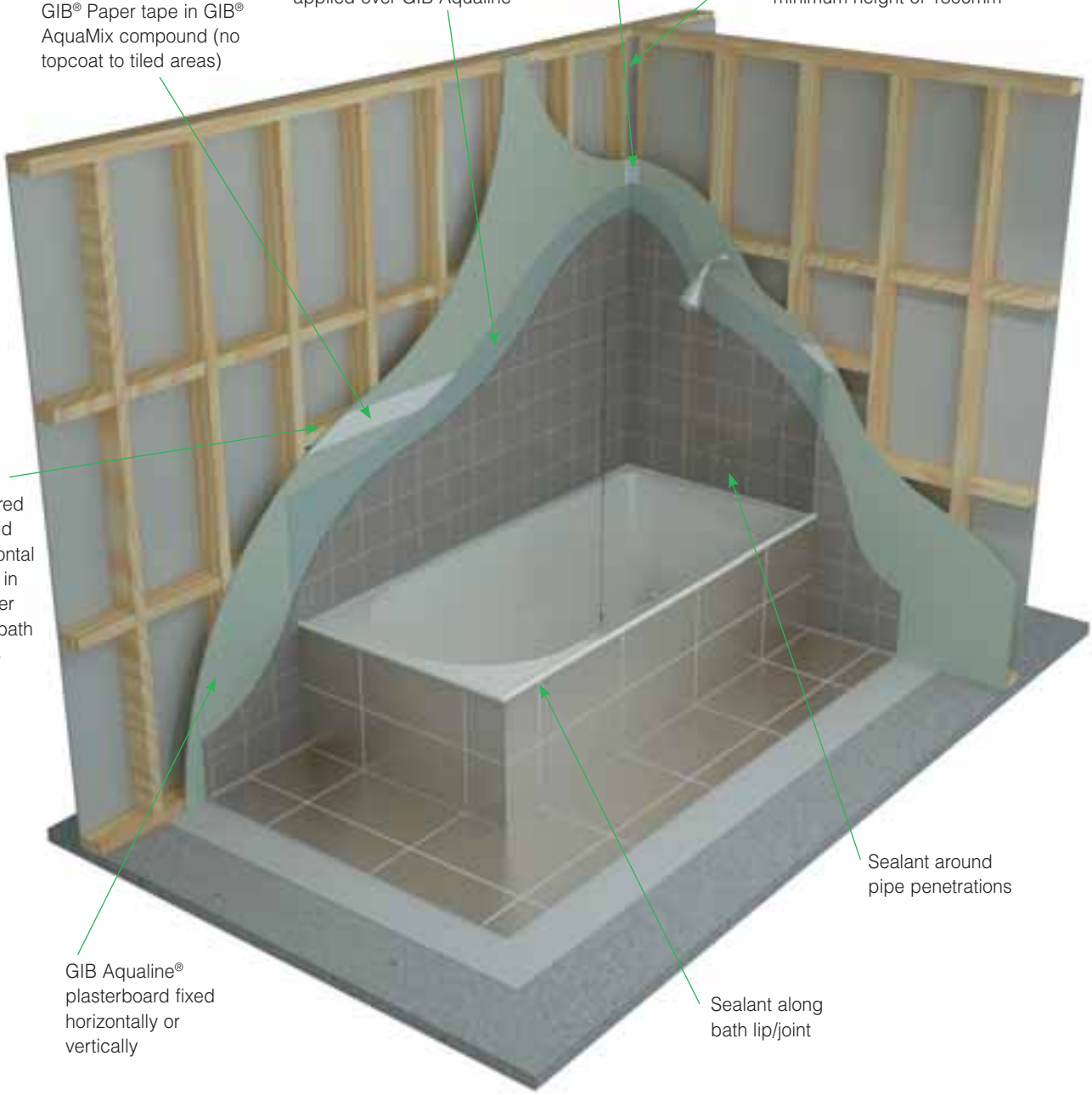

Run a bead of silicone sealant around the mixer unit on the tiles extending below the bottom of the pipe aperture.

For typical details, see the following pages.

Shower Over Bath – Tiled Walls

MARCH 2007

A GAW-D001

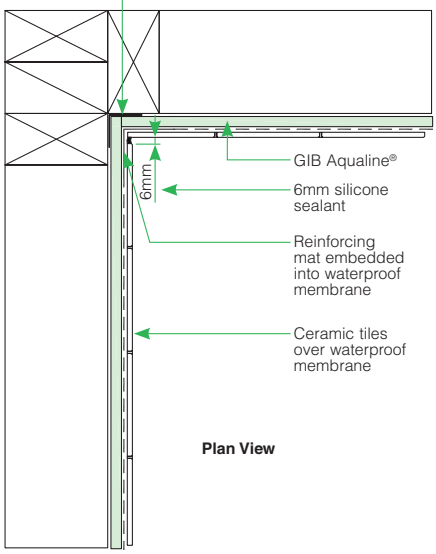

B GAW-D002

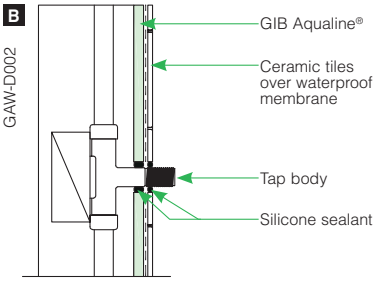

Note:
Where impact noise from pipes is an issue, fix all pipes on resilient brackets.

D GAW-D004

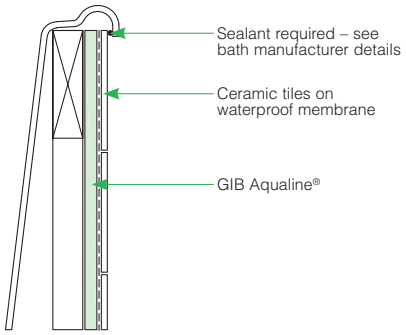

C GAW-D003

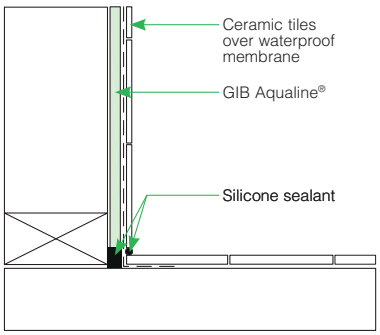

E GAW-D005

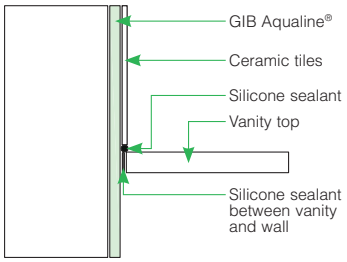

F GAW-D006

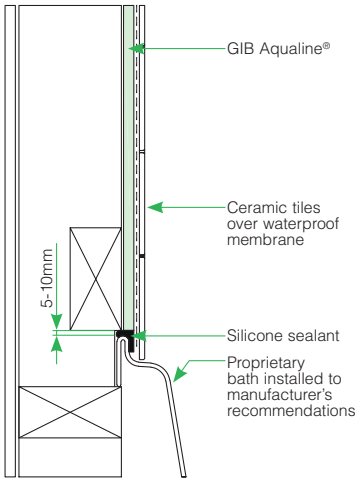

Shower Over Bath – Acrylic Liner

MARCH 2007

A GAW-D007

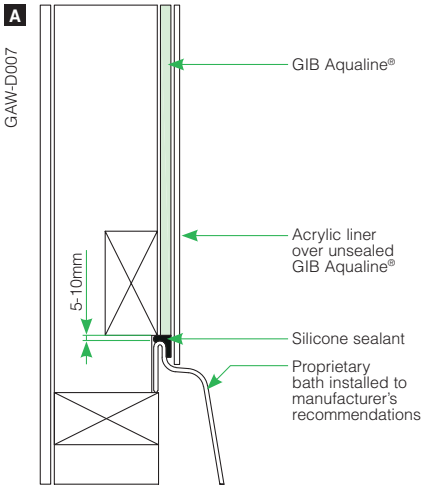

B GAW-D008

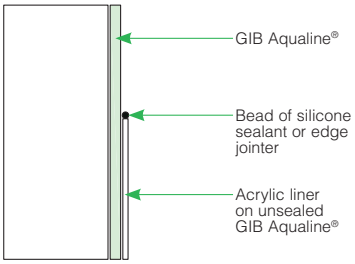

C GAW-D009

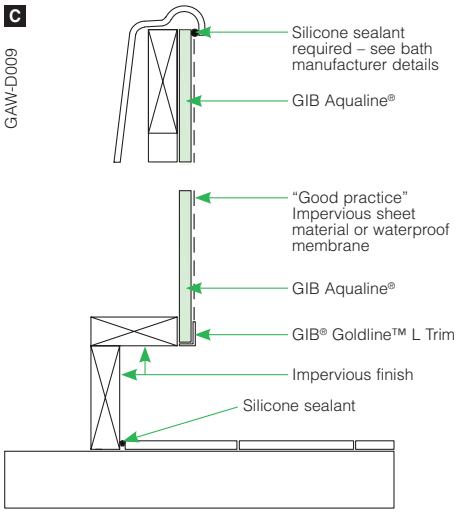

D GAW-D010

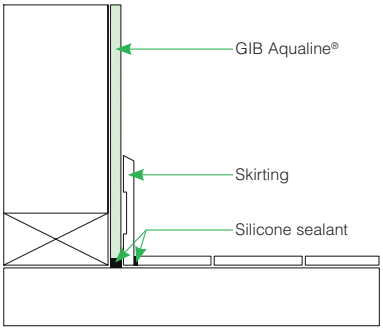

E GAW-D011

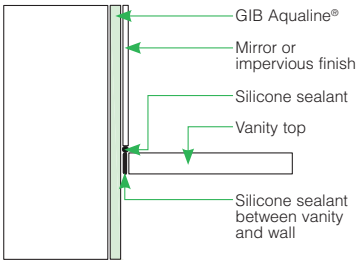

F GAW-D012

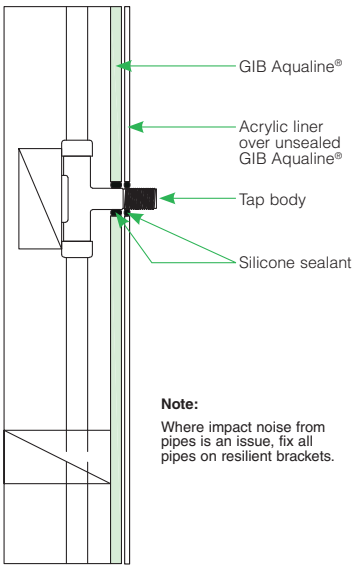

Note:
Where impact noise from pipes is an issue, fix all pipes on resilient brackets.

GIB AQUALINE® WET AREA SYSTEMS – TYPICAL DETAILS

Bath – Tiled Upstand

MARCH 2007

A

GAW-D013

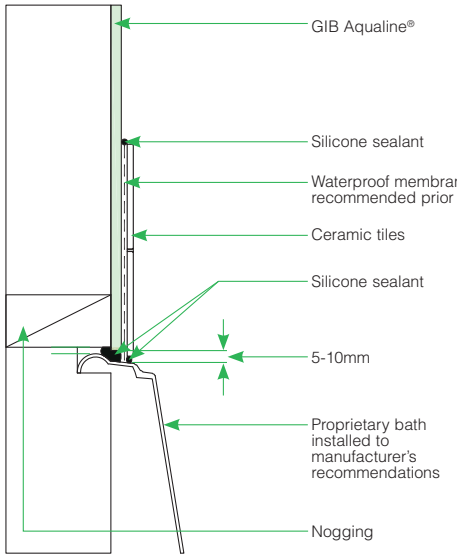

B

GAW-D014

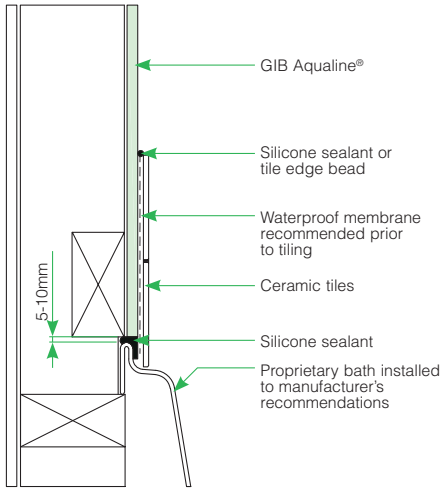

C

GAW-D015

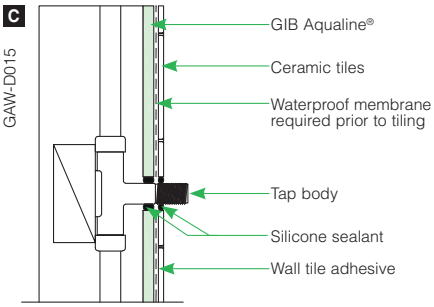

Note:
Where impact noise from pipes is an issue, fix all pipes on resilient brackets.

D

GAW-D016

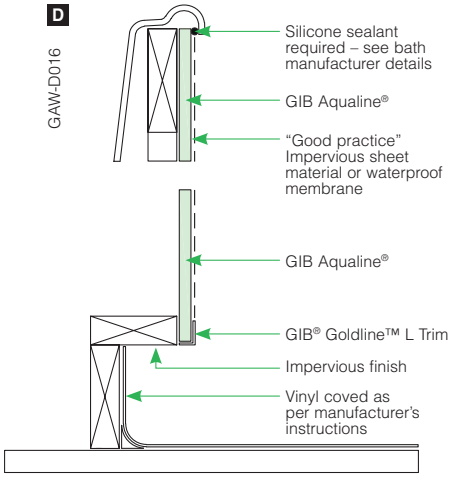

E

GAW-D017

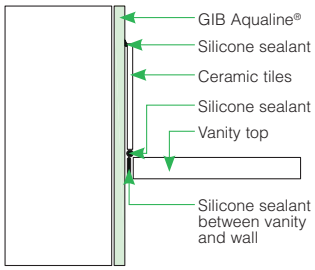

Shower – Tiled Walls and Base

MARCH 2007

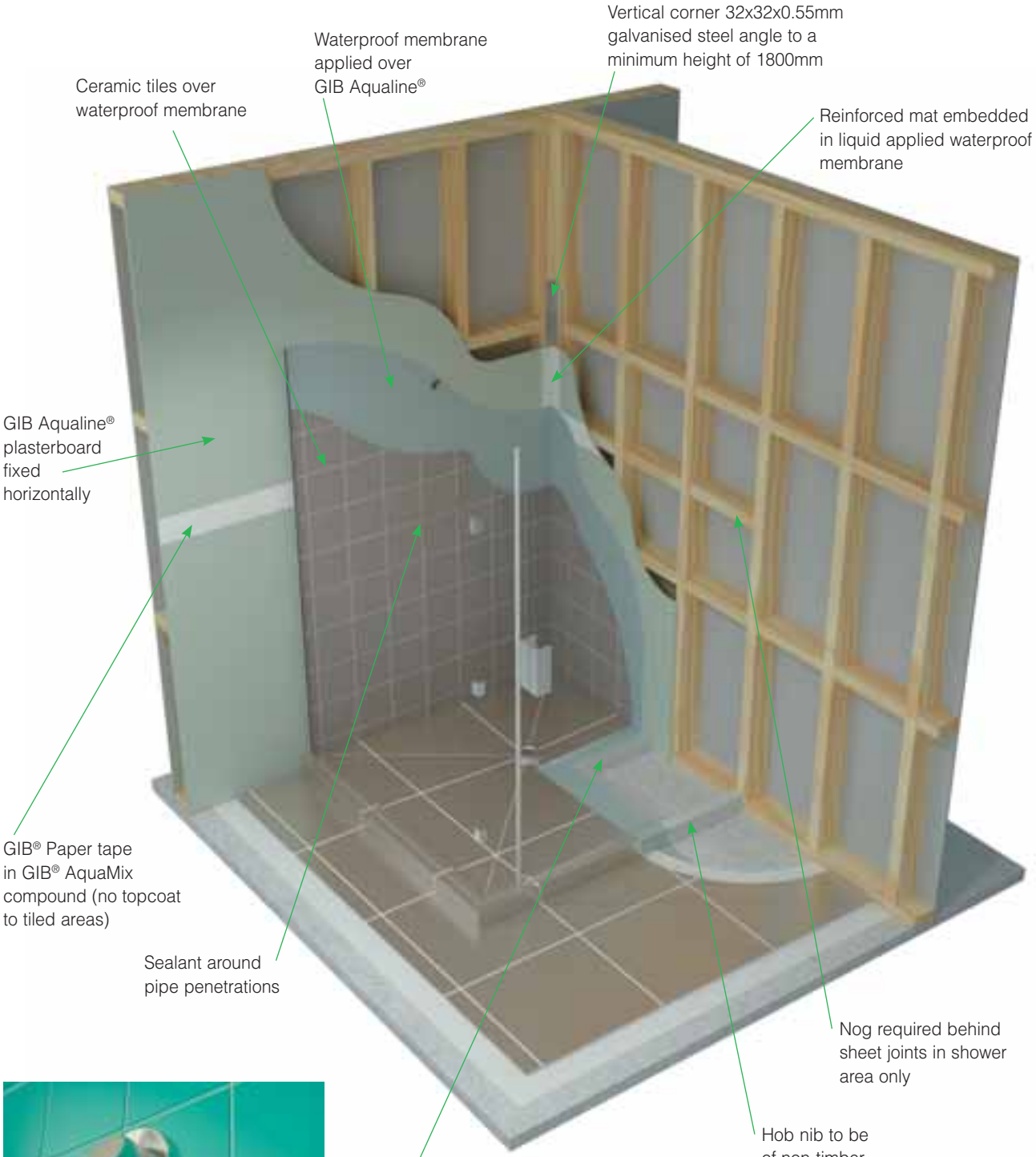

Run a bead of silicone sealant around the mixer unit on the tiles extending below the bottom of the pipe aperture.

For typical details, see the following pages.

GIB AQUALINE® WET AREA SYSTEMS – TYPICAL DETAILS

Shower – Tiled Walls and Base

MARCH 2007

A GAW-D018

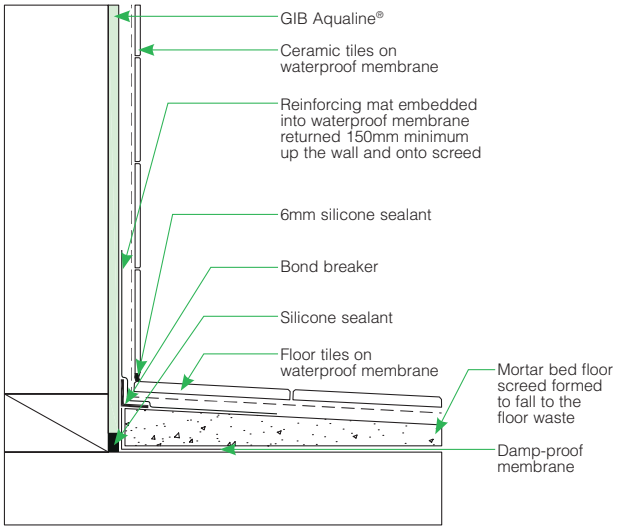

B GAW-D019

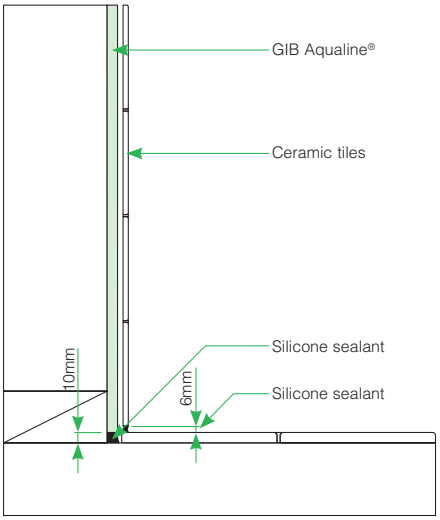

C GAW-D020

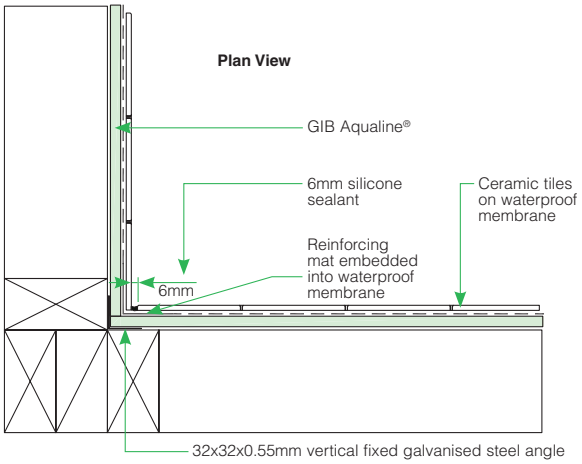

D GAW-D021

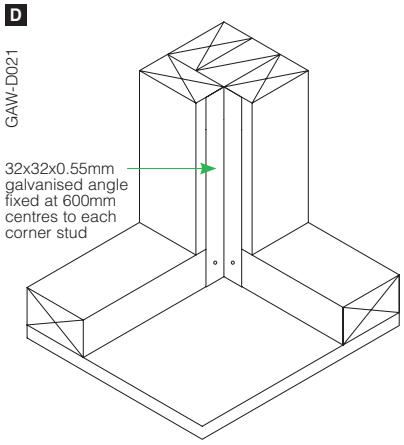

E GAW-D022

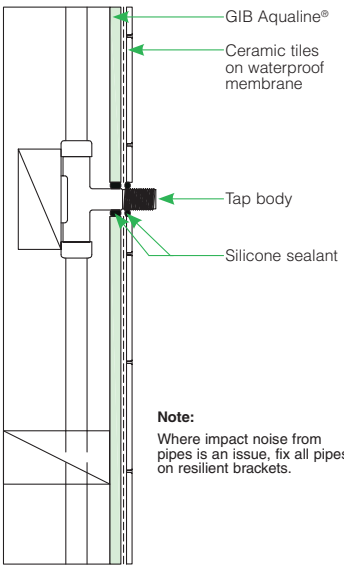

Note:
Where impact noise from pipes is an issue, fix all pipes on resilient brackets.

Shower – Tiled Walls and Acrylic Base

MARCH 2007

A GAW-D023

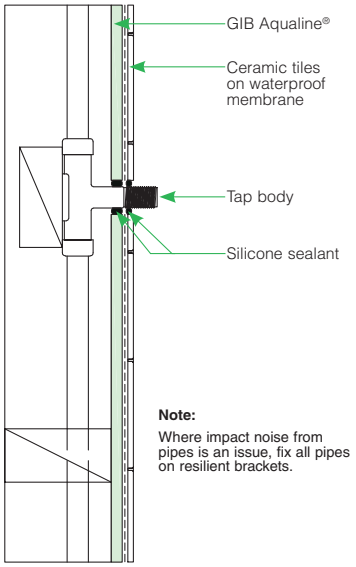

B GAW-D024

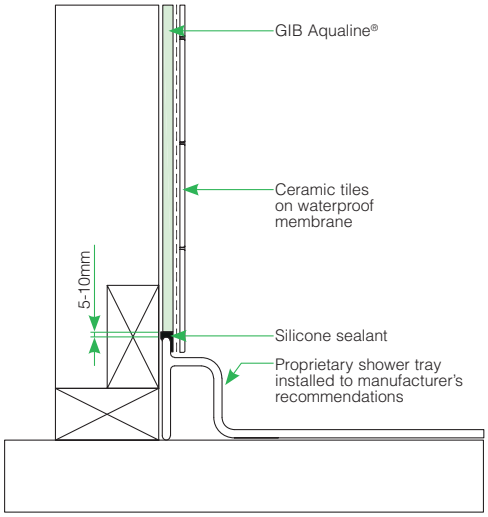

C GAW-D025

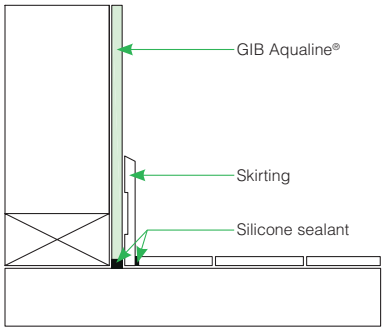

D GAW-D026

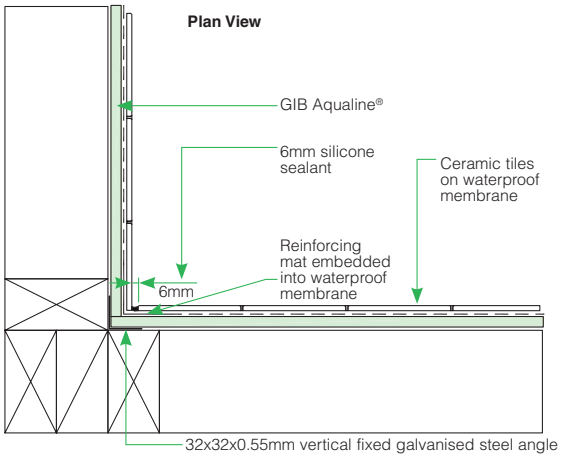

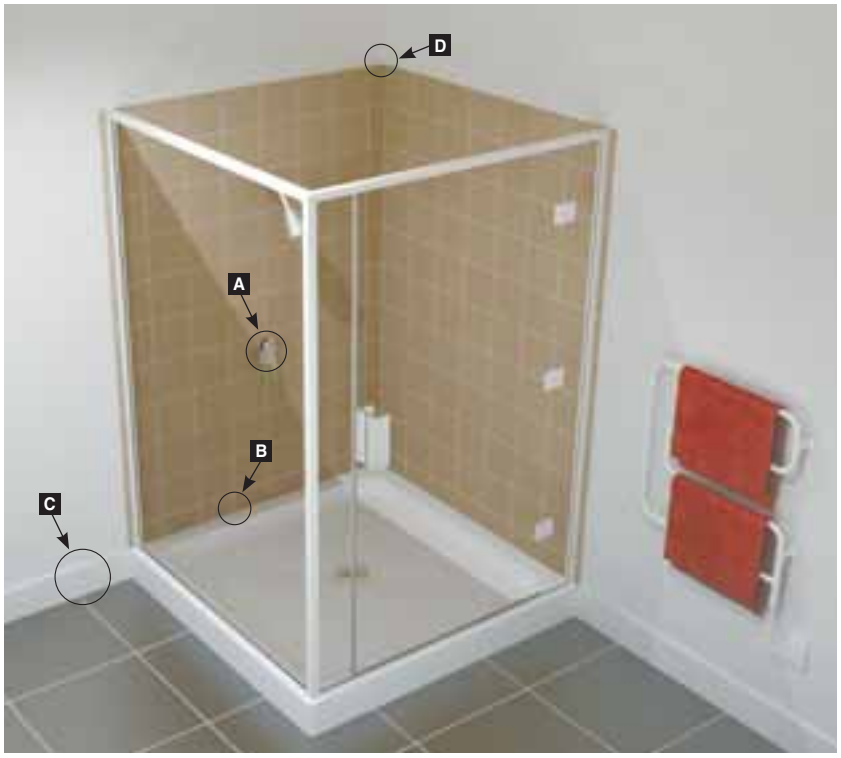

Shower – Acrylic Liner and Base

MARCH 2007

A

GAW-D027

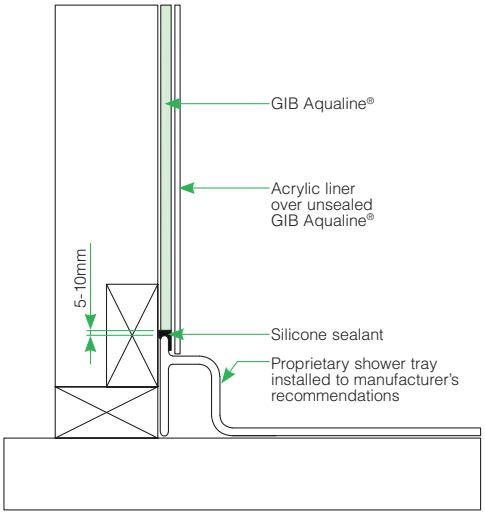

B

GAW-D028

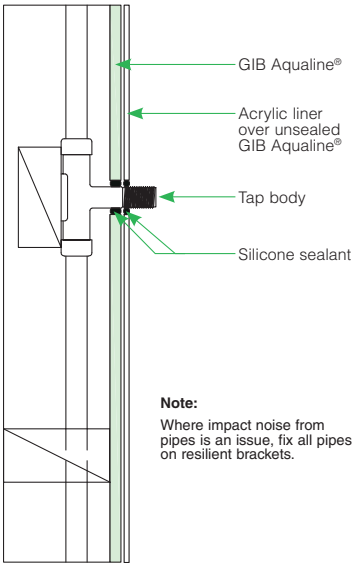

Note:

Where impact noise from pipes is an issue, fix all pipes on resilient brackets.

C

GAW-D029

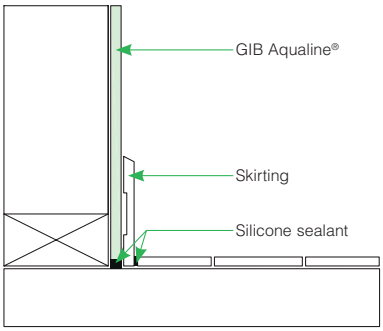

D

GAW-D030

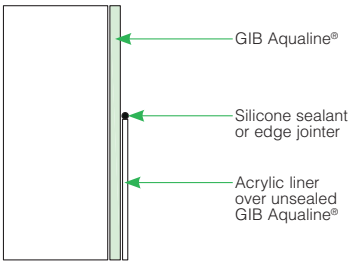

GIB AQUALINE® WET AREA SYSTEMS – TYPICAL DETAILS

Kitchen and Laundry

MARCH 2007

A

GAW-D031

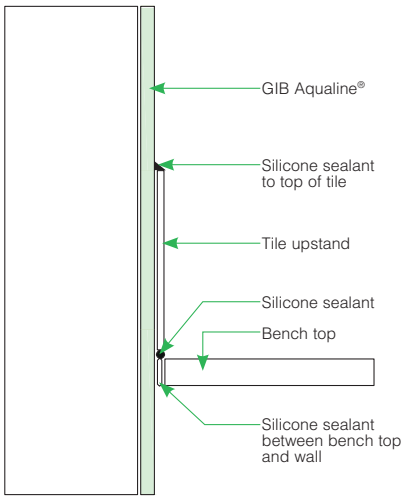

B

GAW-D032

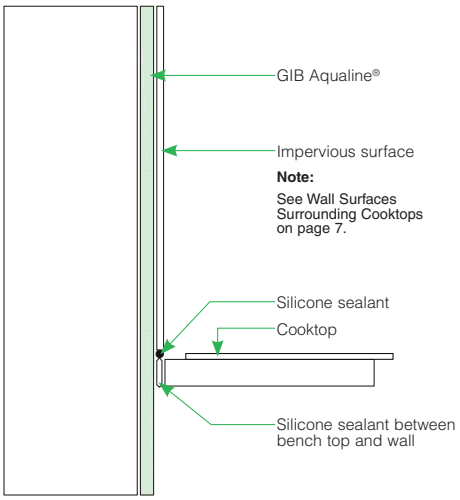

C

GAW-D033

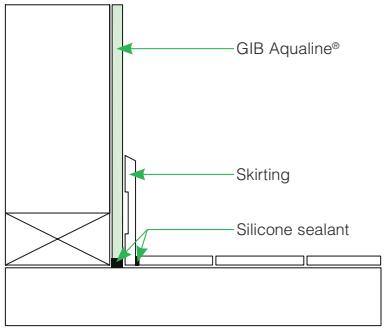

Office, Workplace or School Bathroom

MARCH 2007

A

GAW-D034

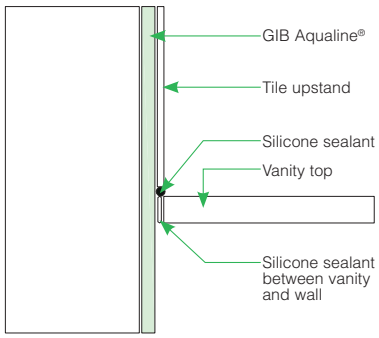

B

GAW-D035

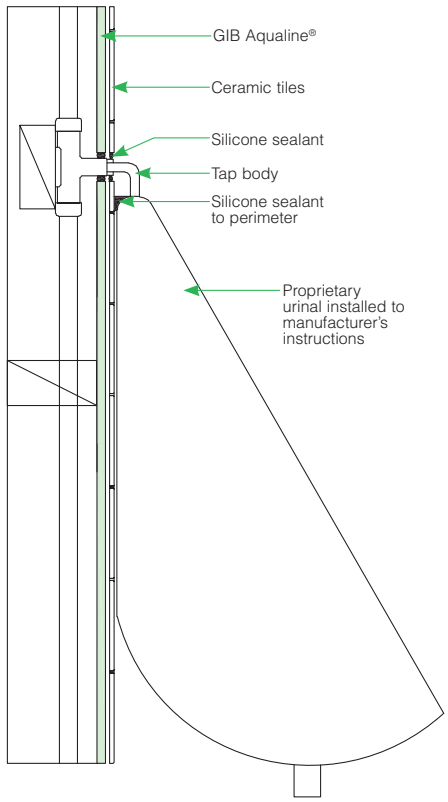

GIB AQUALINE® WET AREA SYSTEMS – TYPICAL DETAILS

Healthcare and Hospital Bathroom

MARCH 2007

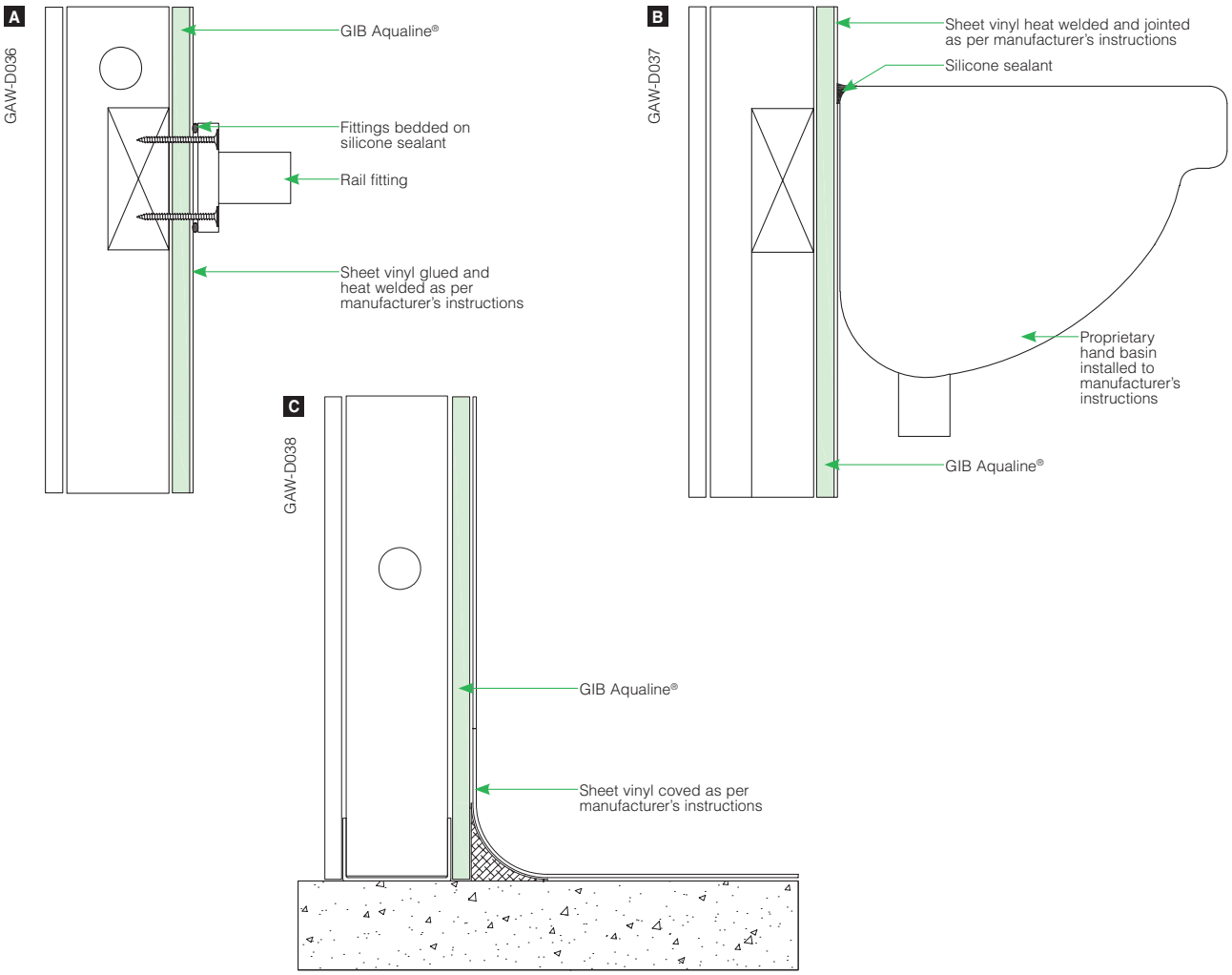

Fire Rated and Noise Control

MARCH 2007

Shower – Acrylic Liner

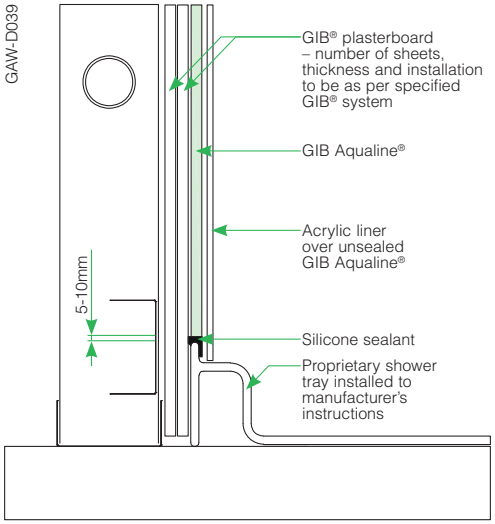

Shower – Tiled Walls

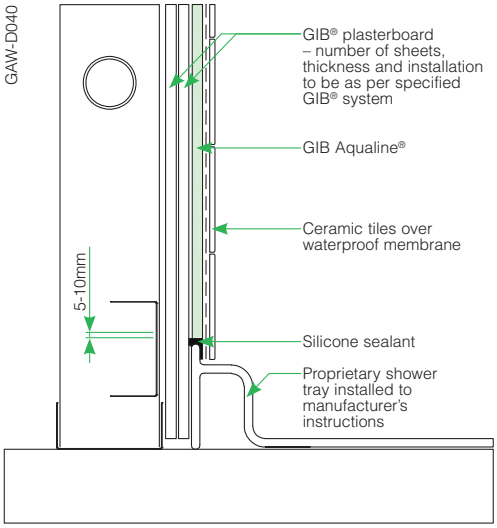

Shower Over Bath – Acrylic Liner

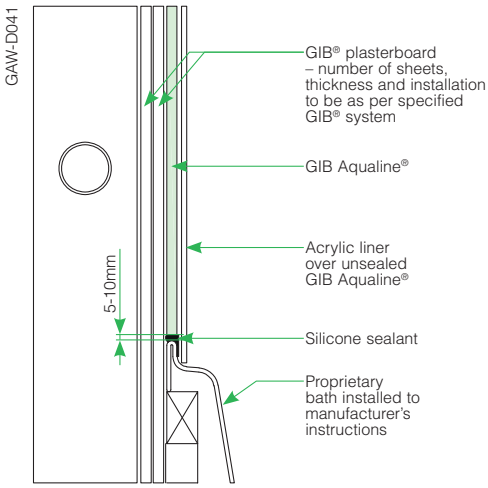

Shower Over Bath – Tiled Walls

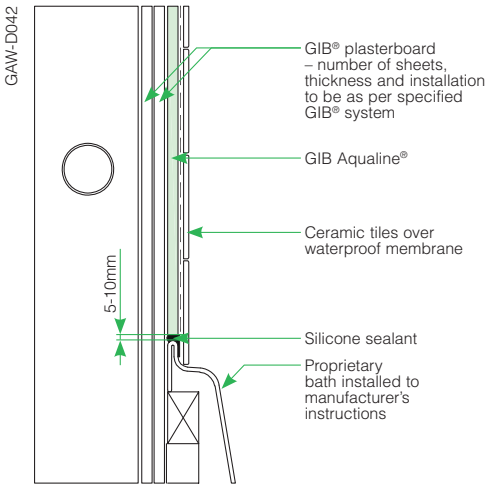

GIB Aqualine® Fire Resistance and Noise Control Performance

When GIB Aqualine® is substituted into GIB® Fire Rated systems in place of the equivalent thickness GIB Fyreline®, the Fire Resistance Rating (FRR) of that system will be maintained.

When GIB Aqualine® is substituted into GIB® Noise Control systems in place of the equivalent thickness GIB® Standard plasterboard or GIB Fyreline®, the STC and IIC rating of that system will be maintained. When GIB Aqualine® is substituted in place of the equivalent thickness GIB Noiseline®, a small performance loss may occur. For further information contact the GIB® Helpline on 0800 100 442.

Specification and Installation Checklist

MARCH 2007

Contract ID	
Site Address	
Client Name	
Designer	
Builder	
Plasterboard Installer	
Plasterboard Supplier	
Tiler	
Shower Installer	

DESIGNER	YES	NO	CHECKED BY	DATE
GIB Aqualine® specified for wet areas and appropriate details included on plans?				
Are tiled areas clearly shown on plans?				
Is area requiring waterproof membrane clearly shown on plan?				
Is the waterproof membrane required to be installed by a licensed applicator? If so, is this noted on the documentation?				
No bracing behind shower or bath?				
BUILDER	**YES**	**NO**	**CHECKED BY**	**DATE**
Galvanised steel angle installed to the internal corners of tiled shower?				
All sheet joints in showers to be made on solid timber. This may require some additional dwangs for horizontal board installation.				
PLASTERBOARD INSTALLER	**YES**	**NO**	**CHECKED BY**	**DATE**
10mm GIB Aqualine® for tiles up to 20kg per m^2?				
13mm GIB Aqualine® for tiles up to 32kg per m^2?				
GIB Aqualine® mechanically fastened at 100mm centres when tiles are to be installed?				
All junctions between GIB Aqualine® and walls, floors, baths, showers and other elements are correctly sealed with appropriate sealant?				
Pipe penetrations sealed?				
PLASTERBOARD STOPPER	**YES**	**NO**	**CHECKED BY**	**DATE**
Air drying compound (e.g. GIB ProMix® or GIB Plus 4®) not to be used on areas to be tiled.				
Recommended that GIB® AquaMix is used in wet areas.				
TILER	**YES**	**NO**	**CHECKED BY**	**DATE**
Waterproof membrane applied to shower areas prior to tiling?				
SHOWER INSTALLER	**YES**	**NO**	**CHECKED BY**	**DATE**
GIB Aqualine® walls must not be sealed or painted under where acrylic linings are to be installed.				
Ensure GIB Aqualine® is free from dust before installation of acrylic liners.				
Sealant applied to top edge of acrylic shower linings?				
BUILDER/PLUMBER	**YES**	**NO**	**CHECKED BY**	**DATE**
Sealant applied under penetration face covers?				

HardieGlaze™
LINING

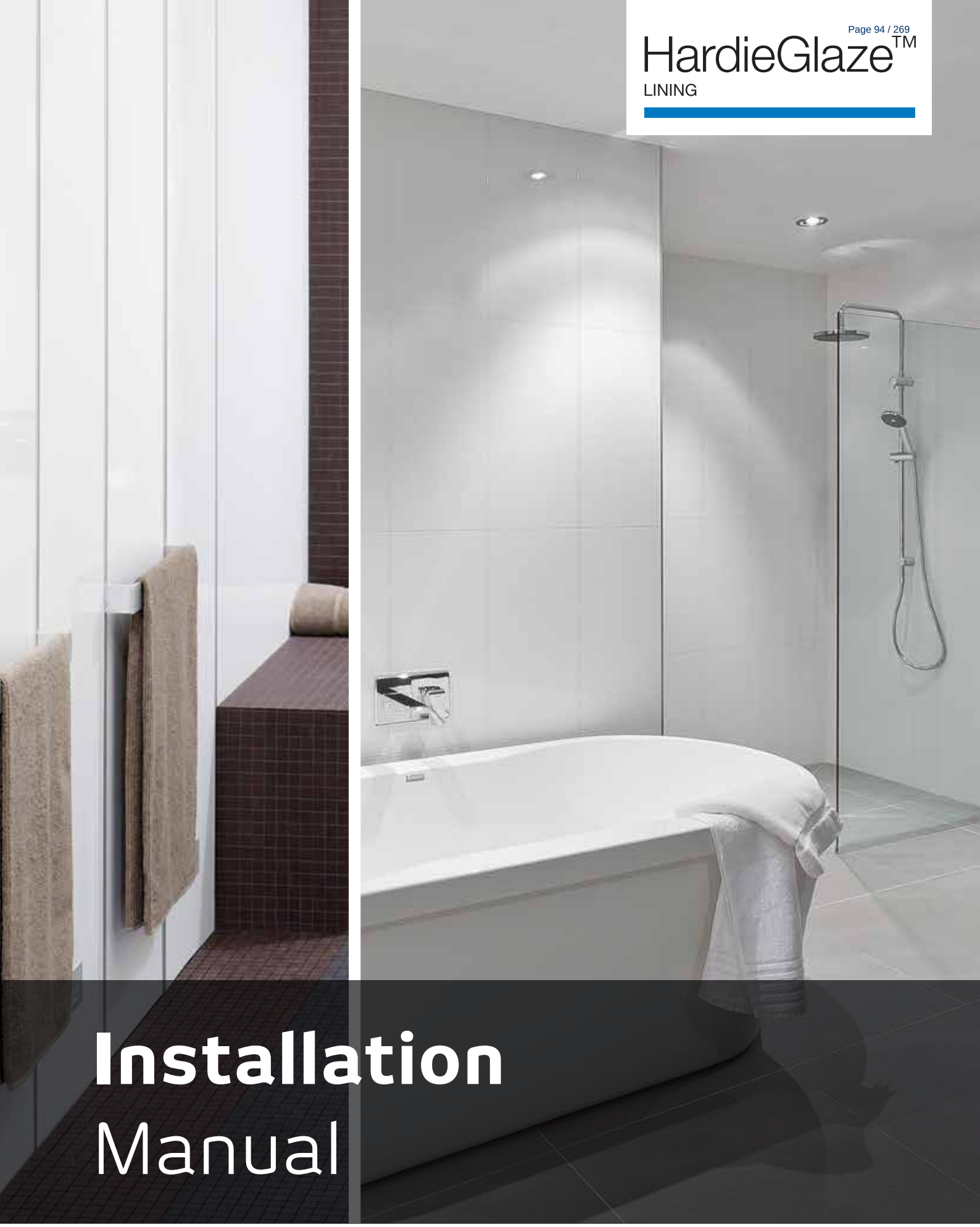

Installation Manual

APRIL 2014 | NEW ZEALAND

James Hardie
a smarter way™

Content

1 INTRODUCTION 3
1.1 Introduction 3
1.2 HardieGlaze™ Smooth Lining 3
1.3 HardieGlaze™ Tile Lining 3
1.4 HardieGlaze™ Premium Lining 3
2 SAFE WORKING PRACTICES 8
3 SCOPE 10
4 DESIGN 11
4.1 Compliance 11
4.2 Durability 11
4.3 Food Preparation and Prevention of Contamination 11
4.4 Structural Bracing 11
4.5 'Group Number' Classification 11
5 FRAMING/SUBSTRATE 11
5.1 General Requirements 11
5.2 Timber Frame 11
5.3 Steel Frame 11
5.4 Batten Requirements for Timber or Steel 11
6 INSTALLATION 12
6.1 HardieGlaze™ Lining Installation Checklist 12
6.2 Packers 13
6.3 Sheet Set-out and Shower Rose Location 13
6.4 Horizontal Sheet Laying 13
6.5 General Fixing Requirements 13
6.6 Sheet Fixing Sequence for Showers 15
6.7 Adhesive Fixing 14
6.8 Adhesive/Fastfix Fixing 16
6.9 Sheet Fixing with Fastfix Only 16
6.10 Raised-Head Screw-Fixing Method 16
6.11 Ceramic Tile Inserts 16
7 JOINTING 17
7.1 Silicone Jointing Procedures 17
7.2 Dry Area Wall Joints 17
7.3 Wet Area Wall Joints 17
7.4 External Corner Joints 18
7.5 Internal Corner Joints 18
7.6 Wall-to-Ceiling Joints 18
7.7 Wet Area Wall-to-Floor Joints 18
8 SPECIAL APPLICATION 20
8.1 Indoor Swimming Pool Application 20
8.2 Splashback 20
8.3 Wet Area Penetration 20
9 PRODUCT INFORMATION 21
9.1 Product Description 21
9.2 Product Application 21
9.3 Serviceable Life 21
9.4 Sheet Properties 21
9.5 Sheet Moisture Content and Mass 21
9.6 Fire Properties 21
10 MAINTENANCE 22
10.1 General 22
10.2 Cleaning Procedures 22
PRODUCT WARRANTY 23

WE VALUE YOUR FEEDBACK

To continue with the development of our products and systems, we value your input. Please send any suggestions, including your name, contact details, and relevant sketches to:

Ask James Hardie™
Fax 0800 808 988
literaturefeedback@jameshardie.co.nz

1 Introduction

1.1 INTRODUCTION

At James Hardie, our focus is to provide you with the best. That's why James Hardie building products are the proven performers, always the right choice for your building needs.

The best products are certainly what you need when it comes to interior wall and ceiling linings in wet areas like bathrooms, kitchens, laundries and toilets. That's why you'll choose HardieGlaze™ Lining.

- Good looks and durable.
- Ease of installation with a professional finish.
- High quality, affordable and no fuss to maintain.

HardieGlaze Lining is a pre-finished wall and ceiling lining made from James Hardie fibre cement. Choose the easy-clean high-gloss polyurethane-coated finish that's right for your design needs — HardieGlaze Tile, Smooth or Premium. So simple to install and there's no backing substrate required. You can do it all yourself and complete with PVC or aluminium jointers. Silicone jointing is also available for 6.0mm HardieGlaze Lining. Because it's made from James Hardie fibre cement, HardieGlaze Lining is resistant to fire and damage from moisture*, rotting and cracking, when installed and maintained in accordance to the technical specifications in this manual.
For advice on HardieGlaze Lining, Ask James Hardie™ on 0800 808 868.

HardieGlaze Lining is only for use in internal applications.

** to the extent set out in section 8.*

1.2 HARDIEGLAZE SMOOTH LINING 4.5MM

HardieGlaze Smooth Lining is a 4.5mm square edge sheet that has a high gloss white easy to clean finish.

Can be finished with PVC or aluminium jointers.

1.3 HARDIEGLAZE TILE LINING 6MM

Enjoy the benefits of classic wet area wall patterning without the hassles and costs associated with ceramic tiles. HardieGlaze Tile Lining has three tile patterns embossed into an elegant high-gloss polyurethane coating on a 6mm-thick sanded James Hardie fibre cement surface. This eliminates the need for grouting and heavy substrates. HardieGlaze Tile Lining is available in white and features a special radiused edge allowing for silicone jointing, or with PVC or aluminium jointers.

1.4 HARDIEGLAZE PREMIUM LINING 6MM

6mm-thick HardieGlaze Premium Lining is designed for commercial and industrial interiors. Its high-gloss finish means a quick wipe is all that's needed for cleaning to ensure it will retain its good looks. HardieGlaze Premium Lining is the ideal choice in food processing and industrial areas where strict hygiene conditions apply. The radiused edges of HardieGlaze Premium Lining allow for attractive silicone jointing, or you can finish it with PVC or aluminium jointers.

Table 1

HardieGlaze Lining information					
PRODUCT	**DESCRIPTION**	**QUANTITY / SIZE**			
	HardieGlaze Smooth Lining High-gloss polyurethane finish. Is back sealed. Available in white.	**THICKNESS: 4.5MM**			
		LENGTH (MM)	**WIDTH (MM)**	**COLOUR**	**CODE**
		2400	1200	White	**400221**
		2400	900	White	**400225**
	HardieGlaze Tile Lining Square-tile pattern embossed into a hard-wearing, high gloss polyurethane coating. Is back sealed. Available in white.	**THICKNESS: 6MM**			
		LENGTH (MM)	**WIDTH (MM)**	**COLOUR**	**CODE**
		2700	1200	White	**400237**
		2400	1200	White	**400240**
		2400	900	White	**400243**
	HardieGlaze Tile Lining Grande Tile pattern embossed into a hard-wearing, high gloss polyurethane coating. Is back sealed. Available in white.	2400	1200	White	**404390**
	HardieGlaze Tile Lining Listello Tile pattern embossed into a hard-wearing, high gloss polyurethane coating. Is back sealed. Available in white.	2400	1200	White	**404391**
	HardieGlaze Premium Lining High-gloss polyurethane finish, back sealed, designed for residential, commercial and industrial wet and dry areas, ideal for food processing areas where strict hygiene conditions apply. Available in white.	**THICKNESS: 6MM**			
		LENGTH (MM)	**WIDTH (MM)**	**COLOUR**	**CODE**
		2700	1200	White	**400210**
		2400	1200	White	**400211**

Note:

HardieGlaze Lining must have primer applied where indicated in this manual.

All dimensions and masses provided are approximate only and subject to manufacturing tolerances.

Table 2

Jointers and mouldings for 4.5mm HardieGlaze Smooth Lining only				
	Accessory	**Size (mm)**	**Material/appearance**	**Code**
	Sheet Jointer	Length 2400	PVC Gloss White	**300690**
	Cap Mould	Length 2400	PVC Gloss White	**300678**
	External Corner Mould	Length 2400	PVC Gloss White	**300682**
	Internal Corner Mould	Length 2400	PVC Gloss White	**300686**
	Bath Mould 4.5mm	Length 2500	PVC Gloss White	**300674**
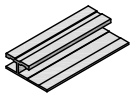	Sheet Jointer	Length 2700	Aluminium Naturally Anodised	**304507**
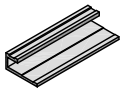	Cap Mould	Length 2700	Aluminium Naturally Anodised	**304501**
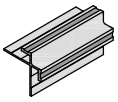	External Corner Mould	Length 2700	Aluminium Naturally Anodised	**304503**
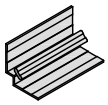	Internal Corner Mould	Length 2700	Aluminium Naturally Anodised	**304505**

Table 3

Jointers and mouldings for 6.0mm HardieGlaze Lining only				
	Accessory	**Size (mm)**	**Material/appearance**	**Code**
	Sheet Jointer	Length 2700	PVC Gloss White	**300713**
	Cap Mould	Length 2700	PVC Gloss White	**300695**
	Internal Corner Mould	Length 2700	PVC Gloss White	**300707**
	External Corner Mould	Length 2700	PVC Gloss White	**300701**
	Bath Mould 6mm	Length 2500	PVC Gloss White	**300691**
	Flexible-edge 2-piece Internal PVC Corner Mould	Length 2700	PVC Gloss White	**300946**
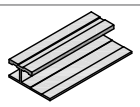	Sheet Jointer	Length 2700	Aluminium Naturally Anodised	**304506**
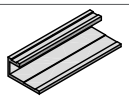	Cap Mould	Length 2700	Aluminium Naturally Anodised	**304500**
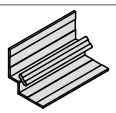	Internal Corner	Length 2700	Aluminium Naturally Anodised	**304504**
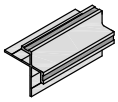	External Corner	Length 2700	Aluminium Naturally Anodised	**304502**
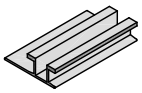	Negative Jointer	Length 2700	Aluminium Naturally Anodised	**305212**
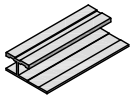	Sheet jointer	Length 2700	Aluminium White	**305750**
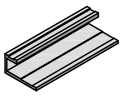	Cap mould	Length 2700	Aluminium White	**305751**
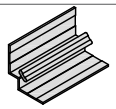	Internal Corner	Length 2700	Aluminium White	**305749**
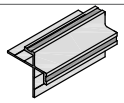	External Corner	Length 2700	Aluminium White	**305748**

Table 4

HardieGlaze Lining accessories for the full 4.5mm and 6mm range				
	Accessory	**Size (mm)**	**Material/appearance**	**Code**
	Fastfix Fasteners	Length 40 100 per pack	Nylon Gloss White	**300632**
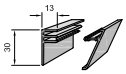	Scotia Mould	Length 2400	PVC Gloss White 2-piece Base and Cap	**300916**
	Touch-up Paint Kits	15ml	White	
	HardieBlade Saw Blade	185ømm		**300660**
	James Hardie Two Sided Adhesive Tape To go on timber framing as optional fixing used in conjunction with adhesive fixing	12mm x 33m	Red Tape	**305433**

Table 5

Components not supplied by James Hardie			
The following products are for use in conjunction with HardieGlaze Lining. James Hardie does not supply these products. Please contact component manufacturer for information on their warranties and further information on their products.			
Accessory	**Brands**	**Unit**	**Quantity**
	Score-and-snap knife		
Sealer	Dulux Acraprime 501/1, Dulux Primercryl or similar	Tin	
Bond Breaker	Sellotape 5850 Super Mask 18mm To go behind sealant joint	Roll	55m
Adhesive	Fullers Max Bond, Selley's Liquid Nails, Sika Nailbond Fast, Sika Nailbond® PB, Sika 'Sikaflex-11FC', Bostik 'Seal N Flex -1'or Bostik Tuf As Nails.	Cartridge	
Masking Tape	3M Scotch™ Long-Mask™ #2090 or Sellotape 5855 Long Life	Roll Roll	50m 55m
Sealant	Sika Sikasil NG (translucent) or Sika Sikasil RTV (+ SikaPrimer-3N), Sika Sikasil Wet Areas or Fullers 770 Sanitary.	Cartridge	
Cleaners	Refer clause 10.2		
C-25 Brad Nail	Paslode For fixing aluminium jointer to timber	Box	
Fibreshear Cutter	Accent Tools (09) 415 2545		

2 Safe working practices

WARNING – AVOID BREATHING SILICA DUST
James Hardie products contain sand, a source of respirable crystalline silica which is considered by some international authorities to be a cause of cancer from some occupational sources. Breathing excessive amounts of respirable silica dust can also cause a disabling and potentially fatal lung disease called silicosis, and has been linked with other diseases. Some studies suggest smoking may increase these risks. During installation or handling: (1) work in outdoor areas with ample ventilation; (2) minimise dust when cutting by using either 'Score and Snap' knife, fibre cement shears or, where not feasible, use a HardieBlade™ Saw Blade and dust-reducing circular saw attached to a HEPA vacuum; (3) warn others in the immediate area to avoid breathing dust; (4) wear a properly-fitted, approved dust mask or respirator (e.g P1 or P2) in accordance with applicable government regulations and manufacturer instructions to further limit respirable silica exposures. During clean-up, use HEPA vacuums or wet cleanup methods – never dry sweep. For further information, refer to our installation instructions and Safety Data Sheets available at www.jameshardie.co.nz

FAILURE TO ADHERE TO OUR WARNINGS, SAFETY DATA SHEETS, AND INSTALLATION INSTRUCTIONS MAY LEAD TO SERIOUS PERSONAL INJURY OR DEATH.

James Hardie recommended safe working practices
CUTTING OUTDOORS
1. Position cutting station so wind will blow dust away from the user or others in working area. 2. Use one of the following methods based on the required cutting rate: **BEST** • Score and snap • Hand guillotine • Fibreshear **BETTER** • Dust reducing circular saw equipped with HardieBlade™ Saw Blade and HEPA vacuum extraction. **GOOD** • Dust reducing circular saw with HardieBlade™ Saw Blade.
CUTTING INDOORS
• Cut only using score and snap, hand guillotine or fibreshears (manual, electric or pneumatic) • Position cutting station in well-ventilated area
SANDING/REBATING/DRILLING/OTHER MACHINING
When sanding, rebating, drilling or machining you should always wear a P1 or P2 dust mask and warn others in the immediate area.
IMPORTANT NOTES
1. For maximum protection (lowest respirable dust production), James Hardie recommends always using "Best" — level cutting methods where feasible. 2. NEVER use a power saw indoors. 3. NEVER use a circular saw blade that does not carry the HardieBlade™ logo. 4. NEVER dry sweep — Use wet suppression or HEPA vacuum. 5. NEVER use grinders. 6. ALWAYS follow tool manufacturer's safety recommendations.
P1 or P2 respirators can be used in conjunction with above cutting practices to further reduce dust exposures. Additional exposure information is available at to help you determine the most appropriate cutting method for your job requirements. If concern still exists about exposure levels or you do not comply with the above practices, you should always consult a qualified industrial hygienist or contact James Hardie for further information.

Handling and storage

HardieGlaze Lining sheets must be stacked flat on a smooth level surface. Protect edges and corners from damage. Carry sheets on edge. Store under cover and keep dry prior to fixing.

Note: Stacking the sheets on edge may cause damage to the radius sheet edges on HardieGlaze Tile and Premium Lining.

HardieGlaze Tile and Premium Lining have a protective, removable film. Leave this in place until after installation is completed. Before fixing begins, check the batch numbers on each sheet to ensure colour match. Measurements and cutting line can be marked on the film which also keeps the product clean and scratch free.

Always top stow the product when in transit or when on site.

Cut-edge sealing

Before any sealants are applied to site-cut HardieGlaze Lining sheet edges, the raw edge must be site primed. Use Dulux Primercryl, Dulux Acraprime 501/1 or similar. Be careful not to miss any areas. All site-cut sheet edges for silicone joints must be site sealed. All HardieGlaze Premium Lining sheet edges must be sealed for all installations. For best results in shower applications always use the factory-finished edge for the bottom drip edge.

Working instructions

Refer to recommended Safe Working Practices before starting any cutting or machining of product.

Score-and-snap

Score-and-snap is a fast and efficient method of cutting. Use a special tungsten tipped score-and-snap knife (refer to illustration).

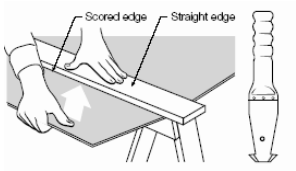

- Position the straight-edge along the line of the cut.
- Score against the straight-edge and repeat the action to obtain adequate depth for a clean break — normally one-third of the sheet thickness.
- Snap upwards to achieve break.
- Clean up the edges with a rasp and sandpaper if necessary.

Note: The straight-edge must be firmly held as the coating on the surface can easily cause it to slip and damage the coating.

HardieBlade Saw Blade

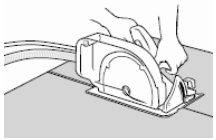

The HardieBlade Saw Blade used with a dust-reducing saw connected to a HEPA vacuum is ideal for fast, clean cutting of James Hardie fibre cement products.
A dust-reducing saw uses a dust deflector or a dust collector connected to a vacuum system. When sawing, clamp a straight-edge to the sheet as a guide and run the saw base plate along the straight edge when making the cut.

Hole-Forming

For smooth clean cut circular holes:

Mark the centre of the hole on the sheet. Pre-drill a ‘pilot’ hole.

Using the pilot hole as a guide, cut the hole to the appropriate diameter with a hole saw fitted to a heavy duty electric drill.

For irregular holes:

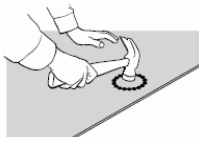

Small rectangular or circular holes can be cut by drilling a series of small holes around the perimeter of the hole then tapping out the waste piece from the sheet face.

Tap carefully to avoid damage to sheets, ensuring that the sheet edges are properly supported.

The following alternative method can be used for square or rectangular wall openings:

- Mark the outside of the hole on the face side of sheet.
- Drill a hole in each corner as shown.
- Score to the outside of the holes to half of the sheet depth.
- Turn the sheet over and score the reverse face of the sheet.
- Knock out the hole and clean up with a rasp and coarse sandpaper.

For rectangular holes:

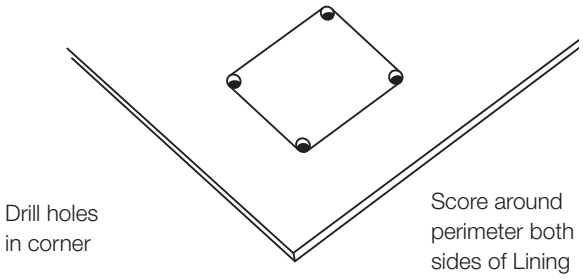

Quality

James Hardie conducts stringent quality checks to ensure that any product manufactured falls within our quality spectrum. It is the responsibility of the builder to ensure that the product meets aesthetic requirements before installation. James Hardie will not be responsible for rectifying obvious aesthetic surface variations following installation.

3 Scope

Table 6

HardieGlaze Lining is suitable for use in wet or dry areas that require a sealed, impervious surface and is easy to clean for residential or commercial applications as explained in the table below.

HardieGlaze Lining is also suitable for use in areas which require protection from dirt and bacteria build-up.

HardieGlaze Premium can also be used in strict hygiene areas where the entire surface must be easy to clean and completely impervious to meet hygiene requirements for food processing and preparation.

Application examples		**HardieGlaze Lining options**
Residential	**Commercial**	
Showers Laundries Bathrooms Toilets Kitchens	Changing rooms Shop linings Veterinarian clinics Butcher shops Commercial kitchens Industrial and commercial showers and wet area linings	Smooth* Tile* Premium*
Strict hygiene:		Premium* only with silicone joints. Silicone sealant must be approved for use in food/hygiene areas. Refer to sealant manufacturer for information.

*Maximum serviceable temperatures up to 60°.

Figure 1: HardieGlaze Tile Lining pattern

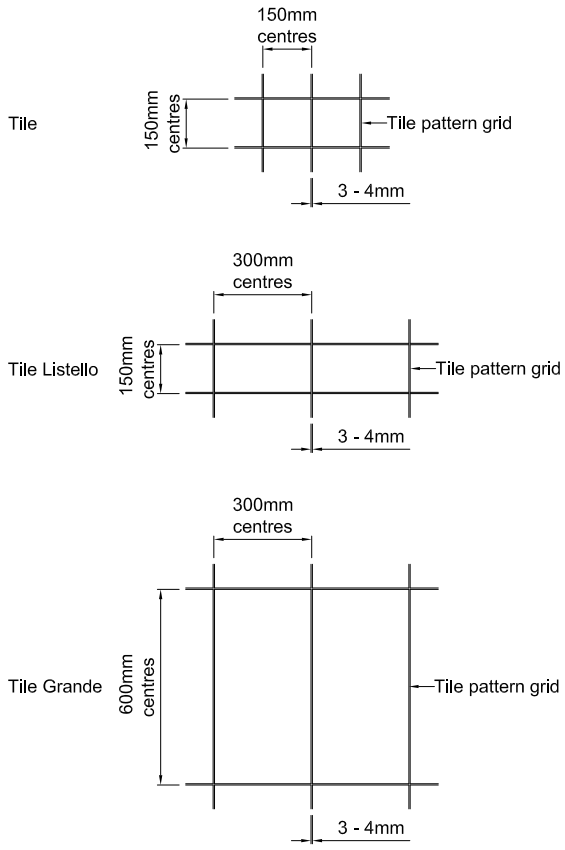

Figure 2: HardieGlaze Tile and Premium Lining edge finish

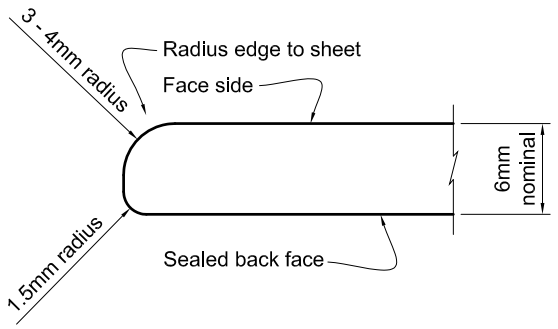

Notes:

1. The paint finish is carried to the sheet radius edge to allow for silicone sealant joints to be used in the installation.
2. Where possible sheet edges with greater coverage (typically one end) are best orientated so that they are the lowest edge.

4 Design

4.1 COMPLIANCE

HardieGlaze Lining complies with section 3.1.2 of clause E3/AS1 of the New Zealand Building Code (NZBC). HardieGlaze Lining must be installed in accordance with this specification to satisfy the relevant provisions of the NZBC.

4.2 DURABILITY

HardieGlaze Lining is not susceptible to long-term moisture damage. When jointing, sealing, flashing and coating details (as outlined in this specification) are maintained, HardieGlaze Lining is expected to have a serviceable life of at least 15 years.

4.3 FOOD PREPARATION AND PREVENTION OF CONTAMINATION

The surface of HardieGlaze Premium Lining also complies with the requirements of Clause G3 of the NZBC, when fixed to the strict hygiene requirements of this installation manual.

4.4 STRUCTURAL BRACING

Because the sheets are adhesive-fixed they are not suitable for structural sheet bracing. When structural sheet bracing is required, mechanically fix a sheet of Villaboard® Lining to give the bracing rating required, then adhesive-fix the HardieGlaze Lining onto the face of the Villaboard Lining. Refer to the James Hardie Design Manual for further bracing information.

4.5 'GROUP NUMBER' CLASSIFICATION

Internal wall linings are required to be tested to establish their 'Group Numbers' in accordance with ISO 5660 or ISO 9773 specified in 'Protection from Fire' clause C of the NZBC. HardieGlaze Lining has been tested and has 'Group Number 1-S' classification. This is the best performance that can be expected of a prefinished wall lining.

5 Framing/ substrate

5.1 GENERAL REQUIREMENTS

HardieGlaze Lining can be fixed directly to both timber and steel frame construction, load bearing and non-load bearing. All framework for walls and ceilings must comply with this specification and applicable current New Zealand standards.

Studs must be spaced at a maximum of 600mm centres with continuous top and bottom plates and nogs at 1200mm maximum centres.

Sheet fixing tolerances are at a minimum when a steel frame is used, therefore setting out must be accurate.

5.2 TIMBER FRAME

Timber framing must be in accordance with NZS 3604 'Timber Framed Buildings'. Refer to NZS 3602 regarding treatment requirements and allowable moisture contents of timber. Specific design to NZS 3603 and AS/NZS 1170 can also be undertaken providing that:

- the framing centres do not exceed those given in this specification;
- the framing member widths conform to this specification.

HardieGlaze Lining must not be fixed to timber framing that exceeds the required specified moisture content as per NZS 3602. Timber framing is to be 45mm minimum width.

5.3 STEEL FRAME

The details in this brochure are drawn for timber framing. However, steel framing can also be used at the same framing centres as for timber frame.

Steel framing members of load-bearing construction must be fabricated from light-gauge sheet steel 0.55mm to 1.6mm thick.

Steel framing for non load-bearing construction must be a minimum of 0.55mm thick. The frames must be firmly secured together and must not rely on the sheeting for stability. The minimum flange width of 38mm is required to adequately adhere the sheets. Instructions by the proprietary framing manufacturer must be followed.

Figure 3: HardieGlaze Lining batten layout

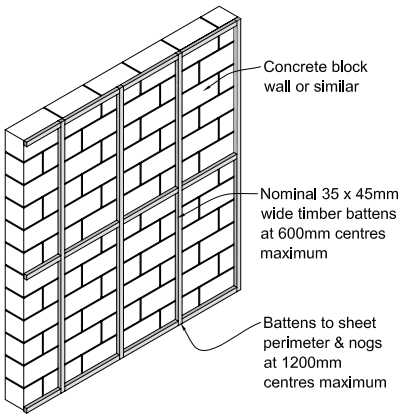

Note: Steel battens 72mm wide x 23mm deep x 0.55mm thick, with a minimum bearing surface of 38mm and with minimum 275g/m^2 zinc coating, can also be used.

5.4 BATTEN REQUIREMENTS

Timber/steel battens are required when sheets are fixed over:

- polystyrene or similar substrates;
- concrete, masonry block or brick.

Allow concrete or block walls to dry out before battening and ensure that all exterior faces are adequately sealed.

5.4.1 BATTENING SPECIFICATION

Refer to Figure 3. Take care to ensure the battens are packed and aligned to give a true even surface for the sheets to be fixed. Check the face of the battens with a long straight-edge before fixing the sheets.

5.4.2 FIXING TO FIBRE CEMENT OR PLASTERBOARD

HardieGlaze Lining can either be fixed directly to the framing or fixed directly over James Hardie Villaboard Lining or plasterboard.

6 Installation

6.1 HARDIEGLAZE LINING INSTALLATION CHECKLIST

Step 1: Before you start

- Read the information in this manual. Note that HardieGlaze Lining is NOT suitable for floors, benchtops, exterior cladding or exterior signage.
- Check that timber for framing is dry — the moisture content as per the NZS 3602 (refer page 11).
- Check the sheet batch numbers to ensure the sheets are all from the same batch to be colour matched.
- Ensure the timber and sheet surface are free from any dirt or grime before installation.

Step 2: Assemble your tools

- Caulking gun
- Hand saw
- Hammer
- Electric drill and titanium bits
- Level
- Tape measure
- Saw horses
- Rasp
- Pencil
- Score-and-snap knife.

Step 3: Check your materials

- HardieGlaze Lining sheets 900mm or 1200mm wide.
- Solvent-based wallboard adhesive (refer page 14).
- PVC or aluminium sheet jointers and mouldings (refer Tables 3-5).
- Silicone sealant (refer Figures 14 and 15) and recommended masking tape.
- Polyurethane bondbreaker tape.
- Timber cut to length for temporarily bracing sheets into place (refer page 16).
- Batch no.s are identical.
- Arrow directions on tile.

Step 4: Choose the installation method

- Ascertain the correct HardieGlaze Lining sheets to meet your specific requirements (refer Tables 1, 6 and 7).
- Choose the appropriate fixing method (refer Table 7).
- Choose the appropriate edge sealing and jointing method.

Step 5: Prepare your walls

- Check framing for flatness and straightness. Plane back any timber high spots.
- Check that all framing is secure and well nailed.
- Punch all framing nails.
- Check that all plumbing and electrical fittings are fixed in the correct location.
- Accurately measure the distances between framing for sheet sizes. Measure at the top, bottom and centre of the frame as a check, and allow tolerances so the sheet will fit easily.

Step 6: Measure the sheets

- When cutting, accurately measure and mark out on the face of the sheet (use a soft builder's pencil). Allow 1 to 2mm clearance each side to fit into jointers.
- When using mouldings, accurately measure the mould to work out allowances for fitting into the moulding.
- Allow for sealant width when using silicone joints.

Step 7: Cut and form the sheets

- Accurately cut the sheets (refer page 8).
- Mark out positions of holes or penetrations in sheets (refer page 9).
- HardieGlaze Lining sheets with cut edges must be site prepared and primed before applying sealant (refer page 9).
- Lining sheets to baths or bottom of showers must have bottom edge and back 100mm sealed (refer to Figure 19, 20 and 21).

Step 8: adhesive, sealant and install the sheets

- Refer to Section 7 for jointing options. Always ensure the timber or sheet surface are free from any dirt or grime before installation.

For aluminium jointing:

- Fix the jointer to the studs first.
- Place sealant in jointers if required (refer Figure 17).
- Fit the sheet into jointer and press onto the adhesive daubs applied over timber frame and pack the sheet off the floor or base with 6mm minimum packers. Hold the sheet in place until temporary bracing is applied.
- When using James Hardie two sided adhesive tapes in conjunction with adhesives, no temporary bracing is required.
- When fixing in a three sided shower, fix the first sheet onto the adhesive with the jointers on both sides of the sheet in place.
- Fix the second and subsequent sheets in place with the jointer to one edge as required (refer section 6.6).
- Ensure that all sheets are truly aligned and fit tightly into jointers, then temporarily brace into place.

For silicone jointing:

- Fix bond breaker tape to the framing behind the joints before fixing sheets (refer Figure 15).
- Press the sheets onto adhesive daubs/bead applied over timber frame and pack the sheet off the floor or base with 6mm minimum packers. Hold the sheet in place until temporary bracing is applied (refer Figure 11).
- Space the correct gap between sheet edges.
- Apply sealant between joints.
- Do not touch silicone sealant with bare fingers as this can encourage mould growth.

Note: A spacer gives the correct gap for HardieGlaze Tile and HardieGlaze Premium Lining (refer to Figure 15).

Sealing Penetrations:

- Apply sealant around taps and fixture penetrations after fixing the sheets into place (refer pages 17–20).

Step 9: Finishing touches

Only use specific masking tapes on surface, refer Table 5. Incorrect tapes can cause coating removal.

- Clean up all sheets and jointers with kerosene on a clean cloth to remove all pencil marks, adhesive or excess sealant.
- Remember to maintain the sheets and clean on a regular basis (refer page 22).

6.2 PACKERS

Use 3mm-4mm thick packers for packing the frame when 6mm HardieGlaze Lining is being used with standard rebated jambs or other situations where the thickness needs to be increased (refer Figure 4).

Figure 4: HardieGlaze Lining jamb rebate

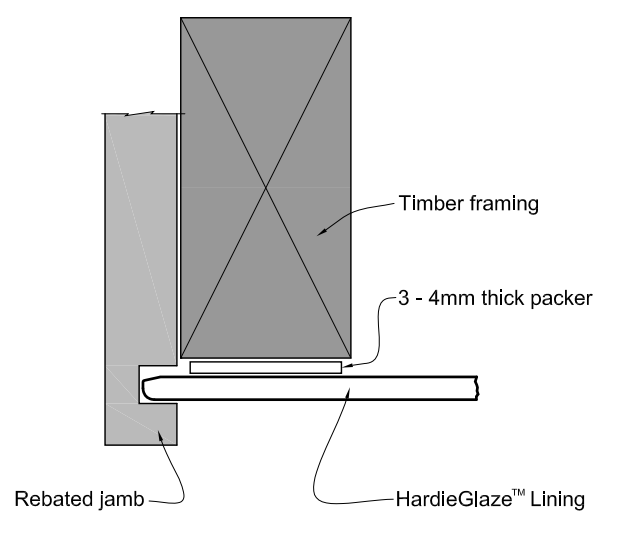

6.3 SHEET SET-OUT AND SHOWER ROSE LOCATION

The vertical set-out of HardieGlaze Tile Lining is important because of its pattern. Choose a horizontal set-out datum line because the module must coincide with the horizontal tile pattern line (refer Figure 5). Set out all sheets to this. The shower rose must be positioned below any ceramic tile inserts or horizontal sheet joints (refer Figure 6). This is to stop water from the shower rose running behind the HardieGlaze sheet.

Figure 5: HardieGlaze Tile Lining vertical setout

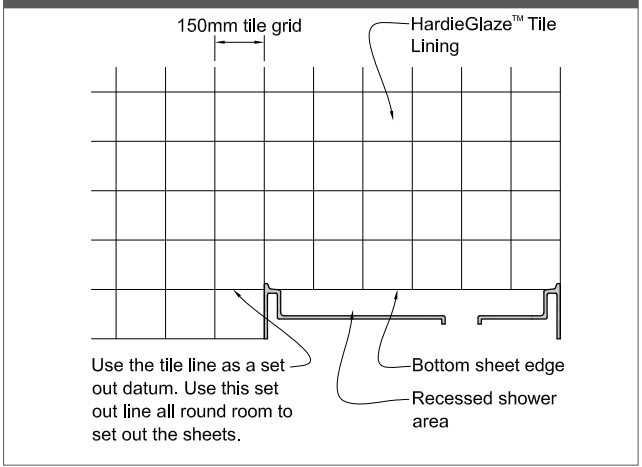

Note: Sheet set-out is important in visible areas of the room. Use full sheets in these areas and save part sheets for less visible corners. If tile pattern set out allows use a factory finished bottom edge in wet areas. Seal bottom edge and 100mm up back of sheet with Dulux Primercryl , Dulux Acraprime 501/1 or similar.

Figure 6: Shower rose location setout

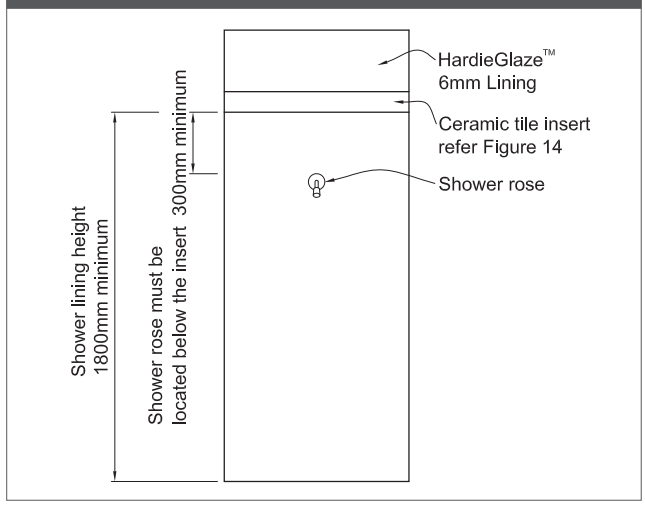

6.4 HORIZONTAL SHEET LAYING

When a ceramic tile insert (refer Figure 14) is required at the 1200mm dado height, HardieGlaze Tile Lining can be laid horizontally. Ensure arrows are facing in the same direction for all sheets.

6.5 GENERAL FIXING REQUIREMENTS

All fixing for walls and ceilings must comply with this specification. At all adhesive-fixed sheet joints, the centre line of the joint must coincide with the centre line of the stud, nog or plate.

This is to ensure sufficient adherence of adjoining sheets to the frame along the sheet edges.

Best practice notes: In wet areas where possible always:

1. Use a factory sealed edge at the bottom.
2. If there is any variation in quality of the factory sheet edges, put the best sheet edge to the bottom.

Fix the sheet from the centre working towards the outside, to avoid drumminess. Fix 4.5mm and 6mm HardieGlaze Lining to the timber or steel frame using solvent-based or foam polyurethane wallboard adhesive (to the centres shown in the relevant diagrams), to the perimeter of all sheets, intermediate studs, plates and nogs. For further adhesive instructions refer to pages 14, 15 and 16.

Sheets must be fixed 6mm clear of the floor for general wall applications. Care must be taken to ensure that this gap does not become filled with residue during the construction process.

Fix pvc or aluminium mouldings with nails or screws at 300mm max centres.

Aluminium mouldings may also be fixed to frame with C-25 brad nails at 300mm maximum centres.

For sheets with a shower base refer to Figures 19, 20 and 21.

6.6 SHEET FIXING SEQUENCE FOR SHOWERS

In shower boxes with sheets on three sides, the fixing sequence is important. Fix the rear sheet first with the jointers in place, then fix the remaining two sheets on sides.

6.7 ADHESIVE FIXING

Adhesive fixing is used to avoid fixing penetrations in the sheet face. Fix HardieGlaze Lining to the framing with a good-quality polyurethane wallboard adhesive.

For adhesive fixing the HardieGlaze Lining sheet can either be fixed in conjunction with James Hardie two sided adhesive tape or the sheet can be temporarily braced for approximately 24 hours to allow the adhesives to cure and gain full adhesion. When using two sided adhesive tape, apply 150mm long strip of tape on the framing in between daubs of adhesive which are applied at 200mm c/c to the entire framing. Refer to Figure 10. Do not apply double sided tape on the stud where an aluminium jointer is fixed as the tape will not allow the HardieGlaze Lining sheet to slide into the jointer.

When using the temporary bracing method always ensure that the edges and the sheet surface is braced adequately and protect the sheet surface against scratching. The bracing member should be aligned with the framing behind HardieGlaze Lining. Support and temporarily brace the sheets during adhesive setting, in accordance with the adhesive manufacturer's instructions (refer to Figure 11). Ensure timber braces are aligned over solid framing behind.

Wallboard adhesives should be suitable for HardieGlaze Lining application in accordance with this manual. Recommended adhesives include: **Sika Nailbond Fast, Sika NailBond® PB, Fullers Maxbond, Bostik Tuf As Nails, Bostik 'Seal-N-Flex-1', Selleys Liquid Nails, Sikaflex-11FC** or similar. Refer to adhesive manufacturers' recommendations to ascertain suitability for the intended use.

- Clean the frame surface before applying the adhesive. Also clean the back surface of HardieGlaze Lining before fixing to remove any loose material/dust.
- Never force sheets into position.
- Place daubs of wallboard adhesive on intermediate studs or battens and nogs at 200mm centres (refer Figures 7 and 8).
- Refer to adhesive manufacturer's recommendations to ascertain if adhesive installation should be daubs or continuous bead and the appropriate size of either.
- Fit aluminium sheet jointers to both sides of the HardieGlaze Lining sheet or allow spacings between the sheets for silicone joints.
- In wet areas, you must use silicone sealant in the aluminium jointers and mouldings.
- The aluminium sheet jointers are brad nail fixed into position at 300mm max centres.
- The edge of the sheets must be spaced appropriately when silicone jointing method is used.
- Once the sheets are adhesive fixed and finally in place, either the temporary bracing is required or adhesive tape is used to hold the sheet (refer Figure 10). Always protect the sheet surface against scratching.

Notes:
1. Refer to adhesive manufacturer's recommendations for use.
2. The contact method of adhesive bonding can also be used by experienced builders.
3. Ensure the room is well ventilated when working with solvents.

Figure 7: HardieGlaze Lining sheet fixing to walls including shower cubicles — adhesive method

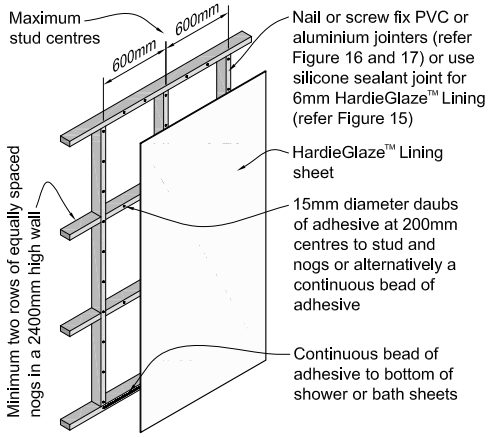

Note: For high impact areas extra nogs must be provided, or fix 6mm Villaboard Lining to the framing before installing HardieGlaze Lining.

Table 7

Fixing for specific applications

Specific application	HardieGlaze Lining	Fixing method options for walls and ceilings
Wet or dry areas that require a sealed impervious surface	Smooth Tile Premium	Use one of the following: • Adhesive (for walls, refer Figure 7; for ceilings, refer Figure 8). • Adhesive/Fastfix (for ceiling, refer Figures 9 and 12).
Dry areas	Smooth Tile Premium	Use one of the following: • Adhesive (for walls, refer Figure 7; for ceilings, refer Figure 8). • Adhesive/Fastfix (refers Figures 9 and 12). • Full Fastfix (refer Figure 12). • Screw (refer Figure 13).
Wet or dry areas that require moderate protection from dirt and bacteria	Smooth Tile Premium	Use one of the following: • Adhesive (for walls, refer Figure 7; for ceilings, refer Figure 8). • Adhesive/Fastfix (for ceiling, refer Figures 9 and 12).
Strict hygiene (MAF compliance)	Premium	Walls: • Adhesive (refer Figure 7). Ceilings: • Adhesive (refer Figure 8)

Figure 8: HardieGlaze Lining sheet fixing to ceilings — adhesive method

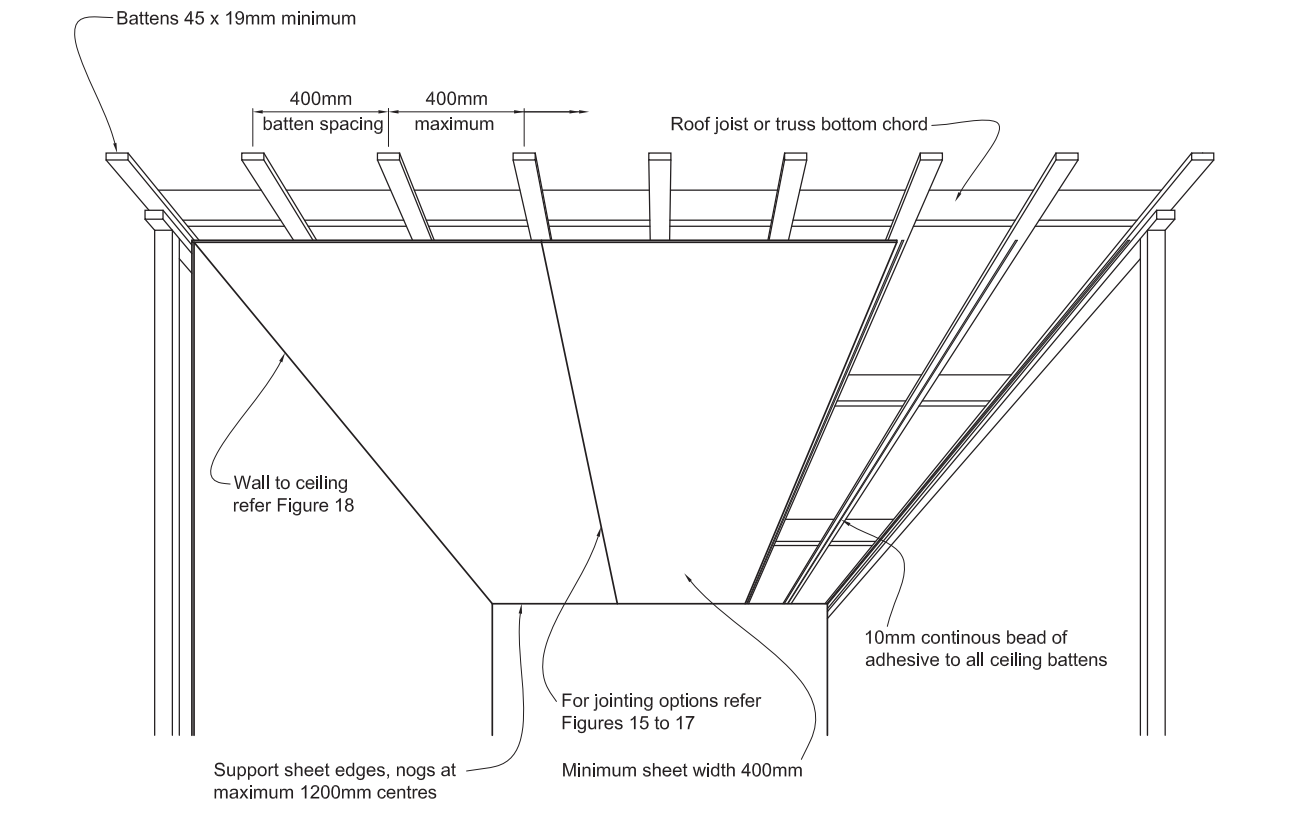

Note: This method requires the sheets to be fully braced temporarily while the adhesive cures (refer Figure 11). Bracing member should be aligned with the framing behind HardieGlaze Lining.

Figure 9: HardieGlaze Lining sheet fixing to ceilings and walls adhesive/fastfix method

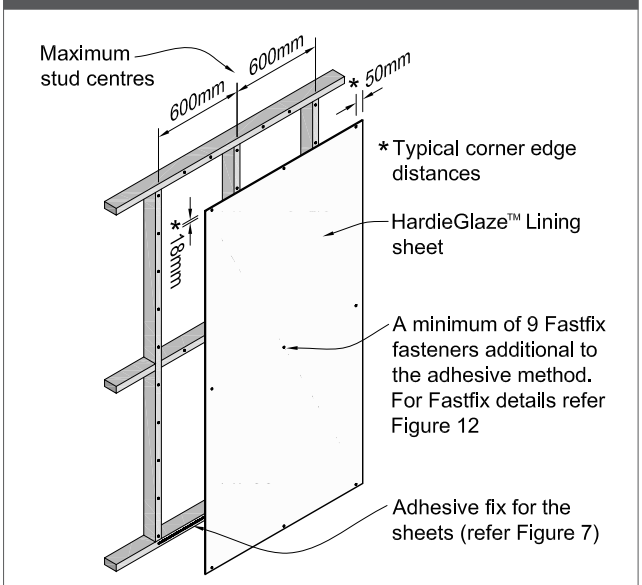

Note: For high impact areas extra nogs must be provided, or fix 6mm Villaboard Lining to the framing before installing HardieGlaze Lining.

Figure 10: HardieGlaze Lining sheet fixing to walls — tape and adhesive method

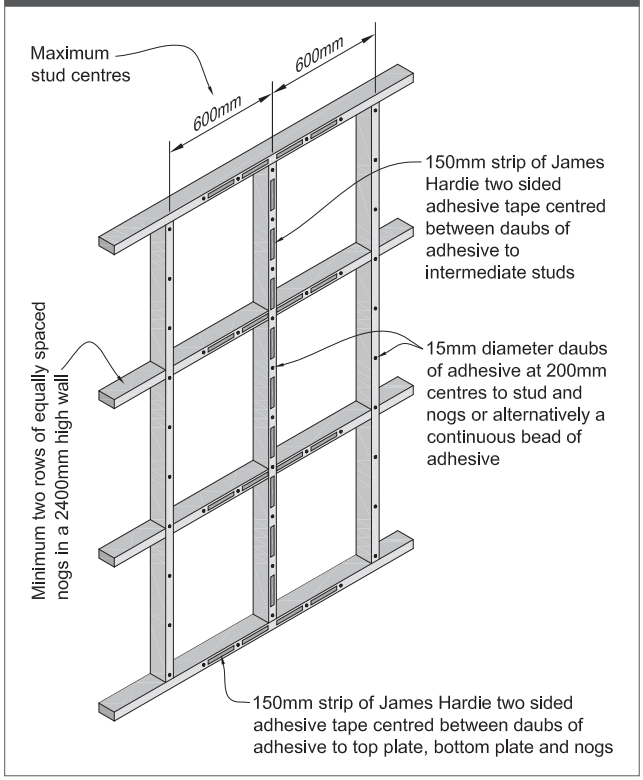

Figure 11: Temporary HardieGlaze Lining sheet bracing

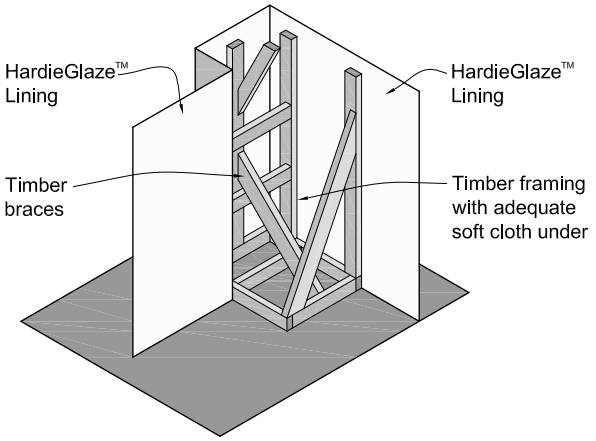

Note: Ensure edges are well braced and timber braces are aligned over solid framing behind

6.8 ADHESIVE/FASTFIX FIXING

This method uses adhesive as the main sheet fixing, combined with a minimum number of Fastfix fasteners to hold the sheet in place while the adhesive sets. This method is particularly suitable for ceilings where temporary bracing may be difficult (refer Figure 9).

Note: Temporary bracing must be applied to the sheet areas between the Fastfix fasteners, to avoid sag.

6.9 SHEET FIXING WITH FASTFIX ONLY

Sheets can be fixed with Fastfix fixing at 300mm centres to all framing for walls and ceilings (refer Figure 12). This method is a fully visible mechanical fixing method when adhesive fixing is not suitable. This detail is only suitable for walls in dry areas and ceilings in wet or dry areas.

Figure 12: HardieGlaze Lining fast fix fixing method

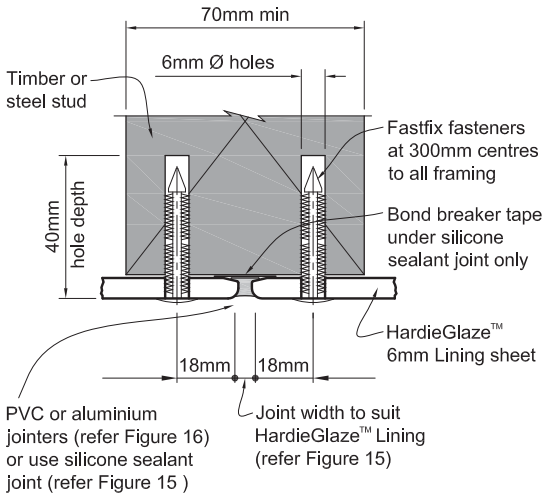

6.10 RAISED-HEAD SCREW-FIXING METHOD

6mm HardieGlaze Lining can be fixed with raised-head screws at 300mm centres to all framing (refer Figure 13). This method can be used when removable panels are required. This detail is only suitable for walls in dry areas and ceilings in wet or dry areas.

Figure 13: HardieGlaze Lining sealing strip screw method

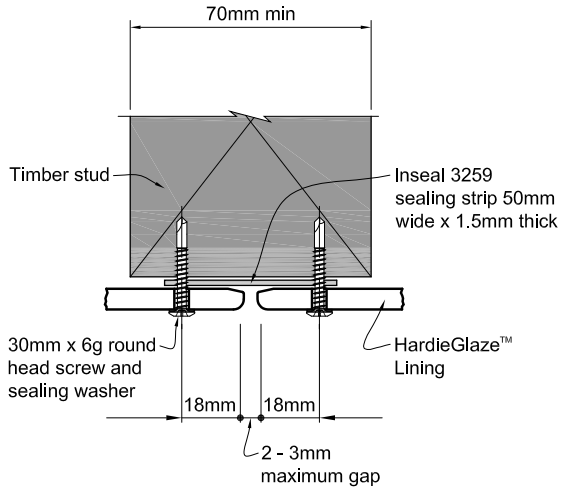

6.11 CERAMIC TILE INSERTS

Ceramic tile inserts can be placed in the 6mm HardieGlaze Lining to give contrast. Refer to Figure 14 for the tile insert detail. Inserts must be above the level of the shower rose (refer Figure 6).

Figure 14: Ceramic tile inserts into HardieGlaze Tile and Premium Lining detail

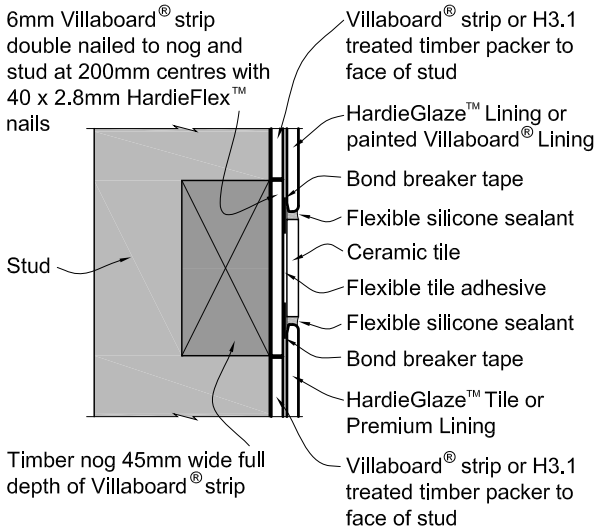

7 Jointing

7.1 SILICONE JOINTING PROCEDURES

This method of jointing applies to 6mm HardieGlaze Lining only which has factory radiused edges.

- Fix bondbreaker tape to the framing behind the joints before fixing sheets (refer Figure 15).
- Peel back the protective film from the sheet edge.
- Ensure the sheet edge is prepared for a silicone joint. The factory-painted, radiused sheet edge should be used for all flat joints. (refer Figure 15).
- For an internal corner place the site cut edges sand papered and well primed into corner first, then place factory finished edge 3-4mm from the face of the first sheet.
- Once the sheet edge is prepared, fit the first sheet on one side of the joint, fix a spacer in position at 300mm centres approximately, but do not nail fully in. Place the next sheet on the wall and firmly push onto the spacer to give the correct gap for the silicone joint (refer Figure 15).
- Temporarily brace the edges and centre of the sheet as required. Allow adhesive to be fully cured (as per manufacturer's instructions).

Accurately mask each side of the joint with the recommended masking tape. Refer Table 5. Incorrect tapes can cause coating removal.

- Prime the joint to be silicone sealed according to the manufacturer's instructions.
- Apply the silicone sealant, neatly finish and remove the masking tape only when all sealant operations are complete and whilst sealant is still wet.
- Do not touch silicone sealant with bare fingers as this can encourage mould growth. Use a plastic spoon, wear rubber gloves or cover finger with a plastic bag.

Figure 15: HardieGlaze Lining — silicone joint detail

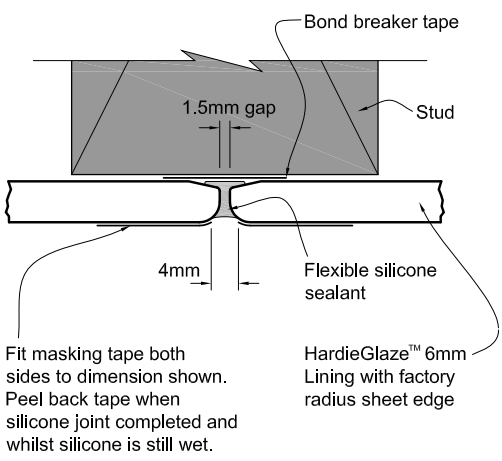

7.2 DRY AREA WALL JOINTS

Figure 16: HardieGlaze aluminium jointer detail dry area

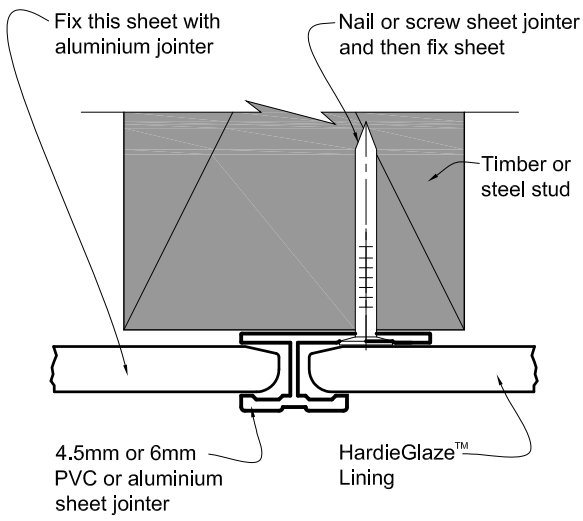

When using a cap mould, cut the vertical jointer shorter to suit.

Silicone joint detail as per Figure 15 is also suitable for dry area lining applications.

7.3 WET AREA WALL JOINTS

When the PVC or aluminium jointer method is used for wet area applications, ensure that all the sheet edges have been sealed into jointers with a silicone sealant (refer Figure 17).
When using a cap mould, cut the vertical jointer shorter to suit.

Fix mouldings at max 300 centres with nail or screw.

Around baths and showers:

- Around baths silicone detail to be used.
- For a stainless-steel shower installation it is essential that a drip edge is formed at the bottom of the sheet (refer Figure 21).

Penetrations:

- Seal all fittings and penetrations through HardieGlaze Lining with a silicone or similar sealant. Use flanges/face plates to cover the penetrations.
- Ensure that adequate moisture management is achieved for the details not covered in this manual. Refer to designer for the details.

Figure 17: HardieGlaze PVC or aluminium jointer detail

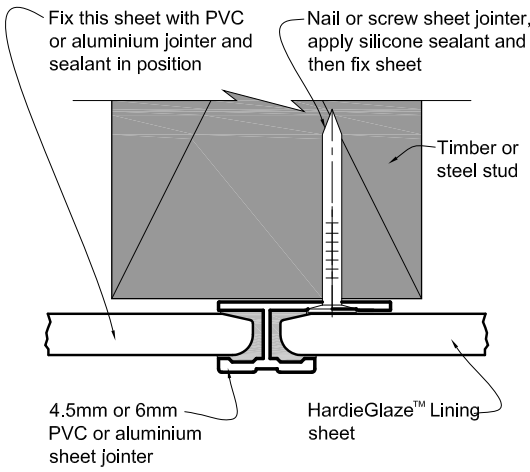

Note: For showers and similar wet areas the PVC or aluminium jointer must be silicone-sealant filled. External and internal corners and cap moulds must also be silicone filled in these wet areas.

7.4 EXTERNAL CORNER JOINTS

For 6mm HardieGlaze Lining there are two external jointing options:

- the external corner mould (refer page 6).
- silicone joint the radius edges. Ensure the entire radius edge is painted prior to silicone jointing.

For 4.5mm HardieGlaze Lining use the external corner mould (refer page 5).

7.5 INTERNAL CORNER JOINTS

For 6mm HardieGlaze Lining there are three internal jointing options:

- the flexible-edge 2-piece internal corner mould
- the internal corner mould (refer page 6).
- silicone joint — when a site cut sheet edge is used to form a corner, ensure the cut edge butts into the corner framing and the manufactured edge forms a gap to finish the silicone joint.

For 4.5mm HardieGlaze Lining use the internal corner mould (refer page 5).

7.6 WALL-TO-CEILING JOINTS

Use either a timber moulding, PVC or aluminium cap. Refer to Figure 18 for details.

Figure 18: HardieGlaze Lining ceiling scotia moulding alternatives

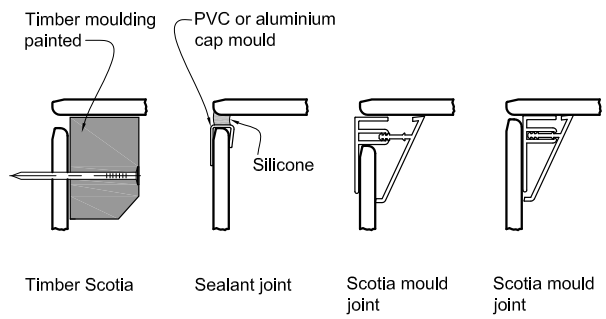

7.7 WET AREA WALL-TO-FLOOR JOINTS

For details of HardieGlaze Lining junction with a tiled floor, refer to Figure 22. For details of HardieGlaze Lining junction with a vinyl coved floor, refer to Figure 23.

Figure 19: HardieGlaze PVC bath/acrylic shower flashing detail

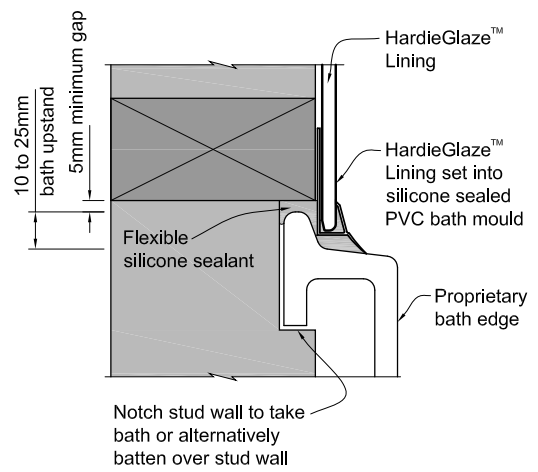

Note: Seal bottom edge and 100mm up back of sheet with Dulux Primercryl, Dulux Acraprime 501/1 or similar.

Figure 20: HardieGlaze Lining sealant bath/acrylic shower detail

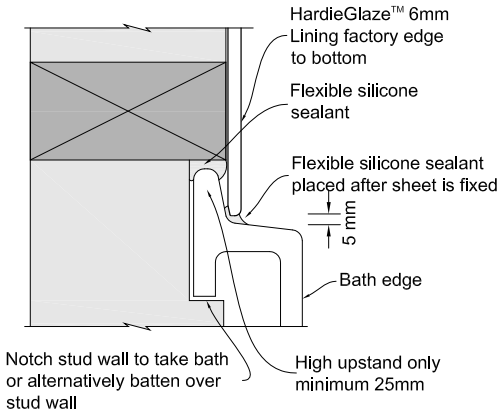

Notes:

1. This detail is suitable for high-upstand baths only.
2. Seal bottom edge and 100mm up back of sheet with Dulux Primercryl, Dulux Acraprime 501/1 or similar.
3. High-upstand acrylic shower bases can be finished to a similar detail.

Figure 21: HardieGlaze Lining shower drip edge detail

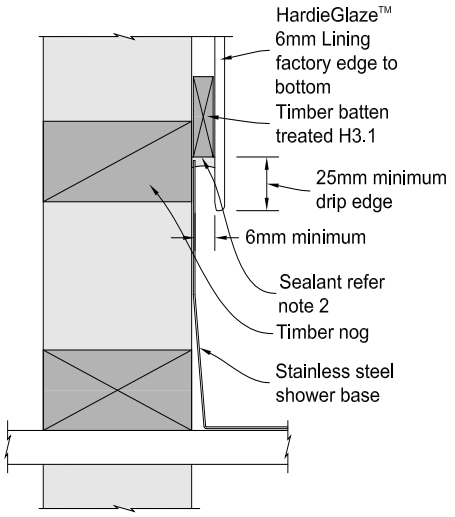

Notes:

1. The bottom edge and 100mm up the back face must be sealed with Dulux Primercryl, Dulux Acraprime 501/1 or similar.
2. It is important to use sealant here to prevent possible damage to the framing.
3. The shower tray can be notched into the stud to eliminate battening.

Figure 22: HardieGlaze Lining wall to tiled floor detail

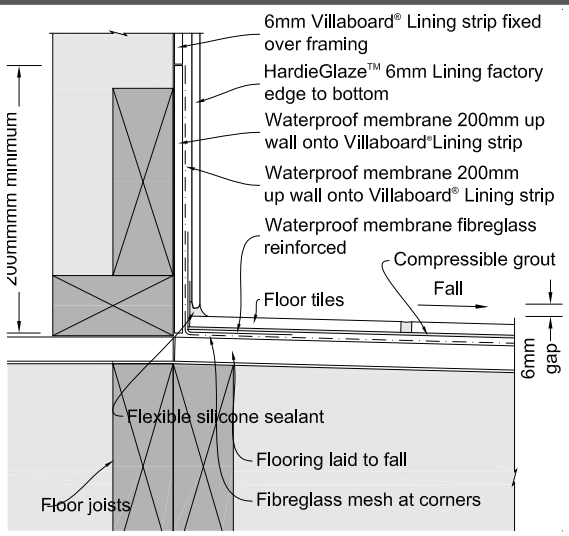

Notes:

1. HardiePanel™ Compressed floor to be laid with two directional falls to corner waste. Perimeter edge of waste hole must be a minimum of 50mm from edge of sheet or wall. Build up falls around waste hole before applying waterproof membrane.
2. Tiles to be laid prior to HardieGlaze Lining installation.
3. Seal bottom edge and 100mm up back of sheet with Dulux Primercryl, Dulux Acraprime 501/1 or similar.

Figure 23: HardieGlaze Lining wall to tiled floor and upstand detail

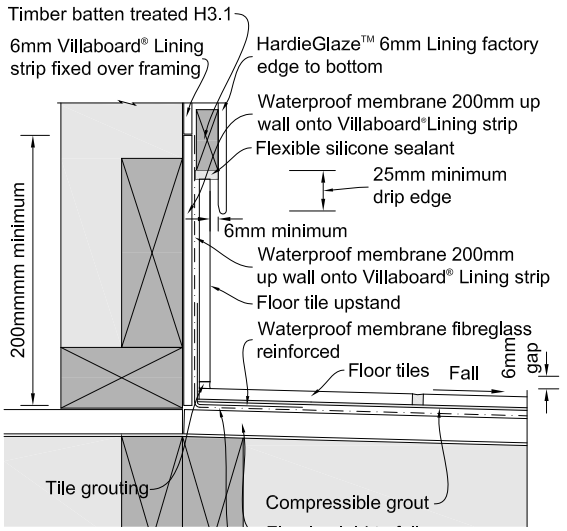

Notes:

1. HardiePanel™ Compressed floor to be laid with two directional falls to corner waste. Perimeter edge of waste hole must be a minimum of 50mm from edge of sheet or wall. Build up falls around waste hole before applying waterproof membrane.
2. Tiles to be laid prior to HardieGlaze Lining installation.
3. Seal bottom edge and 100mm up back of sheet with Dulux Primercryl, Dulux Acraprime 501/1 or similar.

8 Special applications

Figure 24: HardieGlaze Lining to coved vinyl floor detail

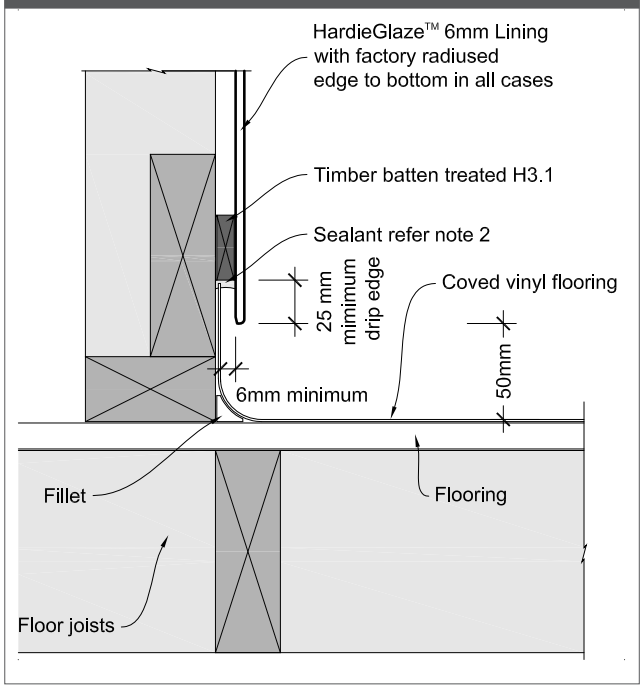

Sealant notes:

1. Cut edges must be site sealed with Dulux Primercryl, Dulux Acraprime 501/1 or similar before sealant is applied.
2. Silicone seal the joint. For full application instructions refer to the sealant manufacturer. Suitable sealants are listed in Table 5.
3. The silicone joint is suitable only for radiused-edge sheets — HardieGlaze Tile and Premium Lining. Do not touch silicone with a bare finger.

8.1 INDOOR SWIMMING POOL APPLICATION

A chlorine environment is not suitable for wallboard adhesives therefore when using HardieGlaze Lining in areas such as indoor swimming pool areas, check with the adhesive manufacturer regarding their suitability in this application or use stainless steel screws with cup washers. It is recommended that a higher level of timber treatment is used for timber framing in this environment and back of sheets must be fully sealed.

HardieGlaze Lining must be cleaned more frequently when used in a chlorine environment.

8.2 SPLASHBACK

HardieGlaze Lining can be used as a splashback. Minimum clearance of 200mm must be maintained from the closest outer ring of hob.

8.3 WET AREA PENETRATION

Figure 25: Wet wall caddy

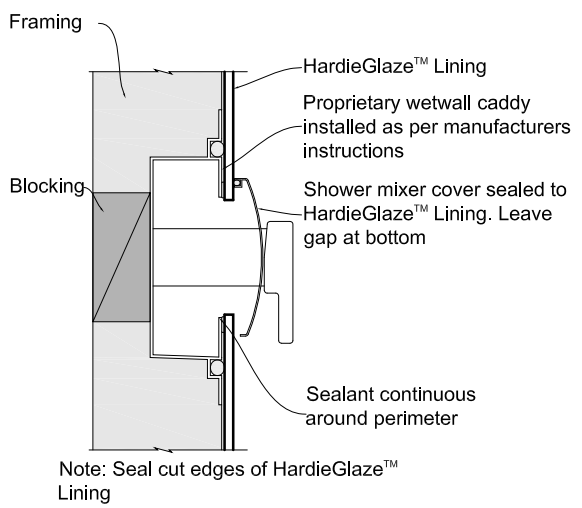

9 Product information

9.1 PRODUCT DESCRIPTION

HardieGlaze Lining is a pre-finished wall and ceiling lining for use in wet, semi-wet and dry areas.

HardieGlaze Lining is manufactured by James Hardie. The base sheets are a light grey colour. All sheets have the face side fully sanded to give a smooth finish, and are polyurethane coated. HardieGlaze Lining is also back sealed. The name 6.0 Base Sheet or 4.5 Base Sheet is printed across the back of all sheets at regular intervals. Additional identification is the name written on the sticker applied to back of lining. HardieGlaze Lining is for interior use only. It must not be used for external applications. The unique radiused, painted edge of HardieGlaze Tile and Premium Lining sheets mean they can be silicone jointed (refer Figures 15 and 16).

HardieGlaze Lining is manufactured to AS/NZS 2908.2 'Cellulose-Cement Products Part 2: Flat Sheets' (ISO 8336 'Fibre Cement Flat Sheets') standards in New Zealand. James Hardie New Zealand is an ISO 9001 'Telarc' certified manufacturer. HardieGlaze Lining is classified Type B, Category 3 in accordance with AS/NZ 2908.2 'Cellulose-Cement Products'.

For Safety Data Sheets (SDS) visit www.jameshardie.co.nz or Ask James Hardie on 0800 808 868.

9.2 PRODUCT APPLICATION

HardieGlaze Lining is a prefinished wall and ceiling lining suitable for the applications described in Table 6.

9.3 DURABILITY

Although HardieGlaze Lining is resistant to moisture, the product specification must be designed, installed and maintained to resist the penetration of moisture. HardieGlaze Lining installed as per this installation manual complies with 15 year durability requirement of the NZBC.

HardieGlaze Lining has demonstrated resistance to permanent moisture induced deterioration (rotting) by passing the following tests in accordance with AS/NZS 2908.2:

- Water permeability (Clause 8.2.2)
- Warm water (Clause 8.2.4)
- Heat rain (Clause 6.5)
- Soak dry (Clause 8.2.5)

9.4 SHEET PROPERTIES

The HardieGlaze Lining base sheet is:

- Extremely durable and will not rot or decay even under prolonged exposure to moisture and steam, provided the sheet edges are well sealed by the sealant or jointer method and regular drying cycles occur.
- Stable within the normal range of moisture and temperature changes. Regular drying cycles occur.
- Soft impact resistance.
- Non combustible material.
- Suitable for use in fire exitways.
- Easily cut and fixed.
- Contains silica (refer to Safe Working Practices pages 8 and 9).

The polyurethane coating is:

- Hard wearing and resistant to light scratching.
- Machine applied and requires minimum maintenance under normal conditions of use.
- Easy to clean.
- HardieGlaze Lining does not support mould growth. HardieGlaze Lining is ideal in conditions where there is moisture. However, wetting of the back of the sheet must be avoided as this will degrade the support framing and may eventually lead to the deterioration of HardieGlaze Lining.

9.5 SHEET MOISTURE CONTENT AND MASS

HardieGlaze Lining sheets vary in moisture content with the seasons. The approximate mass of HardieGlaze Lining sheets at equilibrium moisture content is:

4.5mm – 7kg/m^2

6mm – 9.5kg/m^2

9.6 FIRE PROPERTIES

Maximum service temperature for the HardieGlaze Lining is 60ºC.

HardieGlaze Lining sheet has been tested for heat release rate as per AS/NZS 3837 and the product has a Heat Release Rate below 50 kw/m^2.

HardieGlaze Lining has a 'Group Number' classification of 1-S as per the requirements of clause C of the NZBC.

10 Maintenance

10.1 GENERAL

HardieGlaze Lining is resistant to the damage from moisture, but still the sheet must be installed and maintained to resist the penetration of moisture. It is important that the sealants and jointers are prevented from any damage to ensure that water doesn't penetrate behind HardieGlaze Lining.

Regular inspections are required to determine whether any system components need replacing. Refer to cleaning recommendation in clause 10.2.

10.2 CLEANING PROCEDURES

Always use a non abrasive soft cloth to clean the sheet surface. Non-abrasive cleaning detergents can be used if needed.

HardieGlaze™
LINING

Product Warranty

April 2014

James Hardie New Zealand ("James Hardie") warrants to the first purchaser of the Product for a period of 15 years from the date of purchase that the HardieGlaze™ Lining (the "Product"), will be free from defects due to defective factory workmanship or materials and, subject to compliance with the conditions below, will be resistant to cracking, rotting, fire and damage from termite attacks to the extent set out in James Hardie's relevant published literature current at the time of installation. James Hardie warrants for a period of 15 years from the date of purchase that the accessories supplied by James Hardie to be used in conjunction with the Product will be free from defects due to defective factory workmanship or materials.

Nothing in this document shall exclude or modify any legal rights a customer may have under the Consumer Guarantees Act or otherwise which cannot be excluded or modified at law.

CONDITIONS OF WARRANTY:

The warranty is strictly subject to the following conditions:

a) James Hardie will not be liable for breach of warranty unless the claimant provides proof of purchase and makes a written claim either within 30 days after the defect would have become reasonably apparent or, if the defect was reasonably apparent prior to installation, then the claim must be made prior to installation;

b) this warranty is not transferable;

c) the Product must be installed and maintained strictly in accordance with the relevant James Hardie literature current at the time of installation and must be installed in conjunction with the components or products specified in the literature. To obtain copies of such literature please contact 'Ask James HardieTM 0800 808 868'. Further, all other products, including coating and jointing systems, applied to or used in conjunction with the Product must be applied or installed and maintained strictly in accordance with the relevant manufacturer's instructions and good trade practice;

d) the project must be designed and constructed in strict compliance with all relevant provisions of the current New Zealand Building Code ("NZBC"), regulations and standards;

e) the claimant's sole remedy for breach of warranty is (at James Hardie's option) that James Hardie will either supply replacement product, rectify the affected product or pay for the cost of the replacement or rectification of the affected product;

f) James Hardie will not be liable for any losses or damages (whether direct or indirect) including property damage or personal injury, consequential loss, economic loss or loss of profits, arising in contract or negligence or howsoever arising. Without limiting the foregoing James Hardie will not be liable for any claims, damages or defects arising from or in any way attributable to poor workmanship, poor design or detailing, settlement or structural movement and/or movement of materials to which the Product is attached, incorrect design of the structure, acts of God including but not limited to earthquakes, cyclones, floods or other severe weather conditions or unusual climatic conditions, efflorescence or performance of paint/coatings applied to the Product, normal wear and tear, growth of mould, mildew, fungi, bacteria, or any organism on any Product surface or Product (whether on the exposed or unexposed surfaces);

g) all warranties, conditions, liabilities and obligations other than those specified in this warranty are excluded to the fullest extent allowed by law;

h) if meeting a claim under this warranty involves re-coating of Products, there may be slight colour differences between the original and replacement Products due to the effects of weathering and variations in materials over time.

Disclaimer: The recommendations in James Hardie's literature are based on good building practice, but are not an exhaustive statement of all relevant information and are subject to conditions (c), (d), (f) and (g) above. James Hardie has tested the performance of HardieGlaze™ Lining when installed in accordance with the HardieGlaze™ Lining installation manual, in accordance with the standards and verification methods required by the NZBC and those test results demonstrate the product complies with the performance criteria established by the NZBC. However, as the successful performance of the relevant system depends on numerous factors outside the control of James Hardie (e.g. quality of workmanship and design) James Hardie shall not be liable for the recommendations made in its literature and the performance of the relevant system, including its suitability for any purpose or ability to satisfy the relevant provisions of the NZBC, regulations and standards, as it is the responsibility of the building designer to ensure that the details and recommendations provided in the relevant James Hardie installation manual are suitable for the intended project and that specific design is conducted where appropriate.

Copyright April 2014. © James Hardie New Zealand. TM and ® denotes a Trademark or Registered Mark owned by James Hardie Technology Limited.

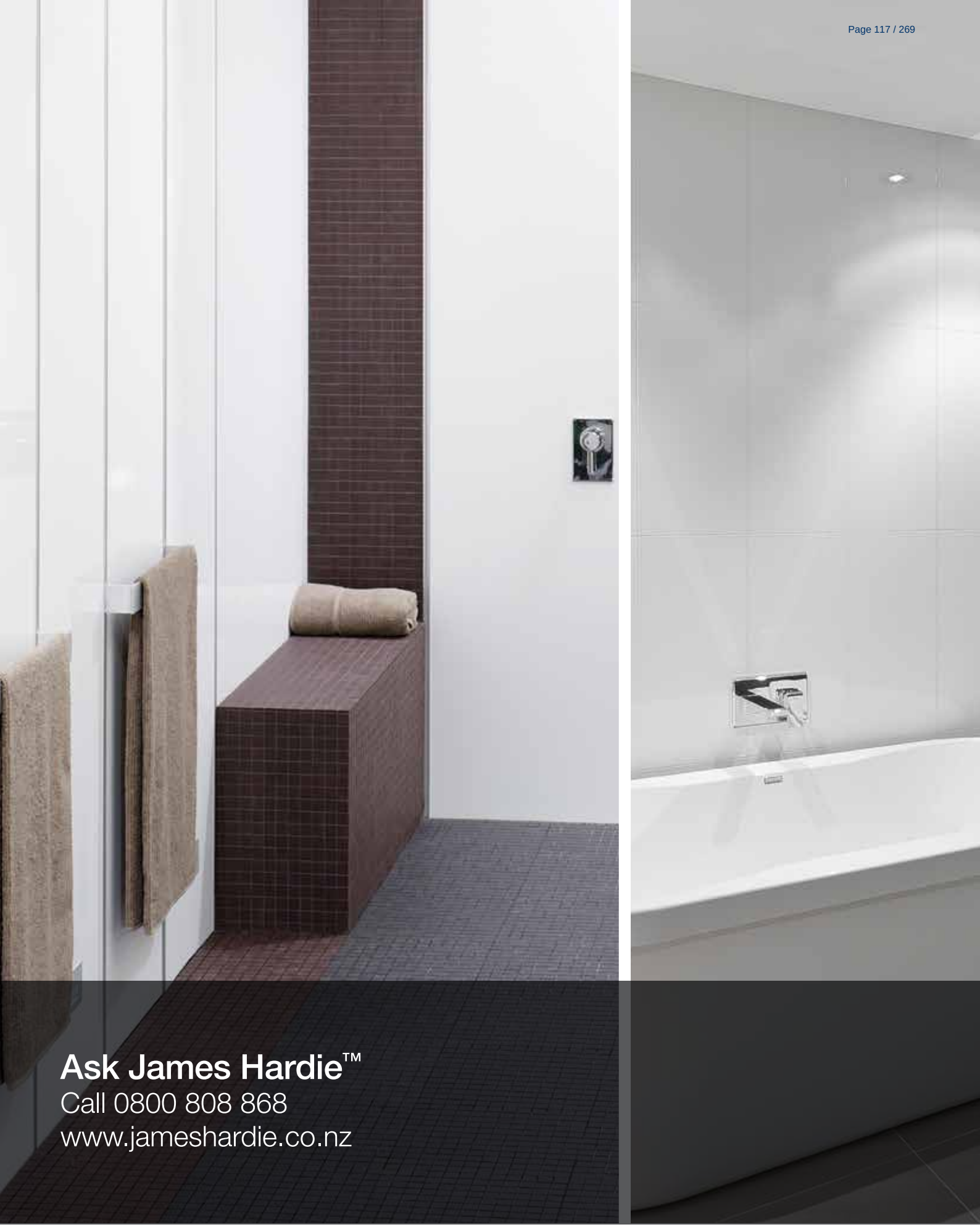

Ask James Hardie™

Call 0800 808 868

www.jameshardie.co.nz

Copyright April 2014. © James Hardie New Zealand. TM and ® denotes a Trademark or Registered Mark owned by James Hardie Technology Limited.

DESIGN DRAUGHTING SOLUTIONS

For all of your Draughting and Designing needs. LIMITED

Evan Russell
10 Eden Terrace
Kamo
Email info@designhomes.co.nz

Phone 0800 DDS LTD
0800 337 583
Mobile 021 757 174

Agent Authorisation Form

I Ereni Clark & R

owner of 866 Omamari Rd

1

Appoint: Design Draughting Solutions Ltd,

to act as my agent on behalf of and with authorisation from myself in regard to the Building and/or Resource Consent Application for above named property.

Owner Signature

Ereni Clark

Owner Name

5. Oct. 17

Date

14 November 2017

Ereni Clark

866 Omamari Road

Omamari 0373

Dear Ereni Clark,

Request for Further Information on PIM / BC Application

Reference Number: 170701

Project Location: 866 Omamari Road , Omamari

Project Description: Bathroom Renovation, Heat pump installation

This letter is to advise that we are in receipt of your application for a Project Information Memoranda (PIM) / building consent for the above project.

Our lodgement vetting process identifies that not all of the information required to accompany a PIM / Building Consent application as been provided. Until adequate information is provided the application cannot be formally received. Your application has been allocated a consent number, but is suspended until the list of further information listed below is provided.

You can restart this process and move your application to "formally received status" by submitting the following further information:

Deposit / Fee

1. Please arrange payment of the fee to complete the s45 lodgment process. The fee for the application is $1,140.00. Bank Details for internet banking are shown at the bottom of this letter. Please quote the reference number off the top of this letter in the particulars field.

My apologies if any of the above matters are already covered by the documents but have been overlooked.

Should you have any queries regarding this letter, please reply to this email or phone our Technical Administration Team on (09) 439 3123.

Yours sincerely,

Lissa Whiteman
Vetting
On behalf of: Kaipara District Council

Kaipara District Council Bank Details
BNZ Dargaville
02 0308 0090743 07

Project Information Memorandum 170701P

Section 34, Building Act 2004

Application

Owner	Ereni Clark	**Number**	170701P
	C/- Design Draughtins Solutions Ltd	**Issue Date**	28 November 2017
	10 Eden Tce	**Formally Received Date**	13 November 2017
	Kamo		
	Whangarei 0112		

Project

Description	Bathroom Renovation, Heat pump installation
Intended Life	50 years
Intended Use	2.0 Housing: 2.0.2 Detached Dwelling
Estimated Value	$10000.00
Location	866 Omamari Road , Omamari
Legal Description	LOT 1 DP 206909
Valuation Number	0099023742

Building work can proceed following formal notification of Building Consent Approval being received from the Kaipara District Council Building Consent Authority and approvals being obtained from the agencies identified in this project information memorandum.

This Project Information Memorandum does NOT constitute a Building Consent.

Heritage Status of the Building

Building work associated with this project will not be affecting land or structures that have Heritage Status. This project is exempt from the rules of the District Plan that relate to Heritage Buildings.

Notable Trees

Council is not aware of there being any notable trees associated with this site. Therefore the project is exempt from the rules of the District Plan that relate to Notable Trees.

Special Features of the Land Concerned

"Land concerned" means the land on which the proposed building work is to be carried out; and includes any other land likely to affect or be affected by the building work.

"Special feature of the land concerned" includes, without limitation, potential natural hazards, or the likely presence of hazardous contaminants, that -

a) are likely to be relevant to the design and construction or alteration of the building or proposed building; and

b) is known to the Territorial Authority; and

c) is not apparent from the District Plan under the Resource Management Act 1991.

There are no known Special Features of the land concerned - this includes potential natural hazards, or the likely presence of hazardous contaminants that is likely to be relevant to the design and construction or alteration of the building or proposed buildings; and that is known to the Territorial Authority; and that is not apparent from the District Plan under the Resource Management Act 1991.

Details of existing stormwater or wastewater systems that relate to the proposed building work

There are no known details of any existing storm water or wastewater utility systems that relate to the proposed building work, or are on or adjacent to the site of the proposed building work.

Other Information

Once a Building Consent is issued, the Council will follow up on building work not completed within two years of building consent issue.

A Building Consent lapses and is of no effect if the building work has not been started within 12 months of the date of issue.

If the building is public premises it may not be occupied until either a Code Compliance Certificate or Certificate for Public Use has been issued.

If the building is wholly or partly a dam, a Project Information Memorandum and Building Consent must be obtained from the regional authority.

The Northland Regional Council has a register of contaminated sites. Please contact them on 0800 002 004 if you suspect that your property may be contaminated e.g. historic timber treatment sites, service stations, landfill sites.

Please check your Certificate of Title for any encumbrances (such as easements, section 73 notice) before you make an application for a Building Consent.

All archaeological sites are protected under the provisions of the Historic Places Act 1993. If subsurface archaeological evidence (shell, midden, hangi, storage pits, etc) should be unearthed during construction, work should cease in the immediate vicinity of the remains and the Historic Places Trust should be contacted.

The proposed project complies with the District Plan zoning as it does meet the Rural Zone Rules.

Council has found that the site wind zone rating is high

The Council has found that the site exposure zone is zone C - Inland

Development Contributions do not apply to this project

Notes:

1. The information supplied in the sections of this PIM report is specific to the building project to which the application relates by reference to Council files and records. No property inspection, or title search, has been undertaken. To enable the Council to measure the accuracy of this PIM document based on our current records we would appreciate your response should you find any information contained herein which may be considered to be incorrect or omitted. Please telephone the Council (09) 439 3123.

2. The Council has used its best endeavors to ensure that all information provided in this PIM report is correct and complete in all material respects. In the event that a material error or omission can be proven the Council's liability, whether in contract or in tort shall be limited to the fee paid to Council to obtain this report.

3. This information reflects the Kaipara District Council's current understanding of information which is relevant to the project. This is based only on the information thus far provided to it and held on record. As a result the Council is not in a position to warrant that the information is complete or without error and accepts no liability for any inaccuracy in, or omission from, this information.

4. The information contained in this Project Information Memorandum is current at the date the memorandum is issued. Further relevant information may come into the Council's possession subsequent to the date of issue.

Building Consent - BC170701

Section 51, Building Act 2004

The Building

Street address of building: 866 Omamari Road , Omamari

Legal description of land where building is located: LOT 1 DP 206909

Building name:

Location of building within site/block number: 866 Omamari Road , Omamari

Level/unit number:

The Owner

Name of owner: Ereni Clark

Contact person: Ereni Clark

Mailing address: 866 Omamari Road , Omamari 0373

Street address/registered office: 866 Omamari Road , Omamari 0373

Phone number: Landline: 094396433 Mobile:

Facsimile number:

Email address:

First point of contact for communications with the council/building consent authority: Angela Russell

Building work

The following building work is authorised by this building consent:

Bathroom Renovation, Heat pump installation

This building consent is issued under section 51 of the Building Act 2004. This building consent does not relieve the owner of the building (or proposed building) of any duty or responsibility under any other Act relating to or affecting the building (or proposed

building).

This building consent also does not permit the construction, alteration, demolition, or removal of the building (or proposed building) if that construction, alteration, demolition, or removal would be in breach of any other Act.

Conditions

This building consent is subject to the following conditions:

Section 90 - Inspections by Building Consent Authorities

(1) Every building consent is subject to the condition that agents authorised by the building consent authority for the purposes of this section are entitled, at all times during normal working hours or while building work is being done, to inspectâ€”

(a) land on which building work is being or is proposed to be carried out; and

(b) building work that has been or is being carried out on or off the building site; and

(c) any building.

(2) The provisions (if any) that are endorsed on a building consent in relation to inspection during the carrying out of building work must be taken to include the provisions of this section.

(3) In this section, inspection means the taking of all reasonable steps to ensure that building work is being carried out in accordance with a building consent.

Endorsements

Electrical Energy Works Certificate: The Building Consent Authority places full reliance of the issue of Energy Work Certificates to verify that the installation and completion of electrical services comply with the provisions of New Zealand Building Code Clauses G9. Code Compliance Certificate will not be issued unless the Energy Works Certificates identifies compliance with this specific code clause and confirms compliance with this building consent.

Pressure Test Certificate: Upon completion of the building work the Plumber shall provide a Pressure Test Certificate to the owner to submit with their documentation for Code Compliance Certificate application.

Inspections

The following inspections are required:

- Framing / Pre-wrap
- Final

Documents Required

- Form 6A - LBP Record of Building Work
- Form 6 - Application for Code Compliance Certificate
- E3 - Internal Waterproofing Membrane Product & Installer Warranties
- G9 - Energy Works Certificate
- G12 - Water Supplies - Pipework Pressure Test Documentation

Construction Monitoring Requirements

Please contact the following consultants directly to arrange the construction monitoring identified which they have been engaged to carry out.

Installer of Tarkett Vinyl
Installer is to be a Jacobsen's approved applicator

Copies of all site reports/records must be provided to the BCA as work proceeds for their records, please forward these to 170701@kdc.abcs.co.nz referencing the BC number.

Compliance Schedule

A compliance schedule is not required for the building.

Attachments

Copies of the following documents are attached to this building consent:

Project Information Memorandum (PIM): 170701P

J. D. Nikora

Jamie Nikora

Building Control Officer

On behalf of: Kaipara District Council

Issue Date: 15 December 2017

ADDENDA TO THIS BUILDING CONSENT:

- This building consent will lapse and be of no effect if the building work to which it relates does not commence within 12 months after the date of issue. The consent may be extended for any further period at the discretion of council.
- No deviation or alteration from the original plans and specifications can be carried out without written approval of Council and no building may be converted to any other use other than that stated on the building consent.
- IMPORTANT: YOU ARE FULLY RESPONSIBLE FOR ANY DAMAGE DONE TO ANY WORKS SUCH AS TELEPHONE CABLES, POWER CABLES, WATER MAINS, GAS MAINS, SEWERS, PIPES, FOOTPATHS, ROADS OR OTHER SERVICES.
- As the property owner is responsible for the correct siting of all works in accordance with the NZ Building Code and the Resource Management Act, the owner must ascertain the true position of the survey pegs before work commences.
- NOTICE THAT BUILDING WORK IS READY FOR INSPECTION. For the purposes of Section 222 of the Building Act 2004, and unless otherwise provided by the building consent, the owner or other person undertaking any building work shall give:
- At least 2 working days notice of the covering up of any
- i) drainage or plumbing
- ii) excavation for a foundation
- iii) reinforcing steel for a foundation
- iv) timber required to have a specific moisture content
- v) other work required to give notice as a condition
- Council MUST be notified at the completion of building work on the attached form.
- Every household unit requires smoke alarms in accordance with NZBC Clause F7/AS 1.3.1. Smoke alarms may be battery powered but shall have a hush facility and must comply with at least one of the following: UL 217, CAN/ULC S531, AS 3786, BS 5446: Part 1. Smoke alarms shall be installed near the ceiling and located on escape routes, in every sleeping space or within 3.0m of every sleeping space door.
- A Compliance Schedule is NOT required for the building.

BUILDING CONSENT FEES:

Please note that further fees may be required to be paid before a Code Compliance Certificate is issued for this Building Consent. All fees must be paid before a Code Compliance Certificate will be issued.

Project Information Memorandum 170701P

Section 34, Building Act 2004

Application

Owner	Ereni Clark	**Number**	170701P
	C/- Design Draughtins Solutions Ltd	**Issue Date**	28 November 2017
	10 Eden Tce	**Formally Received Date**	13 November 2017
	Kamo		
	Whangarei 0112		

Project

Description	Bathroom Renovation, Heat pump installation
Intended Life	50 years
Intended Use	2.0 Housing: 2.0.2 Detached Dwelling
Estimated Value	$10000.00
Location	866 Omamari Road , Omamari
Legal Description	LOT 1 DP 206909
Valuation Number	0099023742

Building work can proceed following formal notification of Building Consent Approval being received from the Kaipara District Council Building Consent Authority and approvals being obtained from the agencies identified in this project information memorandum.

This Project Information Memorandum does NOT constitute a Building Consent.

Heritage Status of the Building

Building work associated with this project will not be affecting land or structures that have Heritage Status. This project is exempt from the rules of the District Plan that relate to Heritage Buildings.

Notable Trees

Council is not aware of there being any notable trees associated with this site. Therefore the project is exempt from the rules of the District Plan that relate to Notable Trees.

Special Features of the Land Concerned

"Land concerned" means the land on which the proposed building work is to be carried out; and includes any other land likely to affect or be affected by the building work.

"Special feature of the land concerned" includes, without limitation, potential natural hazards, or the likely presence of hazardous contaminants, that -

a) are likely to be relevant to the design and construction or alteration of the building or proposed building; and

b) is known to the Territorial Authority; and

c) is not apparent from the District Plan under the Resource Management Act 1991.

There are no known Special Features of the land concerned - this includes potential natural hazards, or the likely presence of hazardous contaminants that is likely to be relevant to the design and construction or alteration of the building or proposed buildings; and that is known to the Territorial Authority; and that is not apparent from the District Plan under the Resource Management Act 1991.

Details of existing stormwater or wastewater systems that relate to the proposed building work

There are no known details of any existing storm water or wastewater utility systems that relate to the proposed building work, or are on or adjacent to the site of the proposed building work.

Other Information

Once a Building Consent is issued, the Council will follow up on building work not completed within two years of building consent issue.

A Building Consent lapses and is of no effect if the building work has not been started within 12 months of the date of issue.

If the building is public premises it may not be occupied until either a Code Compliance Certificate or Certificate for Public Use has been issued.

If the building is wholly or partly a dam, a Project Information Memorandum and Building Consent must be obtained from the regional authority.

The Northland Regional Council has a register of contaminated sites. Please contact them on 0800 002 004 if you suspect that your property may be contaminated e.g. historic timber treatment sites, service stations, landfill sites.

Please check your Certificate of Title for any encumbrances (such as easements, section 73 notice) before you make an application for a Building Consent.

All archaeological sites are protected under the provisions of the Historic Places Act 1993. If subsurface archaeological evidence (shell, midden, hangi, storage pits, etc) should be unearthed during construction, work should cease in the immediate vicinity of the remains and the Historic Places Trust should be contacted.

The proposed project complies with the District Plan zoning as it does meet the Rural Zone Rules.

Council has found that the site wind zone rating is high

The Council has found that the site exposure zone is zone C - Inland

Development Contributions do not apply to this project

Notes:

1. The information supplied in the sections of this PIM report is specific to the building project to which the application relates by reference to Council files and records. No property inspection, or title search, has been undertaken. To enable the Council to measure the accuracy of this PIM document based on our current records we would appreciate your response should you find any information contained herein which may be considered to be incorrect or omitted. Please telephone the Council (09) 439 3123.

2. The Council has used its best endeavors to ensure that all information provided in this PIM report is correct and complete in all material respects. In the event that a material error or omission can be proven the Council's liability, whether in contract or in tort shall be limited to the fee paid to Council to obtain this report.

3. This information reflects the Kaipara District Council's current understanding of information which is relevant to the project. This is based only on the information thus far provided to it and held on record. As a result the Council is not in a position to warrant that the information is complete or without error and accepts no liability for any inaccuracy in, or omission from, this information.

4. The information contained in this Project Information Memorandum is current at the date the memorandum is issued. Further relevant information may come into the Council's possession subsequent to the date of issue.

KDC - Approved Building Consent Document - BC170701 - Pg 1 of 10 - 15/12/2017 - kjn

Kaipara te Oranganui
KAIPARA DISTRICT
Two Oceans Two Harbours

Approved Building Consent Documents

Please note: A copy of the stamped, approved documents must be available onsite for **all** inspections.

PROPOSED RESIDENTIAL ALTERATION

Project facilitated by

accessable
ENVIRONMENTAL HEALTH MANAGEMENT SERVICES

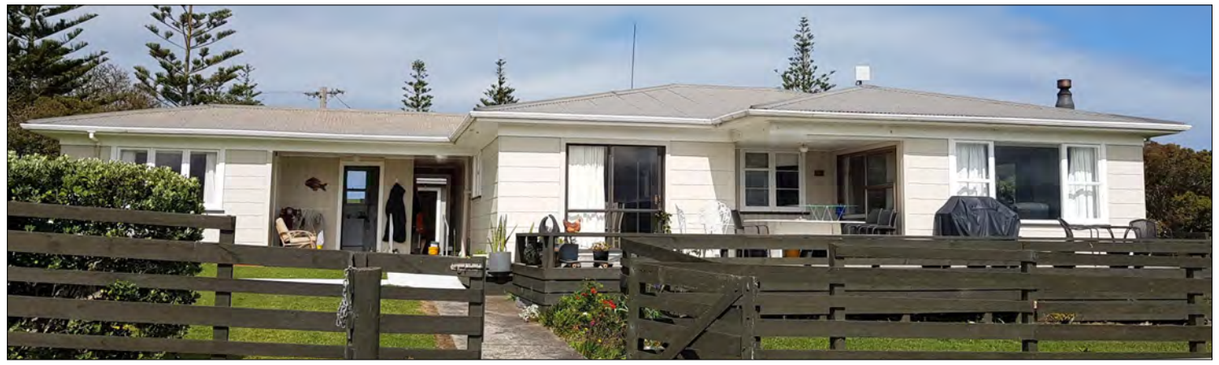

866 Omamari Rd

Dargaville

LOT 1 DP 206909

KDC - Approved Building Consent Document - BC170701 - Pg 2 of 10 - 15/12/2017 - kjn

Drawing Index

1 Cover Page
2 Floorplan - Existing / Proposed
3 Proposed New Floorplan
4 Proposed Bathroom Layout
5 Bathroom Elevation 1
6 Bathroom Elevation 2
7 Bathroom Elevation 3
8 Bathroom Elevation 4
9 Wet Area Details

PRELIMINARY TENDER SET

DESIGN DRAUGHTING SOLUTIONS LIMITED
For all of your Draughting and Designing needs.
info@designhomes.co.nz PH 09 435 3390 10 Eden Tce, Kamo, Whangarei

office job no. B448

866 Omamari Rd
Dargaville .

ACC funded accessible home modification on behalf of:
accessable completed by Design Draughting Solutions Ltd,

accessable
ENVIRONMENTAL HEALTH MANAGEMENT SERVICES

issue	date	drawn	revision notes
1	19/10/17		TDS
2	07/11/17	Evan Russell	BC ISSUE

job no. B448

Cover Page

A3 Set.. Page No. 1

DRAWINGS + DOCUMENTATION REMAIN THE PROPERTY OF ACCESSABLE | DO NOT SCALE OFF DRAWINGS | CONTRACTOR MUST CHECK + VERIFY DISCREPENCIES, DIMENSIONS + LEVELS ON SITE PRIOR TO COMMENCING WORK | DRAWINGS ARE INDICATIVE ONLY OF WORK TO BE DONE + ARE TO BE READ IN CONJUNCTION WITH SPECIFICATION + PRODUCT LITERATURE | ALL WORK TO COMPLY WITH RELEVANT STANDARDS

Legend:

- Existing Walls
- Walls to be Removed
- Smoke Alarm minimum requirement
- * Exempt Works under Schedule 1 of the Building Act 2004

KDC - Approved Building Consent Document - BC170701 - Pg 3 of 10 - 15/12/2017 - kjn

GENERAL DEMOLITION NOTES:

1. Contractor to visit site during tendering to confirm exact scope of demolition works.
2. It is the responsibility of the Contractor to identify all demolition work for all trades and allow for their removal.
3. Remove and/or demolish elements means to demolish and clear off site completely.
4. Refer to all other drawings in Contract Documents to establish scope of demolition.
5. This drawing to be read in conjunction with the relevant clauses of the Specification.
6. Support all existing works as required during demolition.
7. Maintain weather tightness and security of building during demolition.
8. Notify Design Draughting Solutions Ltd. immediately if Borer is discovered.
9. Notify Design Draughting Solutions Ltd. immediately if timber rot is discovered.
10. Notify Design Draughting Solutions Ltd and WorkSafe, immediately if Asbestos is discovered.
11. Allow to salvage Items being removed to return to owner if requested

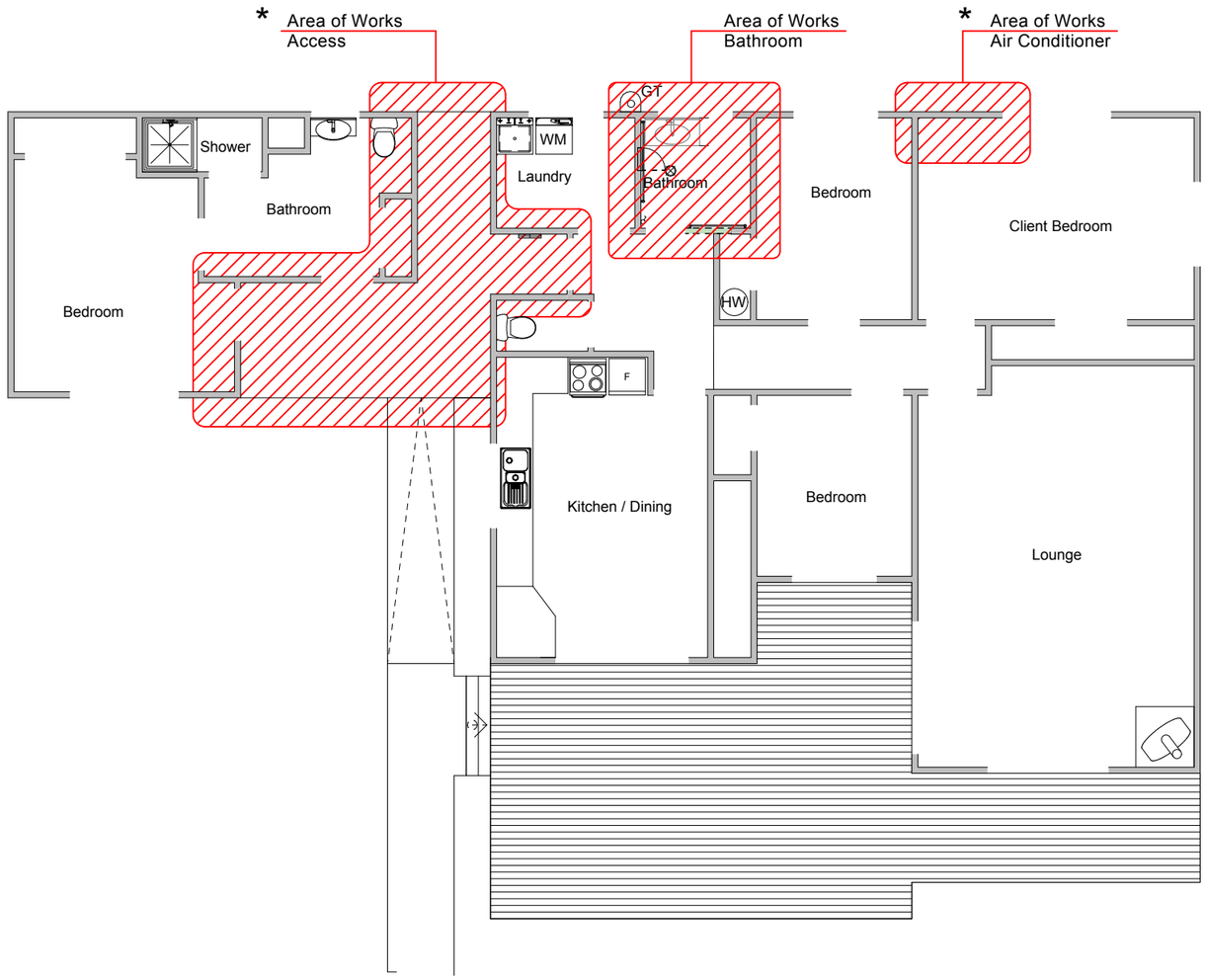

1 Existing Layout 1:100

PRELIMINARY TENDER SET

DESIGN DRAUGHTING SOLUTIONS LTD
For all of your Draughting and Design Needs
info@designhomes.co.nz PH 09 435 3390 10 Eden Tce, Kamo, Whangarei

office job no. B448
866 Omamari Rd
Dargaville .

ACC funded accessible home modification on behalf of:
accessable completed by Design Draughting Solutions Ltd,

accessable ENVIRONMENTAL HEALTH MANAGEMENT SERVICES

issue	date	drawn	revision notes
1	19/10/17		TDS
2	07/11/17	Evan Russell	BC ISSUE

job no. B448
Floorplan - Existing / Proposed
A3 Set.. Page No. 2

DRAWINGS + DOCUMENTATION REMAIN THE PROPERTY OF ACCESSABLE | DO NOT SCALE OFF DRAWINGS | CONTRACTOR MUST CHECK + VERIFY DISCREPENCIES, DIMENSIONS + LEVELS ON SITE PRIOR TO COMMENCING WORK | DRAWINGS ARE INDICATIVE ONLY OF WORK TO BE DONE + ARE TO BE READ IN CONJUNCTION WITH SPECIFICATION + PRODUCT LITERATURE | ALL WORK TO COMPLY WITH RELEVANT STANDARDS

Legend:

- Existing Walls
- Proposed New Walls
- Smoke Alarm minimum requirement
- * Exempt Works under Schedule 1 of the Building Act 2004

GENERAL NOTES:

Existing site and house plans are indicative only and are solely intended for the use of this modification only.
All work shall comply with the Building Code and all relevant city council by laws, NZS 3604: 2011 and all relevant standards.

Exempt Works - All items marked as Exempt Works under Schedule 1 of the Building Act 2004, are not requiring Council Consent / Inspection, but must be part of Tender as is works required of Builders / Contractors.

Builder to Check and Verify all Materials Prior to Construction or Purchase, for the Compatibility of such to Ensure the Installation is Correct as per Manufacturers Instructions.

Builder to verify Manufacturers specifications as All Details are Indicative Only and do not Supercede Manufacturers Instructions and/or Installation procedure

Reinstatement of Existing Fixtures - Any fixtures tagged to be removed then reinstated, contractor is to allow to apply for a variation to replace such fixtures in the event that an item is damaged on removal, or if the item is significantly deteriorated and cannot be reinstated.

Electrical Supply - The present status of the electric distribution board in the house and wiring to the project area shall be reviewed for NZBC and NZS 3000 compliance. If not it must be upgraded to comply with all the relevant NZBC codes and Standards. RCD devices are to be installed on all projects where new electric supply or switching is proposed also any existing devices that are in or surrounding a wet area/zone that we are modifying shall also be upgraded to include RCD.

Smoke detectors - Smoke detectors must be installed to comply with NZBC F7/AS1, if not already in place.

Proposed Plumbing drainage - services to be connected to existing waste pipes, reconfigure traps to suit. As per Part 2 of Schedule 1 of the NZ Building Act. unless stated otherwise.

Bathroom modifications

1. Where a bathroom wall is removed between bathroom and WC or other room to make a larger bathroom that the entire ceiling is replaced with Gib aqualine
2. Existing Windows Builder is to ensure the glazing in the bathroom is to be Obscured "A" grade Safety Glass Installed into Existing Frames, in accordance with NZS 4223 Part 3 1999, allow to replace.
3. Tempering devices must be installed on all projects with new shower facilities if they are not present, new tempering device to comply with NZBC G12/AS1 Paragraph 6.14.2 a) and NZS 4617 or AS 1357.2.
4. When installing new shower mixer, ensure mixer is suitable for existing/proposed water system ie: for all low pressure supply systems a flow test must be taken before and after the modifications and no reduction in flow is allowed. All tapware & mixers supplied & installed by the contractor must suit the clients existing water system. If for any reason this cannot be achieved, DDS Ltd is to be notified immediately by the contractor.
5. Builder is to ensure and confirm that the existing lights are suitable for a Wet room having a minimum rating of 'IP14' allow to replace to suit
6. Contractor to install 2/290x45 solid nogging behind Shower area to allow for placement of fixtures such as handrails etc to be installed at a height to match other rails, unless stated otherwise.
7. Contractor to install seismic restraint to existing HWC if not already installed

Doorway Modification - Where a doorway is modified in a timber framed plasterboard wall that -

1. Where the wall is painted that the entire wall is painted finishing at corners of opposing walls.
2. Where the wall is wall papered that all 4 walls are re wallpapered for consistency.

Make good all damaged or disturbed areas caused by new works.

KPBC Approved Building Consent Document - 1-2017-1018-1 - 15/12/20

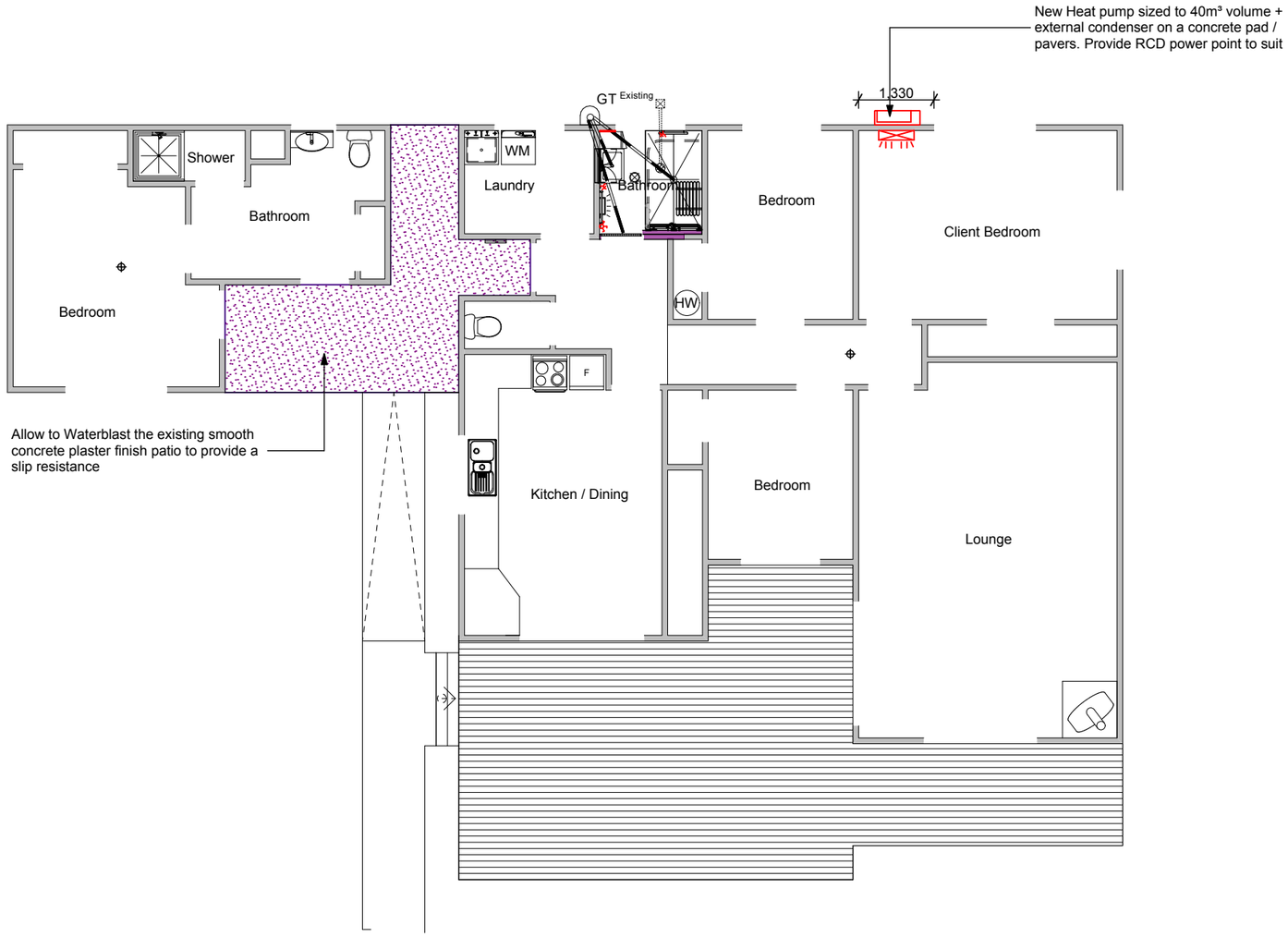

1 Proposed Modifications 1:100

PRELIMINARY TENDER SET

DESIGN DRAUGHTING SOLUTIONS LTD
For all of your Draughting and Design Needs
info@designhomes.co.nz PH 09 435 3390 10 Eden Tce, Kamo, Whangarei

office job no. B448
866 Omamari Rd
Dargaville .

ACC funded accessible home modification on behalf of:
accessable completed by Design Draughting Solutions Ltd,

accessable ENVIRONMENTAL HEALTH MANAGEMENT SERVICES

issue	date	drawn	revision notes
1	19/10/17		TDS
2	07/11/17	Evan Russell	BC ISSUE

job no. B448
Proposed New Floorplan
A3 Set.. Page No. 3

DRAWINGS + DOCUMENTATION REMAIN THE PROPERTY OF ACCESSABLE | DO NOT SCALE OFF DRAWINGS | CONTRACTOR MUST CHECK + VERIFY DISCREPENCIES, DIMENSIONS + LEVELS ON SITE PRIOR TO COMMENCING WORK | DRAWINGS ARE INDICATIVE ONLY OF WORK TO BE DONE + ARE TO BE READ IN CONJUNCTION WITH SPECIFICATION + PRODUCT LITERATURE | ALL WORK TO COMPLY WITH RELEVANT STANDARDS

Legend:

- Existing Walls
- Proposed New Walls
- Smoke Alarm minimum requirement
- * Exempt Works under Schedule 1 of the Building Act 2004
- Line indicates Tarkett wet wall linings "Protectwall" 1.5mm - Installed as per manufacturers instructions. onto New Aqua Gib.

Fan Heater	Goldair Heater GBH 250 Wall mounted Fan Heater set 2.0m High, Power supply switch set at 1200mm from FL level.
Heated Towel Rail	Goldair 5 Bar Ladder Rail 50 watts Stainless Steel - SKU: 165850 Model: GLTR5C. (630mm wide x 570mm High) Supplied from Mitre 10
Towel Rail	Miles Nelson 025 19mmØ. Towel rail tubing with 107 End Flanges, Length to suit. (Sourced from Bunnings Warehouse)

Hot Water Cylinder:

1 Fix Seismic restraints to the existing cylinder Plus Tempering Valves, as required as per NZBC requirements. Plumber to check.
2 Plumber to verify if existing water pressure is adequate for the proposed works and quote separately (with Tender) if additional works is required to allow adequate pressure.
3 It is the contractors responsibility to ensure the water pressure is no worse after the modification than before the modification.

1 Tarkett wet wall linings "Protectwall" 1.5mm

2 Paint All Walls (within works) plus Ceiling to match the existing

3 Allow to replace the existing ceiling + replace insulation if present where internal walls have been removed

4 Door removal of the existing Block with new Studs and line with New Gib wall linings Make good both sides (Wall paper / Paint to match the existing)

Note//
- Cold water medium pressure
- Hot water Low pressure (requires mitigation by Plumber for New shower)

KDC - Approved Building Consent Document - BC170701 - Pg 5 of 15 - 15/12/2017 - kjn

Bathroom Fixtures and fittings

Wet Area Shower	1050x1750 Formed Wet Area Shower. Cut into existing floor joists + Formed fall to central drainage point set 1:50 min. Gradent fall below Floor Level.
Floor Waste (Vinyl)	Allproof Revolver Easyclean Waste, REVCPV 50mm, with clamping ring and chrome grate installed as per manufacturers instructions
Shower Head + Slide	Superquip SS Slide Shower Safety Ø32mm T-Rail configuration, 900mm Long. Set 1100mm above FL, installed as per manufacturers instructions. Include a hand held rose and a shower hose at 1.5m long installed and Set low. Fix rail to solid nogs/studs centre
Shower Mixer	Felton Reflex Shower Mixer. Set 900mm above floor level. Builder / Plumber is to confirm suitability and type before instalment
Shower Curtain + Rail	'Watertight Down-Under' 2m min length weighted drop curtain + over head track. Set track to allow 300mm gap above and bottom edge to touch floor level. Allow for custom made length if required depending on existing ceiling height. Colour to owners selection
Towel Rail	Superquip 600mm wide to be installed as a towel rail, set at 1.0m from floor level. Install onto solid nogging/studs Code : 030/304HD600
Shower Caddie	Proprietary Shower caddie installed with suction cups
Shower Seat	New 600mm wide Folding shower seat with fold down legs. SuperQuip Code 077/304/600PL/LEGS Ensure Solid nogging + set at 450mm AFL. Install 2/290x45 x 2 Solid nogging for seat support.
Wet Area Linings	Tarkett wet wall linings "Protectwall" 1.5mm - Installed as per manufacturers instructions. onto New Aqua Gib. New wet wall lining Colour to owners specification
Floor Covering/Lining	Install Slip resistant Tarkett Granite Safe-T flooring with 200mm coved up stand. Colour to be selected by Owner / Client. Note// details supplied does not superceed the manufacturers instructions. Installer is to be a Jacobsen's approved applicator
Vanity / Basin	New Proposed Ceraform 600w Galaxy wall hung vanity. Complete with a SS. Bottle trap. Basin set 850mm AFL.
Vanity / Basin Mixer	Single lever Basin mixer Tap - 'Foreno Mana' Code MN02C - Supplied by Mitre 10
Wall Tower	Ceraform Wall Hung Mini Tower (850H x 300W x 400mmD) Set height to suit client under the existing window.
Recessed Mirrored Cabinet	St Michael Dante Plus 600.mirrored cabinet Code - "88101-W"
Ceiling Extractor Fan	Selected in line ventilation. Manrose / Simx in line fan 100mm MFP100F 69l/s,250m3/hr, to be Vented through Soffit. Order number # FAN2049 (or alternative to better suit this application)

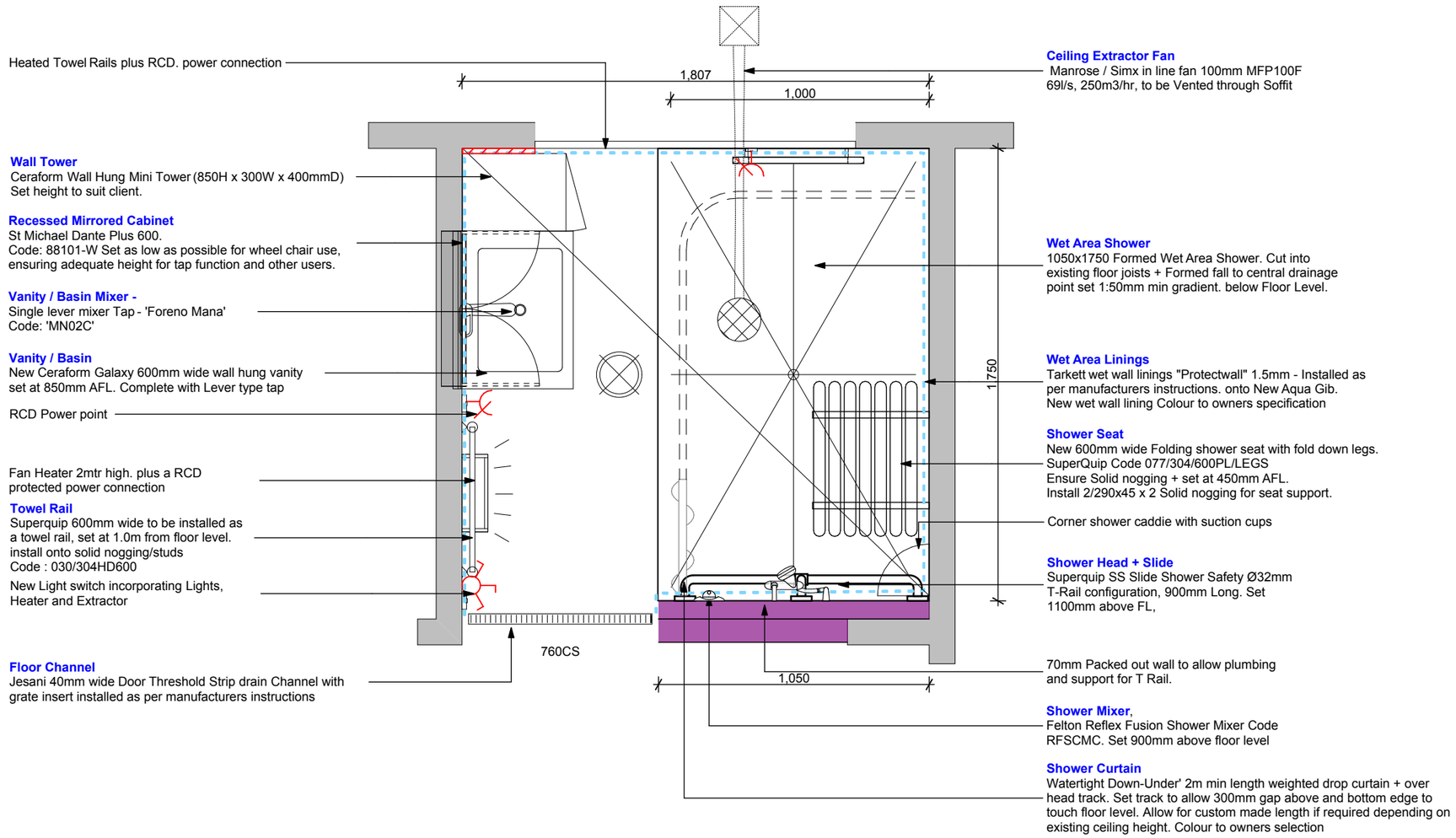

1 Proposed Bathroom 1:20

PRELIMINARY TENDER SET

DESIGN DRAUGHTING SOLUTIONS LTD
For all of your Draughting and Design Needs
info@designhomes.co.nz PH 09 435 3390 10 Eden Tce, Kamo, Whangarei

office job no. B448
866 Omamari Rd
Dargaville .

ACC funded accessible home modification on behalf of:
accessable completed by Design Draughting Solutions Ltd,

accessable ENVIRONMENTAL HEALTH MANAGEMENT SERVICES

issue	date	drawn	revision notes
1	19/10/17		TDS
2	07/11/17	Evan Russell	BC ISSUE

job no. B448
Proposed Bathroom Layout
A3 Set.. Page No. 4

DRAWINGS + DOCUMENTATION REMAIN THE PROPERTY OF ACCESSABLE | DO NOT SCALE OFF DRAWINGS | CONTRACTOR MUST CHECK + VERIFY DISCREPENCIES, DIMENSIONS + LEVELS ON SITE PRIOR TO COMMENCING WORK | DRAWINGS ARE INDICATIVE ONLY OF WORK TO BE DONE + ARE TO BE READ IN CONJUNCTION WITH SPECIFICATION + PRODUCT LITERATURE | ALL WORK TO COMPLY WITH RELEVANT STANDARDS

KDC - Approved Building Consent Document - BC170701 - Pg 6 of 10 - 15/12/2017 - kjn

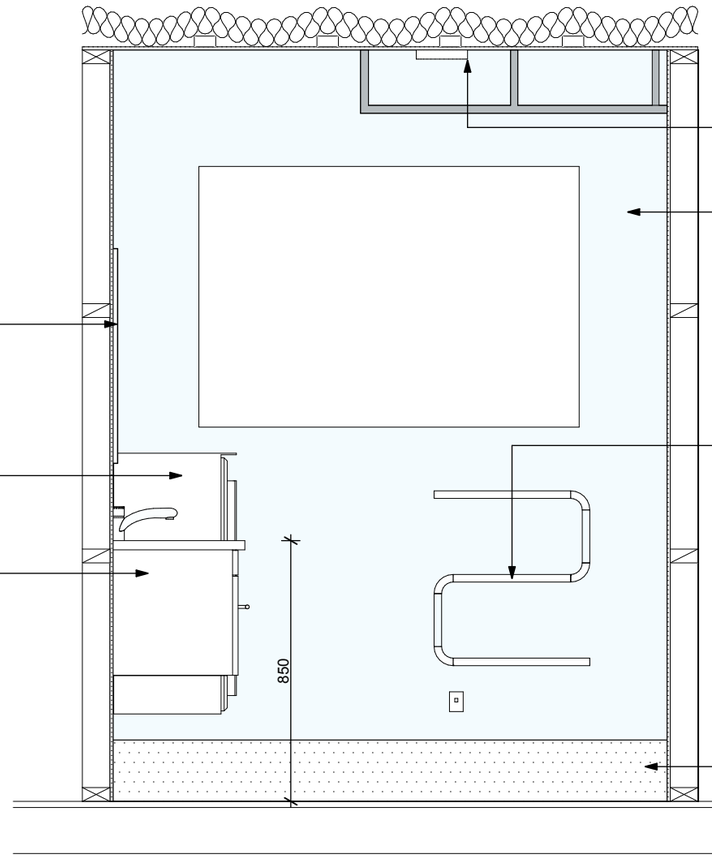

Ceiling Extractor Fan
Manrose / Simx in line fan 100mm MFP100F
69l/s, 250m3/hr, to be Vented through Soffit

Wet Area Linings
Tarkett wet wall linings "Protectwall" 1.5mm - Installed as per manufacturers instructions. onto New Aqua Gib.
New wet wall lining Colour to owners specification

Recessed Mirrored Cabinet
St Michael Dante Plus 600.
Code: 88101-W Set as low as possible for wheel chair use, ensuring adequate height for tap function and other users.

Heated Towel Rails plus RCD. power connection

Wall Tower
Ceraform Wall Hung Mini Tower (850H x 300W x 400mmD)
Allow to pack off wall 20mm min. to allow for cabinet handles. Set height to suit client.

Vanity / Basin
New Ceraform Galaxy 600mm wide wall hung vanity set at 850mm AFL. Complete with Lever type tap

Floor Covering/Lining
Install Slip resistant Tarkett Granite Safe-T flooring with 200mm coved up stand. Colour to be selected by Owner / Client. Note// details supplied does not supersede the manufacturers instructions. Installer is to be a Jacobsen's approved applicator

1 Int. Elevation 1 1:20

PRELIMINARY TENDER SET

DESIGN DRAUGHTING SOLUTIONS LTD
For all of your Draughting and Design Needs
info@designhomes.co.nz PH 09 435 3390 10 Eden Tce, Kamo, Whangarei

office job no. B448
866 Omamari Rd
Dargaville .

ACC funded accessible home modification on behalf of:
accessable completed by Design Draughting Solutions Ltd,

accessable ENVIRONMENTAL HEALTH MANAGEMENT SERVICES

issue	date	drawn	revision notes
1	19/10/17		TDS
2	07/11/17	Evan Russell	BC ISSUE

job no. B448
Bathroom Elevation 1
A3 Set.. Page No. 5

DRAWINGS + DOCUMENTATION REMAIN THE PROPERTY OF ACCESSABLE | DO NOT SCALE OFF DRAWINGS | CONTRACTOR MUST CHECK + VERIFY DISCREPENCIES, DIMENSIONS + LEVELS ON SITE PRIOR TO COMMENCING WORK | DRAWINGS ARE INDICATIVE ONLY OF WORK TO BE DONE + ARE TO BE READ IN CONJUNCTION WITH SPECIFICATION + PRODUCT LITERATURE | ALL WORK TO COMPLY WITH RELEVANT STANDARDS

KDC - Approved Building Consent Document - BC170701 - Pg 7 of 10 - 15/12/2017 - kjn

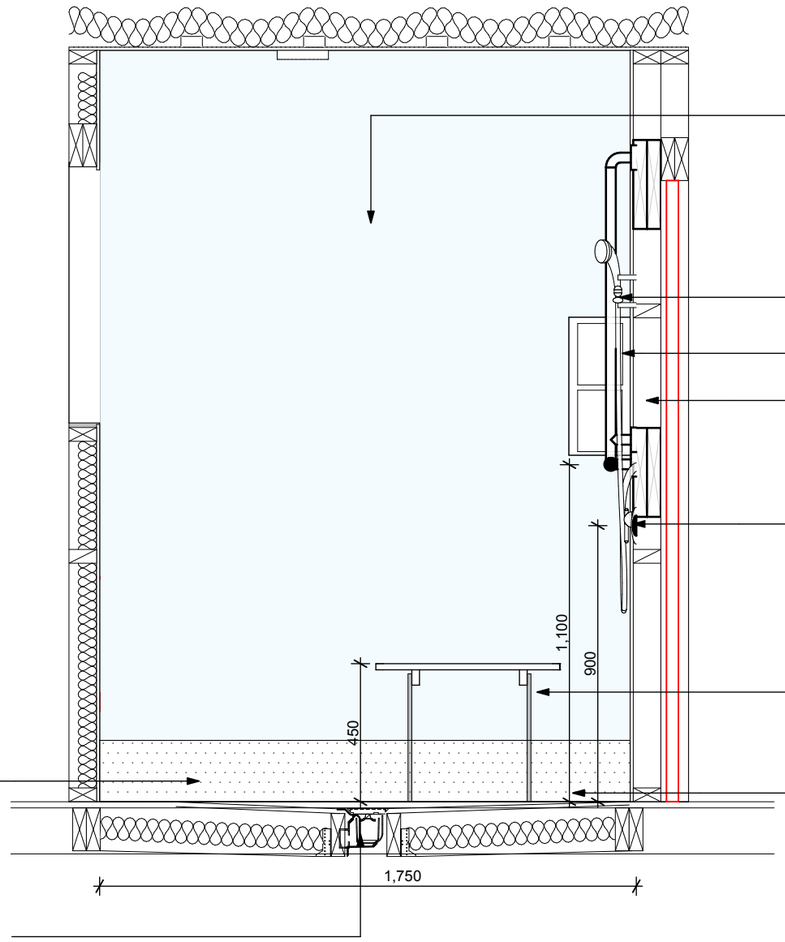

Wet Area Linings
Tarkett wet wall linings "Protectwall" 1.5mm - Installed as per manufacturers instructions. onto New Aqua Gib.
New wet wall lining Colour to owners specification

Shower Head + Slide
Superquip SS Slide Shower Safety Ø32mm T-Rail configuration, 900mm Long. Set 1100mm above FL,

Corner shower caddie with suction cups

90mm Packed out wall to allow plumbing and support for T Rail.

Shower Mixer,
Felton Reflex Fusion Shower Mixer Code RFSCMC. Set 900mm above floor level

Shower Seat
New 600mm wide Folding shower seat with fold down legs.
SuperQuip Code 077/304/600PL/LEGS
Ensure Solid nogging + set at 450mm AFL.
Install 2/290x45 x 2 Solid nogging for seat support.

Floor Covering/Lining
Install Slip resistant Tarkett Granite Safe-T flooring with 200mm coved up stand. Colour to be selected by Owner / Client. Note// details supplied does not supersede the manufacturers instructions. Installer is to be a Jacobsen's approved applicator

Wet Area Shower
1050x1750 Formed Wet Area Shower. Cut into existing floor joists + Formed fall to central drainage point set 1:50 min gradient. fall below Floor Level.

Floor Waste
Allproof Revolver Easyclean Waste, REVSCPT 50mm, with Square chrome / brass tile grate

1 Int. Elevation 2 1:20

PRELIMINARY TENDER SET

DESIGN DRAUGHTING SOLUTIONS LTD
For all of your Draughting and Design Needs
info@designhomes.co.nz PH 09 435 3390 10 Eden Tce, Kamo, Whangarei

office job no. B448
866 Omamari Rd
Dargaville .

ACC funded accessible home modification on behalf of:
accessable completed by Design Draughting Solutions Ltd,

accessable ENVIRONMENTAL HEALTH MANAGEMENT SERVICES

issue	date	drawn	revision notes
1	19/10/17		TDS
2	07/11/17	Evan Russell	BC ISSUE

job no. B448
Bathroom Elevation 2
A3 Set.. Page No. 6

DRAWINGS + DOCUMENTATION REMAIN THE PROPERTY OF ACCESSABLE | DO NOT SCALE OFF DRAWINGS | CONTRACTOR MUST CHECK + VERIFY DISCREPENCIES, DIMENSIONS + LEVELS ON SITE PRIOR TO COMMENCING WORK | DRAWINGS ARE INDICATIVE ONLY OF WORK TO BE DONE + ARE TO BE READ IN CONJUNCTION WITH SPECIFICATION + PRODUCT LITERATURE | ALL WORK TO COMPLY WITH RELEVANT STANDARDS

KDC - Approved Building Consent Document - BC170701 - Pg 8 of 10 - 15/12/2017 - kjn

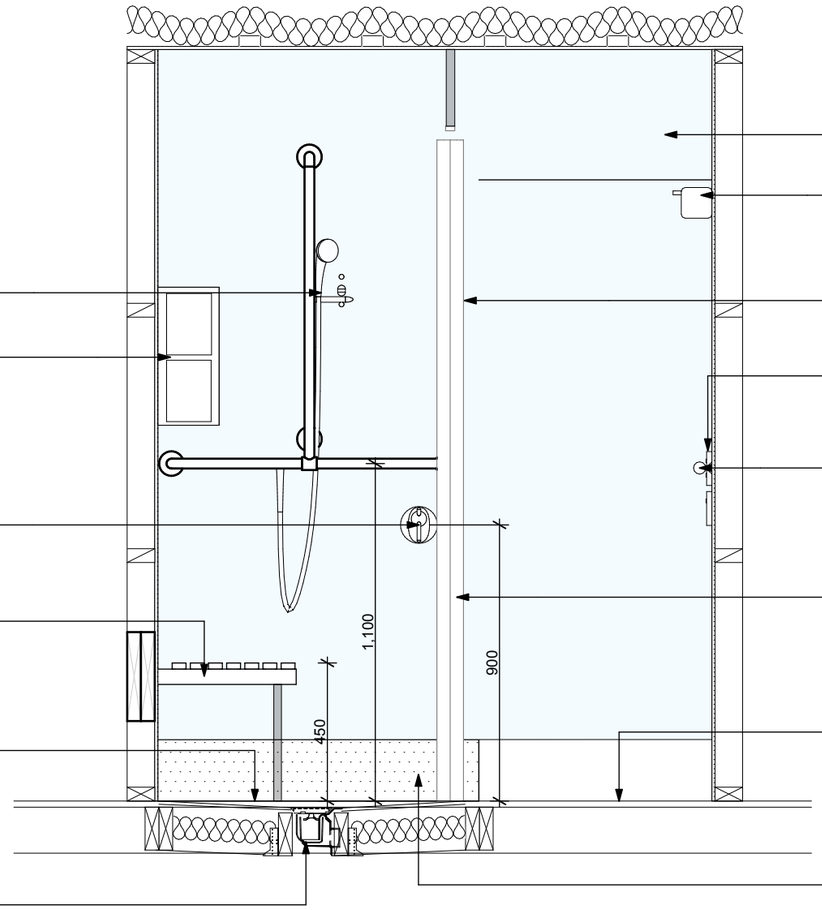

Shower Head + Slide
Superquip SS Slide Shower Safety Ø32mm T-Rail configuration, 900mm Long. Set 1100mm above FL,

Corner shower caddie with suction cups

Shower Mixer,
Felton Reflex Fusion Shower Mixer Code RFSCMC. Set 900mm above floor level

Shower Seat
New 600mm wide Folding shower seat with fold down legs.
SuperQuip Code 077/304/600PL/LEGS
Ensure Solid nogging + set at 450mm AFL.
Install 2/290x45 x 2 Solid nogging for seat support.

Wet Area Shower
1050x1750 Formed Wet Area Shower. Cut into existing floor joists + Formed fall to central drainage point set 1:50 gradient fall. below Floor Level.

Floor Waste
Allproof Revolver Easyclean Waste, REVSCPT 50mm, with Square chrome / brass tile grate

Wet Area Linings
Tarkett wet wall linings "Protectwall" 1.5mm - Installed as per manufacturers instructions. onto New Aqua Gib.
New wet wall lining Colour to owners specification

Fan Heater 2mtr high. plus a RCD protected power connection

2030 x 300 Safety 'A' Grade Glass barrier

New Light switch incorporating Lights, Heater and Extractor

Towel Rail
Superquip 600mm wide to be installed as a towel rail, set at 1.0m from floor level.
install onto solid nogging/studs
Code : 030/304HD600

Shower Curtain
Watertight Down-Under' 2m min length weighted drop curtain + over head track. Set track to allow 300mm gap above and bottom edge to touch floor level. Allow for custom made length if required depending on existing ceiling height. Colour to owners selection

Floor Channel
Jesani 40mm wide Door Threshold Strip drain Channel with grate insert installed as per manufacturers instructions

Floor Covering/Lining
Install Slip resistant Tarkett Granite Safe-T flooring with 200mm coved up stand. Colour to be selected by Owner / Client. Note// details supplied does not supersede the manufacturers instructions. Installer is to be a Jacobsen's approved applicator

1 Int. Elevation 3 1:20

PRELIMINARY TENDER SET

DESIGN DRAUGHTING SOLUTIONS LTD
For all of your Draughting and Design Needs
info@designhomes.co.nz PH 09 435 3390 10 Eden Tce, Kamo, Whangarei

office job no. B448
866 Omamari Rd
Dargaville .

ACC funded accessible home modification on behalf of:
accessable completed by Design Draughting Solutions Ltd,

accessable ENVIRONMENTAL HEALTH MANAGEMENT SERVICES

issue	date	drawn	revision notes
1	19/10/17		TDS
2	07/11/17	Evan Russell	BC ISSUE

job no. B448
Bathroom Elevation 3
A3 Set.. Page No. 7

DRAWINGS + DOCUMENTATION REMAIN THE PROPERTY OF ACCESSABLE | DO NOT SCALE OFF DRAWINGS | CONTRACTOR MUST CHECK + VERIFY DISCREPENCIES, DIMENSIONS + LEVELS ON SITE PRIOR TO COMMENCING WORK | DRAWINGS ARE INDICATIVE ONLY OF WORK TO BE DONE + ARE TO BE READ IN CONJUNCTION WITH SPECIFICATION + PRODUCT LITERATURE | ALL WORK TO COMPLY WITH RELEVANT STANDARDS

KDC - Approved Building Consent Document - BC170701 - Pg 9 of 10 - 15/12/2017 - kjn

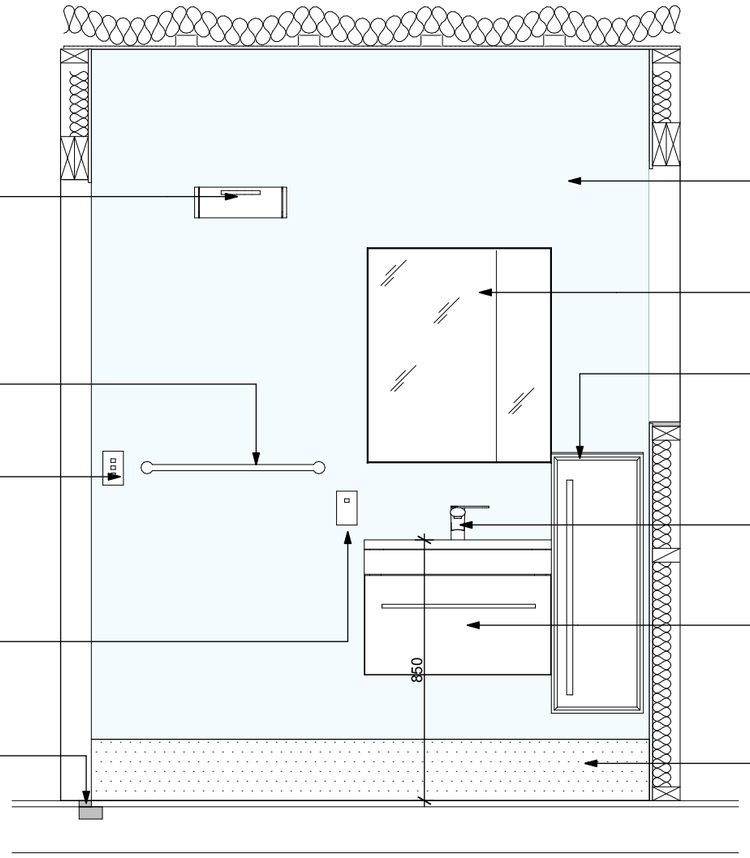

Fan Heater 2mtr high. plus a RCD protected power connection

Towel Rail
Superquip 600mm wide to be installed as a towel rail, set at 1.0m from floor level.
install onto solid nogging/studs
Code : 030/304HD600

New Light switch incorporating Lights, Heater and Extractor

RCD Power point

Floor Channel
Jesani 40mm wide Door Threshold Strip drain Channel with grate insert installed as per manufacturers instructions

Wet Area Linings
Tarkett wet wall linings "Protectwall" 1.5mm - Installed as per manufacturers instructions. onto New Aqua Gib.
New wet wall lining Colour to owners specification

Recessed Mirrored Cabinet
St Michael Dante Plus 600.
Code: 88101-W Set as low as possible for wheel chair use, ensuring adequate height for tap function and other users.

Wall Tower
Ceraform Wall Hung Mini Tower (850H x 300W x 400mmD)
Set height to suit client.

Vanity / Basin Mixer -
Single lever mixer Tap - 'Foreno Mana'
Code: 'MN02C'

Vanity / Basin
New Ceraform Galaxy 600mm wide wall hung vanity set at 850mm AFL. Complete with Lever type tap

Floor Covering/Lining
Install Slip resistant Tarkett Granite Safe-T flooring with 200mm coved up stand. Colour to be selected by Owner / Client. Note// details supplied does not supersede the manufacturers instructions. Installer is to be a Jacobsen's approved applicator

1 Int. Elevation 4 1:20

PRELIMINARY TENDER SET

DESIGN DRAUGHTING SOLUTIONS LTD
For all of your Draughting and Design Needs
info@designhomes.co.nz PH 09 435 3390 10 Eden Tce, Kamo, Whangarei

office job no. B448
866 Omamari Rd
Dargaville .

ACC funded accessible home modification on behalf of:
accessable completed by Design Draughting Solutions Ltd,

accessable ENVIRONMENTAL HEALTH MANAGEMENT SERVICES

issue	date	drawn	revision notes
1	19/10/17		TDS
2	07/11/17	Evan Russell	BC ISSUE

job no. B448
Bathroom Elevation 4
A3 Set.. Page No. 8

DRAWINGS + DOCUMENTATION REMAIN THE PROPERTY OF ACCESSABLE | DO NOT SCALE OFF DRAWINGS | CONTRACTOR MUST CHECK + VERIFY DISCREPENCIES, DIMENSIONS + LEVELS ON SITE PRIOR TO COMMENCING WORK | DRAWINGS ARE INDICATIVE ONLY OF WORK TO BE DONE + ARE TO BE READ IN CONJUNCTION WITH SPECIFICATION + PRODUCT LITERATURE | ALL WORK TO COMPLY WITH RELEVANT STANDARDS

KDC - Approved Building Consent Document - BC170701 - Pg 10 of 10 - 15/12/2017 - kjn

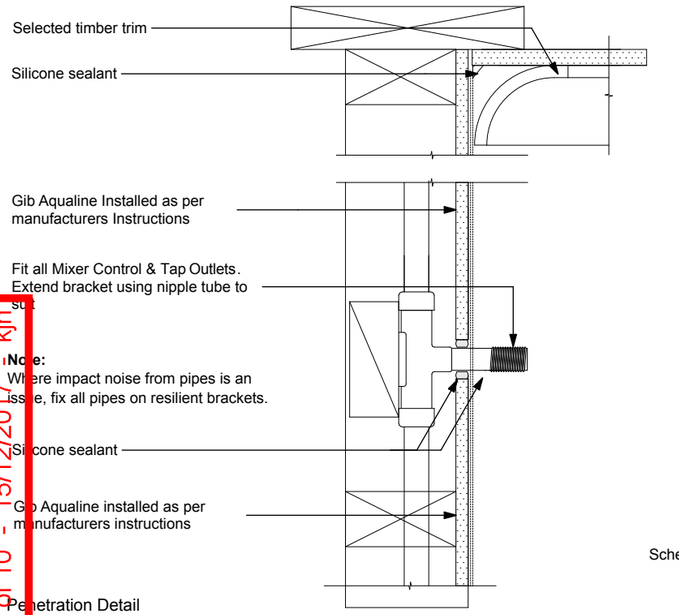

Penetration Detail
Refer to Gib Wet Area Systems Detail (GAW-D012) for guide only

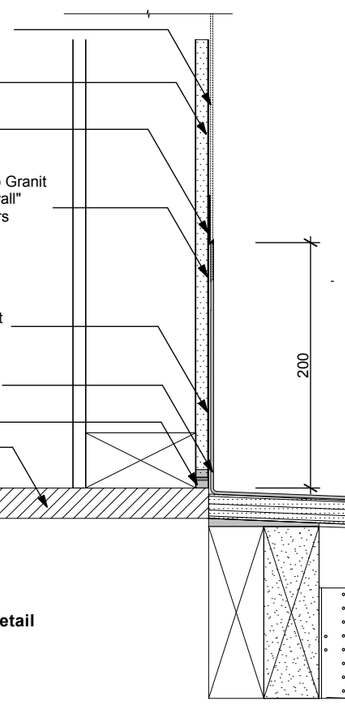

W.A.S Shower Floor to Wall Detail

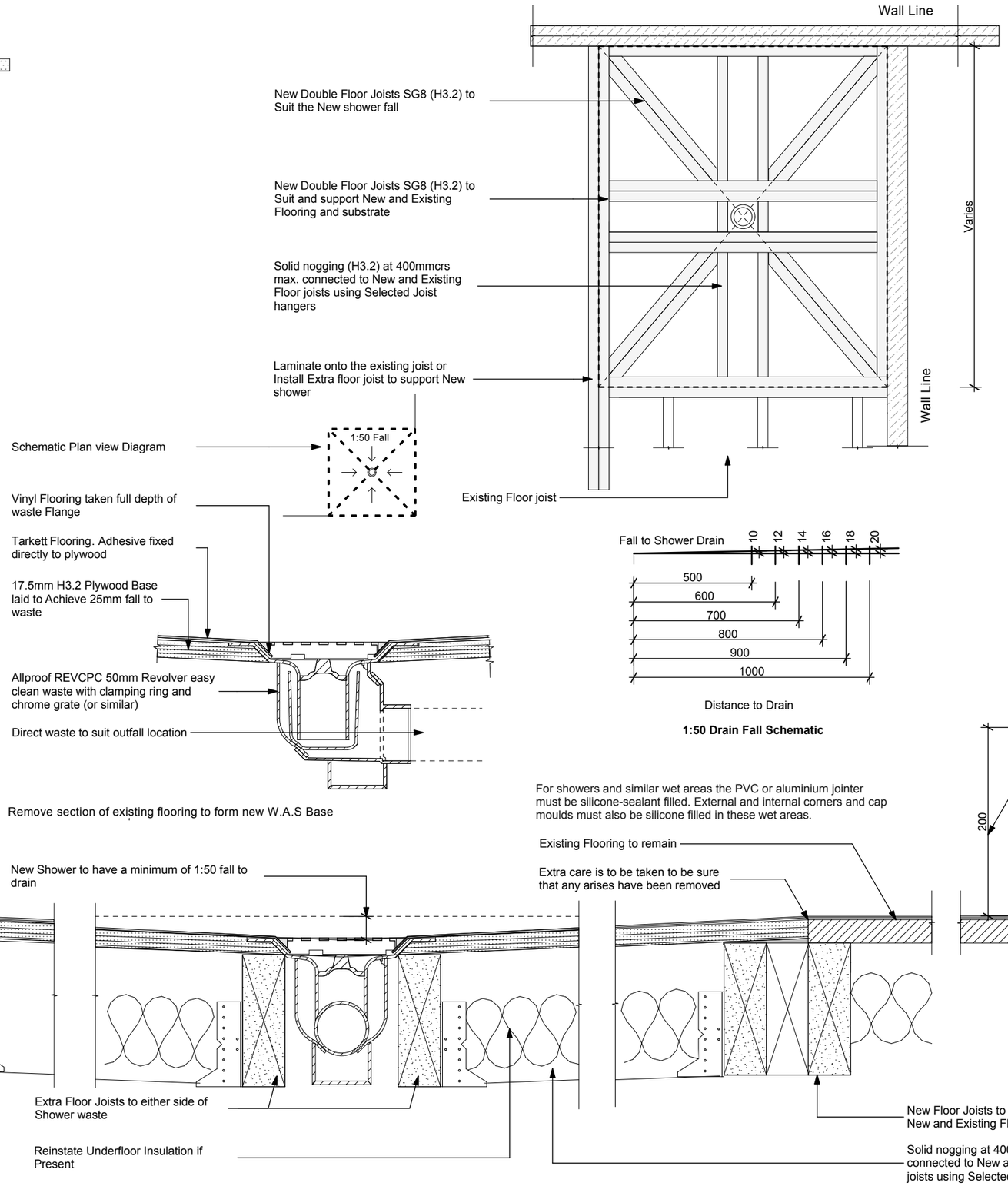

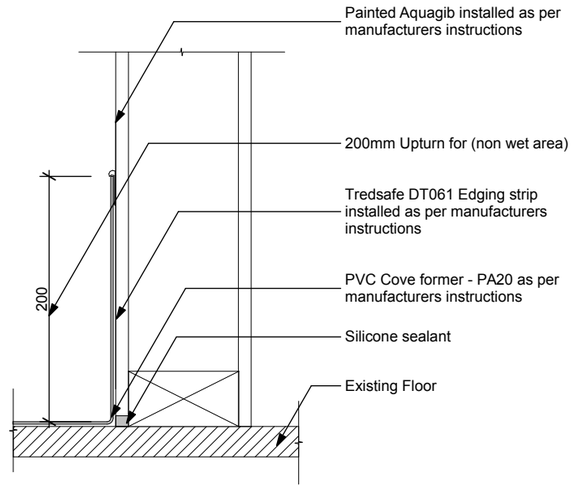

Bathroom (Non wet area) Floor to Wall Detail

TIMBER FLOOR NOTES

1. Allow to provide New Grade SG8, H3.2 Timber joists under wet area shower
2. Joists are to be set down 25mm and packed upon to suit fall
3. Joists Located adjacent to existing joists laminated as per Clause 2.4.4.7 NZS 3604
4. New Joists sizes to match existing joists
5. Joists are to be Grade SG8 min. and at 400mm crs. max.
6. Joists to be supported by and span to bearers at each end

1 Wet Area Details 1:5

PRELIMINARY TENDER SET

DESIGN DRAUGHTING SOLUTIONS LTD
For all of your Draughting and Design Needs
info@designhomes.co.nz PH 09 435 3390 10 Eden Tce, Kamo, Whangarei

office job no. B448
866 Omamari Rd
Dargaville .

ACC funded accessible home modification on behalf of:
accessable completed by Design Draughting Solutions Ltd,

accessable ENVIRONMENTAL HEALTH MANAGEMENT SERVICES

issue	date	drawn	revision notes
1	19/10/17		TDS
2	07/11/17	Evan Russell	BC ISSUE

job no. B448
Wet Area Details
A3 Set.. Page No. 9

DRAWINGS + DOCUMENTATION REMAIN THE PROPERTY OF ACCESSABLE | DO NOT SCALE OFF DRAWINGS | CONTRACTOR MUST CHECK + VERIFY DISCREPENCIES, DIMENSIONS + LEVELS ON SITE PRIOR TO COMMENCING WORK | DRAWINGS ARE INDICATIVE ONLY OF WORK TO BE DONE + ARE TO BE READ IN CONJUNCTION WITH SPECIFICATION + PRODUCT LITERATURE | ALL WORK TO COMPLY WITH RELEVANT STANDARDS

KDC - Approved Building Consent Document - BC170701 - Pg 1 of 91 - 11/01/2018 - kjn

Kaipara te Oranganui

KAIPARA DISTRICT

Two Oceans Two Harbours

Approved Building Consent Documents

Please note: A copy of the stamped, approved documents must be available onsite for **all** inspections.

KDC - Approved Building Consent Document - BC170701 - Pg 2 of 91 - 11/01/2018 - kjn

SPECIFICATION

ACC Modifications

at

866 Omamari Road
Dargaville

for

Accessable

Job Number: B448

Date: 19/10/17

1012 TABLE OF CONTENTS

1012 TABLE OF CONTENTS 2
1220 PROJECT 3
1237 WARRANTIES 4
1270 CONSTRUCTION 6

2110 DEMOLITION WORKS 9

3820 CARPENTRY 11

5113G GIB® PLASTERBOARD LININGS 13
5230 INTERIOR DOORS 17
5433E ECOPLY® FLOORS 19

6411J JACOBSEN VINYL SURFACING 21
6412J JACOBSEN TARKETT LINOLEUM 24

7120 HOT & COLD WATER SYSTEM 28
7151 SANITARY FIXTURES, TAPWARE & ACCESSORIES 32
7673 SPLIT UNIT HEAT PUMP SYSTEMS 35
7701 ELECTRICAL BASIC 40

OTHER DOCUMENTATION SUPPLIED:

1. MANUFACTURERS APPRAISALS AND INSTALLATION DOCUMENTATION:
   - JACOBENS TARKETT WET ROOM INSTALLATION GUIDE
   - GIB AQUALINE INSTALLATION BOOKLET
   - JESANI DOOR CHANNEL TECHNICAL INFO

KDC - Approved Building Consent Document - BC170701 - Pg 3 of 91 - 11/01/2018 - kjn

1220 PROJECT

1. GENERAL

This general section describes the project including:
- A description of the work
- Site description, features and restrictions
- Design parameters for design by contractor

1.1 READ ALL SECTIONS TOGETHER
Read all general sections together with all other sections.

Description of the work

1.2 SCOPE OF THE WORK
- Modification to existing Bathroom

1.3 RESTRICTED BUILDING WORK
This project includes Restricted Building Work.

Site

1.4 LEGAL DESCRIPTION
The site of the works, the street address and the legal description are shown on the drawings.

KDC - Approved Building Consent Document - BC170701 - Pg 4 of 91 - 11/01/2018 - kjn

KDC - Approved Building Consent Document - BC170701 - Pg 5 of 91 - 11/01/2018 - kjn

1237 WARRANTIES

1. GENERAL

This general section refers to the requirements for warranties/guarantees as listed in this section, as referred to within the body of this specification, and as referred to within separate specifications/documents relating to this project. It includes:
- Warranties for parts of the work required by the principal in a required form
- Installer/applicator warranties for parts of the work in the installer's/applicator's standard form
- Manufacturer/supplier warranties provided with products, appliances and the like in the manufacturer's/supplier's standard form
- Guarantees provided by contractor in the contractor's standard form

These guarantees/warranties are in addition to any warranties, implied warranties, or guarantees that are required by the Building Act, the Building Regulations, or the building consent.

Warranties

1.1 PROVIDE WARRANTIES
Provide executed warranties in favour of the principal in respect of, but not limited to, materials, components, service, application, installation and finishing called for in that specified section of work. The terms and conditions of the warranty in no case negate the minimum remedies available under common law as if no warranty had been offered. Failure to provide the warranty does not reduce liability under the terms of the warranty called for in that specified section of work.

- Commence warranties from the date of practical completion of the contract works (unless otherwise stated).
- Maintain their effectiveness for the times stated.
- Provide executed warranties prior to practical completion.

1.2 WARRANTIES - INSTALLER/APPLICATOR
Where installer/applicator warranties are offered covering execution and materials of proprietary products or complete installations, provide such warranties to the contract administrator. These warranties may be provided in lieu of the warranties that are otherwise required provided that these warranties are subject to similar conditions and periods.

Provide warranties in favour of the principal. The terms and conditions of such warranties in no case negate the minimum remedies available under common law as if no warranty had been offered. Failure to provide the warranty does not reduce liability for execution and materials for that part of the work.

1.3 WARRANTIES - MANUFACTURER/SUPPLIER
Where warranties are offered covering materials, equipment, appliances or proprietary products, provide all such warranties to the contract administrator.

Provide warranties in favour of the principal. The terms and conditions of such warranties in no case negate the minimum remedies available under common law as if no warranty had been offered. Failure to provide the warranty does not reduce liability for execution and materials for that part of the work.

Submission

1.4 REVIEW BY CONTRACTOR
Obtain the warranties from the installers, applicators, manufacturers and suppliers at the earliest possible date and review to ensure that they are correctly filled out and executed. Where warranties are executed as a deed, ensure that a duplicate copy is provided for execution by the owner/principal. Keep safe and secure until required for submission.

KDC - Approved Building Consent Document - BC170701 - Pg 6 of 91 - 11/01/2018 - kjn

1.5 WARRANTIES - REQUIRED BY BUILDING CONSENT AUTHORITY
Obtain copies of warranties required as a condition of the building consent in the form required for submission to the BCA. Keep safe and secure until required at the time of the BCA final inspection and Code Compliance Certificate.

1.6 WARRANTIES - REQUIRED BY CONTRACT
Obtain copies of warranties listed in the contract documents. Provide all warranties at the same time. If the project has an operations and maintenance documentation provision, present the warranties with the operations and maintenance information. If no operations and maintenance documentation provision exists, present the warranties to the contract administrator in a loose-leaf binder with a contents index suitably labelled and including the project name and details. Provide a title on the binder edge "Warranties for (project name)"

1.7 WARRANTIES - SUBMISSION NZIA SCC CONTRACT
Refer to the contract conditions for any requirement relating to the time for submission for warranties and guarantees. Submit all warranties to the architect no later than the date of the contractor's advice of achieving practical completion.

1.8 WARRANTIES - SUBMISSION NZS3910:2013 CONTRACT
Refer to NZS 3910 Conditions of Contract for building and civil engineering construction, clauses 11.5 and 11.6 for requirements relating to the time for submission of warranties and guarantees. Submit all warranties/guarantees to the engineer no later than the date that the contractor notifies that it believes the contract works qualify for practical completion.

1.9 WARRANTIES - SUBMISSION NZS3915:2005 CONTRACT
Refer to NZS 3915 Conditions of contract for building and civil engineering construction (where no person is appointed to act as engineer to the contract), clause 11.5 for requirements relating to the time for submission for warranties and guarantees. Submit all warranties/guarantees to the principal before or at the time of the issue of the provisional defects liability certificate the end of the defects liability period.

1.10 WARRANTIES - SUBMISSION NZS3916:2013 CONTRACT
Refer to NZS 3916 Conditions of contract for building and civil engineering – Design and construct, clauses 11.5 and 11.6 for requirements relating to the time for submission of warranties and guarantees. Submit all warranties/guarantees to the engineer no later than the date that the contractor notifies that it believes the contract works qualify for practical completion.

Weathertightness and watertightness warranty

1.11 WEATHERTIGHTNESS AND WATERTIGHTNESS WARRANTY
A warranty is required from the contractor for a minimum period of 2 years, covering the weathertightness of the complete building envelope and the watertightness of all liquid supply and disposal systems and fittings. This general warranty is in addition to any specific warranties required.

Provide this warranty in favour of the principal. The terms and conditions of this warranty in no case negate the minimum remedies available under common law as if no warranty had been offered. Failure to provide the warranty does not reduce liability for execution and materials for that part of the work.

- Commence the warranty from the date of Practical Completion.
- Maintain its effectiveness for the time stated.

KDC - Approved Building Consent Document - BC170701 - Pg 7 of 91 - 11/01/2018 - kjn

1270 CONSTRUCTION

1. GENERAL

This GENERAL section relates to common requirements for construction issues including: -
- Quality assurance
- Noise and nuisance
- Set out
- Common execution requirements
- Common materials requirements

Quality control and assurance

1.1 QUALITY ASSURANCE
Carry out and record regular checks of material quality and accuracy, including:
- Levels of all floors relative to the site datum.
- Framing timber moisture content.

Where any material, quality or dimension falls outside specified or required tolerances, obtain written direction from the contract administrator. Where building consent approval is affected, confirm remedial action with the Building Consent Authority.

Provide all materials, plant, attendances, supervision, inspections and programming to ensure the required quality standards are met by all project personnel.

Noise and nuisance

1.2 LIMIT CONSTRUCTION NOISE
Minimise the effects of noise generation by including in the planning of the work such factors as placing of plant, programming the sequence of operations and other management functions. Limit construction noise to comply with the requirements of NZS 6803, the requirements of the Resource Management Act sections 326, 327 and 328 and the Health and Safety in Employment Regulations clause 11.

1.3 INCONVENIENCE TO OTHERS
When the works are to be carried out in or around occupied premises, ascertain the nature and times of occupation and use. Carry out the works in a manner to minimise inconvenience, nuisance and danger to occupants and users.

1.4 DIRT AND DROPPINGS
Remove dirt and droppings deposited on public or private thoroughfares from vehicles servicing the site to the satisfaction of the appropriate authorities and the contract administrator.

1.5 DAMAGE AND NUISANCE
Take all precautions to prevent damage and nuisance from water, fire, smoke, dust, rubbish and all other causes resulting from the construction works.

Set-out and tolerances

1.6 USE OF SET-OUT INSTRUMENTS
Permit without charge, the use of instruments already on site for checking, setting out and levels.

1.7 CHECK DIMENSIONS
Check all dimensions both on drawings and site, particularly the correlation between components and work in place. Take all dimensions on drawings to be between structural elements before linings or finishes, unless clearly stated otherwise.

KDC - Approved Building Consent Document - BC170701 - Pg 8 of 91 - 11/01/2018 - kjn

1.8 TOLERANCES
All work to be level, plumb, and true to line and face. Unless otherwise specified in specific work sections of this specification, tolerances for structural work shall comply with the following:

Timber framing:	To NZS 3604 Timber-framed buildings Clause 2.2 Tolerances Table 2.1 Timber framing tolerances

Execution

1.9 EXAMINE PREVIOUS WORK
Before commencing any part of the work carefully examine the previous work on which it may depend. Report in writing to the contract administrator defects that may affect the quality of the proposed work and obtain instructions. Commencing work on any part means that previous work is accepted as being satisfactory for work of the required standard.

1.10 WORKER QUALIFICATIONS
All work to be level, plumb, and true to line and face. Employ only experienced workers familiar with the materials and techniques specified.

1.11 MINIMISE DELAYS DUE TO WEATHER
Use appropriate techniques and methods to prevent damage and minimise delays due to weather.

Materials

1.12 NEW PRODUCTS AND MATERIALS
Materials and products to be new unless stated otherwise, of the specified standard, and complying with all cited documents.

1.13 COMPATIBILITY OF MATERIALS AND FINISHES
Ensure all parts of a construction or finish are compatible and their individual use approved by the manufacturers and suppliers of other parts of the system. Source all parts of a system from a single manufacturer or supplier.

1.14 STORING PRODUCTS AND MATERIALS
Take delivery of and store products, materials and components in accordance with codes of practice and the product manufacturer's or supplier's stated requirements. Maintain the proper condition of any protective packaging, wrappings or supports during delivery, unloading and storage.

1.15 HANDLING PRODUCTS AND MATERIALS
Handle products, materials and components in accordance with codes of practice and the manufacturer's or supplier's stated guidelines. Avoid distortion and any contact with potentially damaging surfaces or conditions.

1.16 SUBSTRATE CONDITIONS
Ensure substrate conditions are within the manufacturer's or supplier's stated guidelines both before and during the installation of any material, product or system. Obtain written instructions on the necessary action to rectify unsatisfactory conditions.

1.17 INSTALLING PRODUCTS AND MATERIALS
Install in accordance with the manufacturer's or supplier's technical literature. Ensure that all installers are familiar with the required substrate conditions and the manufacturer's or supplier's specified preparation, fixing and finishing techniques.

1.18 COMPLY WITH STANDARDS
Comply with the relevant and/or cited Standard for any material or component. Obtain certificates of compliance when requested by the contract administrator.

KDC - Approved Building Consent Document - BC170701 - Pg 9 of 91 - 11/01/2018 - kjn

1.19 CONDITION OF MATERIALS AND COMPONENTS
To be in perfect condition when incorporated into the work.

1.20 INCOMPATIBLE MATERIALS AND METALS
Separate incompatible materials and metals with separation layers, sleeves or gaskets of plastic film, bituminous felt or mastic or paint coatings, installed so that none are visible on exposed surfaces.

Final presentation and cleaning

1.21 REMOVE TEMPORARY PROTECTION
Remove all temporary markings, coverings, labels and protective wrappings unless instructed otherwise.

1.22 REPLACE DAMAGED MATERIALS
Replace all materials or component damaged during the works to the standard of and integral with the original.

1.23 COMPLETE ALL SERVICES
Ensure all services are complete and operational, with all temporary labelling removed, required labelling fixed and service instructions provided.

Commissioning

1.24 MOVING PARTS
Adjust, ease and lubricate all doors, windows, drawers, hardware, appliances, controls and all moving parts to give easy and efficient operation.

KDC - Approved Building Consent Document - BC170701 - Pg 10 of 91 - 11/01/2018 - kjn

2110 DEMOLITION WORKS

1. GENERAL

This section relates to the demolition of existing buildings and structures in whole or in part, to the extent necessary to carry out the new work.

1.1 DOCUMENTS
Documents referred to in this section are:

NZBC F5/AS1	Construction and demolition hazards
NZS 6803	Acoustics - Construction noise
NZDAA	Best practice guidelines for demolition in New Zealand
WorkSafe	Management and Removal of Asbestos (Approved CoP)

Health and Safety at Work Act 2015
Health and Safety at Work (Asbestos) Regulations 2016

1.2 QUALIFICATION
Carry out demolition only under the supervision of a suitably experienced person and using only experienced operators and drivers. Use only experienced, certified, construction blasters for explosives demolition.

1.3 NUISANCE
Take all precautions necessary to minimise nuisance caused by dust, dirt, rubbish and water.

1.4 HEALTH AND SAFETY
Comply with the Health and Safety at Work Act 2015 in general, NZBC F5/AS1 and NZDAA Best practice guidelines for demolition in New Zealand, section 5 Demolition Safety.

1.5 BUILDING CONSENT REQUIREMENTS
Demolition work to be carried out to building consent requirements

1.6 SURVEY
Before commencing work, carry out a thorough survey and examination of all buildings or structures to be demolished in order to ensure the extent, sequence, technique and method of demolition proposed can be safely and efficiently carried out.
Take photographs of the works, adjacent buildings and sites, before commencing work. Provide a set of these photographs as a record of existing condition.

1.7 SERVICES
Before commencing demolition, arrange with all utility network operators to disconnect services and remove fittings and equipment. Pay all fees and charges for this work.

1.8 MATERIAL
Material from the demolition becomes the property of the contractor except where expressly provided otherwise. Remove redundant materials from the site as work proceeds.

1.9 SALVAGE
Designated items remain the property of the owner.

1.10 BURNING OF MATERIALS
Burning of materials is not permitted on site.

2. EXECUTION

2.1 DEMOLITION GENERALLY
Comply with the requirements of NZDAA Best practice guidelines for demolition in New Zealand. Submit a written demolition plan to the requirements of section 4.7, Demolition plan (method statement).

KDC - Approved Building Consent Document - BC170701 - Pg 11 of 91 - 11/01/2018 - kjn

2.2 PROTECT
Protect retained parts of existing buildings, the site and site structures, trees and shrubs. Take care in the cutting away and stripping out to reduce the amount of making good.

2.3 SUPPORT
Support and brace the existing structure during the cutting of new openings or the replacement of structural parts. Prevent debris from overloading any part of the structure. Do not remove supports until the new work is strong enough to support the existing structure. Ensure all work remains structurally stable and sound.

2.4 TEMPORARY SCREENS
Erect approved screens wherever penetration of weather, dust and dirt needs to be prevented. Adjust screens as work proceeds.

2.5 SITE SAFETY
Prevent access by unauthorised persons. Illuminate and protect all holes, unsafe buildings and other hazards. Leave site and buildings safe at the close of each day's work.

2.6 FLAMMABLE OR EXPLOSIVE CONDITIONS
Prevent fire or explosion and arrange to alert the appropriate authority where any danger exists.

2.7 DEMOLISH
Demolish buildings and structures down to the existing finished ground level. Do not remove support to adjacent properties or buildings.

2.8 DIG OUT
Dig out foundations, footings, basements, floor slabs, paths, drains, cesspits and manholes that are part of or service the demolished building. Do not backfill the resulting voids.

2.9 SALVAGE
Carefully dismantle and store safely all salvage items where directed; for removal, use on the site, or until completion of the works.

2.10 REINSTATE AND MAKE GOOD
Reinstate and make good demolition damage to adjoining properties, existing work, services, or property.

2.11 TAKE AWAY
Take away from the site all plant and equipment, temporary access works and demolished materials and elements. Leave the site completely clean and tidy.

KDC - Approved Building Consent Document - BC170701 - Pg 12 of 91 - 11/01/2018 - kjn

3820 CARPENTRY

1. GENERAL

This section relates to the supply and erection of timber framing, as a framed structure, or as partitioning. It includes prefabricated timber and engineered wood.

1.2 DOCUMENTS
The following documents are specifically referred to in this section:

NZBC B2/AS1	Durability
NZS 3602	Timber and wood-based products for use in building
NZS 3603	Timber structures standard
NZS 3604	Timber-framed buildings
NZS 3622	Verification of timber properties
FTMA CoP	Frame and Truss Manufacturers Association Code of Practice

***A copy of NZS 3604 Timber-framed buildings, must be held on site.**

1.3 QUALIFICATIONS
Workers to be experienced, competent trades people familiar with the materials and techniques specified.

1.4 DIMENSIONS
All timber sizes except for battens are actual minimum dried sizes.

2. PRODUCTS

2.1 TIMBER FRAMING, TREATED
Species, grade and in service moisture content to NZS 3602, NZBC B2/AS1 and treatment to NZS 3640, NZBC B2/AS1. Structural grade (SG) to NZS 3604, NZS 3622 with properties to NZS 3603.

Components

2.2 NAILS
Type to NZS 3604, section 4, **Durability**, and of the size and number for each particular types of joint as laid down in the nailing schedules of NZS 3604, sections 6-10.

2.3 BOLTS AND SCREWS
Bolts and screws of engineering and/or coach type complete with washers, to the requirements of NZS 3604, section 4, **Durability**, and of the number and form required for each particular junction to NZS 3604, sections 6-10.

2.4 NAIL PLATES
Comply with the requirements of NZS 3604, section 4, **Durability**, and of the number and form required for each particular junction to NZS 3604, sections 6-10. Plates to the plate manufacturer's design for the particular locations as shown on the drawings.

2.5 CONNECTORS
Comply with the requirements of NZS 3604, section 4, **Durability**, and of the number and form required for each particular junction to NZS 3604, sections 6-10. Connectors and structural brackets to the connector manufacturer's design for particular locations shown on drawings.

2.6 CORROSION RISKS
For interior timber, treated with copper-based timber preservatives (H3.2 or higher), use a minimum of hot-dipped galvanized steel fixings and fasteners.

For exterior timber, timber in damp areas and timber subject to occasional wetting, use only stainless steel (or equivalent) fixings and connectors, when the timber is treated with; Copper Azole (CuAz, Preservative code 58), Alkaline Copper Quaternary (ACQ, Preservative code 90), Micronise Copper Azole (code 88) or Micronised Copper Quaternary (code 89).

KDC - Approved Building Consent Document - BC170701 - Pg 13 of 91 - 11/01/2018 - kjn

3. EXECUTION

3.1 EXECUTION GENERALLY
To NZS 3604 except as varied in this specification. Execution to include those methods, practices and processes contained in the unit standards for the National Certificate in Carpentry and the National Certificate in Joinery (cabinetry, exterior joinery, stairs).

3.2 SEPARATION
Separate all timber framing timbers from concrete, masonry and brick by: -
- a full length bituminous damp-proof membrane overlapping timber by at least 6mm; or
- a 12mm minimum free draining air space

3.3 ATTENDANCE
Provide and fix blocks, nogs, openings and other items as required by other trades.

3.4 MOISTURE CONTENT
Maximum allowable equilibrium moisture content (EMC) for non air-conditioned or centrally heated buildings for framing to which linings are attached.

Framing at erection:	24% maximum
Framing at enclosure:	20% maximum
Framing at lining:	16% maximum

3.5 SET-OUT
Set out framing in accordance with the requirements of NZS 3604 and as required to support sheet linings and claddings.

3.6 FRAMING FLOORS
Framed and fastened to NZS 3604, section 7, **Floors**.

3.7 FRAMING WALLS
Frame to required loading and bracing complete with lintels, sills and nogs, all fabricated and fastened to NZS 3604, section 8, **Walls**.

3.8 DPC TO LOSP TREATED TIMBER
Refer to 4161 UNDERLAYS, FOIL AND DPC section.

KDC - Approved Building Consent Document - BC170701 - Pg 14 of 91 - 11/01/2018 - kjn

5113G GIB® PLASTERBOARD LININGS

1. GENERAL

This section relates to the supply, fixing and jointing of GIB® plasterboard linings and accessories to timber and steel framed walls and ceilings to form:
- standard systems
- bracing systems
- wet area systems

Documents

1.1 DOCUMENTS
The following documents are specifically referred to in this section:

NZBC E2/AS1	External moisture
AS 1397	Continuous hot-dip metallic coated steel sheet and strip - Coatings of zinc and zinc alloyed with aluminium and magnesium
AS/NZS 2588	Gypsum plasterboard
AS/NZS 2589	Gypsum linings - Application and finishing
NZS 3604	Timber-framed buildings
BRANZ Technical Paper P21	BRANZ Technical Paper P21: A wall bracing test and evaluation procedure (2010)

1.2 MANUFACTURER/SUPPLIER DOCUMENTS
Manufacturer's and supplier's documents relating to this part of the work:
- GIB® Site Guide (Dec 2014)
- GIB Aqualine® Wet Area Systems (March 2007)

- GIBFix® Framing System (2016)
BRANZ Appraisal 427 (2007) - GIB Aqualine® Wet Area Systems

GreenTag Certification WWLCG001-001-A-2015 - GreenTag™ GreenRate/Level C for:
- GIB® Standard (10mm & 13mm)

Copies of the above literature are available at

Company:	Winstone Wallboards
Web:	www.gib.co.nz
Telephone:	0800 100 442

Requirements

1.3 NO SUBSTITUTIONS
Substitutions are not permitted to any specified GIB® systems, GIB® system components, GIB® plasterboard, associated GIB® products or GIB® accessories.

1.4 INSTALLER WORK SKILLS AND QUALIFICATIONS
GIB® plasterboard fixers and plasterers to be experienced competent workers, familiar with GIB® plasterboard lining systems installation and finishing techniques. Submit evidence of experience on request. For example:
- National Certificate of Interior Systems; or
- Certified Business member of AWCINZ.

Performance

1.5 INSPECTIONS AND ACCEPTANCE
Allow for inspection of the finished plasterboard surface:
- before applying sealer and
- before applying finish coatings or decorative papers,

so that after assessment of the type and/or angle of illumination and its effect on the completed decorative treatment, group approval and acceptance of the surface can be given.

KDC - Approved Building Consent Document - BC170701 - Pg 15 of 91 - 11/01/2018 - kjn

2. PRODUCTS

Materials

2.1 GIB® PLASTERBOARD
Gypsum plaster core encased in a face and backing paper formed for standard and water resistance use to AS/NZS 2588.

GIB Aqualine® wet area plasterboard

Components

2.2 SCREWS
GIB® Grabber® drywall type screws as follows:

Grabber® type	Used for fixing:
High Thread	GIB Ezybrace® or Standard systems to timber
Self Tapping	Standard systems to light gauge steel or timber
Dual Thread Screws	GIBFix®, GIB Ezybrace®, or Standard systems, to light gauge steel or timber
Wafer Head Needle Tip	Light gauge metal to timber not directly under plasterboard
Pancake Head Drill Tip	Light gauge metal to light gauge metal directly under plasterboard

Refer to GIB® requirements for appropriate details.

2.3 TAPE ON TRIMS AND EDGES
GIB® Goldline™ tape-on trims
GIB® UltraFlex® high impact corner mould
GIB® Levelline® Tape on Trim

2.4 METAL ANGLE TRIMS
GIB® galvanized steel slim angle trims.

Accessories

2.5 ADHESIVE
Timber frame and/or steel frame:
GIBFix® One ultra low VOC water based wallboard adhesive
GIBFix® All-Bond solvent based wallboard adhesive

2.6 JOINTING COMPOUND

Bedding compound:	GIB Tradeset®, GIB Lite Blue®, GIB MaxSet®, GIB ProMix® All Purpose, GIB Plus 4®
Finishing compound:	GIB ProMix® All Purpose, GIB® Trade Finish®, GIB® Trade Finish® Lite, GIB ProMix® Lite, GIB® U-Mix, GIB Plus 4®, GIB Trade Finish® Multi
Cove:	GIB-Cove® Bond

2.7 JOINTING TAPE
GIB® paper jointing tape.

2.8 GAP FILLER
GIB® Gap Filler ultra low VOC multi-purpose acrylic flexible filler

3. EXECUTION

Conditions

3.1 STORAGE
Store GIB® plasterboard sheets and accessories in dry conditions stored indoors out of direct sunlight in neat flat stacks on either an impervious plastic sheet or clear of the floor

KDC - Approved Building Consent Document - BC170701 - Pg 16 of 91 - 11/01/2018 - kjn

with no sagging and avoiding damage to ends, edges and surfaces. Reject damaged material. Refer to GIB® Site Guide (Dec 2014).

3.2 LEVELS OF PLASTERBOARD FINISH
Provide the selected plasterboard surfaces to the pre decorative levels of finish specified in AS/NZS 2589.

3.3 CONFIRM LEVELS OF PLASTERBOARD FINISH ACCEPTANCE
Before commencing work, agree in writing upon the surface finish assessment procedure towards ensuring that the quality of finish expectations are reasonable and are subsequently obtained and acceptable.

Do not apply decorative treatment until it is agreed in writing by the contractor, subcontractors and decorator that the specified plasterboard Level of Finish has been achieved.

"Levels of plasterboard finish" is a tool for specifying the required quality of finish when installing and flush stopping GIB® plasterboard **prior** to the application of a range of decorative finishes under various lighting conditions. Refer to **AS/NZS** 2589.

3.4 SUBSTRATE
Do not commence work until the substrate is plumb, level and to the standard required by the sheet manufacturer's requirements. Refer to GIB® Site Guide (Dec 2014).

3.5 TIMBER FRAME MOISTURE CONTENT
Maximum allowable moisture content to AS/NZS 2589 for timber framing at lining: 18% or less for plasterboard linings. Refer to NZBC E2/AS1 and GIB® Site Guide (Dec 2014).

3.6 PROTECTION
Protect surfaces; cabinetwork, fittings, equipment and finishes already in place from the possibility of water staining and stopping damage. Refer to GIB® Site Guide (Dec 2014).

Application

3.7 LINING WALLS AND CEILINGS GENERALLY
Form to GIB® Site Guide (Dec 2014). Ensure bulk insulation thickness shall not exceed that of the wall framing.

3.8 BOARD ORIENTATION
Minimise joints by careful sheet layout using the largest sheet sizes possible, and generally fixing horizontally. Where part sheets are required for various stud heights they should be positioned so the cut sheet is as low as possible to keep joints below eye level.

3.9 FORM WET AREA SYSTEMS
Form to GIB Aqualine® Wet Area Systems requirements.

3.11 INSTALL TAPE-ON TRIMS
Install to GIB® Goldline™ Tape-on trims literature and/or GIB® Ultraflex high impact corner mould literature.

Finishing

3.12 FINISHING GENERALLY
To GIB® Site Guide (Dec 2014) and AS/NZS 2589.

Completion

3.13 REPLACE
Replace damaged sheets or elements.

3.14 CLEAN DOWN
Clean down completed surfaces to remove irregularities and finally sand down with fine paper to the sheet manufacturer's requirements, to leave completely smooth and clean.

3.15 REMOVE
Remove debris, unused materials and elements from the site.

3.16 LEAVE
Leave work to the standard required by following procedures.

KDC - Approved Building Consent Document - BC170701 - Pg 17 of 91 - 11/01/2018 - kjn

KDC - Approved Building Consent Document - BC170701 - Pg 18 of 91 - 11/01/2018 - kjn

5230 INTERIOR DOORS

1. GENERAL

This section relates to the supply and installation of interior doors.

1.1 RELATED SECTIONS
Refer to glazing section/s for glass type and thickness.

1.2 DOCUMENTS
The following documents are specifically referred to in this section:
NZS 3602 Timber and wood-based products for use in building
NZS 3610 Specification form profiles of mouldings and joinery

2. PRODUCTS

2.1 TIMBER
To NZS 3602.

2.2 PROFILES, FACINGS, SCRIBERS AND ARCHITRAVES
Traditional profiles to NZS 3610. Proprietary profiles and special profiles as detailed. Pencil radius corners of profiled schedules for paint finish.

2.3 DOORS, PAINTED
Doors as scheduled (without clashing strips).

2.4 CAVITY SLIDERS
Doors hung within a proprietary cavity slider frame and complete with brand-matched sliding door gear.

3. EXECUTION

3.1 SITE MEASURE
Confirm framed openings on site for dimension, plumb and straightness prior to fabrication or ordering of timber joinery. Confirm lintel head and sill deflection for sliding or bi-fold door systems is within the manufacturer's specified tolerances. Provide not less than 10mm unless otherwise required.

3.2 EXECUTION GENERALLY
Manufacture to the methods, practices and processes contained in the unit standards for the National Certificate in Carpentry and the National Certificate in Joinery (cabinetry, exterior joinery, stairs).

3.3 FACTORY FIT HARDWARE
Factory fit the following where specified: -
- Hinges

3.4 FACTORY FINISHING
Before delivery to site: -
- Brace square and provide protection to assemblies during delivery to site. Where factory glazed, indicate the presence of transparent glasses with whiting, tape or signs compatible with the glass type.

Internal doors

3.5 INTERNAL JOINERY FRAMES
Fabricate as detailed. Wedge and rigidly fix in place without distortion, plumb, and true to line and face. Pre drill for fixings through frame. Countersink and plug frames scheduled for clear finish.

KDC - Approved Building Consent Document - BC170701 - Pg 19 of 91 - 11/01/2018 - kjn

3.6 DOOR FRAMES, SOLID REBATED
Fabricate as detailed. Hang doors to operate freely on hinges, sliding, or bi-fold gear and to the door manufacturer's requirements. Pre drill for fixings through frame. Countersink and plug frames scheduled for clear finish. Fit hardware.

3.7 DOOR LINERS
Heads and jambs finished minimum 18mm, with 10mm planted door stops. Width to match width of lined walls. Hang doors on hinges, sliding, or sliding-folding gear to the door manufacturer's requirements and to operate freely. Countersink and plug frames scheduled for clear finish. Fit hardware.

3.8 CAVITY SLIDERS
Install in accordance with the door manufacturer's requirements, allowing for removal of top trim for maintenance.

Completion

3.9 CHECK
Check and adjust operation of all sashes, doors, hardware and furniture.

3.10 TEMPORARY PROTECTION
On completion remove any temporary protection and leave ready for following work.

KDC - Approved Building Consent Document - BC170701 - Pg 20 of 91 - 11/01/2018 - kjn

5433E ECOPLY® FLOORS

1. GENERAL

This section relates to the use of plywood sheets for floors.

Documents

1.1 DOCUMENTS
The following documents are specifically referred to in this section:

NZBC B1/AS1	Structure
NZS 1170.5	Structural design actions - Earthquake actions - New Zealand
AS/NZS 1604.3	Specification for preservative treatment - Plywood
AS/NZS 2269.0	Plywood - structural - specifications
NZS 3604	Timber-framed buildings

Documents listed above and cited in the clauses that follow are part of this specification. However, this specification takes precedence in the event of it being at variance with the cited document.

1.2 MANUFACTURER'S DOCUMENTS
CHH Woodproducts documents relating to work in this section are:
Ecoply® Structural plywood properties and application manual (March 2009)
Ecoply® Specification and installation guide December 2011

Copies of the above literature are available from Carter Holt Harvey Woodproducts Ltd
Web: www.chhwoodproducts.co.nz/
Telephone: 0800 326 759

1.3 NO SUBSTITUTIONS
Substitutions are not permitted to any specified system, or associated components and products.

Performance

1.4 STRUCTURAL FIXINGS, EARTHQUAKE
Use fixings and methods capable of sustaining the loads appropriate to the area as set out in NZS 3604 and as required by NZS 1170.5.

2. PRODUCTS

Materials

2.1 ECOPLY® FLOORING (T&G) F11 GRADE
Radiata pine veneer ply to AS/NZS 2269.0, CD grade face sanded with blue plastic tongue and grooved long edges and H3.2 CCA treated to AS/NZS 1604.3 when used as a waterproofing membrane substrate.

Components

2.2 SCREWS IN TIMBER
Stainless steel, counter-sunk. Refer to CHH Woodproducts requirements for size and use.
19-21mm plywood: No. 10 x 50mm
25mm plywood: No. 10 x 50mm

2.3 ADHESIVE
Polyurethane adhesive to American Plywood Association specification AFG 01.

KDC - Approved Building Consent Document - BC170701 - Pg 21 of 91 - 11/01/2018 - kjn

3. EXECUTION

Conditions

3.1 HANDLE
Handle sheets carefully and reject those with damaged faces or edges.

3.2 STORE
Store sheets in stacks clear of the ground, supported without sagging on evenly spaced horizontal bearers. Protect from damage and weather.

3.3 SUPPORT FRAMING
Ensure support framing is completed to CHH Woodproducts stated requirements for laying plywood sheets.

Application

3.4 SUPPORT EDGES AND JOINTS
Fully support edges and joints on square edged sheets.

3.5 ADHESIVE FIXING
Apply a 10mm adhesive bead to joists.

3.6 FIXINGS
Minimum 7mm, maximum 15mm from the edge, 150mm centres along edges and 300mm centres on intermediate supports.

3.7 FIXING ECOPLY PLYWOOD SHEETS
Fix sheets to CHH Woodproducts requirements. Lay sheets in a staggered layout, face-grain of sheet at right-angles to support and with sheets in square, true alignment and plane with a 2mm expansion gap for square edge sheets. Nail fix to CHH Woodproducts requirements.

3.8 ADHESIVE FIXING PLYWOOD SHEETS
Fix sheets to CHH Woodproducts requirements. Lay sheets in a staggered layout, face-grain of sheet at right-angles to support and with sheets in square, true alignment and plane with a 2mm expansion gap for square edge sheets. Nail and adhesive fix to CHH Woodproducts requirements.

Completion

3.9 PROTECTION
Protect work from the weather until it is covered, coated or sealed.

3.10 REPLACE
Replace damaged or marked elements.

3.11 LEAVE
Leave work to the standard required by following procedures.

3.12 REMOVE
Remove all debris, unused materials and elements from the site.

KDC - Approved Building Consent Document - BC170701 - Pg 22 of 91 - 11/01/2018 - kjn

6411J JACOBSEN VINYL SURFACING

1. GENERAL

This section relates to the supply and installation of Jacobsen vinyl surfacing to walls.
It includes:
- PVC sheet

Documents

1.1 MANUFACTURER/SUPPLIER DOCUMENTS
Manufacturer's and Jacobsen Ltd documents relating to this part of the work:

Manufacturer/supplier contact details
Company: Jacobsen
Web: www.jacobsens.co.nz
Telephone: 0-9-574 0640 Auckland
0-4-495 4300 Wellington
0-3-366 4153 Christchurch

Warranties

1.2 WARRANTY - MANUFACTURER/SUPPLIER
Provide a material manufacturer/supplier warranty:
5 years: Materials

- Provide this warranty on the standard form in the general section 1237WA WARRANTY AGREEMENT.
- Commence the warranty from the date of practical completion of the contract works.

Refer to the general section 1237 WARRANTIES for additional requirements.

1.3 WARRANTY - INSTALLER/APPLICATOR
Provide an installer/applicator warranty:
1 year: Execution

- Provide this warranty on the standard form in the general section 1237WA WARRANTY AGREEMENT.
- Commence the warranty from the date of practical completion of the contract works.

Refer to the general section 1237 WARRANTIES for additional requirements.

Requirements

1.4 NO SUBSTITUTIONS
Substitutions are not permitted to any specified system, or associated components and products.

1.5 QUALIFICATIONS
Layers to be experienced competent workers, familiar with the materials and the techniques specified.

2. PRODUCTS

Materials

2.1 VINYL SHEET
Tarkett, with factory applied PUR (polyurethane) to ensure a low maintenance system requiring no sealers or polish.

2.2 VINYL SHEET WALLCOVERING
1.5mm Tarkett Protectwall.

KDC - Approved Building Consent Document - BC170701 - Pg 23 of 91 - 11/01/2018 - kjn

2.3 TRIMS AND EDGING
Black 2.0mm bevel edge strip.

2.4 WALL AND FLOOR VINYL JOINING STRIP
Jacobsen white PVC floor to wall finishing strip.

Accessories

2.5 ADHESIVE
UZIN KE2000S or Jacobsen ProBond acrylic floor and wall adhesive.

2.6 PRIMER AND SEALER
To the adhesive manufacturer's requirements for the particular substrate.

2.7 FLOOR LEVELLING COMPOUND
Roberts floor levelling compound.

2.8 THERMOWELDING
Manufacturer supplied colour matched weld rod using the Tarkett weld nozzle.

2.9 CHEMICAL WELDING
Chemical weld heterogeneous vinyl to manufacturer's instructions. Obtain a copy of instructions and follow specified procedures.

2.10 MASONITE UNDERLAY
CSR Masonite underlay, 5.5mm thick.

3. EXECUTION

Conditions

3.1 GENERALLY
To manufacturer's requirements and NZS/AS 1884.

3.2 STORAGE
Accept rolls of sheet, packages of tiles and accessories undamaged and dry. Store rolls upright with other material on level surfaces in non-traffic, non-work areas that are enclosed, clean and dry.

3.3 HANDLING
Avoid distortion, stretching, marking and damage to edges while shifting unrolling and handling sheet, tiles and accessories. Do not use damaged material.

3.4 PREPARATION
Check that each colour supplied is from the same batch. Follow the vinyl manufacturer's requirements for preparatory conditioning of rolls and working temperatures and conditions before, during and after laying the selected vinyl. Protect work from solar heat gain and switch off under-floor heating during and for 48 hours either side of the work period.

3.5 DO NOT START
Do not start work before the building is enclosed, wet work is complete, doors are hung and lockable, finishes and trim complete and good lighting is available.

3.6 INSPECT
Inspect the substrate to ensure it is a suitable finish

3.7 PROTECTION
Protect adjoining work surfaces and finishes during the vinyl installation.

KDC - Approved Building Consent Document - BC170701 - Pg 24 of 91 - 11/01/2018 - kjn

3.8 LAYING GENERALLY
Carry out the whole of this work to NZS/AS 1884, BRANZ BU 330 and the flooring manufacturer's requirements.

3.9 TECHNIQUE
Before beginning the installation confirm the proposed layout of material, location of seams and other visual considerations of the finished work.

Application - substrate preparation

3.10 WALL SURFACES
Clean off surface contamination, carry out minor repairs as possible by this trade and bring to a smooth even surface.

3.11 APPLYING PRIMER OR SEALER FOR VINYL SHEET
Prime and/or seal porous plaster, concrete and timber substrates to the adhesive manufacturer's requirements.

Application - to walls

3.12 APPLYING PRIMER OR SEALER FOR VINYL SHEET
Prime and/or seal porous plaster, concrete and timber substrates using oil pigmented paint sealer to the adhesive manufacturer's requirements.

3.13 APPLYING WALL SHEET
Adhesive fix Wallgard either vertical or T-method, using UZIN KE2000S , ensuring corners are wrapped and joins are no closer than 200mm from internal or external corners. Cut Wallgard neatly to recess on the Floor/Wall Finishing Strip, and chemically weld this joint using Werner Mueller Type C Welding Compound.

3.14 THERMOWELDING WALL VINYL
Hand groove and thermo-weld seams, heating the sheet and weld rod using Tarkett Speed Tip Nozzle to a sufficient temperature to melt and fuse them together in a single mass. Trim the weld to leave a smooth, flush surface with the sheet.

3.15 FLOOR TO WALL FINISHING STRIP
Adhere to walls in a true, straight line using contact adhesive. Roll immediately using a seam roller to ensure maximum bond strength is achieved.

Completion

3.16 REPLACE
Replace damaged or marked elements.

3.17 CLEAN COMMERCIAL VINYL FLOORING
Obtain a copy of the Tarkett cleaning instructions and carry out initial clean to those instructions.

3.18 REMOVE
Remove debris, unused materials and elements from the site.

3.19 PROTECT
Protect completed work from damage for the period between completion of laying and completion of the contract works, or until acceptance/sign-off by ~.

3.20 LEAVE
Leave work to the standard required by following procedures.

KDC - Approved Building Consent Document - BC170701 - Pg 25 of 91 - 11/01/2018 - kjn

6412J JACOBSEN TARKETT LINOLEUM

1. GENERAL

This section relates to floor preparation (thin sheet underlays and floor levelling compound) and the supply and installation of **Tarkett Linoleum 2.5mm** homogeneous floor covering with jute backing.

Documents

1.1 DOCUMENTS
The following documents are specifically referred to in this section:

NZBC D1/AS1	Access Routes
NZS/AS 1884	Floor coverings - Resilient sheet and tiles - Installation practices
AS/NZS 3661.1	Slip resistance of pedestrian surfaces - Requirements
BRANZ BU 330	Thin flooring materials - 2 preparation and laying

1.2 MANUFACTURER/SUPPLIER DOCUMENTS
Manufacturer's and supplier's documents relating to this part of the work:
- Linoleum installation
- Linoleum maintenance
- Linoleum technical information
- Linoleum colours: Veneto, allegro and etrusco

Manufacturer/supplier contact details

Company:	Jacobsen
Web:	www.jacobsens.co.nz
Email:	4info@jcs.co.nz
Freephone:	0800 800 460
Freefax:	0800 800 461

Warranties

1.3 WARRANTY - MANUFACTURER/SUPPLIER
Provide a material manufacturer/supplier warranty:
5 years: Materials

- Provide this warranty on the standard form in the general section 1237WA WARRANTY AGREEMENT.
- Commence the warranty from the date of practical completion of the contract works.

Refer to the general section 1237 WARRANTIES for additional requirements.

1.4 WARRANTY - INSTALLER/APPLICATOR
Provide an installer/applicator warranty:
1 years: Execution

- Provide this warranty on the standard form in the general section 1237WA WARRANTY AGREEMENT.
- Commence the warranty from the date of practical completion of the contract works.

Refer to the general section 1237 WARRANTIES for additional requirements.

Requirements

1.5 QUALIFICATIONS
Layers to be experienced, competent trades people familiar with the materials and techniques specified.

1.6 NO SUBSTITUTIONS
Substitutions are not permitted to any of the specified systems, components and associated products listed in this section.

KDC - Approved Building Consent Document - BC170701 - Pg 26 of 91 - 11/01/2018 - kjn

Performance

1.7 SLIP RESISTANCE FOR ACCESS ROUTES
Slip resistance to comply with NZBC acceptable solution D1/AS1 2.0 Level access routes and 3.0 Ramps.
- when in place on a level access route, to have a mean coefficient of friction (μ) not less than 0.4 when tested in accordance with AS/NZS 3661.1.
- when in place on a sloping access route, to have a coefficient of friction (μ) not less than 0.4 + 0.0125S (S = slope of surface expressed as a percentage).

Provide evidence that the vinyl complies with the standard of performance specified.

1.8 CERTIFY SLIP RESISTANCE
Provide certificates and any other evidence at the time of selection/supply that the vinyl complies with NZBC verification method D1/VM1 and acceptable solution D1/AS1.

2. PRODUCTS

2.1 MASONITE UNDERLAY
CSR Masonite underlay, 5.5mm thick.

2.2 LINOLEUM SHEET
Tarkett Linoleum, with XF finish to ensure a low maintenance system.

2.3 LINOLEUM COVINGS
Cove flooring using a 25mm radius cove former or a preformed linoleum set in cove.

2.4 COVE CAPPING
Jacobsen PVC top cap to top of coved linoleum.

2.5 ADHESIVE
Uzin Linoleum Adhesive LE44.

2.6 THERMO-WELDING
Manufacturer supplied, colour matched welding rod, using the Tarkett speed weld nozzle.

3. EXECUTION

3.1 GENERALLY
To manufacturer's requirements and NZS/AS 1884.

Preparing substrate

3.3 NEW TIMBER BOARD OR PARTICLEBOARD
Clear substrate of debris, clean off surface contamination and carry out surface repairs using Roberts levelling compounds. Carefully feather out at perimeters of repaired areas. Grind smooth, then vacuum to remove all dust. Check for moisture content and do not commence final sanding or laying until readings for the whole area show a moisture content of: -
- 8-12% for air conditioned buildings
- 10-14% for intermittently heated buildings
- 12-16% for unheated buildings

3.5 TIMBER BOARD OR PARTICLEBOARD, LAYING MASONITE UNDERLAY
Underlay using 5.5mm Masonite with joints staggered and with a 0.4mm gap between sheets and 3mm gap at all perimeters. Use 22mm narrow crown staples at 150mm centres throughout the whole sheet and 75mm apart, 10mm in from the edges of the sheets. Punch staples 0.4mm below the surface and sand joins level.

KDC - Approved Building Consent Document - BC170701 - Pg 27 of 91 - 11/01/2018 - kjn

3.6 STORAGE
Accept rolls of **Tarkett Linoleum**, packages of tiles and accessories undamaged and dry. Store rolls upright with other material on level surfaces in non-traffic, non-work areas that are enclosed, clean and dry.

3.7 HANDLING
Avoid distortion, stretching, marking or damage to edges while shifting, unrolling and handling sheet, tiles and accessories. Do not use damaged material.

3.8 PREPARATION
Check that each colour supplied is from the same batch. Follow the linoleum manufacturer's requirements for conditioning of rolls and the working temperatures and conditions before, during and after laying. Protect work from solar heat gain and switch off under-floor heating during and for 48 hours either side, of the work period.

3.9 DO NOT START
Do not start work before the building is enclosed, wet work complete, doors hung and lockable, finishes and trim complete, and good lighting available.

3.10 INSPECT
Inspect the substrate to ensure it is of the standard required for work in this section. Commencement of the work means the substrate is accepted by the floor layer as satisfactory.

3.11 LAYING
Carry out the whole of this work to NZS/AS 1884, BRANZ BU 330 and the flooring manufacturer's requirements.

3.12 TECHNIQUE
Before beginning the installation confirm the proposed layout of material, location of seams and other visual considerations of the finished work.

Linoleum floor laying

3.13 ADHESIVE APPLICATION
Apply the adhesive using the correct notched trowel. Follow requirements for open time, taking note of substrate porosity, ambient temperature and relative humidity. Remove excess adhesive as the work proceeds using required techniques.

3.14 LAYING LINOLEUM SHEET
Roll out, cut, leave to condition and install sheet linoleum to the manufacturer's requirements. Ensure there are no air bubbles or twisting, that the seams are kept clear of adhesive, and immediately the sheet is adhered roll with a 68kg roller.

3.15 THERMO-WELDING SHEET
Machine groove and thermo-weld all seams in specified areas, using the Tarkett Weld nozzle, heating the sheet and weld rod to a sufficient temperature to melt and fuse them together into a single mass. Trim the weld to leave a smooth, flush surface with the sheet. Thermo-welding to include internal and external mitres.

3.16 CROSS JOINS
Plan and allow cuts to avoid cross joins. Obtain written confirmation before proceeding if cross joins are unavoidable.

3.17 COVING
Cove flooring to the specified height and finish off as detailed.

3.18 COMPLETE MITRES
Thermo-weld all internal and external mitres.

3.19 LEAVE FLOORING
Leave flooring surfaces free of adhesive, dirt and debris. Vacuum off, damp mop with a low foam neutral detergent with a pH level of 7 to 8. Rinse and dry buff with a high speed machine using a red pad.

Completion

3.20 ACCEPTANCE
Arrange for a final inspection of the completed work by the owner. Protect all surfaces until the completion of the works.

3.21 REMOVE
Remove unused materials from the site.

KDC - Approved Building Consent Document - BC170701 - Pg 28 of 91 - 11/01/2018 - kjn

KDC - Approved Building Consent Document - BC170701 - Pg 29 of 91 - 11/01/2018 - kjn

7120 HOT & COLD WATER SYSTEM

1. GENERAL

This section relates to piped potable water supply systems from the network utility supply authority water main to designated points and appliances, the installation of hot water heating appliances, distributing piped hot water to other appliances, and the installation of valves.

1.1 RELATED WORK
Refer to 7151 SANITARY FIXTURES, TAPWARE & ACCESSORIES for sanitary fixtures and tapware selections.

Documents

1.2 DOCUMENTS
The following documents are specifically referred to in this section:

NZBC B2/AS1	Durability
NZBC G12/AS1	Water supplies
AS 1432	Copper tubes for plumbing, gasfitting and drainage applications
AS/NZS 2492	Cross Linked Polyethylene (PE-X) pipe for pressure applications
AS/NZS 2537.2	Mechanical joining fittings for use with crosslinked Polyethylene (PE-X) for pressure applications - Plastics piping systems for hot and cold water installations - Crosslinked Polyethylene (PE-X) - Fittings
AS/NZS 2642.1	Polybutylene pipe systems - Polybutylene (PB) pipe extrusion compounds
AS/NZS 2642.2	Polybutylene pipe systems - Polybutylene (PB) pipe for hot and cold water applications
AS/NZS 2642.3	Polybutylene pipe systems - Mechanical jointing fittings for use with polybutylene (PB) pipes for hot and cold water applications
AS/NZS 3500.1:2003	Plumbing and drainage - Water services
AS/NZS 3500.4: 2003	Plumbing and drainage - Heated water services
AS/NZS 3500.5	Plumbing and drainage - Housing installations
NZS 3501	Specification for copper tubes for water, gas and sanitation
AS 3688	Water supply - Metallic fittings and end connectors
AS/NZS 4130	Polyethylene (PE) pipes for pressure applications
AS/NZS 5601.1: 2010	Gas installations - general installations
DIN 8077	Polypropylene (PP) Pipes - PP-H, PP-B, PP-R, PP-RCT - Dimensions
DIN 8078	Polypropylene (PP) Pipes - PP-H, PP-B, PP-R, PP-RCT - General quality requirements and test

Plumbers, Gasfitters and Drainlayers Act 2006

Requirements

1.3 QUALIFICATIONS
Plumbers to be experienced competent workers, familiar with the materials and the techniques specified. Carry out all work under the direct supervision of a certifying plumber under the Plumbers, Gasfitters and Drainlayers Act 2006.

1.4 INFORMATION FOR OPERATION AND MAINTENANCE
Provide the following general operation and maintenance information as electronic PDF format documents:

Provide this information prior to practical completion.

Warranties

1.5 WARRANTY
Provide warranty for:
2 years: For the supply and installation of the plumbing system and fixtures

KDC - Approved Building Consent Document - BC170701 - Pg 30 of 91 - 11/01/2018 - kjn

- Provide the warranty in the standard form in the general section 1237WA WARRANTY AGREEMENT.
- Commence the warranty from the date of practical completion of the contract works.

Performance

1.6 TESTING - TO NZBC G12/AS1
Test to NZBC G12/AS1, 7.5, **Watertightness**, for hot and cold water.
- Test to a pressure of1500 kpa for period not less than 15 minutes.

Confirm the timing before carrying out any tests. Supply potable water and the apparatus needed.
Slowly fill service pipes with water to exclude air. Test and ensure there is no measurable loss of pressure for the minimum period. Slowly fill distribution pipes with water to exclude air. Ensure that with draw-off taps closed the system must remain water-tight.

1.7 STANDARDS FOR COPPER PIPE
This section is based on NZS 3501 to NZBC G12/AS1 for the supply of copper pipe and fittings.
If the specified pipe is not available, pipes to AS 1432 and fittings to AS 3688 can be used, under NZBC G12/VM1 if written BCA approval is obtained by the plumber (both Standards are referenced in AS/NZS 3500.1:2003). If these Standards are used adjust diameters so that bore sizes are not compromised, otherwise comply with all other aspects of this section.
The whole project to be either to NZS 3501 or AS 1432.

2. PRODUCTS

2.1 COPPER PIPE
To NZS 3501 complete with copper-alloy compression fittings or crox type joints and seal ring compression joints complete with fittings and accessories brand matched to the pipe manufacturer's requirements with durability to NZBC B2/AS1, Table 1 and NZBC G12/AS1, Table 1.

2.2 PVC-U PIPE
Complete with fittings and accessories brand matched to the pipe manufacturer's requirements with durability to NZBC B2/AS1 Durability, Table 1 and NZBC G12/AS1, Table 1.

2.3 POLYBUTYLENE PIPE
Polybutylene tubing to AS/NZS 2642.1, AS/NZS 2642.2 and AS/NZS 2642.3 complete with fittings and accessories brand-matched with durability to NZBC B2/AS1 Durability, table 1 and NZBC G12/AS1, table1.

2.4 POLYETHYLENE PIPE
To AS/NZS 4130 Series 1 complete with fittings and accessories brand matched to the pipe manufacturer's requirements with durability to NZBC B2/AS1, table 1 and NZBC G12/AS1, table1.

2.5 POLYPROPYLENE RANDOM WATER PIPE
PP-R Polypropylene pipes to DIN 8077 and DIN 8078 complete with fusion welded fittings and accessories brand-matched to the pipe manufacturer's requirements with durability to NZBC B2/AS1, table 1 and NZBC G12/VM1.

2.6 CROSS LINKED POLYETHYLENE PIPE
Cross Linked Polyethylene Pipe to AS/NZS 2492 and fittings to AS/NZS 2537.2 with a minimum pressure capability of 1200 kPa complete with fittings and accessories brand matched to the pipe manufacturer's requirements with durability to NZBC B2/AS1, table 1 and NZBC G12/VM1.

2.7 TEMPERING VALVE
Tempering valve to NZS 4617 to NZBC G12/AS1.

KDC - Approved Building Consent Document - BC170701 - Pg 31 of 91 - 11/01/2018 - kjn

3. EXECUTION

3.1 EXECUTION GENERALLY
Generally carry out the whole of this work and tests to NZBC G12/VM1 or NZBC G12/AS1.

3.2 HANDLE AND STORE
Handle and store pipes, fittings and accessories to avoid damage. Store on site, under cover on a clean level area, stacked to eliminate movement and away from work in progress.

Store tapware in a shelved, dry and securely locked area. Retain tapware in the manufacturer's original packaging, complete with all fixings and installation instructions. Label each unit separately with its space/fixture number to match.

3.3 CORE HOLES AND SLEEVES
Review location and fit core holes and sleeves as needed throughout the structure in conjunction with the boxing, reinforcing and placing of concrete. Strip core holes and make good after installation of pipework.

3.4 CONCEAL
Conceal pipework within the fabric of the building unless detailed otherwise. Satin finish chrome plate exposed work, complete with matching ferrule at the surface penetration.

3.5 CORROSION
Separate all metals subject to electrolytic action from each other and from treated timber, concrete and other lime substances by space, painting of surfaces, taping, or separator strips.

3.6 THERMAL MOVEMENT
Accommodate movement in pipes resulting from temperature change by the layout of the pipe runs, by expansion joints and by sleeving through penetrations.

3.7 PIPE SIZE
Flow rates to each outlet to be no less than those given in NZBC G12/VM1 or NZBC G12/AS1, table 3, Acceptable flow rates to sanitary fixtures. Pipe size as determined in NZBC G12/AS1, table 4, Tempering valve and nominal pipe diameters.

3.8 ELECTROLYTIC ACTION
Avoid electrolytic action by eliminating contact or continuity of water between dissimilar metals.

3.9 EXCAVATE
Excavate for the water main to a firm, even trench base in straight runs. Allow to backfill.

Application - Jointing

3.10 JOINTING COPPER PIPE
Braze pipe, fit alloy compression fittings, crox type joints and seal ring compression joints to NZBC G12/AS1.

3.11 JOINTING PVC-U PIPE
Solvent welded joints using spigots and sockets, flanged joints and seal ring compression joints to NZBC G12/AS1.

3.12 JOINTING POLYBUTYLENE PIPE
Aluminium clamped, seal ring compression or push fit "O" ring seal jointing to pipe system manufacturer's requirements.

3.13 JOINTING POLYETHYLENE PIPE
Seal ring compression joints and electrofusion to NZBC G12/AS1.

KDC - Approved Building Consent Document - BC170701 - Pg 32 of 91 - 11/01/2018 - kjn

3.14 JOINTING POLYPROPYLENE PIPE
Fusion weld joints to manufacturer's requirements.

Application - Pipework installation

3.16 POTABLE WATER SUPPLY PIPEWORK INSTALLATION
From connection point, run pipes complete with all fittings, support and fixing, joins and install to manufacturers specifications. Size the pipes and branches in straight runs to deliver the acceptable flow rate to NZBC G12/VM1 or NZBC G12/AS1, table 3, Acceptable flow rates to sanitary fixtures at each outlet. Allow for the expected concurrent use of adjoining fixtures and size the piping layout to eliminate loss of pressure at any point by simultaneous draw-off. Pipework support spacing to be firmly fixed and buffered to eliminate noise and hammer, with preformed tee-connection take-offs and branches, with machine made 3 diameter bends, complete with necessary valves and fittings. Conceal pipework and pressure test before the wall linings are fixed.

3.17 HOT WATER PIPEWORK
Use a take-off spigot to give separate branches to each fitting, lay out pipes with support spacing to NZBC G12/VM1 or NZBC G12/AS1, table 7 Water supply pipework support spacing. Fix firmly and buffer to eliminate noise and hammer, with preformed tee-connection take-offs and branches, and preformed 3 diameter bends, complete with all necessary valves and fittings

Lag all pipes with rigid insulation to the manufacturer's requirements and G12/VM1 or G12/AS1.

3.18 EQUIPOTENTIAL BONDING
Earth metallic water supply pipe and metallic sanitary fixtures to NZBC G12/AS1, 9.0.

3.19 IN-LINE FILTER
Install an in-line filter immediately adjacent to the main isolating valve at the point of entry to the building, in an accessible position to allow for easy cleaning.

Installation - Valves

3.29 INSTALLING APPLIANCE ISOLATING VALVES - CONCEALED
Install isolating valves for appliances in accessible positions. Locate in adjacent cupboards and position to allow for easy connection and operation.

Completion

3.30 LABEL
Label all pipework with permanent adhesive markers at 3 metre minimum intervals.

3.31 CLEAN IN-LINE FILTER
Clean all in-line filters on completion of works.

3.32 REPLACE
Replace damaged or marked elements.

3.33 LEAVE
Leave work to the standard required by following procedures.

3.34 REMOVE
Remove debris, unused materials and elements from the site.

KDC - Approved Building Consent Document - BC170701 - Pg 33 of 91 - 11/01/2018 - kjn

7151 SANITARY FIXTURES, TAPWARE & ACCESSORIES

1. GENERAL

This section relates to the supply and installation of sanitary fixtures, tapware and sanitary accessories.

1.1 RELATED WORK
Refer to 7120 or 7123 HOT AND COLD WATER SYSTEM for hot water cylinders.
Refer to the electrical section/s for electrical connection of accessories.

Documents

1.2 DOCUMENTS
The following documents are specifically referred to in this section:

NZBC E3/AS1 Internal moisture
NZBC F2/AS1 Hazardous building materials
NZBC G1/AS1 Personal hygiene
NZBC G12/AS1 Water supplies
NZBC G13/AS1 Foul water
NZBC G13/AS3 Plumbing and drainage
AS/NZS 1730 Washbasins
AS/NZS 3500.1:2003 Plumbing and drainage - water services
AS/NZS 3500.2:2003 Plumbing and drainage - sanitary plumbing and drainage
AS/NZS 3662 Performance of showers for bathing
Plumbers, Gasfitters and Drainlayers Act 2006

Documents listed above and cited in the clauses that follow are part of this specification. However, this specification takes precedence in the event of it being at variance with the cited document.

Requirements

1.3 QUALIFICATIONS
Plumbers to be experienced competent workers, familiar with the materials and the techniques specified. Carry out all work under the direct supervision of a Certifying Plumber under the Plumbers, Gasfitters and Drainlayers Act 2006.

2. PRODUCTS

2.2 TAPWARE

3. EXECUTION

3.1 QUALITY STANDARDS INCLUDING NZBC G13/AS1
Installation work to comply with NZBC G1/AS1, NZBC G12/VM1, NZBC G12/AS1, NZBC G13/AS1 and the fixture manufacturer's requirements.

3.2 SUBSTRATE
Ensure substrate and fixings will allow work of the specified standard.

3.3 CO-ORDINATION
Do not proceed if the points of supply and drainage services do not match the points of the fixtures without force or distortion.

3.4 INSTALLATION REQUIREMENTS INCLUDING NZBC G13/AS1
Install to NZBC G1/AS1, NZBC G12/VM1, NZBC G12/AS1, NZBC G13/AS1, NZBC E3/AS1 and to the fixture manufacturer's installation requirements for each component. Carry out preparatory and assembly work, including connections to supply and drainage services and the application of slurries and sealants in sequence.

KDC - Approved Building Consent Document - BC170701 - Pg 34 of 91 - 11/01/2018 - kjn

Seal between all sanitary fixtures and wall linings, fixtures and the tops they are in, the tops and wall linings, to NZBC E3/AS1, 3.2.2. Fixtures include baths, basins, tubs or sinks, Tops include, vanities, bath surrounds, sink benches, etc, and there upstands.

3.5 PROVIDE SUPPORT
Confirm fixing points needed for each unit and provide solid blocking at each fixing bracket location.

Installation - Basins

3.11 INSTALLING VANITIES - INTEGRAL BASINS
Install in accordance with the manufacturer's requirements. Connect to supply and drains through trap to the drainage system. Seal top and upstand to wall surface to comply with NZBC E3/AS1.

Installation - Showers

3.12 INSTALLING SHOWER FITTINGS
Shower waste, mixer and rose to be install to NZBC G1/AS1 and to AS/NZS 3662.

Installation - Miscellaneous

3.18 INSTALLING SANITARY FIXTURES & ACCESSORIES - PEOPLE WITH DISABILITIES
Install fixtures to NZBC G1/AS1: Part 3 and Part 4 and to comply with the relevant layouts shown in Figures 5,6,7,8 and 9. Provide number of facilities in accordance with NZBC G1/AS1 tables 1, and 2.

Application - tapware

3.19 GENERAL
To AS/NZS 3500.1 dated 2003 and in accordance with the manufacturer's requirements. Maintain safe water temperatures to comply with NZBC G12/AS1.

Application - sanitary accessories

3.20 INSTALLING ACCESSORIES
Fit specified fittings firmly in place at required dimensions relative to floor and adjoining sanitaryware fittings, all plumb and level.

3.21 LOCATE
Locate units at heights and/or locations shown on the drawings, or as required to comply with NZBC G1/AS1. For any dimension not shown or known, request direction before proceeding.

3.22 CUTTING AND FITTING
Where cutting and fitting of the substrate is necessary for installing any unit, carry out this work before the painting or finishing of that surface. Remove any hardware when required for painting, placing it in the packaging or carton originally supplied and returning it to the secure store until ready for re-installation.

3.23 INSTALLING UNITS
Install each unit in accordance with the proprietary fixture manufacturer's requirements, using the templates and tools supplied or recommended by them. Set units level, plumb and true to line and required location, with moving parts and actions freely and easily operating. Do not make any modifications to supplied units.

KDC - Approved Building Consent Document - BC170701 - Pg 35 of 91 - 11/01/2018 - kjn

Completion

3.24 REPLACE
Replace damaged or marked elements.

3.25 PROTECTIVE COVERINGS
Leave fixtures, fittings and accessories clean and unblemished with stickers and protective coverings removed, with supply and drainage connections and all parts fully operating and working. Leave the whole of this work free of blemishes, undamaged and to the standard of finish required for following work.

3.26 REMOVE
Remove debris, unused materials and elements from the site.

KDC - Approved Building Consent Document - BC170701 - Pg 36 of 91 - 11/01/2018 - kjn

7673 SPLIT UNIT HEAT PUMP SYSTEMS

1. GENERAL

This section relates to heat pump air conditioning systems.

1.1 ABBREVIATIONS AND DEFINITIONS
The following abbreviations apply specifically to this section:

L10 :	Centile Level, sound level that is equalled or exceeded for 10% of the time.
HFC:	Hydro-fluorocarbon
mm Hg:	mm mercury - unit of pressure
NIWA	National Institute of Water and Atmospheric Research
ASHRAE	American Society of Heating and Air Conditioning Engineers
IRHACE	Institute of Refrigeration, Heating and Air Conditioning Engineers

Documents

1.2 DOCUMENTS
The following documents are specifically referred to in this section:

NZBC E2/AS1	External Moisture
NZBC G4/AS1	Ventilation
AS 1324.2	Air filters for use in general ventilation and air conditioning - methods of test
AS 1397	Continuous hot-dip metallic coated steel sheet and strip - Coatings of zinc and zinc alloyed with aluminium and magnesium
AS/NZS 1571	Copper - seamless tubes for air conditioning and refrigeration
AS/NZS 2107	Acoustics - Recommended design sound levels and reverberation times for building interiors
AS/NZS 3666.1	Air handling and water systems of buildings - Microbial control - Design, installation and commissioning
AS/NZS 3823.1.1	Performance of electrical appliances - Airconditioners and heat pumps - Part 1.1: Non-ducted airconditioners and heat pumps - Testing and rating for performance
AS/NZS 3823.1.2	Performance of electrical appliances - Airconditioners and heat pumps - Part 1.2: Ducted airconditioners and air-to-air heat pumps - Testing and rating for performance
AS/NZS 3823.2	Performance of electrical appliances - Air conditioners and heat pumps - Energy labelling and minimum energy performance standard (MEPS) requirements
AS 4254.1	Ductwork for air handling systems in buildings - Flexible duct
NZS 4303	Ventilation for acceptable indoor air quality
AIRAH DA9, ASHRAE or Carrier	Manual calculation methods
ACADS-BSG Camel, Carrier E20	Electronic calculation methods

Warranties

1.3 WARRANTY - INSTALLER/APPLICATOR
Installer's warranty for the system under normal environmental and use conditions against failure.

~ years	Execution warranty

Provide this warranty on the installer's standard form.

1.4 WARRANTY - MANUFACTURER/SUPPLIER
Manufacturer's warranty for the system under normal environmental and use conditions against failure.

~ years:	Warranty

Provide this warranty on the manufacturer's standard form.

KDC - Approved Building Consent Document - BC170701 - Pg 37 of 91 - 11/01/2018 - kjn

Requirements

1.5 CO-ORDINATE WORK
Co-ordinate all items with the main contractor, in particular cutting of penetrations and waterproofing. Exterior penetrations to NZBC E2/AS1 as consistent with the project requirements.

1.6 QUALIFICATIONS
Work to be carried out by approved trades people, qualified, experienced, competent and familiar with the equipment, systems, materials and techniques specified.
Handling or recovering refrigerant to be carried out by the appropriate Approved Filler and/or Handler, with a test certificate under the HNSO Act.

1.7 AIR CONDITIONING LOAD CALCULATIONS
General: Calculate the cooling and heating loads using one of the following:
- Manual methods: AIRAH DA9, ASHRAE or Carrier.
- Electronic methods: ACADS-BSG Camel, or Carrier E20

1.8 AIR CONDITIONING DESIGN BASIS
General
Outside design conditions: Use outdoor design conditions listed in publications from NIWA, ASHRAE, IRHACE or other reliable sources for weather data, for the location geographically closest and most relevant to the site.

Inside design conditions
Summer: 22°C dry bulb, 50% relative humidity.
Winter: 21°C dry bulb.
Limit the temperature difference in air conditioned spaces served by the same zone or system to ± 1.5°C when measured:
- Between any 2 points in the space from floor level to 1500mm above floor level, > 2000mm from cooking equipment and > 1000mm from any other appliance.
- When outside conditions are in the range specified above.
- After the plant has been operating for one hour.
- In the same 5 minute period.

Divide the systems into temperature controlled zones to meet the specified permissible temperature variation and documented system divisions.
Where ventilation requirements are not met by natural means and do not comply with NZBC G4/AS1, supply fresh air to spaces with air conditioning systems via the air handling system, or separate mechanical ventilation system in accordance with NZS 4303.

Heating
Reverse cycle.

Noise
Indoor noise emitted - to AS/NZS 2107, depending on space served, occupancy and activity.
Noise received in all habitable rooms shall not exceed that permitted by the applicable Territorial Authority for the time of day or day of the week for the zoning of the site. Not more than L10: 35dbA between 2300 and 0700 hours. This shall apply to both the property in question and the neighbouring properties.

1.9 INFORMATION FOR OPERATION AND MAINTENANCE
Provide the following general operation and maintenance information as electronic PDF format documents:
All units, filters, controls, pumps, traps, drain trays, refrigerant

1.10 MAINTENANCE CONTRACT PROPOSAL
Provide a proposed contract for the ongoing servicing of the heat pump system.

KDC - Approved Building Consent Document - BC170701 - Pg 38 of 91 - 11/01/2018 - kjn

2. PRODUCTS

Material

2.1 REVERSE CYCLE UNITS
Split system heat pumps shall meet the requirements of AS/NZS 3823.1.1 and AS/NZS 3823.1.2 with minimum energy performance standards (MEPS) in accordance with AS/NZS 3823.2.
Provide effective outdoor coil defrost facility that prevents room temperature dropping more than 2°C during defrost.

2.2 CABINETS
Aluminium, powder coated steel or moulded acrylonitrile-butadiene-styrene (ABS) plastic with zinc - coated steel or stainless steel fasteners. Insulate and vapour seal cabinet and drain trays to prevent external condensation under all operating conditions.

2.3 DRAIN TRAYS
Aluminium, stainless steel or plastic to collect all moisture inside indoor and outdoor units.

2.4 FILTERS
Washable panel type.(85% of arrestance when tested to AS 1324.2, Test Dust No.4 or Class EU2 rated.

2.5 COILS
Copper tube with aluminium plate fins.

2.6 CONTROLS
Provide as a minimum the following functions:
- Temperature control for each zone located to accurately sense zone temperature.
- Fan speed selection for multi and variable speed fans.
- Day/night zone changeover if scheduled.
- Time switch for each system with (6 temperature programs per day, separate programs for each day of the week, manual set point over ride and 'Vacation' or 'Holiday' temperature set back.

2.7 REFRIGERATION PIPEWORK KIT
Split system manufacturer's standard pre-charged piping kit.

2.8 REFRIGERATION PIPEWORK CUSTOM
Copper tubing, de-oxidised seamless refrigeration quality, either half hard or soft drawn. Jointing shall be brazed or flared connections to equipment.

2.9 REFRIGERANT
Refrigerant HFC type with no phase out date, such as R410a or R407a, unless approved otherwise.

3. EXECUTION

Conditions

3.1 DELIVERY
Keep materials and equipment dry in transit. Take delivery of materials and equipment in an undamaged condition. Reject all damaged materials.

3.2 STORAGE
Store materials and accessories on a level, firm base, in dry conditions, out of direct sunlight and completely protected from weather and damage. Ensure storage areas are away from current work areas. Cover to keep dry until installed.

3.3 CONFIRM LAYOUT
Before commencing work confirm the proposed location of pipes, ducts and controls.

KDC - Approved Building Consent Document - BC170701 - Pg 39 of 91 - 11/01/2018 - kjn

3.4 CONCEALED PIPING
All refrigeration and condensate piping shall be concealed within the building structure unless stated otherwise.

3.5 CO-ORDINATE SERVICES
Co-ordinate and co-operate with other sub-trades to avoid any conflict with the installation of the system with other subcontractors work.

3.6 PROTECT SURFACES
Protect surfaces, equipment and finishes already in place from the possibility of damage during the installation process.

Application

3.7 INSTALLATION PIPE WORK
Install general pipe work to AS/NZS 1571

Purge the system at all times with dry nitrogen when brazing or heating pipework.

Pipes to be installed to manufacturer's requirements, adequately supported, also arranged and sized to prevent excessive pressure drop and ensure correct circulation of refrigerant and oil.

All refrigeration pipework test to 1800 kPa.

Insulate all refrigerant and drain piping that may sweat with chemically blown closed cell elastomeric insulation. Suction lines are to be insulated over the entire length between connections to indoor and outdoor units. Protect insulation from sunlight and mechanical damage.
Insulation thickness: 13mm for pipes < DN 20, 19mm otherwise.

Provide trapped (DN 20 condensate drains to AS/NZS 3666.1 from each indoor coil and safety tray, to an approved drain point. Provide drains from each reverse cycle outdoor coil unless casing freely drains to a roof or other location where condensate will not cause damage or pond.

3.8 INSTALLATION UNIT
Provide clearance around outdoor units for condenser air flow and maintenance access, to manufacturer's requirements. Ensure discharge air does not short-circuit to condenser intake.
For equipment at ground level, ensure they are mounted on 100mm level concrete plinth or equivalent impervious material.
Provide internal or external flexible duct connections at indoor unit.

For vibration isolation of suspended units, provide (4 metal spring or rubber-in - shear isolation mountings with (25mm static deflection and 98% isolation efficiency. For floor mounted units, provide neoprene waffle pads. Bolt in place.

If leaks or condensation from equipment could cause nuisance or damage to the building or its contents provide a galvanized steel safety tray under the equipment.

3.9 INSTALLATION REFRIGERANT
The completed system including all pipework, to be evacuated to 0.2mm Hg or better with a vacuum pump and maintained at this pressure for 2 hours, then broken with refrigerant.

KDC - Approved Building Consent Document - BC170701 - Pg 40 of 91 - 11/01/2018 - kjn

Completion

3.10 COMMISSIONING
Commission the systems to manufacturer's recommendations using instruments calibrated in the last 12 months. Submit signed commissioning check list on completion.

3.11 CLEANING
Clean filters, outdoor coils, grilles and diffusers.
Remove debris, unused materials and elements from the site. Clean soiled or marked work. Replace damaged, cracked or marked elements. Leave the whole of this work to the standard required by following procedures.

3.12 PROTECT
Protect new work from damage.

KDC - Approved Building Consent Document - BC170701 - Pg 41 of 91 - 11/01/2018 - kjn

7701 ELECTRICAL BASIC

1. GENERAL

This section relates to the wiring for domestic and small scale commercial installations, including:
- power
- lighting
- complete with componentry
- electrically-powered fittings

1.1 ABBREVIATIONS AND DEFINITIONS
The following abbreviations apply specifically to this section:

RCD	residual current device

Documents

1.2 DOCUMENTS
The following documents are specifically referred to in this section:

NZBC G4/AS1	Ventilation
NZBC G9/AS1	Electricity
AS/NZS 1125	Conductors in insulated electric cables and flexible cord
AS/NZS 3000	Electrical installations (known as the Australian/New Zealand Wiring Rules)
AS/NZS 3008.1.2	Electrical installations - Selection of cables - Cables for alternating voltages up to and including 0.6/1 kV - Typical New Zealand installation conditions
AS/NZS 3100	Approval and test specification-general requirements for electrical equipment
AS/NZS 3112	Approval and test specification - Plugs and socket-outlets
AS/NZS 3190	Approval and test specification - Residual current devices (current-operated earth-leakage devices)
AS/NZS 3350.1	Safety of household and similar electrical appliances - General requirements

Electricity (Safety) Regulations 2010

Warranties

1.3 WARRANTY
Warrant the complete electrical installation under normal environmental and use conditions against failure of materials and execution.

1 year:	Warranty period

Refer to the general section for the required form of 1237WA WARRANTY AGREEMENT and details of when completed warranty must be submitted.

Requirements

1.4 COMPLY
Comply with the Electricity (Safety) Regulations 2010, AS/NZS 3000, AS/NZS 3008.1.2 and TCF Premises Wiring Code of Practice for listed and prescribed work and with the utility network operator's requirements. Apply for the service connection. Arrange for the required inspections of listed work. Pay all fees.

1.5 QUALIFICATIONS
Carry out work under the supervision of an electrical licensed supervisor.

KDC - Approved Building Consent Document - BC170701 - Pg 42 of 91 - 11/01/2018 - kjn

1.6 SAFETY OF INSTALLATION - DESIGN BY ELECTRICIAN
Before installation work commences provide a declaration of conformity. The declaration of conformity is to comply with the Electrical (Safety) Regulations (2010), regulations 57 and 58. It must be signed by the designer of the installation.

1.7 ELECTRICAL CERTIFICATE OF COMPLIANCE
Supply a certificate of compliance (CoC) to the owner, and if required the NUO, as required by the Electricity (Safety) Regulations (2010), prior to connection.
- Arrange for the NUO to inspect before the meter installation, listed work inspection, polarity check and supply becoming live.
- Arrange for an inspector to inspect as required by regulation 70.

2. PRODUCTS

2.2 CABLES
Tough plastic sheathed copper conductors to AS/NZS 5000.2, stranded above 1.0mm², and to AS/NZS 3008.1.2. Minimum sizes as below. Increase sizes if the method of installation, thermal insulation, cable length or load will reduce the cable rating below that of the MCB rating, or produce an excessive voltage drop.
Lighting circuits: Domestic: 1.5mm² on 10 amp MCBs
Power circuits: 2.5mm² on 16 amp MCBs for domestic insulated construction, or filled cavity

2.4 DISTRIBUTION BOARD
Flush surface mount boards manufactured to AS/NZS 3439.3 and installed in accordance with AS/NZS 3000. Manufactured from engineering grade resin with a glow wire rating of 850°C, complete with neutral and earth busbars, and insulated comb phase bar. Distribution boards to have 20% spare capacity for future additions and alterations.

2.5 CIRCUIT PROTECTION
General requirements including main switch 63A or 100A. Residual current protection 30mA, ensure RCCBs' meet Type A and comply with AS/NZS 3190. MCBs to 4.5kA or 6kA rated.

2.6 WALL BOXES
Standard grid size or equivalent to be manufactured from plastic or metal, with 2 or more gang size to be metal with steel inserts for accessory securing screws. Screw fixed.

2.7 SWITCH UNITS
Single pole switches to be 16 amp minimum rated, double pole or intermediate to be 16 amp minimum rated. All switches to be 230 volt a.c. polycarbonate flushplate units. Refer to drawings/schedules for number of switches per unit, dimmer units, neon (indicator or toggle) units and 2 way units.

2.9 SWITCHED SOCKET UNITS
10 amp, 230 volt flat 3 pin socket outlets fitted with safety shutters and manufactured to AS/NZS 3100, AS/NZS 3112 and AS/NZS 3113, single or multi gang as detailed.

2.10 CEILING ROSES
White plastic mounting base with screwed cover, manufactured to AS/NZS 3113. Terminal type. Cylindrical section TPS for suspended fittings.

2.11 BATTEN HOLDERS
Standard white plastic bayonet cap, with cap angled where wall mounted. Brass liners.

2.12 LIGHT FITTINGS
Fluorescent and High Intensity Discharge fittings with low loss control gear and power factor corrected to 0.95 minimum. Control gear suitable for dimming if this is required. All fittings complete with lamps; Incandescent GLS lamps pearl, coiled-coil 230v rated, bayonet cap; Fluorescent triphosphor 2700K; CFL; halogen ELV 12v dichroic reflector with cover glass unless detailed otherwise.

KDC - Approved Building Consent Document - BC170701 - Pg 43 of 91 - 11/01/2018 - kjn

2.14 SPACE HEATERS
Fixed wired room heaters radiant or convector, and compliant with AS/NZS 3350.1. Flush or surface mount, fitted with safety cut-outs.

2.15 EXHAUST FANS
Ceiling, wall or duct mounted exhaust fans for ventilation to NZBC G4/AS1, and compliant with AS/NZS 3350.1.

2.16 HEATED TOWEL RAILS
Fixed wired heated towel warmers, double insulated, IPX4 splash-proof, compliant with AS/NZS 3350.1, scratch resistant powdercoated or chrome finish.

3. EXECUTION

3.3 CIRCUIT PROTECTION
Install MCBs at distribution board to AS/NZS3000 to protect each final sub circuit.

3.4 EARTH BONDS
Bond together and to earth all plumbing fittings not adequately isolated, to AS/NZS 3000, the Electricity (Safety) Regulations 2010 and the fitting manufacturer's requirements.

3.6 EARTH LEAKAGE PROTECTION
Install RCD protection to AS/NZS 3000.

3.7 DOMESTIC INSTALLATIONS
Install 30mA RCD protection at the distribution board for all final sub circuits to control socket outlets and lighting except for fixed or stationary cooking equipment, to AS/NZS 3000.

3.8 HIGH RISK AREA INSTALLATIONS
Install 30mA RCDs at the distribution board for areas not covered in Domestic installations, or using fixed wired RCD protected socket outlets in areas that may represent increased risk of electric shock to the user:
- Wet areas: bathrooms, laundries, kitchens.
- Near pools and water features.
- Where intended for use with cleaning equipment.
- Hand-held tools subject to movement in use, i.e. work-shops, garages.

3.9 SET-OUT
The position of outlets and equipment shown on drawings is indicative of requirements. Confirm documents and site conditions are not in conflict with other services or features. Resolve conflicts and discrepancies before proceeding with work affected. Confirm on site the exact location, disposition and mounting heights of all outlets, fittings, equipment, penetrations, and use of exposed wiring. Fix outlet items level, plumb and in line.

3.10 CABLING
Install wiring systems to AS/NZS 3000. All cabling run concealed. No TPS cable laid directly in concrete. Locate holes in timber framing for the passage of cables at the centre line of the timber member. Install cable in conduits where required to pass through concrete or underground. In walls run cabling horizontally and vertically in straight lines. In ceilings either run cabling along ceiling framing or attached to catenary wires. Clip cabling to ceiling framing/catenary wires.

3.11 CABLING CIRCUITS
Install all circuits with the appropriately rated cable and circuit protection. Install with a maximum of 8 light switch units or 4 double or single switched socket units on any circuit. Minimum 2 lighting circuits per floor. Separate circuits for all electric heating appliances. Kitchen sockets to be on at least two different circuits.

KDC - Approved Building Consent Document - BC170701 - Pg 44 of 91 - 11/01/2018 - kjn

3.12 WALL BOXES

Mount flush in cavity construction size to fit products selected. Fix vertically mounted wall boxes to studs. Screw fix horizontally mounted switched socket outlet wall boxes to solid blocking or nogs. Fix switch panel wall boxes to solid blocking.

3.13 SWITCH AND SOCKET UNITS

Fit all single and double switch units, all sockets to the following heights (to the centre of the unit) unless shown otherwise on the drawings.

Switch Units: 1000mm above finished floor
Socket Units: 150mm above work benches
400mm above finished floor

Mount light switches and switch socket outlets vertically and socket units horizontally. Label all switch units that control electrical equipment or special lighting circuits by colour filled engraving on the switch. Use proprietary engraved switch mechanisms where applicable.

3.18 SPACE HEATERS

Install to the heater manufacturer's requirements, and to AS/NZS 3000. Fit neatly and without damage to surrounding finishes. Ensure control switches and thermostats are fitted to appliance, or otherwise connect to a control switch located adjacent to the heater and a remote thermostat.

3.19 BATHROOM ELECTRICAL FIXTURES

Install all electrical fixtures. Connect the following bathroom and toilet electrical items:

- Heated towel rails: Install to manufacturers requirements and installed in accordance with AS/NZS 3000 and the NZBC G9/AS1
- Mirror demisters: Locate centrally above the wash hand basin(s). Connect wiring to room lighting unless specified otherwise.
- Exhaust fans: Install exhaust fans to manufacturer requirements. Installed in accordance with AS/NZS 3000 and NZBC G4/AS1.

3.21 LABELLING

Include label under each controller, switch and circuit breaker on distribution boards. Include a warning notice if light dimmers are used in the installation. List the rating of each circuit.

Completion

3.22 COMPLETION

Leave installation operating correctly, with equipment clean and operational.

Wetroom Concept

Tarkett COMMERCIAL

INSTALLATION INSTRUCTIONS

VINYL

KDC - Approved Building Consent Document - BC170701 - Pg 45 of 91 - 11/01/2018 - kjn

Wetroom Concept - Installation instructions

This information is subject to change (11/2008).

KDC - Approved Building Consent Document - BC170701 - Pg 46 of 91 - 11/01/2018 - kjn

Wetroom Concept is a system for wet areas comprising floor and wall coverings, drains and accessories.

All Tarkett resilient flooring products are composed of the highest quality raw materials available and are manufactured under strict production control. They will meet the most exacting requirements of architects, contractors, owners and users. Top quality material is only half of the story: a floorcovering's beauty and serviceability is dependant also on proper installation over a suitable subfloor. By carefully using these instructions, it should be simple matter to make each installation a job of which all can be proud.

BEFORE INSTALLATION

• Handling, storage and acclimatisation

- Care should be taken when handling all types of floor and wall coverings to ensure that safety procedures are followed and damage does not occur to the material.
- Check the material for visible defects and/or damage before and during installation.
- Use the same batch number for each continuous surface. Save the details for each roll until the installation is completed.
- The rolls shall be stored in an upright position.
- It is important that the rolls are stored for 24-48 hours before installation at a minimum temperature of 15°C (ideally around 18°C). The pieces of flooring shall be cut to the required lengths, leaving a few centimetres more and stored in the room where they are to be installed. This temperature should be maintained throughout the installation.
- The minimum temperature of the subfloor should be 15°C.
- The relative humidity inside the room should be 50-60%.

• Underfloor heating

It is imperative that underfloor heating systems have been previously commissioned and found to be functioning correctly prior to the installation of the floorcovering. Ensure that the underfloor heating system is switched off 48 hours prior to the floorcovering installation commencing and remains off for at least 48 hours after the installation is complete. During the period of decommissioning of the underfloor heating system, an alternative heating source should be provided, if required, to ensure that the area of installation is kept at a constant temperature of 15°C - 27°C. Gradually increase the temperature over a number of days by only a few degrees per day until the desired room temperature is reached. The temperature should never exceed the floorcovering industry agreed maximum of 27°C at the underside of the floorcovering (the adhesive line).

KDC - Approved Building Consent Document - BC170701 - Pg 47 of 91 - 11/01/2018 - kjn

• Preparation of the subfloor

The subfloor must be smooth, level, clean, dry, structurally sound, moderately absorbent and not exposed to high humidity. The preparation/dryness of the subfloor and installation procedures should all be as per the current relevant building standards in New Zealand. The dryness of a concrete subfloor should be below 75% RH when tested with a Surface Mounted Hygrometer.

IMPORTANT: to allow perfect water drainage, the subfloor should be a slope of at least 1 cm per metre towards the drain.

- Use a water-resistant levelling compound when patching or filling in areas where wet conditions exist.
- Subfloors made of particle board shall be installed according to the respective manufacturer's directions.
- If the subfloor is painted, damp-proofed or non-absorbent, then you must allow the adhesive to become "tacky" before installing the floor.
- Seams are not recommended within a 0.5 m radius of floor drains. Contact Jacobsen Creative Surfaced Ltd if unsure about any part of the installation.
- For specific subfloor types and preparation, please contact Jacobsen Creative Surfaces Ltd.

Note: although Tarkett may on occasion list a choice of adhesive and levelling compound manufacturers and types, we do not however guarantee the products listed. The list of products and manufacturers are not guaranteed complete or current. Tarkett would not accept any liability for any of these products failing to perform in conjunction with any of their products. It is the responsibility of the adhesive and levelling compound manufacturer and flooring contractor to ensure the products being used are appropriate for use and applied in accordance with the manufacturers' recommendations.

• Adhesives

Tarkett recommends the use of water-dispersed Acrylic adhesive for the Wetroom Concept. Contact Jacobsen Creative Surfaces Ltd for specific brand recommendations.

Please Note: Use of other adhesive types may void any material warranties. It is the responsibility of the adhesive supplier and flooring contractor to ensure adhesives being used are appropriate for use and applied in accordance with the manufacturer's recommendations.

• Protection of installation

If building work is carried out after installation, the floor should be covered for protection. Masking tape must not be stuck directly to the floor. If it is necessary to put the floorcovering to use at an early stage, protect the installation with hardboard or plywood.

• Technical assistance

Companies that have not had experience of using Wetroom Concept should contact Jacobsen Creative Surfaces Ltd for advice.

• Project Management

The reputation of Tarkett Wetroom Concept is based on more than 20 years of quality installation. We advise project managers to ascertain the experience of the company bidding to install Wetroom Concept.

KDC - Approved Building Consent Document - BC170701 - Pg 48 of 91 - 11/01/2018 - kjn

Quick overview

Start with the installation of a drain and minimum of 30 cm from the walls (measuring from the edge of the drain).

The flooring is coved to approximately 15 cm up the wall. The Wall and Floor vinyl should be joined using the JCS Floor/Wall Finishing Strip (refer diagram below). When using Tarkett Eminent Safe T and/or Universal SafeTred the overlap method is acceptable. For best results the top section of the coved vinyl should be tapered off gradually to the wall using a water-resistant levelling compound or a 2mm Reducer Strip. Wallcovering should overlap coved vinyl by at least 3cm.
When using a 2mm Wall Vinyl the coved Vinyl and Wall Vinyl should be thermo rod welded.

To achieve a perfect watertight installation, all the floor and wall sheets must be hot welded using Tarkett welding rods. For the best result, use a speed welding nozzle. For removal of excess welding rod use a special trimming knife or an equivalent tool.

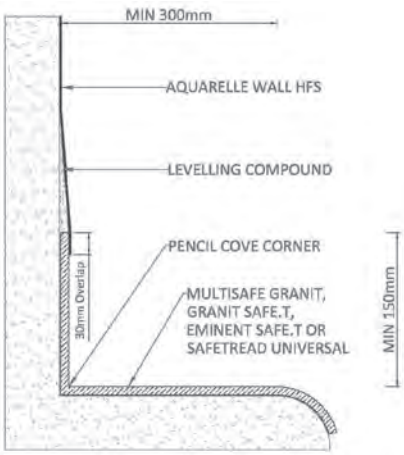

With junction coving and cove former

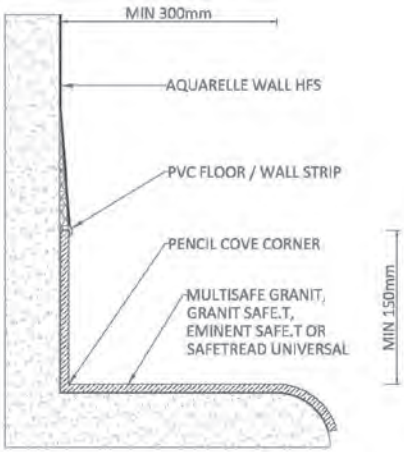

With levelling compound and without cove former

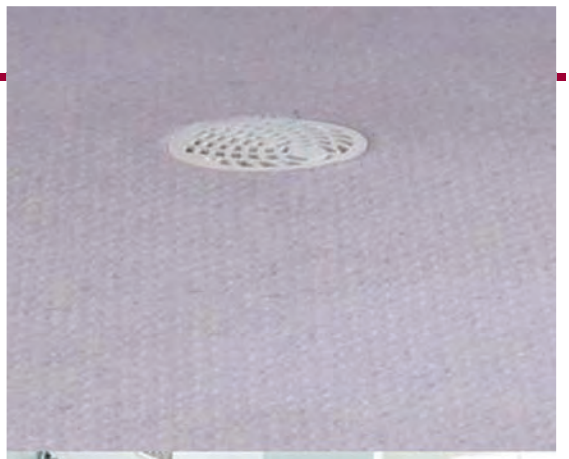

KDC - Approved Building Consent Document - BC170701 - Pg 49 of 91 - 11/01/2018 - kjn

Installing the drain

IMPORTANT: to allow perfect water drainage, the subfloor should be foreseen with a slope of at least 1cm per metre towards the drain.

The drain must be located a minimum of 30cm from the walls and should be installed by a plumber.

• Floor waste

Ensure floor waste used is suitable for vinyl. The vinyl MUST be able to be feed into the waste and clamped. The following are suitable and recommended:

- Allproof Industries Vinyl Clamp Ring Gate (flow through)
- Metrix 5700 Valentin Series (in-built trap)

Vinyl Clamp Ring Grate

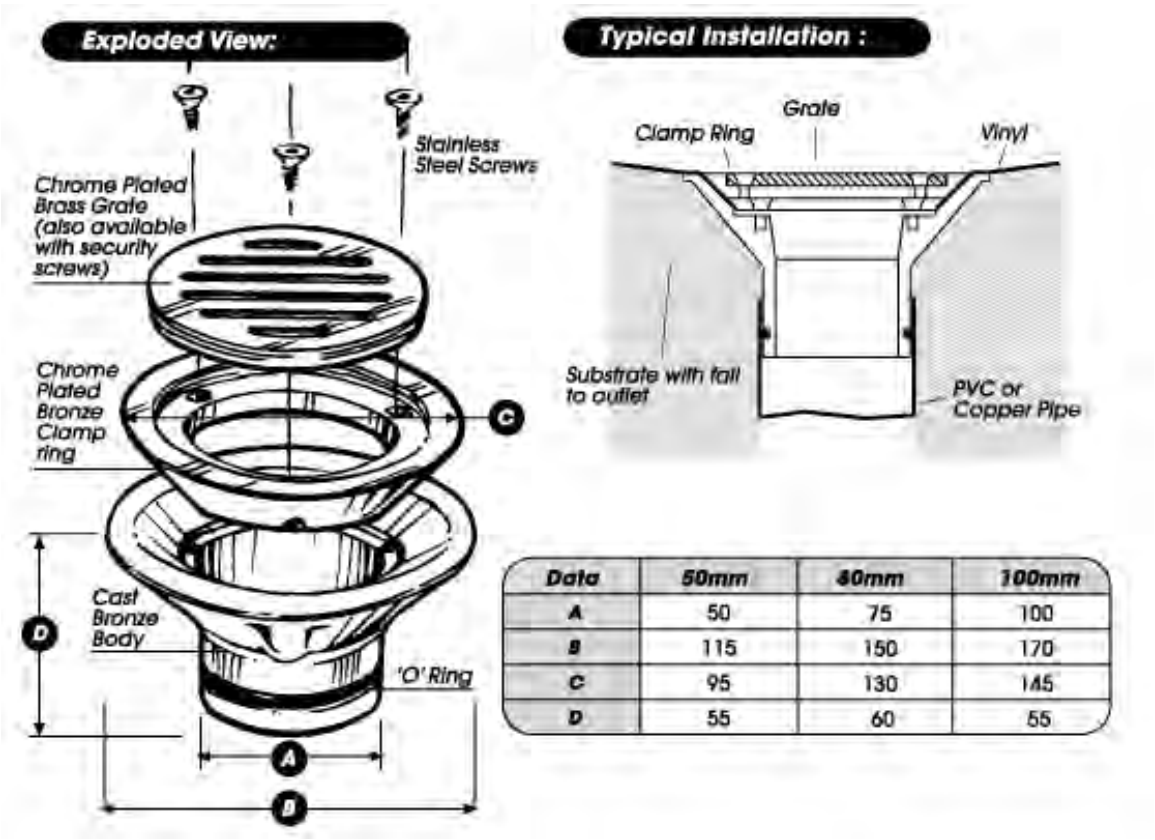

Data	50mm	40mm	100mm
A	50	75	100
B	115	150	170
C	95	130	145
D	55	60	55

Installing the floorcovering

MULTISAFE GRANIT, EMINENT SAFE T or SAFETRED UNIVERSAL

KDC - Approved Building Consent Document - BC170701 - Pg 50 of 91 - 11/01/2018 - kjn

• Cutting the Sheets

When cutting the sheets, make sure there is enough material for the coving (the sheets should be cut longer than the room length). During the laying, the temperature of the subfloor and the room should not be lower than 15°C. Pre-cut 24 hours before gluing and lay the flooring flat to allow the material to relax and adapt to room temperature. This is especially important for long lengths.

When a sheet fits the width of the room, make a cross mark on the bottom of the material and the subfloor to indicate the centre. This will help you place the sheet in its exact position. The cross marks should coincide when placing the material.

When the width of the room exceeds the sheet width (more than one piece has to be installed to cover the area), mark a line on the floor parallel to the longitudinal wall at a distance equivalent to 12 cm (about 4.5 in.) less than the sheet width. Mark the room's centre on this line. On the bottom of each sheet, mark their centre. The cross marks on the subfloor and sheets shall coincide.
Sheets shall always be reversed to prevent shading effects. Caution: all welded joints must be at least 30 cm from the drain.

• Tracing the coving

Using a straight edge and pencil, mark up to a height of about 15 cm all walls where the flooring will be coved. When marking, only use a lead pencil.

Apply the adhesive on the walls up to the marked line, using a fine notched trowel. Spread some of the adhesive out on to the floor.

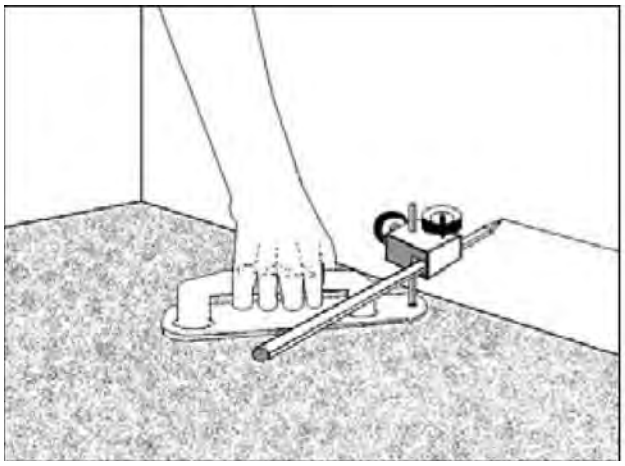

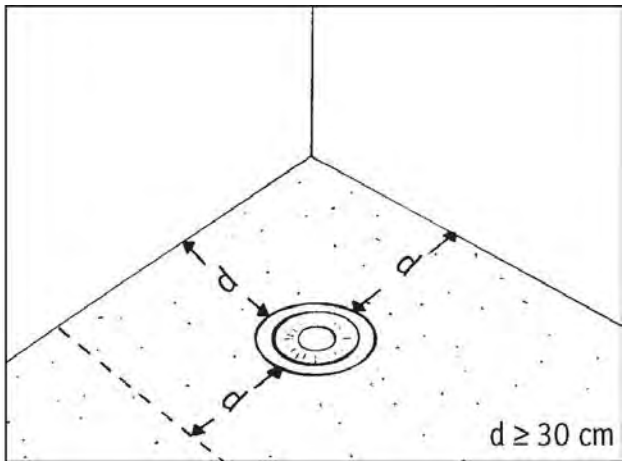

Installing the floorcovering

• Drain pipes and floor drains

IMPORTANT: no glue around and inside the drains!

Above drain pipes, fold the sheet against the pipe and mark the center of the pipe on the back of the floor.

Cut a hole about 25 mm smaller than the diameter of the pipe. Cut the hole at the start of the fold. Warm the sheet with a hot air gun and press it over the pipe.

• Laying and coving

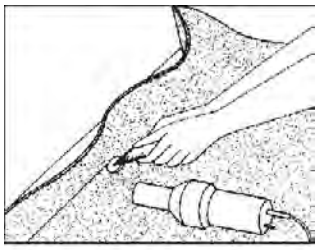

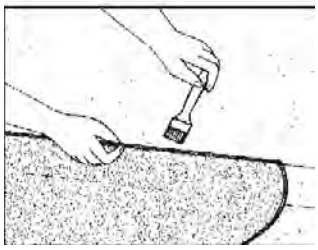

In areas where one sheet is sufficient to cover the floor, the adhesive can be applied over the entire
surface area before installing the sheet.
In areas where several sheets are necessary, fold back and loosen the sheets covering half of the floor area. Apply the adhesive on the subfloor with a fine-notched trowel (300 to 350 g/m2). Use a soft brush in hard-to-reach areas. Follow the respective manufacturer's instructions for the adhesive you have selected.

Use a corner roller to obtain smooth corners when coving. With the corner roller, press the material firmly into the juncture between the floor and wall.

After waiting for the adhesive to become tacky, lay the first section of the sheet (or sheets). Position carefully. Raise the second section of the sheet or sheets and continue laying using the acrylic adhesive.

The coving must be fixed with double-gluing using a suitable adhesive (adhesive applied using a brush on the substrate and the reverse), in accordance with the time required for the adhesive to become tacky.

KDC - Approved Building Consent Document - BC170701 - Pg 51 of 91 - 11/01/2018 - kjn

Installing the floorcovering

• Corners

Inside corner

When fitting in-corners, make a cut in the excess material starting about 5 mm above the floor in the corner. The material has to be heated before folding, heat the area between the sheet and the wall. This provides better contact between the sheet and adhesive.

Press the material firmly into the corner with a corner roller.

The corner seam shall be placed on one of the walls at a 45° angle

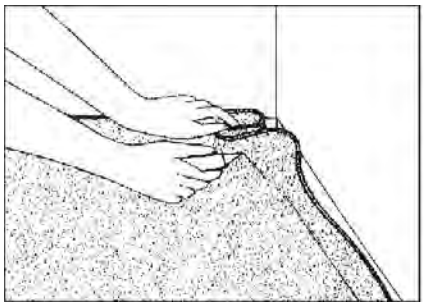

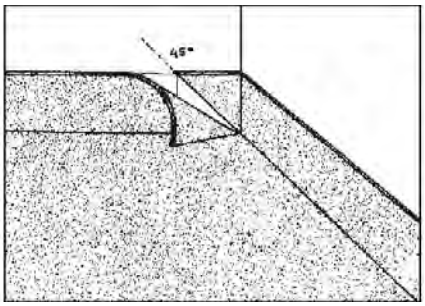

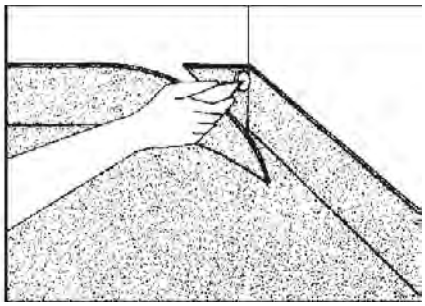

Outside corner

When fitting an out-corner. The sheet is folded against the corner and cut about 5 mm from the floor. The guidelines in the picture show the corner on the sheet and the position of the cut at about a 45° angle. Then a diagonal cut is made as shown.
To adhere the triangle-shaped piece more simply and securely, cut a groove on the back of the triangle with a corner knife. The depth of the groove shall be no deeper than half of the sheet thickness.

The triangle can now be folded and placed on the corner. It will overlap the coved floor. Cut through the overlapping material to make a tight fit.

Glue the substrate and the reverse of the flooring with a suitable adhesive.

When the adhesive becomes tacky, press the upturn against the wall.

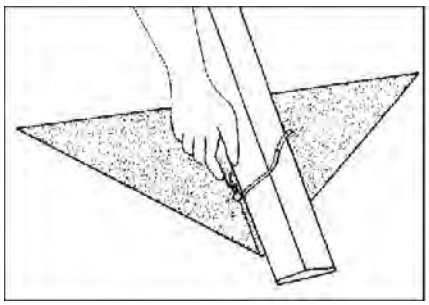

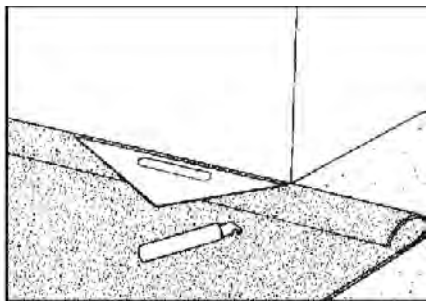

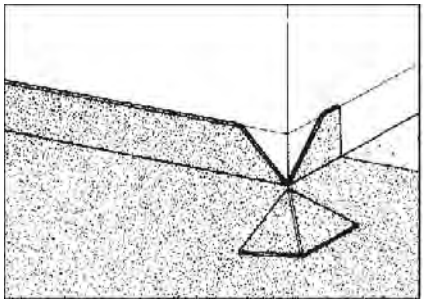

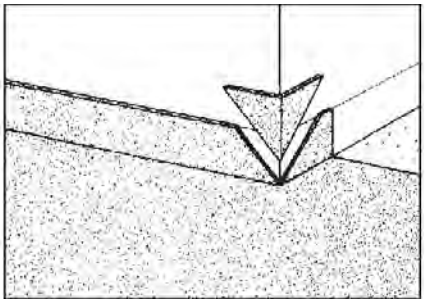

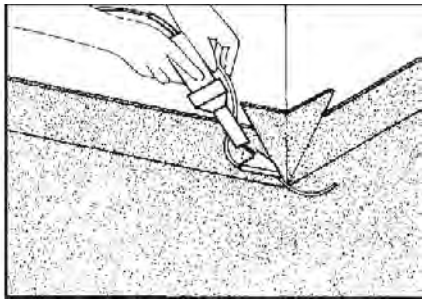

KDC - Approved Building Consent Document - BC170701 - Pg 52 of 91 - 11/01/2018 - kjn

KDC - Approved Building Consent Document - BC170701 - Pg 53 of 91 - 11/01/2018 - kjn

Installing the floorcovering

• Hot Welding

Important: always wait 24 or 48 hours after laying before welding the floor joint using the welding rod. Do not start welding until the adhesive is completely dry.

All welding seams are grooved with a Grooving machine or a Seam grooving tool with a hardmetal blade. Weld with a Hot air gun and Tarkett Speed welding nozzle or any suitable Speed welding nozzle specially designed for welding vinyl floors. Then trim the welding rod with the special Trimming knife. If the raised parts of the embossed pattern are too close to the seam, cut them off at the same time as you trim the welding thread (Seam plane).

CAUTION: welded seams must cool to room temperature before trimming. Start trimming where you began welding. All trimming of welding rod is recommended in two steps: rough and fine trimming. With a Trimming knife rough and fine trimming can be done by turning the knife. When fine trimming welding rod, turn the grooved side up.

• Pipe Works

As far as possible it is best to avoid pipework penetrating the floor by making the necessary arrangements at design stage (grouping vertical outlets into a services conduit or siting them within studwork partitions).

Around pipes by walls, cut the sheet and press it against the pipe to form a collar. In tight or cramped areas between pipes and walls, cut as shown by the dotted line. If a cover is required, do the following: if you make a cover out of floor material, fit it against the pipe with adhesive. Weld the seams together using a repair gun.

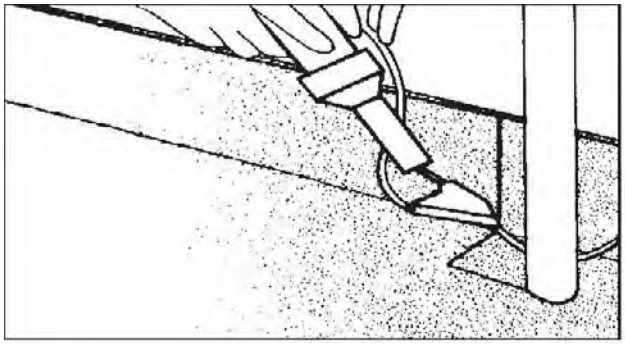

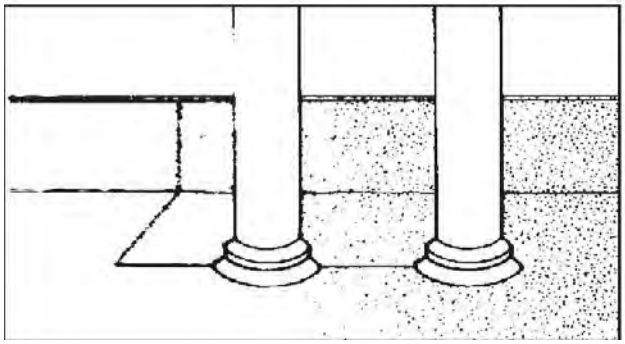

KDC - Approved Building Consent Document - BC170701 - Pg 54 of 91 - 11/01/2018 - kjn

Installing the wall covering

PREPARATION OF THE WALLS

If necessary remove previous coverings. On a block or porous substrate, apply a suitable primer. Do not use paint, even diluted.

• Installing the material

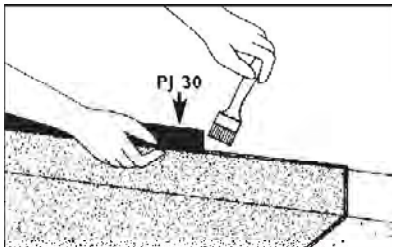

When installing Aquarelle Wallgard or Wallgard 1.3mm in conjunction with Granit Multisafe the JCS PVC Floor/Wall Joiner Strip should be used.

Cut 24 hours before gluing. Minimum ambient temperature: + 15° C.

For a perfect overlapping (levelling compound or Reducer Strip)

Before installing the wallcovering on the floorcovering, the upper edge of the coved floor material should be filled in using a water-resistant levelling compound that you will sand to achieve a smooth juncture.

To compensate for the thickness of the coving, a 2mm Reducer Strip can also be used. Apply the profile by double-gluing using a suitable adhesive.

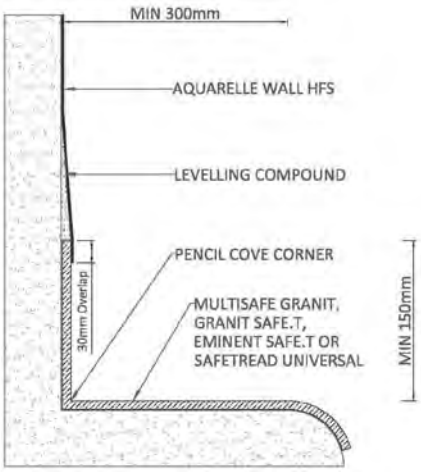

With junction coving and cove former

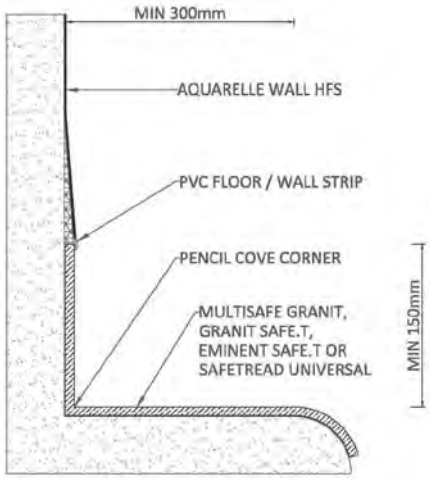

With levelling compound and without cove former

• Caution

The sheets must never be cut in the corners and joints must be located as far away from the wet area as possible and at least 10 cm from a corner. Allow for an overlap of at least 3 cm over the floor coving.

• Vertical installation

The sheets can be installed vertically and hung over the whole height of the room (sheets reversed).

KDC - Approved Building Consent Document - BC170701 - Pg 55 of 91 - 11/01/2018 - kjn

Installing the wallcovering

Horizontal Installation

Aquarelle Wall HFS can also be installed horizontally.

When Wallcladding is not installed to ceiing height, ensure that a capping system is used such as a timber moulding fitted to overlay edge of vinyl, a PVC Capping Strip or Silicone Bead.

• Gluing

Coat the wall over the width of a sheet down to the coved flooring with Uzin KE 2000S acrylic adhesive recommended by Tarkett, using a fine-notched trowel (220 to 250 g/m2) starting from the plumb line previously drawn onto the wall.

Wait for the adhesive to become tacky, then place the first sheet in line with the plumb line. Position very carefully. For the second sheet, coat the substrate with adhesive and hang sheet reversed, either by butting it up tight, edge to edge (Important: first check the condition of the edges), or by overlapping the edges by about 3 cm.

In the overlapping case, to cut the joint, heat with the heat gun and cut with a straight blade or using the Combined scriber (see page 14).

For multipled sheets, continue with this process.

Jacobsen recommend the use of Uzin KE 2000S acrylic adhesive for wall covering installation. **Do not use** solvent based neoprene contact adhesives as these can cause plasticiser migration.

• Corners

Inside corner

To create the corner, use the corner roller, while heating the covering with the heat gun. Where the corner of the substrate is not straight, cut the covering vertically, at least 10 cm from the corner and continue hanging.

Outside corner

Hang by double-gluing using a suitable adhesive 5 cm each side of the corner. In case of a non-vertical corner, cut at 10 cm from the corner and continue hanging.

After installation

• Hot welding the joints

The joint is opened using a Grooving tool (Gouge for wall) supported by a Thick ruler.

Weld from top to bottom using the Speed nozzle.

Trim in two stages using the Trimming knife, pre-trimming using a Trimming guide and finishing with the Trimming knife without the guide.

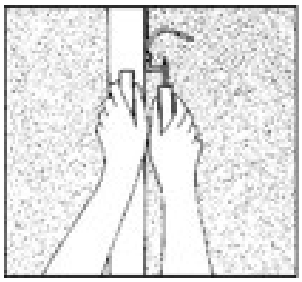
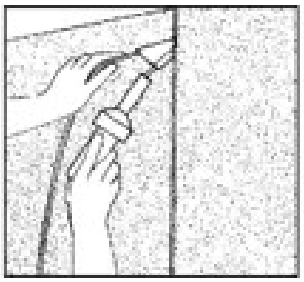
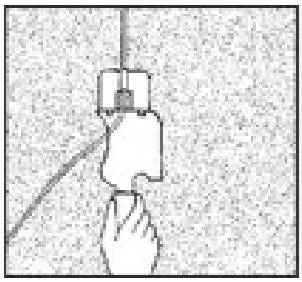
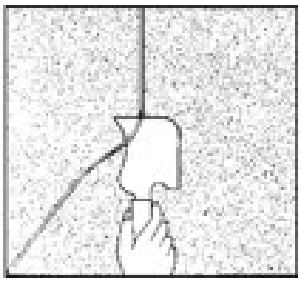

CAULKING

Where floor or wall coverings are perforated, watertight chemical plugs are used or the inside of the plug is filled with a suitable watertight mastic (of the polyurethane or MS polymer type) before fixing accessories and sanitary equipment using screws. In addition, watertight mastic must be applied between the surfaces in contact.

For example: when installing a WC (with a wall-hung bowl for preference), proceed as indicated above and in addition, use watertight mastic under the bowl before installation.

Use a suitable mastic (acrylic, polyurethane or MS polymer type) around door frames, at the base and top of the wall covering and around any fixings installed after the Aquarelle Wall HFS is hung.

KDC - Approved Building Consent Document - BC170701 - Pg 56 of 91 - 11/01/2018 - kjn

PROTECTWALL 1.5 mm

Installation instructions

January 2014

KBC Approved Building Consent Document - BC 7/07/21 - Pg 57 of 91 - 14/12/2018 kjn

IMPORTANT!

- Make sure all specifications and instructions are followed carefully.
- Contact your Jacobsen representative if you are unsure about any part of the installation.
- This information is subject to change due to continuous improvement.
- Use the same batch number for each continuous surface.
- The rolls shall be stored in an upright position.
- Cut the sheets at the desired dimensions prior to installation.
- Let the cut sheets acclimatise at least 24h before installing at room temperature (minimum 15°c).
- The substrate (wall) must be flat, level, clean, without marks (no felt pen, marker, etc.), sound, dry, solid, hard, smooth and not exposed to moisture. Absorbency must be checked and adjusted to have moderately absorbent substrate.
- Use only adhesives recommended by Jacobsen. Always follow the adhesive manufacturer's instructions.
- The work must be completed with an inspection: ensure that the newly laid wallcovering is free from adhesive residues.

SUBSTRATE

The substrate must be level, flat, clean, free from marks (no felt pen, marker of any type, ballpoint pens, paint, etc., that could cause discoloration due to migration) sound, dry, solid, hard, smooth (the absorbency must be checked) and not exposed to moisture.

The preparation/dryness of the substrate and installation procedures should all be in accordance with the AS/NZS 1884.
The dryness of a solid substrate should be below the maximum moisture level permitted when tested in accordance with that Standard.

Note: exclusion of liability (adhesives, mortar, filler, etc.)
Although Jacobsen may list a selection of adhesive, mortar (filler) and surface damp-proof membrane manufacturers and types, we do not guarantee the products listed. The list of products and manufacturers is not guaranteed complete or current.
Jacobsen will accept no liability for any of these products failing to perform in conjunction with any of its products. It is the responsibility of the adhesive, mortar (filler) and surface damp-proof membrane manufacturer and flooring contractor to ensure the products being used are appropriate for use and applied in accordance with the manufacturers' recommendations.

CONDITIONS REQUIRED FOR INSTALLATION

It is important to store the sheets for at least 24 hours before installation at a minimum room temperature of 15°C. This temperature should be maintained throughout the installation.
The recommended relative humidity inside the room should be 35-65%.
The rolls shall be stored in an upright position

INSTALLATION

Vertical installation
The sheets can be installed vertically and hung over the whole height of the room (sheets reversed or not, according pattern).

Horizontal installation
Protectwall can also be installed horizontally.

GLUING

Glue with an acrylic adhesive emulsion recommended by Jacobsen. Apply about 150 to 250 g/m2 using the recommended trowel.
Always follow the adhesive manufacturer's instructions and respect adhesive drying and working time. Place the sheets tight edge to edge.

The wallcovering should be rolled twice with a manual roller immediately after installation to flatten the adhesive ridges. It is also possible to do this with a piece of board with a rounded edge, a cork press or a pressing hammer.

KIJO - Approved Building Consent Document - BC17/701 - Page 58 of 91 - 11/01/2018 kjn

Inside corner
To create the corner, use the corner roller, while heating the covering with the heat gun. Where the corner of the substrate is not straight, cut the covering vertically, at least 10 cm from the corner and continue hanging.

Outside corner
Unless the external corner has a large radius, it is recommended to install to either side of the corner and then cover the corner with a protective angle strip. The strip must be sealed with a sealant top and bottom.

JUNCTION WITH THE FLOORCOVERING

In case of cove forming (minimum 10 cm high) : hot weld wallcovering and floorcovering together using the Jacobsen 0.5mm bevel strip so that the 2mm floorcoving is flush with the 1.5mm Protectwall.

HOT WELDING

Important! Do not weld until the adhesive has bonded completely (wait 24 to 48 hours).

Groove joints to about 2/3 of the thickness using a hand grooving tool before welding.
Weld with hot air and a Tarkett Speed Welding Nozzle or equivalent
Trim the welding rod in 2 times (just after welding and after cooling).

AFTER INSTALLATION

IMPORTANT! Wait 48 to 72 hours before allowing any work on the installed wallcovering.

Protection of installation
If building work is carried out after installation, the wall should always be protected by covering it with foil or textile. Masking tape must not be stuck directly to the Protectwall.

Initial site clean
An initial site clean is always recommended before the new wallcovering is commissioned.
Residual adhesive should be removed with methylated spirits and a clean cloth.
Lightly soiled walls: sweep or damp mop the area to remove loose dirt and building dust.

MAINTENANCE

Daily maintenance
Wet brushing with diluted neutral detergent (pH 6/8). Always follow the detergent manufacturer's instructions.

Periodic maintenance
Wet brushing (soft bristle brush) with diluted alkaline detergent (pH 8/10). Always follow the detergent manufacturer's instructions. Occasionally, it may also be necessary to use disinfectants, degreasing and/or descaling agents.

CBI 5113

March 2007

GIB Aqualine®
Wet Area Systems

KDC - Approved Building Consent Document - BC170701 - Pg 59 of 91 - 11/01/2018 - kjn

www.gib.co.nz

GIB®

Introduction

MARCH 2007

THIS PUBLICATION

This publication is not intended as the definitive guide on wet area construction and wet area systems, but rather as a helpful guide to best practice around areas where there is intermittent water exposure and splash zones within residential and non-residential buildings – in particular, areas covered by the New Zealand Building Code (NZBC), Clause E3 Internal Moisture.

The information herein is designed to be helpful to designers, contractors and home-owners wishing to achieve a result that is easy to incorporate into modern design, simple and clear to construct, and that will satisfy the needs, requirements and expectations of both the NZBC and the end user.

Wet areas in the home often require relatively frequent and expensive renovation or repair, often because of the ingress of water to the structure of the building.

It is important to introduce materials and systems which have been specially designed to cope with the conditions that are common in wet areas, and to ensure they are installed correctly, using best practice, and are compatible to form a complete wet area system.

The code numbers shown with each "typical detail", e.g. GAW-D030, match the code numbers for drawings available as downloads on the GIB® website at www.gib.co.nz

The reference numbers (e.g. GAW-D030) stand for: GAW D 030

GAW – GIB Aqualine® Wet Area System; D – Detail; 030 – Drawing Number

WHAT IS A WET AREA?

Generally, wet areas are described as spaces to where fresh water is reticulated, such as bathrooms, toilets, laundries and kitchens. Wet areas fall into two categories; these are well explained and documented in the NZBC, Clause E3.

1. Water splash areas – These are areas subject to intermittent splash of liquid water around sanitary fittings and appliances such as baths, vanities, laundry tubs, sinks, etc. These areas are required to have an impervious, easily cleaned surface.
2. Shower enclosures – These are areas subject to more frequent, larger quantities of water, and include shower enclosures and shower over bath areas. The NZBC E3/AS1 requires these areas to be impervious, and specifically excludes any paint and wallpaper finishes. Where ceramic tile or stone finishes are applied, E3/AS1 requires that they "shall be laid on a continuous impervious substrate or membrane".

The requirements of these wet areas are described on page 6 of this publication and in full in Clause E3 of the NZBC. Clause E3 also refers to other requirements not covered in this publication, such as ventilation, condensation control and overflow management, which will require separate consideration. Ongoing maintenance of wet areas is also important to maximise the life of the wet area.

GIB AQUALINE®

Although able to cope with infrequent short-term exposure, standard gypsum plasterboard will have a shortened life expectancy when frequently exposed to water or moisture.

The NZBC does not call for water resistant linings in wet areas but it is highly desirable to incorporate lining materials which will maintain their integrity longer when exposed more frequently to water or steam and particularly to one-off events such as leakages or flooding of a room.

GIB Aqualine® is ideal in such situations because it features a water resistant wax polymer impregnated core.

Unlike other commonly used substrates, the GIB Aqualine® core not only resists penetration of water through the lining into the framing behind, but also resists water "wicking" up the core, a common cause of long-term damage where a water resistant lining has not been used.

GIB Aqualine® will maintain its integrity for extended periods, particularly where wicking over large areas can destroy the integrity of the interface between the lining and paint or wallpaper surfaces or between the lining and the tile adhesive.

The illustrations below graphically show the difference between GIB Aqualine® and standard plasterboard after a two-hour soak test in red dye.

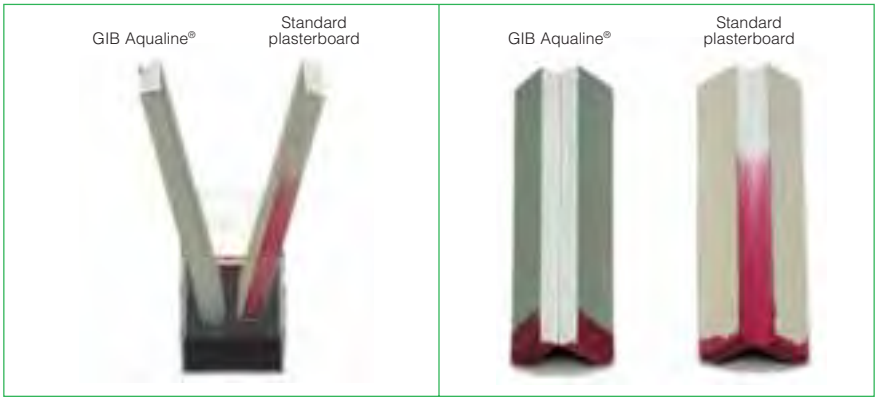

KDC - Approved Building Consent Document - BC170701 - Pg 60 of 91 - 11/01/2018 - kjn

Introduction/Design Considerations

GIB AQUALINE® *continued*

Where to Use GIB Aqualine®

Though not required by NZBC, it is highly desirable to include GIB Aqualine® in all areas at risk of water or moisture damage, in order to prolong the life expectancy of that space.

They include:

	WALLS	CEILINGS
BATHROOMS	✓	✓
SHOWERS	✓	✓
LAUNDRY	✓	✓
KITCHEN	✓	
TOILET	✓	

Benefits

- Water resistant and durable to help protect against water damage
- Proven substrate for paint, wallpaper, tiles, sheet vinyl and rigid sheet shower linings with installations in over 300,000 bathrooms in New Zealand
- Suitable for both residential and non-residential applications
- Dimensionally stable, will not buckle or warp, hence an excellent substrate for ceramic tiles
- Conventional jointing methods
- Easy to cut and form openings
- Contains fibreglass and other additives for strength and fire resistance
- May be used in GIB® Bracing, GIB® Fire Rated and GIB® Noise Control Systems (see Compliance with the NZBC, Clauses B1, C3 and G6). Consult the appropriate GIB® literature for installation details
- Green face paper for ease of recognition.

Sheet Dimensions and Weights

SHEET DIMENSIONS (ALL SHEETS 1200mm WIDE AND TE/TE)		MAXIMUM WEIGHT/m²
Thickness (mm)	**Length (mm)**	
10	2400, 2700, 3000, 3600	7.8kg
13	2400, 2700, 3000, 3600	10.2kg

Handling and Storage

- GIB Aqualine® must be stored under cover, stacked flat and clear of the floor with sufficient support to avoid sagging
- GIB Aqualine® must be handled as a finishing material.

APPRAISAL

The document entitled *GIB Aqualine® Wet Area Systems* 2007 has been appraised by BRANZ, Appraisal Certificate, No. 427 (2007).

COMPLIANCE WITH THE NEW ZEALAND BUILDING CODE (NZBC)

Structure – Clause B1

The design and material specification for steel and timber framing used in GIB Aqualine® systems must be in accordance with the performance requirements of NZBC Clause B1 (Structure). See Bracing in Wet Areas on page 5.

Durability – Clause B2

When installed and maintained in accordance with this literature, GIB Aqualine® tiled or vinyl covered systems have a serviceable life of at least 15 years. They comply with the requirements of NZBC Clause B2 (Durability) for use in wet areas directly exposed to liquid water, e.g. showers, showers over baths and splash-backs.

When used as a general wet area lining and maintained under normal dry internal conditions, GIB Aqualine® systems have a serviceable life of at least 50 years and comply with NZBC Clause B2 (Durability) for use within toilets, kitchens, bathrooms and laundries not directly exposed to liquid water.

Spread of Fire – Clause C3

GIB® Fire Rated Systems provide passive fire protection in accordance with the requirements of NZBC Clause C3 (Spread of Fire). When GIB Aqualine® is substituted into fire rated systems in place of the equivalent thickness GIB Fyreline®, the Fire Resistance Rating (FRR) of that system will be maintained.

KDC - Approved Building Consent Document - BC170701 - Pg 61 of 91 - 11/01/2018 - kjn

Design Considerations

MARCH 2007

COMPLIANCE WITH THE NEW ZEALAND BUILDING CODE (NZBC) *continued*

Internal Moisture – Clause E3

When installed in accordance with this literature, tiled or vinyl covered GIB Aqualine® systems may be used in areas directly exposed to liquid water, such as showers, to provide an impervious and easily cleaned wall surface. These systems comply with the requirements of NZBC Clause E3 (Internal Moisture).

Hazardous Building Materials – Clause F2

At no stage during handling, installation, or serviceable life does GIB Aqualine® constitute a health hazard. It therefore meets the provisions of NZBC Clause F2 (Hazardous Building Materials). Dust resulting from the sanding of stopping compounds may be a respiratory irritant and the use of a suitable facemask is recommended.

Ventilation – Clause G4

NZBC Clause G4 (Ventilation) requires buildings to have a means of collecting or otherwise removing steam generated from laundering, utensil washing, bathing or showering. To prolong the life of interior linings and surface finishes and to minimise the risk of moisture related problems such as condensation and mould growth, adequate heating and mechanical ventilation must be provided in kitchens, bathrooms and laundries.

Airborne and Impact Sound – Clause G6

GIB® Noise Control Systems can be used to provide ratings for Sound Transmission Class (STC) and Impact Insulation Class (IIC) in accordance with the requirements of NZBC Clause G6 (Airborne and Impact Sound). When GIB Aqualine® is substituted into GIB® Noise Control systems in place of the equivalent thickness GIB® Standard plasterboard or GIB Fyreline®, the STC and IIC rating of that system will be maintained. When GIB Aqualine® is substituted in place of the equivalent thickness GIB Noiseline®, a small performance loss may occur. For further information contact the GIB® Helpline 0800 100 442.

LIMITATIONS

- GIB Aqualine® must not be used for bracing purposes in shower cubicles or above baths (see Bracing in Wet Areas below)
- Do not use GIB Aqualine® where it may be exposed for extended periods to humidities of 90% RH and above. Such areas include group shower or steam rooms as well as moisture and chlorine rich environments such as indoor swimming pools
- GIB Aqualine® must not be directly applied to solid plaster (gypsum or cement), wood based sheet linings or similar materials, masonry or concrete. GIB Aqualine® may only be applied to these materials where timber strapping or steel furring channels are installed
- GIB Aqualine® must not be installed over a vapour barrier or a wall acting as a vapour barrier
- Cracked or damaged sheets must never be used
- GIB Aqualine® must not be used in external applications
- GIB® plasterboard must not be exposed to temperatures in excess of 52°C for prolonged periods. Heat-generating devices may include halogen lighting, cooking elements, radiant heating, solid fuel exhausts and fire surrounds. Consult the appliance manufacturer for installation details.

BRACING IN WET AREAS

Bracing elements are required to have a durability of 50 years. GIB® bracing elements are not to be located in shower cubicles or behind baths because of durability requirements, the likelihood of renovation, and practical issues associated with fixing bracing elements to perimeter framing members.

Otherwise, GIB® Bracing Systems can be used in water-splash areas as defined by NZBC Clause E3/AS1, provided these are maintained impervious for the life of the building.

GIB Aqualine® can be used in place of GIB® Standard plasterboard in GIB® bracing elements. GIB Aqualine® can be used in place of GIB Braceline® in GIB® bracing elements 900mm or longer, provided the perimeter of the element is fixed with GIB Braceline® Nails or GIB Braceline® screws at 100mm centres, using the GIB Braceline® corner fixing pattern.

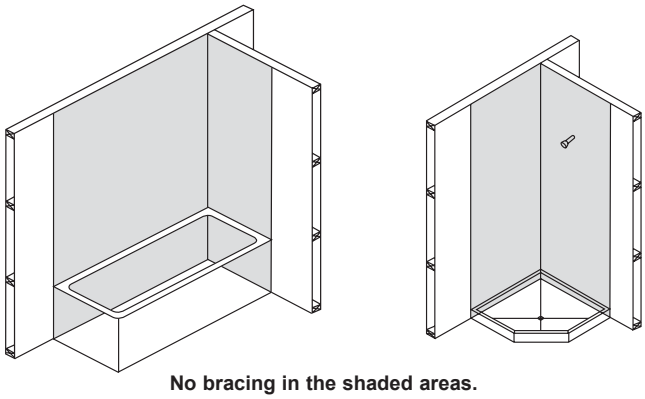

No bracing in the shaded areas.

KDC - Approved Building Consent Document - BC170701 - Pg 62 of 91 - 11/01/2018 - kjn

Design Considerations

MARCH 2007

NEW ZEALAND BUILDING CODE

E3.3.4 requires impervious and easily cleaned surfaces to all surfaces adjacent to sanitary fixtures or laundering facilities.

E3.3.5 requires that surfaces of building elements likely to be splashed or contaminated in the course of the intended use of the building must also be impervious and easily cleaned.

E3.3.6 requires that surfaces of building elements likely to be splashed must be constructed in a way that prevents water from penetrating behind linings or into concealed spaces (e.g. wall cavities).

Walls in wet areas therefore need to be addressed according to whether they fall within the scope of one of the following descriptions:

1. Wall surface likely to be splashed
2. Shower walls. Although not a requirement of NZBC it is highly recommended that the wall surfaces within 150mm of the top edge of a bath, and the vertical faces immediately under the edge of a bath, are treated in the same way as for a shower wall.

WALL SURFACES IN AREAS LIKELY TO BE SPLASHED

Suitable linings include:

a. Integrally waterproof sheet material (e.g. polyvinylchloride) with sealed joints
b. Ceramic or stone tiles having 6% maximum water absorption, waterproof grouted joints, and bedded with an adhesive specified by the tile manufacturer as being suitable for the tiles, substrate material and the environment of use
c. Cement based solid plaster or concrete having a steel trowel or polished finish (semi-gloss or gloss paint must be used if a paint finish is required)
d. Cork tile or sheet sealed with waterproof applied coatings
e. Monolithic applied coatings having a polished, non-absorbent finish (e.g. terrazzo)
f. Sheet linings finished with vinyl coated wallpaper, or semi-gloss or gloss coating
g. Water resistant sheet linings finished with decorative high pressure laminate or factory applied polyurethane or resin
h. Modular or multiple lining units which are themselves *impervious* and easily cleaned, and are installed with *impervious* joints
i. Timber or timber-based products such as particleboard sealed with waterproof applied coatings.

NB: Floor surfaces and floor/wall junctions are required by E3 to be impervious.

SURFACES IN SHOWERS AND AROUND BATHS

Suitable linings include all of the above, but **NOT including items (d) and (f) from the above list.**
Note that a waterproof membrane complying with AS/NZS 4858: 2004 **MUST** be applied to all lining materials used under ceramic tiles in these areas.
The waterproof membrane must extend to a 1500mm horizontal radius from a shower rose unless the shower is contained within a fixed enclosure. A shower curtain does not constitute a fixed enclosure.
Particleboard manufacturers recommend that in wet areas, panels should be protected with a suitable wet area membrane or an integrally waterproof sheet material. Some local authorities call for this treatment on all timber based floors. Local requirements should be checked before proceeding.
Dark grey shaded areas in the diagrams below represent the minimum extent of wall surfaces requiring impervious sheet materials or waterproof membranes prior to tiling. Light grey shaded areas represent good practice.

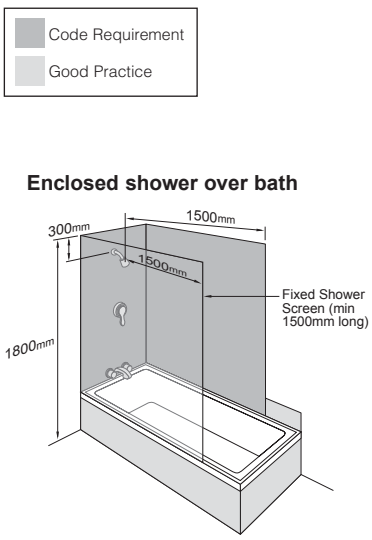

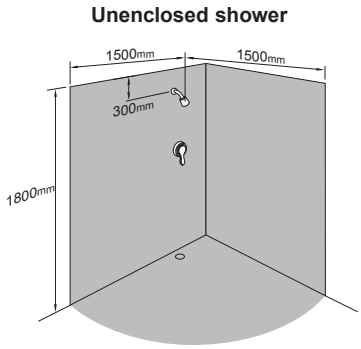

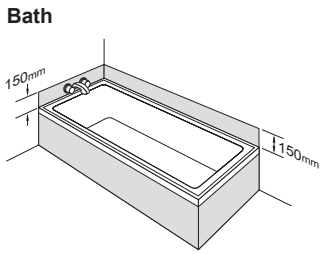

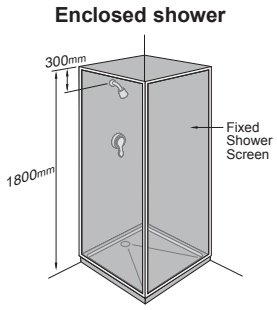

KDC - Approved Building Consent Document - BC170701 - Pg 63 of 91 - 11/01/2018 - kjn

Design Considerations

MARCH 2007

KDC - Approved Building Consent Document - BC170701 - Pg 64 of 91 - 11/01/2018 - kjn

WALL SURFACES SURROUNDING COOKTOPS

The protection of combustible surfaces surrounding gas cooking appliances is covered by NZS 5261. Consult the current version of this standard to ensure compliance.

However, as a guide the following options are acceptable for wall surfaces within 200mm of the periphery of a gas element to a height of 150mm above the element for the full dimension (width and depth) of the cooktop surface area:

- 5mm ceramic tiles on GIB® plasterboard
- 5mm toughened glass on GIB® plasterboard
- or any system that can be demonstrated to meet the requirements of Clause 2.6.2.6 of NZS5261.

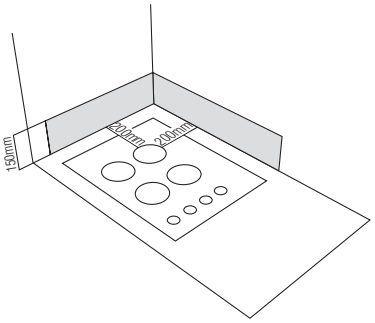

Because of the moisture generated by cooking, it is highly recommended that GIB Aqualine® is used in kitchen areas.

GIB® plasterboard products must not be exposed to temperatures in excess of 52°C for sustained periods. Check with the appliance manufacturer that this requirement will be met. However, it would be unusual for surfaces outside 200mm to exceed 52°C for sustained periods.

PENETRATIONS AND SEALANTS

As leaks and water ingress typically occur at junctions between building elements and at penetrations, it is essential that particular attention is given to these details at the time of installation. Lack of attention to detail can result in water damage that could remain undetected for a long time.

- Ensure that all cut-outs for pipe penetrations are made neatly, and slightly oversize, with a hole saw. These penetrations should be of a diameter no more than 12mm greater than that of the pipe
- Sealants should be of a mould inhibiting type and be neutral cure. Neutral cure silicones will generally meet these requirements
- Surfaces should be dry and free from dust before application, a minimum of a 4mm joint width provided and the depth should not exceed the width
- Gun a bead of silicone sealant to the full depth of the GIB Aqualine® in the following locations:
  - Around all tap/pipe bodies
  - The gap between the bath rim and the bottom edge of the GIB Aqualine®
  - Between the upstand of preformed shower bases and the bottom edge of the lining
  - Where an impervious junction is required at the floor/wall line, carefully seal the gap between the bottom edge of the board and the finished floor. Leave a 5-10mm gap at the bottom of the GIB Aqualine® wall lining for this purpose, ensuring the gap is free from dirt and dust
- Do not locate shower heads or taps on fire rated or intertenancy walls. Should this be unavoidable then refer to the publication *Penetrations in GIB® Fire Rated Systems*. Always use tested and approved proprietary solutions.

WATERPROOF MEMBRANES

- A waterproof membrane must be applied to **all** lining materials used as a substrate for ceramic tiles in a shower or shower over bath situation
- The wall surface in a shower or shower over bath situation is not complete and ready for tiling until coated with a waterproof membrane over the lining and the jointed areas shown shaded on page 6
- Only in-situ waterproofing materials which are manufactured to AS/NZS 4858:2004 "Wet Area Membranes" are recommended and applied to manufacturer's recommendations. Typically, these types of membranes are not suitable for paint and wallpaper finishes
- Waterproof membranes must be fully cured and dry prior to application of tiling adhesives
- Embed reinforcing mats in the membrane at all internal corners of the shower (including floor/wall junctions)
- Preformed sheet membranes are also available and may be more suitable where curing times or specialist skills are an issue
- The details shown in this technical literature are generic in nature. For accurate detailing, follow the specifications provided by the supplier of the proprietary waterproof membrane.

TILING

GIB Aqualine® is suitable as a substrate for tiling up to the following weights:

- 10mm GIB Aqualine® up to 20kg/m^2
- 13mm GIB Aqualine® up to 32kg/m^2.

Note: Most ceramic and porcelain tiles weigh less than 20kg/m^2.

For further information on tiling consult the BRANZ *Good Practice Guide – Tiling*.

Design Considerations

MARCH 2007

FLEXIBLE SHEET VINYL – SHOWERS AND OTHER WET AREAS

- GIB Aqualine® is a suitable substrate for flexible vinyl wall finishes in wet areas of residential, commercial or institutional buildings
- Framing requirements and installation procedures for the GIB Aqualine® substrate shall be as per page 10 or 11, except that the lining gap at the floor should be reduced to 5mm when a pencil cove detail is used
- The installation of galvanised steel reinforcing angles (32 x 32 x 0.55mm) behind internal GIB Aqualine® corners is recommended for sheet vinyl applications in showers or shower over bath situations (see illustration page 14)
- The GIB Aqualine® lining must be jointed and stopped to a paint quality finish (Level 4) – trowel marks can telegraph through even a commercial grade 2mm vinyl
- A commercial grade vinyl is recommended for the wall finish in commercial or institutional bathrooms and showers
- In areas directly exposed to liquid water, all joints in flexible sheet vinyl must be heat welded
- Installation of the flexible vinyl must be carried out strictly in accordance with the specifications provided by the suppliers/ manufacturers of the vinyl.

RIGID SHEET SHOWER LININGS

- The manufacturers/suppliers of thin (usually 2-3mm) and rigid acrylic shower linings commonly recommend direct adhesive fixing to wall linings using solvent-based adhesives
- Water temperature changes will cause movement of the thin acrylic sheet, which in turn will stress the adhesive and wall lining substrate
- **Do not preseal or paint** areas which are to be covered by the rigid shower linings
- The wall surface must be free of dust before installation of the lining
- Suppliers of rigid sheet acrylic shower linings recommend a minimum of 24 hours for the adhesive to cure fully prior to the shower being put into service
- Care must be taken to ensure that rooms are adequately ventilated and the adhesive is fully cured before the shower is used
- Consult the manufacturer/supplier of the shower lining for full installation details.

RENOVATIONS

Bathrooms, kitchens and laundries are the most renovated rooms in the house, partly due to fashion considerations and partly because of damage sustained by ingress of water and moisture within those spaces.
In most cases when renovating these rooms it is often easier and more cost-effective to remove the existing linings and replace them with GIB Aqualine®. This allows for a completely new start in the room and offers sound substrates for new surfaces such as tiling and painting, where otherwise flaking paint or damaged plasterboard may compromise good and sound finish or practice. At the very least re-lining will:

- Allow for inspection of framing where damage may have occurred and provide the opportunity to repair such damage
- Allow plumbing and electrics to be checked and altered or replaced where required
- Provide the opportunity to install thermal and acoustic insulation and water resistant linings where appropriate
- Make the job easier.

MAINTENANCE

Lack of maintenance is frequently the cause of premature and often very expensive failure of components and building elements within wet areas.
It is important to regularly inspect and repair any potential problem before it becomes a major problem and expensive to reinstate. Good maintenance should include:

- Ongoing ventilation. At the very least, good passive ventilation (e.g. window vents); but good active ventilation (e.g. extraction fans) of an appropriate size for the room is recommended
- Impervious coatings and surfaces should be checked for wear and damage and maintained and recoated before ingress of water to the substrate occurs
- Regular cleaning with appropriate cleaners so that build-up of matter, such as mould, is well controlled
- Sealants at junctions and penetrations should be checked for adhesion on a regular basis and replaced where adhesion failure to substrates occurs
- Where pipe leaks have become evident, however small, they should be repaired promptly and any area around such leaks dried out completely before any other repairs are carried out.

KDC - Approved Building Consent Document - BC170701 - Pg 65 of 91 - 11/01/2018 - kjn

Non-residential and Apartments

MARCH 2007

High-rise and commercial wet areas can generally be divided into four separate categories:

HIGH-RISE APARTMENTS AND INTERTENANCY

Wet areas in apartment complexes are generally covered by Clause E3 of the NZBC and will have the same requirements as shown for residential applications. However, apartment buildings will also involve intertenancy walls requiring noise control and fire resistance.

Generally, noise control and fire resistance are the first consideration and then the water resistance is added to those systems.

For noise control, GIB Aqualine® can substitute for the equivalent thickness GIB® Standard plasterboard or GIB Fyreline®.

For fire resistance, GIB Aqualine® can substitute for GIB Fyreline® of equivalent thickness.

In all cases the prescribed noise control or fire resistance system specifications must be followed completely as presented in the GIB® publications *GIB® Noise Control Systems* and *GIB® Fire Rated Systems*.

Refer to typical details on page 25.

The NZBC for intertenancy calls for special consideration to be given to preventing water from travelling from one tenancy to another. This calls for a waterproof membrane to all wet area floors with upstands to walls and the inclusion of floor wastes.

It is important to avoid penetrations such as taps, shower roses, etc. in intertenancy walls as this will compromise fire and noise ratings.

OFFICE, WORKPLACE AND SCHOOLS

These wet areas are generally no different in requirements to those shown in this publication or those of high-rise apartments, and are treated in the same manner.

As there is often a higher impact requirement in commercial applications, 13mm GIB Aqualine® is the minimum thickness recommended.

These areas are often finished in sheet vinyl or ceramic tiles and GIB Aqualine® is an ideal substrate, particularly in the case of sheet vinyl where a high quality finish is required to minimise telegraphing of imperfections in the substrate.

HEALTHCARE AND HOSPITALS

This industry will generally have special requirements for wet areas. GIB Aqualine® will generally satisfy specific design needs in healthcare facilities and in particular is an ideal substrate for the preferred finish of sheet vinyl.

PUBLIC AMENITIES AND SPORTS CLUBS

Public amenities and sports clubs often have a high demand for impact resistance, therefore 13mm GIB Aqualine® should be used, and suitable impact resistant wall coverings considered, such as heavy duty sheet vinyl or ceramic tiles over waterproof membrane to 1200mm high.

Also full consideration should be given to the usage of the amenity and whether high pressure or chemical cleaners will be used or if the amenity may be subject to vandalism.

Because of extreme humidity and presence of chemicals, GIB Aqualine® is not suitable for enclosed swimming pool areas.

Contact the GIB® Helpline on 0800 100 442 for further assistance.

KDC - Approved Building Consent Document - BC170701 - Pg 66 of 91 - 11/01/2018 - kjn

Non-tiled Walls – Timber Framing

MARCH 2007

If bracing, noise control or fire rating considerations exist, consult the relevant GIB® technical publication, e.g. *GIB® Fire Rated Systems, GIB® Noise Control Systems, GIB® Bracing Systems*, for the appropriate information.

Wall Framing

Framing dimensions must comply with the requirements of NZS 3604:1999.

- The moisture content of timber framing shall be 18% or less at the time of lining
- Studs shall be spaced at 600mm centres maximum for both 10mm and 13mm GIB® plasterboard
- Nogs to be evenly spaced with a maximum spacing of 1350mm. Alternatively, nogs may be staggered 150mm maximum either side of a horizontal joint line
- Nogs are not required behind horizontal joints except in shower situations or specific fire or noise control systems.

Fasteners

- 10mm GIB Aqualine® – minimum 25mm x 6g GIB® Grabber® High Thread Drywall Screws or 30mm x 2.8mm GIB® Nails
- 13mm GIB Aqualine® – minimum 32mm x 6g GIB® Grabber® High Thread Drywall Screws or 30mm x 2.8mm GIB® Nails.

Fastener Centres

- 300mm centres to top and bottom plates and to perimeter studs
- Single fasteners to each stud where the horizontal joint crosses the studs
- Place fasteners 12mm from sheet edges
- Daubs of GIBFix® adhesive at 300mm centres to intermediate studs
- Do not place adhesive at sheet edges or under fasteners. Sheet edges at door or window openings can be adhesive fixed unless forming part of the perimeter of a bracing element.

Lining

- Install the sheets leaving a 5-10mm gap at the floor line to allow for movement of the framing members and to allow for cleaning dirt and rubbish before sealing
- Sheets to be touch fitted.

Jointing

- Jointing shall be carried out in accordance with the instructions in the *GIB® Site Guide*; GIB® AquaMix is recommended for the first two coats.

Fastening the Linings – Horizontal Fixing Only

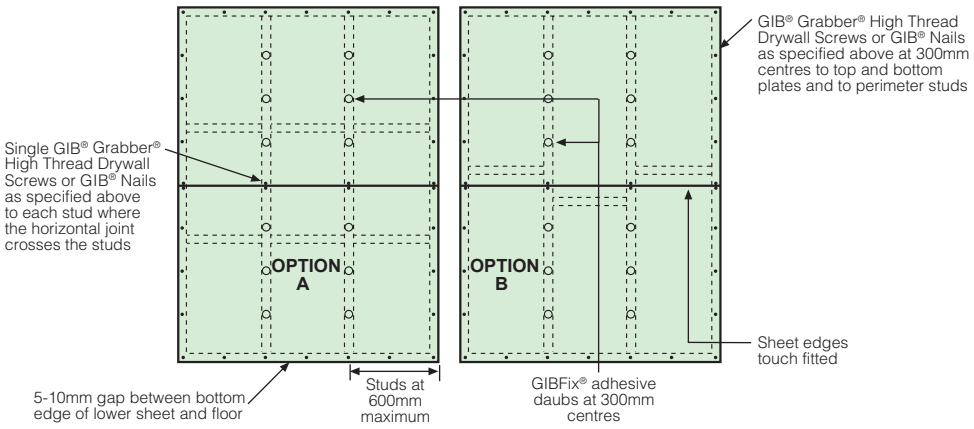

Fastening the Linings – Vertical Fixing Only

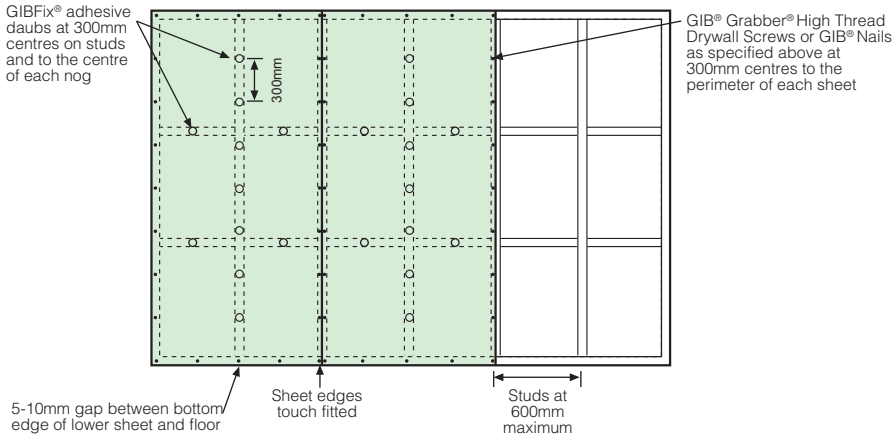

KDC - Approved Building Consent Document - BC170701 - Pg 67 of 91 - 11/01/2018 - kjn

Non-tiled Walls – Steel Framing

MARCH 2007

The minimum sheet thickness for fixing on light gauge steel framing is 13mm GIB® plasterboard.
Steel framing for residential construction is by specific design.
If noise control or fire rating considerations exist, consult the relevant GIB® technical publication (e.g. *GIB® Fire Rated Systems or GIB® Noise Control Systems)* for the appropriate information.

Wall Framing

- Steel stud dimensions to be minimum 63 x 34 x 0.55mm nominal with a 6mm return
- Steel channel dimensions to be minimum 63 x 30 x 0.55mm nominal
- Studs shall be spaced at 600mm centres maximum
- Ensure that the studs are placed with the open side facing in the same direction (see *GIB® Site Guide*).

Fasteners

- 25mm x 6g GIB® Grabber® Self Tapping Drywall Screws.

Fastener Centres

- 300mm centres to top and bottom channels and to end studs
- Single screws to each stud where the horizontal joint crosses the studs
- Place fasteners 12mm from sheet edges
- Daubs of GIBFix® All-Bond adhesive OR screws at 300mm centres to intermediate studs
- Do not place adhesive at sheet edges or under fasteners. Sheet edges at door or window openings can be adhesive fixed.

Lining

- Lay the sheets, leaving a 5-10mm gap at the floor line.
  Note: If friction fitted steel studs have been used, sheets must be fitted hard to the floor. Ensure floor is cured and dry
- Sheets to be touch fitted.

Jointing

- Jointing shall be carried out in accordance with the instructions in the *GIB® Site Guide*. GIB® AquaMix is recommended for the first two coats.

Fastening and Jointing the Linings – Horizontal Fixing

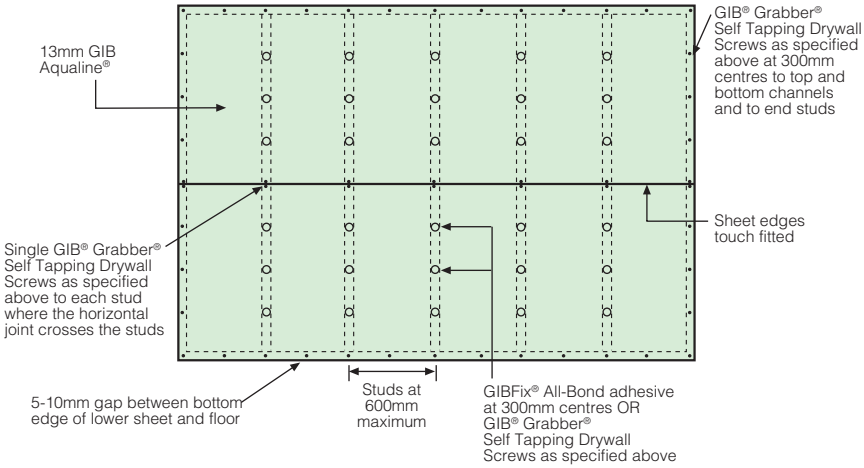

Fastening and Jointing the Linings – Vertical Fixing

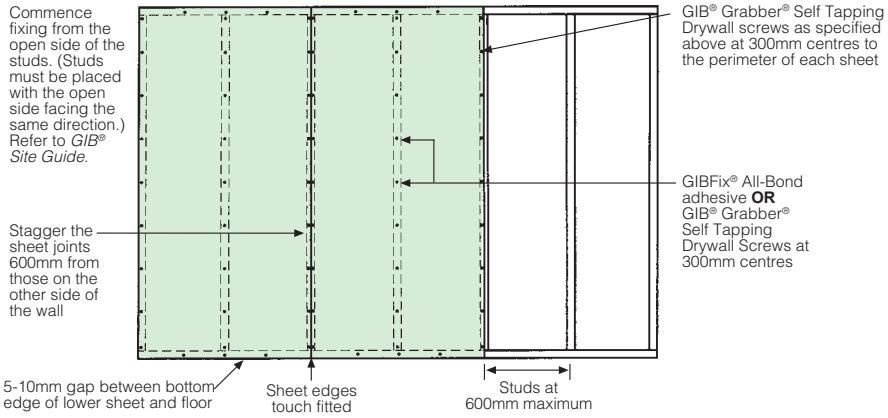

KDC - Approved Building Consent Document - BC170701 - Pg 68 of 91 - 11/01/2018 - kjn

Tiled Walls

MARCH 2007

Important: See page 6 and 7 for waterproof membrane requirements.

Wall Framing

Framing dimensions and spacing must comply with the requirements of NZS 3604:1999 or relevant NZ Standard.

- Prior to lining in tiled areas (shower cubicles and shower over bath only) the internal corners shall be reinforced with a minimum 32 x 32 x 0.55mm galvanised metal angle. Each side of the angle shall be fastened to the framing with 30mm galvanised clouts at 300mm centres
- Steel stud systems do not generally require nogs except as below:
  - Adjacent to each pipe penetration and behind sink and tub flashings
  - Between all studs above bath flanges and preformed shower bases
- For impact protection in shower cubicles or shower over bath situations it is important that all sheet joints are made on solid framing. This may require either vertical fixing of the GIB Aqualine® or the installation of some additional nogs.

Fasteners

- For 10mm GIB Aqualine® use minimum 25mm x 6g GIB® Grabber® Drywall Screws
- For 13mm GIB Aqualine® use minimum 32mm x 6g GIB® Grabber® Drywall Screws.

Fastener Centres

- GIB® Grabber® Drywall Screws at 100mm centres to perimeter of wall and to all intermediate studs
- Adhesive is not to be used in place of mechanical fastenings.

Lining

- 10mm or 13mm GIB Aqualine® is suitable for use on timber framing and for tile weights up to 20kg/m²
- 13mm GIB Aqualine® must be used for tile weights between 20 and 32kg/m² and when light steel framing has been used
- GIB Aqualine® may be fixed vertically or horizontally
- Provide a 5-10mm gap at the wall/floor junction
- Provide a 5-10mm gap between the bottom edge of the GIB Aqualine® and any bath rim or preformed shower base to allow for placement of sealant
- GIB Aqualine® sheets shall be touch fitted
- Where the framing or fastener centres required for tiled areas are closer than those specified for GIB® Fire Rated and GIB® Noise Control Systems, the tiling specification shall prevail. Where relevant, check that fastener lengths comply with the requirements of GIB® Fire Rated Systems or GIB® Noise Control Systems.

Jointing

- Jointing shall be carried out in accordance with instructions in the *GIB® Site Guide*
- Water resistant GIB® AquaMix is recommended for the first two coats
- No top coat is required.

Fastening the Linings – Horizontal Fixing in Tiled Areas

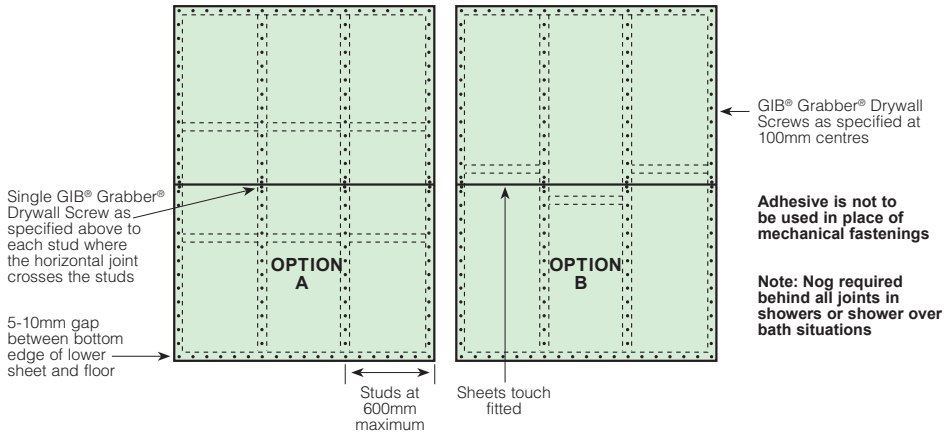

Note:

GIB Aqualine® is suitable for tiling to full height of walls, but if a wall is to be partially tiled (i.e. half high), only the area of wall under the tiles needs to be fixed as above. The remainder of the wall may be fixed as for non-tiled area (see page 10 & 11).

KDC - Approved Building Consent Document - BC170701 - Pg 69 of 91 - 11/01/2018 - kjn

Ceilings

MARCH 2007

KDC - Approved Building Consent Document - BC170701 - Pg 70 of 91 - 11/01/2018 - kjn

Ceiling Framing

Framing dimensions and spacing must comply with the requirements of NZS 3604:1999 or relevant NZ Standard.
If bracing, noise control, fire rating considerations exist consult the relevant GIB® publication for appropriate information.

Fasteners

- Steel battens – 25mm x 6g GIB® Grabber® Self Tapping Drywall screws
- Timber battens or Joists – 32mm x 6g GIB® Grabber High Thread Drywall screws.

Adhesives

- Steel battens – GIBFix® All-Bond
- Timber battens – GIBFix® Wood Bond (not suitable for LOSP treated timber).

Fasteners Centres

- Single screws to the edges and centre of the sheets across each batten
- Screws to be 12mm from sheet edges
- Daubs of adhesive at 200mm centres between the screws
- Do not place adhesive at sheet edges or under fasteners, this may lead to screw or nail pops.

Lining

- The lining shall be fixed at right angles to the battens or joists
- Commence fixing from the centre of the sheets outwards
- Sheets to be touch fitted
- Use long length sheets to minimise sheet end butt joints
- Back-block sheet end butt joints
- See GIB® Site Guide for sheet edge backblocking requirements.

Batten Spacings

- 13mm GIB Aqualine® plasterboard – 600mm centres max
- 10mm GIB Aqualine® plasterboard – 450mm centres max.

Jointing

- All sheet joints must be paper tape reinforced and stopped in accordance with instructions in the *GIB® Site Guide*. Water resistant GIB® AquaMix is recommended for the first two coats.
- Do not fix tiles to GIB® plasterboard ceilings.

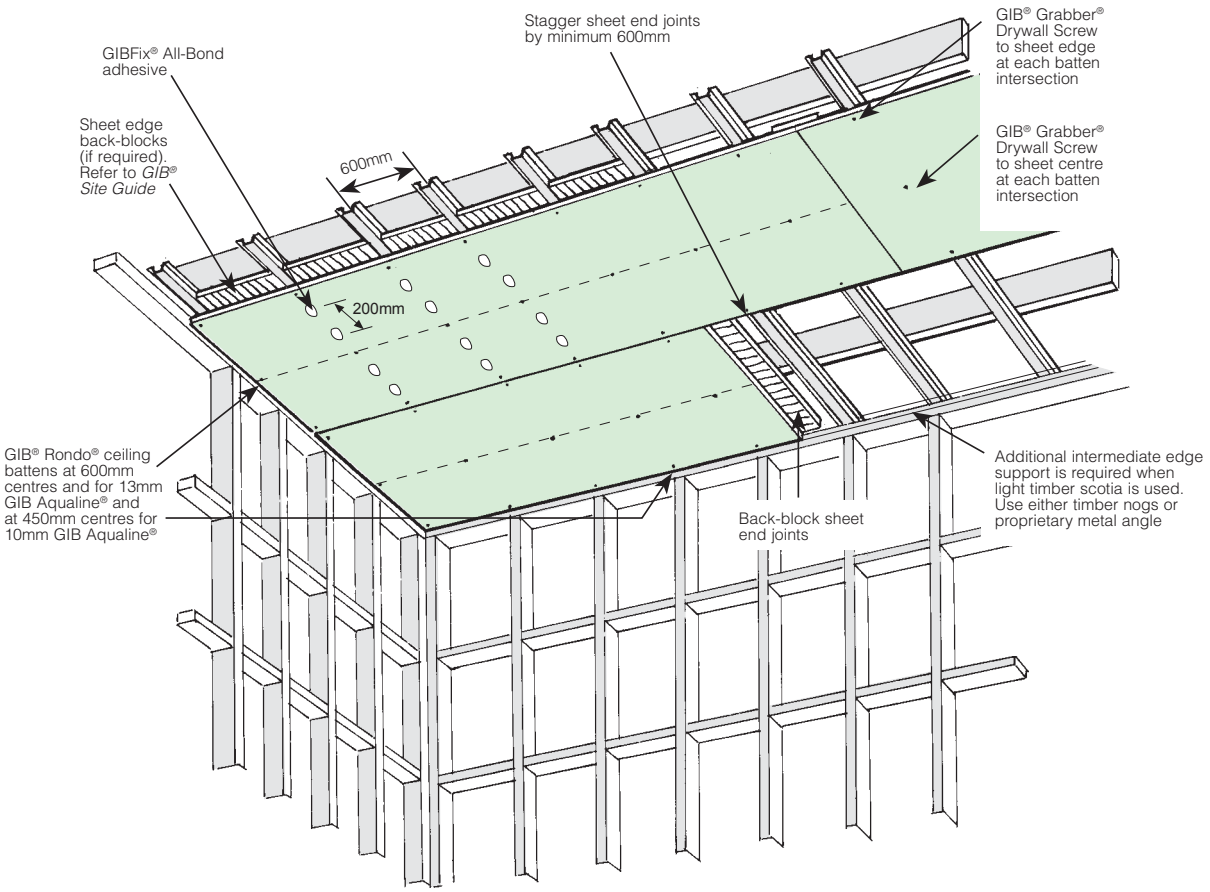

Shower Over Bath – Tiled Walls

MARCH 2007

KDC - Approved Building Consent Document - BC170701 - Pg 71 of 91 - 11/01/2018 - kjn

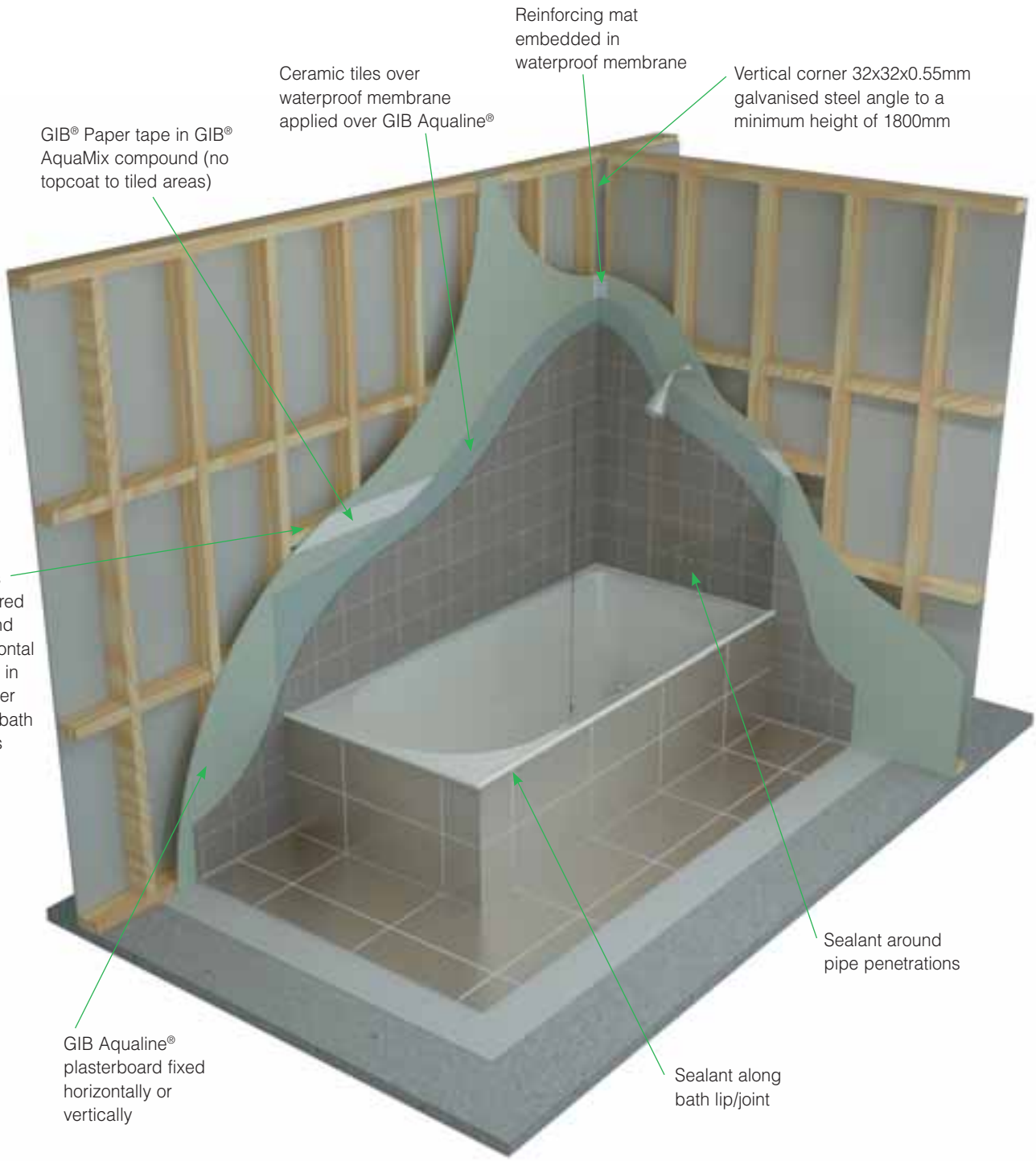

Run a bead of silicone sealant around the mixer unit on the tiles extending below the bottom of the pipe aperture.

For typical details, see the following pages.

Shower Over Bath – Tiled Walls

MARCH 2007

KDC - Approved Building Consent Document - BC170701 - Pg 72 of 91 - 11/01/2018 - kjn

A GAW-D001

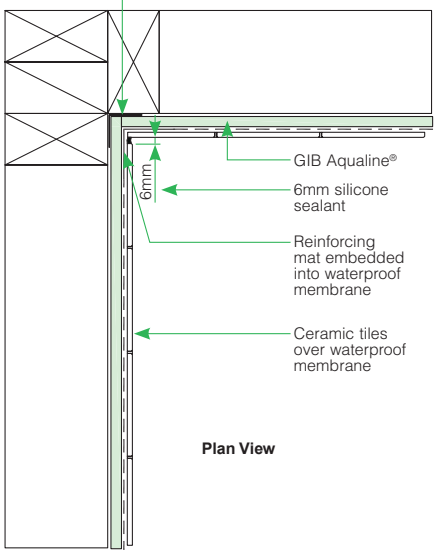

Plan View

B GAW-D002

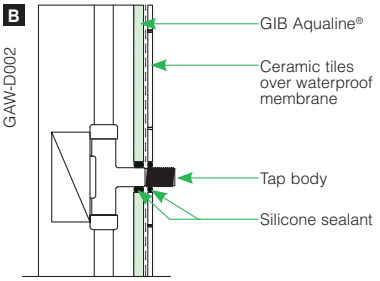

Note:
Where impact noise from pipes is an issue, fix all pipes on resilient brackets.

C GAW-D003

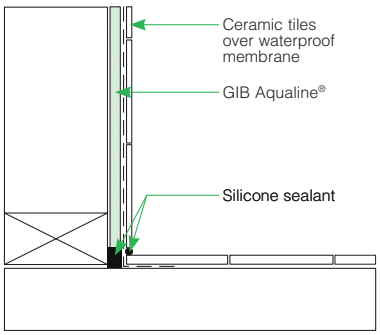

D GAW-D004

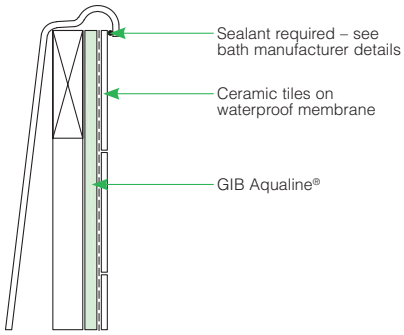

E GAW-D005

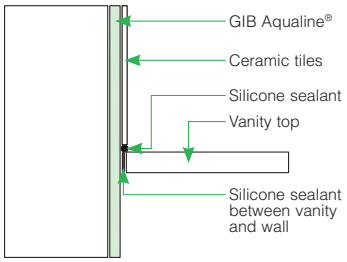

F GAW-D006

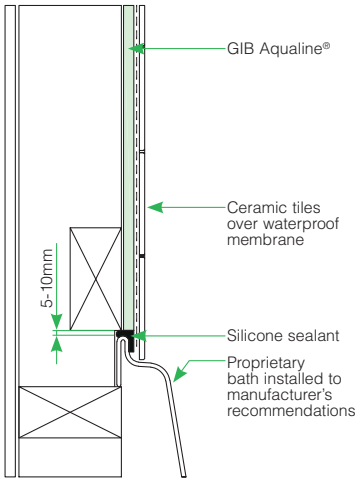

Shower Over Bath – Acrylic Liner

MARCH 2007

KDC - Approved Building Consent Document - BC170701 - Pg 73 of 91 - 11/01/2018 - kjn

A GAW-D007

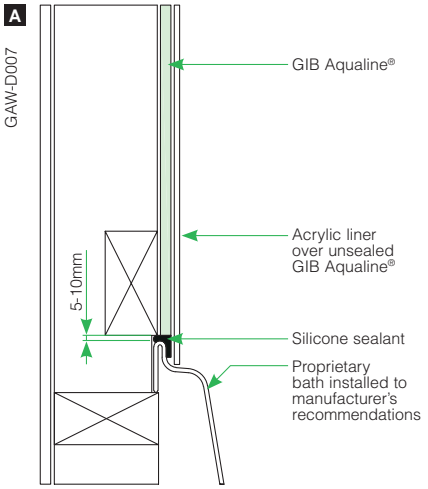

B GAW-D008

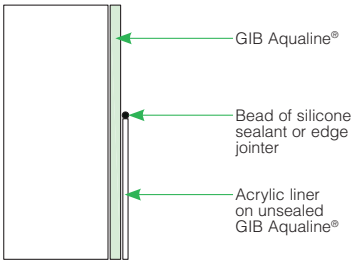

C GAW-D009

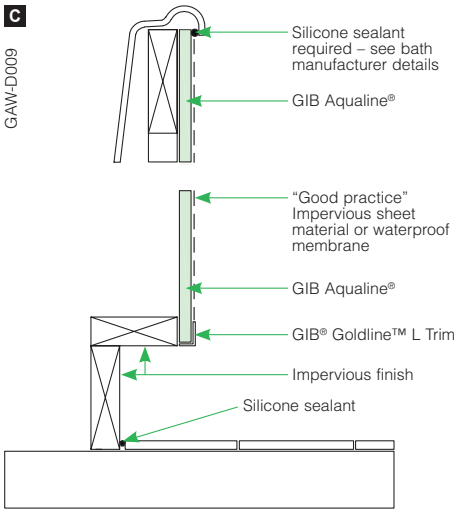

D GAW-D010

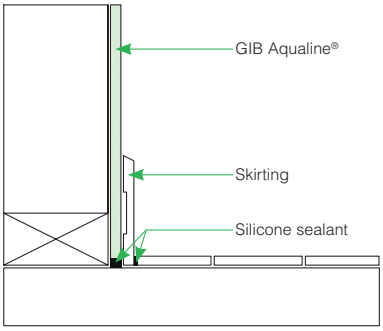

E GAW-D011

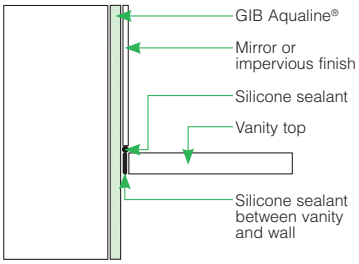

F GAW-D012

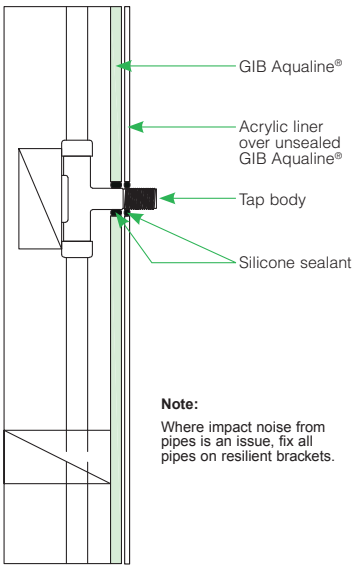

Note:
Where impact noise from pipes is an issue, fix all pipes on resilient brackets.

Bath – Tiled Upstand

MARCH 2007

A GAW-D013

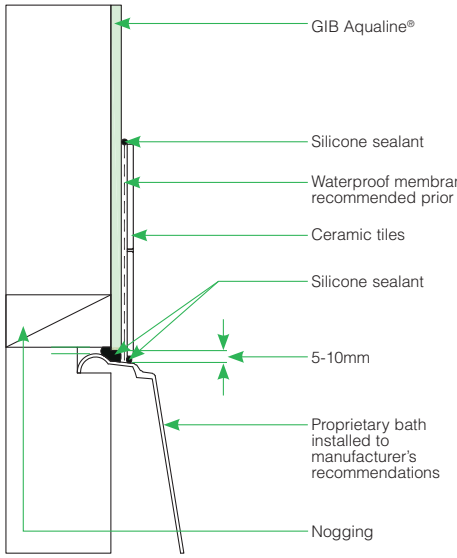

B GAW-D014

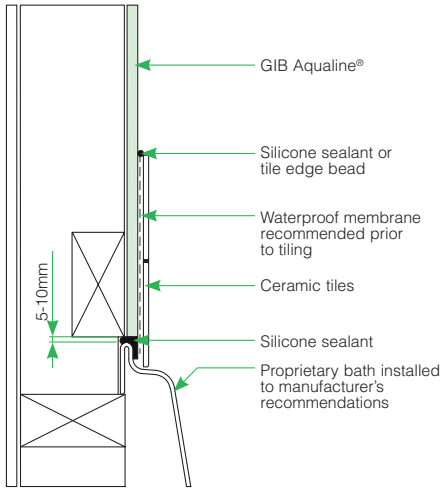

C GAW-D015

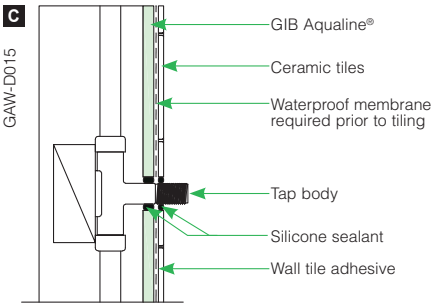

Note:
Where impact noise from pipes is an issue, fix all pipes on resilient brackets.

D GAW-D016

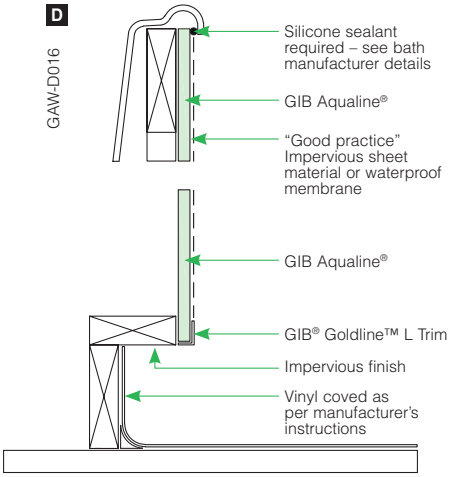

E GAW-D017

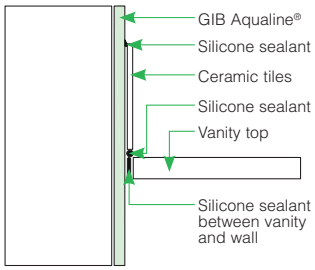

KDC - Approved Building Consent Document - BC170701 - Pg 74 of 91 - 11/01/2018 - kjn

Shower – Tiled Walls and Base

MARCH 2007

KDC - Approved Building Consent Document - BC170701 - Pg 75 of 91 - 11/01/2018 - kjn

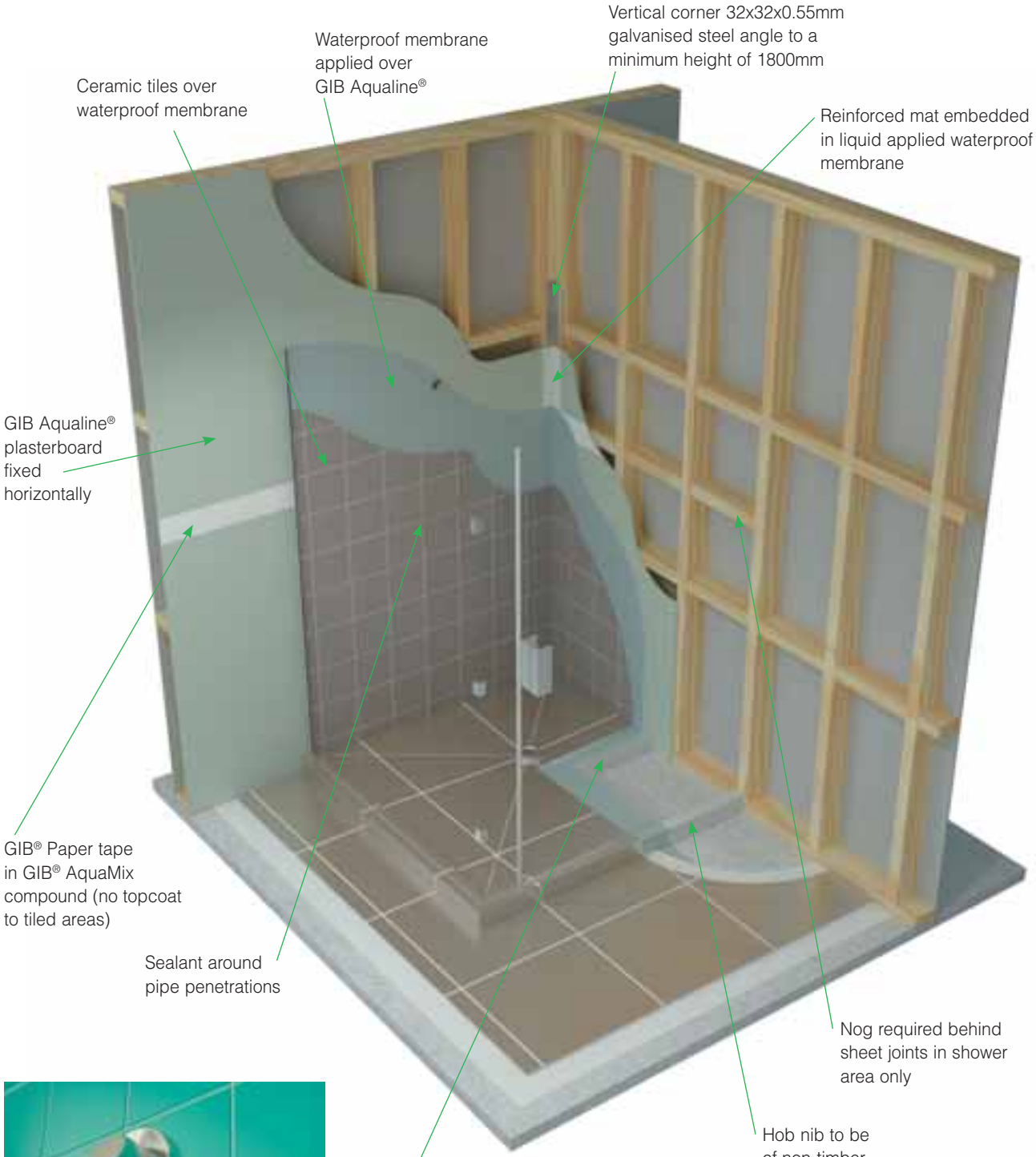

Run a bead of silicone sealant around the mixer unit on the tiles extending below the bottom of the pipe aperture.

For typical details, see the following pages.

KDC - Approved Building Consent Document - BC170701 - Pg 76 of 91 - 11/01/2018 - kjn

Shower – Tiled Walls and Base

MARCH 2007

A GAW-D018

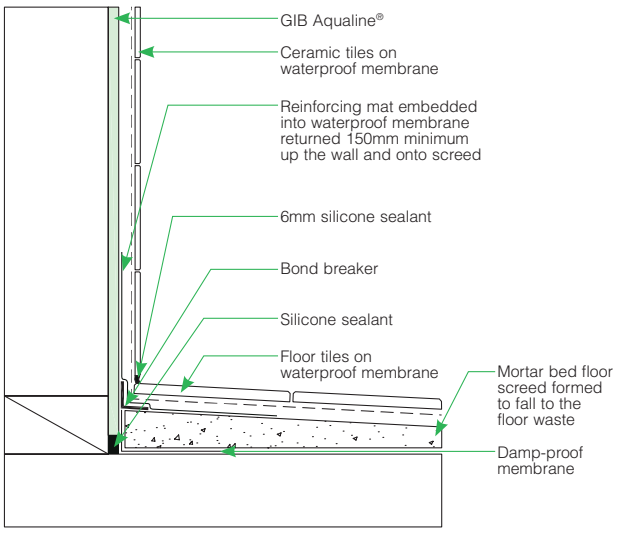

B GAW-D019

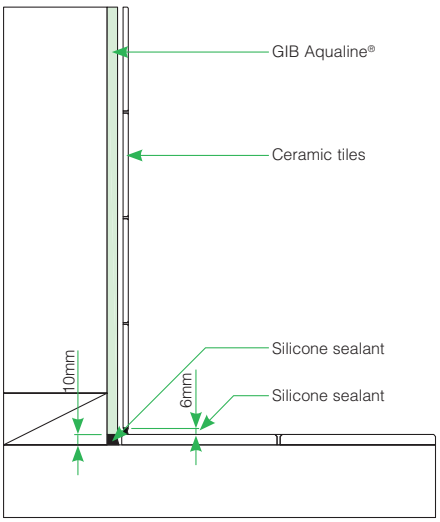

C GAW-D020

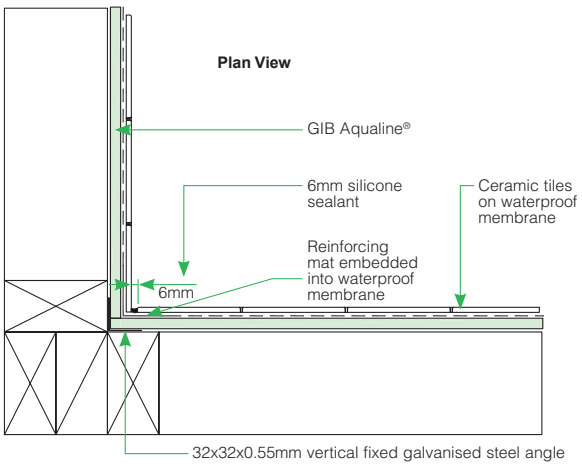

D GAW-D021

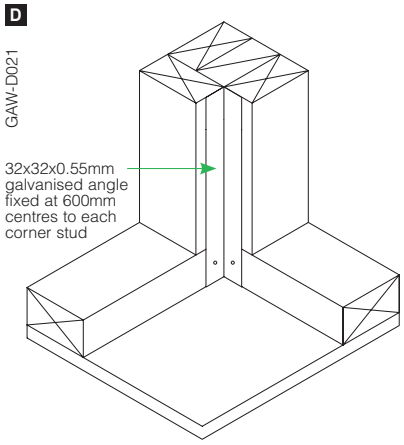

E GAW-D022

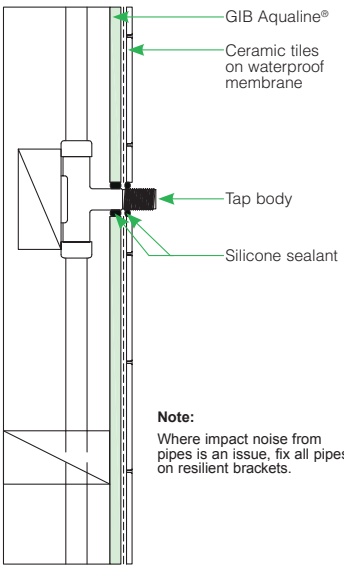

Note:
Where impact noise from pipes is an issue, fix all pipes on resilient brackets.

Shower – Tiled Walls and Acrylic Base

MARCH 2007

A

GAW-D023

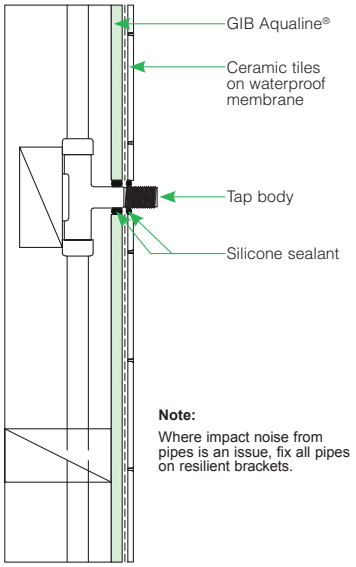

B

GAW-D024

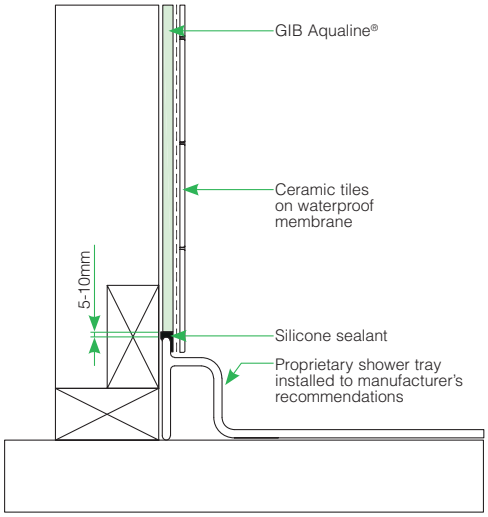

C

GAW-D025

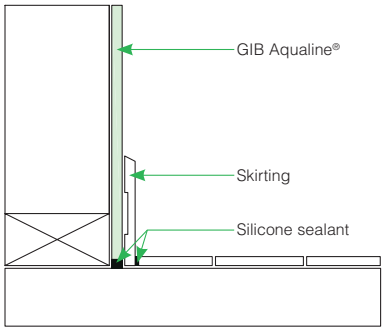

D

GAW-D026

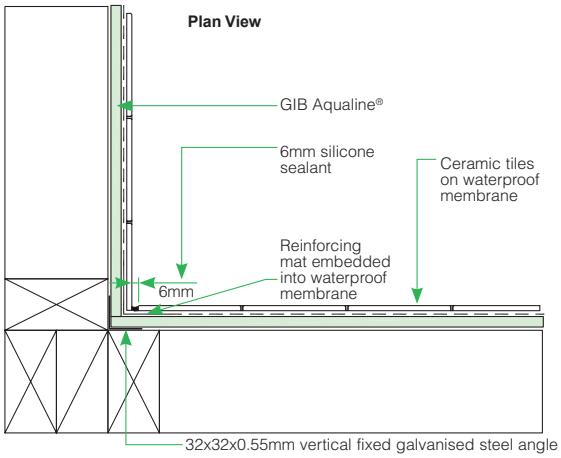

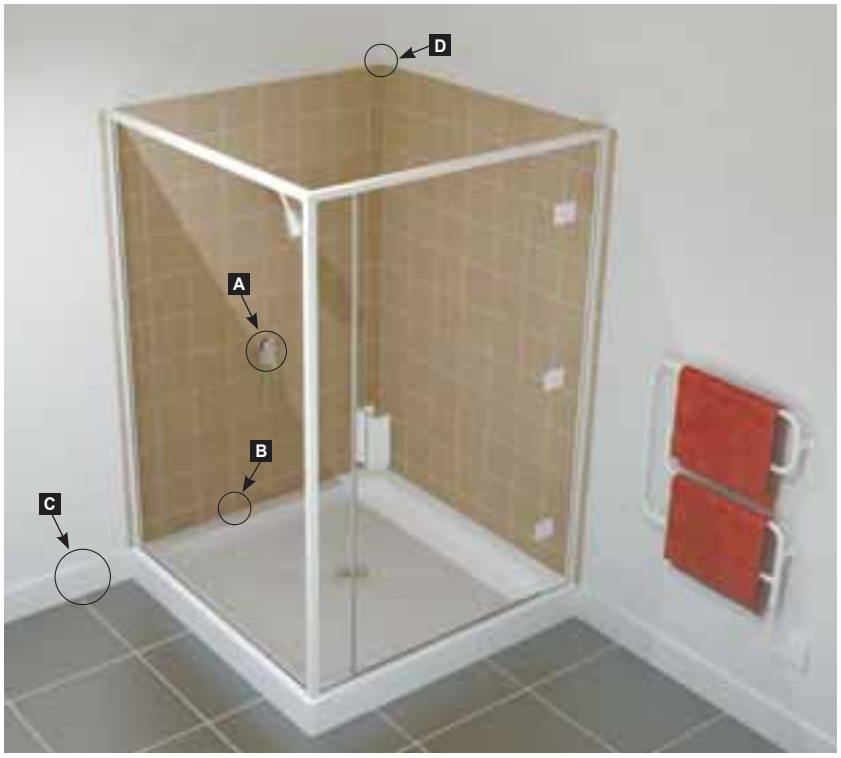

KDC - Approved Building Consent Document - BC170701 - Pg 77 of 91 - 11/01/2018 - kjn

Shower – Acrylic Liner and Base

MARCH 2007

KDC - Approved Building Consent Document - BC170701 - Pg 78 of 91 - 11/01/2018 - kjn

A

GAW-D027

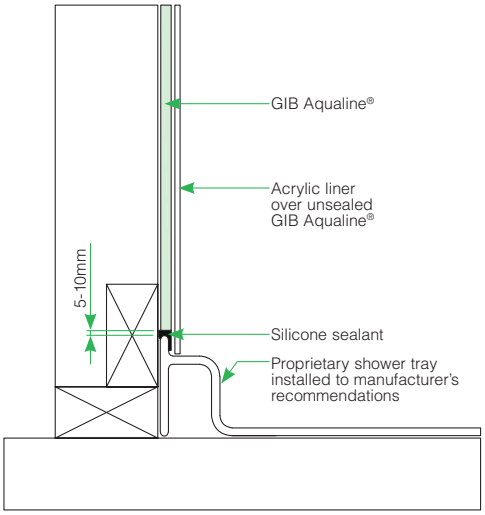

B

GAW-D028

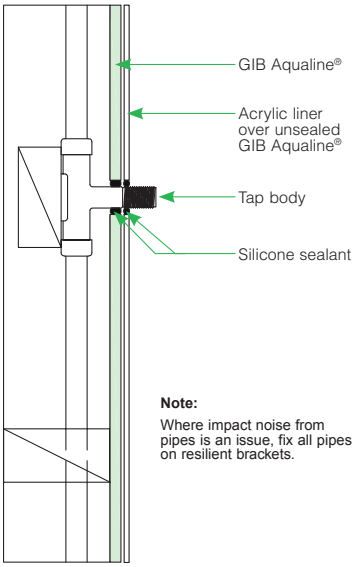

Note:
Where impact noise from pipes is an issue, fix all pipes on resilient brackets.

C

GAW-D029

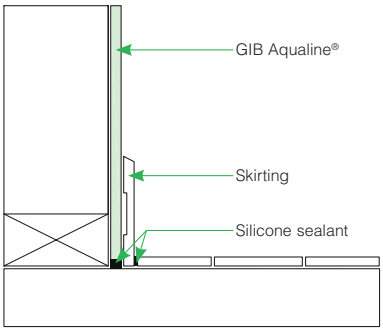

D

GAW-D030

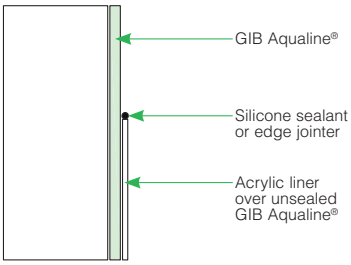

Kitchen and Laundry

MARCH 2007

A

GAW-D031

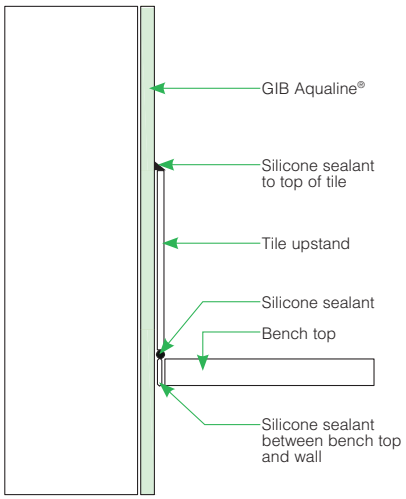

B

GAW-D032

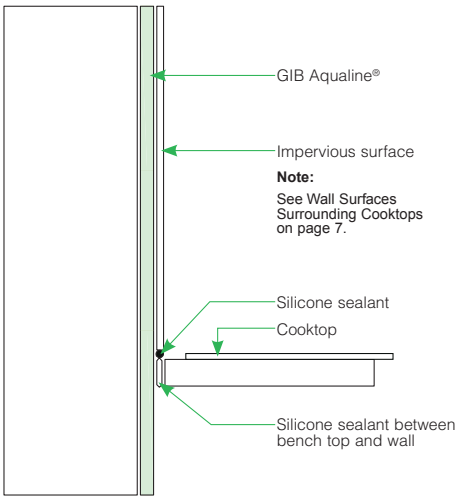

C

GAW-D033

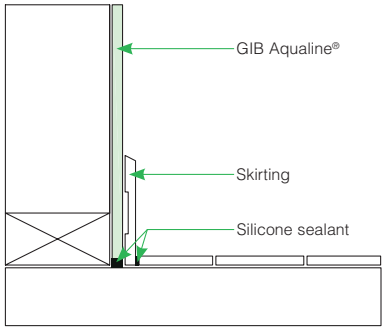

KDC - Approved Building Consent Document - BC170701 - Pg 79 of 91 - 11/01/2018 - kjn

Office, Workplace or School Bathroom

MARCH 2007

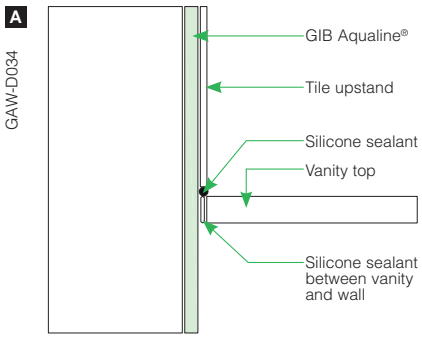

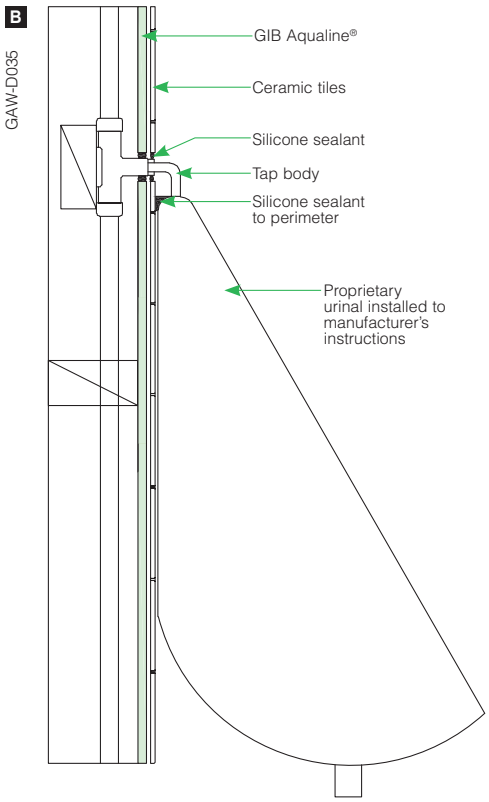

KDC - Approved Building Consent Document - BC170701 - Pg 80 of 91 - 11/01/2018 - kjn

Healthcare and Hospital Bathroom

MARCH 2007

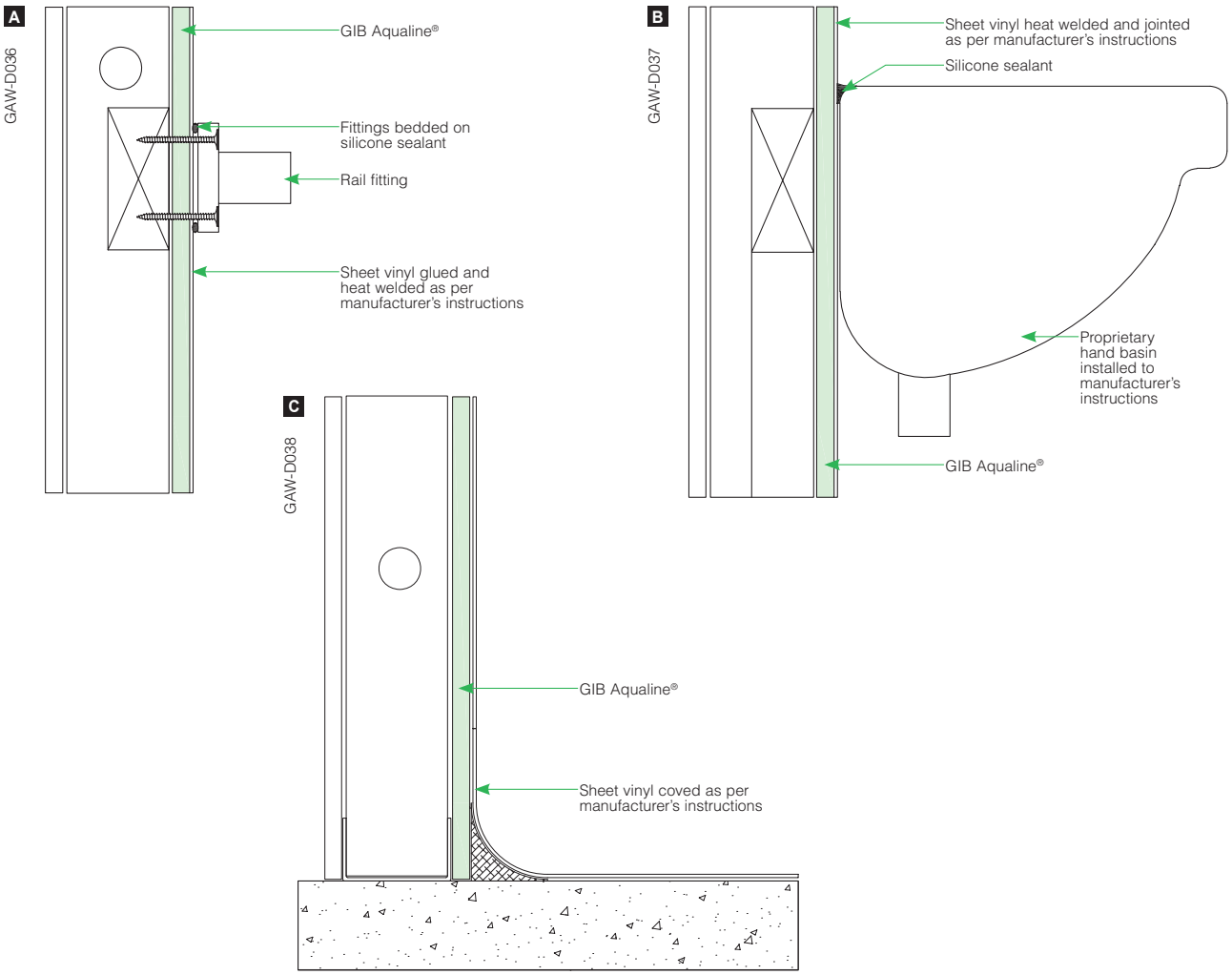

KDC - Approved Building Consent Document - BC170701 - Pg 81 of 91 - 11/01/2018 - kjn

Fire Rated and Noise Control

MARCH 2007

Shower – Acrylic Liner

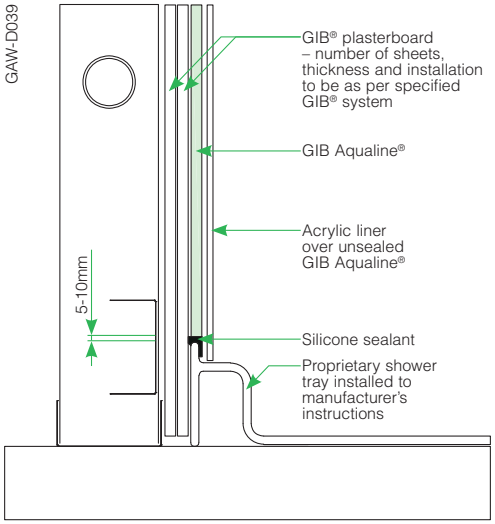

Shower – Tiled Walls

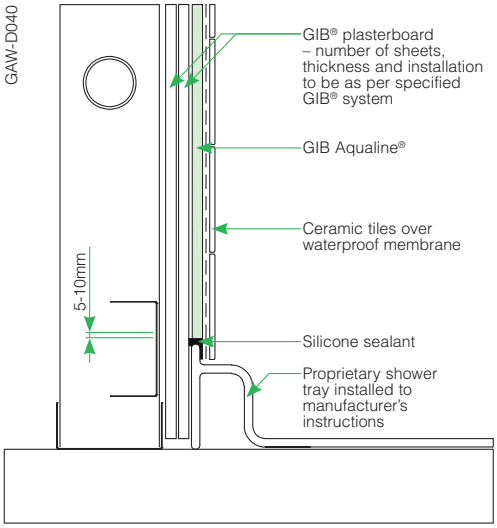

Shower Over Bath – Acrylic Liner

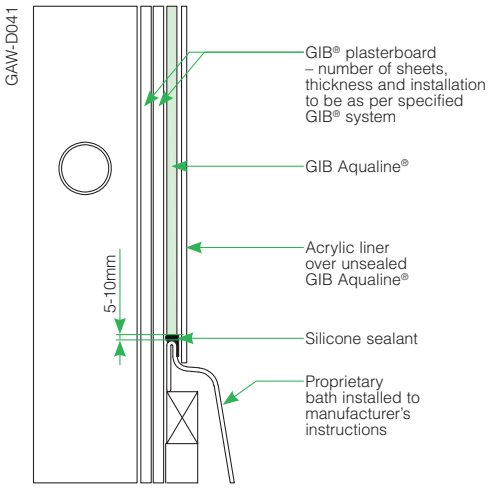

Shower Over Bath – Tiled Walls

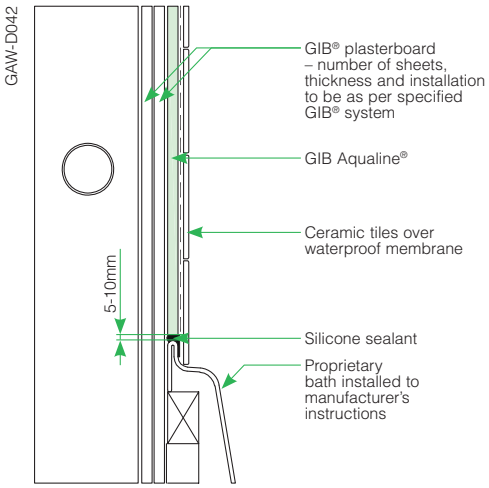

GIB Aqualine® Fire Resistance and Noise Control Performance

When GIB Aqualine® is substituted into GIB® Fire Rated systems in place of the equivalent thickness GIB Fyreline®, the Fire Resistance Rating (FRR) of that system will be maintained.

When GIB Aqualine® is substituted into GIB® Noise Control systems in place of the equivalent thickness GIB® Standard plasterboard or GIB Fyreline®, the STC and IIC rating of that system will be maintained. When GIB Aqualine® is substituted in place of the equivalent thickness GIB Noiseline®, a small performance loss may occur. For further information contact the GIB® Helpline on 0800 100 442.

KDC - Approved Building Consent Document - BC170701 - Pg 82 of 91 - 11/01/2018 - kjn

Specification and Installation Checklist

MARCH 2007

Contract ID	
Site Address	
Client Name	
Designer	
Builder	
Plasterboard Installer	
Plasterboard Supplier	
Tiler	
Shower Installer	

DESIGNER	YES	NO	CHECKED BY	DATE
GIB Aqualine® specified for wet areas and appropriate details included on plans?				
Are tiled areas clearly shown on plans?				
Is area requiring waterproof membrane clearly shown on plan?				
Is the waterproof membrane required to be installed by a licensed applicator? If so, is this noted on the documentation?				
No bracing behind shower or bath?				
BUILDER	**YES**	**NO**	**CHECKED BY**	**DATE**
Galvanised steel angle installed to the internal corners of tiled shower?				
All sheet joints in showers to be made on solid timber. This may require some additional dwangs for horizontal board installation.				
PLASTERBOARD INSTALLER	**YES**	**NO**	**CHECKED BY**	**DATE**
10mm GIB Aqualine® for tiles up to 20kg per m^2?				
13mm GIB Aqualine® for tiles up to 32kg per m^2?				
GIB Aqualine® mechanically fastened at 100mm centres when tiles are to be installed?				
All junctions between GIB Aqualine® and walls, floors, baths, showers and other elements are correctly sealed with appropriate sealant?				
Pipe penetrations sealed?				
PLASTERBOARD STOPPER	**YES**	**NO**	**CHECKED BY**	**DATE**
Air drying compound (e.g. GIB ProMix® or GIB Plus 4®) not to be used on areas to be tiled.				
Recommended that GIB® AquaMix is used in wet areas.				
TILER	**YES**	**NO**	**CHECKED BY**	**DATE**
Waterproof membrane applied to shower areas prior to tiling?				
SHOWER INSTALLER	**YES**	**NO**	**CHECKED BY**	**DATE**
GIB Aqualine® walls must not be sealed or painted under where acrylic linings are to be installed.				
Ensure GIB Aqualine® is free from dust before installation of acrylic liners.				
Sealant applied to top edge of acrylic shower linings?				
BUILDER/PLUMBER	**YES**	**NO**	**CHECKED BY**	**DATE**
Sealant applied under penetration face covers?				

KDC - Approved Building Consent Document - BC170701 - Pg 83 of 91 - 11/01/2018 - kjn

JESANI®
WETROOM DESIGN SOLUTIONS

KDC - Approved Building Consent Document - BC170701 - Pg 84 of 91 - 11/01/2018 - kjn

JESANI®

PRODUCT

INSTALLATION

AND

TECHNICAL

LITERATURE

DOOR CHANNEL

BRANZ Appraised
Appraisal No.934 [2016]

© Jesani Ltd 2016

30 Nov 16

JESANI®
WETROOM DESIGN SOLUTIONS

KDC - Approved Building Consent Document - BC170701 - Pg 85 of 91 - 11/01/2018 - kjn

JESANI® DOOR CHANNEL

Product Description

The Jesani® Door Channel is the new innovative linear channel floor waste drain to supersede all other floor wastes.

The channel protects the dry areas of your property by sitting across the exit between the wet/dry area zone and captures all the overflow of wet area water.

Manufactured from grade 304 or 316 (on request) stainless steel, the linear channel sits at the base of the door frame and the functional flange design creates a more comprehensive waterproofing infrastructure, which is critical for any construction project.

The channel is also easy to install and in comparison to other floor waste installations and this will considerably reduce time and expense for all trades involved.

With the proficiency of the Jesani® Door Channel system, it has now created an additional insurance policy against future water damage claims to your valuable asset.

The Door Channels are available to fit in 4 standard door sizes, however we can manufacture custom made channels to fit your specific requirements.

Stock available size lengths in 304 Stainless Steel:

705mm

755mm

805mm

855mm

Simply create a 55mm wide slot in the flooring inside the door frame, ensuring there is space for the outlet to sit clear. The flanges support the channel above floor level.

Please note the pictures above are indicative only for the cut slot in flooring

© Jesani Ltd 2016

JESANI®
WETROOM DESIGN SOLUTIONS

KDC - Approved Building Consent Document - BC170701 - Pg 86 of 91 - 11/01/2018 - kjn

Technical Specification

The Jesani® Door Channel is manufactured from Grade 304 or 316 (on request) stainless steel with welded ends. The troughs are 40-50mm high (dependant on tile thickness) x 40mm wide and vary in length to suit the door width. The 50mm diameter floor waste pipe connection can be positioned anywhere along the trough to suit the layout.

For installation of a door channel under a cavity slider, please ensure you know the cavity door opening before ordering your door channel, or call to discuss.

If you are working with vinyl floor coverings, please indicate this when ordering your door channel.

For the accessories required for installation, please refer to BRANZ Appraisal No. 934(2016) Technical Specification, Paragraph 4.2.

Technical Drawings

Please see attached for both tile and vinyl floor drawings.

© Jesani Ltd 2016

JESANI® STAINLESS STEEL DOOR CHANNEL FOR TILED FLOOR

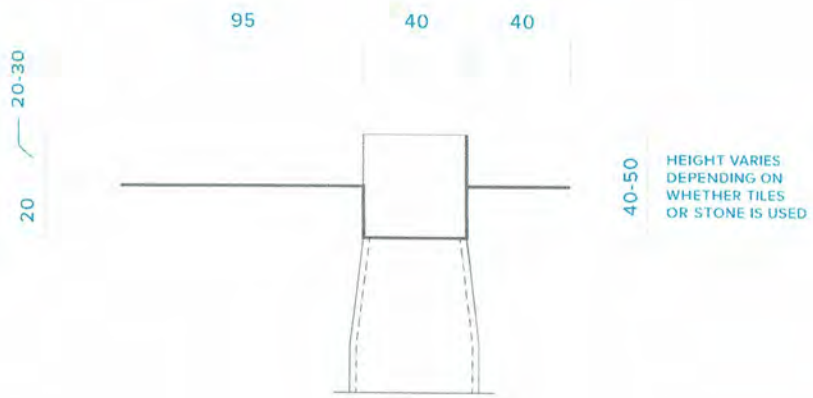

SECTION VIEW

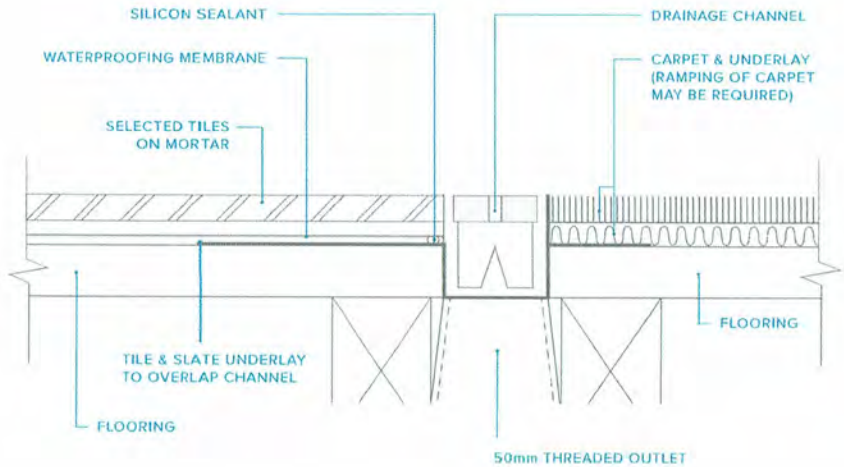

DETAIL VIEW

© JESANI LIMITED APRIL 2015
ALL MEASUREMENTS IN MILLIMETRES

KDC - Approved Building Consent Document - BC170701 - Pg 88 of 91 - 11/01/2018 - kjn

JESANI® STAINLESS STEEL DOOR CHANNEL FOR VINYL FLOOR

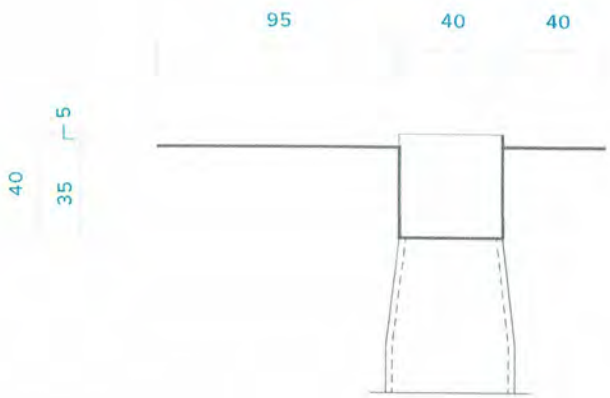

SECTION VIEW

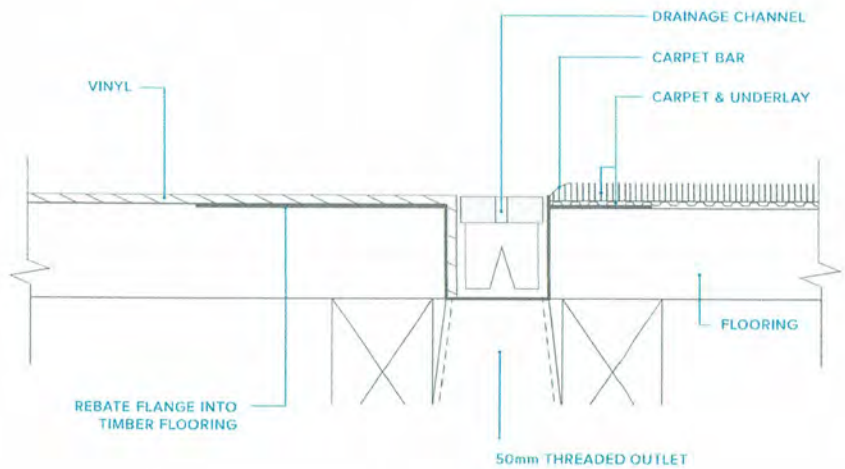

DETAIL VIEW

© JESANI LIMITED APRIL 2015
ALL MEASUREMENTS IN MILLIMETRES

JESANI®
WETROOM DESIGN SOLUTIONS

KDC - Approved Building Consent Document - BC170701 - Pg 89 of 91 - 11/01/2018 - kjn

JESANI® Door Channel installation

New Bathroom
Timber Flooring

Note: Please check the facts sheet before the purchasing and installation processes.

Note: Ensure interior door position is correct before channel installation.

1. Measure the trough of the channel and cut the timber flooring to allow the trough to hang in the slot and the flanges to sit flush on top of the floor.

2. Fix the flanges of the channel to the timber flooring using the predrilled holes, ensuring the wider flange sits on the bathroom side of the door. **For a vinyl floor covering**, you may need to rebate the flange into the timber floor.

For Tile Floor Coverings:

3. Line the bathroom floor with tile and slate underlay, ensuring the underlay covers a minimum of 20mm over the flange. It is optional to take the underlay to sit flush over the full flange, but not inside the trough. Silicone underneath the tile and slate underlay.

4. Waterproof the floor (bathroom side) to cover the full flange of the Channel. **Note:** It is optional to waterproof into the trough, however ensure the waste is not covered.

5. Tile over the waterproofing to cover the full flange utilising a tile edge for a nice clean finish.

6. To complete carpet flooring, fix carpet smooth edge against the 20mm upstand and install carpet

7. Install grill/grate into channel

For Vinyl Floor Coverings:

3. Lay the vinyl floor covering as per normal flooring specification

4. To complete carpet flooring, fix carpet bar against the 5mm upstand and install carpet

5. Install grill/grate into channel

© Jesani Ltd 2016

JESANI®
WETROOM DESIGN SOLUTIONS

KDC - Approved Building Consent Document - BC170701 - Pg 90 of 91 - 11/01/2018 - kjn

JESANI® Door Channel Installation

Renovation Bathroom
Timber Flooring - for Tile Finish

Note: Please check the facts sheet before the purchasing and installation processes.

1. Pull back the carpet and remove the smooth edge to create a working area.
2. Measure the trough of the channel and cut the timber flooring and tiles accordingly.
3. Chase a slot under the tile and slate underlay for the wider channel flange to insert into, ensuring not to damage the waterproofing and underfloor heating.
4. Glue and insert the wider channel flange into the slot and include tile edge against tiles.
5. Screw and fix the narrow side flange utilising the predrilled holes to the timber flooring.
6. Glue the carpet smooth edge on the dry side of the door channel flange against the upstand. Fix carpet accordingly. **Note:** Ramping of the carpet may be required.
7. Install grill/grate

© Jesani Ltd 2016

JESANI®
WETROOM DESIGN SOLUTIONS

KDC - Approved Building Consent Document - BC170701 - Pg 91 of 91 - 11/01/2018 - kjn

NOTE: IMPORTANT FACTS FOR YOUR JESANI® CHANNEL

1. ***Measure for the required length for Jesani® Shower, Door or Appliance Channel***

   Jesani® Channels have standard stock sizes available, however Custom Made Channels can be manufactured to suit your requirements.

2. ***Check the joist positions of the timber flooring for channel waste clearance.***

   If you find the joist position does not suit the outlet of the channel, we can custom make a channel to suit your requirements.

3. ***Calculations of the tile thickness needs to be taken into consideration for the grill/grate specifications.***

   The tile thickness can vary the height finish and length of the grill/grate for your Shower Channel.

4. ***Calculations of the tile thickness need to be taken into consideration for the Door Channel finish.***

   You want the height of the tile finish (including the tile edge) to equal the height of the opposite. The grill/grate will also sit flush with these two flooring finishes.

5. ***Depending on the location/base flooring of the bathroom, kitchen and laundry on the property will depend on your waterproofing requirements.***

   Check with your wetroom flooring contractor to confirm your waterproofing requirements.

   Note: All our installation guides include waterproofing steps

6. ***The Appliance Channel is an optional outlet rather than utilising a Door Channel for the kitchen/laundry areas.***

   If you were finding the appliance location a little bit tricky, then utilising the Door Channel into the areas holding the appliances is your safest option.

7. ***For concrete/concrete suspended floors - Careful planning required.***

   The location of the sanitary plumbing in a concrete substrate requires thorough planning to ensure the best outcome.

8. ***Check with your plumber for all sanitary plumbing requirements.***

   The location of the sanitary plumbing requires planning to ensure the best outcome.

© Jesani Ltd 2016

28 June 2018

Ereni Clark
866 Omamari Road
Omamari 0373

Dear Sir or Madam,

Reference Number: BC170701
Project Location: 866 Omamari Road , Omamari
Legal description of land where building is located: LOT 1 DP 206909
Project Description: Bathroom Renovation, Heat pump installation
IR Number: 1

Inspection Results:

FRAMING / PRE-WRAP - 28 Jun 2018 @ 10:00 by Greg Bellam

Inspection Outcome: **PASS** - The BCA is satisfied, on reasonable grounds, that the aspects of building work pertaining to this inspection demonstrate compliance with the building consent.

Inspection Summary: Plumbing and building completed. Existing exterior, interior and roof framing. Small wall added for cavity slider. Plumbing completed ', wastes underslung, PS3 required for supply. Plumber Ethan Summer #27839. Insulation going in at time of inspection. Okay to line.

Your next inspection will be: **Final**

Please contact us 48 hours before you require this to book your inspection.

History

Inspection Name	Summary
Framing / Pre-wrap	**PASS** - 28 Jun 2018
Final	-

Yours Sincerely,

Greg Bellam
Senior Building Control Officer

On behalf of: Kaipara District Council

05 September 2018

Ereni Clark
866 Omamari Road
Omamari 0373

Dear Sir or Madam,

Reference Number: BC170701
Project Location: 866 Omamari Road , Omamari
Legal description of land where building is located: LOT 1 DP 206909
Project Description: Bathroom Renovation, Heat pump installation
IR Number: 2

Inspection Results:

FINAL - 04 Sep 2018 @ 15:00 by Gavin Spaabaek

Inspection Outcome: **FAIL**- The following aspects of this inspection have resulted in a Fail result -- see the item(s) below:

Section 84 - 89 - Restricted Building Work:
Please obtain a record of work on the prescribed form from each licensed building practitioner that has carried out or supervised restricted work under this building consent and forward this to Building Consent Authority.

Section 92 - Application for a Code Compliance Certificate:
Please submit an application for Code Compliance Certificate.

Section 112 (1) - Alterations to Buildings:
Section 112 (1) - Finished construction does not demonstrate compliance with the building consent. Please contact the BCA to request another inspection when the work has been rectified.

Compliance:
See inspection records below.

SH - Fire Safety System [Para 2.2]:
Consent documents require the installation of a complying Type 1 smoke detection system with detectors installed as shown on the consent documentation. Please comply with this requirement and advise the BCA when the smoke alarm system is correctly installed and ready for re-inspection.

G4 - Windows:
1. Safety glass is not located in accordance with building consent. Please rectify so that building work conforms with the building consent and advise when work is ready for re-inspection.

Specific reinspection of these matters is required before building work may proceed.

Formal Directive: Please installed safety glass in the two windows to comply with Section 112A of the NZ Building Act 2004. The bathroom does not comply as reasonably practicable for disabled people. Install smoke detector with three metres of bedroom doors. Provide an application for code compliance certificate, Record of building works for carpentry, plumbers producer statement, electrical certificate and a producer statement for installation of the tarkett.

Inspection Summary: Installation of an accessable shower with seat and handrail. All dimensions are compliant. Above are issues to resolve.

Your next inspection will be: **Final**

Please contact us 48 hours before you require this to book your inspection.

History

Inspection Name	Summary
Framing / Pre-wrap	**PASS** - 28 Jun 2018
Final	**IN-PROGRESS** - 04 Sep 2018

Yours Sincerely,

Gavin Spaabaek
Senior Building Control Officer
On behalf of: Kaipara District Council

17 October 2018

Ereni Clark
866 Omamari Road
Omamari 0373

Dear Sir or Madam,

Reference Number: BC170701
Project Location: 866 Omamari Road , Omamari
Legal description of land where building is located: LOT 1 DP 206909
Project Description: Bathroom Renovation, Heat pump installation
IR Number: 3

Inspection Results:
FINAL - 17 Oct 2018 @ 12:00 by Matthew Williams

Inspection Outcome: PASS - The BCA is satisfied, on reasonable grounds, that the aspects of building work pertaining to this inspection demonstrate compliance with the building consent.

Site Communication: Re inspection. Items checked from Gavin's inspection report. The safety glass and type one smoke alarm has now been installed. The paperwork has been received.

Inspection Summary: Pass

Your next inspection will be: **No further inspection required**

History

Inspection Name	Summary
Framing / Pre-wrap	**PASS** - 28 Jun 2018
Final	**PASS** - 17 Oct 2018

Yours Sincerely,

Matthew Williams

www.kaipara.govt.nz
Unit 6 - The Hub, 6 Molesworth Drive, Mangawhai 0505
Tel.: (09) 439 3123 Fax: (09) 431 3161 Email: buildingsupport@kaipara.govt.nz

BCO

On behalf of: Kaipara District Council

KAIPARA DISTRICT

Kaipara te Oranganui • Two Oceans Two Harbours

KAIPARA DISTRICT COUNCIL

Application for Code Compliance Certificate (Form 6) Section 92, Building Act 2004

For Official use
Date Received:

Items marked * are mandatory. **Complete this form in BLOCK CAPITALS using BLACK or BLUE ink.**

1. The Building Consent

Building Consent Number*: 170701

Site Address*: 866 OMAMARI ROAD, RD3 DARGAVILLE 0

2. The Project

Description of the building work*: ALTERATIONS TO EXISTING BATHROOM

Floor Area*: 3.16 m²

Has the intended use of the building changed since the Building Consent was issued/granted? * ☐ YES ☑ NO

Provide details of the new use: [*refer NZBC A1 Classified Uses*]

3. The Owner [*include preferred form of address, eg, Mr, Miss, Dr, if an individual*]

Owner's Name*: ROBERT AND ERENI CLARK

Contact Person (*if owner is a company*):

Mailing/ Billing Address*: 866 OMAMARI ROAD RD 3 DARGAVILLE 0373

Street Address/ Registered Office:

Phone Number: 09 439 6433

Cell Phone:

Fax:

E-mail address:

Website:

4. The Agent (Note - Only required if application is being made on behalf of the owner. The Agent, if nominated, will be the first point of contact for communications with the Council/Building Consent Authority regarding this application/building work and will receive all correspondence including all invoices)

Agent's Name:

Contact Person (*if agent is a company*):

Mailing/ Billing Address:

Street Address/ Registered Office:

Phone Number:

Cell Phone:

Fax:

E-mail address:

Website:

5a. The Application

All building work to be carried out under the above building consent was completed on*:

KAIPARA DISTRICT

5b. The Application (Restricted Building Work) *

The licenced building practitioner(s) who carried out, or supervised, the restricted building work is/are as follows:

Note: Enter the licenced building practitioner (LBP) number or registration number if treated as being licenced under section 291 of Building Act 2004.

Name	Licence Class	LBP number	Particular work carried out or supervised:
M. KING	CARPENTRY	101566	ALTERATIONS TO EXISTING BATHROOM
M. FROGGATT	ELECTRICIAN	E 277415	ELECTRICAL FIXTURES
E. SUMNER	PLUMBER	27893	PLUMBING FIXTURES + PIPEWORK
B. JESSOP			INSTALLATION OF Vinyl Flooring + Wall Linings

From 6-CCC Application
Version 1
Issued: 01 March 2014

KAIPARA DISTRICT

5c. The Application (Key Personnel) *

The personnel who carried out the building work other than restricted building work are as follows:

Builder:	KING BROS CONSTRUCTION LTD	Registration Number:	101566
Mailing Address:	P.O. BOX 64 DARGAVILLE 0340		
e-mail:		Phone (day):	09 439 5989
Certifying Plumber:	PLUMBING + HEATING LTD	Registration Number:	27893
Mailing Address:	P.O. BOX 377 DARGAVILLE		
e-mail:		Phone (day):	09 439 6123
Certifying Gasfitter:		Registration Number:	
Mailing Address:			
e-mail:		Phone (day):	
Certifying Drainlayer:	PLUMBING + HEATING	Registration Number:	27893
Mailing Address:			
e-mail:		Phone (day):	09 439 6123
Registered Electrician:	LASER ELECTRICAL	Registration Number:	67546
Mailing Address:	52 NORMANBY ST DARGAVILLE		
e-mail:		Phone (day):	09 439 7172
Name:		Registration Number:	
Mailing Address:			
e-mail:		Phone (day):	
Name:		Registration Number:	
Mailing Address:			
e-mail:		Phone (day):	

Note: Use additional sheets if required.

Other notes or comments which you as the applicant may wish to add:

KAIPARA DISTRICT

5d. The Application (Specified Systems)
Are there any specified systems associated with this project? *

YES NO, there are no specified systems associated with this project.

The following specified systems are contained on the compliance schedule for the building and, in the opinion of the personnel who installed them, are capable of performing to the performance standards set out in the building consent: [*specified systems are defined in regulations*].

SS1 Automatic systems for fire suppression (for example, sprinkler systems)

SS2 Automatic or manual emergency warning systems for fire or other dangers (other than a warning system for fire that is entirely within a household unit & serves only that unit).

SS3 Electromagnetic or automatic doors or windows(for example, ones that close on fire alarm activation)

- **SS3/1** Automatic doors
- **SS3/2** Access Controlled Doors
- **SS3/3** Interfaced fire or smoke doors or windows

SS4 Emergency lighting systems

SS5 Escape route pressurisation systems

SS6 Riser mains for fire service use

SS7 Automatic back-flow preventers connected to a potable water supply

SS8 Lifts, escalators, travelators, or other systems for moving people or goods within buildings

- **SS8/1** Passenger Carrying lifts
- **SS8/2** Service Lifts
- **SS8/3** Escalators and moving walks

SS9 Mechanical ventilation or air conditioning systems

SS10 Building maintenance units for providing access to the exterior and interior walls of buildings

SS11 Laboratory fume cupboards

SS12 Audio loops or other assistive listening systems

SS13 Smoke control systems

- **SS13/1** Mechanical Smoke Control
- **SS13/2** Natural Smoke Control
- **SS13/3** Smoke Curtains

SS14 Emergency power systems for, or signs relating to, a system or feature specified in any of the clauses 1 to 13

- **SS14/1** Emergency Power Systems
- **SS14/2** Signs relating to Specified Systems 1 to 13

SS15 Other Fire Safety Systems or Features

- **SS15/1** Systems for communicating spoken information intended to facilitate evacuation
- **SS15/2** Final exit (as defined by A2 of the Building Code; and
- **SS15/3** Fire separations
- **SS15/4** Signs for communicating information intended to facilitate evacuation;
- **SS15/5** Smoke separations

SS16 Cable Cars

Risk Group*:		**Fire Hazard Category*:**		**Max Occupant Load*:**	

KAIPARA DISTRICT

5e. The Application (Signatory)

I request that you issue a code compliance certificate for this work under section 95 of the Building Act 2004.

Signed by*: [signature]

FULL NAME*: M. J. KING

Date*: 27 · 8 · 18

I am the*: ☐ **Owner** ☐ **Agent** on behalf of, and with the authority of, the owner.

Address the code compliance certificate should be sent to: 866 OMAMARI RD DARGAVILLE

6. Attachments

The following documents are attached to this application:

Evidence of ownership* (*Certificate of Title or Sale & Purchase Agreement*)

Certificates that relate to the energy work (*eg Gas & electricity*)

Evidence that the specified systems are capable of performing to the performance standards set out in the building consent

Proof of potability of drinking water from private well, and/or rainwater catchment, supply (refer to New Zealand Drinking Water Standards 2005)

Memoranda (Records of Building Work) from licenced building practitioner(s) stating what restricted building work they carried out or supervised*

Other documents from personnel who carried out the work

For Official use only:

Form 7
Code compliance certificate

Section 95, Building Act 2004

The building

Street address of building:	866 Omamari Road , Omamari
Legal description of land where building is located:	LOT 1 DP 206909
Building name:	N/A
Location of building within site/block number:	866 Omamari Road Omamari
Level/unit number:	N/A
Current, lawfully established, use:	SH (Sleeping Single Home)
Year first constructed:	1969

The owner

Name of owner:	Ereni Clark
Contact person:	Ereni Clark
Mailing address:	866 Omamari Road , Omamari
Street address/registered office:	866 Omamari Road , Omamari
Phone number:	Landline: 094396433 Mobile: N/A
Daytime:	Landline: 094396433 Mobile: N/A
After hours:	Landline: 094396433 Mobile: N/A
Facsimile number:	N/A
Email address:	N/A

First point of contact for communications with the council/building consent authority:
Angela Russell (Design Draughtins Solutions Ltd); Mailing Address: 10 Eden Tce
Kamo
Whangarei 0112; Phone: 02108442666; Email: info@designhomes.co.nz

Building work

Building consent number:	BC170701
Description:	Bathroom Renovation, Heat pump installation
Issued by:	Kaipara District Council

Code compliance

The building consent authority named below is satisfied, on reasonable grounds, that -

- the building work complies with the building consent.

Signature:

Matthew Williams
Position: BCO
On behalf of: Kaipara District Council
Date: 17 October 2018

Email #20666: BC170701

Project ID: 170701
Date Received: 2018-01-11 09:25:02
Sender: info@designhomes.co.nz
Checked By: Sharon Martin
Accepted By: Jamie Nikora
Subject:
Information Received Via Email: RE: BC170701.1 Form 5: Building Consent - 866 Omamari Road Omamari
Message:
Hi Jamie

Thankyou very much for the notice that our building consent has been issued.

I have received the hardcopy in the post, and found that there is a n error in the documents, as the Specifications + supporting documents, along with The designers CoW Cert is the paperwork for a different project, which was uploaded in error by my admin staff.

I apologise for this error - and have attached the correct documents that should have been stamped along with this consent application.

Is it possible to have the attached documents stamped and attached to the consented doc's on the online portal?

Kind Regards

Angela Russell
Design Draughting Solutions Ltd
Ph: 09 435 3390
Mobile: 021 757 174
email: info@designhomes.co.nz

-----Original Message-----
From: Kaipara District Council [mailto:170701@kdc.abcs.co.nz]
Sent: Friday, 15 December 2017 10:43 a.m.
To: Design Draughting Solutions Ltd <info@designhomes.co.nz>
Subject: BC170701.1 Form 5: Building Consent - 866 Omamari Road Omamari

Good Morning,

Please see your attached Issued Building Consent.

Our staff will be in touch to confirm the first point of contact to establish delivery details of the hard copy.

Upon contact, please advise us whether you would prefer postal/pick-up by the owner/agent of the property concerned.

For any further information send your enquiry to 170701@kdc.abcs.co.nz

We look forward to speaking with you soon.

Kind Regards,

Jamie Nikora
Building Control Officer
Kaipara District Council
Kaipara District Council, Unit 6 - The Hub, 6 Molesworth Drive, Mangawhai 0505
P: (09) 439 3123 | E: buildingsupport@kaipara.govt.nz | W: www.kaipara.govt.nz

ATTACHMENTS:

- 22576_1354730811898127741_B448_SPECIFICATION_Book.pdf

Email #26196: BC170701

Project ID: 170701
Date Received: 2018-09-05 11:21:57
Sender: admin@kingbrothers.co.nz
Checked By: Sharon Martin
Accepted By: Sharon Martin
Subject:
Information Received Via Email: RE: BC170701: 866 Omamari Road Omamari
Message:
Thanks Sharon

Please keep contact email as detailed - details must have been on permit pack when issued by Accessible.

Regards

Paula Norman/Office Administration

King Bros Construction Ltd, 7-9 Liverpool Street, Dargaville 0310

P 09 439 5989

E admin@kingbrothers.co.nz

From: Kaipara District Council <170701@kdc.abcs.co.nz>
Sent: 5 September 2018 10:53 a.m.
To: admin@kingbrothers.co.nz
Subject: BC170701: 866 Omamari Road Omamari

Good morning, As per your request., the latest Inspection report.

Gavin had issued this inspection report this morning but I can see it has gone to info@designhomes.co.nz <mailto:info@designhomes.co.nz> .

Would you like the contact email changed?

warmest regards

Sharon Martin

Kaipara District Council

Unit 6 - The Hub, 6 Molesworth Drive, Mangawhai 0505
P: (09) 439 3123 | E: buildingsupport@kaipara.govt.nz
<mailto:buildingsupport@kaipara.govt.nz> | W: www.kaipara.govt.nz
<http://www.kaipara.govt.nz>

Our inspection team have carried out a site inspection on the above project today, please find attached the inspectors site notice for your information.

If you have any queries regarding the content of the site notice please contact the inspector on phone 0800 727 059.

_____

ATTACHMENTS:

* BC170701_Inspection_Report.pdf
<https://kdc.abcs.co.nz/a2/public/download/026a6de6-c54e-3f17-aca2-84d400303c72>

_____

DISCLAIMER
This message is for the designated recipient(s) only, and may contain confidential and/or privileged information. If you have received it in error, please delete it and advise the sender immediately. You should not copy or use it for any other purpose, nor disclose its contents to any other person.

Designated Recipient(s): admin@kingbrothers.co.nz
<mailto:admin@kingbrothers.co.nz>
Sent From: AlphaOne Building Consent System
Sent Date: 5 September 2018 10:53:08 am - Wednesday

Email #26240: BC170701

Project ID: 170701
Date Received: 2018-09-06 12:31:56
Sender: admin@kingbrothers.co.nz
Checked By: Gavin Spaabaek
Accepted By: Gavin Spaabaek
Subject:
Information Received Via Email: Documentation Copies
Message:
Good afternoon

Please see attached documentation for 866 Omamari Road, Dargaville.

Regards

Paula Norman/Office Administration

King Bros Construction Ltd, 7-9 Liverpool Street, Dargaville 0310

P 09 439 5989

E admin@kingbrothers.co.nz

ATTACHMENTS:

- CCC.pdf
- ROW.pdf
- Plumbing Producer Statement - Robert Ereni Clark.pdf
- Electrical.jpg
- Vinyl PS3.pdf

Email #58905: BC170701

Project ID: 170701
Date Sent: 2017-11-14 08:25:45
Recipient: info@designhomes.co.nz
Sender: Lissa Whiteman
Subject:
BC170701.1 Request For Further Information - Vetting - 866 Omamari Road Omamari
Message:
Good Morning,

Reference Number: 170701
Project Location: 866 Omamari Road , Omamari
Project Description: Bathroom Renovation, Heat pump installation

Thank you for lodging your building consent application with the Kaipara District Council, the application has been reviewed for completeness in accordance with s45 of the Act. The attached letter details information which is required to be provided to enable your application to be formally receipted.

So that your information gets to us as promptly as possible, please:

- ensure you reply directly to this email;
- only provide information specifically relating to this project;
- all attachments must be saved in PDF format;

By doing this you will keep your project moving as the information will be delivered directly to the processor. To speed up processing we would request that changes to plans are marked using the "cloud" convention - thank you for helping us to help you!

If you do not receive the automated reply confirmation from Kaipara District Council for the info sent then Kaipara District Council has not received your information.

Lissa Whiteman
Vetting
Kaipara District Council
Kaipara District Council, Unit 6 - The Hub, 6 Molesworth Drive, Mangawhai 0505
P: (09) 439 3123 | E: buildingsupport@kaipara.govt.nz | W: www.kaipara.govt.nz

Email #59883: BC170701

Project ID: 170701
Date Sent: 2017-11-27 11:50:56
Recipient: jnikora@kaipara.govt.nz
Sender: Derek Free
Subject: BC170701: A new job for you
Message:

Hello Jamie Nikora,

BC170701 has been allocated to you. Please check and take appropriate action.

//kdc.abcs.co.nz/jobs/170701

— AlphaOne System

Email #60009: BC170701

Project ID: 170701
Date Sent: 2017-11-28 10:53:44
Recipient: info@designhomes.co.nz
Sender: Sharon Martin
Subject: BC170701.1 PIM - 866 Omamari Road Omamari
Message:

Good morning,

Reference Number: 170701.1

PIM

Attached is a copy of the issued Project Information Memorandum (PIM)

This is not approval to build.

If you have any questions regarding the attached documents please contact the Planning Team at rmaconsents@kaipara.govt.nz

regards
Sharon Martin

Kaipara District Council
Kaipara District Council, Unit 6 - The Hub, 6 Molesworth Drive, Mangawhai 0505
P: (09) 439 3123 | E: buildingsupport@kaipara.govt.nz | W: www.kaipara.govt.nz

Email #61381: BC170701

Project ID: 170701
Date Sent: 2017-12-15 10:43:00
Recipient: info@designhomes.co.nz
Sender: Jamie Nikora
Subject:
BC170701.1 Form 5: Building Consent - 866 Omamari Road Omamari
Message:
Good Morning,

Please see your attached Issued Building Consent.

Our staff will be in touch to confirm the first point of contact to establish delivery details of the hard copy.

Upon contact, please advise us whether you would prefer postal/pick-up by the owner/agent of the property concerned.

For any further information send your enquiry to 170701@kdc.abcs.co.nz

We look forward to speaking with you soon.

Kind Regards,

Jamie Nikora
Building Control Officer
Kaipara District Council
Kaipara District Council, Unit 6 - The Hub, 6 Molesworth Drive, Mangawhai 0505
P: (09) 439 3123 | E: buildingsupport@kaipara.govt.nz | W: www.kaipara.govt.nz

Email #62283: BC170701

Project ID: 170701
Date Sent: 2018-01-11 09:25:03
Recipient: info@designhomes.co.nz
Sender: AlphaOne System
Subject:
RE: RE: BC170701.1 Form 5: Building Consent - 866 Omamari Road Omamari
Message:
Hello

Thank you for your message regarding your Building Consent application with Kaipara District Council. This is an automated response to confirm your message has been received by the assigned officer for review. You can expect a response within 5 working days.

Below is a list of the accepted and rejected attachments. Please note that we can only accept email attachments in PDF format.

ACCEPTED ATTACHMENTS:
- 22576_1354730811898127741_B448_SPECIFICATION_Book.pdf (2.75MB)

For further information or enquiries please email 170701@kdc.abcs.co.nz.

Kind regards

Kaipara District Council
Unit 6 - The Hub
6 Molesworth Drive
Mangawhai 0505
www.kaipara.govt.nz

Email #62284: BC170701

Project ID: 170701
Date Sent: 2018-01-11 09:27:14
Recipient: jnikora@kaipara.govt.nz
Sender: Steven Spence
Subject: BC170701: A new email has been allocated to you
Message:

Hello Jamie Nikora,

A new email for BC170701 has been allocated to you. Please check and take appropriate action.

//kdc.abcs.co.nz/jobs/170701/communication/?optilbox

— AlphaOne System

Email #62285: BC170701

Project ID: 170701
Date Sent: 2018-01-11 09:39:59
Recipient: info@designhomes.co.nz
Sender: Jamie Nikora
Subject: BC170701: 866 Omamari Road Omamari
Message:

Good Morning Angela,

Wow I should of picked that up as I done both the jobs, one after the other and when I seen it was a very similar design I steamed on through and processed it in line with the other.

Old docs superseded new docs issued and attached and will print hard copy.

Kind Regards,

Jamie Nikora
Building Control Officer
Kaipara District Council
Unit 6 - The Hub, 6 Molesworth Drive, Mangawhai 0505
P: (09) 439 3123 | E: buildingsupport@kaipara.govt.nz | W: www.kaipara.govt.nz

==========

Hi Jamie

Thankyou very much for the notice that our building consent has been issued.

I have received the hardcopy in the post, and found that there is a n error in the documents, as the Specifications + supporting documents, along with The designers CoW Cert is the paperwork for a different project, which was uploaded in error by my admin staff.

I apologise for this error - and have attached the correct documents that should have been stamped along with this consent application.

Is it possible to have the attached documents stamped and attached to the consented doc's on the online portal?

Kind Regards
A

Angela Russell
Design Draughting Solutions Ltd
Ph: 09 435 3390
Mobile: 021 757 174
email: info@designhomes.co.nz

-----Original Message-----
From: Kaipara District Council [mailto:170701@kdc.abcs.co.nz]
Sent: Friday, 15 December 2017 10:43 a.m.
To: Design Draughting Solutions Ltd
Subject: BC170701.1 Form 5: Building Consent - 866 Omamari Road Omamari

Good Morning,

Please see your attached Issued Building Consent.

Our staff will be in touch to confirm the first point of contact to establish delivery details of the hard copy.

Upon contact, please advise us whether you would prefer postal/pick-up by the owner/agent of the property concerned.

For any further information send your enquiry to 170701@kdc.abcs.co.nz

We look forward to speaking with you soon.

Kind Regards,

Jamie Nikora
Building Control Officer
Kaipara District Council
Kaipara District Council, Unit 6 - The Hub, 6 Molesworth Drive, Mangawhai 0505
P: (09) 439 3123 | E: buildingsupport@kaipara.govt.nz | W: www.kaipara.govt.nz

Email #74981: BC170701

Project ID: 170701
Date Sent: 2018-06-28 16:04:19
Recipient: info@designhomes.co.nz, info@designhomes.co.nz
Sender: Greg Bellam
Subject: BC170701 Inspection Report
Message:

Our inspection team have carried out a site inspection on the above project today, please find attached the inspectors site notice for your information.

If you have any queries regarding the content of the site notice please contact the inspector on phone 0800 727 059.

Email #80732: BC170701

Project ID: 170701
Date Sent: 2018-09-05 08:09:27
Recipient: info@designhomes.co.nz, info@designhomes.co.nz
Sender: Gavin Spaabaek
Subject: BC170701 Inspection Report
Message:

Our inspection team have carried out a site inspection on the above project today, please find attached the inspectors site notice for your information.

If you have any queries regarding the content of the site notice please contact the inspector on phone 0800 727 059.

Email #80766: BC170701

Project ID: 170701
Date Sent: 2018-09-05 10:53:10
Recipient: admin@kingbrothers.co.nz
Sender: Sharon Martin
Subject: BC170701: 866 Omamari Road Omamari
Message:

Good morning, As per your request., the latest Inspection report.

Gavin had issued this inspection report this morning but I can see it has gone to info@designhomes.co.nz.

Would you like the contact email changed?

warmest regards

Sharon Martin

Kaipara District Council
Unit 6 - The Hub, 6 Molesworth Drive, Mangawhai 0505
P: (09) 439 3123 | E: buildingsupport@kaipara.govt.nz | W: www.kaipara.govt.nz

Our inspection team have carried out a site inspection on the above project today, please find attached the inspectors site notice for your information.

If you have any queries regarding the content of the site notice please contact the inspector on phone 0800 727 059.

Email #80768: BC170701

Project ID: 170701
Date Sent: 2018-09-05 11:00:06
Recipient: admin@kingbrothers.co.nz
Sender: Sharon Martin
Subject: BC170701: 866 Omamari Road Omamari
Message:

Hi, I have just included you as another contact for any future correspondence.

warmest regards
Sharon Martin

Kaipara District Council
Unit 6 - The Hub, 6 Molesworth Drive, Mangawhai 0505
P: (09) 439 3123 | E: buildingsupport@kaipara.govt.nz | W: www.kaipara.govt.nz

Good morning, As per your request., the latest Inspection report.

Gavin had issued this inspection report this morning but I can see it has gone to info@designhomes.co.nz.

Would you like the contact email changed?

warmest regards

Sharon Martin

Kaipara District Council
Unit 6 - The Hub, 6 Molesworth Drive, Mangawhai 0505
P: (09) 439 3123 | E: buildingsupport@kaipara.govt.nz | W: www.kaipara.govt.nz

Our inspection team have carried out a site inspection on the above project today, please find attached the inspectors site notice for your information.

If you have any queries regarding the content of the site notice please contact the inspector on phone 0800 727 059.

Email #80781: BC170701

Project ID: 170701
Date Sent: 2018-09-05 11:21:58
Recipient: admin@kingbrothers.co.nz
Sender: AlphaOne System
Subject: RE: RE: BC170701: 866 Omamari Road Omamari
Message:

Hello

Thank you for your message regarding your Building Consent application with Kaipara District Council. This is an automated response to confirm your message has been received by the assigned officer for review. You can expect a response within 5 working days.

Below is a list of the accepted and rejected attachments. We accept email attachments in PDF, JPG and PNG format.

For further information or enquiries please email 170701@kdc.abcs.co.nz.

Kind regards

Kaipara District Council
Unit 6 - The Hub
6 Molesworth Drive
Mangawhai 0505
www.kaipara.govt.nz

Email #80791: BC170701

Project ID: 170701
Date Sent: 2018-09-05 11:30:14
Recipient: smartin@kaipara.govt.nz
Sender: Gavin Spaabaek
Subject: BC170701: A new email has been allocated to you
Message:

Hello Sharon Martin,

A new email for BC170701 has been allocated to you. Please check and take appropriate action.

//kdc.abcs.co.nz/jobs/170701/communication/?optilbox

— AlphaOne System

Email #80932: BC170701

Project ID: 170701
Date Sent: 2018-09-06 12:31:57
Recipient: admin@kingbrothers.co.nz
Sender: AlphaOne System
Subject: RE: Documentation Copies
Message:

Hello

Thank you for your message regarding your Building Consent application with Kaipara District Council. This is an automated response to confirm your message has been received by the assigned officer for review. You can expect a response within 5 working days.

Below is a list of the accepted and rejected attachments. We accept email attachments in PDF, JPG and PNG format.

ACCEPTED ATTACHMENTS:
- CCC.pdf (517.29kB)
- ROW.pdf (460.65kB)
- Plumbing Producer Statement - Robert Ereni Clark.pdf (316.14kB)
- Electrical.jpg (2.77MB)
- Vinyl PS3.pdf (825.94kB)

For further information or enquiries please email 170701@kdc.abcs.co.nz.

Kind regards

Kaipara District Council
Unit 6 - The Hub
6 Molesworth Drive
Mangawhai 0505
www.kaipara.govt.nz

Email #84582: BC170701

Project ID: 170701
Date Sent: 2018-10-17 12:13:04
Recipient: admin@kingbrothers.co.nz
Sender: Matthew Williams
Subject: BC170701 Inspection Report
Message:

Our inspection team have carried out a site inspection on the above project today, please find attached the inspectors site notice for your information.

If you have any queries regarding the content of the site notice please contact the inspector on phone 0800 727 059.

Email #84583: BC170701

Project ID: 170701

Date Sent: 2018-10-17 12:21:47

Recipient: info@designhomes.co.nz, admin@kingbrothers.co.nz

Sender: Matthew Williams

Subject:

170701.1 Form 7: Code Compliance Certificate - 866 Omamari Road Omamari

Message:

Dear Sir/Madam,

Reference Number: 170701.1

Form 7: Code Compliance Certificate

Matthew Williams
BCO
Kaipara District Council
Unit 6 - The Hub, 6 Molesworth Drive, Mangawhai 0505
P: (09) 439 3123 | E: buildingsupport@kaipara.govt.nz | W: www.kaipara.govt.nz