Bcon22/0752 - WDC Approved Plans - 17/01/2023

WHANGANUI
DISTRICT COUNCIL
Te Kaunihera a Rohe o Whanganui

IMPORTANT NOTE

These documents are required to be onsite for all inspections and must be a complete and full copy of the WDC stamped “Approved” documents.

Failure to have a full and legible set of documents may result in a terminated inspection. A terminated inspection will incur additional charges.

Bcon22/0752 - WDC Approved Plans - 17/01/2023

101 Guyton Street
P O Box 637, Whanganui
Phone: (06) 349 0001
Fax: (06) 349 0000
Email: wdc@whanganui.govt.nz
Web: www.whanganui.govt.nz

WHANGANUI DISTRICT COUNCIL
Te Kaunihera a Rohe o Whanganui

INSPECTION RECORD

This record, together with the Building Consent and approved plans, is to remain on the construction site at all times.

Project Location	***TO BOOK AN INSPECTION PLEASE PHONE WDC BUILDING CONTROL ON 349 0001 AND QUOTE THE FOLLOWING APPLICATION NUMBER:***	***BCon22/0752***
9 Tui Pl WHANGANUI		
Description of Work	**Proposed House Alteration and Addition (Alter Dining, Kitchen, Laundry and Bathroom)**	

Applicant	Mr MR Lapuz 85 Springvale Road, Springvale, Whanganui 4501

SUMMARY OF CONDITIONS

Building Consent Number BCon22/0752

PIM Conditions

Code	***Condition***
	All work on the project must comply with the requirements of the NZ Building Code.
	A PIM only document is not an approval to build. A Building Consent is required before building work commences.
	W.D.C will follow up on building work not completed within two years of building consent issue.
	A Building Consent lapses and is of no effect if the building work has not been started within 12 months of the date of issue.
	If the building is public premises it may not be occupied until either a code compliance certificate or certificate for public use has been issued.
	Please note [Electrical, and Gasfitting subtrades do not form part of the building consent inspection process. However, Council is required to receive 'Energy Certificates' from both of these trades before issue of a Code Compliance Certificate].

Building Consent Information

Code	***Information***

Your project's inspections are listed on the next page...

Bcon22/0752 - WDC Approved Plans - 17/01/2023

101 Guyton Street
P O Box 637, Whanganui
Phone: (06) 349 0001
Fax: (06) 349 0000
Email: wdc@whanganui.govt.nz
Web: www.whanganui.govt.nz

WHANGANUI DISTRICT COUNCIL
Te Kaunihera a Rohe o Whanganui

Please Note: A minimum of 48 hours notice is required for the booking of an inspection. The inspection record sheet and accompanying building consent documentation must be on site for use by the inspector at the time of the inspection.

All inspections are to be carried out by BCA Building Inspectors unless prior arrangements have been made by the BCA to have an approved qualified person inspect specific items (eg. Engineer). Inspections shall be carried out in accordance with the attached schedule of inspection types. It is the owner's responsibility to ensure all necessary inspections are carried out as required. Please contact WDC if you are unsure what requires inspection – do not cover or enclose any building work without inspection.

Note: Further inspections may incur additional cost at time of Code Compliance Certificate issue.

Inspections Record For Building Consent Number BCon22/0752

Inspection	*When to Request*	*Date*	*Inspector*	*Complies with Code*	*Reinspect*	*Notes*		
PILE AND/OR POST INSPECTION	Prior to placing Concrete					pile and post inspection for deck veranda		
SUB FLOOR INSPECTION	Before floor is placed.					to check the subfloor framing to the porch enclosures and the deck		
FRAMING AND PRELINE INSPECTION	Before Internal linings are fixed.							
POST LINE INSPECTION	To inspect fixings. Prior to covering up.							
PLUMBING PRELINE INSPECTION	Before Internal linings are fixed.							
SANITARY DRAINS INSPECTION	Before backfilling drains							
FINAL BUILDING AND PLUMBING COMBINED INSPECTION	On Completion							

Bcon22/0752 - WDC Approved Plans - 17/01/2023

101 Guyton Street
P O Box 637, Whanganui
Phone: (06) 349 0001
Fax: (06) 349 0000
Email: wdc@whanganui.govt.nz
Web: www.whanganui.govt.nz

WHANGANUI DISTRICT COUNCIL
Te Kaunihera a Rohe o Whanganui

CONSTRUCTION REVIEWS (NO INSPECTION)	On Completion					Smoke alarms to be checked at time of final inspection. Please submit electronically after Final Inspection: The completed CCC application form All LBP memos for RBW. All energy certs. As Built Drainage if variation from plans.		

Bcon22/0752 - WDC Approved Plans - 17/01/2023

101 Guyton Street
P O Box 637, Whanganui
Phone: (06) 349 0001
Fax: (06) 349 0000
Email: wdc@whanganui.govt.nz
Web: www.whanganui.govt.nz

WHANGANUI DISTRICT COUNCIL
Te Kaunihera a Rohe o Whanganui

BUILDING CONSENT NUMBER BCon22/0752

Section 51, Building Act 2004

The building:

Street address of building:	***Legal description of land where building is located:***
9 Tui Pl WHANGANUI	Lot 2 DP 570055 0.0777 Ha
Building name:	***Location of building within site/block number:***
Proposed House Alteration	
Level/unit number:	
1.000000	

The owner:

Name of Owner:	
Mr NP Oli	
Mailing address:	***Street Address/registered Office:***
9 Tui Place Gonville Whanganui 4501	9 Tui Place Gonville Whanganui 4501

Phone numbers:

Landline:		***Mobile:***	
Daytime:		***After hours:***	
Facsimile number:			
Email address:		***Website:***	

First point of contact for communications with the building consent authority:

Contact Person:	
Mr MR Lapuz	
Mailing address:	***Street Address/registered Office:***
85 Springvale Road, Springvale, Whanganui 4501	85 Springvale Road, Springvale, Whanganui 4501

Phone number:

Landline:	063477447	***Mobile:***	02102398523
Daytime:		***After hours:***	
Facsimile number:			
Email address:		***Website:***	

Building Work

The following building work is authorised by this consent

Project
Proposed House Alteration and Addition (Alter Dining, Kitchen, Laundry and Bathroom)

Bcon22/0752 - WDC Approved Plans - 17/01/2023

101 Guyton Street
P O Box 637, Whanganui
Phone: (06) 349 0001
Fax: (06) 349 0000
Email: wdc@whanganui.govt.nz
Web: www.whanganui.govt.nz

WHANGANUI DISTRICT COUNCIL
Te Kaunihera a Rohe o Whanganui

Intended Use	***Intended Life***
Single Detached Residential	50+ Years
Estimated Value ($)	
$70000.00	

This building consent is issued under section 51 of the Building Act 2004. This building consent does not relieve the owner of the building (or proposed building) of any duty of responsibility under any other Act relating to or affecting the building (or proposed building). This building consent also does not permit the construction, alteration, demolition, or removal of the building (or proposed building) if that construction, alteration, demolition or removal would be in breach of any other Act.

Bcon22/0752 - WDC Approved Plans - 17/01/2023

101 Guyton Street
P O Box 637, Whanganui
Phone: (06) 349 0001
Fax: (06) 349 0000
Email: wdc@whanganui.govt.nz
Web: www.whanganui.govt.nz

WHANGANUI DISTRICT COUNCIL
Te Kaunihera a Rohe o Whanganui

CONDITIONS OF BUILDING CONSENT NUMBER BCon22/0752

Section 51, Building Act 2004

This Building Consent is issued Subject to the following conditions:

Building Act 2004, Section 90:

Inspections by Building Consent Authorities

Agents authorised by the building consent authority for the purposes of this section are entitled, at all times during normal working hours or while building work is being done, to inspect

(a) land on which building work is being or is proposed to be carried out; and

(b) building work that has been or is being carried out on or off the building site; and

(c) any building.

Compliance Schedule:

A compliance schedule (CS) is not required for this building.

‡Attachments

‡Copies of the following documents are attached to this building consent:
‡Project information memorandum number BCon22/0752
‡Inspection record
‡Informative notes

Signed for and on behalf of the Whanganui District Council

GJ Hoobin
Building Control Manager

Date: 16 January 2023

Bcon22/0752 - WDC Approved Plans - 17/01/2023

101 Guyton Street
P O Box 637, Whanganui
Phone: (06) 349 0001
Fax: (06) 349 0000
Email: wdc@whanganui.govt.nz
Web: www.whanganui.govt.nz

WHANGANUI DISTRICT COUNCIL
Te Kaunihera a Rohe o Whanganui

BUILDING CONSENT NUMBER BCon22/0752

Informative notes:

- The Building Consent, conditions, inspection sheet, and approved plans must be kept on site at all times until completion of the project.
- Failure to request inspections will risk the non-issuing of a code compliance certificate and the structure may be deemed non-complying.
- Any inspection time required over and above that allowed may incur a further charge.
- Under Section 52, a building consent lapses and is of no effect if the building work to which it relates is not commenced within 12 months after the date of issue.
- Under Section 93, if the owner has not made application within 24 months, the BCA (Building Control Authority), must decide whether or not to issue a CCC (Code Compliance Certificate).

Bcon22/0752 - WDC Approved Plans - 17/01/2023

11 January 2023

Wanganui District Council
101 Guyton Street, PO Box 637
Whanganui

Project consent number: BCon 22/0752

Project location: 9 Tui Place, Whanganui

Response to your RFI dated (10 Jan 2023)

1. Refer to attached revised drawing sheet 8 and sheet 16.
2. Refer to attached revised drawing sheet 7, sheet 13, sheet 14 and Hardie plank weatherboards Technical Specification.

RECEIVED 12/01/2023

Marcelo Lapuz

Bcon22/0752 - WDC Approved Plans - 17/01/2023

101 Guyton Street
P O Box 637, Whanganui
Phone: (06) 349 0001
Fax: (06) 349 0000
Email: wdc@whanganui.govt.nz
Web: www.whanganui.govt.nz

WHANGANUI DISTRICT COUNCIL
Te Kaunihera a Rohe o Whanganui

PROJECT INFORMATION MEMORANDUM NUMBER BCon22/0752

Section 35, Building Act 2004

Mr MR Lapuz
85 Springvale Road
Springvale
Whanganui 4501

Project Location	***Assessment Number/Legal Description***
9 Tui Pl WHANGANUI	Lot 2 DP 570055 0.0777 Ha
Category	***Description of Work***
General Building Consents	Proposed House Alteration and Addition (Alter Dining, Kitchen, Laundry and Bathroom)
Intended Life	***Estimated Value ($)***
50+ Years	70000.00

This Project Information Memorandum is confirmation that the proposed work may be undertaken, subject to the provisions of the Building Act 2004 and any requirements of the Building Consent (number BCon22/0752), which has been granted.

This Project Information Memorandum is subject to the following conditions:

- **All work on the project must comply with the requirements of the NZ Building Code.**

Signed for and on behalf of the Whanganui District Council

GJ Hoobin
Building Control Manager **Date**: 16 January 2023

Bcon22/0752 - WDC Approved Plans - 17/01/2023

RECORD OF TITLE
UNDER LAND TRANSFER ACT 2017
FREEHOLD

Search Copy

R.W. Muir
Registrar-General
of Land

Identifier	**1030931**
Land Registration District	**Wellington**
Date Issued	04 February 2022

Prior References
114390

Estate	Fee Simple
Area	777 square metres more or less
Legal Description	Lot 2 Deposited Plan 570055
Registered Owners	

Noel Pabilonia Oli

Interests

Subject to Part IV A Conservation Act 1987

Subject to Section 11 Crown Minerals Act 1991

11333534.3 Mortgage to The Co-operative Bank Limited - 4.2.2019 at 5:10 pm

RECEIVED 12/12/2022

Bcon22/0752 - WDC Approved Plans - 17/01/2023

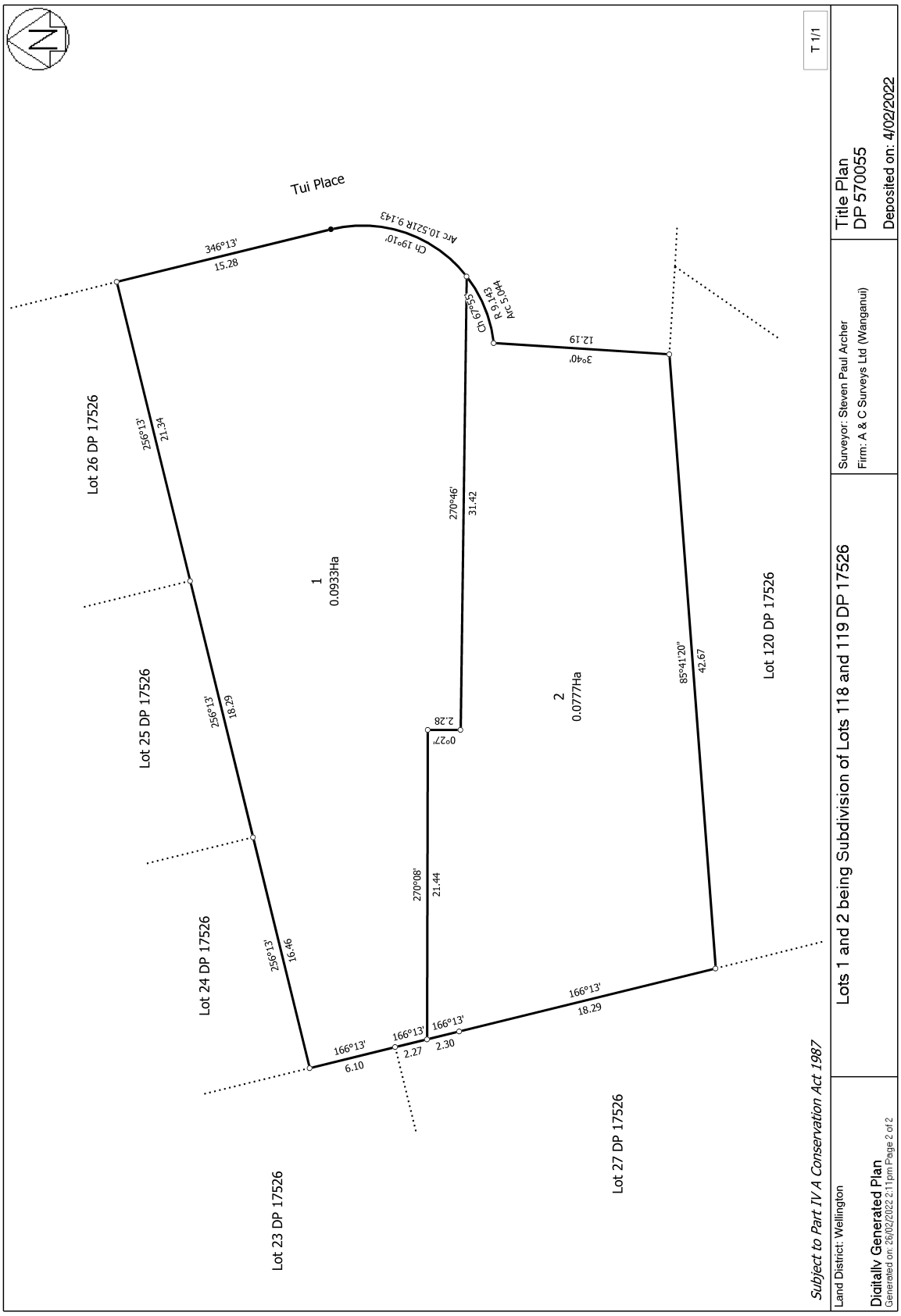

RECEIVED 12/12/2022

Bcon22/0752 - WDC Approved Plans - 17/01/2023

6 December 2022

Whanganui District Council
101 Guyton St, Whanganui 4501

Authorisation letter

As the owner of the property at 9 Tui Place Whanganui, I have authorised Marcelo Lapuz, to act on my behalf with Whanganui District Council for the purpose of lodging an application for building consent.

Yours Sincerely

Signed



Noel Oli

RECEIVED 12/12/2022

Bcon22/0752 - WDC Approved Plans - 17/01/2023

Form 2A

Memorandum from licensed building practitioner: Certificate of design work

Section 30C or 45, Building Act 2004

Please fill in the form as fully and correctly as possible.
If there is insufficient room on the form for requested details, please continue on another sheet and attach the additional sheet(s) to this form.

THE BUILDING			
Street address:	9 Tui Place		
Suburb:	Gonville		
Town/City:	Whanganui	Postcode:	4501

THE OWNER(S)			
Name(s):	Mr Noel Oli		
Mailing address:	9 Tui Place		
Suburb:	Gonville	PO Box/Private Bag:	
Town/City:	Whanganui	Postcode:	4501
Phone number:	021-02309214	Email address:	oli.noel@yahoo.co.nz

RECEIVED 12/12/2022

Bcon22/0752 - WDC Approved Plans - 17/01/2023

BASIS FOR PROVIDING THIS MEMORANDUM

I am providing this memorandum in my role as the: Please tick the option that applies ✓

○	**sole** designer of all of the RBW design outlined in this memorandum – I carried out all of the RBW design work myself – no other person will be providing any additional memoranda for the project
✓	**lead** designer who carried out some of the RBW design myself but also supervised other designers – this memorandum covers their RBW design work as well as mine, and **no other** person will be providing any additional memoranda for the project
○	**lead** designer for all but specific elements of RBW – this memorandum only covers the RBW design work that I carried out or supervised and the **other** designers will provide their own memorandum relating to their specific RBW design
○	**specialist** designer who carried out specific elements of RBW design work as outlined in this memorandum – other designers will be providing a memorandum covering the remaining RBW design work

IDENTIFICATION OF DESIGN WORK THAT IS RESTRICTED BUILDING WORK (RBW)

I Marcelo Lapuz carried out / supervised the following design work that is restricted building work

PRIMARY STRUCTURE: B1

Design work that is RBW	Description of RBW	Carried out or supervised	Reference to plans and specifications
Tick ✓ if included. Cross ✗ if excluded	If appropriate, provide details of the RBW	Tick ✓ whether you carried out this design work or supervised someone else carrying out this design work	If appropriate, specify references
All RBW design work relating to B1 ✗	N/A	○ Carried out ○ Supervised	N/A
Foundations and subfloor framing ✓	Pile Foundation	✓ Carried out ○ Supervised	Sht 4 Foundation plan

RECEIVED 12/12/2022

Bcon22/0752 - WDC Approved Plans - 17/01/2023

Design work that is RBW	Description of RBW	Carried out or supervised	Reference to plans and specifications
Tick ✓ if included. Cross ✗ if excluded	If appropriate, provide details of the RBW	Tick ✓ whether you carried out this design work or supervised someone else carrying out this design work	If appropriate, specify references
Walls ☑	Timber Framed Wall (NZS 3604 - 2011)	☑ Carried out ○ Supervised	Sht 10 Section
Roof ☑	Timber Rafters	☑ Carried out ○ Supervised	Sht 9 &10 Roof Framing Plan Section
Columns and beams ☑	Timber Lintels	☑ Carried out ○ Supervised	Sht 8 Dimension Plan
Bracing ☑	GIB Wall Bracing (NZS 3604 - 2011)	☑ Carried out ○ Supervised	Sht 11 Bracing Plan Bracing Schedule
Other ☒	N/A	○ Carried out ○ Supervised	N/A

RECEIVED 12/12/2022

Bcon22/0752 - WDC Approved Plans - 17/01/2023

Design work that is RBW		Description of RBW	Carried out or supervised	Reference to plans and specifications
Tick ✓ if included. Cross ✗ if excluded		If appropriate, provide details of the RBW	Tick ✓ whether you carried out this design work or supervised someone else carrying out this design work	If appropriate, specify references
EXTERNAL MOISTURE MANAGEMENT SYSTEMS: E2				
All RBW design work relating to E2	✗	N/A	○ Carried out ○ Supervised	N/A
Damp proofing	✗	N/A	○ Carried out ○ Supervised	N/A
Roof cladding or roof cladding system	✓	Longrun Colour Steel Corrugated Roofing	✓ Carried out ○ Supervised	Sht 7, 9 Elevations Roof Plan
Ventilation system (for example, subfloor or cavity)	✓	Stria Wall Cladding on Cavity battens & Sub floor	✓ Carried out ○ Supervised	Sht 7 Elevations
Wall cladding or wall cladding system	✓	Stria Wall Cladding	✓ Carried out ○ Supervised	Sht 7 Elevations
Waterproofing	✓	Aquadepense water proofing membrane	✓ Carried out ○ Supervised	Sht -5 New Floor Layout
Other	✗	N/A	○ Carried out ○ Supervised	N/A

RECEIVED 12/12/2022

Bcon22/0752 - WDC Approved Plans - 17/01/2023

Design work that is RBW	Description of RBW	Carried out or supervised	Reference to plans and specifications
Tick ✓ if included. Cross ✗ if excluded	If appropriate, provide details of the RBW	Tick ✓ whether you carried out this design work or supervised someone else carrying out this design work	If appropriate, specify references
FIRE SAFETY SYSTEMS: C1 - C6			
Emergency warning systems Evacuation and fire service operation systems ☑ Suppression or control systems Other	Smoke Alarm	☑ Carried out ○ Supervised	Sht 11 Smoke Alarm Extractor Fan

Note: The design of fire safety systems is only restricted building work when it involves small-to-medium apartment buildings as defined by the Building (Definition of Restricted Building Work) Order 2011.

WAIVERS AND MODIFICATIONS

Waivers or modifications of the Building Code are required. ○ Yes ☑ No

If Yes, provide details of the waivers or modifications below:

Clause	Waiver/modification required
List relevant clause numbers of building code	Specify nature of waiver or modification of building code required

RECEIVED 12/12/2022

Bcon22/0752 - WDC Approved Plans - 17/01/2023

ISSUED BY

Name and contact details of the licensed building practitioner who is licensed to carry out or supervise design work that is restricted building work.

Name: Marcelo Lapuz	LBP or Registration number: BP 106897
The practitioner is a: ☑ Design LBP ○ Registered architect ○ Chartered professional engineer	
Design Entity or Company (optional): M R Lapuz Architectural Design	
Mailing address (if different from below):	
Street address/Registered office: 85 Springvale Road	
Suburb: Springvale	Town/City: Whanganui
PO Box/Private Bag:	Postcode: 4501
Phone number:	Mobile: 02102398523
After hours:	Fax:
Email address: mrlapuz@yahoo.com mrlapuz16@gmail.com	Website:

DECLARATION

I Marcelo Lapuz LBP, state that I have applied the skill and care reasonably required of a competent design professional in carrying out or supervising the Restricted Building Work (RBW) described in this form, and that based on this, I also state that the RBW:

- Complies with the building code, or
- ~~Complies with the building code subject to any waiver or modification of the building code recorded on this form~~

Signature: 

Date: 5 December 2022

RECEIVED 12/12/2022

Bcon22/0752 - WDC Approved Plans - 17/01/2023

GIB EzyBrace® Bracing Software

Demand Calculation Sheet

Job Details

Name:	Mr Noel Oli
Street and Number:	9 Tui Place
Lot and DP Number	
City/Town/District	Whangnaui
Designer	Marcelo Lapuz
Company	M R Lapuz Architectural Design
Date	6 December 2022

Building Specification

Number of Storeys	1
Floor Loading	2 kPa
Foundation Type	Subfloor
Subfloor Cladding Weight	Light
	Single
Cladding Weight	Light
Roof Weight	Heavy
Room in Roof Space	No
Roof Pitch (degrees)	30
Roof Height above Eaves (m)	2.6
Building Height to Apex (m)	5.1
Ground to Lower Floor (m)	0.5
Average Stud Height (m)	2.4
Building Length (m)	6.0
Building Width (m)	3.83
Building Plan Area (m²)	23

Building Location

Wind Zone = Medium

Earthquake Zone 2

Soil Type:	D & E (Deep to Very Soft)
Annual Prob. of Exceedance:	1 in 500 (Default)

Bracing Units required for Wind

	Along	Across
Single Level	**183**	**268**
Subfloor Level	**381**	**476**

Bracing Units required for Earthquake

	Along & Across
Single Level	**263**
Subfloor Level	**304**

RECEIVED 12/12/2022

Bcon22/0752 - WDC Approved Plans - 17/01/2023

Single Level Along Resistance Sheet

Job Name: Mr Noel Oli

Timber Floor Limit of 120 BUs/m Applied

Line	Element	Length (m)	Angle (degrees)	Stud Ht. (m)	Type	Supplier	Wind BUs	EQ BUs	Wind	EQ
									Demand	
									183	263
									Achieved	
									382 209%	339 129%
a	1	2.50		2.4	GS1-N	GIB®	173	150		
	2	0.70		2.4	GS2-N	GIB®	58	52		
									230 OK	202 OK
b	1	0.70		2.4	GS1-N	GIB®	41	41		
	2	1.60		2.4	GS1-N	GIB®	110	96		
									152 OK	137 OK

RECEIVED 12/12/2022

Bcon22/0752 - WDC Approved Plans - 17/01/2023

Single Level Across Resistance Sheet

Job Name: Mr Noel Oli

Timber Floor Limit of 120 BUs/m Applied

									Wind	EQ
									Demand	
									268	263
									Achieved	
Line	Element	Length (m)	Angle (degrees)	Stud Ht. (m)	Type	Supplier	Wind BUs	EQ BUs	356 133%	314 119%
m	1	1.70		2.4	BL1-H	GIB®	204	177		
									204 OK	177 OK
n	1	1.70		2.4	GS1-N	GIB®	117	102		
	2	0.60		2.4	GS1-N	GIB®	34	35		
									152 OK	137 OK

RECEIVED 12/12/2022

Bcon22/0752 - WDC Approved Plans - 17/01/2023

Custom Wall Elements

Supplier	System	Min. Length m	Wind BUs/m	EQ BUs/m

Custom Subfloor Elements

Supplier	System	Min. Length m	Wind BUs or BUs/m	EQ BUs or BUs/m

RECEIVED 12/12/2022

Bcon22/0752 - WDC Approved Plans - 17/01/2023

DESIGN CERTIFICATE

Technical basis for structural design methodology contained in designIT for houses - New Zealand.

designIT for houses, New Zealand has been developed by experienced timber engineers to assist designers in selecting appropriate sizes of structural laminated veneer lumber products manufactured by Carter Holt Harvey LVL Limited (including hySPAN, hy90, hyONE and hyJOIST) and other generic stress grades of timber, to be used as structural elements for the construction of buildings that fall within the scope of NZS 3604.

The design methodology used for the software complies with the loading and general design requirements contained within AS/NZS 1170 and with timber structural design in accordance with NZS 3603:1993 including Amendment 4 (Verification method B1/VM1, 6.1).

designIT relies on the accurate input of span and loading information by the user. Where accurate inputs are submitted the product and/or stress grade and the size given will comply with the structural requirements of the New Zealand Building Code (NZBC), provided the installation is in accordance with the installation requirements provided by designIT and/or in product literature and/or NZS 3604, or specific engineering design, as appropriate.

Futurebuild LVL and SG8 components, when used and treated to the required treatment levels prescribed in NZS 3602 and NZS 3604, as modified by Acceptable Solution B2/AS1, will comply with the requirements of the NZBC (Acceptable Solution B2/AS1, 3.2).

References:
1. NZS 3603:1993 Timber Structures Standard.
2. NZS 3604:2011 Timber-framed buildings.
3. AS/NZS 1170:2002 Structural design actions, Parts 0 and 1.
4. AS/NZS 1170:2011 Structural design actions, Part 2: Wind actions.
5. AS/NZS 1170:2003 Structural design actions, Part 3: Snow and ice actions.
6. AS 1720.1:2010 Timber structures. Part 1: Design methods.
7. AS 1720.3:2016 Timber structures. Part 3: Design criteria for timber-framed residential buildings.

This Design Certificate, and any associated warranty/certification, is void where there has been substitution of alternate products not detailed within the Member Specification.

Version date: 29 September, 2022

For further information or advice contact:
Carter Holt Harvey LVL Limited,
173 Captain Springs Road, Onehunga. Auckland
Telephone: 0800 808 131
Email: designit@futurebuild.co.nz
Web: https://futurebuild.co.nz/

RECEIVED 12/12/2022

Specifier details:

Specifier:	Marcelo Lapuz
Business name:	M R Lapuz Architectural Design
Address:	85 Springvale Road Whanganui 4501
Email:	mrlapuz@yahoo.com
Contact:	**Mobile:** 02102398523

Project & site details:

Project:	Proposed House Alteration
Site address:	9 Tui Place Whanganui
For (owner/s):	Nole Oli
Design wind zone	Medium
Snow loading	Design snow zone: N0

MEMBER DESIGN DETAILS

Member 1

1) Member code and description	SB1 - Strutting beams - Supporting underpurlins and ceiling joists
2) Date prepared	09 August 2022

Bcon22/0752 - WDC Approved Plans - 17/01/2023

3) Serviceability criteria AS 1720.1: 2010 and AS 1720.3: 2016

4) Design inputs

Span	5.9 m
Ceiling load width 'CLW'	1.8 m
Roof area supported	6.0 m²
Roof type and mass	Heavy roof and ceiling - 90 kg/m²

5) Member specification

Size, stress grade/product	Use 360 x 90 hySPAN
Material type	Structural Laminated Veneer Lumber to AS/NZS 4357

6) Serviceability

Load case	Limit[3] on average deflection[2]	Estimated average deflection[2]	Rigidity ratio[4]
Long term load - G + $\Psi_L Q^*$	12.0 mm	11.3 mm (long term)	1.1
Live load - $\Psi_s Q$	12.0 mm	1.4 mm	8.4

*Critical serviceability load case
See 'Notes for interpretation of serviceability data' at the end of this report

7) Reactions

Load case	k_1[1]	Limit States Design Reaction[2,3] End kN[4]
1.35G	0.60	-5.7
1.2G + 1.5Q	0.80	-7.6
1.2G + W_u + $\Psi_c Q$	1.00	-7.1
0.9G + W_u	1.00	0.5

8) Installation requirements

- Provide at least 30 mm bearing at end supports
- Chamfer allowed - see Detail H7
- Provide end restraint - see Detail H9

Notes for interpretation of serviceability data

1. 'average deflection' is an engineering concept based upon a notional estimated load, notional member rigidity and, in some cases, an approximate model of material response to environmental conditions. These parameters are, 'standardised' in AS 1170 and AS 1720.

2. Deflection is the flexural response to load 'out-of-level' measurements of installations are not necessarily deflections and can incorporate 'initial out-of-straightness', whether intended or not. Furthermore, loads can be higher/lower than the notional estimate and in any comparison with measured levels, material variability needs to also be considered. AS 1720 gives the following basis for estimation of upper bound deflections for various materials.

No 1 Framing – visually graded to NZS 3631	Average + 100%
SG grades - mechanically graded to AS/NZS 1748	Average + 43%
GL grades for glulam to AS 1328	Average + 33%
LVL to AS/NZS 4357 (includes hySPAN and hyJOIST)	Average +18%

As can be seen, comparison of the 'average deflection' for different materials, even if calculated on the same basis, does not give the whole picture!

3. The limits referred are those specified in AS 1720.3 for the stated load case.

4. 'Rigidity ratio' expresses the rigidity of the specified beam relative to the rigidity of a notional beam just meeting the serviceability requirements detailed.

Notes for interpretation of reaction data

1. Duration of load factor 'k_1' for strength as per NZS 3603:1993
2. Negative (-) reactions relate to the 'gravity' or 'downwards' force on the support

RECEIVED 12/12/2022

Bcon22/0752 - WDC Approved Plans - 17/01/2023

3. Positive reactions relate to the 'upwards' forces or 'tie-down' requirement on the support
4. End reaction includes allowance for overhang/cantilever where one has been designed

Detail H7: Chamfer of Futurebuild® LVL at Supports

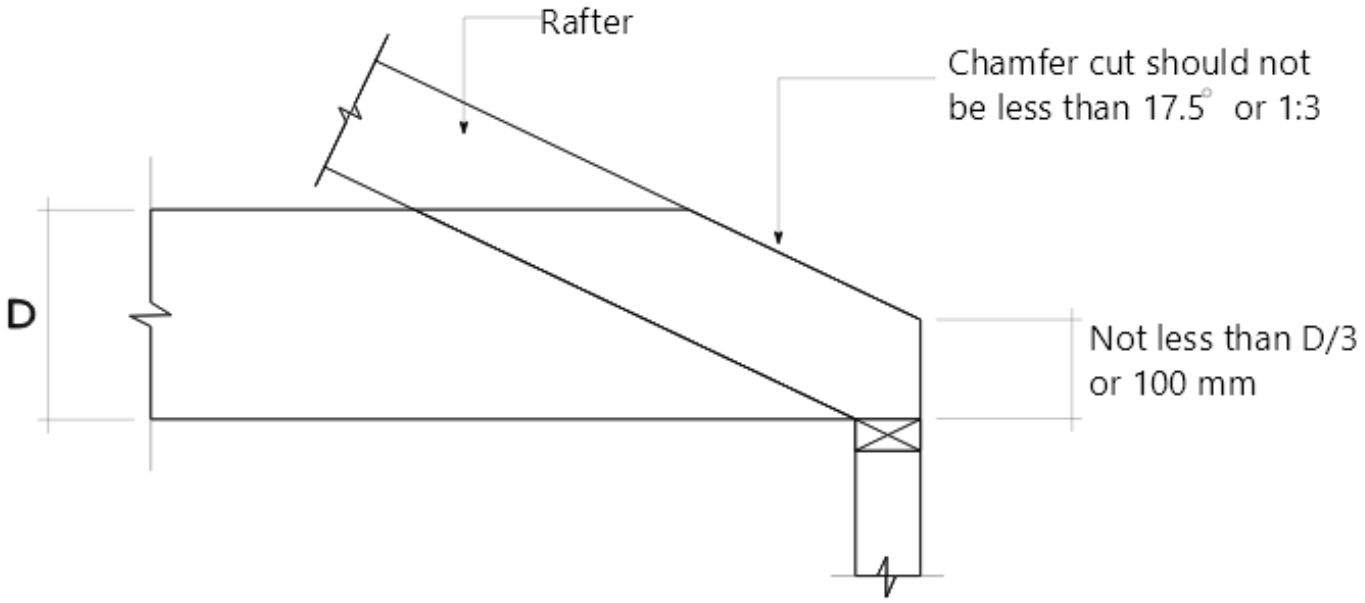

The above chamfer detail may be used for counter beams, hanging beams and strutting beams sized using designIT.

Detail H9: End Restraint for Strutting Beams - Strutting Beam Perpendicular to Ceiling Joists

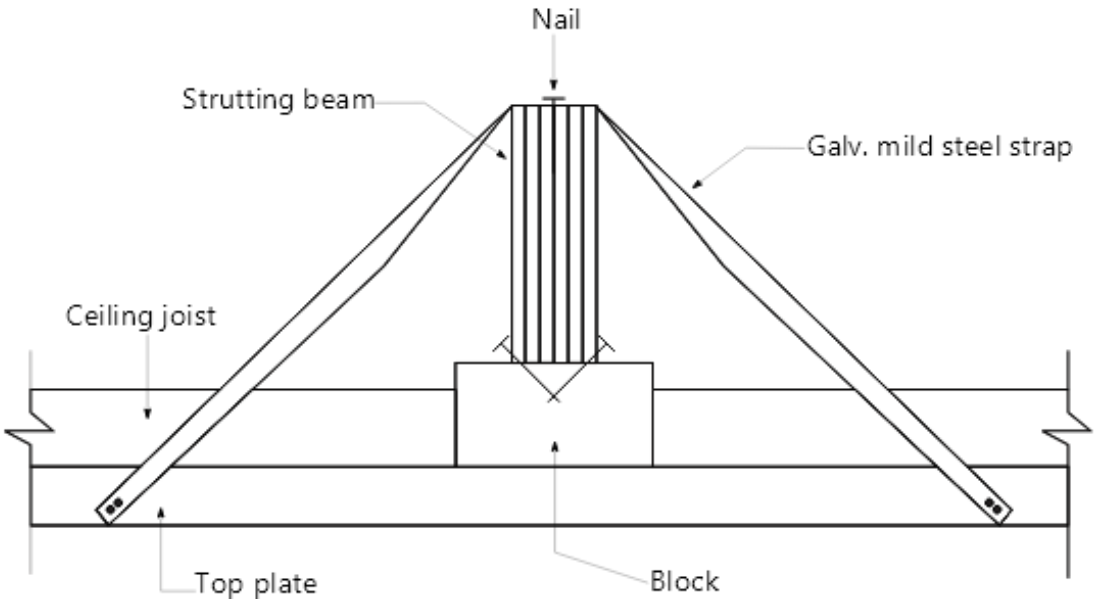

RECEIVED 12/12/2022

Bcon22/0752 - WDC Approved Plans - 17/01/2023

TABLE OF CONTENTS

1. COVER PAGE
2. SITE PLAN
3. EXISTING FLOOR PLAN
4. FOUNDATION PLAN
5. NEW FLOOR LAYOUT
6. DRAINAGE PLAN
7. ELEVATIONS
8. DIMENSION PLAN
9. ROOF PLAN / ROOF FRAMING PLAN
10. SECTION
11. BRACING PLAN / SMOKE ALARM EXTRACTOR FAN
12. TYPICAL DETAILS
13. JOINERY FLASHING / WALL CLADDING BOTTOM FLASHING DETAILS
14. WALL CLADDING CORNER FLASHING DETAIL
15. TYPICAL DETAILS
16. INTERMEDIATE BEAM SECTION DETAIL
17. POSITION OF WATER HEATER & GAS BOTTLES

PROPOSED RESIDENCE FOR

MR NOEL OLI

9 TUI PLACE,
WHANGANUI, NEW ZEALAND

RECEIVED 12/12/2022

MR LAPUZ
ARCHITECTURAL DESIGN
85 Springvale Road, Wanganui, New Zealand
Tel: 06 3477447 * Mobile: 02102398523 * Email: mrlapuz@yahoo.com

Bcon22/0752 - WDC Approved Plans - 17/01/2023

SITE AREA:	778	SQ M
40% SITE COVERAGE:	311.2	SQ M
PROPOSED RESIDENCE:	79.0	SQ M
10.1% SITE COVERAGE		

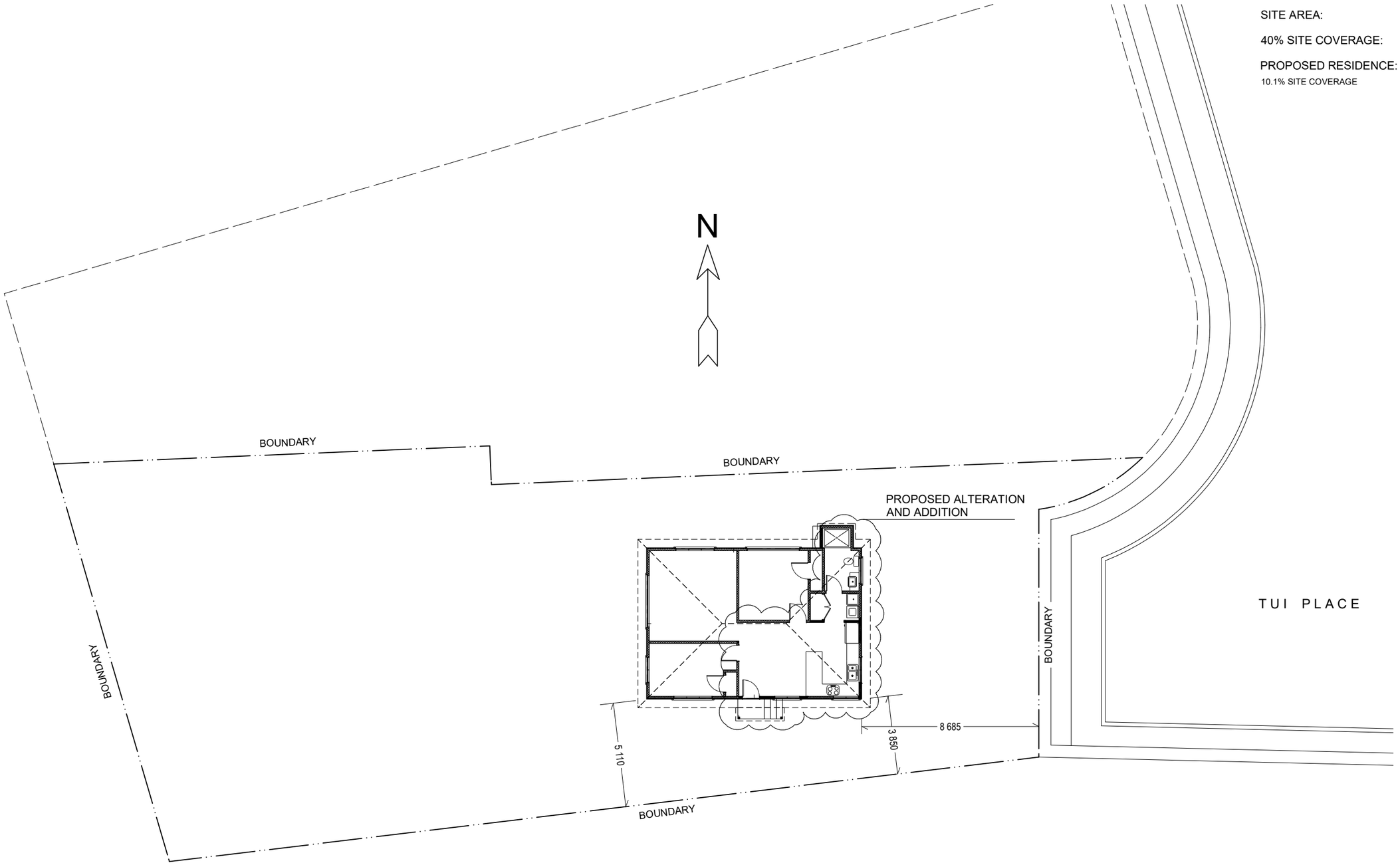

RECEIVED 12/12/2022

MR LAPUZ
ARCHITECTURAL DESIGN
85 Springvale Road, Wanganui, New Zealand
Tel: 06 3477447 * Mobile: 02102398523 * Email: mrlapuz@yahoo.com

Project	Wind Region	Wind Zone		Scale	Sheet No.
PROPOSED HOUSE ALTERATION FOR MR NOEL OLI 9 TUI PLACE, WHANGANUI	A	MEDIUM	SITE PLAN	1:200	2
	Earthquake Zone	Exposure Zone		Date 8 DEC 2022	
	2	C		Amendment	

Bcon22/0752 - WDC Approved Plans - 17/01/2023

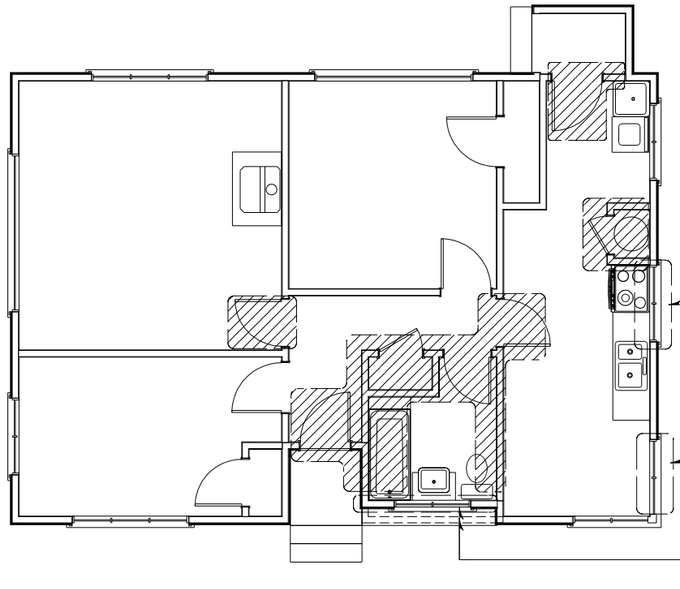

LEGEND:

AREA OF STRUCTURE
TO BE DEMOLISHED

RECEIVED 12/12/2022

MR LAPUZ
ARCHITECTURAL DESIGN
85 Springvale Road, Wanganui, New Zealand
Tel: 06 3477447 * Mobile: 02102398523 * Email: mrlapuz@yahoo.com

Project	Wind Region	Wind Zone		Scale	Sheet No.
PROPOSED HOUSE ALTERATION FOR MR NOEL OLI 9 TUI PLACE, WHANGANUI	A	MEDIUM	EXISTING FLOOR PLAN	1:100	3
	Earthquake Zone	Exposure Zone		Date 8 DEC 2022	
	2	C		Amendment	

Bcon22/0752 - WDC Approved Plans - 17/01/2023

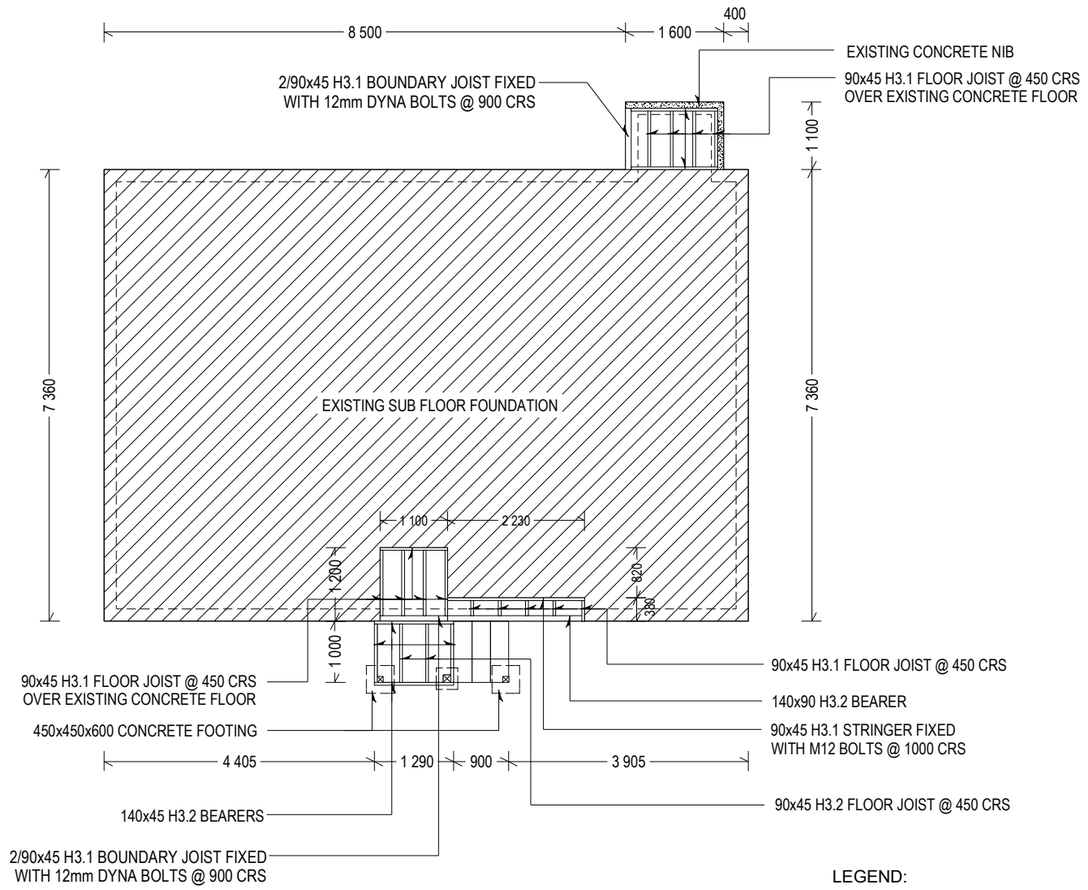

LEGEND:

⊠ 125x125 H5 ANCHOR PILES, ON
350x350x350 CONCRETE FOOTING

NOTE:

PROVIDE DPC BETWEEN JOIST AND
EXISTING CONCRETE FLOOR SLAB

WIND ZONE: MEDIUM

TIMBER GRADES: ALL TIMBER TO BE USE SHALL BE MSG 8 UNLESS SPECIFIED

METAL FIXING DURABILITY REQUIREMENTS:

GALVANISED STEEL : FOR SHELTERED
STAINLESS STEEL : FOR EXPOSED AND SHELTERED LESS THAN 600mm FROM GROUND LEVEL

MR LAPUZ
ARCHITECTURAL DESIGN
85 Springvale Road, Wanganui, New Zealand
Tel: 06 3477447 * Mobile: 02102398523 * Email: mrlapuz@yahoo.com

Project	Wind Region	Wind Zone		Scale	Sheet No.
PROPOSED HOUSE ALTERATION FOR MR NOEL OLI 9 TUI PLACE, WHANGANUI	A	MEDIUM	FOUNDATION PLAN	1:100	4
	Earthquake Zone	Exposure Zone		Date 8 DEC 2022	
	2	C		Amendment	

RECEIVED 12/12/2022

Bcon22/0752 - WDC Approved Plans - 17/01/2023

NOTES:

ALL HOT WATER PIPES OUTSIDE THE BUILDING SHALL BE THERMALLY INSULATED. ONCE WITHIN THE BUILDING, THE PIPES FROM WATER HEATERS SHALL MEET THE REQUIREMENTS OF 3.7.1

G12.3.6

WHERE HOT WATER IS PROVIDED TO SANITARY FIXTURES AND SANITARY APPLIANCES, USED FOR PERSONAL HYGIENE, IT MUST BE DELIVERED AT TEMPERATURE THAT AVOIDS THE LIKELIHOOD OF SCALDING

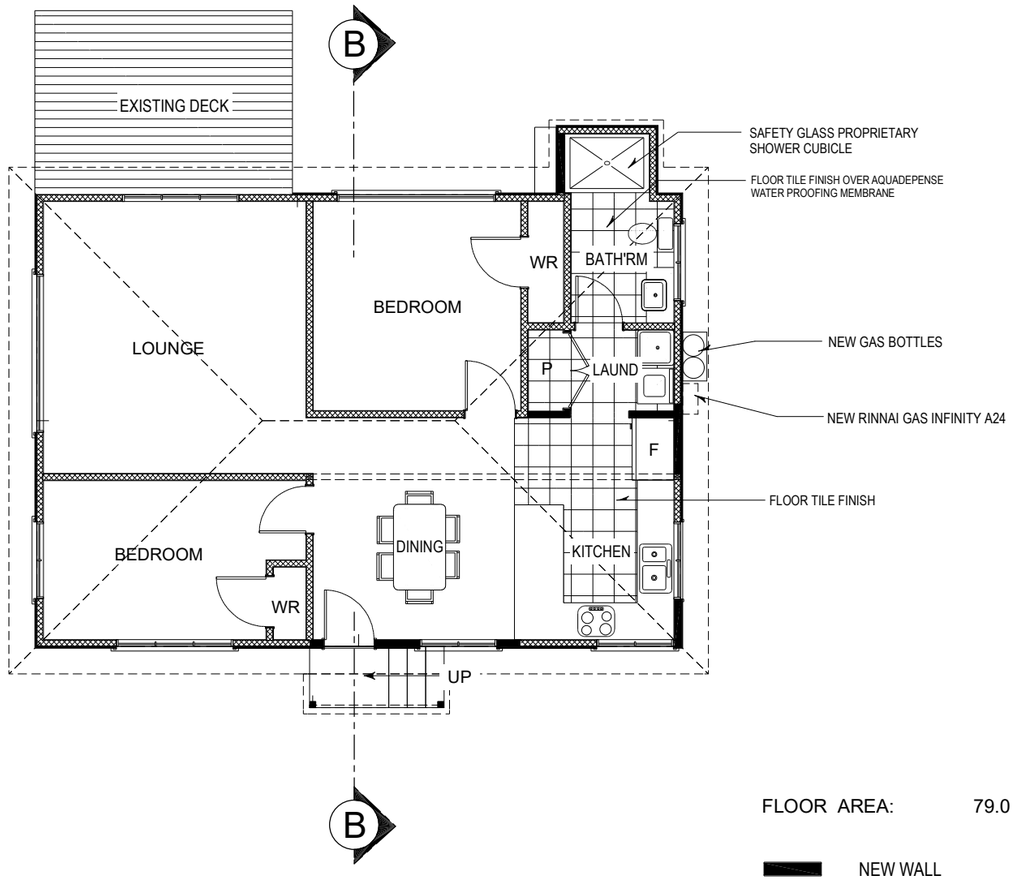

GENERAL NOTE:

1. ALL WORKS SHOWN OR IMPLIED TO BE CARRIED OUT IN STRICT ACCORDANCE WITH THE NZ BUILDING CODE AND LOCAL AUTHORITY REQUIREMENTS

2. ALL DIMENSIONS TO BE CHECKED ON SITE BEFORE COMMENCING WORK, ANY DISCREPANCY SHALL BE REFERRED TO THE DESIGNER FOR DECISIONS BEFORE PROCEEDING WORKS.

3. ALL ARCHITECTURAL DRAWINGS TO BE READ IN CONJUNCTION WITH DRAWINGS AND SPECIFICATION.

FLOOR AREA: 79.0 SQ M

NEW WALL

EXISTING WALL

RECEIVED 12/12/2022

MR LAPUZ ARCHITECTURAL DESIGN
85 Springvale Road, Wanganui, New Zealand
Tel: 06 3477447 * Mobile: 02102398523 * Email: mrlapuz@yahoo.com

Project	Wind Region	Wind Zone		Scale	Sheet No.
PROPOSED HOUSE ALTERATION FOR MR NOEL OLI 9 TUI PLACE, WHANGANUI	A	MEDIUM	NEW FLOOR LAYOUT	1:100	5
	Earthquake Zone	Exposure Zone		Date 8 DEC 2022	
	2	C		Amendment	

Bcon22/0752 - WDC Approved Plans - 17/01/2023

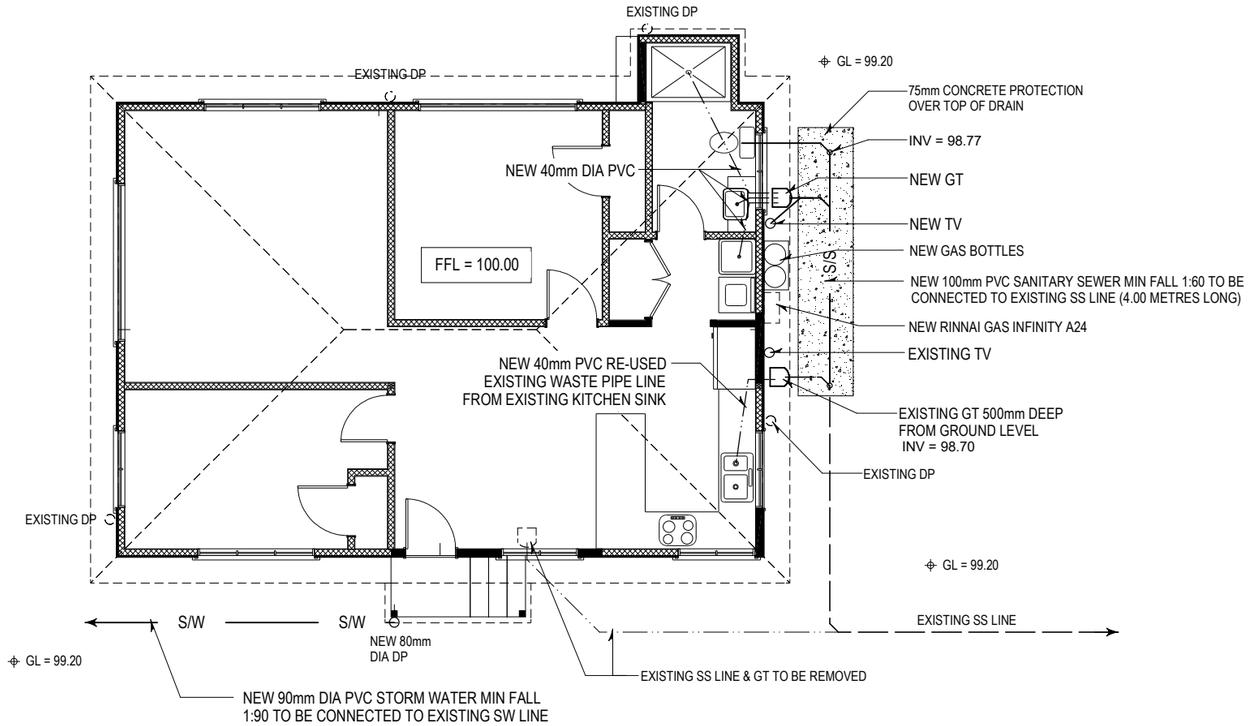

WASTE PIPES SIZES & GRADES

FIXTURE	PIPE DIAMETER (mm)	GRADIENT
WATER CLOSET	100	1:60
VANITY	40	1:40
SHOWER	40	1:40
KITCHEN SINK	40	1:40
LAUNDRY TUB	40	1:40

MR LAPUZ
ARCHITECTURAL DESIGN
85 Springvale Road, Wanganui, New Zealand
Tel: 06 3477447 * Mobile: 02102398523 * Email: mrlapuz@yahoo.com

Project	Wind Region	Wind Zone		Scale	Sheet No.
PROPOSED HOUSE ALTERATION FOR MR NOEL OLI 9 TUI PLACE, WHANGANUI	A	MEDIUM	DRAINAGE PLAN	1:100	6
	Earthquake Zone	Exposure Zone		Date 8 DEC 2022	
	2	C		Amendment	

RECEIVED 12/12/2022

Bcon22/0752 - WDC Approved Plans - 17/01/2023

RISK MATRIX FOR ALL ELEVATIONS		
WIND ZONE	MEDIUM	0
NUMBER OF STOREYS	LOW	0
ROOF WALL INTERSECTION	MEDIUM	1
EAVES WIDTH	HIGH	2
ENVELOP COMPLEXITY	MEDIUM	1
DECK DESIGN	LOW	0
TOTAL SCORE		4

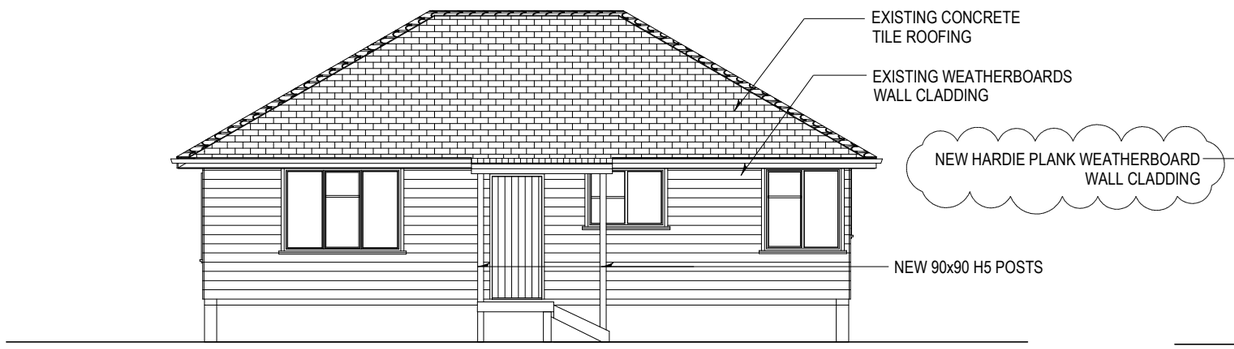

SOUTH ELEVATION



WEST ELEVATION

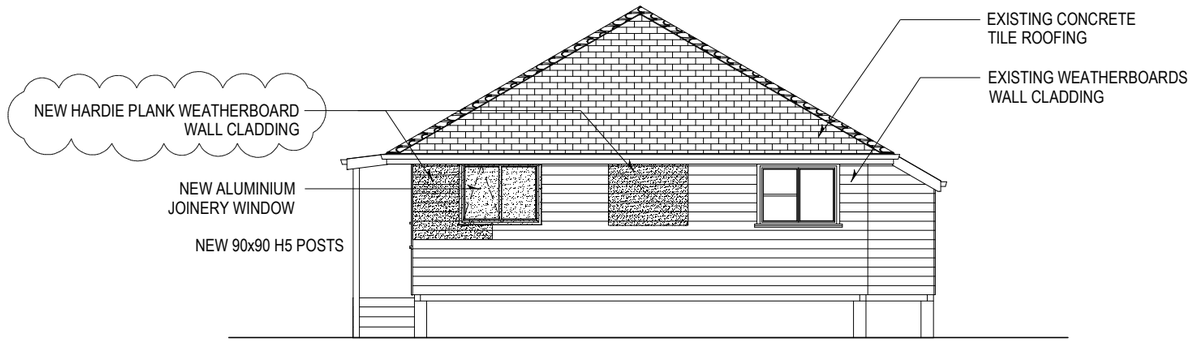

WEST ELEVATION

* BATHROOM WINDOW TO BE UPGRADED TO SAFETY GLASS

MR LAPUZ ARCHITECTURAL DESIGN
85 Springvale Road, Wanganui, New Zealand
Tel: 06 3477447 * Mobile: 02102398523 * Email: mrlapuz@yahoo.com

Project	Wind Region	Wind Zone		Scale	Sheet No.
PROPOSED HOUSE ALTERATION FOR MR NOEL OLI 9 TUI PLACE, WHANGANUI	A	MEDIUM	ELEVATIONS	1:100	7
	Earthquake Zone	Exposure Zone		Date 8 DEC 2022	
	2	C		Amendment 11 JAN 2023 WDC RFI	

RECEIVED 12/01/2023

Bcon22/0752 - WDC Approved Plans - 17/01/2023

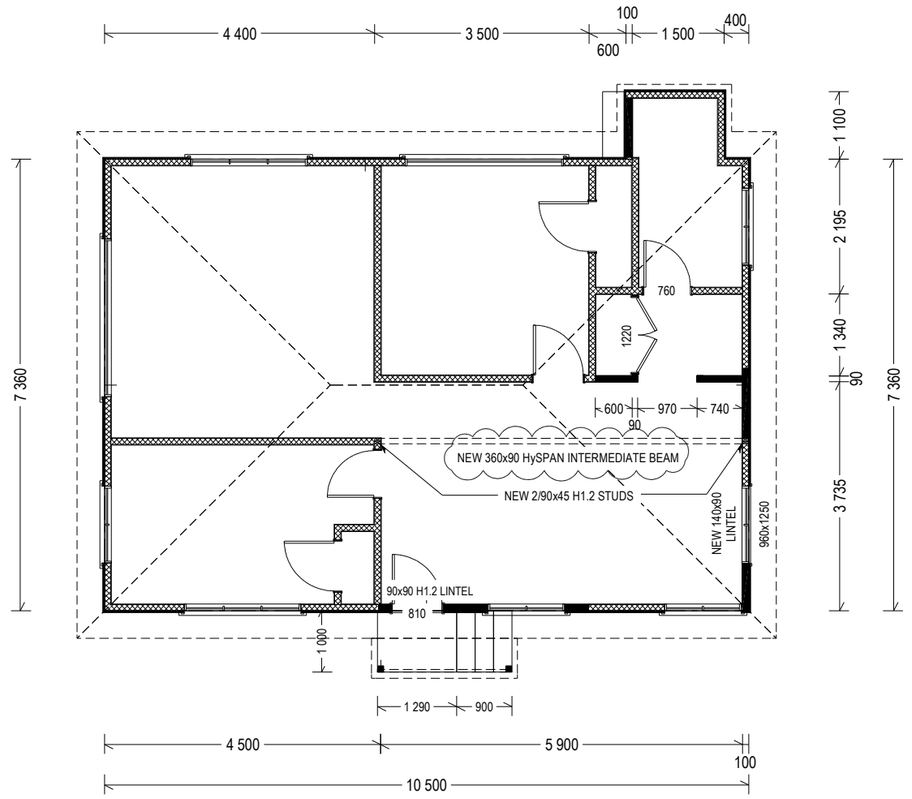

RECEIVED 12/01/2023

LINTEL FIXING:

25 x 1mm STRAP WITH 6/30 x2.5 NAILS ON ONE SIDE OF LINTEL TO TRIMMER OR DOUBLING STUD AND 25 x 1mm STRAP TAKEN OVER PLATE AND 150mm ON EACH SIDE OF LINTEL AND:
25 x 1mm STRAP TAKEN UNDER BOTTOM PLATE AND 150mm UP EACH SIDE OF TRIMMING OR DOUBLING STUD WITH 6/30 x 2.5 NAILS INTO EACH SIDE OF STUD.

MR LAPUZ
ARCHITECTURAL DESIGN
85 Springvale Road, Wanganui, New Zealand
Tel: 06 3477447 * Mobile: 02102398523 * Email: mrlapuz@yahoo.com

Project	Wind Region	Wind Zone		Scale	Sheet No.
PROPOSED HOUSE ALTERATION FOR MR NOEL OLI 9 TUI PLACE, WHANGANUI	A	MEDIUM	DIMENSIONS PLAN	1:100	8
	Earthquake Zone	Exposure Zone		Date 8 DEC 2022	
	2	C		Amendment 11 JAN 2023 WDC RFI	

Bcon22/0752 - WDC Approved Plans - 17/01/2023

ROOFING:

TIMBER RAFTERS @ 8° ROOF PITCH @ 900mm CRS WITH 70x45 H1.2
PURLINS @ 900 CRS FIXED TO RAFTERS WITH 1/80mm GAUGE
LUMBERLOK BLUE PURLINS SCREWS & THERMAKRAFT 215 SELF
SUPPORTING UNDERLAY LAID HORIZONTALLY WITH MIN 150mm LAP

LONRUN COLOURSTEEL CORRUGATED ROOFING FIXED WITH COMPATIBLE
ROOFING NAIL SCREWS & SEALED WASHER, BY QUALIFIED PERSONS
WITH FLASHINGS AS REQUIRED TO ALL JUNCTIONS - FLASHING FIXED
WITH COMPATIBLE ROOFING SCREWS & SEALING WASHERS,

E2/AS1 8.4.8 FIXING CORRUGATED
FIXING SHALL BE AS SHOWN IN TABLE 11 & 12 SHALL BE MINIMUM 12-GAUGE
SCREW, AS SHOWN IN FIG 39, WHICH COMPLIES WITH CLASS 4 AS 3566:
PART 2.4.8.1 FIXING REQUIREMENTS
FIXING SHALL :
A) BE FIXED THROUGH CRESTS
B) PENETRATE PURLINS BY A MIN OF 40mm FOR NAILS FIXING & 30mm FOR SCREWS FIXING
C) INCLUDE SEALED WASHERS OF:
i) NEOPRENE HAVING A CARBON BLACK CONTENT OF 15% OR LESS BY WEIGHT
ii) PROFILED WASHER & EPDM WASHER WHERE REQUIRED TO ALLOW FOR EXPANSION
OF THE PROFILED METAL ROOF CLADDING.

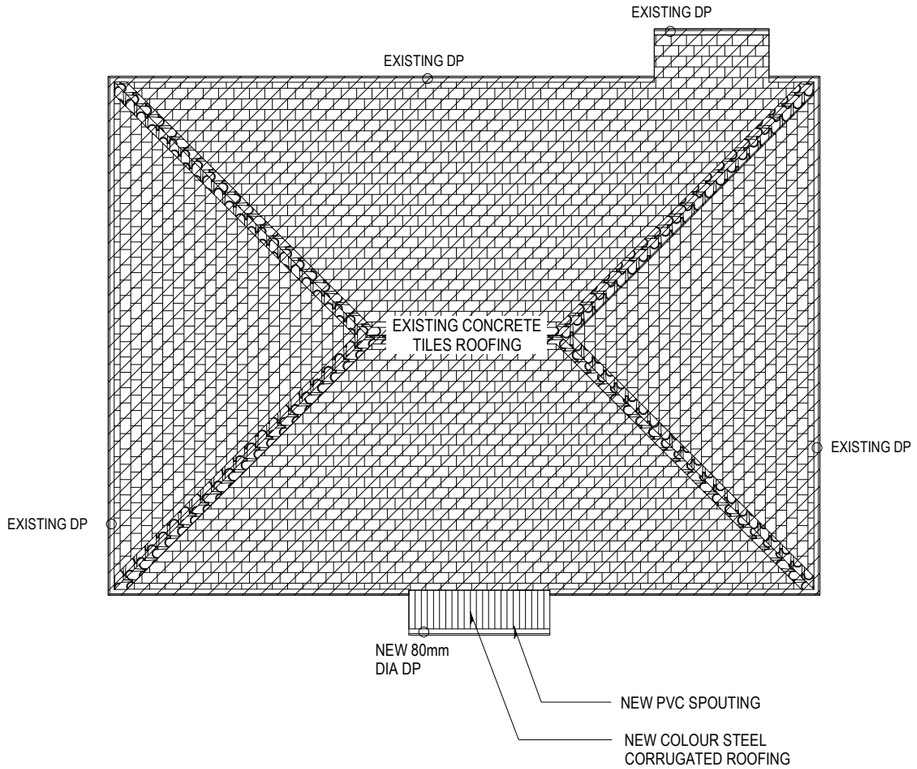

ROOF PLAN

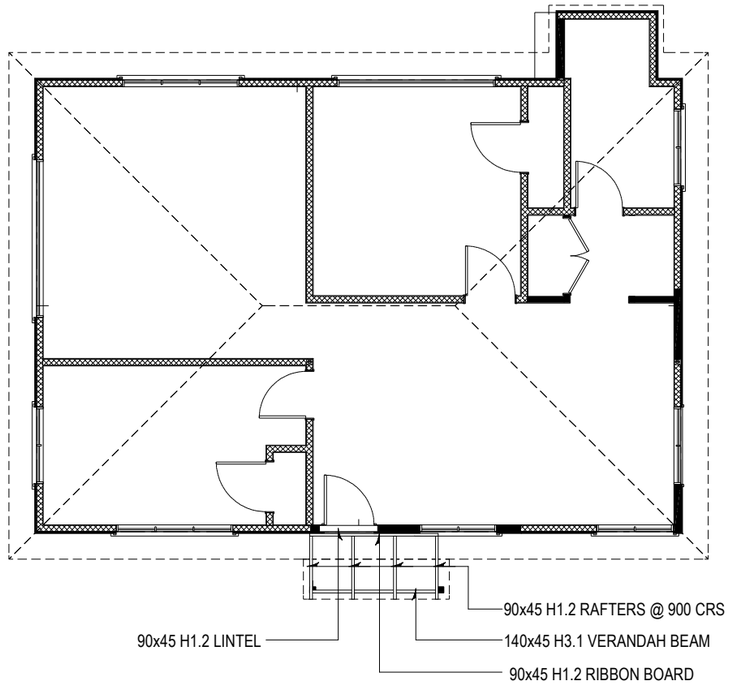

ROOF FRAMING PLAN

RECEIVED 12/12/2022

MR LAPUZ
ARCHITECTURAL DESIGN
85 Springvale Road, Wanganui, New Zealand
Tel: 06 3477447 * Mobile: 02102398523 * Email: mrlapuz@yahoo.com

Project	Wind Region	Wind Zone		Scale	Sheet No.
PROPOSED HOUSE ALTERATION FOR MR NOEL OLI 9 TUI PLACE, WHANGANUI	A	MEDIUM	ROOF PLAN ROOF FRAMING PLAN	1:100	9
	Earthquake Zone	Exposure Zone		Date 8 DEC 2022	
	2	C		Amendment	

Bcon22/0752 - WDC Approved Plans - 17/01/2023

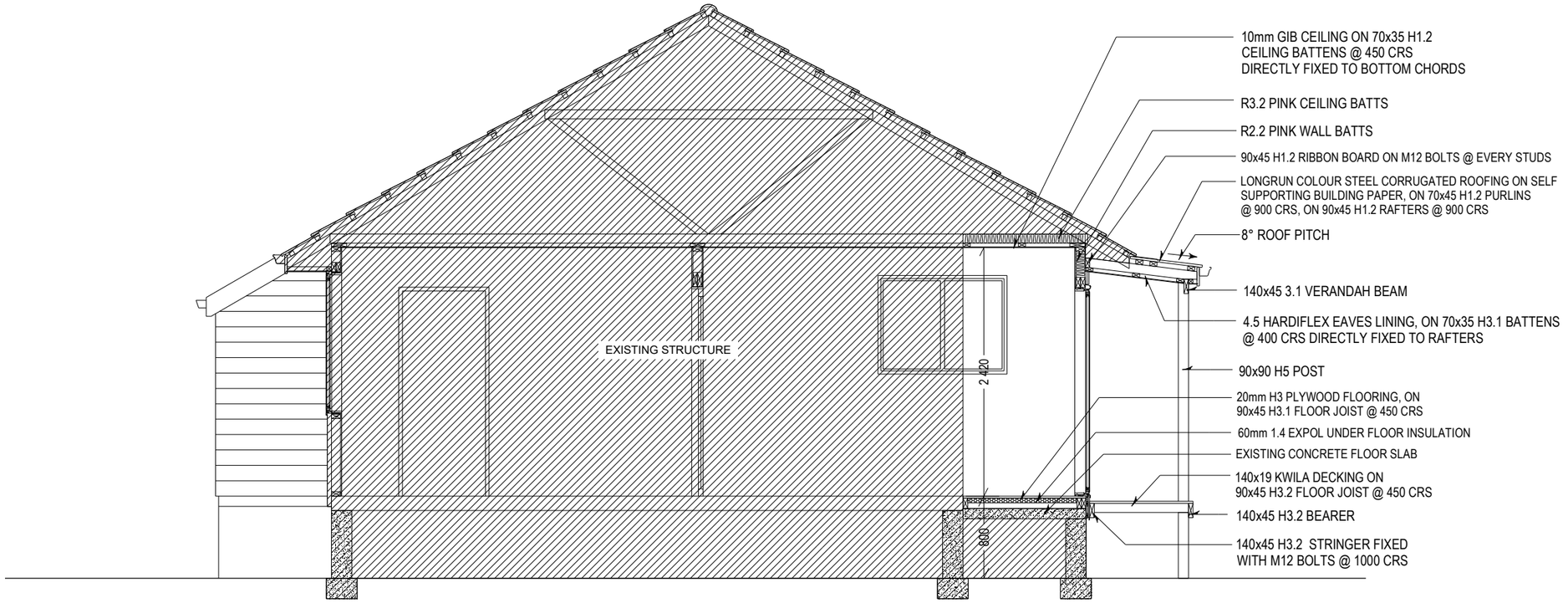

SECTION - B

WIND ZONE: MEDIUM

TIMBER GRADES: ALL FRAMING TO BE MSG 8 UNLESS SPECIFIED
2.40 M STUDS: 90x45 H1.2 @ 600 CRS FOR LOAD BEARING & NON LOAD BEARING WALL

BOTTOM PLATE FIXING:

EXTERNAL WALL TO COMPLY WITH NZS 3604:2011 M12 x 135 GALV THRU BOLTS @ NO MORE THAN 900mm CRS & NO MORE THAN 150mm FROM ANY OPENING

ROOF UNDERLAY: THERMAKRAFT 215 SELF SUPPORTING UNDERLAY LAID HORIZONTALLY WITH MIN 150mm LAP.

WALL BUILDING WRAP: THERMAKRAFT WATER GATE PLUS 295

MR LAPUZ ARCHITECTURAL DESIGN
85 Springvale Road, Wanganui, New Zealand
Tel: 06 3477447 * Mobile: 02102398523 * Email: mrlapuz@yahoo.com

Project	Wind Region	Wind Zone		Scale	Sheet No.
PROPOSED HOUSE ALTERATION FOR MR NOEL OLI, 9 TUI PLACE, WHANGANUI	A	MEDIUM	SECTION	1:50	10
	Earthquake Zone	Exposure Zone		Date 8 DEC 2022	
	2	C		Amendment	

RECEIVED 12/12/2022

Bcon22/0752 - WDC Approved Plans - 17/01/2023

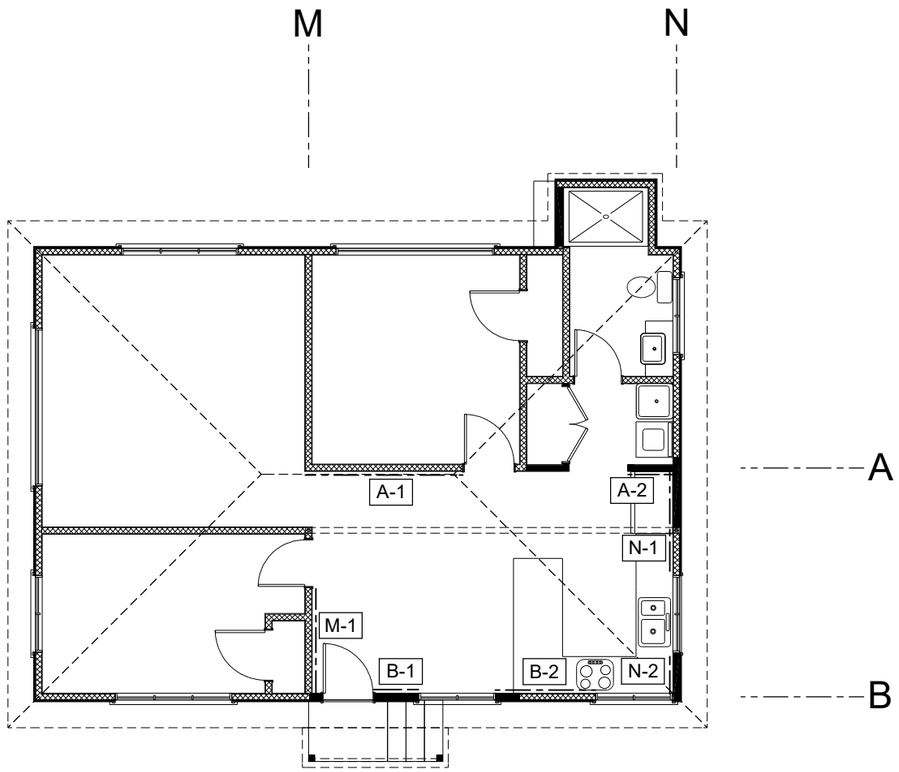

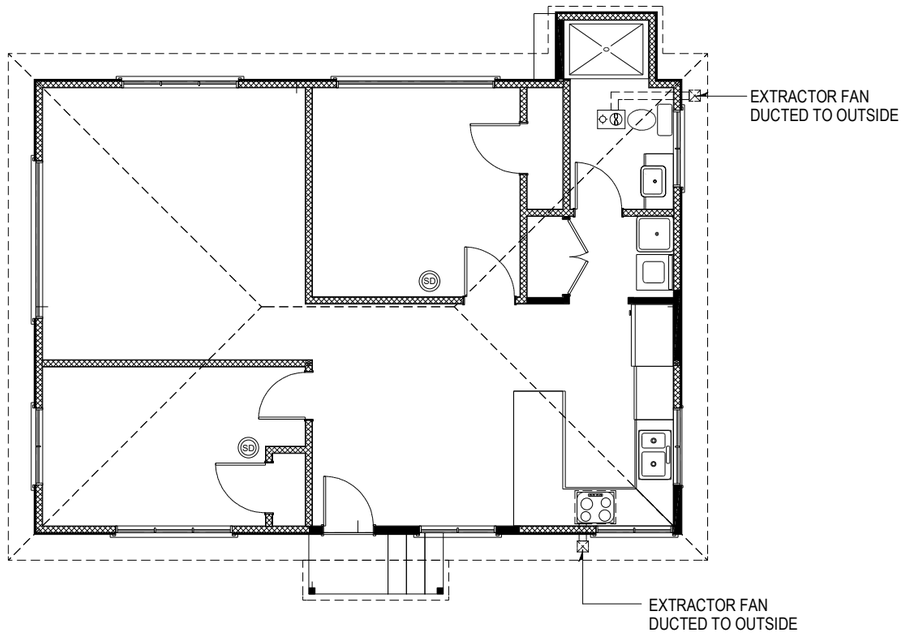

Bracing Element	Stud Height (mm)	Length (mm)	Type
Along			
	2400		
A-1		2500	GS1-N
A-2		700	GS2-N
B-1		700	GS1-N
B-2		1600	GS1-N
Bracing Element	Stud Height (mm)	Length (mm)	Type
Across			
	2400		
M-1		1700	BL1-H
N-1		1700	GS1-N
N-1		600	GS1-N

LEGEND:

	HEAT LIGHT FAN	
SD	SMOKE DETECTOR	

25 L/s FOR SHOWER, BATHS AND MECHANICAL VENTILATION FLOW RATES

50 L/s FOR COOKTOP FLOW RATES

MR LAPUZ
ARCHITECTURAL DESIGN
85 Springvale Road, Wanganui, New Zealand
Tel: 06 3477447 * Mobile: 02102398523 * Email: mrlapuz@yahoo.com

Project	Wind Region	Wind Zone		Scale	Sheet No.
PROPOSED HOUSE ALTERATION FOR MR NOEL OLI 9 TUI PLACE, WHANGANUI	A	MEDIUM	BRACING PLAN & SMOKE ALARM EXTRACTOR FAN	1:100	11
	Earthquake Zone	Exposure Zone		Date 8 DEC 2022	
	2	C		Amendment	

RECEIVED 12/12/2022

Bcon22/0752 - WDC Approved Plans - 17/01/2023

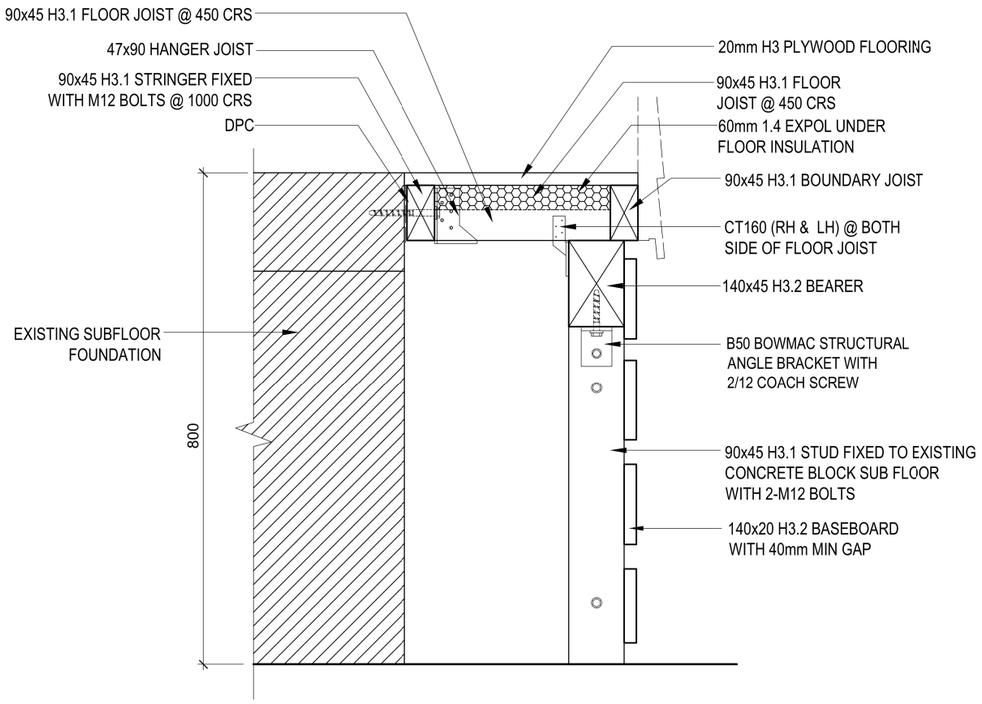

EXISTING & NEW SUBFLOOR SECTION DETAIL

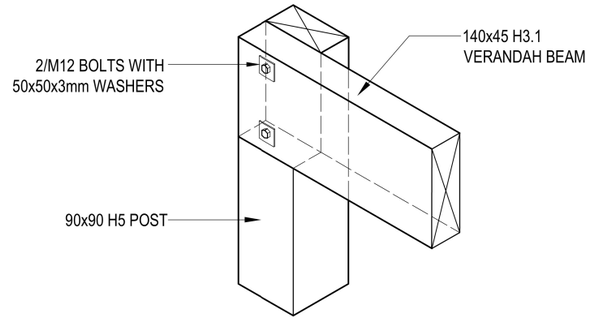

POST & BEAM FIXING DETAIL

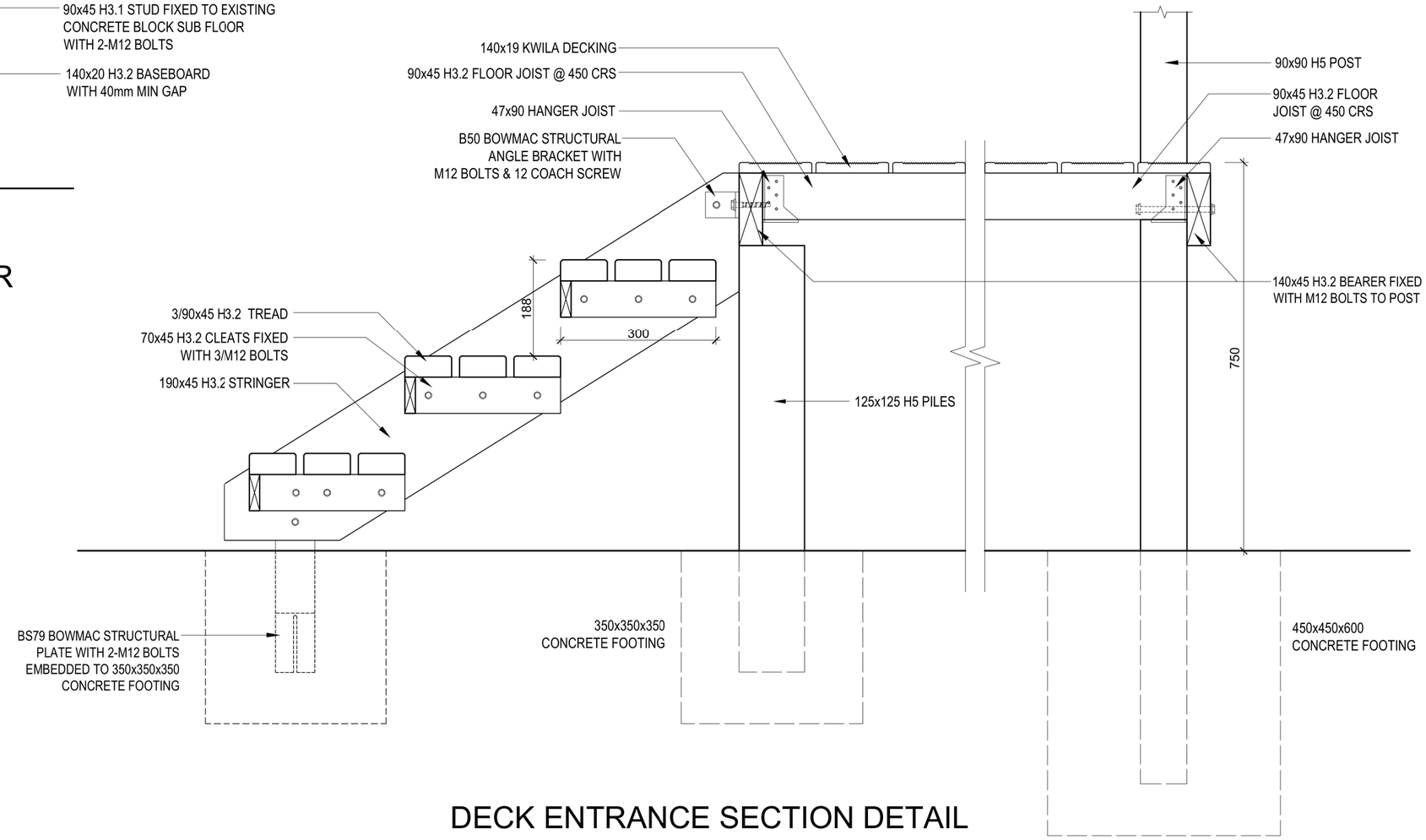

DECK ENTRANCE SECTION DETAIL

RECEIVED 12/12/2022

MR LAPUZ
ARCHITECTURAL DESIGN
85 Springvale Road, Wanganui, New Zealand
Tel: 06 3477447 * Mobile: 02102398523 * Email: mrlapuz@yahoo.com

Project	Wind Region	Wind Zone		Scale	Sheet No.
PROPOSED HOUSE ALTERATION FOR MR NOEL OLI 9 TUI PLACE, WHANGANUI	A	MEDIUM	TYPICAL DETAILS	1:100	12
	Earthquake Zone	Exposure Zone		Date 8 DEC 2022	
	2	C		Amendment	

Bcon22/0752 - WDC Approved Plans - 17/01/2023

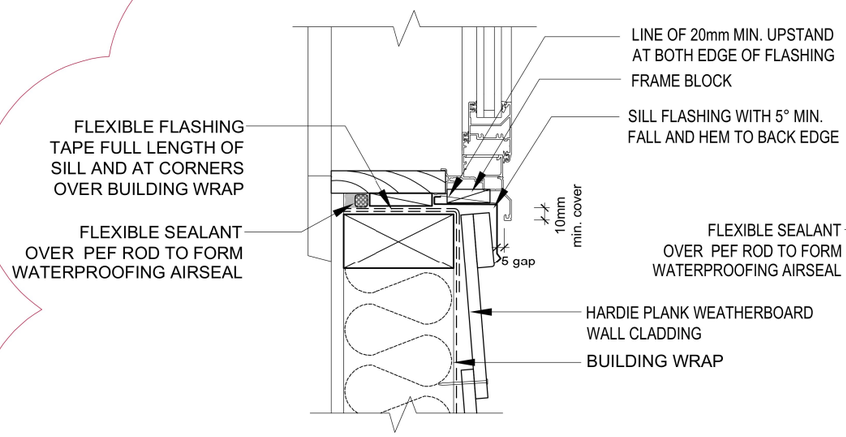

WINDOW SILL DETAIL

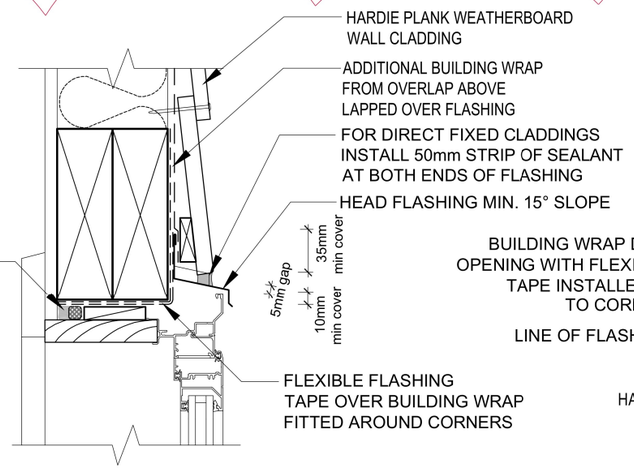

WINDOW HEAD DETAIL

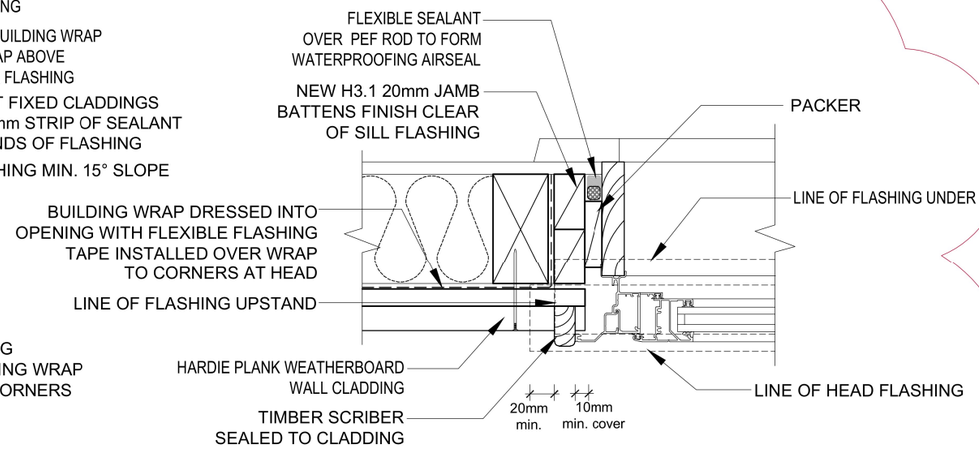

WINDOW JAMB DETAIL

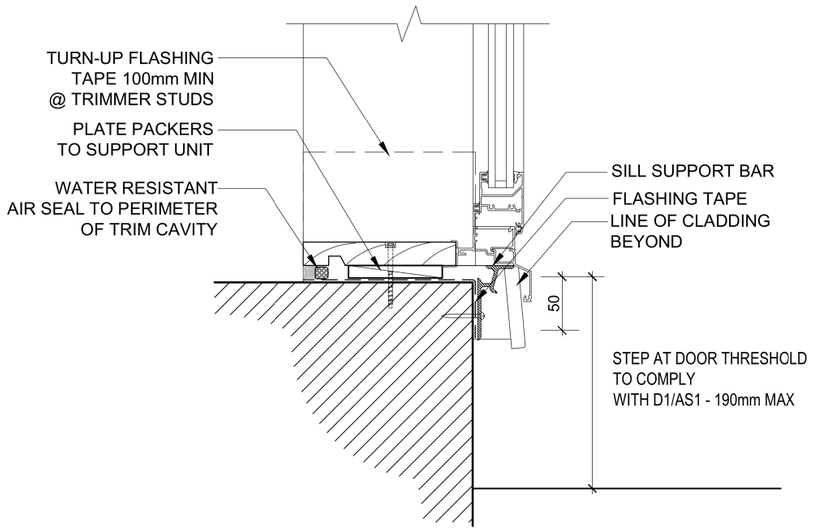

WEATHERBOARD SILL
THRESHOLD FLASHING DETAIL

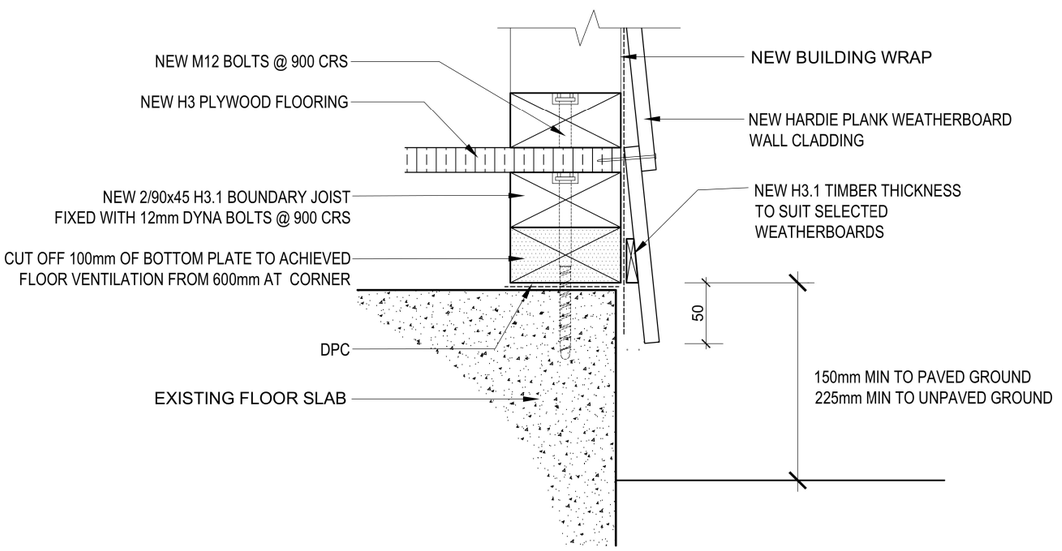

GROUND CLEARANCE

RECEIVED 12/01/2023

MR LAPUZ ARCHITECTURAL DESIGN
85 Springvale Road, Wanganui, New Zealand
Tel: 06 3477447 * Mobile: 02102398523 * Email: mrlapuz@yahoo.com

Project	Wind Region	Wind Zone		Scale	Sheet No.
PROPOSED HOUSE ALTERATION FOR MR NOEL OLI 9 TUI PLACE, WHANGANUI	A	MEDIUM	JOINERY FLASHING WALL CLADDING BOTTOM FLASHING	NTS	13
	Earthquake Zone	Exposure Zone		Date 8 DEC 2022	
	2	C		Amendment 11 JAN 2023 WDC RFI	

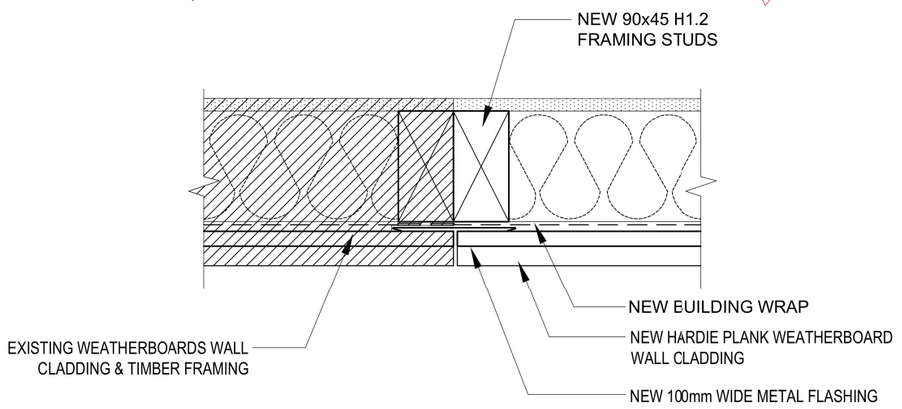

NEW & EXISTING WEATHERBOARD WALL CLADDING CONNECTION DETAIL

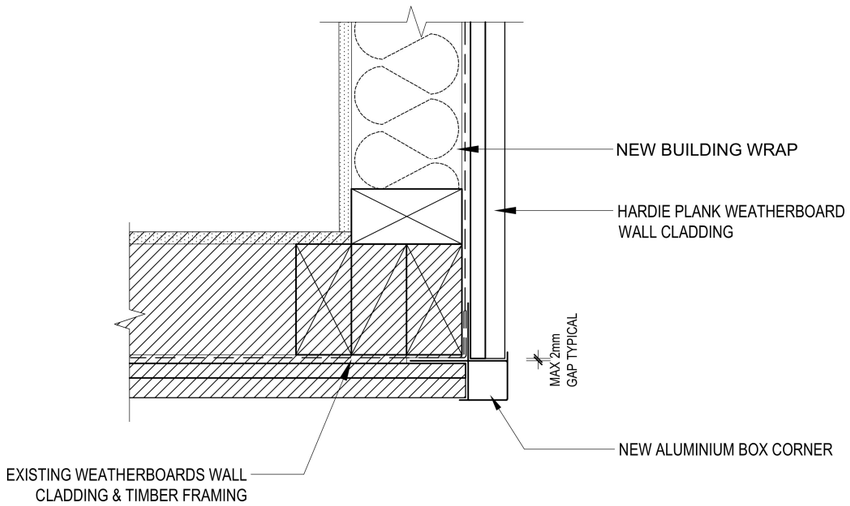

INTERIOR

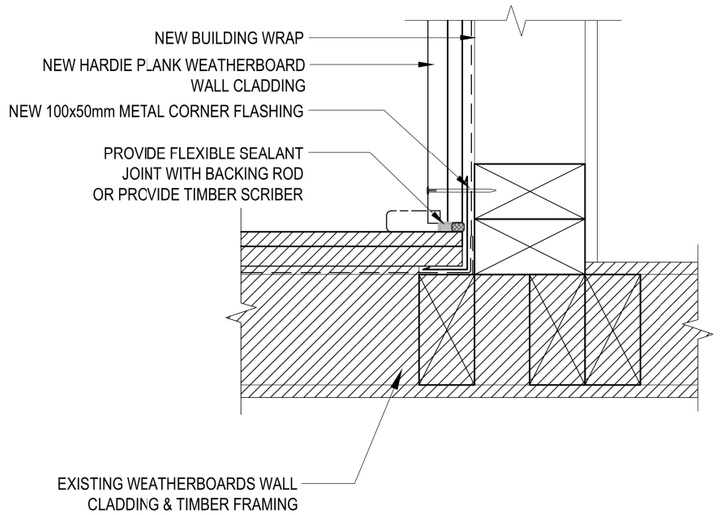

EXTERIOR

NEW AND EXISTING WALL CLADDING CONNECTION DETAIL

MR LAPUZ
ARCHITECTURAL DESIGN
85 Springvale Road, Wanganui, New Zealand
Tel: 06 3477447 * Mobile: 02102398523 * Email: mrlapuz@yahoo.com

Project	Wind Region	Wind Zone		Scale	Sheet No.
PROPOSED HOUSE ALTERATION FOR MR NOEL OLI 9 TUI PLACE, WHANGANUI	A	MEDIUM	WALL CLADDING CORNER CONNECTION DETAILS	NTS	14
	Earthquake Zone	Exposure Zone		Date 8 DEC 2022	
	2	C		Amendment 11 JAN 2023 WDC RFI	

RECEIVED 12/01/2023

Bcon22/0752 - WDC Approved Plans - 17/01/2023

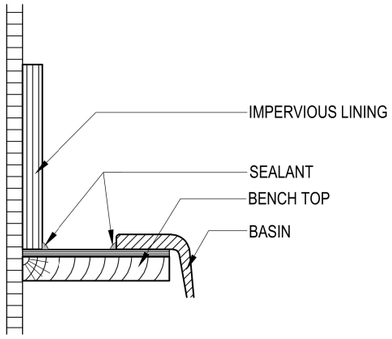

BASIN JOINT AGAINST WALL LINING

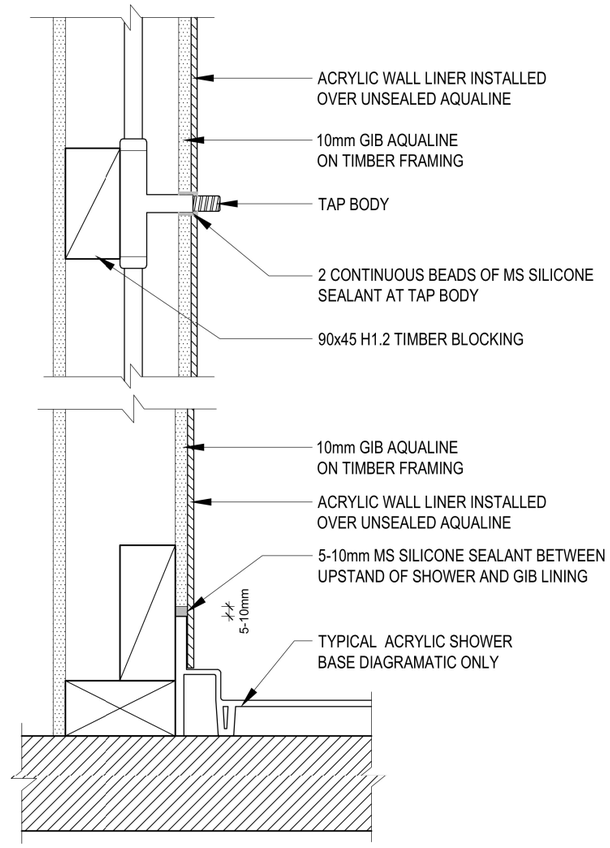

SHOWER UNITS TO WALL & FLOOR JUNCTION DETAILS

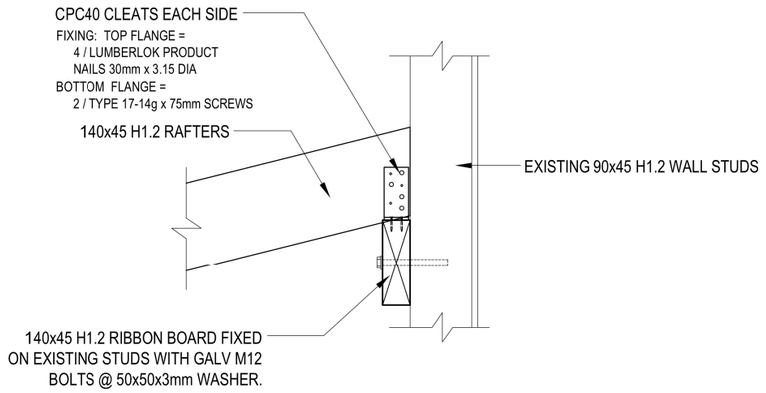

RIBBON BOARD TO STUDS CONNECTION DETAIL

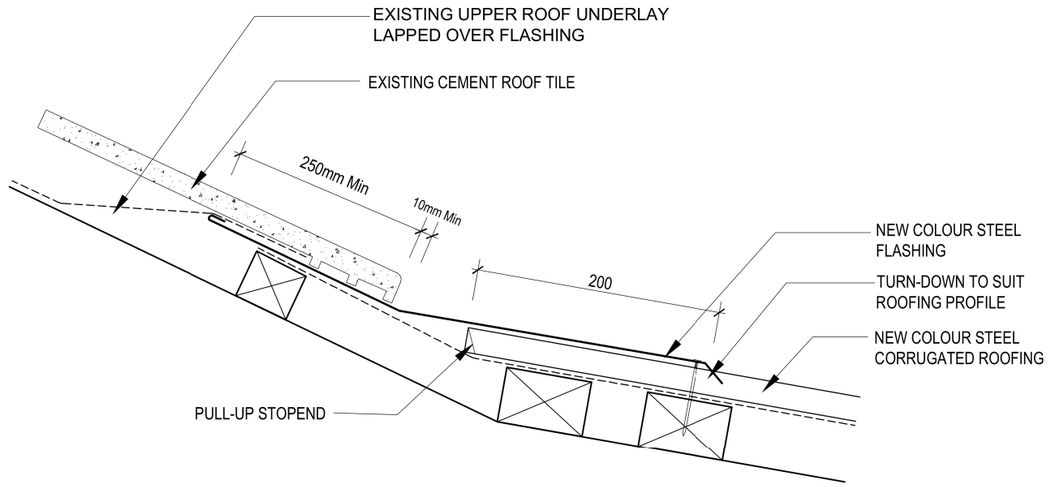

CHANGE IN PITCH DETAIL

M R LAPUZ
ARCHITECTURAL DESIGN
85 Springvale Road, Wanganui, New Zealand
Tel: 06 3477447 * Mobile: 02102398523 * Email: mrlapuz@yahoo.com

Project	Wind Region	Wind Zone		Scale	Sheet No.
PROPOSED HOUSE ALTERATION FOR MR NOEL OLI 9 TUI PLACE, WHANGANUI	A	MEDIUM	TYPICAL DETAILS	NTS	15
	Earthquake Zone	Exposure Zone		Date 8 DEC 2022	
	2	C		Amendment	

RECEIVED 12/12/2022

Bcon22/0752 - WDC Approved Plans - 17/01/2023

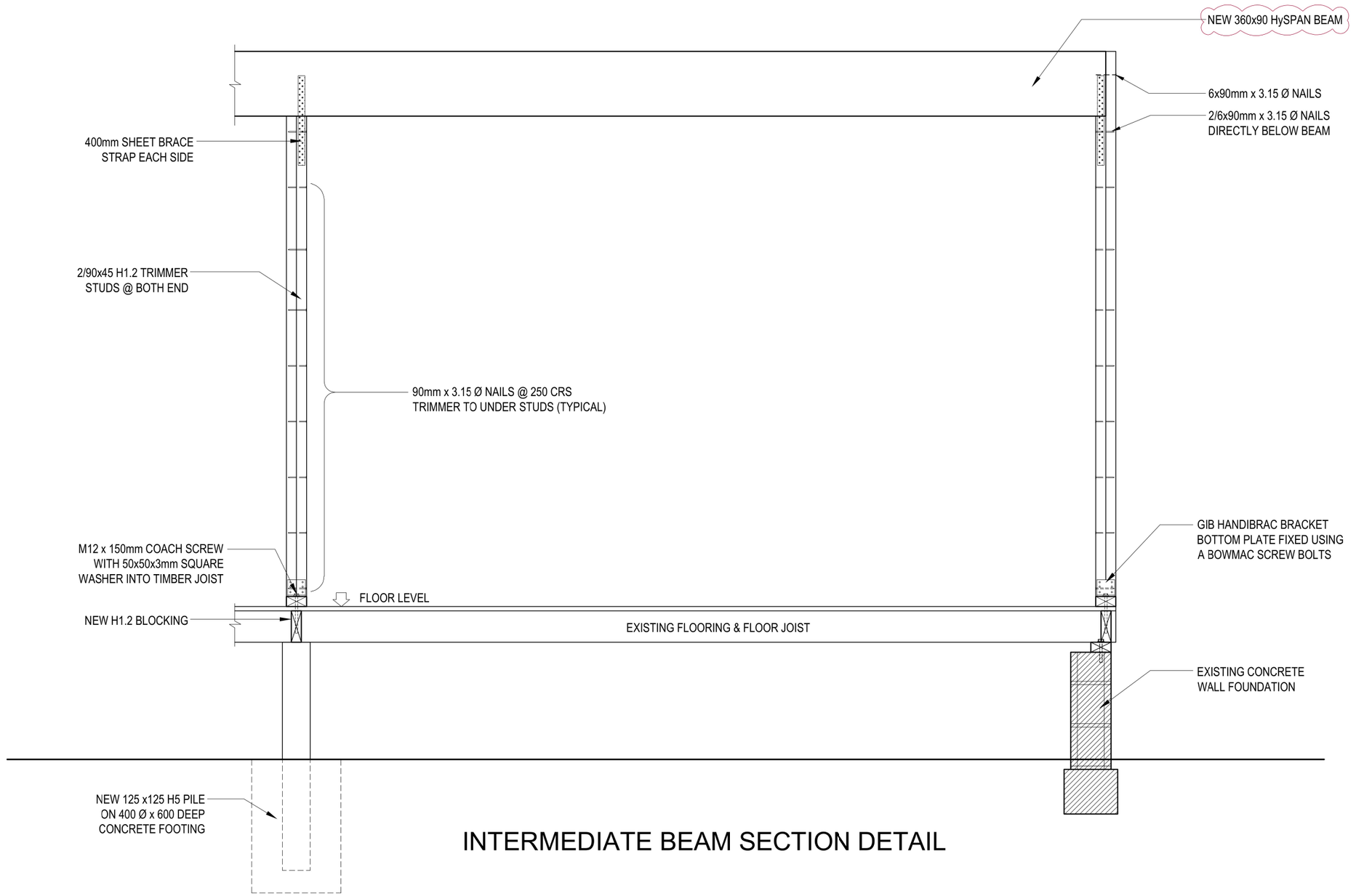

INTERMEDIATE BEAM SECTION DETAIL

RECEIVED 12/01/2023

MR LAPUZ
ARCHITECTURAL DESIGN
85 Springvale Road, Wanganui, New Zealand
Tel: 06 3477447 * Mobile: 02102398523 * Email: mrlapuz@yahoo.com

Project	Wind Region	Wind Zone		Scale	Sheet No.
PROPOSED HOUSE ALTERATION FOR MR NOEL OLI 9 TUI PLACE, WHANGANUI	A	MEDIUM	INTERMEDIATE BEAM SECTION DETAIL	NTS	16
	Earthquake Zone	Exposure Zone		Date	
	2	C		8 DEC 2022	
				Amendment	
				11 JAN 2023 WDC RFI	

Bcon22/0752 - WDC Approved Plans - 17/01/2023

GENERAL CLEARANCE

The following diagrams have been provided to assist determining where, and if a continuous flow water heater can be installed. If in doubt, consult a licensed gasfitter who will have access to the Gas Installation standards.

External models: General flue clearance

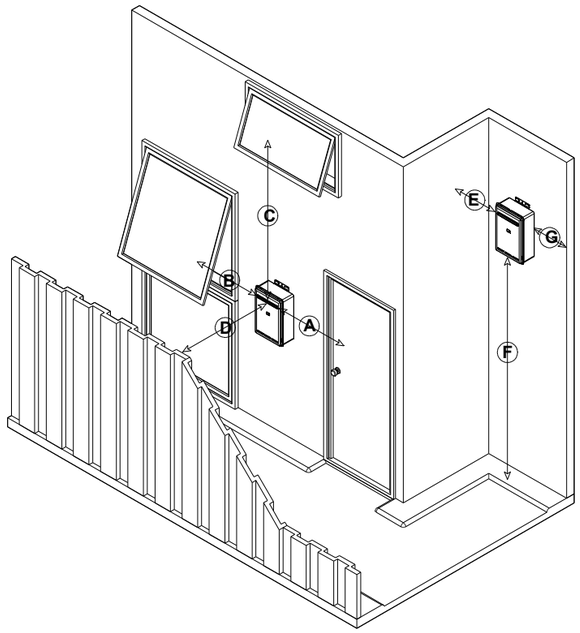

Dim	INFINITY A- SERIES, HD200, EF MODELS	INFINITY HD 250 MODEL
A	Min, 300 mm	Min, 500 mm
B	Min, 300 mm	Min, 500 mm
C	Min, 1.5 m	Min, 1.5 m
D	Min, 500 mm	Min, 500 mm
E	Min, 300 mm	Min. 300 mm
F	Min, 300 mm*	Min, 300 mm*
G	Min, 300 mm	Min, 300 mm

OTHER clearances
Below eaves, balconies, and others projections, minimum 300 mm.

From a gas meter, minimum 1000 mm.

From an electricity meter or fuse box, minimum 500 mm.

* Rinnai recommend1.65 m to give enough clearance for the pipe-work, and to safely expel flue gases.

Internal models: General flue clearance

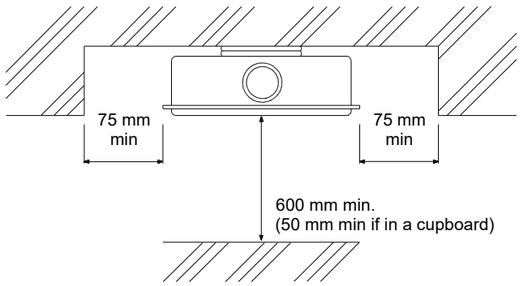

For internal units we recommend a 600 mm clearance for servicing access. This can be reduced to 50 mm if installed in a cupboard

OVERVIEW OF LPG CYLINDER CLEARANCE

The diagram below is a modified version of a drawing originally produced by ongas (www.ongas.co.nz). It is intended to provide an overview of the general clearances required for LPG cylinders.

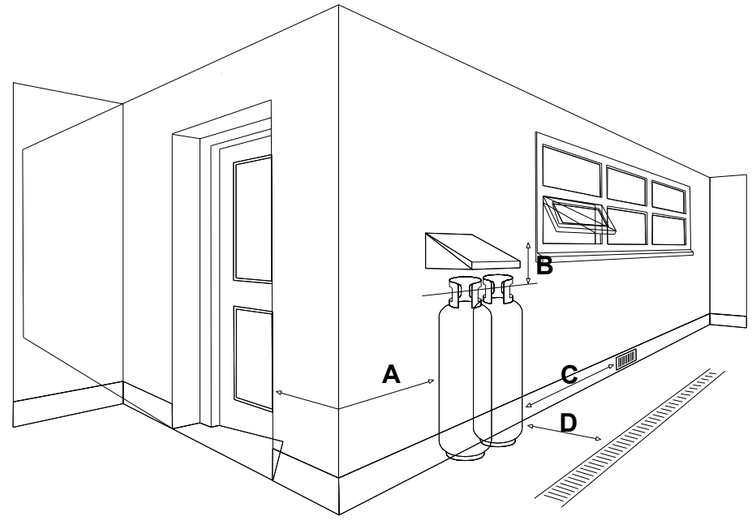

A	**Min. clearance to door**	**1m**
B	**Min. clearance to an openable window**	**150mm**
C	**Min. clearance to an air vent or opening**	**1m**
D	**Min. clearance to a drain**	**1m**

For detailed information relating to LPG cylinder placement it is advisable to consult a licensed gas fitter, your nearest LPG cylinder supplier, or consult AS/NZS 56011.1 Gas Installations.

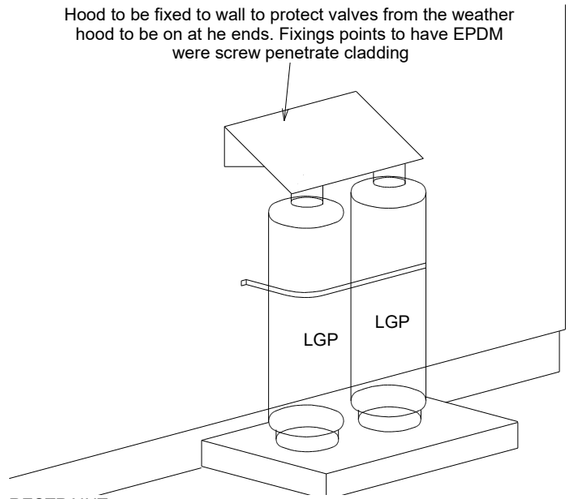

RESTRAINT
All cylinders larger than 25 litres (9kg) shall be secured against seismic activity using chains & brackets or similar.
The brackets shall be fastened to a wall or similar robust anchorage

MR LAPUZ
ARCHITECTURAL DESIGN
85 Springvale Road, Wanganui, New Zealand
Tel: 06 3477447 * Mobile: 02102398523 * Email: mrlapuz@yahoo.com

Project	Wind Region	Wind Zone		Scale	Sheet No.
PROPOSED HOUSE ALTERATION FOR MR NOEL OLI 9 TUI PLACE, WHANGANUI	A	MEDIUM	POSITION OF WATER HEATER & GAS BOTTLES	NTS	17
	Earthquake Zone	Exposure Zone		Date 8 DEC 2022	
	2	C		Amendment	

RECEIVED 12/12/2022

Bcon22/0752 - WDC Approved Plans - 17/01/2023

JamesHardie™

jameshardie.co.nz

Hardie™ Plank Weatherboard

Technical Specification

November 2021 New Zealand



RECEIVED 12/01/2023

Bcon22/0752 - WDC Approved Plans - 17/01/2023

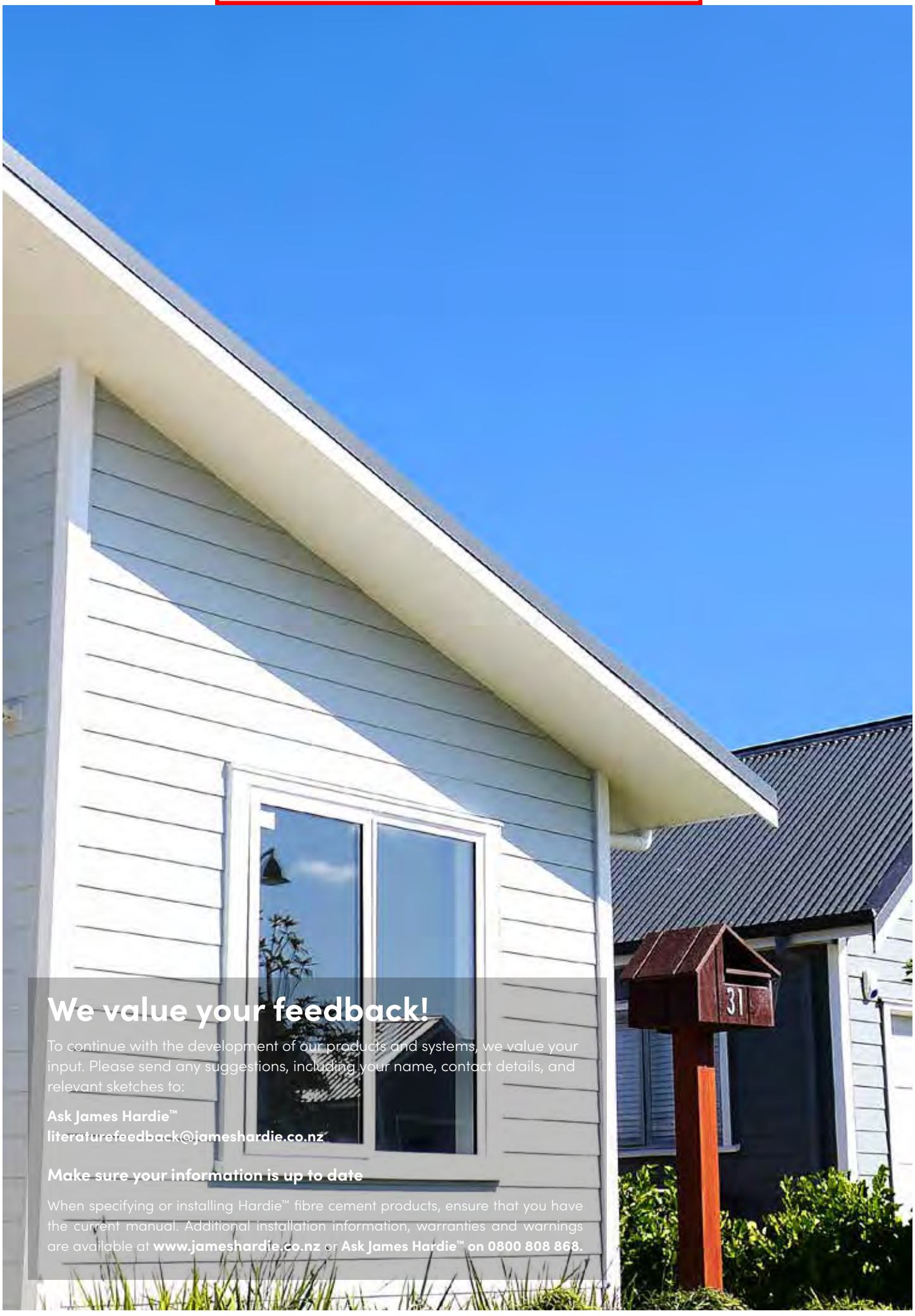

We value your feedback!

To continue with the development of our products and systems, we value your input. Please send any suggestions, including your name, contact details, and relevant sketches to:

Ask James Hardie™
literaturefeedback@jameshardie.co.nz

Make sure your information is up to date

When specifying or installing Hardie™ fibre cement products, ensure that you have the current manual. Additional installation information, warranties and warnings are available at **www.jameshardie.co.nz** or **Ask James Hardie™ on 0800 808 868.**

RECEIVED 12/01/2023

Bcon22/0752 - WDC Approved Plans - 17/01/2023

Contents

1 Application and Scope 4

1.1 Application 4
1.2 Scope 4
1.3 Details 4
1.4 Specific Design 4

2 Design 5

2.1 Compliance 5
2.2 Responsibility 5
2.3 Site and Foundation 5
2.4 Surface Clearances 5
2.5 Moisture Management 5
2.6 Structure 6
2.7 Wind Loading 6
2.8 Fire Rated Walls 6
2.9 Energy Efficiency 6

3 Framing 7

3.1 General 7
3.2 Structural Grade 7
3.3 Durability 7
3.4 Frame Construction 7
3.4.1 Direct Fix Construction Method 7
3.4.2 Cavity Construction Method 7
3.5 Tolerances 8

4 Preparation 8

4.1 HomeRAB™ Pre-Cladding or Flexible Underlay 8
4.2 RAB™ Board or a Rigid Air Barrier 8
4.3 Flashing 8
4.4 Vent Strip 9
4.5 Cavity Battens 9
4.6 Intermediate Support 9
4.7 Corners 9
4.8 External Corners 9
4.9 Internal Corners 9
4.10 Junctions and Penetrations 10

5 Fixing 10

5.1 General 10
5.2 Fastener Durability 10
5.3 Nail Sizes and Fixing Method 11
5.4 Gun Nailing 11

6 Jointing 12

7 Finishing 12

7.1 Preparation 12
7.2 Sealants 12
7.3 Painting 12

8 Care & Maintenance 13

9 Product information 13

9.1 Manufacturing and Classification 13
9.2 Durability 13
9.2.1 Resistance to Moisture/Rotting 13
9.2.2 Fire Performance 14
9.2.3 Alpine Regions 14
9.3 Product Sizes and Mass 14

10 Product Sizes 14

11 Safe Working Practices 15

11.1 Storage and delivery 17
11.2 Tips for safe and easy handling of Hardie™ Plank Weatherboards 18

12 Accessories 20

13 Details 22

Product Warranty 51

RECEIVED 12/01/2023

Bcon22/0752 - WDC Approved Plans - 17/01/2023

1 Application and Scope

1.1 Application

Hardie™ Plank Weatherboards are made of fibre cement. They are categorised as a lightweight cladding product as per NZS 3604.

Hardie™ Plank Weatherboard

Hardie™ Plank Weatherboard (7.5mm) is available in two widths (180mm and 300mm) and has a smooth finish.

Specifier

If you are a specifier or other responsible party for a project, ensure that the information in this document is appropriate for the application you are planning and that you undertake specific design and detailing for areas which fall outside the scope of these specifications.

Installer

If you are an installer ensure that you follow the design, moisture management principles, and associated details and material selection provided by the designer. All the details provided in this document must be read in conjunction with the specifier's specification.

Make sure your information is up to date

When specifying or installing Hardie™ fibre cement products, ensure you have the current manual.If you're not sure you do, or you need more information, visit www.jameshardie.co.nz or Ask James Hardie™ on 0800 808 868.

1.2 Scope

This specification covers the use of Hardie™ Plank Weatherboard for buildings that fall within the scope of the NZS 3604 and the NZBC Acceptable Solution 'E2/AS1', paragraph 1.1. The specification covers the use of Hardie™ Plank Weatherboard in both direct fixed and cavity construction methods. Please refer to 'E2/AS1' for further information regarding the selection of construction method for claddings.

1.3 Details

Various Hardie™ Plank Weatherboard details are provided in the Details section of this document. This specification and details in CAD file are also available to download from our website at www.jameshardie.co.nz.

1.4 Specific Design

For use of Hardie™ Plank Weatherboard outside the scope of this document, the architect, designer or engineer must undertake specific design. For advice on designs outside the scope of this specification, Ask James Hardie on 0800 808 868.

RECEIVED 12/01/2023

Bcon22/0752 - WDC Approved Plans - 17/01/2023

2 Design

2.1 Compliance

Hardie™ Plank Weatherboards comply with section 9.5.2 of 'E2/AS1'. Information contained in this document regarding the installation of Hardie™ Plank Weatherboards are aligned with 'E2/AS1' of the New Zealand Building Code (NZBC).

2.2 Responsibility

The specifier or other party responsible for the project must ensure that the information and details in this specification are appropriate for the intended application and that additional detailing is performed for specific design or any areas that fall outside the scope of this technical specification. For applications outside the scope of this literature and details which are not provided herein, the architect, designer or engineer must undertake specific design and it should be ensured that the intent of their design meets the requirements of the NZBC.

All dimensions shown are in millimetres unless noted otherwise. All New Zealand Standards referenced in this manual are current edition and must be complied with.

James Hardie conduct stringent quality checks to ensure that any product manufactured falls within our quality spectrum. It is the responsibility of the builder to ensure that the product meets aesthetic requirements before installation. James Hardie will not be responsible for rectifying obvious aesthetic surface variations following installation.

2.3 Site and Foundation

The site on which the building is situated must comply with the NZBC Acceptable Solution 'E2/AS1' 'Surface Water'. Foundation design must comply with the requirements of NZS 3604 'Timber-framed Buildings' or be as per specific engineering design. The grade of adjacent finished ground must slope away from the building to avoid the possibility of water accumulation in accordance with the NZBC requirements.

2.4 Surface Clearances

The clearance between the bottom edge of the cladding and paved/unpaved ground must comply with section 9.1.3 of E2/AS1. The finished floor level must also comply with these requirements. These clearances must be maintained throughout the life of the building.

Hardie™ Plank Weatherboard must overhang the bottom plate on a concrete slab by a minimum of 50mm, as required by NZS 3604.

Hardie™ Plank Weatherboard must have a minimum clearance of 100mm from paved ground and 175mm from unpaved ground.

On roofs and decks the minimum clearance must be 50mm.

Do not install external cladding such that it may remain in contact with water or ground.

2.5 Moisture Management

It is the responsibility of the specifier to identify moisture related risks associated with any particular building design.

Wall construction design must effectively manage moisture, considering both the interior and exterior environments of the building, particularly in buildings that have a higher risk of wind driven rain penetration or that are artificially heated or cooled.

RECEIVED 12/01/2023

Bcon22/0752 - WDC Approved Plans - 17/01/2023

Walls must include those provisions as required by the NZBC Acceptable Solution 'E2/AS1' 'External Moisture'. In addition all wall openings, penetrations, junctions, connections, window sills, heads and jambs must incorporate appropriate flashing for waterproofing. The other materials, components and installation methods used to manage moisture in the walls, must comply with the requirements of relevant standards and the NZBC. For further information in relation to designing for weathertightness, refer to the Building Research Association of New Zealand (BRANZ) and the Ministry of Business, Innovation and Employment (MBIE) updates on the following websites, respectively www.branz.co.nz and www.building.govt.nz.

2.6 Structure

Timber-framed buildings must be designed in accordance with NZS 3604 (Timber-framed buildings). When the framing is provided as per the specific engineering design, the framing stiffness must be equivalent to, or more than, the stiffness requirements of NZS 3604. For timber frame walls longer than 12m, it is best practice to allow for construction joints to allow movements generated due to timber shrinkage or deflections etc.

2.7 Wind Loading

Hardie™ Plank Weatherboards are suitable for use in all wind zones in New Zealand up to and including EH as defined in NZS 3604.

A specific design is required for all situations where a building falls in a specific engineering design (SED) wind zone.

2.8 Fire Rated Walls

Walls clad with Hardie™ Plank Weatherboard using a direct fix or cavity construction method can achieve fire ratings of up to 60/60/60 to comply with C/AS1 of the NZBC, when constructed in accordance with this literature, including the fire rated system requirements as specified in the Fire and Acoustic Design Manual by James Hardie. Refer to this design manual for further information about fire rated systems.

2.9 Energy Efficiency

External walls constructed as per this technical specification, using Hardie™ Plank Weatherboard cladding must use suitable bulk insulation to meet the minimum thermal insulation requirements as per Clause H1/AS1 'Energy Efficiency' of the NZBC.

RECEIVED 12/01/2023

Bcon22/0752 - WDC Approved Plans - 17/01/2023

3 Framing

3.1 General

This Hardie™ Plank Weatherboard technical specification is only suitable for timber-framed buildings. Other framing materials are outside the scope of this specification.

3.2 Structural Grade

Minimum timber grade selected for external wall framing must be in accordance with NZS 3604.

3.3 Durability

To comply with the NZBC requirements the external framing must be treated to a minimum H1.2 treatment. Refer to the NZBC Acceptable Solution B2/AS1 'Durability' for further information about the durability requirements.

For timber treatment information refer to NZS 3602 (Timber and Wood-Based Products for use in Buildings) and NZS 3640 (Chemical Preservation of Round and Sawn Timber) for minimum timber treatment selection and treatment requirements.

Also refer to framing manufacturer's literature for further guidance on timber selection. Framing must be protected from moisture at sites in accordance with the recommendations of framing manufacturer's.

Note: Refer to NZS 3602 for information about the allowable moisture contents in timber.

3.4 Frame Construction

All timber framing sizes and set-out must comply with NZS 3604 and stud, nogs/dwangs centres as required by this specification.

Use of timber framing must be in accordance with framing manufacturer's specifications.

In case of gable end trusses sitting on top plate of external wall frame, the frame size must be in accordance with truss design and specification supplied by the frame and truss manufacturer/supplier supported by independant design producer statement.

3.4.1 Direct Fix Construction Method

Buildings with a risk score of 1-6 calculated in accordance with the NZBC Solution 'E2/AS1' Table 2, Hardie™ Plank Weatherboard can be direct fixed.

The following framing must be provided for direct fixed construction method:

- Studs must be provided at 600mm centres maximum
- Nogs must be provided at 1200mm centres maximum
- Double studs will be required at internal corners for fixing weatherboards without drilling the weatherboard ends

3.4.2 Cavity Construction Method

Buildings with a risk score of 7-20 calculated in accordance with the NZBC Acceptable Solution 'E2/AS1' Table 2 requires Hardie™ Plank Weatherboard to be installed on a cavity.

RECEIVED 12/01/2023

Bcon22/0752 - WDC Approved Plans - 17/01/2023

The following framing must be provided for cavity construction method:

- When studs are at 600mm centres the nogs must be provided at 800mm centres maximum
- When studs are at 400mm centres the nogs may be provided at 1200mm centres maximum
- Double studs are required at internal corners
- Extra packers may be required at external corners

3.5 Tolerances

In order to achieve an acceptable wall finish, it is imperative that framing is straight and true.

Framing tolerances must comply with the requirements of NZS 3604.

4 Preparation

4.1 HomeRAB™ Pre-Cladding or Flexible Underlay

HomeRAB™ Pre-Cladding or flexible underlay must be provided as per the requirements of the NZBC Acceptable Solution 'E2/AS1' 'External Moisture' and NZS 3604.

The flexible underlays must comply with Table 23 of 'E2/AS1'. The flexible underlays must be fixed in accordance with 'E2/AS1', NZS 3604 and the underlay manufacturer's recommendations.

Walls which are not lined on the inside face (e.g. garage walls or gable ends) must include a rigid sheathing or an air barrier behind the cladding which complies with the requirements of the NZBC 'Acceptable Solution' 'E2/AS1'. HomeRAB™ Pre-Cladding is suitable for use in these applications. It must be installed in accordance with RAB™ Board & HomeRAB™ Pre-Cladding Installation Manual.

4.2 RAB™ Board or a Rigid Air Barrier

In EH wind zone or for specific design wind zone, a rigid air barrier ie RAB™ Board, must be used instead of flexible underlay. To achieve the temporary weathertightness using pre-cladding products from James Hardie, windows/doors must be installed with required flashing tapes and seals etc. Refer to RAB™ Board & HomeRAB™ Pre-Cladding installation manual for information regarding its installation and requirements to achieve temporary weathertightness. For other rigid air barriers please refer to that manufacturers technical specification.

4.3 Flashing

All wall openings, penetrations, intersections, connections, window sills, heads and jambs must be flashed prior to weatherboard installation. Please refer to moisture management requirements in Clause 2.5. The flexible underlays must be appropriately incorporated with penetration and junction flashings. Materials must be lapped in such a way that water tracks down to the exterior on the face of flexible underlay.

The selected flashing materials must comply with the durability requirements of Table 20 of Acceptable Solution 'E2/AS1'.

RECEIVED 12/01/2023

Bcon22/0752 - WDC Approved Plans - 17/01/2023

4.4 Vent Strip

The Hardie™ uPVC cavity vent strip has an opening area of 1000mm²/m length and must be installed at the bottom of all walls constructed using the drained and ventilated cavity construction method. It is important that the openings in the vent strip are kept clear and unobstructed to allow free drainage and ventilation of cavities.

4.5 Cavity Battens

The battens provide airspace between the frame and cladding and are considered a 'packer' only in this specification.

The timber battens must be minimum H3.1 treated in accordance with NZS 3640 (Chemical preservation of round and sawn timber) to comply with the durability requirements of B2/AS1.

Cavity battens must comply with 'E2/AS1' and

- Be minimum 18mm thick
- Be minimum as wide as the width of studs
- Be fixed by the cladding fixings to the main framing through the flexible underlay
- Until claddings are fixed the battens need only to be tacked to framing. Batten fixing is required temporarily to keep them straight on the wall during construction.

The cavity battens are installed as described below:

- Fix cavity battens to studs
- Battens must be fixed with 40 x 2.8mm galvanised nails at 800mm centres maximum

4.6 Intermediate Support

Where studs are at 600mm centres an intermediate means of restraining the flexible underlay and insulation from bulging into the cavity shall be installed. An acceptable method to achieve this is using one of the following options as per E2/AS1:

- Intermediate cavity batten between the studs
- 75mm galvanised mesh
- Polypropylene tape at 300mm centres fixed horizontally and drawn taut

No intermediate supports are required where

- Studs are at 400mm centres or
- Rigid air barriers instead of flexible underlays are used

4.7 Corners

Anticipated joist shrinkage must be allowed for in the design process. Do not run trims or aluminium extrusions continuously across solid floor joists. Trims or extrusions to be flashed to best trade practice at these locations.

4.8 External Corners

Hardie™ Plank Weatherboard shall be finished at external corners using aluminium corner mould, corner soakers or box corner. Refer to Figures 5, 6, 7, 19, 20 and 21.

4.9 Internal Corners

Hardie™ Plank Weatherboard shall be finished at internal corners using aluminium 'W' moulds. Refer to Figures 8, 9, 22 and 23.

RECEIVED 12/01/2023

Bcon22/0752 - WDC Approved Plans - 17/01/2023

4.10 Junctions and Penetrations

Refer to Clause 2.5 of this specification for moisture management requirements. All windows and doors must be detailed as per the requirements of this specification. James Hardie has developed the window details for Hardie™ Plank Weatherboard which meet the requirements of E2 'External Moisture' approved document of the NZBC. Refer to Figures 11 to 13 and Figures 25 to 33.

5 Fixing

5.1 General

The horizontal lap of Hardie™ Plank Weatherboard must be 30mm minimum. Hardie™ Plank Weatherboard must be kept dry and under cover whilst in storage prior to and during fixing.

Ends which are exposed such as internal corners or where sealant is applied to the boards must be primed prior to installation. Dust and loose material must be removed before priming.

An H3.1 treated timber cant strip must be provided to support the bottom board on the wall. Refer to Figures 3 and 17.

5.2 Fastener Durability

Fasteners must meet the durability requirements of the NZBC. NZS 3604 specifies requirements for fixing material to be used in relation to the exposure conditions and are summarised below in Table 1.

Table 1

Exposure conditions and nail selection prescribed by NZS 3604		
Zone	**Application**	
D (sea spray) and geothermal hot spots	General	Stainless steel 304/316
	Fire	
	Bracing	
C and B*	General	Hot dip galvanised **
	Fire	
	Bracing	

* Zone C areas where local knowledge dictates that increased durability is required, appropriate selection shall be made Microclimate conditions as detailed in NZS 3604, Paragraph 4.2.4 require SED.
**Hot dip galvanised must comply with AS/NZS 4680.

Also refer to the NZBC Acceptable Solution E2/AS1 Table 20 and 21 for information regarding the selection of suitable fixing materials and their compatibility with other materials.

RECEIVED 12/01/2023

Bcon22/0752 - WDC Approved Plans - 17/01/2023

5.3 Nail Sizes and Fixing Method

Hardie™ Plank Weatherboard must be fixed to studs with the types of nails specified in Table 2, in accordance with the following requirements:

- All nails must be driven flush with the board surface
- When fixing weatherboard at the ends, nail must be driven at a minimum distance of 20mm from the end
- For nails driven 50mm or closer from the end edges of Hardie™ Plank Weatherboard, holes must be pre-drilled using a 3mm titanium drill bit

Table 2

Nail requirements for Hardie™ Plank Weatherboard	
DIRECT FIXED TO FRAME	
Face nailing	
50 x 2.8mm Hardie™ Flex nails	Finish flush with the board surface
CAVITY CONSTRUCTION	
Face nailing over flexible underlay	
75 x 3.15mm Hardie™ Flex nails	Finish flush with the board surface
CAVITY CONSTRUCTION	
Face nailing over RAB Board or HomeRAB Pre-Cladding	
75 x 3.15mm Hardie™ Flex nails	Finish flush with the board surface

5.4 Gun Nailing

Hardie™ Plank Weatherboard can be gun-nailed for face nailing fixing methods. Nails must be finished flush with board surface.

Round head nails must be used and the size of these nails must comply with the requirements of Table 2.

Nails must be fired at a minimum distance of 50mm from the ends of boards. When gun nailing is used, double studs will be required.

Note: Do not use 'D' head nails.

RECEIVED 12/01/2023

Bcon22/0752 - WDC Approved Plans - 17/01/2023

6 Jointing

The ends of Hardie™ Plank Weatherboard are jointed off-stud using a back soaker. The joints may be located centrally between studs but no closer than 150mm from the studs. The joints must be staggered by 600mm minimum. Flexible silicone sealant must be used with back soakers for jointing. Refer to Figures 4 and 18.

7 Finishing

Protective coating of Hardie™ Plank Weatherboard is required in order to meet the durability requirements of the New Zealand Building Code.

7.1 Preparation

Remove any surface dirt, grime or other contaminants and ensure the Hardie™ Plank Weatherboard are dry before painting.

7.2 Sealants

All sealants must demonstrate the ability to meet the relevant requirements of the NZBC. Their application and usage must be in accordance with manufacturer's instructions. Sealants, if coated, must be compatible with the paint system.

7.3 Painting

All Hardie™ Plank Weatherboards are un-primed.

Hardie™ Plank Weatherboard must be painted within 90 days of installation. It is recommended to prime the Hardie™ Plank Weatherboard before the application of a coating system. All exposed faces, including the top edges under the sills and bottom edges of Hardie™ Plank Weatherboard and accessories must be finished with a quality exterior paint system complying with any of parts 7, 8, 9, and 10 of AS 3730.

Hardie™ Plank Weatherboard can be painted dark colours when installed with aluminium mouldings only.

When using uPVC corner moulds or flashings, the light reflective value of the colour used must be more than 40% as required under section 4.3.1 of 'E2/AS1'. Dark colours cause excessive movements and deteriorate the cladding performance.

For best aesthetic results a low sheen paint is recommended. Some environments require special coatings. Paint selection and specifications is dependant on the paint system chosen. Refer to the paint manufacturer.

RECEIVED 12/01/2023

Bcon22/0752 - WDC Approved Plans - 17/01/2023

8 Care & Maintenance

It is the responsibility of the specifier to determine normal maintenance requirements to comply with the NZBC Acceptable Solution B2/AS1.

The extent and nature of maintenance will depend on the geographical location and exposure of the building.

As a guide, it is recommended that basic normal maintenance tasks shall include but not be limited to:

- Washing down the exterior every 6-12 months using low pressure water and a brush, and every 3-4 months in extreme coastal conditions (such as high winds and sea spray)
- Clean out gutters, downpipes and overflow pipes as required
- Cut back vegetation and landscaping which is too close to or touching the Hardie™ Plank Weatherboard
- Re-applying exterior protective finishes. Always refer to the paint manufacturer for recoating requirements related to ongoing paint performance
- Maintaining the exterior envelope and connections including joints, penetrations, flashings and sealants
- The clearances between the bottom edge of the Hardie™ Plank Weatherboard and the ground must always be maintained.

RECEIVED 12/01/2023

9 Product information

9.1 Manufacturing and Classification

James Hardie is an ISO 9001 certified manufacturer. Hardie™ Plank Weatherboards are manufactured to meet the requirements of AS/NZS 2908.2: 2000 'Cellulose-Cement Products', Hardie™ Plank Weatherboards have a classification of Type A Category 3 in accordance with this standard.

The weatherboards are supplied un-primed. The ends are guillotine cut and top and bottom edges are square water-jet trimmed.

Hardie™ Plank Weatherboards are identified by the printing of the name at regular intervals on the back face.

9.2 Durability

Hardie™ Plank Weatherboard, when installed and maintained as per the technical specification, will meet the durability requirements for claddings as required in the NZBC Approved Document B2 'Durability'.

9.2.1 Resistance to Moisture/Rotting

Hardie™ Plank Weatherboard demonstrates resistance to permanent moisture induced deterioration (rotting) and has passed the following tests in accordance with AS/NZS 2908.2

Bcon22/0752 - WDC Approved Plans - 17/01/2023

- Heat Rain (Clause 6.5)
- Water Permeability (Clause 8.2.2)
- Warm Water (Clause 8.2.4)
- Soak Dry (Clause 8.2.5).

9.2.2 Fire Performance

Hardie™ Plank Weatherboards have been tested/assessed to AS/NZS 3837 and are suitable for use where non-combustible materials are specified.

9.2.3 Alpine Regions

In regions subject to freeze/thaw conditions, Hardie™ Plank Weatherboard must not be in direct contact with snow or ice build up for extended periods, e.g. external walls in alpine regions must be protected where snow drifts over winter is expected.

The Hardie™ Plank Weatherboards have been tested in accordance with AS/NZS 2908.2 Clause 8.2.3.

9.3 Product Sizes and Mass

Available sizes of Hardie™ Plank Weatherboard and their weights are given in Table 3. Hardie™ Plank Weatherboards are classified as a light weight wall cladding (not exceeding 30kg/m^2) in accordance with NZS 3604.

RECEIVED 12/01/2023

10 Product Sizes

Table 3

Product information									
					Coverage information				
Product	**Code**	**Length (mm)**	**Width (mm)**	**Thickness (mm)**	**Effective cover**	**No. of planks/ metre height**	**Mass kg/ lineal m (approx. at EMC)**	**Mass kg/m2 approx. at EMC)**	**Pallet weight kg (60/120 units/ pack)**
Smooth	**401663**	4200	180	7.5	150	6.7	2.4	16.0	600/1170
	400266	4200	300	7.5	270	3.6	3.6	12.9	950/1900

Note: All dimensions provided are based on nominal only and subject to manufacturing tolerances.
*The effective thickness of finished 7.5mm Hardie™ Plank Weatherboard on the wall at the lap is approx 17-19mm.

Bcon22/0752 - WDC Approved Plans - 17/01/2023

11 Safe Working Practices

WARNING - DO NOT BREATHE DUST AND CUT ONLY IN WELL VENTILATED AREA

Hardie™ fibre cement products contain sand, a source of respirable crystalline silica

May cause cancer if dust from product is inhaled. Causes damage to lungs and respiratory system through prolonged or repeated inhalation of dust from product.

Intact fibre cement products are not expected to result in any adverse toxic effects. The hazard associated with fibre cement arises from the respirable crystalline silica present in dust generated by activities such as cutting, rebating, drilling, routing, sawing, crushing, or otherwise abrading fibre cement, and when cleaning up, disposing of or moving dust.

When doing any of these activities in a manner that generates dust, follow James Hardie's instructions and best practices to reduce or limit the release of dust.

If using a dust mask or respirator, use an AS/NZS 1716 P1 filter and refer to Australian/New Zealand Standard 1715:2009 Selection, Use and Maintenance of Respiratory Protective Equipment for more extensive guidance and more options for selecting respirators for workplaces. For further information, refer to our installation instructions and Safety Data Sheets available at www.jameshardie.co.nz.

FAILURE TO ADHERE TO OUR WARNINGS, SAFETY DATA SHEETS, AND INSTALLATION INSTRUCTIONS MAY LEAD TO SERIOUS PERSONAL INJURY OR DEATH.

Crystalline Silica is

- Commonly known as sand or quartz
- Found in many building products e.g. concrete, bricks, grout, wallboard, ceramic tiles, and all fibre cement materials

Why is Crystalline Silica a health hazard?

- Silica can be breathed deep into the lungs when present in the air as a very fine (respirable) dust
- Exposure to silica dust without taking the appropriate safety measures to minimise the amount being breathed in, can lead to a potentially fatal lung disease – silicosis – and has also been linked with other diseases including cancer. Some studies suggest that smoking may increase these risks
- The most hazardous dust is the dust you cannot see!

When is Crystalline Silica a health hazard?

- It's dangerous to health if safety protocols to control dust are not followed when cutting, drilling or rebating a product containing crystalline silica and when cleaning up
- Products containing silica are harmless if intact (e.g. an un-cut sheet of wall board)

RECEIVED 12/01/2023

Bcon22/0752 - WDC Approved Plans - 17/01/2023

Avoid breathing in crystalline silica dust

Safe working practices

- ✕ NEVER use a power saw indoors or in a poorly ventilated area
- ✕ NEVER dry sweep
- ✓ ALWAYS use M Class or higher vacuum or damp down dust before sweeping up
- ✕ NEVER use grinders
- ✓ ALWAYS use a dust reducing circular saw equipped with a sawblade specifically designed to minimise dust creation when cutting fibre cement – preferably a sawblade that carries the Hardie™ Blade name or one with at least equivalent performance – connected to an M Class or higher vacuum
- ✓ Before cutting warn others in the area to avoid dust
- ✓ ALWAYS follow tool manufacturers' safety recommendations
- ✓ ALWAYS expose only the minimum required depth of blade for the thickness of fibre cement to be cut
- ✓ ALWAYS wear a properly-fitted, approved dust mask or respirator P1 or higher in accordance with applicable government regulations and manufacturer instructions
- ✓ Consider rotating personnel across cutting tasks to further limit respirable silica exposures.

Use one of the following methods for cutting Hardie™ Plank Weatherboard:

Best

- Hardie™ Knife
- Hand guillotine
- Fibreshear

Better

Dust reducing circular saw equipped with Hardie™ Blade Saw Blade and connected to a M Class or higher vacuum.

When cutting outdoors

- ✓ Make sure you work in a well ventilated area
- ✓ Position cutting station so wind will blow dust away from yourself and others in the working area
- ✓ Rotate employees across cutting task over duration of shift
- ✓ Cut products with a Hardie™ Blade Saw Blade (or equivalent) and a dust reducing circular saw connected to a M Class or higher vacuum
- ✓ When sawing, sanding, rebating, drilling or machining fibre cement products, always:
  - Wear your P1 or higher (correctly fitted in accordance with manufacturers' instructions), ask others to do the same.
  - Keep persons on site at least 2 metres and as far as practicable away from the cutting station while the saw is in operation
  - If you are not clean shaven, then use a powered air respirator with a loose fitting head top
  - Wear safety glasses
  - Wear hearing protection
- ✓ Make sure you clean up BUT never dry sweep. Always hose down with water/wet wipe or use an M Class or higher vacuum

When cutting indoors

- ✕ Never cut using a circular saw indoors
- ✓ Position cutting station in a well ventilated area

RECEIVED 12/01/2023

Bcon22/0752 - WDC Approved Plans - 17/01/2023

- ✓ Cut ONLY using a Hardie™ Knife, hand guillotine or fibreshears (manual, electric or pneumatic)
- ✓ Make sure you clean up BUT never dry sweep. Always hose down with water/wet wipe or use an M Class or higher vacuum

If concern still exists about exposure levels or you do not comply with the above practices, you should always consult a qualified industrial hygienist or contact James Hardie for further information.

Working instructions

Hardie™ Blade Saw Blade

The Hardie™ Blade Saw Blade used with a dust-reducing saw is ideal for fast, clean cutting of Hardie™ fibre cement products. A dust-reducing saw uses a dust collector connected to a M Class or higher vacuum. When sawing, clamp a straight edge to the sheet as a guide and run the saw base plate along the straight edge when making the cut.

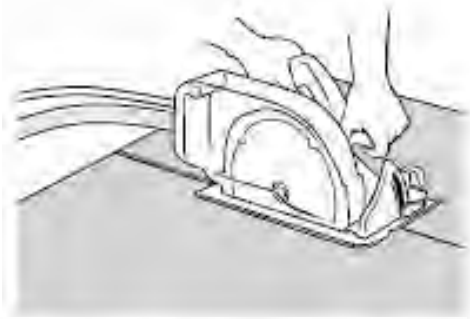



Hole forming

For smooth clean cut circular holes:

- Mark the centre of the hole on the sheet
- Pre-drill a 'pilot' hole
- Using the pilot hole as a guide, cut the hole to the appropriate diameter with a hole saw fitted to a heavy duty electric drill

For irregular holes:

- Small rectangular or circular holes can be cut by drilling a series of small holes around the perimeter of the hole then tapping out the waste piece from the sheet face
- Tap carefully to avoid damage to sheets, ensuring that the sheet edges are properly supported

11.1 Storage and delivery

Keeping products and people safe

Off loading

- ✓ Hardie™ fibre cement products should be off-loaded carefully by hand or by forklift
- ✓ Hardie™ fibre cement products should not be rolled or dumped off a truck during the delivery to the jobsite

Storage

Hardie™ fibre cement products should be stored:

- ✓ In their original packaging
- ✓ Under cover where possible or otherwise protected with a waterproof covering to keep products dry
- ✓ Off the ground – either on a pallet or adequately supported on timber or other spacers
- ✓ Flat so as to minimise bending

RECEIVED 12/01/2023

Bcon22/0752 - WDC Approved Plans - 17/01/2023

Hardie™ fibre cement products must not be stored:

- ✕ Directly on the ground
- ✕ In the open air exposed to the elements

James Hardie is not responsible for damage due to improper storage and handling.

11.2 Tips for safe and easy handling of Hardie™ Plank Weatherboard

- ✓ Carry with two people
- ✓ Hold near each end and on edge
- ✓ Exercise care when handling sheet products to avoid damaging the edges/corners

RECEIVED 12/01/2023

Bcon22/0752 - WDC Approved Plans - 17/01/2023

12 Accessories

Table 4

Accessories/tools supplied by James Hardie for Hardie™ Plank Weatherboard				
	Accessory and material number		**Size (mm)**	**Material/appearance**
	External Corner Soaker - 310 - 180	 **303930** **303932**	 310 180	Etch Primed Aluminium Self colour
	Concealed Back Soaker - 310 - 180	 **303933** **303936**	 310 180	Etch Primed Aluminium Self colour
	External Corner (box) Mould - 3000 - 2700	 **300380** **300378**	 3000 2700	Etch Primed Aluminium
	External Corner Mould 135º - 2700	 **300375**	 2700	Etch Primed Aluminium
	Internal Corner Mould 135º - 2700	 **300383**	 2700 long	Etch Primed Aluminium
	Corner Underflashing - 50 x 50	**303745**	3000 long	uPVC
	Vent Strip	**302490**	3000 long	PVC White
	Internal 'W' Corner - 2700	**300386**	2700 long	Etch Primed Aluminium
	Hardie™ Flex nail - 5kg	**304253**	75 x 3.15mm	316 Stainless Steel
	Hardie™ Flex nail - 5kg	**304251**	75 x 3.15mm	Hot Dip Galvanised
	**Hardie™ Blade Saw Blade** Diamond tip fibre cement circular saw blade. Spacers not included.	**300660**	184mm	Diamond Tipped
	**Hardie™ Blade Saw Blade** Diamond tip fibre cement circular saw blade. Spacers not included.	**303375**	254mm	Diamond Tipped
	**Hardie™ Knife** Scoring tool for easy cutting.	**305926**		

RECEIVED 12/01/2023

Bcon22/0752 - WDC Approved Plans - 17/01/2023

Table 5

Accessories/tools not supplied by James Hardie for Hardie™ Plank Weatherboard

James Hardie recommends the following products for use in conjunction with its Hardie™ Plank Weatherboard. James Hardie does not supply these products. Please contact component manufacturer for information on their warranties and further information on their products.

	Accessory and material number	Size (mm)	Material/ appearance
	Hardie™ Flex nail	40 x 2.8mm and 50 x 2.8mm	316 Stainless Steel
	Hardie™ Flex nail	40 x 2.8mm and 50 x 2.8mm	Hot Dip Galvanised
	Flexible sealant ie: Sikaflex® AT Facade	Tube	Cured rubberised compound
	PEF Rod Sika® Boom or similar	Polyethylene foam	Semi rigid foam
	Flashing Tape Tyvek®, Protecto® Wrap or similar	Proprietary tape to adhere to flexible underlay	
	Flashing to Table 20 'E2/AS1'	Refer Figure 13	Flashing fabricator
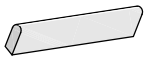	Timber Scriber	As required	H3.1 Treated Timber. Timber merchant or cut on site
	Cant Strip Redway Developments 03 358 5775	To suit cavity only	uPVC

RECEIVED 12/01/2023

Bcon22/0752 - WDC Approved Plans - 17/01/2023

13 Details

Various details outlined in the following table are available on Pages 22 to 49.

Table 6

Details				
DESCRIPTION	**DIRECT FIXED**		**CAVITY CONSTRUCTION**	
	FIGURE	**PAGE**	**FIGURE**	**PAGE**
Framing Setout	Figure 1	22		
Sheet Fixing Setout	Figure 2	23	Figure 16	33
Concrete Footing	Figure 3	24	Figure 17	34
Weatherboard Fixing	Figure 4	25	Figure 18	35
Aluminium Box Corner	Figure 5	26	Figure 19	36
External Boxed Corner	Figure 6	26	Figure 20	36
External Corner Soaker	Figure 7	27	Figure 21	37
Internal 90º Aluminium 'W' Mould	Figure 8	27	Figure 22	38
Internal 135º Aluminium 'W' Mould	Figure 9	28	Figure 23	39
Soffit Detail	Figure 10	28	Figure 24	39
Sill Flashings without Facings	Figure 11	29	Figure 25	40
One Piece Head Flashing without Facings	Figure 12	29	Figure 26	40
Jamb Flashing without Facings	Figure 13	30	Figure 27	41
Batten Setout			Figure 14 & 31	31 and 44
Cavity Sill with facings			Figure 28	41
Cavity One piece head flashing with facing			Figure 29	42
Cavity jamb flashing with facing			Figure 30	43
Batten Fixing			Figure 15	32
Parapet Flashing			Figure 32	44
Meter Box at Head			Figure 33	45
Meter Box at Sill			Figure 34	46
Meter Box at Jamb			Figure 35	47
Pipe Penetration			Figure 36	48
One Piece Apron Flashing Joint			Figure 37	49
Garage head as per Linea Cavity	Figure 38	50		
Garage jamb as per Linea Cavity	Figure 39	51		

RECEIVED 12/01/2023

Bcon22/0752 - WDC Approved Plans - 17/01/2023

Figure 1: Direct fix framing setout

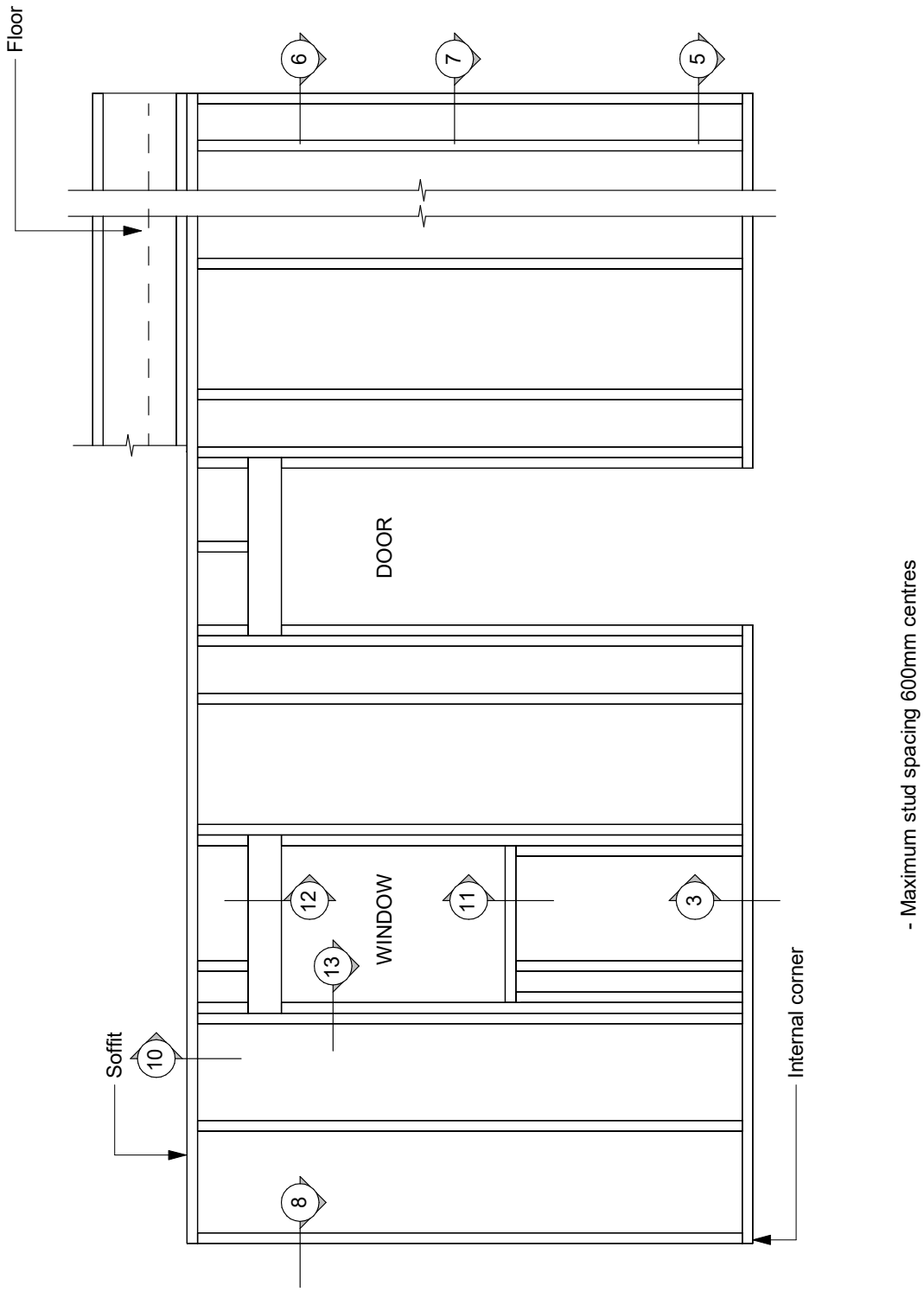

RECEIVED 12/01/2023

Bcon22/0752 - WDC Approved Plans - 17/01/2023

Figure 2: Direct fix sheet fixing setout

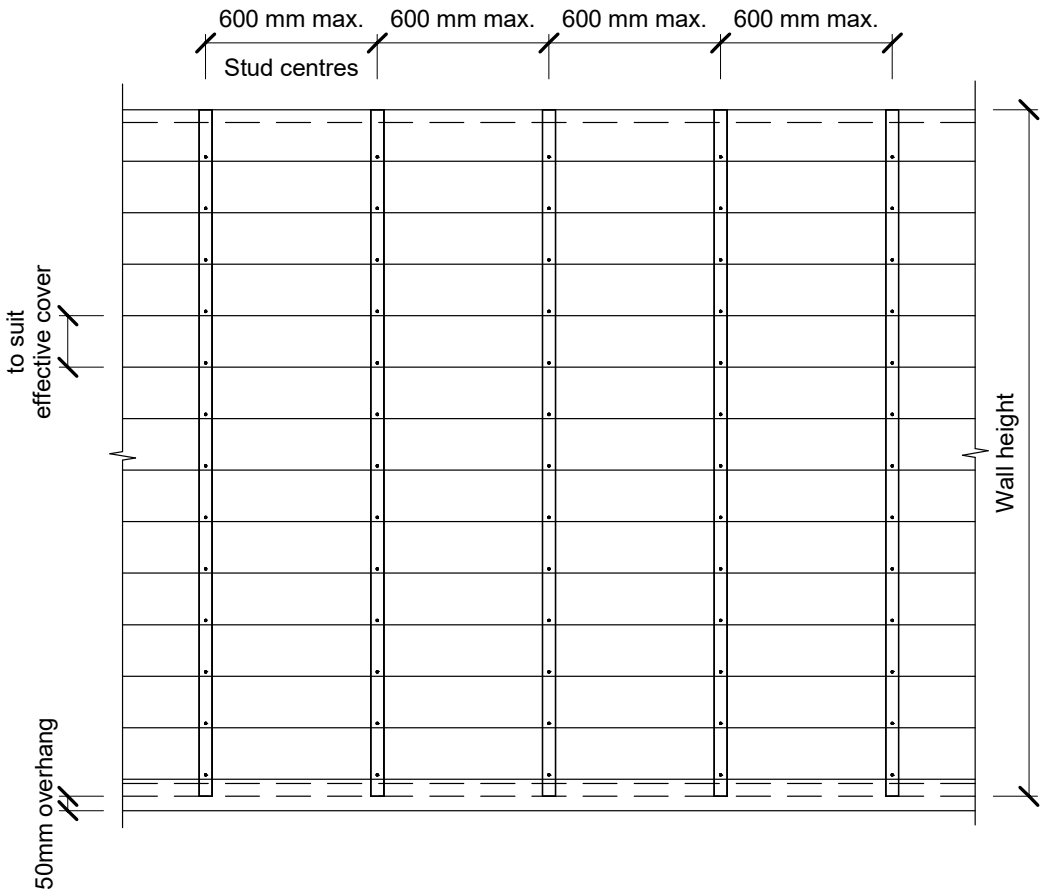

RECEIVED 12/01/2023

Bcon22/0752 - WDC Approved Plans - 17/01/2023

Figure 3: Direct fix concrete footing

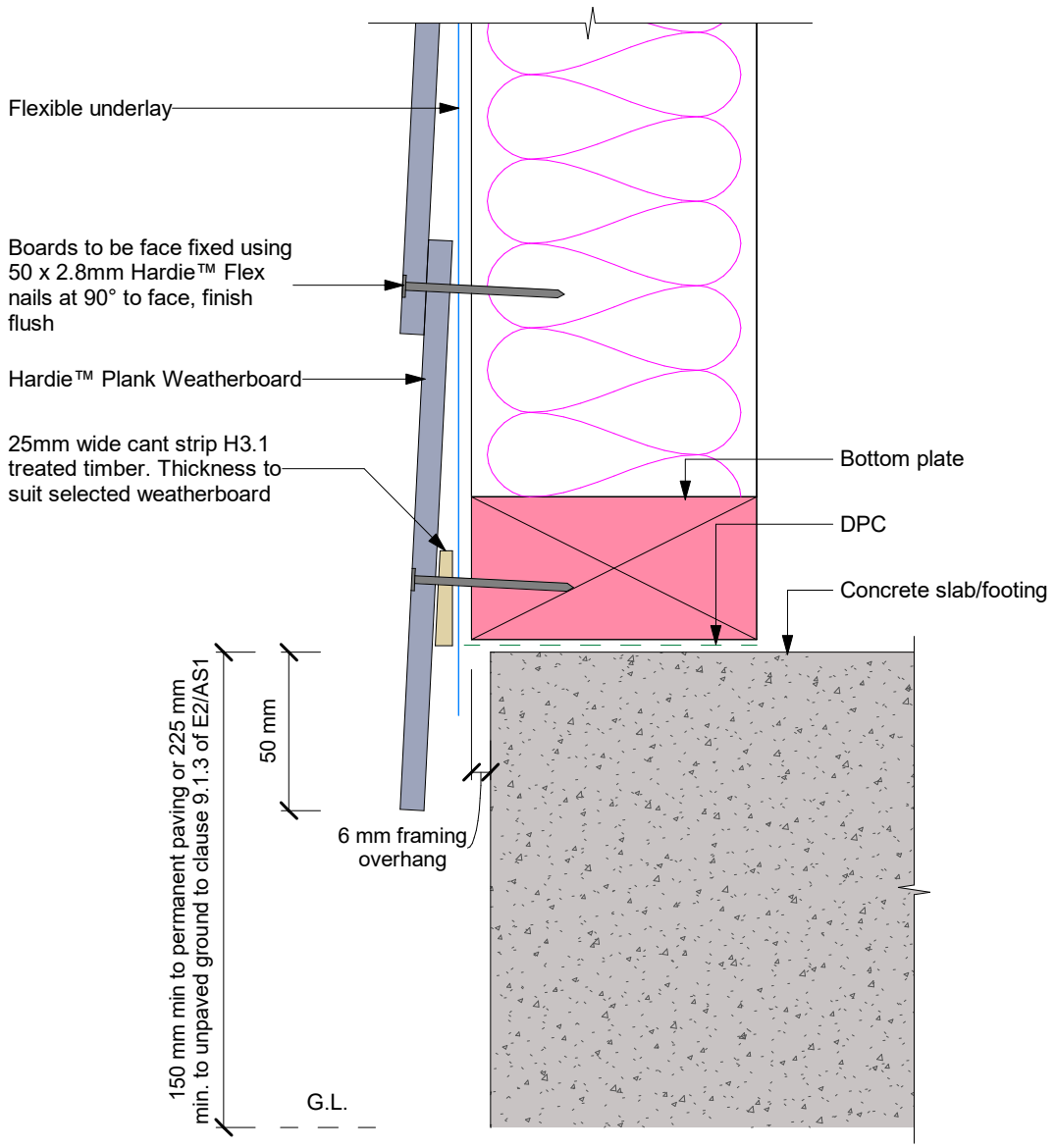

RECEIVED 12/01/2023

Bcon22/0752 - WDC Approved Plans - 17/01/2023

Figure 4: Direct fix weatherboard fixing

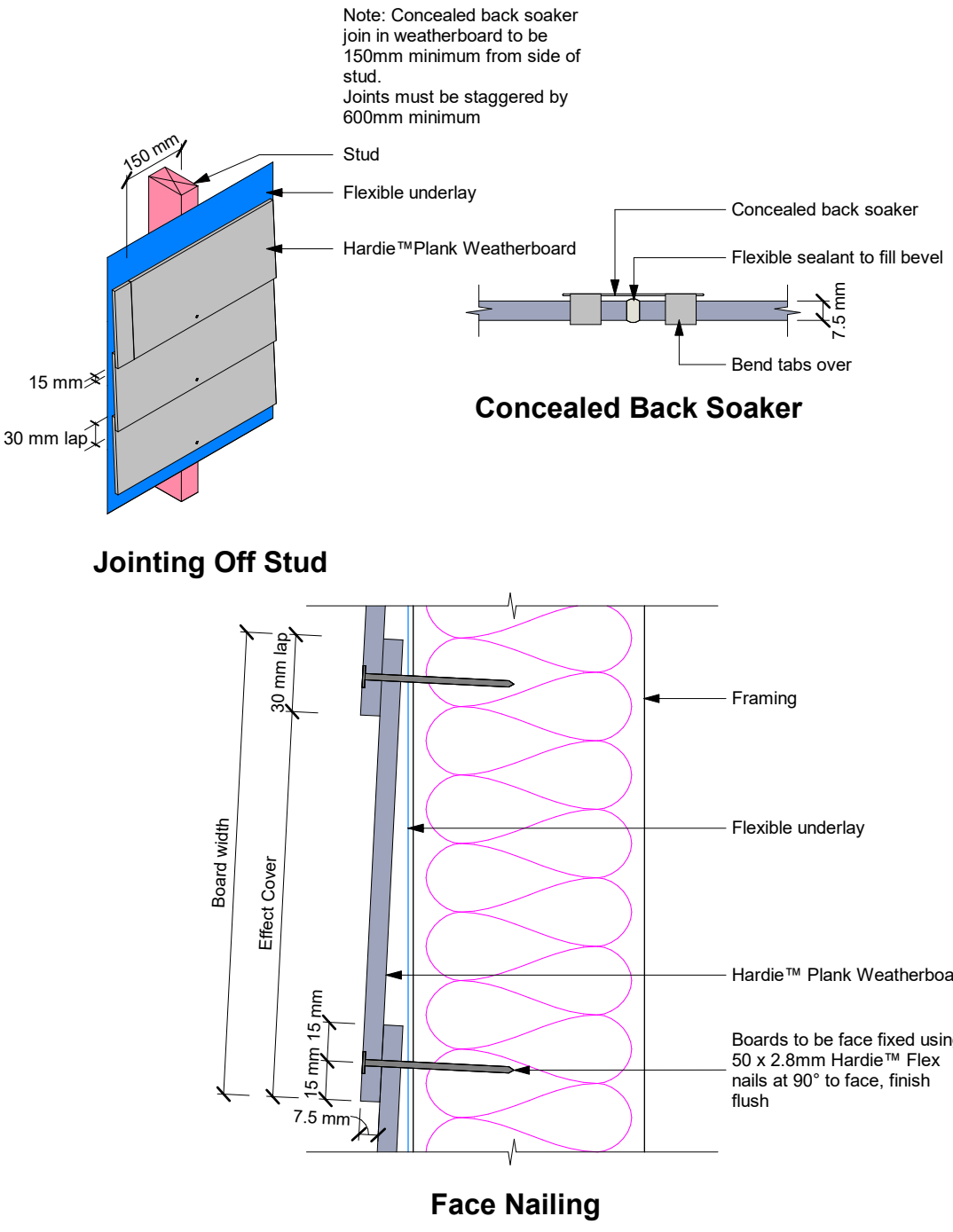

RECEIVED 12/01/2023

Bcon22/0752 - WDC Approved Plans - 17/01/2023

Figure 5: Direct fix aluminium box corner

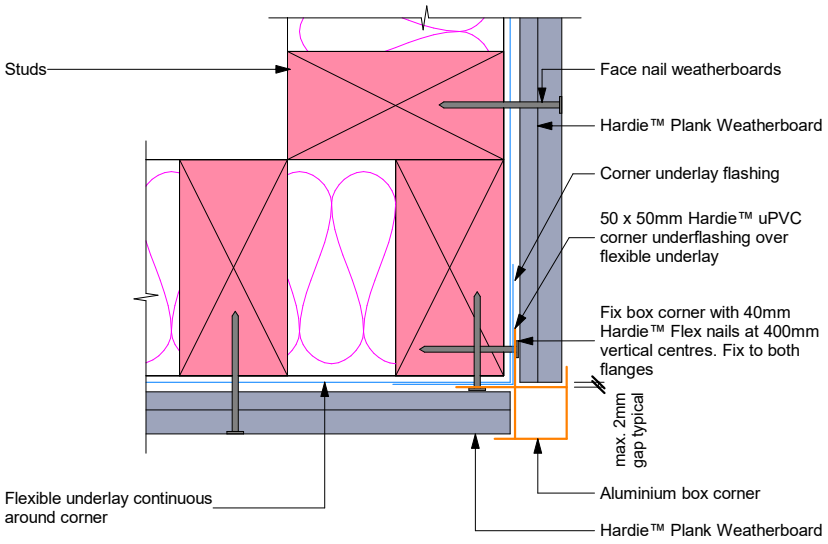

Figure 6: Direct fix external boxed corner

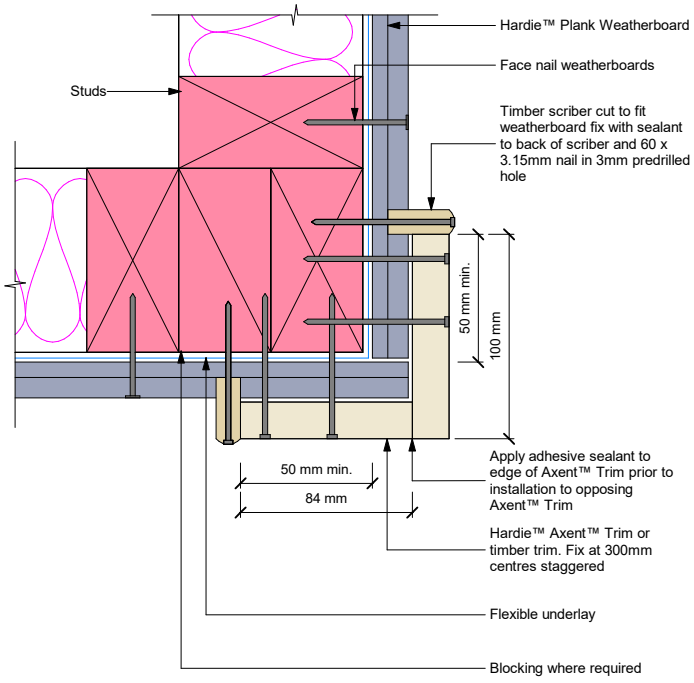

RECEIVED 12/01/2023

Bcon22/0752 - WDC Approved Plans - 17/01/2023

Figure 7: Direct fix external corner soaker

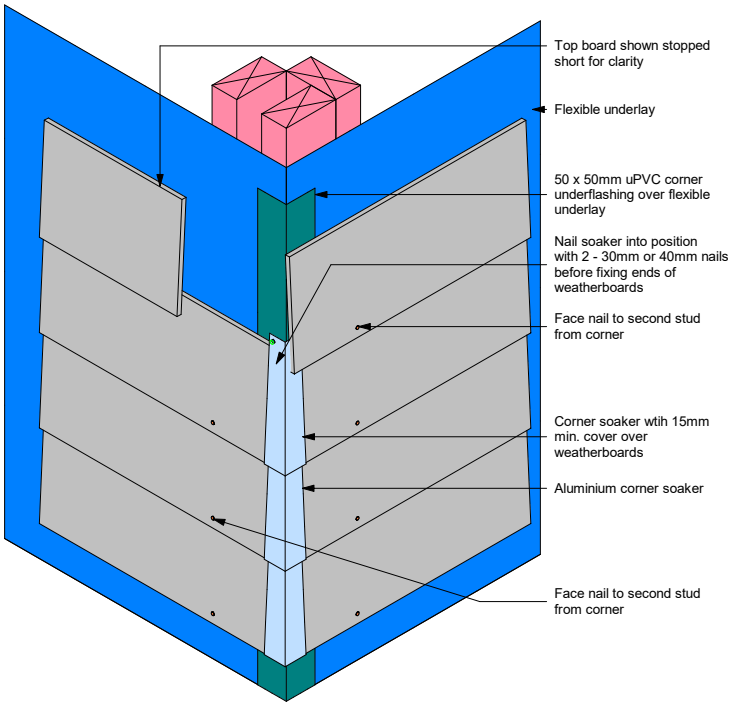

Figure 8: Direct fix internal 90º aluminium 'W' mould

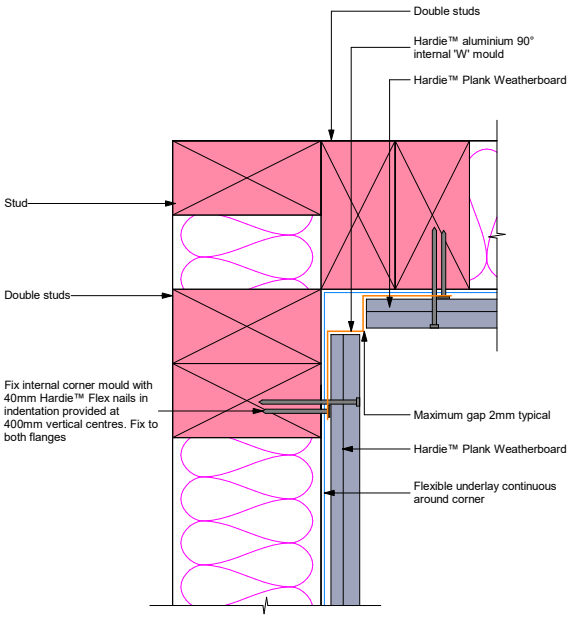

RECEIVED 12/01/2023

Bcon22/0752 - WDC Approved Plans - 17/01/2023

Figure 9: Direct fix internal 135º aluminium 'W' mould

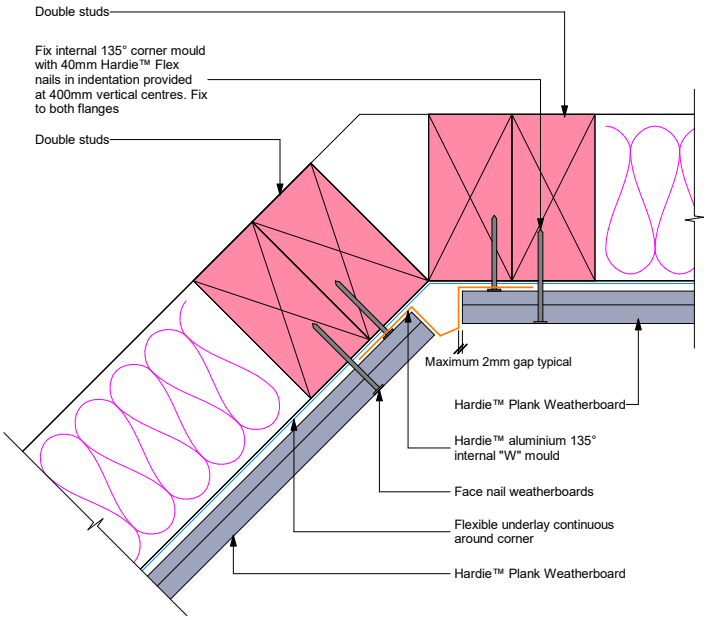

Figure 10: Direct fix soffit detail

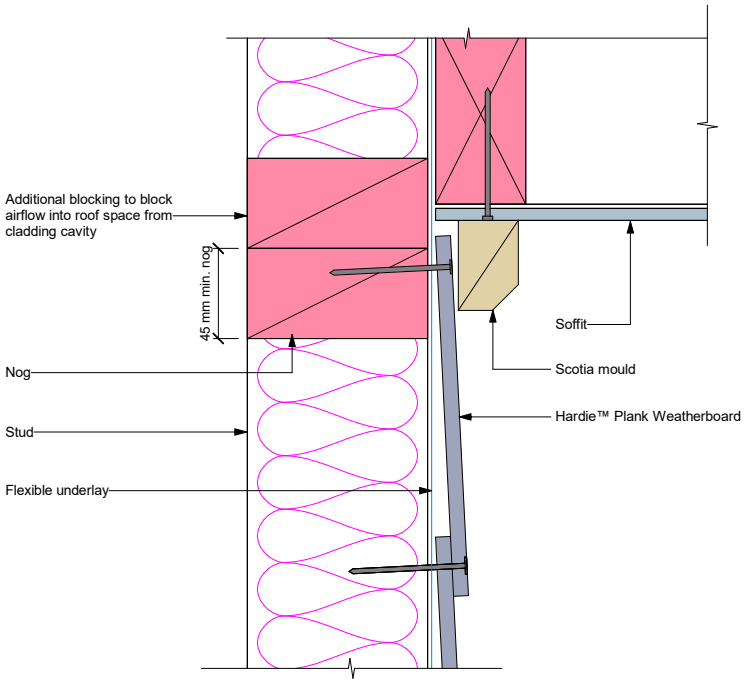

RECEIVED 12/01/2023

Bcon22/0752 - WDC Approved Plans - 17/01/2023

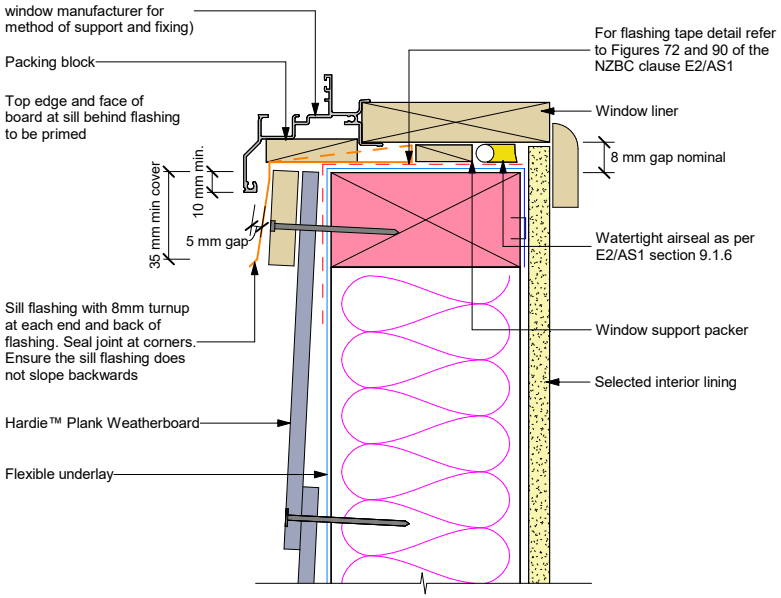

General note for materials selection

Flashing materials must be selected based on environmental exposure, refer to NZS 3604 and Table 20 of theNZBC E2/AS1

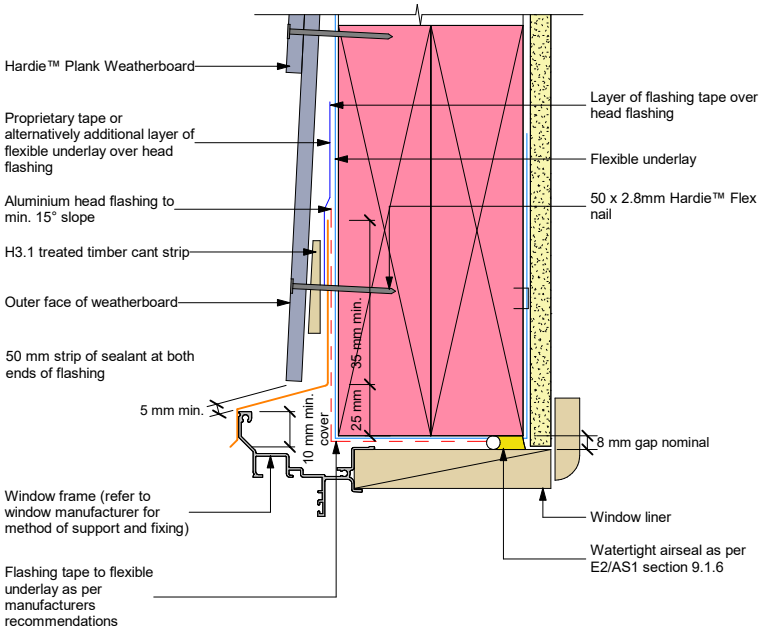

Note:
Sealant between head flashing and window flange in VH and EH wind zones. Refer Figure 71 of E2/AS1

RECEIVED 12/01/2023

Bcon22/0752 - WDC Approved Plans - 17/01/2023

Figure 13: Direct fix jamb flashing without facings

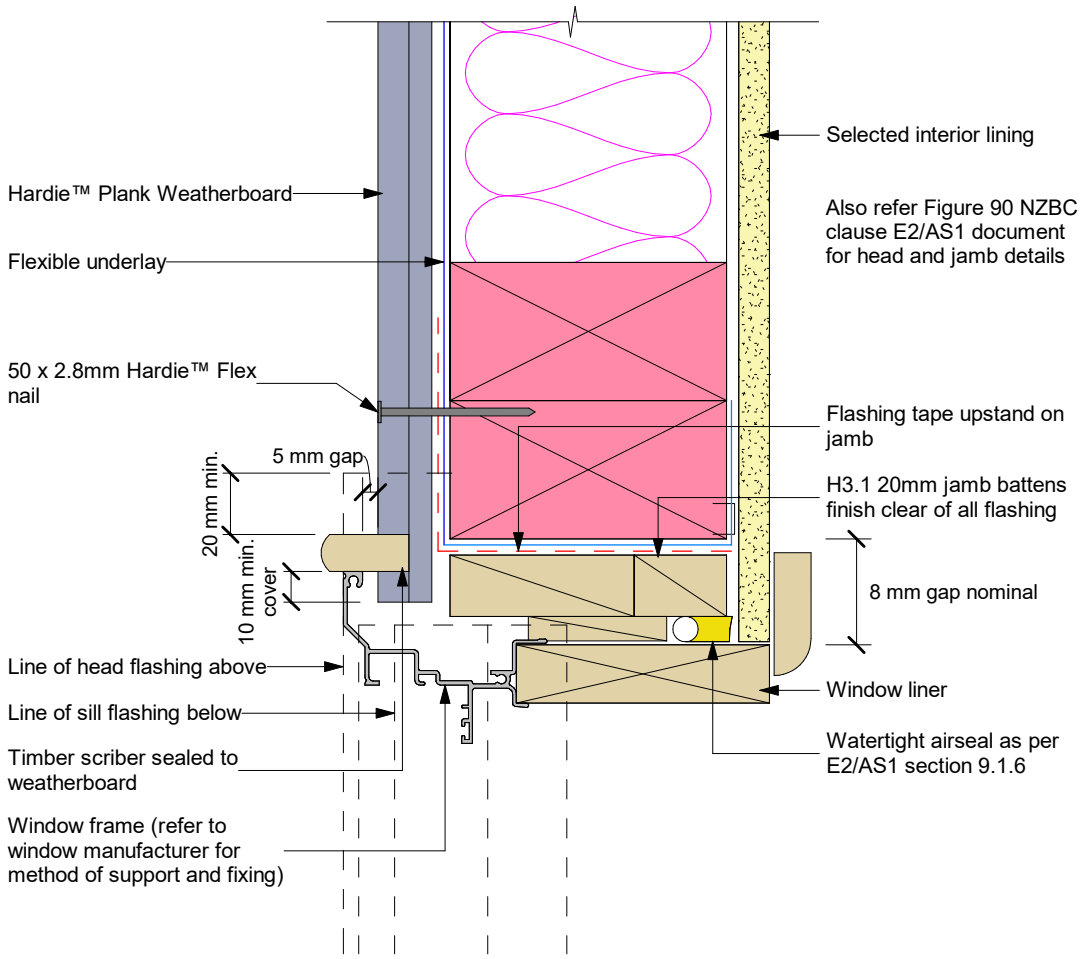

RECEIVED 12/01/2023

Bcon22/0752 - WDC Approved Plans - 17/01/2023

Figure 14: Cavity framing and batten setout

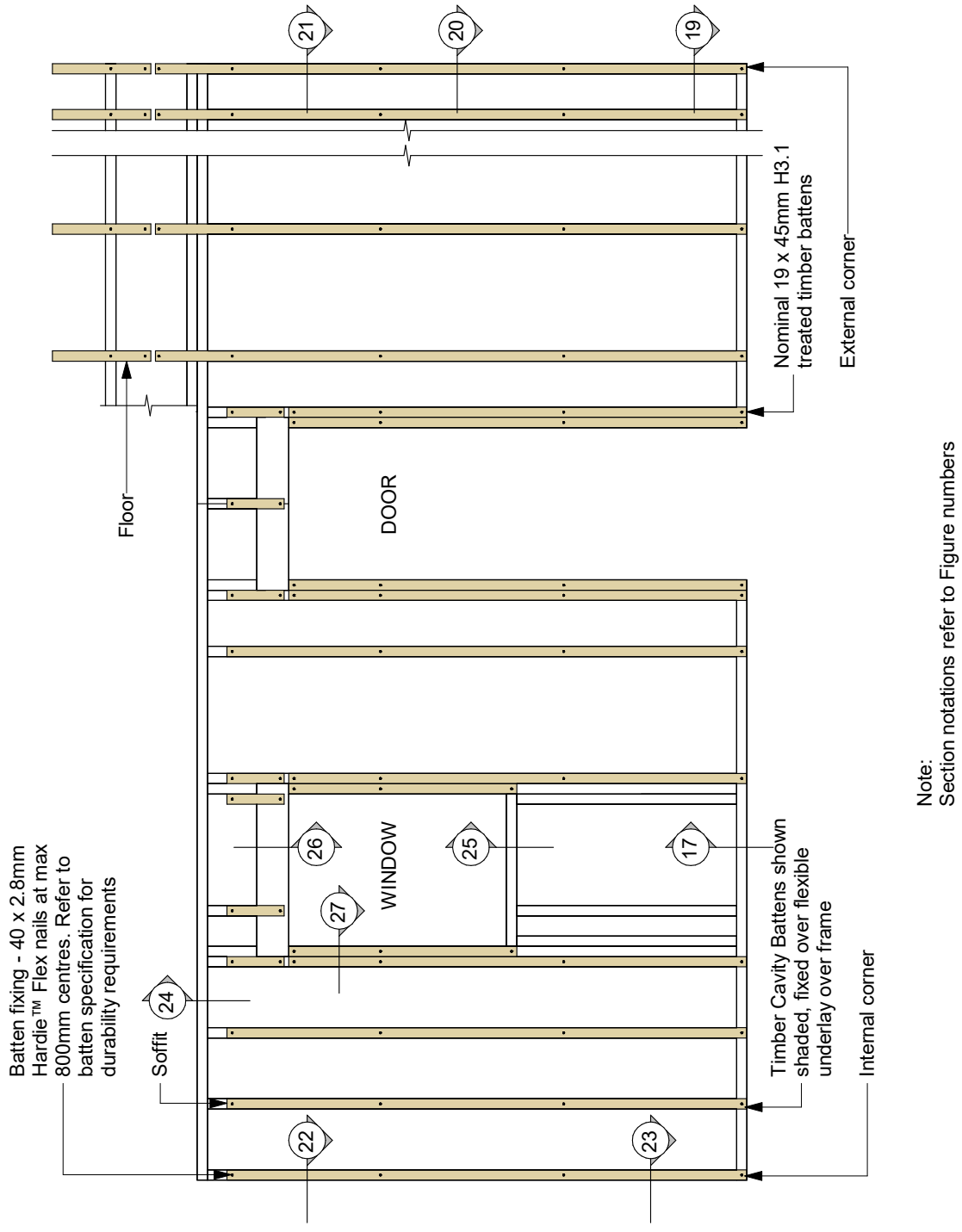

RECEIVED 12/01/2023

Bcon22/0752 - WDC Approved Plans - 17/01/2023

Figure 15: Cavity framing batten fixing

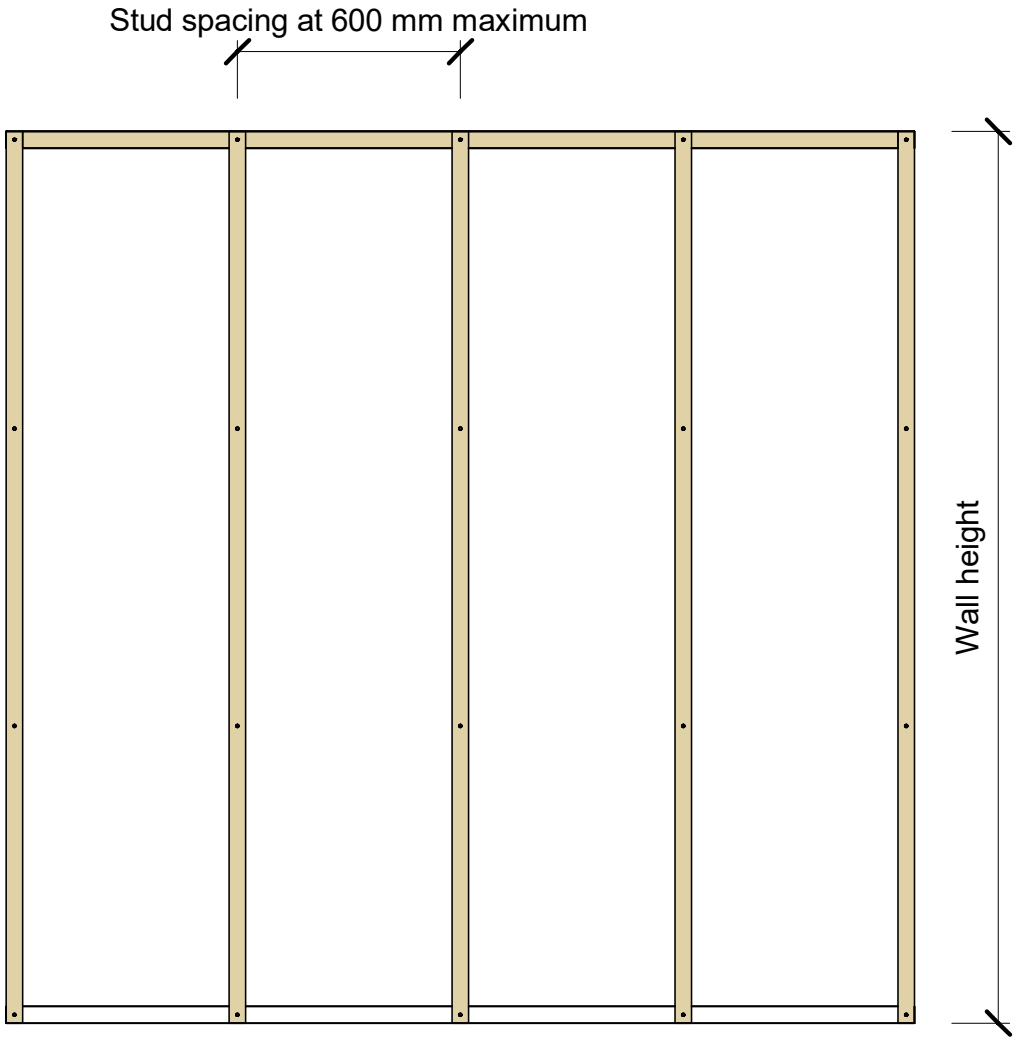

RECEIVED 12/01/2023

Bcon22/0752 - WDC Approved Plans - 17/01/2023

Figure 16: Cavity weatherboard fixing setout

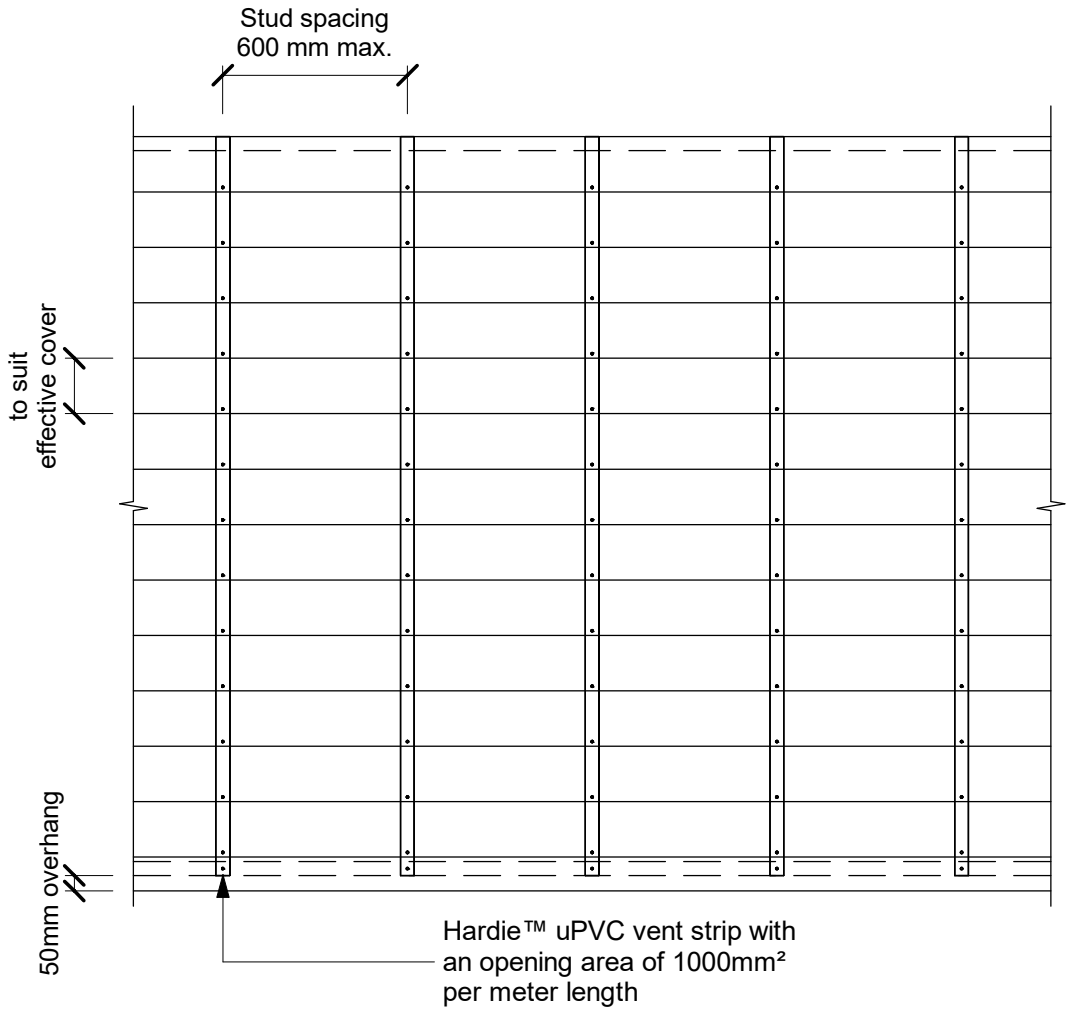

RECEIVED 12/01/2023

Bcon22/0752 - WDC Approved Plans - 17/01/2023

Figure 17: Cavity concrete footing

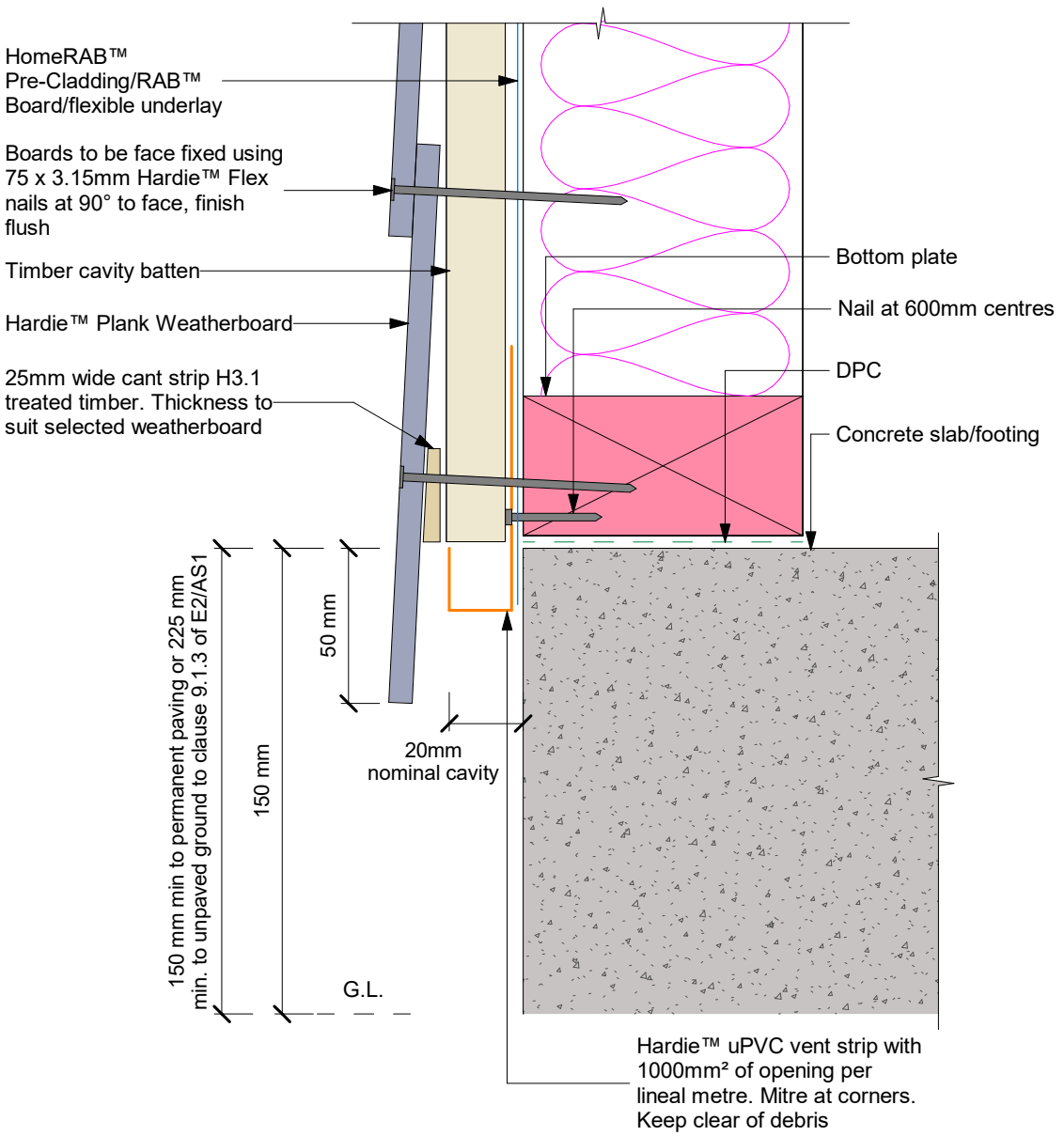

RECEIVED 12/01/2023

Bcon22/0752 - WDC Approved Plans - 17/01/2023

Note: Concealed back soaker join in weatherboard to be 150mm minimum from side of stud.
Joints must be staggered by 600mm minimum

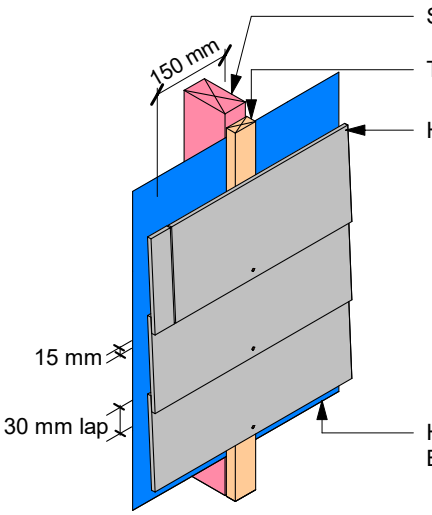

Joining Off Stud

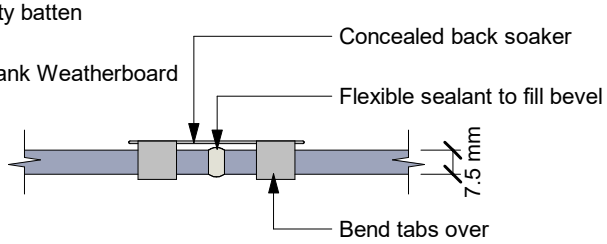

Concealed Back Soaker

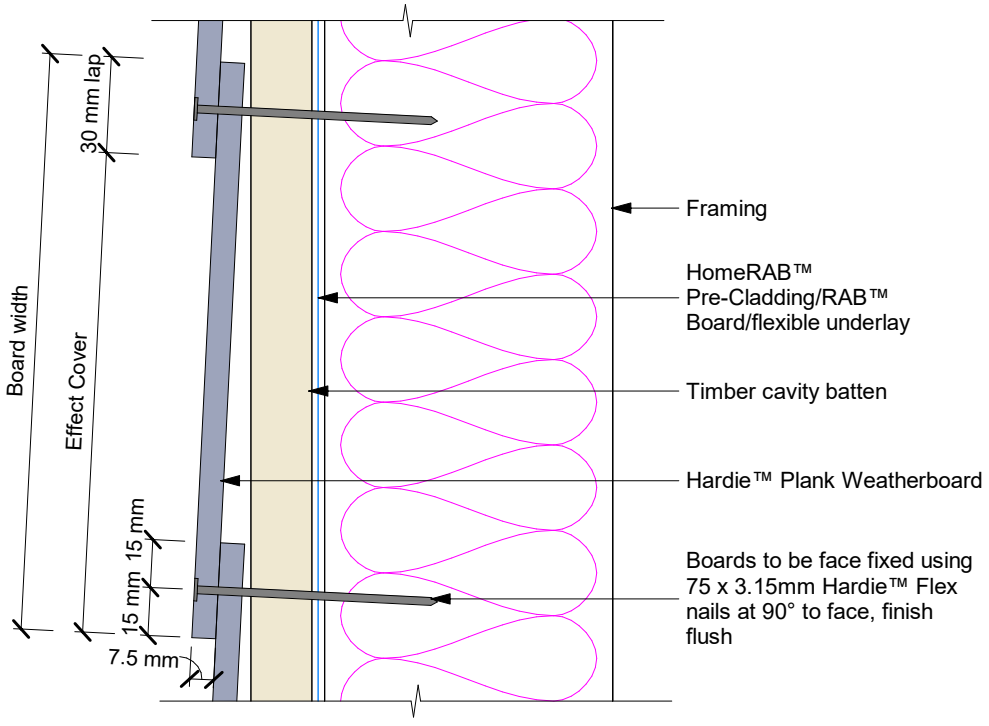

Face Nailing

RECEIVED 12/01/2023

Bcon22/0752 - WDC Approved Plans - 17/01/2023

Figure 19: Cavity aluminium box corner

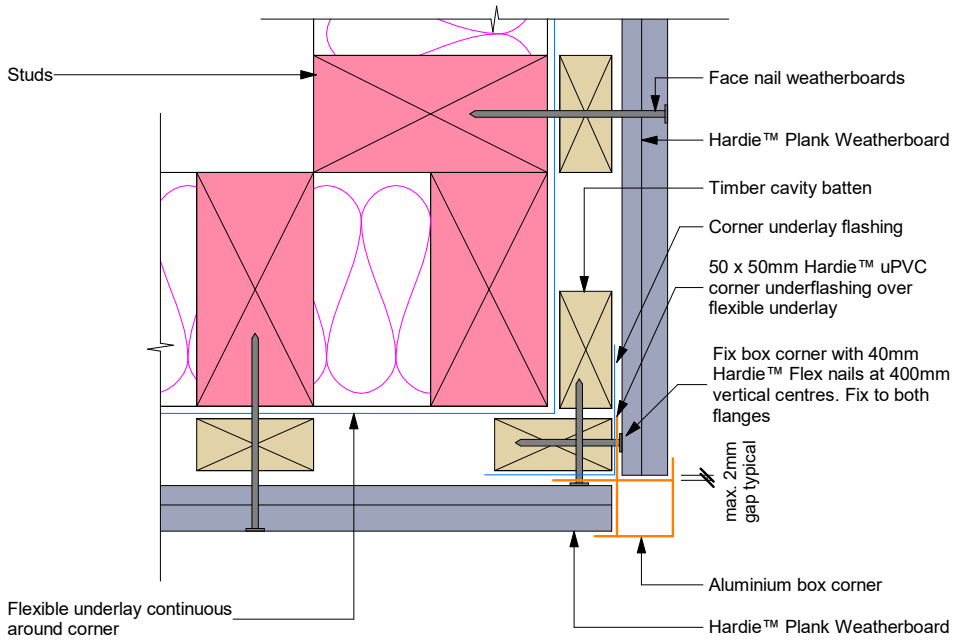

Figure 20: Cavity boxed corner

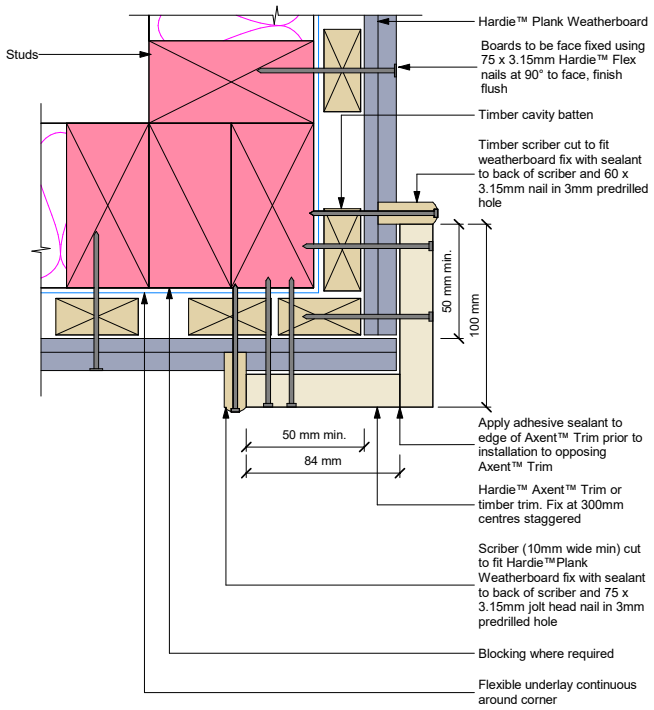

RECEIVED 12/01/2023

Bcon22/0752 - WDC Approved Plans - 17/01/2023

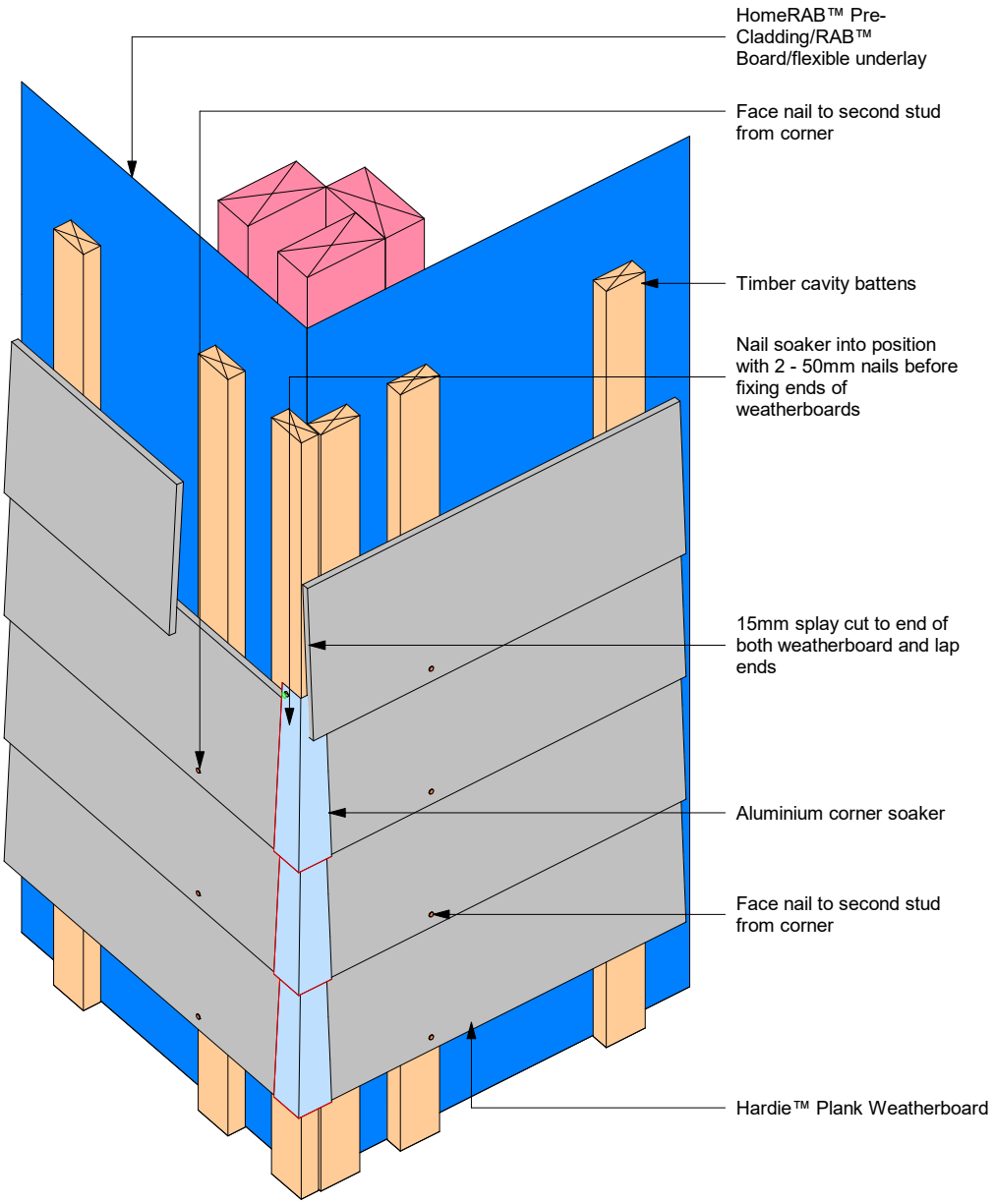

RECEIVED 12/01/2023

Bcon22/0752 - WDC Approved Plans - 17/01/2023

Figure 22: Cavity internal 90º aluminium 'W' mould

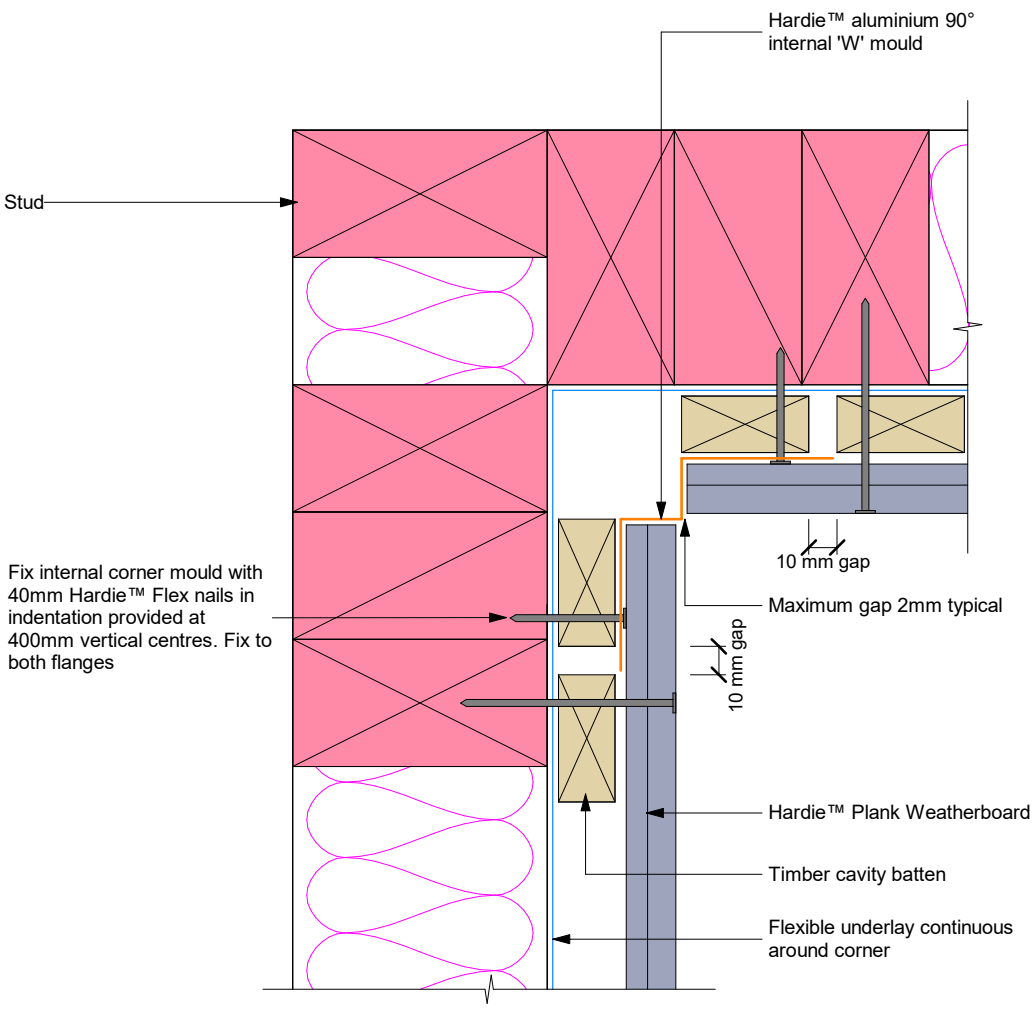

RECEIVED 12/01/2023

Bcon22/0752 - WDC Approved Plans - 17/01/2023

Figure 23: Cavity internal 135º aluminium 'W' mould

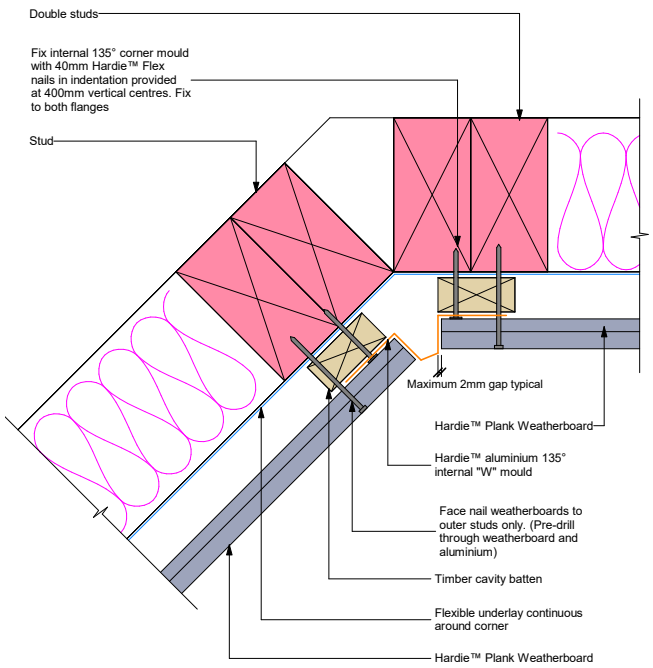

Figure 24: Cavity soffit detail

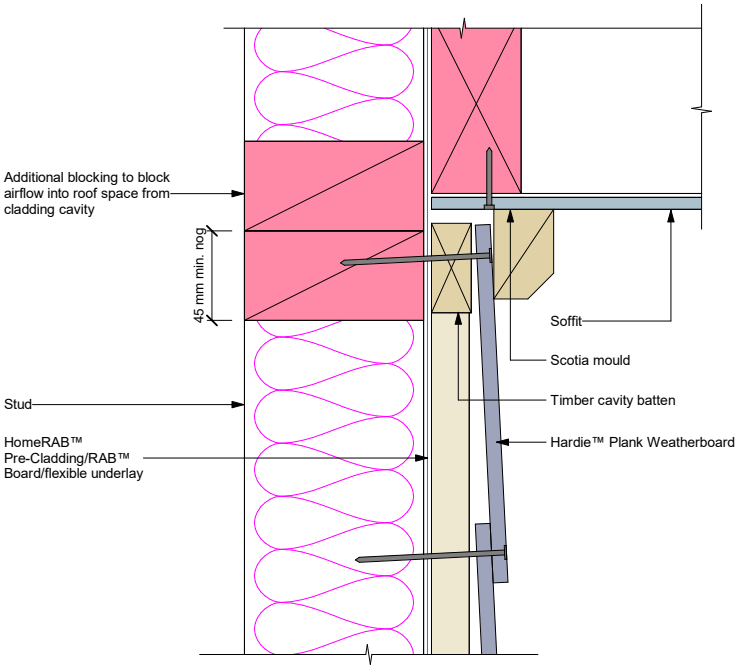

RECEIVED 12/01/2023

Bcon22/0752 - WDC Approved Plans - 17/01/2023

Figure 25: Cavity sill flashing without facings

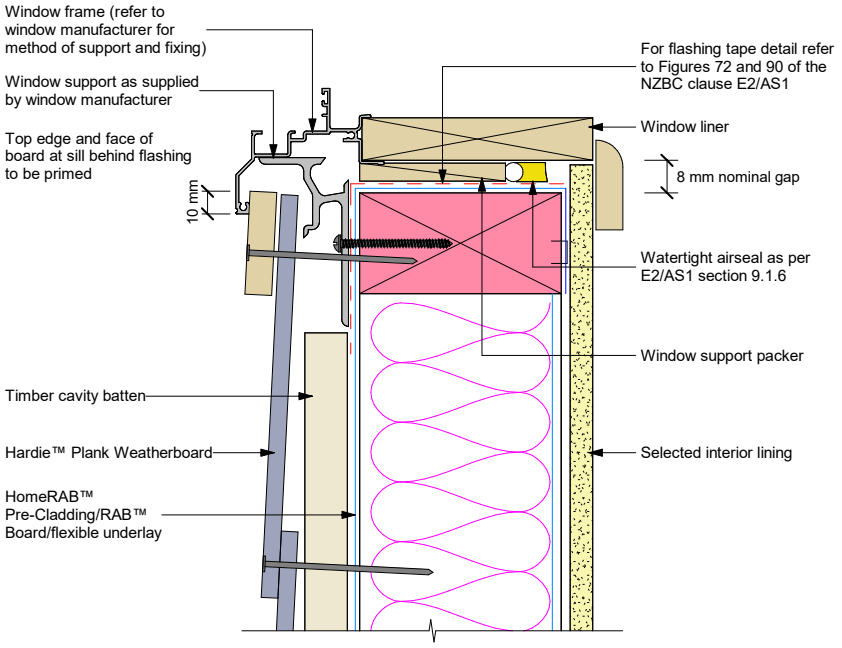

Figure 26: Cavity one piece head flashing without facings

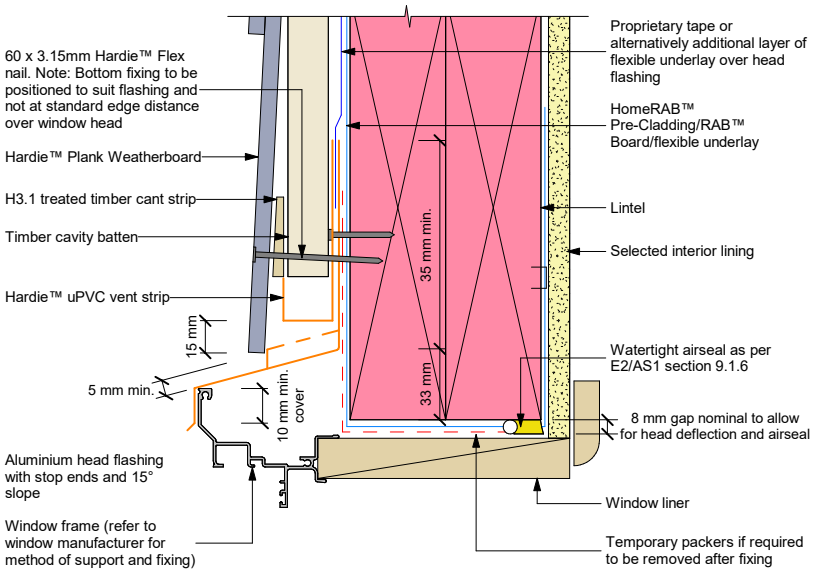

Notes:
- Sealant must be installed between head flashing and window flange in VH and EH wind zones and SED projects. Refer to FIgure 71 of E2/AS1

RECEIVED 12/01/2023

Bcon22/0752 - WDC Approved Plans - 17/01/2023

Figure 27: Cavity jamb flashing without facings

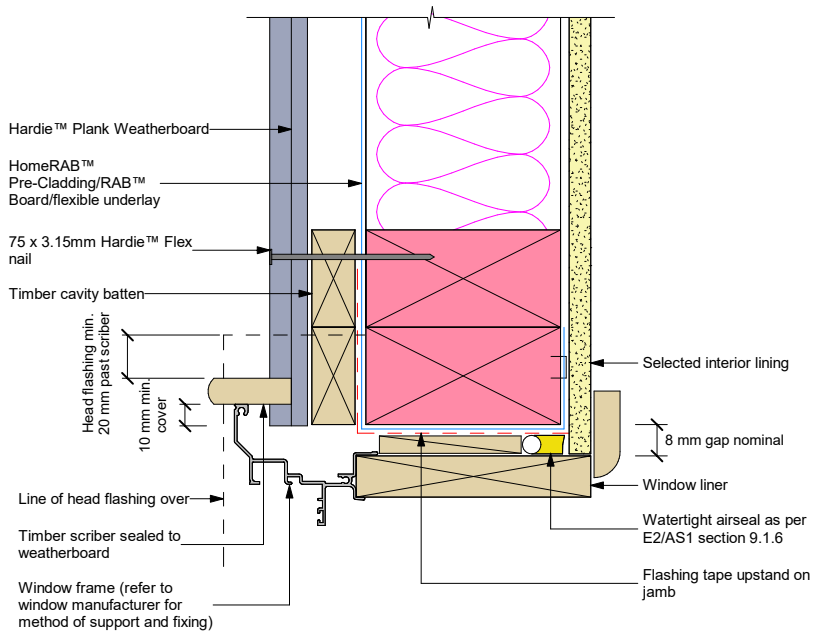

Note: Also refer Figure 91 NZBC clause E2/AS1 document for head and jamb details

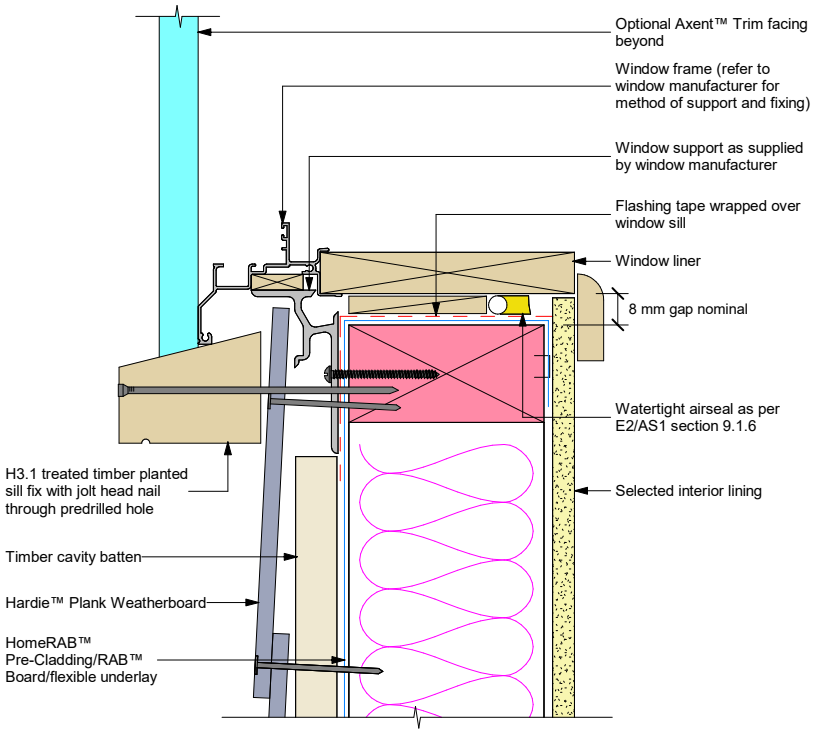

RECEIVED 12/01/2023

Bcon22/0752 - WDC Approved Plans - 17/01/2023

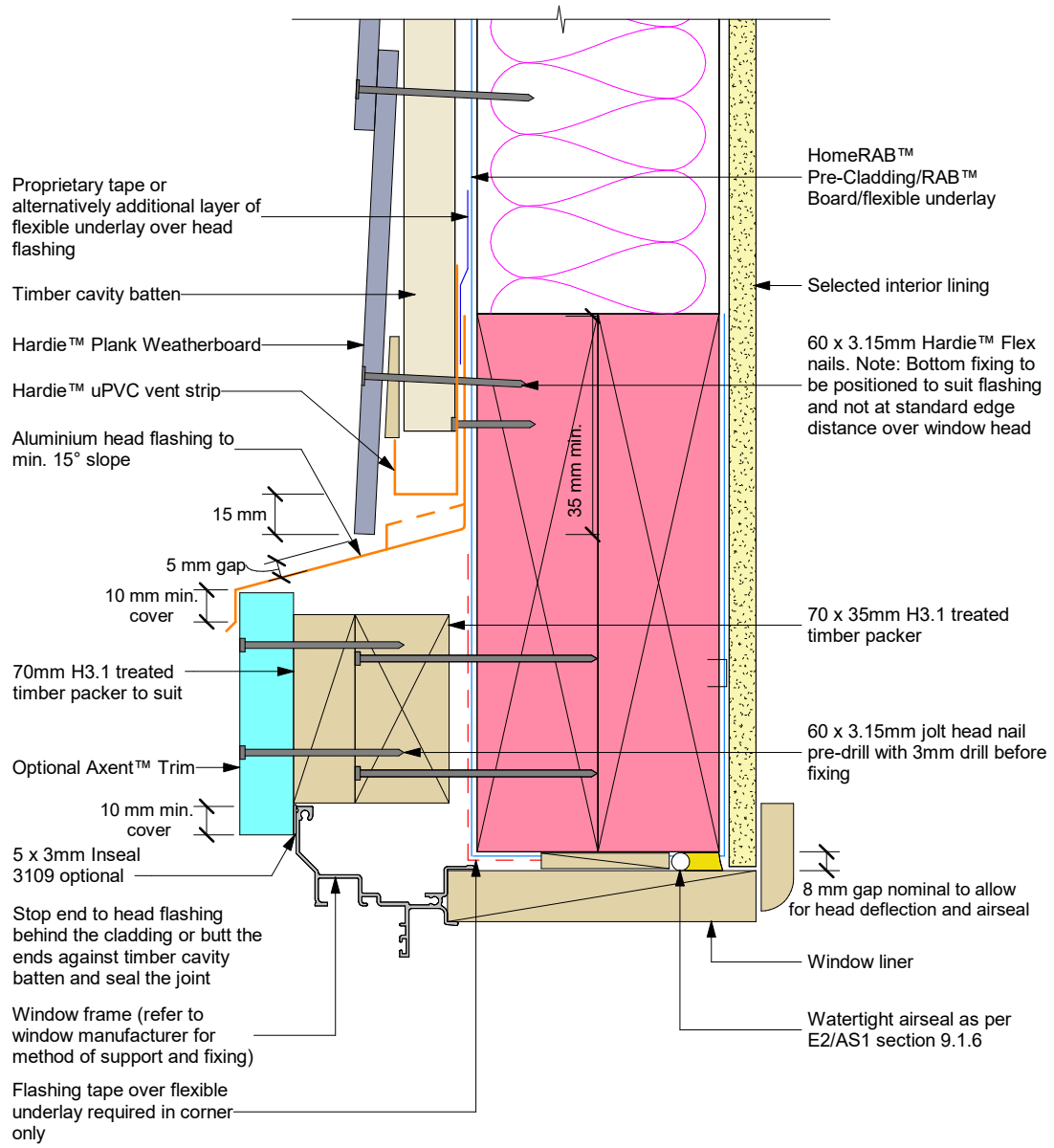

Note:
Sealant must be installed between head flashing and window flange in VH and EH wind zones and SED pressures

RECEIVED 12/01/2023

Bcon22/0752 - WDC Approved Plans - 17/01/2023

Figure 30: Cavity jamb flashing with facings

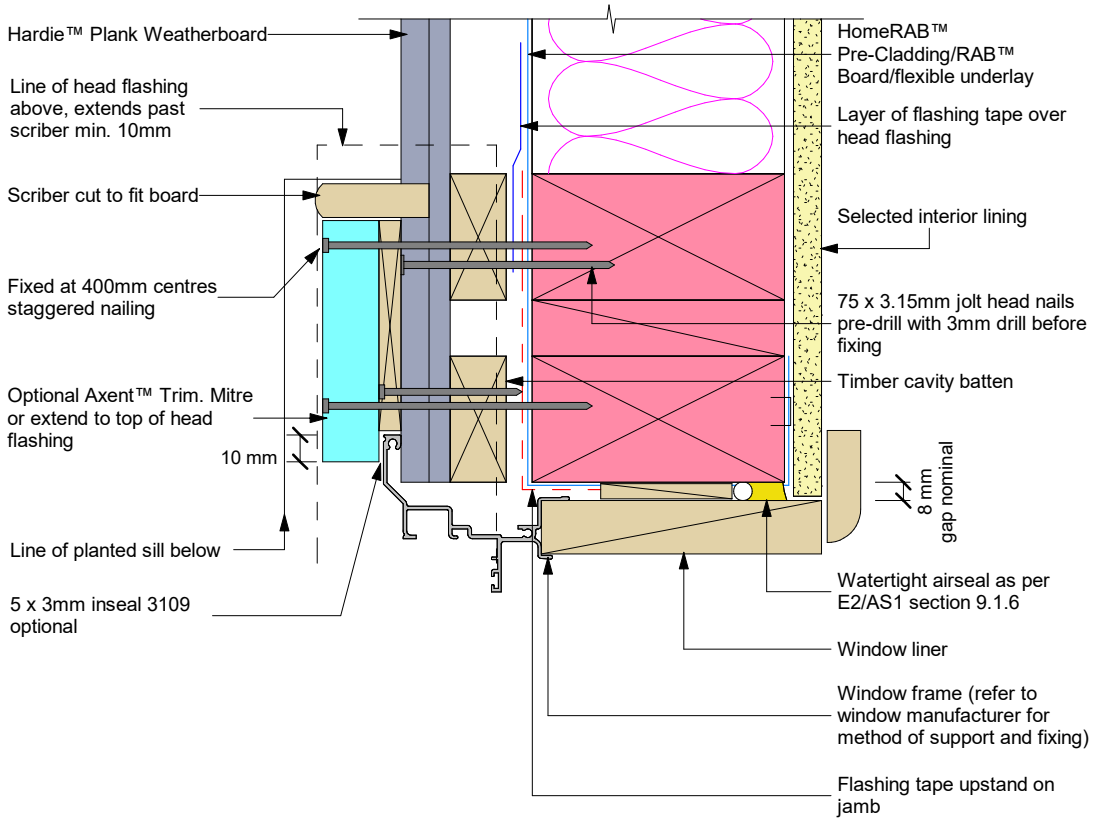

Notes:
- Also refer Figure 91 NZBC clause E2/AS1 document for head and jamb details

RECEIVED 12/01/2023

Bcon22/0752 - WDC Approved Plans - 17/01/2023

Figure 31: Cavity framing and batten setout

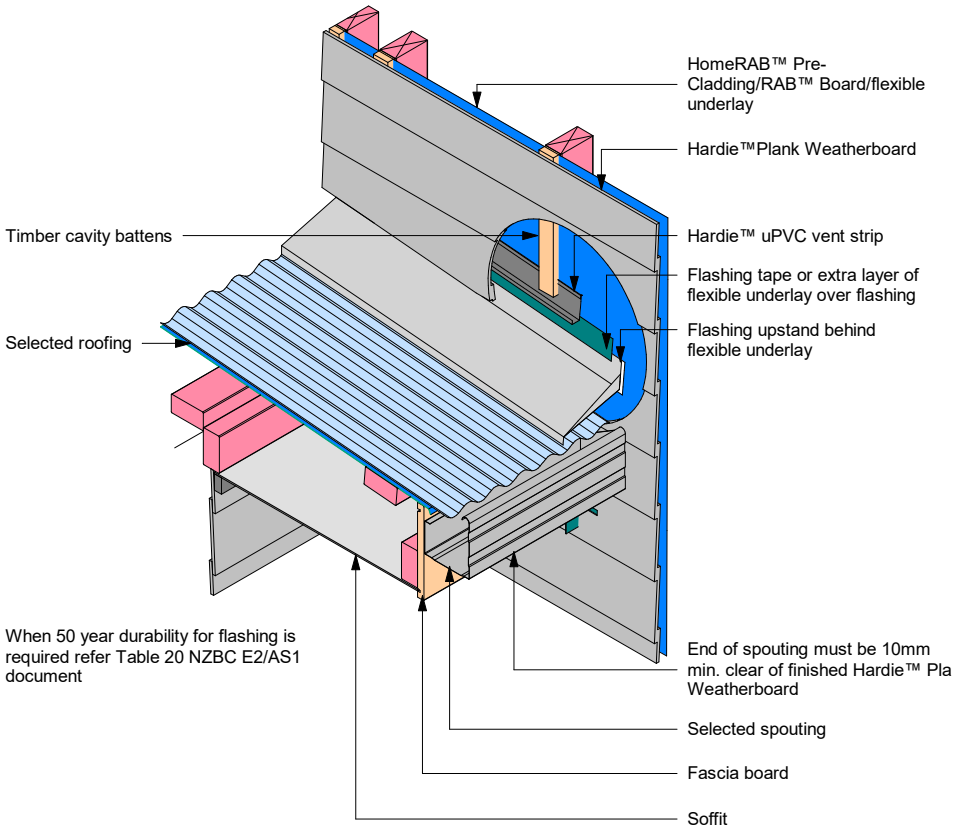

Figure 32: Cavity parapet flashing

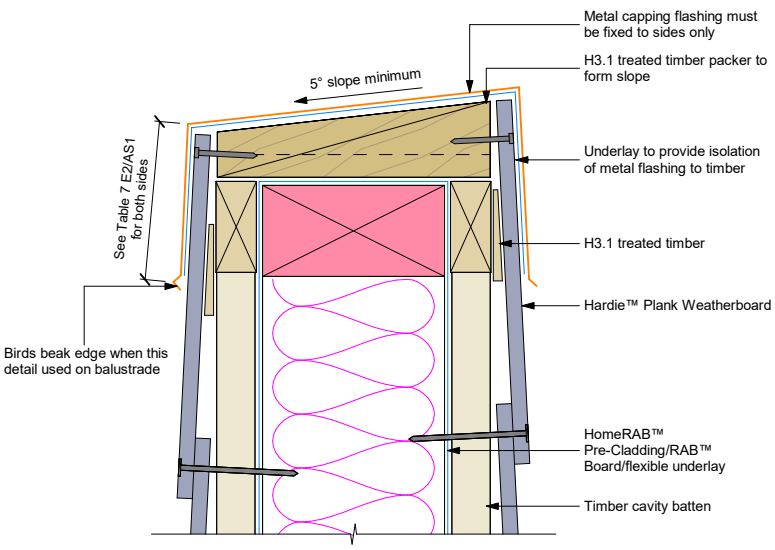

RECEIVED 12/01/2023

Bcon22/0752 - WDC Approved Plans - 17/01/2023

Figure 33: Cavity meter box at head

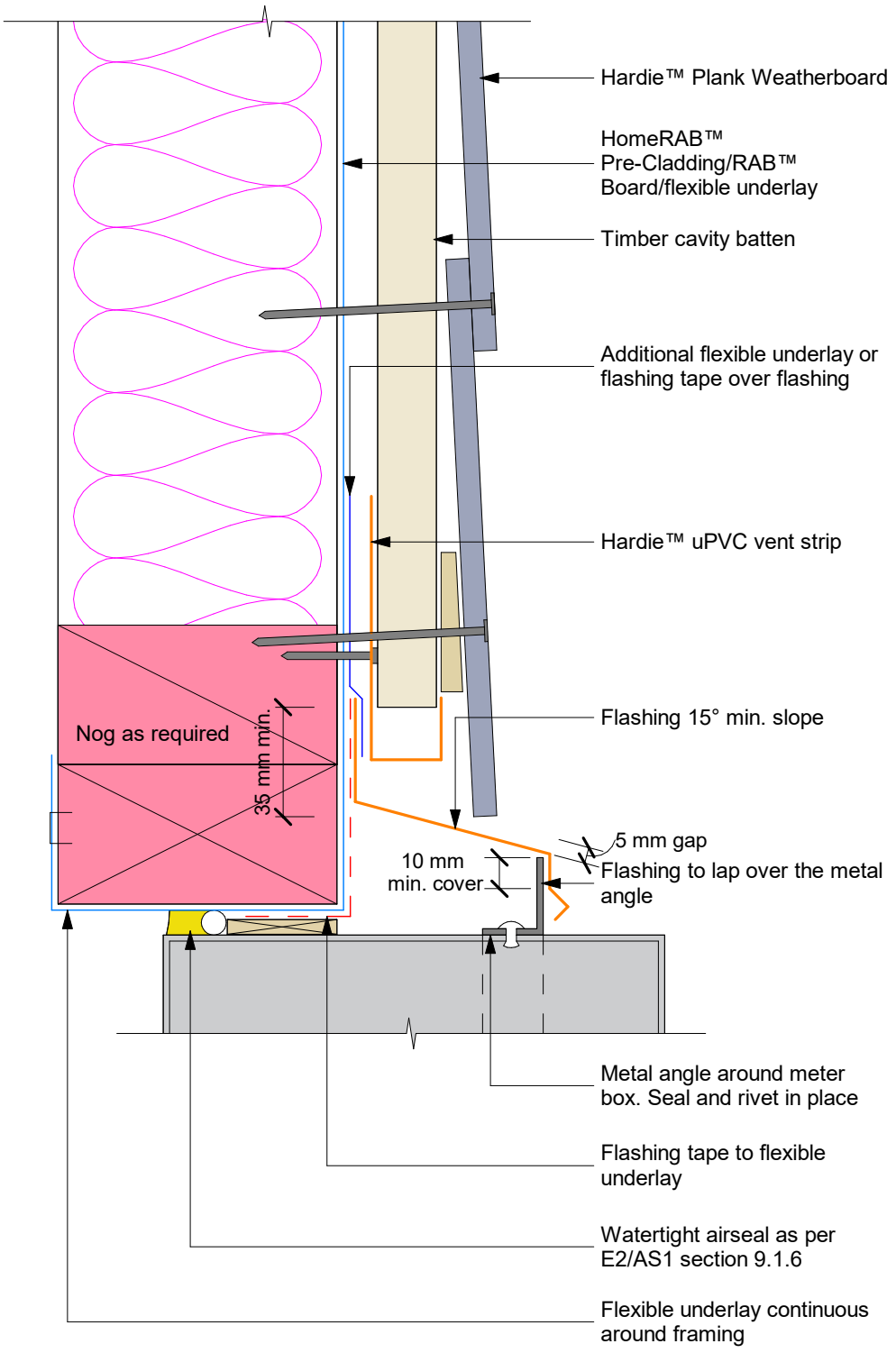

RECEIVED 12/01/2023

Bcon22/0752 - WDC Approved Plans - 17/01/2023

Figure 34: Cavity meter box at sill

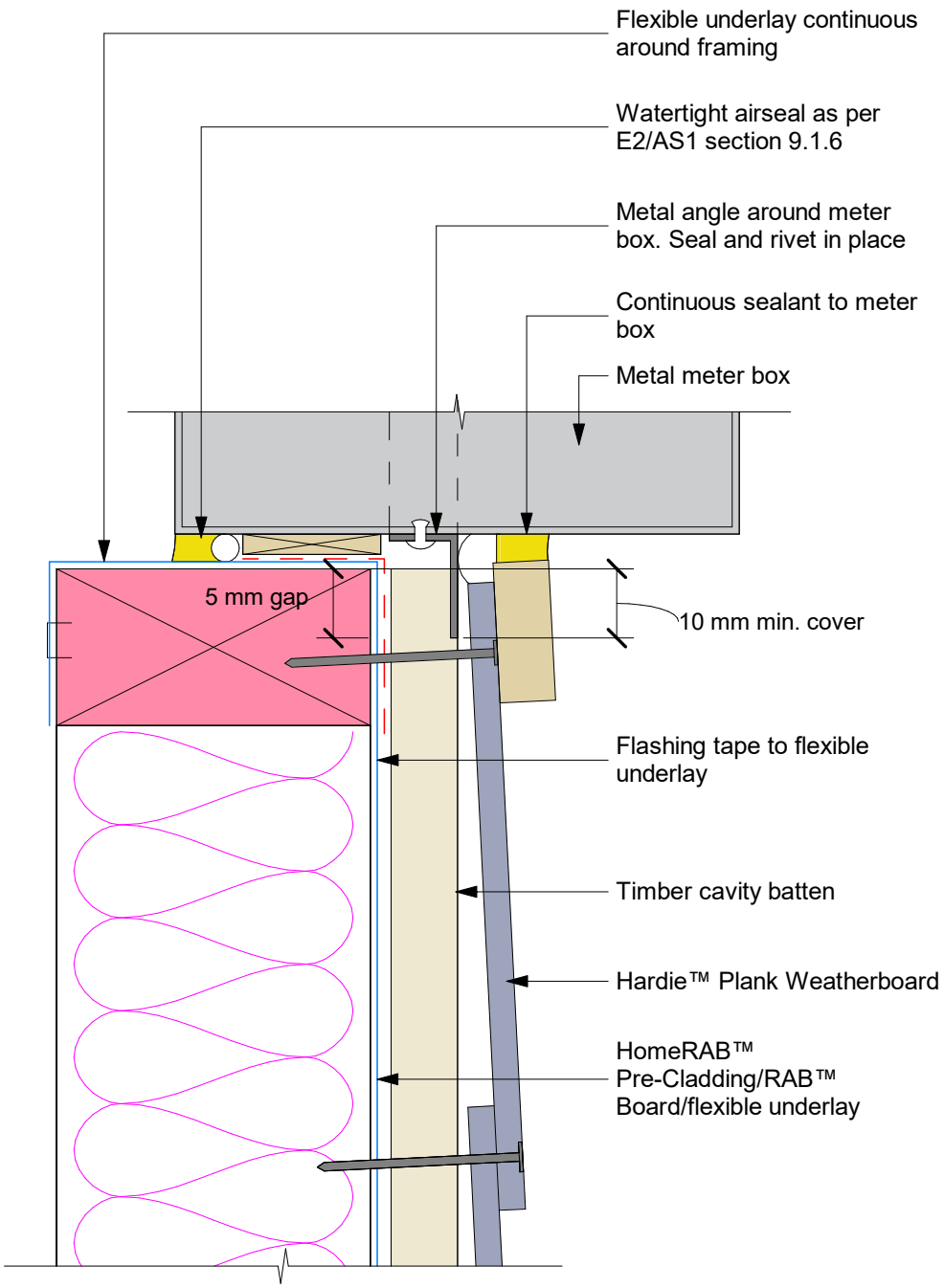

Note: Site cut edges to be primed

RECEIVED 12/01/2023

Bcon22/0752 - WDC Approved Plans - 17/01/2023

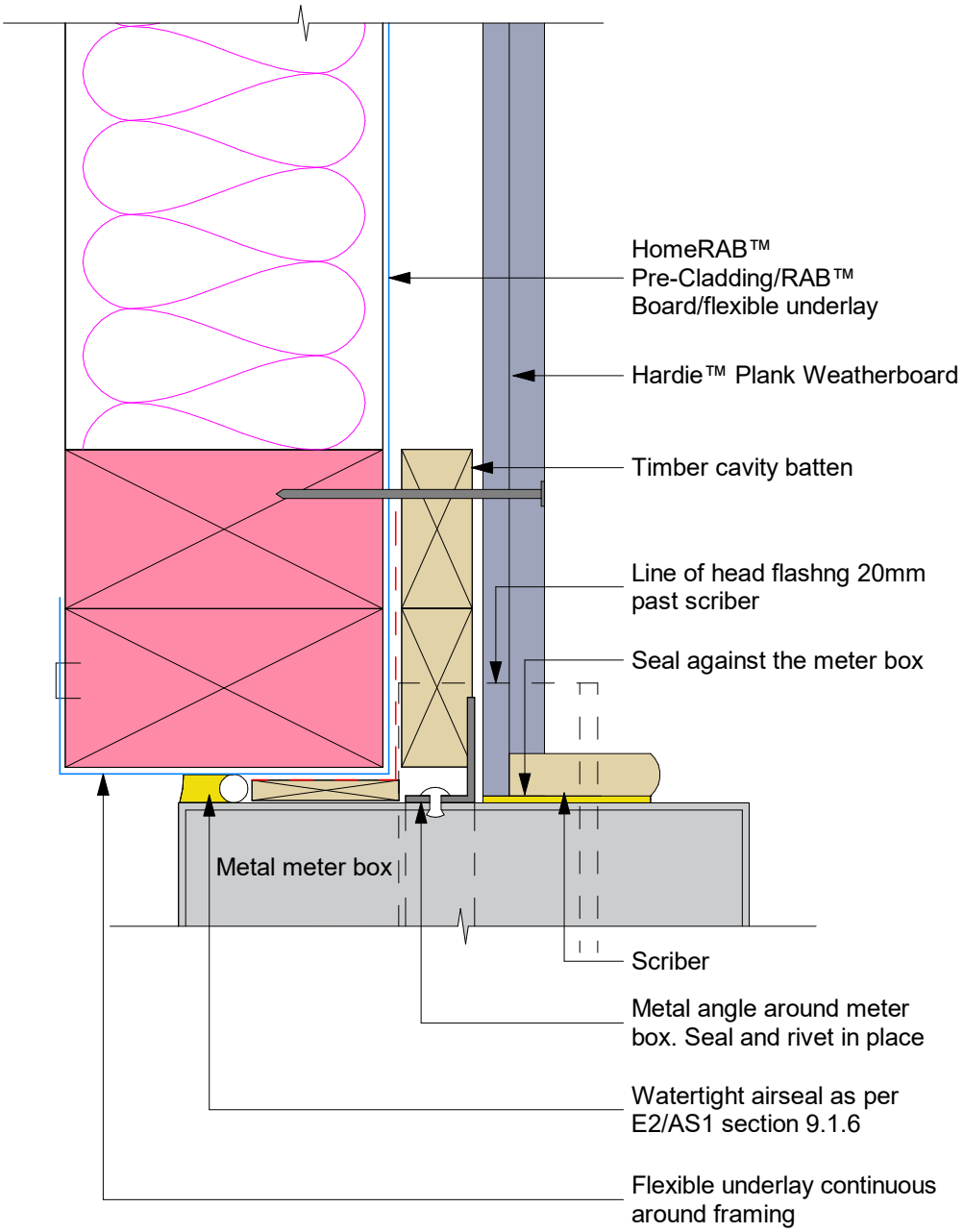

RECEIVED 12/01/2023

Bcon22/0752 - WDC Approved Plans - 17/01/2023

Figure 36: Cavity pipe penetration

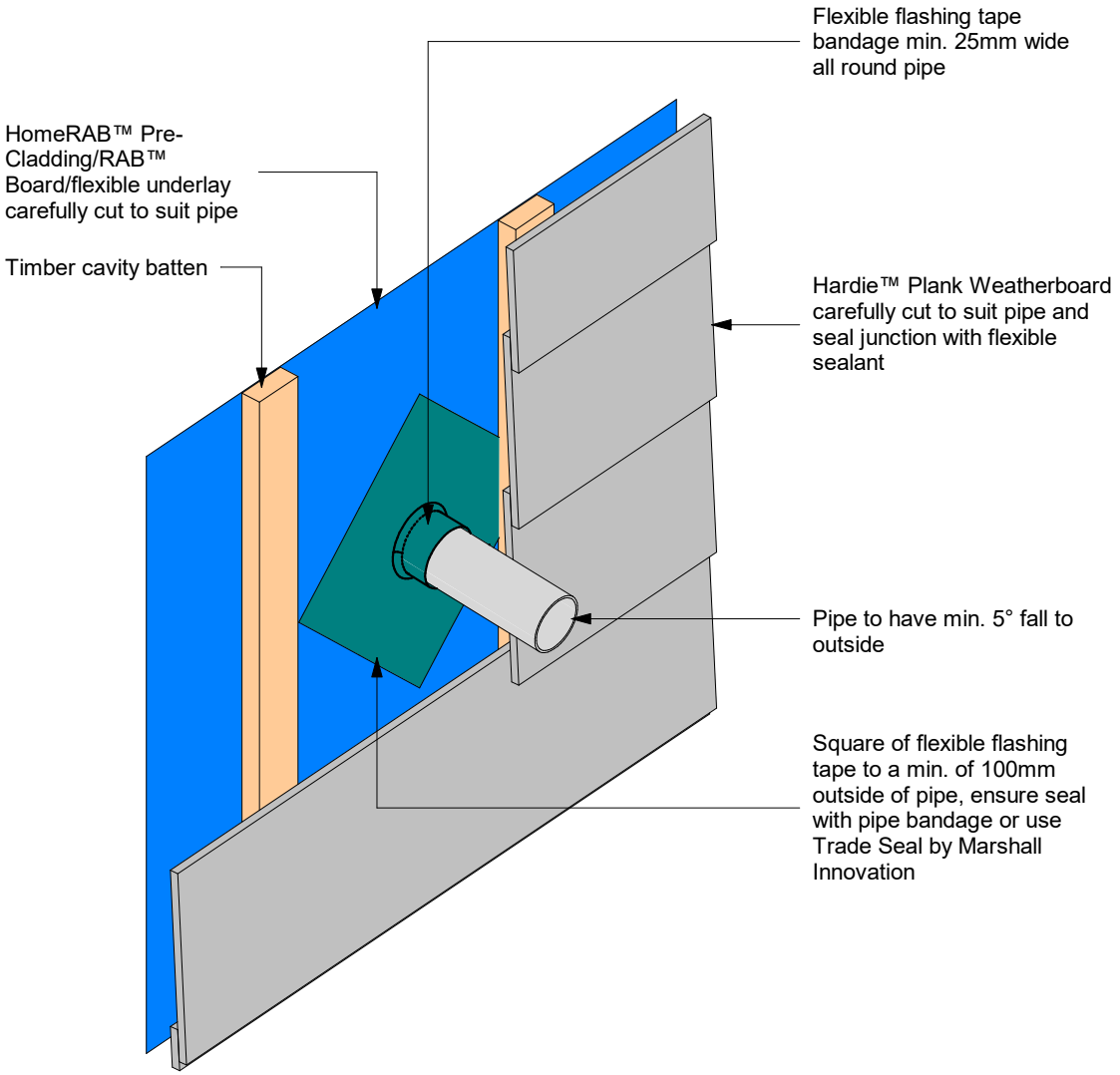

RECEIVED 12/01/2023

Bcon22/0752 - WDC Approved Plans - 17/01/2023

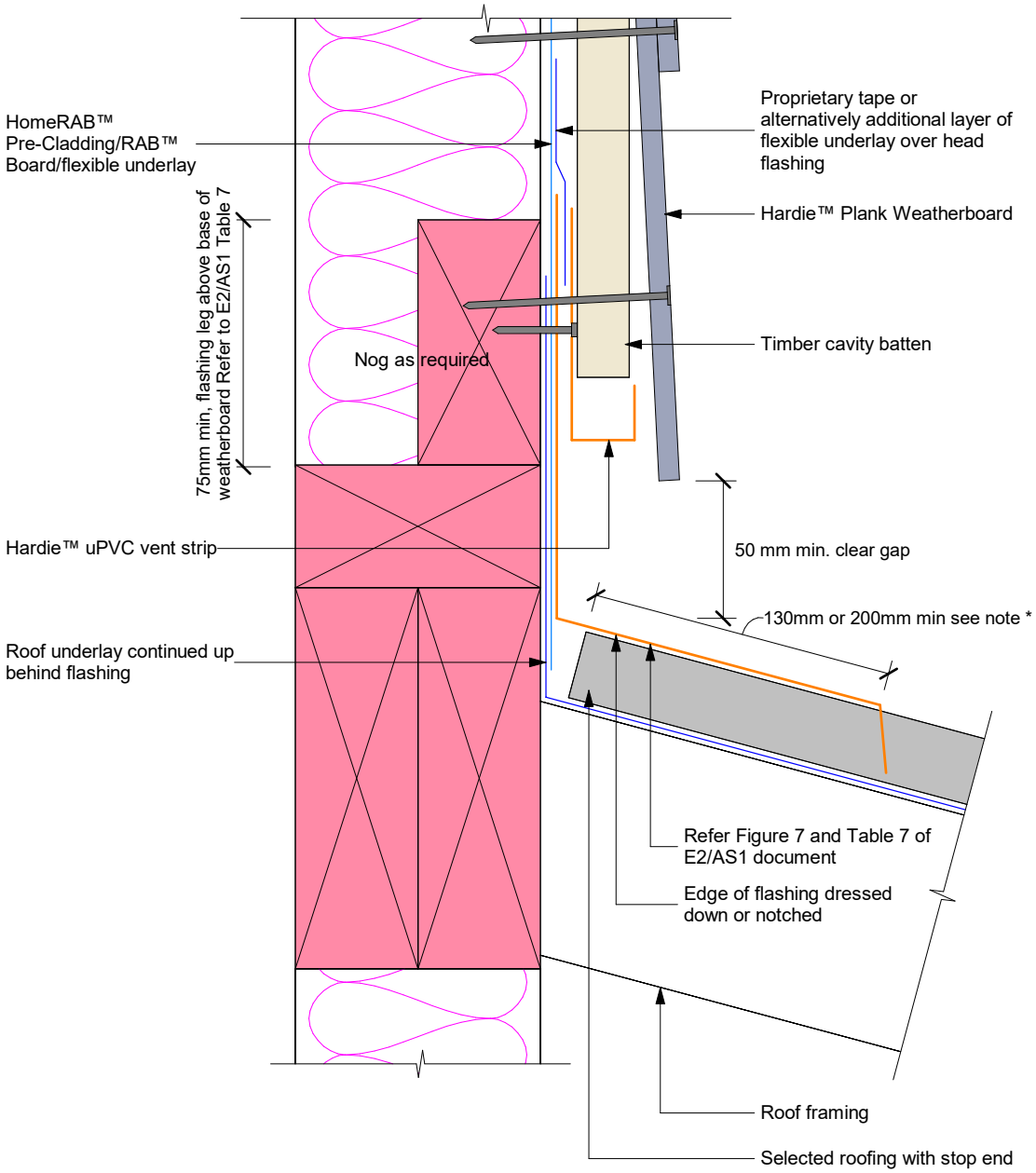

Notes:
* When 50 year durability for flashing is required refer to Table 20 of E2/AS1 of the NZBC

RECEIVED 12/01/2023

Bcon22/0752 - WDC Approved Plans - 17/01/2023

Figure 38: Garage door jamb

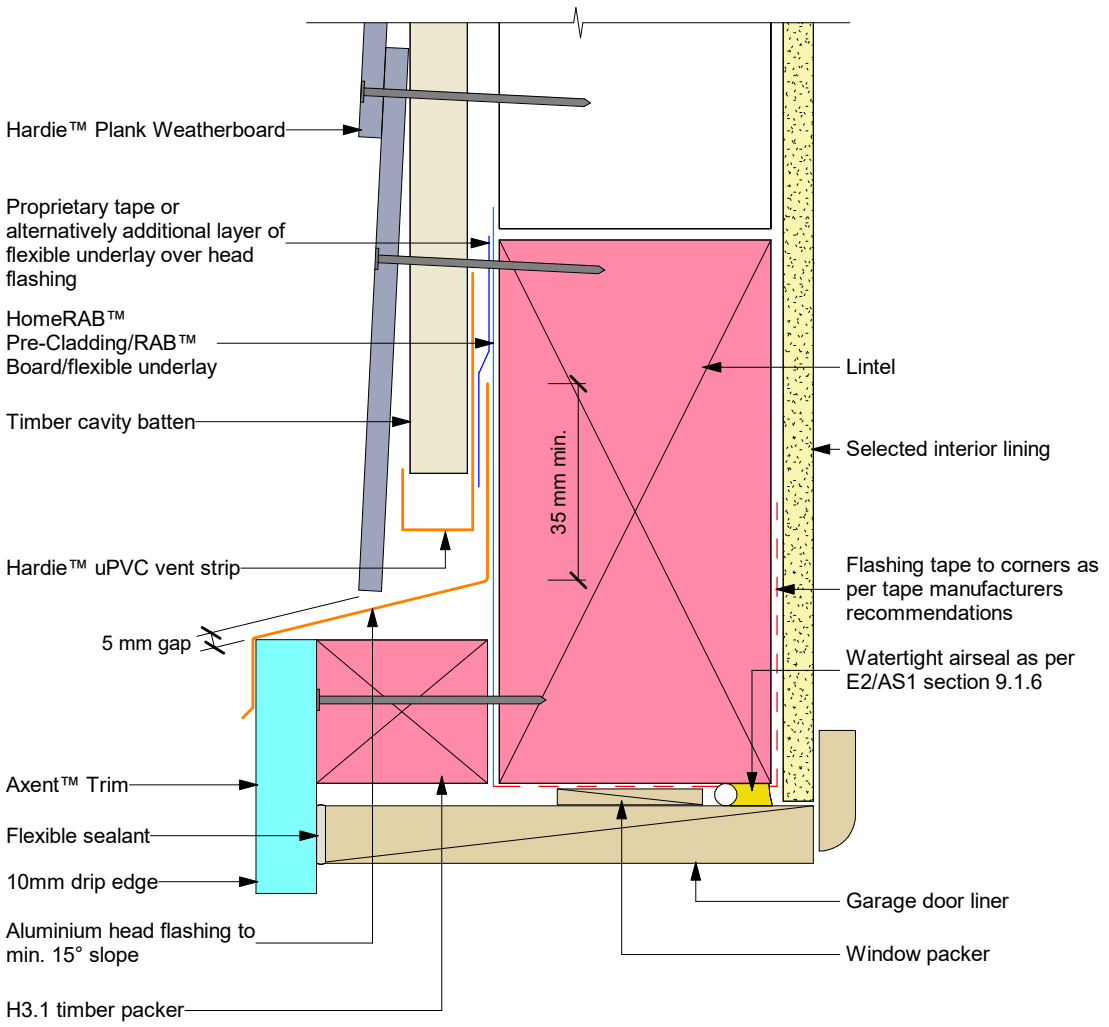

Note:
- Sealant must be applied between head flashing and liner in VH and EH wind zones and SED wind pressures

RECEIVED 12/01/2023

Bcon22/0752 - WDC Approved Plans - 17/01/2023

Figure 39: Garage jamb as per Linea Cavity

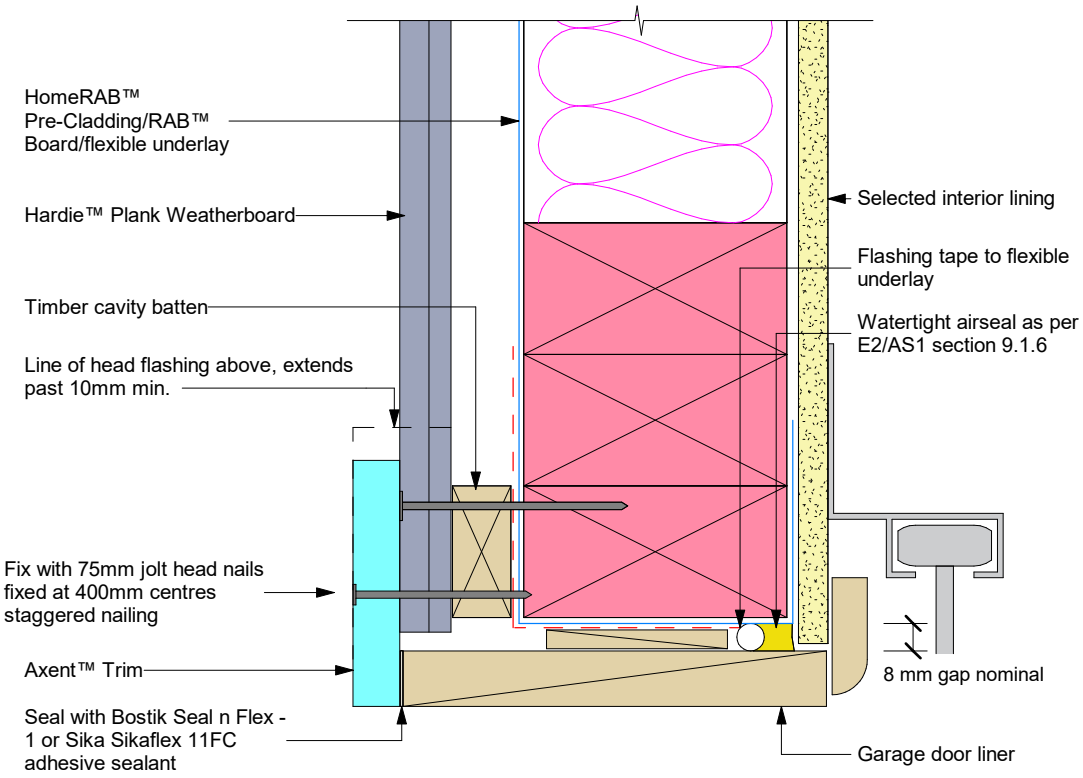

RECEIVED 12/01/2023

Bcon22/0752 - WDC Approved Plans - 17/01/2023

Notes

RECEIVED 12/01/2023

Bcon22/0752 - WDC Approved Plans - 17/01/2023

Notes

RECEIVED 12/01/2023

Bcon22/0752 - WDC Approved Plans - 17/01/2023

Notes

RECEIVED 12/01/2023

Bcon22/0752 - WDC Approved Plans - 17/01/2023

Product Warranty

James Hardie New Zealand Limited ("James Hardie") warrants for a period of 15 years from the date of purchase that the Hardie™ Plank Weatherboard (the "Product"), will be free from defects due to defective factory workmanship or materials and, subject to compliance with the conditions below, will be resistant to cracking, rotting, fire and damage from termite attacks to the extent set out in James Hardie's relevant published literature current at the time of installation. James Hardie warrants for a period of 15 years from the date of purchase that the accessories supplied by James Hardie will be free from defects due to defective factory workmanship or materials.

Nothing in this document shall exclude or modify any legal rights a customer may have under the Consumer Guarantees Act or otherwise which cannot be excluded or modified at law.

CONDITIONS OF WARRANTY:

The warranty is strictly subject to the following conditions:

a) James Hardie will not be liable for breach of warranty unless the claimant provides proof of purchase and makes a written claim either within 30 days after the defect would have become reasonably apparent or, if the defect was reasonably apparent prior to installation, then the claim must be made prior to installation.

b) This warranty is not transferable.

c) The Product must be installed and maintained strictly in accordance with the relevant James Hardie literature current at the time of installation and must be installed in conjunction with the components or products specified in the literature. Further, all other products, including coating and jointing systems, applied to or used in conjunction with the Product must be applied or installed and maintained strictly in accordance with the relevant manufacturer's instructions and good trade practice.

d) The project must be designed and constructed in strict compliance with all relevant provisions of the current New Zealand Building Code ("NZBC"), regulations and standards.

e) The claimant's sole remedy for breach of warranty is (at James Hardie's option) that James Hardie will either supply replacement product, rectify the affected product or pay for the cost of the replacement or rectification of the affected product.

f) James Hardie will not be liable for any losses or damages (whether direct or indirect) including property damage or personal injury, consequential loss, economic loss or loss of profits, arising in contract or negligence or howsoever arising. Without limiting the foregoing James Hardie will not be liable for any claims, damages or defects arising from or in any way attributable to poor workmanship, poor design or detailing, settlement or structural movement and/or movement of materials to which the Product is attached, incorrect design of the structure, acts of God including but not limited to earthquakes, cyclones, floods or other severe weather conditions or unusual climatic conditions, efflorescence or performance of paint/coatings applied to the Product, normal wear and tear, growth of mould, mildew, fungi, bacteria, or any organism on any Product surface or Product (whether on the exposed or unexposed surfaces).

g) All warranties, conditions, liabilities and obligations other than those specified in this warranty are excluded to the fullest extent allowed by law.

h) If meeting a claim under this warranty involves re-coating of Products, there may be slight colour differences between the original and replacement Products due to the effects of weathering and variations in materials over time.

Disclaimer: The recommendations in James Hardie's literature are based on good building practice, but are not an exhaustive statement of all relevant information and are subject to conditions (c), (d), (f) and (g) above. However, as the successful performance of the relevant system depends on numerous factors outside the control of James Hardie (e.g. quality of workmanship and design) James Hardie shall not be liable for the recommendations made in its literature and the performance of the relevant system, including its suitability for any purpose or ability to satisfy the relevant provisions of the NZBC, regulations and standards, as it is the responsibility of the building designer to ensure that the details and recommendations provided in the relevant James Hardie installation manual are suitable for the intended project and that specific design is conducted where appropriate. Hardie™ Plank Weatherboard are classified as acceptable solution as per E2/AS1 and conforms to the requirements of the NZBC when installed in accordance with the Hardie™ Plank Weatherboard Technical Specification.

© 2021. James Hardie New Zealand Limited. TM and ® denotes a Trademark or Registered Mark owned by James Hardie Technology Limited.

RECEIVED 12/01/2023

Bcon22/0752 - WDC Approved Plans - 17/01/2023



RECEIVED 12/01/2023

JamesHardie™

Ask James Hardie™ | Call 0800 808 868 | jameshardie.co.nz

© 2021. James Hardie New Zealand Limited. TM and ® denotes a Trademark or Registered Mark owned by James Hardie Technology Limited.
Sikaflex®, Sika®, Tyvek® and Protecto® are trademarks of their respective owners.

Bcon22/0752 - WDC Approved Plans - 17/01/2023

Specification

Proposed House Alteration for

Mr Noel Oli

9 Tui Place, Whanganui

RECEIVED 12/12/2022

Bcon22/0752 - WDC Approved Plans - 17/01/2023

* PRELIMINARY AND GENERAL

1. SCOPE

This specification conforming to the attached Agreement and Conditions of Contract describes the work to be done and the materials to be used in the construction of the house shown on the attached drawings.

2. BUILDING CONSENT/S:

The Owner or Owner's agent shall apply to the Territorial Authority (TA) for a BUILDING CONSENT, for inspections by the TA during construction and pay all bonds and fees incurred.

3. ACCEPTABLE SOLUTIONS:

All work shall be equal to (or better than) 'Acceptable Solutions' given in NZBC Approved Documents; complying with the Building Act 2004 and Building Regulations.

4. HEALTH AND SAFETY:

As directed by the Owner, the Contractor shall be responsible in complying with the Health and Safety in Employment Act 1992, effectively operating a Safety Management Programme for the duration of the contract.

5. INSURANCES:

The Contractor shall take out Builders All Risk Policy.

6. INTERPRETATION:

Work or materials shown on the drawings but not specified (or specified and not shown) shall be supplied as though both shown and specified. Materials shown but not specified must be of the kinds commonly employed for the service they are intended to perform. All figured dimensions shall be taken in preference to scale. The Contractor shall be held responsible for setting out of work and he shall make good at his own expense any errors that occur through his lack of checking or faulty workmanship. Unless written as provide only or fix only, the words 'provide' and 'fix' shall mean 'provide and fix'.

"This document is a general specification and is to be read in conjunction with the Plans and the Building Contract. Where there is any contradiction between the Building Contract, the Plans and Specifications, then the Building Contract shall take first precedence, the Plans second precedence, the Specification Schedule third precedence and the General Specification fourth precedence."

RECEIVED 12/12/2022

Bcon22/0752 - WDC Approved Plans - 17/01/2023

7. STABILITY DURING CONSTRUCTION:

The Contractor shall carefully brace and support all parts of his work against damage by wind and protect work from the elements as necessary during construction.

8. PROTECTION OF PROPERTY:

The Contractor shall protect adjoining properties during the contract and shall make good all damage at his own expense.

9. DAMAGE:

The Contractor shall make good at his own expense and to the satisfaction of controlling authorities, any damage done to footpaths, kerbs, drainage, etc, or other property under control of such authorities.
Each trade shall take care to prevent damage or disfigurement of the work of other trades and will be responsible for cost of restoring it.

10. MATERIALS:

Any materials specified that are not procurable when required, thus slowing progress of the Contract, may be substituted with other similar materials, providing that the substitute materials conform to the NZBC and the Owner gives permission. The Contractor is first to notify the Owner of any change proposed and at the completion of the Contract adjust any difference in cost.

11. WORKMANSHIP:

All work shall be carried out in accordance with the best trade practice, in strict conformity with the drawings and specification to the satisfaction of the Owner. All defective or damaged work shall be removed and made good to the satisfaction of the Owner.

12. CLEANING:

The Contractor, at the conclusion of the Contract, shall have all ceilings, walls and woodwork carefully dusted and wiped down, windows washed and glass free from scratches, floors brushed and wiped down and the entire building left in a perfectly clean condition for occupation.

* EXCAVATION

1. GENERAL:

In accordance with Preliminary and General clauses applying to this section and:

- Means of compliance to relevant NZBC requirements.
- Excavation code of Practice, Occupational Health and Safety Department.
- Regional/Territorial Authority requirements for silt control from excavations.

RECEIVED 12/12/2022

Bcon22/0752 - WDC Approved Plans - 17/01/2023

2. SETTING OUT:

Set out the work as shown or implied on the drawings. Check accuracy in terms of position, levels and square.

3. HARDFILL:

Use only approved fill well-compacted under concrete ground floors and as otherwise specified.

4. DRAINAGE TRENCHES:

Take out seepage and drainage trenches where indicated to adequate depth and falls to prevent dampness under the building. Provide *Nova* drains or similar bedded on scoria where required.

* CONCRETE AND REINFORCING

1. GENERAL:

Accord with Preliminary & General clauses applying to this section and means on compliance to relevant NZBC requirements.

2. EXTENT OF WORK:

Comprises the setting out, boxing and placing of concrete in the foundations, floor slabs, walls, beams and bands and any other concrete work shown in the drawings.

3. MATERIALS:

Ordinary grade concrete shall comply with NZS 3109.
Concrete from an Approved Batching plant only shall be used.

Minimum concrete strength at 28 days shall be:

a) 10 MPa for un-reinforced concrete used in mass foundations.
b) 17.5 MPa for un-reinforced concrete applications for reinforced concrete either not exposed to weather or exposed to the weather in zone B as shown in figure 4.1 NZS 3604:2011.
c) 20 MPa for reinforced concrete exposed to the weather at least 500m from mean high tide mark in Zone C as shown in figure 4.1 NZS 3604:2011.
d) 25 MPa for reinforced concrete exposed to weather and within 500m of the mean high tide mark.

4. FORMWORK:

Formwork shall be so constructed that the concrete thickness and shapes required are obtained as detailed without removal causing damage. Methods of construction and pouring and curing of concrete and times of removal of Formwork shall be as set down in NZS 3109.

RECEIVED 12/12/2022

Bcon22/0752 - WDC Approved Plans - 17/01/2023

5. CONCRETE FOUNDATION & FLOOR SLAB:

Foundation footings and reinforcing shall be to the sizes shown on drawings in accordance with relevant clauses of NZS 3604:2011, supporting single storey, 2 or 3 storey as appropriate. Such walls shall finish not less than 225mm above finished ground level but not measure more than 2m above the bottom of the footings.

6. PATHS:

Where shown on drawings, paths shall be laid not less than 75mm thick reinforced with 668 mesh or similar. The surface shall be graded evenly to provide suitable drainage and left with a uniform finish using a wooden float.

7. OTHER REQUIREMENTS:

Paving as detailed on drawings.

8. COMPLETION:

Make good any defective work. Leave all clean and stain free.

* CARPENTRY AND JOINERY

1. GENERAL:

Accord with Preliminary & General clauses applying to this section and means of compliance to relevant NZBC requirements.

2. EXTENT OF WORK:

The work of this section shall include all labour, materials, equipment necessary to carry out and complete the carpentry as shown, or as further required by this specification. Any work that is intended or implied but not specifically shown but necessary for the proper completion of the building shall be included.

3. ATTENDANCE AND PROTECTION:

Arrange and attend upon all works by other trades in a logical sequence e.g. as in this section to allow early closing-in. Provide all blocking, fixings, trims, nogging as necessary for the full completion of their respective works and make good after all trades. Provide for temporary protection from adverse weather and damage and ensure closing in of the building as soon as possible.

4. MATERIALS AND WORKMANSHIP:

All timber and wood based products shall conform to NZS 3602 requirements, "Code of practice for specifying timber and wood-based products for use in building". Timbers shown in the Schedule of Timbers to be treated with an approved preservative process in

RECEIVED 12/12/2022

Bcon22/0752 - WDC Approved Plans - 17/01/2023

plants licensed by the Timber Preservation Council. Any materials which in the opinion of the Owner, Loan Body or Territorial Authority are not up to standard, to be removed immediately from the site. All work shall be carried out in accordance with best trade practice.

5. COMPLIANCE WITH THIS SPECIFICATION:

a) Do any works under specific design in accord with details provided. The Contractor and Carpenter shall do all other work in accord with NZS 3604-2011. In particular complying with the whole of SECTION 2 - GENERAL of NZS 3604-2011. The treatment requirements are:

b) All fixings of materials to be in accordance with NZS 3604:2011, Section 4.4. Including sheet lining and cladding materials for walls and ceilings that are not wood-based, e.g.: *Gibraltar* board, fibrous plaster or wood cellulose sheeting; especially when used as diaphragms and for wall bracing.

6. EXTERIOR JOINERY:

All windows shall be NZS 4211.
Aluminium joinery complete with glazing, frictional restraints and catches, fix plumb both ways and in correct alignment and flash all in accord with manufacturer's instructions. All glazing to be in accordance with NZS 4223.

7. DAMP PROOFING:

All timber to be protected from dampness with 3-ply bituminous felt or other approved damp proofing material when in contact with concrete or brickwork, or as in clause 7.5 of NZS 3604:2011.

8. ROOF CONSTRUCTION: (See Drawings and Schedule)

9. PURLINS, EAVES, GABLE ENDS:

Size of framing, spacing, overhangs and sheathing type as shown on plan.

10. FASCIA BOARDS ETC:

Fix fascia, barge, frieze etc to suit roofing selected.

11. THERMAL INSULATION:

All roofs, walls, and floors are to be insulated in accordance with NZS 4214 and NZS 4218:2009. No insulation material shall be used that does not comply with NZBC clause H1. All insulation materials are to be installed in accordance with manufacturer's recommendations.

12. MOISTURE CONTROL:

Where a vapour barrier is required in the form of foil or polythene film, this barrier shall be fixed according to manufacturer's instructions. Foil or polythene film shall not be used as a

RECEIVED 12/12/2022

Bcon22/0752 - WDC Approved Plans - 17/01/2023

substitute for building paper. Building paper shall be properly fixed to bottom plates, especially in veneer construction, to prevent entry of sub-floor air into stud cavities. Linings shall not be fixed until moisture content of framing has been tested and approved.

A proper solvent based paint or varnish finish must be used for plaster (Gibraltar board or fibrous plaster) linings to 'wet' rooms such as kitchens, bathrooms and laundry. Water based/emulsion paints must not be used in such rooms.

13. Aluminium Doors and Windows:

To comply with NZS 3504. All glazing to be in accordance with NZS 4223. Safety glass and mirrors in Bathroom.

14. DOORS AND FRAMES

External doorframes shall be of 40mm full width material, internal 30mm rebated or 25mm (or 18mm) material with 12mm planted stops. Doors shall comply with NZS 1158, with external Fibreglass panel as shown on drawings, all properly constructed with stiles and rails.

15. WARDROBES:

Construct as shown on plan shelving will be painted.

16. PANTRY KITCHEN CUPBOARDS:

Construct units to sizes shown on plans, with door and shelves.

17. SKIRTINGS :

Finish at junction of floor and wall with 60mm x 12mm skirting with ends neatly butted, scribed or mitred. Scribed to floor where necessary. Where required fix Scotia mould at ceiling junction, supply and fix beads, half rounds and all trim as required to complete the work.

18. BATHROOM; SHOWER AREAS:

All wall linings to be fixed to manufacturer's specification with adequate capillary gaps or flashing / trim or sealant to prevent leakage. Provide for all sanitary fittings shown on plan and given under "SANITARYWARE/FITTINGS" schedule.

19. ENSUITE:

Fit out as shown on plan and given under "SANITARYWARE/FITTINGS" schedule.

20. HARDWARE:

Allow for the supply of all hardware required. Door handles locks, window fitting, door and drawer pulls, stops, angles, vents, towel rails etc. Allow taking delivery and fix. Door handles polished brass lever action.

RECEIVED 12/12/2022

Bcon22/0752 - WDC Approved Plans - 17/01/2023

21. CLEANING AND COMPLETION:

The Contractor at the conclusion of the Contract shall have all ceilings, walls and woodwork carefully dusted and wiped down. Windows washed and glass free from scratches and paint. Floors brushed and the entire building and site left in a clean condition for occupation.

* ROOF COVERINGS

1. TYPES OF ROOF COVERINGS:

a) Coverings to the main areas of roof/s shall consist of concrete tile roof (existing) and new longrun colour steel corrugated roof with standard trim.

b) The roof covering Fixer and plumber shall advise on substructure/substrate needs. Inspect and have defects or omissions remedied and do adequate preparatory work.

2. SUBSTRUCTURE AND SUBSTRATES:

a) Timber substructure work shall be to NZS 3604:2011, Section 10- ROOFS, or to specific design, meeting NZBC B1 and B2 requirements. Purlin (roof batten) size and spacing and sarking/sheet substrates to approval in writing by covering manufacturer and be to NZS 3602.

3. ROOFING UNDERLAY/CLOSING IN WORK:

a) Fix gutters and downpipes (even if temporary). Fix valleys at least 300mm wide with turned edges and base projecting into gutters.

b) Unless otherwise stated, fix breather type building paper ex NZS 2295 to recommendations of roof covering manufacturer. Properly support, lap, turn up at up-stands and projections through roof and turn down into gutter.

4. PREPARATORY WORK:

The roof covering FIXER shall co-ordinate preparatory and installation aspects with plumber (see clauses 1 and 5) and contractor to ensure the following: -

a) Temporary bracing of roof and walls below if some stacking of covering is required; keeping loads on timber to a minimum and not localised on too few members.

b) Good in-plane alignment of purlins and/or sarking and adequate support and fixings for all ridging, capping and over flashing and at all projections through the roof.

c) Neat setting out of work to all roof planes; avoiding any covering or flashing being cut too short, too narrow or in any manner that will prevent secure fixing and long term resistance to rain penetration. Tile, slate and shingle work to be set out to give a full course both at eaves and ridges.

RECEIVED 12/12/2022

Bcon22/0752 - WDC Approved Plans - 17/01/2023

d) Corrosion protection is given to galvanised steel where difficult to paint after fixing. E.g. prime and top coat laps in the roof covering and where lapped by capping and flashing. Also to bottom underside at projections over gutters.

5. INSTALLATION:

The roof covering FIXER shall follow all relevant recommendations of the covering manufacturer and preferably be approved by the manufacturer. Roof flashing and drainage work shall be of a quality expected of work done by Craftsmen/ Registered plumbers - whether or not the Contractor or Fixer employs a plumber to do or supervise the work.

(a) FIXER, plumber and others to wear soft-soled shoes to prevent damage to pre-finished metal, membrane and any special brush, spray or trowel applied coverings.

(b) Fixing of coverings, accessories and flashing shall allow for differential movement. Lapse or joints shall where possible face away from the prevailing winds. SEALANTS SHALL NOT BE USED EXCEPT WHERE PRIOR APPROVED.

(c) Take care of all roofing materials. Any damaged at time of delivery or during construction to be removed from site. Colour match making good of face fixings and minor damage. Each day remove rivet stems, metal scraps and debris from roof and any runs from soldering flux.

6. ROOF PLUMBING AND DRAINAGE:

a) Arrange with Contractor to fix valley gutter (if any), normal gutters (or spouting) and downpipes for earliest possible closing in of the building.

b) Sizing of gutters/spouting and downpipes and downpipe spacing shall accord with Acceptable Solution E1/AS1 -SURFACE WATER.

c) Rainwater collected from roofing shall discharge into surface water drains connecting to a Territorial Authority system (Not into a FOUL WATER DRAIN unless approved by the TA)

7. ON COMPLETION:

Remove all traces of flux after brazing or soldering, swarf, snapped rived stems, metal wastes and other debris from roof surfaces and gutters.

* EXTERNAL WALL COVERINGS

1. GENERAL:

Accord with all Clauses under Preliminary and General where they apply to work and materials shown on the drawings.

RECEIVED 12/12/2022

Bcon22/0752 - WDC Approved Plans - 17/01/2023

2. MAIN AREAS:

The main areas of walling shall consist of weatherboards (existing) and new stria wall cladding.

3. WORKMANSHIP:

The Contractor/carpenter shall straighten all studs and nogs in external walls to the satisfaction of the Owner and the Cladding Fixer and Wall Lining Fixer before fixing any building paper, bracing panels, (sheathings rigid backings). All to tolerances gave in Table 2.1 of NZS 3604:2011.

4. FIXING AND FINISHING OF WALL CLADDING:

Refer to Section 11 of NZS 3604:2011. Procure and accord with NZ Standards and Manufacturers instructions relating to the types of cladding shown on the drawings and specified above.

5. ON COMPLETION:

Leave all work and adjoining surfaces in a clean, stain free state and remove all rubbish.

* INTERNAL WALL LININGS

1. GENERAL:

Accord with all relevant Preliminary and General where they apply to work and materials shown on the drawings. Linings to be fixed after plumber has set out pipe runs and set location on taps etc and after electrical wiring has been run to power and lighting outlets.

2. MATERIALS:

The wall linings shall be gib plasterboard.

4. FIXING AND FINISHING OF WALL LININGS:

Refer to Section 12 - WALL LININGS in NZS 3604:2011. Procure and accord with NZ Standards and manufacturers instructions relating to the types of lining shown on the drawings and specified above.

5. ON COMPLETION:

Leave all work and adjoining surfaces in a clean, stain free state and remove all rubbish.

RECEIVED 12/12/2022

Bcon22/0752 - WDC Approved Plans - 17/01/2023

* DRAINLAYING

1. *EXTENT OF WORK:*

Work in this section of the contract comprises all surface and foul water drainage up to above ground level to connect to Plumber's work. Include all PVC drainage pipes and special fittings, construction of manholes, all gully traps and connections for terminal vents, soil and waste pipes. The Drainlayer shall confer with the Plumber and shall arrange with the Contractor before the foundations are laid to fix the exact position of all connections of wastes and drains.

2. *DOCUMENTS:*

NZBC	B1 / AS1	Structure – general
NZBC	E1 / AS1	Surface water
NZBC	G13 / ASI and AS2	Foul Water
AS/NZS 3500	National plumbing and drainage code	
	3500.3: Storm water drainage	
NZS 7643	Installation of unplasticized PVC pipe systems	
AS/NZS 1260 & 1254	Unplasticized PVC sewer and drain pipe fittings	

3. *DRAIN TRENCHES:*

The excavation of trenches for drains shall be accurately made with base clear and true to grade so that no unnecessary filling is required. Adequate width shall be allowed in accordance with depth of drain to enable laying and jointing to be properly carried out. Trenches shall be kept firm and dry and shall be opened up only in lengths that can be protected, utilised and refilled within a reasonable time.

4. *LAYING OF DRAINS:*

All drains to be adequately supported by firm trench bottom with additional pocket excavations to avoid sockets etc bearing on the ground.

5. *FITTINGS:*

The plans show the layout of the system. Additional fittings that are normally required such as inspection points and inspection bends etc that may be required but are not specifically shown must be allowed for by the Drainlayer to comply with normal practice under the regulations or special requirement of the NZBC.

6. *FALL IN DRAINS:*

The whole of the soil and stormwater drains is to be laid to a regular and even fall.

7. *GULLY TRAPS:*

Supply all gully traps and securely bed and build up with 5:1 concrete surround, 150mm above finished ground levels. Form large and deep dishing and trowel smooth. All gully traps are to be fitted with large gratings and also a grating or perforated plate above the wastes discharging into it.

RECEIVED 12/12/2022

Bcon22/0752 - WDC Approved Plans - 17/01/2023

8. SEWER AND STORM WATER CONNECTIONS:

Connect sanitary sewer to existing drain sewer line and storm water to existing soak hole.

* SANITARY WARE / FITTINGS

1. GENERAL:

Accord with Preliminary and General clauses applying to this section and means of compliance to relevant NZBC requirements.

2. SCOPE:

This section consists of the supply of materials and labour involved in installing the whole of the water and drainage reticulation and metal flashing to leave the building plumbing systems and stormwater complete and working and the building watertight. See roofing section for roof flashing and roof plumbing.

3. DOCUMENTS:

The sanitary plumber shall be a Craftsman/Registered Plumber and may also be a Registered Drainlayer. He shall accord with the following: -

All work shall be carried out in accordance with the New Zealand Building Code 2004, and its amendments, with the local by-laws and with the relevant clauses of the Acceptable Solutions shall form part of this specification.

NZBC	B1/AS1	Structure – general
NZBC	E1/AS1	Surface water
AS/NZS 1260	PVC pipes and fittings for drain, waster and vent applications	
AS/NZS 3500	National plumbing and drainage code 3500.3: Stormwater drainage	
AS/NZS 1260:2002	Unplasticised PVC waste and ventilating pipe, fittings and accessories.	
AS/NZS 1477:1996	Unplasticised PVC pipes for cold water services.	
AS/NZS 1260 & 1254	Unplasticized PVC sewer and drain pipe and fittings.	

4. MATERIALS:

All materials and fittings shall be the best of their respective kinds.
All cold water piping may be unplasticised PVC or polybutylene.
All hot water piping may be copper or polybutylene.
All wastes, soil and vent pipes may be unplasticised PVC

5. WORKMANSHIP:

All work shall be in accordance with best trade practice. All runs shall be in straight lines with minimum bends and junctions.

RECEIVED 12/12/2022

Bcon22/0752 - WDC Approved Plans - 17/01/2023

All copper bends shall be either easy pipe bends or preformed elbows braze jointed. (Elbows shall be restricted to an absolute minimum.)

All pipework shall be concealed in concrete floor, framing or ceiling cavity.

Any pipework set into concrete shall be polybutylene and must be fully lagged with Denso tape or similar to allow for thermal and mechanical movement.

6. PIPES AND SIZES:

As a minimum requirement all individual fittings e.g. cisterns, sinks, basins etc. shall have a 12mm connection – cold (and hot where applicable).

Where fittings are grouped together 20mm branch supply (hot and cold) will be taken to each group with 12mm connections made.

Showers will be connected to branch lines independent of other fittings with their supply taken as directly as possible from either the water heater or the cold supply source.

Provide piped reticulation to all fittings shown in cold supply; and hot where applicable from water heater.

7. WASTES:

Provide U/PVC wastes from all fittings to gully traps as shown either to sizes given or to comply with standards. Over-length wastes to be oversized in diameter and to be fitted with screw cap cleaning eye and breather pipe mounted 2m up wall.
All wastes to be turned down into gullys – under grates (maximum of 4 per gully).

8. VENTS:

Provide all terminal vents to drains and back vents to fittings, from U/PVC, to comply with standards.

All back vent pipes to be run in wall cavities and project above roof.
All terminal vents to be neatly clipped to exterior of wall where shown. Terminate with perforated PVC flush end cap.

9. FITTINGS:

Provide and install all fittings shown on drawings and/or scheduled. Connect all water supplies pipes, wastes and taps and valves and leave complete in working order.

10. HOT WATER SYSTEM:

Water heating shall be new Rinnai Gas Infinity A24 water heaters.

RECEIVED 12/12/2022

Bcon22/0752 - WDC Approved Plans - 17/01/2023

* ELECTRICAL

1. FEES:

Pay all fees and charges and obtain all necessary permits for this trade.

2. MATERIALS AND WORKMANSHIP:

All materials used under this contract shall be to approve New Zealand or overseas Standards. Allow for materials necessary to complete the Contract, whether specified or not. All work shall be carried out by a Registered Electrician holding a current practice licence in accordance with regulations and best trade practice and in a manner which will cause minimum inconvenience to other workmen and the work as a whole. Do all cutting away, drilling etc and with timber cut the minimum only for the entry of cables.

3. MAINS SUPPLY:

Arrange with the Electric Supply Authority, allow for and pay all fees for the connection of underground supply to the residence. Visit site to assess costs of obtaining supply, before submitting a tender for the work.

4. MAIN SWITCHBOARD:

Provide and install in recess main switchboard complete with all necessary control and auxiliary equipment.

5. WIRING:

a) Run new 2 and 3 core TPS cable for sub-circuit wiring to lights, power outlets, switches and for installation of appliances shown in the house drawings and/or in the Electrical Fittings, Fixtures and Appliances Schedule.

b) Locate cable runs in centres of timber framing members so that nailing or screwing of linings can be done without damaging cables. Holes made should be just sufficient in size to pull cables through - not adversely affect the strength of the framing.

c) Ensure wiring is to locations agreed with Owner without fouling installations by other trades e.g.: to required mounting height of switches and power outlets above floor level or above work tops and to required alignment of lights along and across ceilings.

6. SCHEDULE ITEMS:

Provide and install all goods in the ELECTRICAL SCHEDULE, except where it is indicated that the Owner or others shall supply.

RECEIVED 12/12/2022

Bcon22/0752 - WDC Approved Plans - 17/01/2023

GAS FITTING

1. GENERAL:

Comply with preliminary and general.

The whole of the works shall be carried out in accordance with the bylaws and regulations of the local authority. Co-operate with other trades.

2. SET OUT:

Set out the whole of the work for this trade to conform with the layout and overall dimensions of the job or as otherwise required.

3. EXTENT OF WORK:

Install, and connect to the existing reticulation, complete with all necessary flues, shields, control valves and accessories necessary for the safe and proper functioning of the unit.

RECEIVED 12/12/2022

Bcon22/0752 - WDC Approved Plans - 17/01/2023

Stria™ CLADDING | JH™



Timber Cavity Batten Technical Specification

MARCH 2017 | NEW ZEALAND

RECEIVED 12/12/2022

Bcon22/0752 - WDC Approved Plans - 17/01/2023

Contents

1 APPLICATION AND SCOPE 3
1.1 Application 3
1.2 Scope 3
1.3 Details 3
1.4 Specific design 3
2 DESIGN 3
2.1 Compliance 3
2.2 Responsibility 3
2.3 Site and foundation 3
2.4 Surface clearances 3
2.5 Moisture management 4
2.6 Structure 4
2.7 Fire rated walls 4
2.8 Structural bracing 4
2.9 Energy efficiency 4
3 FRAMING 5
3.1 General 5
3.2 Timber framing 5
3.3 Steel framing 5
3.4 Special framing requirements 5
3.5 Tolerances 5
4 PREPARATION 5
4.1 Flexible underlay / HomeRAB™ Pre-Cladding 5
4.2 RAB™ Board 5
4.3 Cavity closure / vent strip 6
4.4 Cavity battens 6
4.5 Intermediate support 6
4.6 Flashings 6
4.7 Junctions and penetrations 6
5 STRIA CLADDING INSTALLATION 6
5.1 General 6
5.2 Fastener durability 6
5.3 Fastener – size and layout 7
6 JOINTS 8
6.1 Vertical joint 7
6.2 Horizontal joint 7
6.3 Drainage joint 7
6.4 Internal corner joint 7
6.5 External corner joint 7
7 FINISHES 7
7.1 Preparation 7
7.2 Painting 7
7.3 Flexible sealant 8
8 STORAGE AND HANDLING 8
9 MAINTENANCE 8
10 PRODUCT INFORMATION 8
10.1 Manufacturing and classification 8
10.2 Product mass 8
10.3 Durability 8
11 SAFE WORKING PRACTICES 9
12 PRODUCT AND ACCESSORIES 11
13 DETAILS 13
PRODUCT WARRANTY 43

RECEIVED 12/12/2022

WE VALUE YOUR FEEDBACK

To continue with the development of our products and systems, we value your input. Please send any suggestions, including your name, contact details, and relevant sketches to:

Ask James Hardie™
literaturefeedback@jameshardie.co.nz

Bcon22/0752 - WDC Approved Plans - 17/01/2023

1 Application and scope

1.1 APPLICATION

Stria™ Cladding installed as per this specification gives a panelised plastered masonry appearance on building facades. Stria Cladding can be fixed to either timber or lightweight steel-framed external walls. A wide range of colours can be used varying from light to dark. Stria Cladding is available in 405mm wide x 4200mm lengths and is 14mm thick.

If you are a specifier
Or other responsible party for a project ensure that the information in this document is appropriate for the application you are planning and that you undertake specific design and detailing for areas which fall outside the scope of these specifications.

If you are an installer
Ensure that you follow the design, moisture management principles, associated figures and material selection provided by the designer and this James Hardie Technical Specification. All the details provided in this document must be read in conjunction with the project specification.

Make sure your information is up to date
When specifying or installing James Hardie products, ensure that you have the current manual. Additional installation information, warranties and warnings are available at www.jameshardie.co.nz or Ask James Hardie™ on 0800 808 868.

1.2 SCOPE

This specification covers the installation of Stria Cladding fixed over timber cavity battens on buildings that fall within the scope limitation of NZS 3604 and E2/AS1 of the New Zealand Building Code (NZBC).

This specification also covers the installation of Stria Cladding on projects, which are subject to specific engineering design (SED) up to a wind pressure of 2.5kPa (ULS).

Note: Refer to Stria Cladding CLD Structural Cavity Batten technical specification when fixing to CLD Structural Cavity Battens.

1.3 DETAILS

Various typical Stria Cladding construction details are provided in the Details section of this document. These details are available in dwg, dxf, jpg and pdf file format and can be downloaded from our website at www.jameshardie.co.nz.

All dimensions shown are in millimetres unless noted otherwise.

1.4 SPECIFIC DESIGN

For use of the Stria Cladding on specific design projects, the designer, architect or engineer must ensure that all clauses of NZBC have been considered and a specific design has been undertaken for the areas which fall outside the scope of this literature.

2 Design

2.1 COMPLIANCE

Stria Cladding installed in accordance with this specification has been tested as per E2/VM1 and complies with External Moisture - E2 Clause of the NZBC. The cladding has also been tested and complies with the requirements of Structure - B1, Durability - B2, Energy Efficiency - H1 and Hazardous Building Material - F2 Clauses of the NZBC.

2.2 RESPONSIBILITY

The specifier or other party responsible for the project must ensure that the information and details in this specification are appropriate for the intended application and that additional detailing is performed for specific design or any areas that fall outside the scope of this technical specification. For applications outside the scope of this literature and details, which are not provided herein, the architect, designer or engineer must undertake specific design and it should be ensured that the intent of their design meets the requirements of the NZBC.

All New Zealand Standards referenced in this manual are current editions and must be complied with.

James Hardie conducts stringent quality checks to ensure that any product manufactured falls within our quality spectrum. It is the responsibility of the builder to ensure that the product meets aesthetic requirements before installation. James Hardie will not be responsible for rectifying obvious aesthetic surface variations following installation.

2.3 SITE AND FOUNDATION

The site on which the building is situated must comply with E1/AS1 Surface Water Clause of NZBC.

Foundations design must comply with relevant regulations, standards and meet the requirements of NZBC.

The grade of adjacent finished ground must slope away from the building to avoid any possibility of water accumulation.

2.4 SURFACE CLEARANCES

The clearance between the bottom edge and paved/unpaved ground of cladding must comply with section 9.1.3 of E2/AS1. The finished floor must also comply with these requirements. These clearances must be maintained throughout the life of the building.

Stria Cladding must overhang the bottom plate by a minimum of 50mm as required by E2/AS1.

Stria Cladding must maintain a minimum clearance of 100mm from paved ground, and 175mm from unpaved ground.
On roofs and decks, the minimum clearance must be 50mm.

Do not install external cladding such that it may remain in contact with water or ground. Refer Figures 4 and 5.

RECEIVED 12/12/2022

Bcon22/0752 - WDC Approved Plans - 17/01/2023

2.5 MOISTURE MANAGEMENT

It is the responsibility of the specifier to identify moisture related risks associated with any particular building design.

Wall construction design must effectively manage moisture, considering both interior and exterior environments of the building, particularly in buildings that have a higher risk of wind driven rain penetration. The buildings should also be ventilated sufficiently to control moisture accumulation due to condensation especially in artificially cooled/heated buildings.

Walls shall include those provisions as required by External Moisture Clause E2/AS1 of NZBC. In addition, all wall openings, penetrations, junctions, connections, window sills, heads and jambs must incorporate appropriate flashings for waterproofing. The other materials, components and installation methods used to manage moisture in external walls, must comply with the requirements of relevant standards and the NZBC. For further guidance on designing for weather tightness, refer to BRANZ Ltd. and the Department of Building and Housing updates on the following websites respectively, www.branz.co.nz and www.dbh.govt.nz.

In addition, the following issues must also be considered:

- Sealant must be installed where detailed in this literature.
- Where the walls are higher than two storeys, it is necessary to provide a horizontal flashing at the second floor level to drain the cavity.
- The installation of smoke chimneys, pipe penetrations and other fixtures etc. must not track moisture into the wall or restrict the drainage of moisture to the exterior.

2.6 STRUCTURE

2.6.1 Timber Framing

Timber-framed buildings must either be in accordance with NZS 3604 (Timber Framed Buildings) or designed as per specific engineering design. For a building requiring a specific engineering design, the framing stiffness must be equivalent to or more than the stiffness requirements of NZS 3604.

For specific design projects, the timber framing must be designed in accordance with the requirements of NZS 3603 and AS/NZS 1170.

For timber frame walls longer than 12m, it is best practice to allow for construction joints to accommodate movements generated due to timber shrinkage or deflections etc.

2.6.2 Steel Framing

Steel-framed buildings must comply with the requirements of AS/NZS 3404 ‘Steel Structures Standard’ or specific engineering design requirements. Also refer to NASH 3405 steel framed buildings guidance document published by ‘National Association of Steel Housing’ (NASH).

2.6.3 Wind Pressures

Stria Cladding is suitable for use in all wind zones in New Zealand up to and including EH as defined in NZS 3604.

Stria Cladding is also suitable in specific design projects up to wind pressures of 2.5kPa ULS.

2.7 FIRE RATED WALLS

Stria Cladding when fixed over timber cavity battens to external walls can achieve fire ratings up to 60/60/60 to comply with Clause C/AS1 of the NZBC when the walls are constructed in accordance with the current James Hardie ‘Fire and Acoustic’ Design Manual.

Stria Cladding is classified as a 'non-combustible' material suitable for use on walls close to a boundary.

2.8 STRUCTURAL BRACING

Stria Cladding installed as per this specification cannot be used to achieve any structural bracing. However, bracing can be achieved by using James Hardie rigid air barrier installed direct to framing instead of a building underlay or by using Villaboard™ Lining bracing system on the internal face.

2.9 ENERGY EFFICIENCY

External walls constructed as per this technical specification using Stria Cladding and bulk insulation, where the area of glazing is 30% or less of the total wall area, tcomplies with the insulation requirements for walls in NZBC Acceptable Solution H1/AS1 (Energy Efficiency Clause H1), Replacement Table 1. To meet thermal insulation requirements for the construction, the bulk insulation as specified in Table 1 must be used. This insulation may be substituted with insulations having higher R-values. The thermal insulation of a wall changes when the size or spacing of timber framing is increased or decreased. The calculation used in Table 1 is based on a timber framing size 90 x 45mm and using an internal lining material such as James Hardie Villaboard Lining or a 10mm plasterboard.

Table 1

Insulation capability		
Climate Zone*	**R-Value Requirement***	**Cavity Insulation Infill Requirement**
1 and 2	1.9 m^2 °C/W	#R2.0
3	2.0 m^2 °C/W	#R2.2

Total construction R-Value depends on the insulation material used and the framing ratio. The insulation material R-Values specified in this table are for studs spaced at 600mm c/c and nogs spaced at 800mm c/c.

To achieve higher R-Values of construction the wall insulation material must be replaced with an insulation material having higher R-Values to suit the requirements.

For further guidance on insulation requirement refer to the current edition of ‘House Insulation Guide’ published by BRANZ.

RECEIVED 12/12/2022

Bcon22/0752 - WDC Approved Plans - 17/01/2023

3 Framing

3.1 GENERAL

Stria Cladding can be fixed either to a timber-frame or steel-frame.

For fixing into steel frame Ask James Hardie on 0800 808 868 for specific requirements.

- Studs must be provided at 600mm centrs maximum.
- Nogs must be provided at 800mm centres maximum.

Note: For fixing Stria Cladding, fastener spacing is provided in Section 5.

3.2 TIMBER FRAMING

3.2.1 Dimensions

A 45 x 90mm minimum framing size is required.

A minimum 70mm wide stud is required at vertical joint flashing joints.

3.2.2 Structural Grade

Timber grade used must be in accordance with timber grades specified in NZS 3604.

3.2.3 Durability

The external framing timber must be treated to a minimum H1.2 treatment. Higher treatment levels may be used but check for the compatibility of treatment chemicals with other materials. Refer to NZBC Acceptable Solution B2/AS1 Durability for further information about the durability requirements.

For timber treatment and allowable moisture content information refer to NZS 3602 (Timber and Wood-Based Products for use in Buildings) and NZS 3640 (Chemical Preservation of Round Sawn Timber) for minimum timber treatment selection and treatment requirements.

Also refer to framing manufacturer's literature for further guidance on timber selection. Framing must be protected from moisture at sites in accordance with the framing manufacturer recommendations.

Note: Refer to NZS 3602 for information about the allowable moisture content in timber framing.

3.2.4 Frame Construction

Use of timber framing must be in accordance with NZS 3604 and the framing manufacturer's specifications. The framing must be rigid and not rely on the cladding for stability. Timber framing sizes and its set-out must comply with NZS 3604 and as specified in this technical specification.

The following framing is required:

- Studs must be provided at 600mm centres maximum.
- Nogs must be provided at 800mm centres maximum.
- When studs are spaced at 400mm centres then the nogs / dwangs may be provided at 1200mm centres
- An extra stud is required in internal corners
- For specific design projects exposed to wind speeds higher than 50m/sec, the stud spacing must be closed to 400mm c/c.

In case of gable and trusses sitting on top plates of external wall frame, the frame size must comply with the minimum timber sizes stipulated for wall frames in section 8 of the NZS 3604.

3.3 STEEL FRAMING

Refer to James Hardie Steel Frame technical specification about the installation of Stria Cladding to steel frame.

3.4 SPECIAL FRAMING REQUIREMENTS

The following are special framing requirements for both timber and steel framing:

- Double studs are required at internal corners, refer Figure 15.
- Extra packers maybe required at external corners.

3.5 TOLERANCES

In order to achieve the required performance and an acceptable wall finish, it is imperative that framing is straight and true. Framing tolerances shall comply with Table 2.1 of NZS 3604 and the manufacturer's specifications. All framing shall be made flush.

4 Preparation

4.1 FLEXIBLE UNDERLAY / HOMERAB PRE-CLADDING

Flexible underlay / HomeRAB™ Pre-Cladding must be provided as per the requirements of External Moisture Clause E2 of NZBC. The flexible underlay selected for use must comply with Table 23 of E2/AS1.

The flexible underlay must be fixed in accordance with section 9.1.7 E2/AS1 and underlay manufacturer's recommendations.

Walls which are not lined on the inside face e.g. garage walls or gable ends must include a rigid sheathing or an air barrier behind the cladding which complies with Table 23 of E2/AS1. HomeRAB Pre-Cladding complies with these requirements and is suitable for use in this situation. It must be installed in accordance with James Hardie Rigid Air Barriers installation manual.

4.2 RAB BOARD

General building underlay or HomeRAB Pre-Cladding is suitable for use up to very high wind speed zone (50m/sec).

When an EH windzone or for specific design projects where the wind pressure is higher than 1.5kPa, RAB™ Board must be used instead of building underlay.

To achieve the temporary weathertightness using James Hardie rigid air barriers, windows/doors need to be temporarily installed. Refer to James Hardie Rigid Air Barriers installation manual for information regarding its installation.

RECEIVED 12/12/2022

Bcon22/0752 - WDC Approved Plans - 17/01/2023

4.3 CAVITY CLOSURE / VENT STRIP

The James Hardie Stria Aluminium Cavity Closure or uPVC cavity vent strip must be installed at the bottom of all walls and above all openings constructed using the drained and ventilated cavity construction method. It is important that the openings in the cavity closure/vent strip are kept clear and unobstructed to allow free drainage and ventilation of cavities. James Hardie cavity closure / vent strip has an opening area of 1000mm^2/m length.

4.4 CAVITY BATTENS

Stria Cladding to be installed on a cavity. The battens provide ventilation and drainage between the frame and the panel and are considered a “packer” only in this specification.

The timber cavity battens must be minimum H3.1 treated in accordance with NZS 3640 (Chemical preservation of rough and sawn timber) to comply with the durability requirements of B2/AS1.

Cavity battens must comply with E2/AS1 and:

- be minimum 18mm thick
- be as wide as the width of studs
- fixed vertically to studs
- must be fixed by the cladding fixings to the main framing over the building underlay. Therefore until claddings are fixed the battens only need to be tacked to framing by 40 x 2.8mm or longer nails at 800mm c/c.

4.5 INTERMEDIATE SUPPORT

Where studs are at 600mm centres an intermediate means of restraining the building underlay and insulation from bulging into the cavity shall be installed. An acceptable method to achieve this is using one of the following options:

- intermediate cavity batten between the studs; or
- 75mm galvanised mesh; or
- polypropylene tape at 300mm centres fixed horizontally and drawn taut

No intermediate supports are required:

- when studs are spaced at 400mm centres; or
- when rigid air barriers instead of building underlays are used.

4.6 FLASHINGS

All wall openings, penetrations, intersections, connections, window sills, heads and jambs must be flashed prior to Stria Cladding installation. Refer to moisture management requirements in Clause 2.5. The building underlay/rigid air barrier must be appropriately incorporated with penetration and junction flashings using flashing tapes. Materials must be lapped in such a way that water tracks down to the exterior on the face of building underlay or rigid air barrier. James Hardie will assume no responsibility for water infiltration within the wall due to poor installation of flashings or building underlay.

The selected flashing materials must comply with the durability requirements of NZBC. For information refer to Table 20 of E2/AS1.

When using James Hardie rigid air barriers the entire framing around openings must be sealed with a flashing tape. The tape must be finished over the face of the rigid air barrier. Refer to James Hardie Rigid Air Barriers installation manual for further information.

4.7 JUNCTIONS AND PENETRATIONS

Refer to Clause 2.5 of this specification for moisture management requirements. All windows and doors must be detailed as per the requirements of this specification. James Hardie has developed the window details for Stria Cladding which meet the requirements of E2 External Moisture, an approved document of the NZBC. Refer to Figures 17 to 19.

5 Stria Cladding installation

5.1 GENERAL

Stria Cladding is installed horizontally using the cavity construction method as per the details and information published in this document. Stria Cladding panels are 405mm wide and are installed with a 25mm nominal lap over the next panel. Considering the installation and machining variations, the effective cover for Stria Cladding can vary between 380-382mm.

Stria Cladding must be kept under cover whilst in storage or at sites and they must be dry at the time of their installation. All site cut panel edges must be sealed with Dulux 1 Step, Resene Quick Dry, Taubmans Underproof Acrylic Primer Undercoat or similar sealer compatible with the finish coat before installation.

Stria Cladding must be fully supported and fixed through timber cavity battens. Ensure that cladding is hard against the battens to avoid drumminess before fixing.

To achieve best asthetic results it is recommended to position vertical jointer by the corner of openings or coinciding with the centre line of openings. Refer to Figure 3

This technical specification only covers the horizontal installation of Stria Cladding. For vertical installation refer to the Stria Cladding vertical installation technical specification.

5.2 FASTENER DURABILITY

Fasteners must meet the minimum durability requirements of the NZBC. NZS 3604 specifies the requirements for fixing material to be used in relation to exposure conditions and are summarised in Table 2.

RECEIVED 12/12/2022

Bcon22/0752 - WDC Approved Plans - 17/01/2023

6 Joints

Table 2

Exposure conditions and nail selection prescribed by NZS 3604		
NAIL MATERIAL		
Zone D	Zone C outside sea spay zone and Zone B and geothermal hot spots	Bracing - all zones
Grade 316 Stainless	Hot-dipped galvanised or 316 Stainless	Grade 316 Stainless

*(Zone C areas where local knowledge dictates that increased durability is required, appropriate selection shall be made). Microclimate conditions as detailed in NZS 3604, Paragraph 4.2.4 require SED.

Also refer to the NZBC Acceptable Solution E2/AS1' Table 20 and 21 for information regarding the selection of suitable fixing materials and their compatibility with other materials.

5.3 FASTENER – SIZE AND LAYOUT

Stria Cladding must be fixed to framing using the fixings as specified in Table 3 below and follow the edge distance required for nails as shown in the details. Refer to Figure 7.

When using rigid air barrier like HomeRAB Pre-Cladding or RAB Board, the cladding fixing nails must be increased in length equal to the thickness of the rigid air barrier.

Table 3

Panel fixing up to and including VH wind zone	
Cavity construction over flexible underlay	
65x2.87mm D head or 60x2.87mm RounDrive nails	Fix nails at 100mm from top edge and 100mm from bottom edge/per board/ per stud. Refer to Figure 12
Panel fixing up to and including VH wind zone cavity construction over HomeRAB Pre-Cladding / RAB Board	
75x3.06mm D head or 75x3.15mm RounDrive nails	Fix nails at 100mm from top edge and 100mm from bottom edge/per board/ per stud. Refer to Figure 12
Panel fixing EH wind zone and SED projects cavity construction over RAB Board	
75x3.06mm D head or 75x3.15mm RounDrive nails	Fix nails at 100mm from top edge and 100mm from bottom edge/per board/ per stud. Refer to Figure 12

For other fixing options Ask James Hardie on 0800 808 868.

- When fixing the panels using nail guns, refer to the nail gun manufacturer for information about nails and the type of nail gun to be used.
- Stud width of 70mm min required when using a vertical joint flashing. Refer Figure 9.
- D head nails - finish nails 2mm below panel surface.
- RounDrive nails - finish nails flush with panel surface.

6.1 VERTICAL JOINT

Stria Cladding can be jointed using vertical joint flashing, trimline joint flashing or a butt joint. Refer to Figures 7 to 11.

A single stud is required when using trimline joint flashing. Refer to Figure 7. Double studs are required when using vertical joint flashing. Refer Figure 9.

6.2 HORIZONTAL JOINT

Stria Cladding panels are lapped over each other as per Figure 12. There is a minimum 25mm lap between the two panels. Ensure that Stria Cladding panels are securely interlocked before nailing. Stria Cladding can run continuous over floor joists without any horizontal joint when LVL timber floor joists are used. Refer to Figure 28.

When an engineered joist or LVL joist is not used, a horizontal joint or a movement joint must be formed at floor joist, refer to Figures 25 and 26.

6.3 DRAINAGE JOINT

After every two floors a horizontal drainage joint flashing is required, refer to Figure 26.

6.4 EXTERNAL CORNER JOINT

An external box corner flashing is used to fix the external corners, refer to Figure 13 and 14.

6.5 INTERNAL CORNER JOINT

An internal corner flashing is to be used to form an internal corner joint, refer to Figure 15. Alternatively an internal mitre corner, refer to Figure 16.

An extra stud is required in internal corners.

Note: All joint mouldings to be fixed at 400mm centres both sides.

7 Finishes

7.1 PREPARATION

The D head nail heads must be finished 2mm below the panel surface. The nail holes must be filled with an exterior grade two part builders fill, ie. CRC Builders Fill or similar two part external grade filler. The RounDrive nail heads must finish flush with panel surface.

7.2 PAINTING

Stria Cladding is pre-primed and is suitable for site applied acrylic paints.

In order to seal cut edges or sanded patches, Dulux 1 Step, Resene Quick Dry, Taubmans Underproof Acrylic Primer Undercoat or a similar product should be applied. The primer should be compatible with the paint to be used.

Painting of Stria Cladding is mandatory to meet the durability requirements of NZBC and 15 year James Hardie product warranty. Stria Cladding must be dry and free of any dust or grime before painting. The panels must be painted within 90 days of their installation. There is no restriction on the LRV of paint to be applied on the Stria Cladding.

RECEIVED 12/12/2022

Bcon22/0752 - WDC Approved Plans - 17/01/2023

James Hardie recommends a minimum of two coats of exterior grade acrylic paint. Follow the paint manufacturer's recommendations to prepare the surface and to adequately cover and conceal the panel fixings.

7.3 FLEXIBLE SEALANT

Sealant used must comply with the relevant requirements of the NZBC. Their application and usage must be in accordance with the manufacturer's instructions. Check with the sealant manufacturer prior to coating over sealant. Some sealant manufacturers do not recommend coating over their product.

8 Storage and handling

Stria Cladding must be laid flat on a smooth level surface. Edges and corners must be protected from chipping.

To ensure optimum performance, store panels under cover and keep dry prior to fixing. If the panels become wet, allow them to dry thoroughly before fixing.

Do not carry panels on the flat, carry in the vertical position to avoid excessive bending.

9 Maintenance

The extent and nature of maintenance required will depend on the geographical location and exposure of the building. It is the responsibility of the specifier to determine normal maintenance requirements to maintain the effectiveness of the cladding.

As a guide, it is recommended that the basic normal maintenance tasks shall include, but not be limited to:

- Washing down exterior surfaces every 6-12 months*
- Re-coating exterior protective finishes**
- Regular inspection and repair if necessary of the cladding, sealants, etc.
- Cleaning out gutters, down pipes and overflow pipes as required.
- Pruning back vegetation which is close to or touching the building as well as ensuring the NZBC ground clearance requirements are maintained especially where gardens are concerned.
- The clearance between the bottom edge of the Stria Cladding and the finished/unfinished ground must always be maintained.

**Do not use a water blaster to wash down the cladding.*
**In extreme coastal conditions or sea spray zones, wash every 3-4 months.*
***Refer to your paint manufacturer for washing down and recoating requirements related to paint performance.*

10 Product information

10.1 MANUFACTURING AND CLASSIFICATION

Stria Cladding is an advanced lightweight cement composite cladding manufactured using James Hardie formulation. Basic composition is Portland cement, ground sand, cellulose fibre and water.

Stria Cladding is manufactured to Australian / New Zealand Standard AS/NZS 2908.2 'Cellulose-Cement Products' (ISO 8336 'Fibre-Cement Flat Sheet').

Stria Cladding is classified Type A, Category 2 in accordance with AS/NZS 2908.2 "Cellulose-Cement Products".

For Safety Data Sheets (SDS) visit www.jameshardie.co.nz or Ask James Hardie on 0800 808 868.

10.2 PRODUCT MASS

Stria Cladding is manufactured in 14.0mm thickness and has a mass of 13.8kg/m^2 at EMC.

Stria Cladding is defined as a Light Weight Wall Cladding (not exceeding 30kg/m^2) as per NZS 3604.

10.3 DURABILITY

Stria Cladding and James Hardie rigid air barrier installed and maintained as per this technical specification will meet the durability requirement for cladding as per Durability B2 clause of the NZBC.

10.3.1 Resistance to Moisture/Rotting

Stria Cladding has tested to check its resistance to permanent moisture induced deterioration (rotting) by passing the following tests in accordance with AS/NZS 2908.2:

- Heat Rain (Clause 6.5).
- Water Permeability (Clause 8.2.2).
- Warm Water (Clause 8.2.4).
- Soak Dry (Clause 8.2.5).

10.3.2 Resistance to fire

Stria Cladding is classified as 'Non-Combustible Material' which is suitable for use as external wall cladding and complies with Performance C3.7 of the NZBC Clause C3 Fire Affecting Areas Beyond the Fire Source.

10.3.3 Alpine Regions

In regions subject to freeze/thaw conditions, Stria Cladding and James Hardie rigid air barrier must not be in direct contact with snow or ice build up for extended periods, e.g. external walls in alpine regions must be protected where snowdrifts over winter are expected.

These products have been tested in accordance with AS/NZS 2908.2 Clause 8.2.3.

RECEIVED 12/12/2022

Bcon22/0752 - WDC Approved Plans - 17/01/2023

11 Safe working practices

STAY HEALTHY WHEN WORKING WITH BUILDING PRODUCTS CONTAINING CRYSTALINE SILICA

Crystalline Silica
What is it? Why and when is it a health hazard?

Crystalline Silica is

- Commonly known as sand or quartz
- Found in many building products e.g. concrete, bricks, grout, wallboard, ceramic tiles, and all fibre cement materials

Why is Crystalline Silica a health hazard?

- Silica can be breathed deep into the lungs when present in the air as a very fine (respirable) dust
- Exposure to silica dust without taking the appropriate safety measures to minimise the amount being breathed in, can lead to a potentially fatal lung disease – silicosis – and has also been linked with other diseases including cancer. Some studies suggest that smoking may increase these risks.
- The most hazardous dust is the dust you cannot see!

When is Crystalline Silica a health hazard?

- It's dangerous to health if safety protocols to control dust are not followed when cutting, drilling or rebating a product containing crystalline silica.
- Products containing silica are harmless if intact (e.g. an un-cut sheet of wall board).

FAILURE TO ADHERE TO OUR WARNINGS, SAFETY DATA SHEETS AND INSTALLATION INSTRUCTIONS WHEN WORKING WITH JAMES HARDIE PRODUCTS MAY LEAD TO SERIOUS PERSONAL INJURY OR DEATH.

AVOID BREATHING IN CRYSTALLINE SILICA DUST!

Safe working practices

- NEVER use a power saw indoors or in a poorly ventilated area
- NEVER dry sweep
- ALWAYS use M Class extractor unit as a minimum and always hose down with water/wet wipe for clean up
- NEVER use grinders
- ALWAYS use a circular sawblade specifically designed to minimise dust creation when cutting fibre cement – preferably a sawblade that carries the HardieBlade™ logo or one with at least equivalent performance.
- ALWAYS follow tool manufacturers' safety recommendations
- ALWAYS expose only the minimum required depth of blade for the thickness of fibre cement to be cut
- ALWAYS wear an approved properly-fitted, approved dust mask (P1 or P2) or respirator

Use one of the following methods based on the required cutting rate:

BEST

- Score and snap knife
- Hand guillotine
- Fibreshear

BETTER

- Dust reducing circular saw equipped with HardieBlade™ Saw Blade and M Class extractor unit.

GOOD

- Dust reducing circular saw with HardieBlade™ Saw Blade

Working outdoors

- Make sure you work in a well ventilated area
- Position cutting station so wind will blow dust away from yourself and others in the working area
- Cut products with either a 'Score or snap' knife or fibre cement shears or, when not feasible, use a HardieBlade™ Saw Blade (or equivalent) and a dust-reducing circular saw attached to a M Class extractor unit
- When sawing, sanding, rebating, drilling or machining fibre cement products, always:
  - Wear your P1 or P2 mask (correctly fitted in accordance with manufacturers' instructions) and when others are close by, ask them to do the same
  - If you are not clean shaven, then use a powered air respirator with a loose fitting head top.
  - Wear safety glasses
  - Wear hearing protection
  - When others are close by, ask them to do the same.

Working indoors

- Never cut using a circular saw indoors
- Position cutting station in a well ventilated area
- Cut ONLY using a score and snap knife, hand guillotine or fibreshears (manual, electric or pneumatic)
- Make sure you clean up BUT never dry sweep. Always hose down with water/wet wipe or use an M Class extractor unit

IF CONCERN STILL EXISTS ABOUT EXPOSURE LEVELS OR YOU DO NOT COMPLY WITH THE ABOVE PRACTICES, YOU SHOULD ALWAYS CONSULT A QUALIFIED INDUSTRIAL HYGIENIST.

RECEIVED 12/12/2022

Bcon22/0752 - WDC Approved Plans - 17/01/2023

Working Instructions

- Refer to Recommended Safe Working Practices before starting any cutting or machining of product.

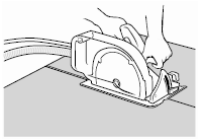

HardieBlade™ Saw Blade

The HardieBlade™ Saw Blade used with a dust-reducing saw is ideal for fast, clean cutting of James Hardie fibre cement products. A dust-reducing saw uses a dust deflector or a dust collector connected to a vacuum system. When sawing, clamp a straight-edge to the sheet as a guide and run the saw base plate along the straight edge when making the cut.

Hole-Forming

For smooth clean cut circular holes:

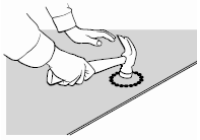

- Mark the centre of the hole on the sheet.
- Pre-drill a 'pilot' hole.
- Using the pilot hole as a guide, cut the hole to the appropriate diameter with a hole saw fitted to a heavy duty electric drill.

For irregular holes:

- Small rectangular or circular holes can be cut by drilling a series of small holes around the perimeter of the hole then tapping out the waste piece from the sheet face.
- Tap carefully to avoid damage to sheets, ensuring that the sheet edges are properly supported.

STORAGE & DELIVERY

Keeping products and people safe

Off loading

- James Hardie products should be off-loaded carefully by hand or by forklift.
- James Hardie products should not be rolled or dumped off a truck during the delivery to the jobsite.

Storage

James Hardie products should be stored:

- in their original packaging
- under cover where possible or otherwise protected with a waterproof covering to keep products dry
- off the ground – either on a pallet or adequately supported on timber or other spacers
- flat so as to minimise bending

James Hardie products must not be stored:

- directly on the ground
- in the open air exposed to the elements

JAMES HARDIE IS NOT RESPONSIBLE FOR DAMAGE DUE TO IMPROPER STORAGE AND HANDLING.

TIPS FOR SAFE AND EASY HANDLING

Weatherboard products

- Do not lift planked products flat and in the middle
- Carry the products on the edge
- If only one person is carrying the product, hold it in the middle and spread arms apart to better support the product
- If two people are carrying the plank, hold it near each end and on edge
- Exercise care when handling weatherboard products to avoid damaging the edges/corners

Sheet products

- Carry with two people
- Hold near each end and on edge
- Exercise care when handling sheet products to avoid damaging the edges/corners

RECEIVED 12/12/2022

Bcon22/0752 - WDC Approved Plans - 17/01/2023

12 Product and accessories

Stria Cladding information

Product	Description	Size (mm)			Code
		Thickness	Length	Width	
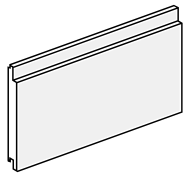	**Stria Cladding** A 14mm profiled panel for expressed jointed residential facades. Factory sealed on all six sides. Each panel has a manila white colour primer applied on its face, which accepts a wide range of paint finishes.	14	4200	405	**404263**
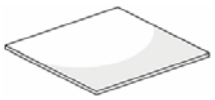	**James Hardie rigid air barrier** Used as a rigid air barrier. It has green colour sealer applied over one face. Installed with green side facing out.	6	2450	1200	**402980**
		6	3000	1200	**402981**
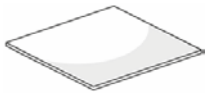	**HomeRAB Pre-Cladding** Used as a rigid air barrier. It has green colour sealer applied over one face. Installed with green side facing out.	4.5	2450	1200	**404766**
		4.5	2750	1200	**404768**

Note: All dimensions and masses provided are approximate only and subject to manufacturing tolerances.

Accessories/tools supplied by James Hardie

Accessories	Description	Size/Quantity	Code
	**Vertical Joint Flashing** Aluminium extrusion used behind cladding at vertical joints.	3000mm long	**305507**
	**Stria Trimline Joint Flashing** Aluminium extrusion used behind cladding at vertical joints.	3000mm long	**305827**
	**Internal Corner Flashing** Anodised aluminium extrusion used to create internal corners.	3000mm long	**304871**
	**Stria External Box Corner** Anodised aluminium extrusion used to create external corners.	2700mm long 4000mm long	**305824** **305823**
	**Aluminium Window Jamb Flashing** Aluminium moulding used beside window opening to end butt the Stria Cladding.	3000mm long	**305430**
	**Stria Aluminium Cavity Closure** Aluminium moulding used as vermin proofing.	3000mm long	**305431**
	**JH 9mm Panel Aluminium External Box Corner** A box corner mould to form the external joints. 9mm etch primed.	2450mm long 2750mm long 3000mm long 4000mm long	**304509** **304510** **305150** **305808**
	**uPVC Vent Strip** PVC moulding used as vermin proofing.	3000mm long	**302490**
Tools			
	**HardieBlade™ Saw Blade** Diamond tip 184mm diameter fibre cement circular saw blade. Spacers not included.	Each	**300660**
	**HardieFlex™ Stainless Steel 316 Nails** For fixing panels through cavity battens. 60 x 3.15mm	5kg box	**302782**
	**HardieFlex™ Hot Dip Galv. Nails** For fixing panels through cavity battens. 60 x 3.15mm	5kg box	**302784**

RECEIVED 12/12/2022

Bcon22/0752 - WDC Approved Plans - 17/01/2023

Accessories/tools not supplied by James Hardie

James Hardie recommends the following products for use in conjunction with Stria Cladding and James Hardie rigid air barrier. James Hardie does not supply these products and does not provide a warranty for their use. Please contact component manufacturer for information on their warranties and further information on their products.

Product	Description
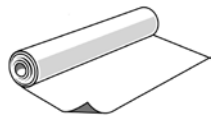	**Building underlay** Must comply with Table 23 of E2/AS1.
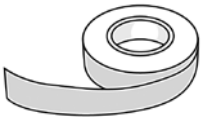	**Flexible Window Opening Flashing Tape** A flexible self-adhesive tape used in preparation of a window. Refer to the window installation section in this manual for more information. e.g. Protecto or Super Stick by Protecto Wrap or 3M™ All Weather Flashing Tape 8067 by 3M™ Protecto: 0800 776 9727 3M™ 0800 474 787
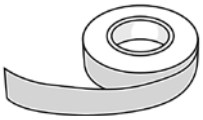	**James Hardie rigid air barrier Vertical Joint Sealing Tape** The tape to be used to seal James Hardie rigid air barrier vertical joints. Super Stick by Protecto Wrap or 3M™ All Weather Flashing Tape 8067 by 3M™ Protecto: 0800 776 9727 3M™ 0800 474 787
	**Flexible Sealant** Required to seal the vertical joints. Bostik Seal N Flex-1, Sikaflex AT Facade, Sikaflex MS or similar.
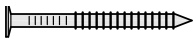	65 x 2.87mm 'D' head nail or 60 x 2.87 RounDrive nail (hot dipped galvanised/stainless steel) For fixing Stria Cladding.
	40 x 2.8mm or longer HardieFlex™ nail. For fixing timber cavity battens and aluminium flashings.
	**Meter Box** Refer Electrical Suppliers.
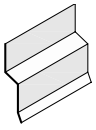	**Head flashing** Required over window heads to be supplied by window installer. Material must comply with Table 20 and 21 of E2/AS1.
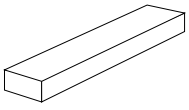	**Timber cavity batten** H3.1 minimum treated Timber cavity batten the cladding is fixed over.
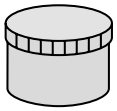	**Exterior grade filler** CRC Builders Fill or similar two part filler to fill over nail holes

RECEIVED 12/12/2022

Bcon22/0752 - WDC Approved Plans - 17/01/2023

13 Details

The following generic details have been provided in this document for cavity construction methods.

Table 5

Details		
Description	**Cavity Construction**	
	Figure No.	**Page No.**
Framing set out	Figure 1	13
Batten fixing set out	Figure 2	14
Stria Cladding layout	Figure 3	15
Foundation detail – option 1	Figure 4	15
Foundation detail – option 2	Figure 5	16
Soffit detail	Figure 6	16
Vertical trimline joint flashing option	Figure 7	17
Vertical trimline joint flashing option	Figure 8	18
Vertical joint flashing option	Figure 9	19
Vertical joint flashing option	Figure 10	20
Vertical butt joint option	Figure 11	21
Fixing detail	Figure 12	22
External aluminium box corner	Figure 13	23
External aluminium box corner (Alternative)	Figure 14	23
Internal aluminium corner	Figure 15	24
Internal mitred corner	Figure 16	24
Window sill	Figure 17	25
Window jamb	Figure 18	25
Window head	Figure 19	26
Stria cutting around sill	Figure 20	27
Stria cutting around head	Figure 21	27
Window head	Figure 22	28
Window head to Stria Cladding cut board	Figure 23	28
Window head	Figure 24	29
Window head with facings	Figure 25	31
Window jamb with facings	Figure 26	32
Window sill with planted sill	Figure 27	32
Trimline Horizontal joint at floor joist	Figure 28	33
Drained flashing joint at floor level	Figure 29	34
Drained flashing joint at floor joist	Figure 30	35
Engineered floor joist	Figure 31	36
Apron flashing detail	Figure 32	36
Parapet flashing	Figure 33	37
Roof to wall junction detail	Figure 34	37
Meter box at sill	Figure 35	38
Meter box at jamb	Figure 36	38
Meter box at head	Figure 37	39
Enclosed deck	Figure 38	39
Garage door head	Figure 39	40
Garage door jamb	Figure 40	40

RECEIVED 12/12/2022

Bcon22/0752 - WDC Approved Plans - 17/01/2023

Figure 1: Framing set out

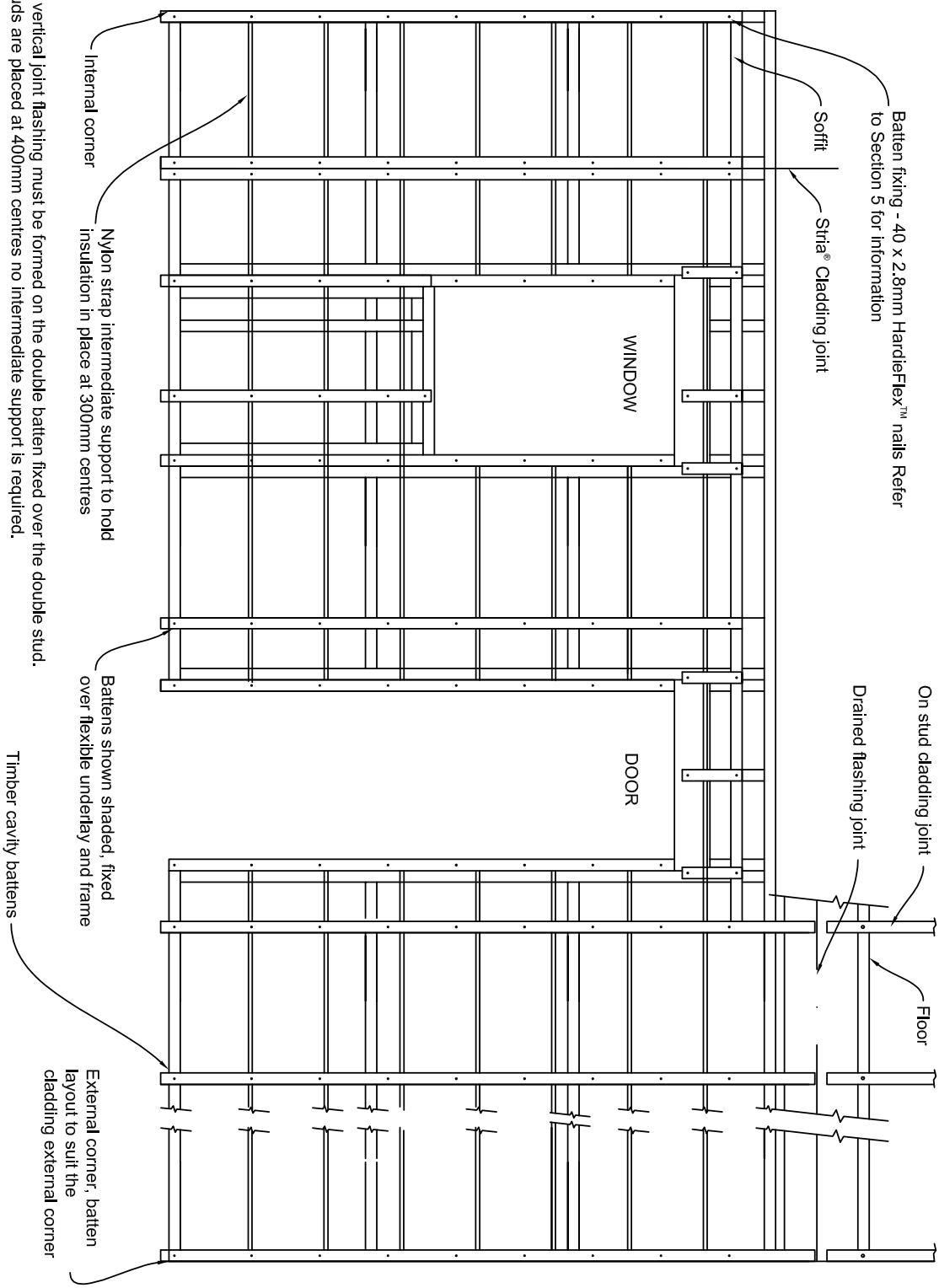

- The vertical joint flashing must be formed on the double batten fixed over the double stud.
- If studs are placed at 400mm centres no intermediate support is required.

RECEIVED 12/12/2022

Bcon22/0752 - WDC Approved Plans - 17/01/2023

Figure 2: Batten fixing set out

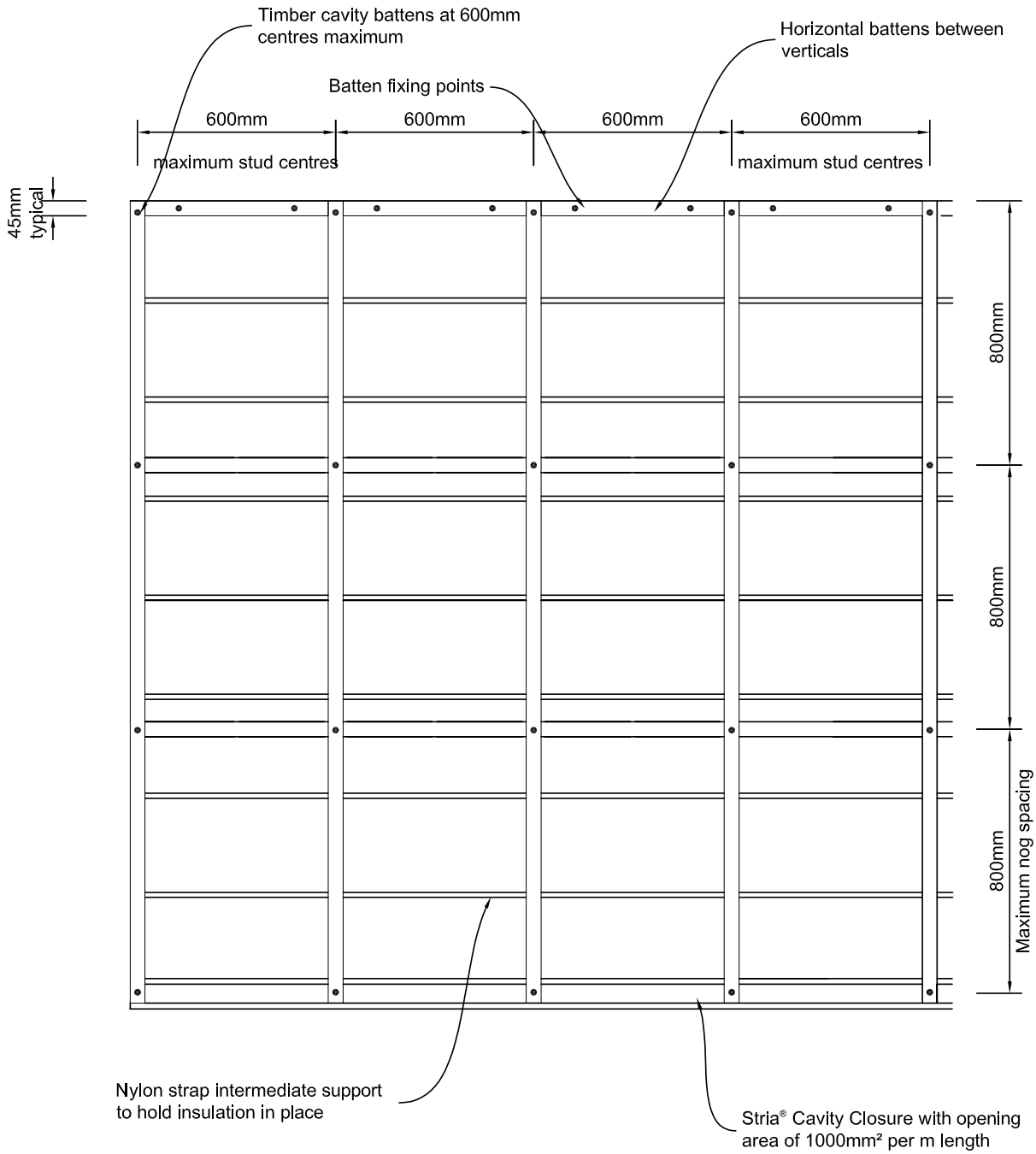

RECEIVED 12/12/2022

Bcon22/0752 - WDC Approved Plans - 17/01/2023

Figure 3: Stria Cladding layout

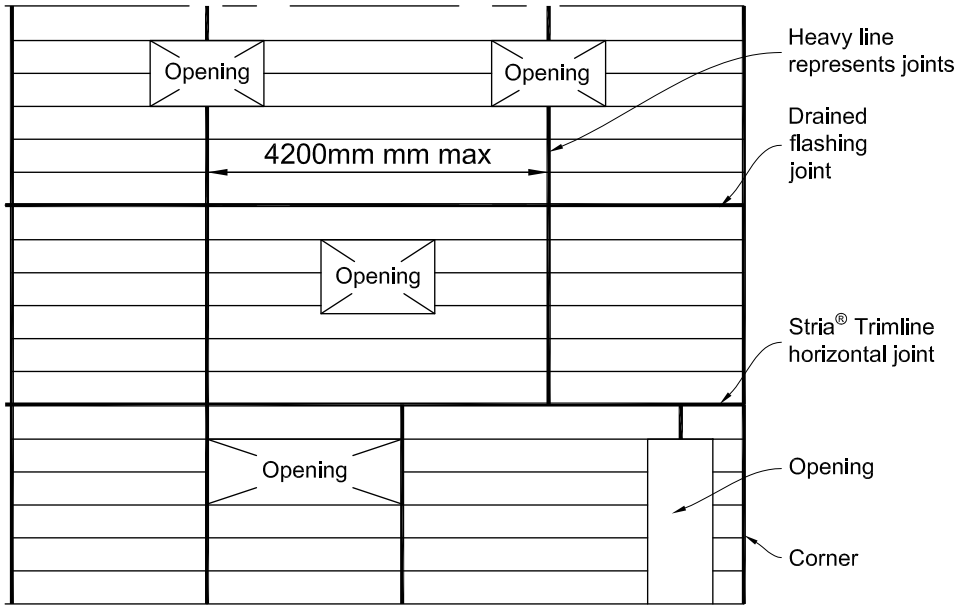

Typical Storey Layout

Figure 4: Foundation detail – option 1

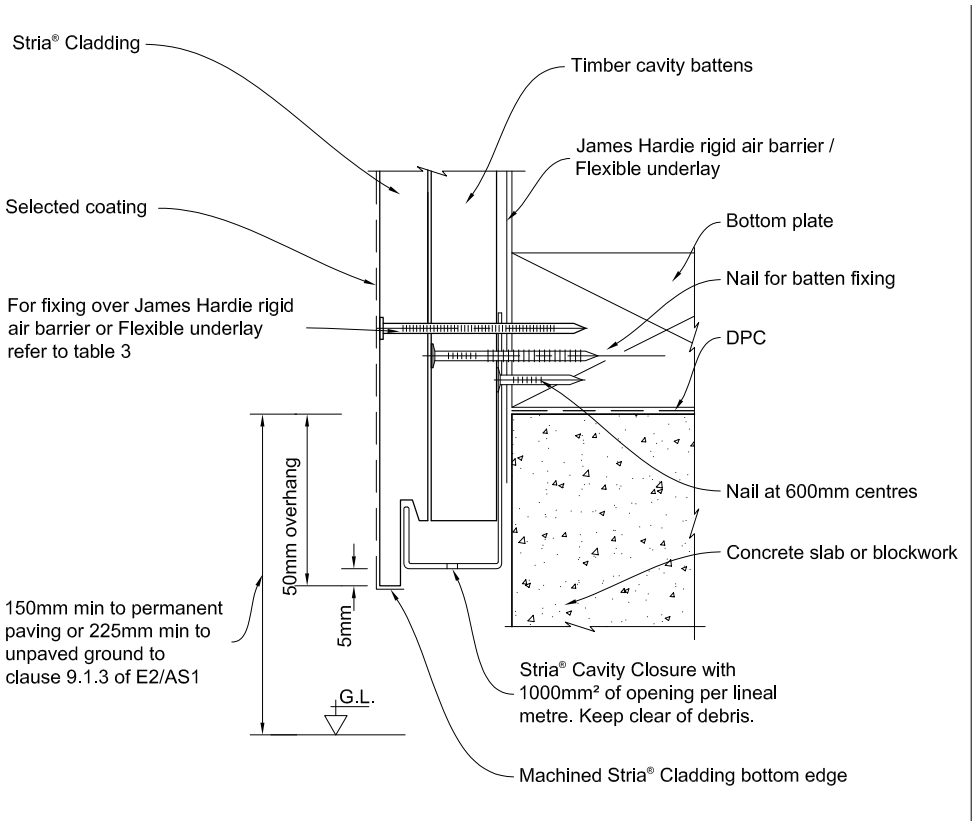

RECEIVED 12/12/2022

Bcon22/0752 - WDC Approved Plans - 17/01/2023

Figure 5: Foundation detail – option 2

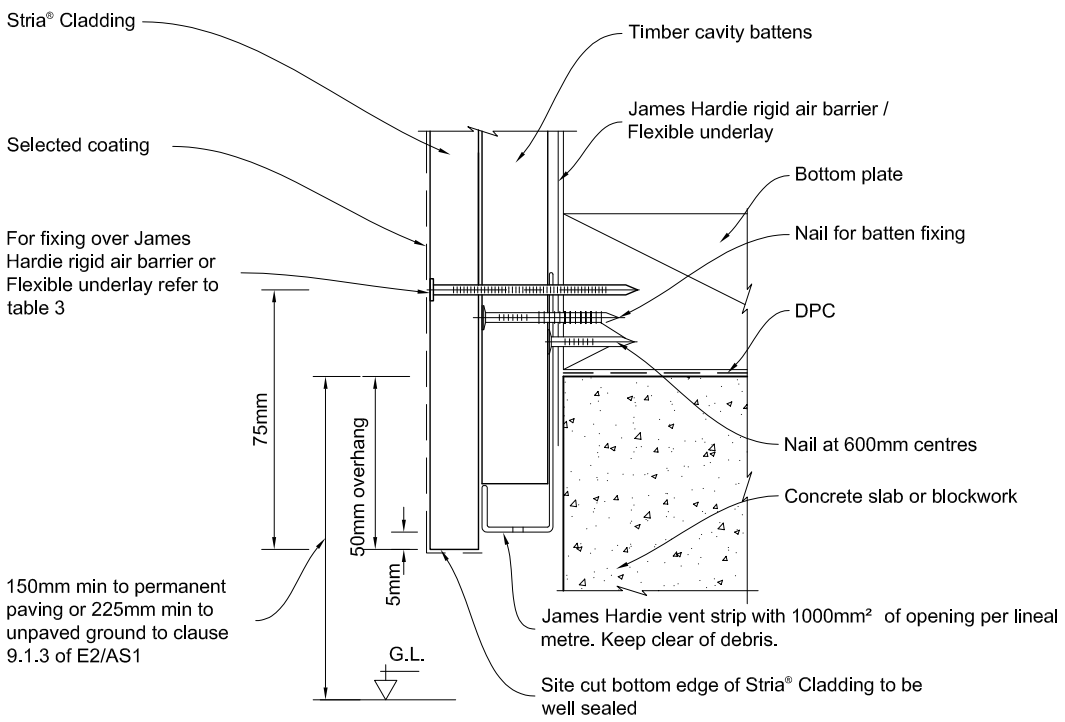

Figure 6: Soffit detail

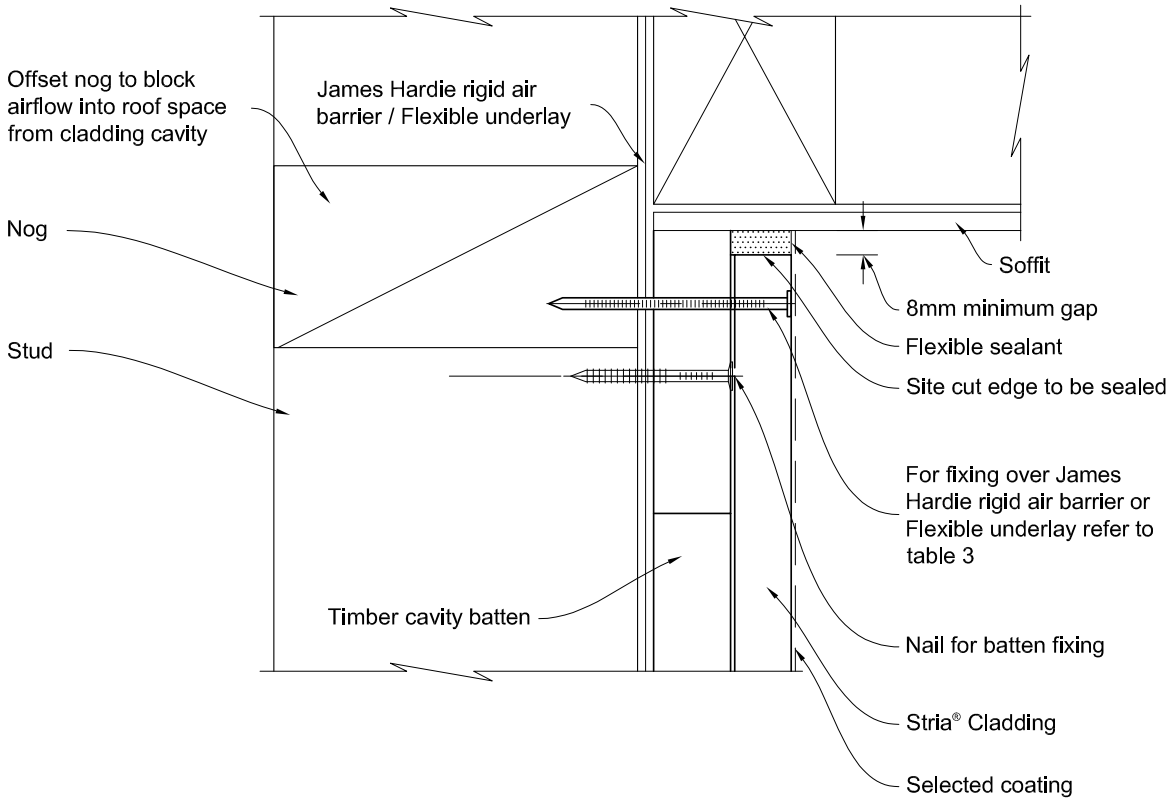

RECEIVED 12/12/2022

Bcon22/0752 - WDC Approved Plans - 17/01/2023

Figure 7: Vertical trimline joint flashing option

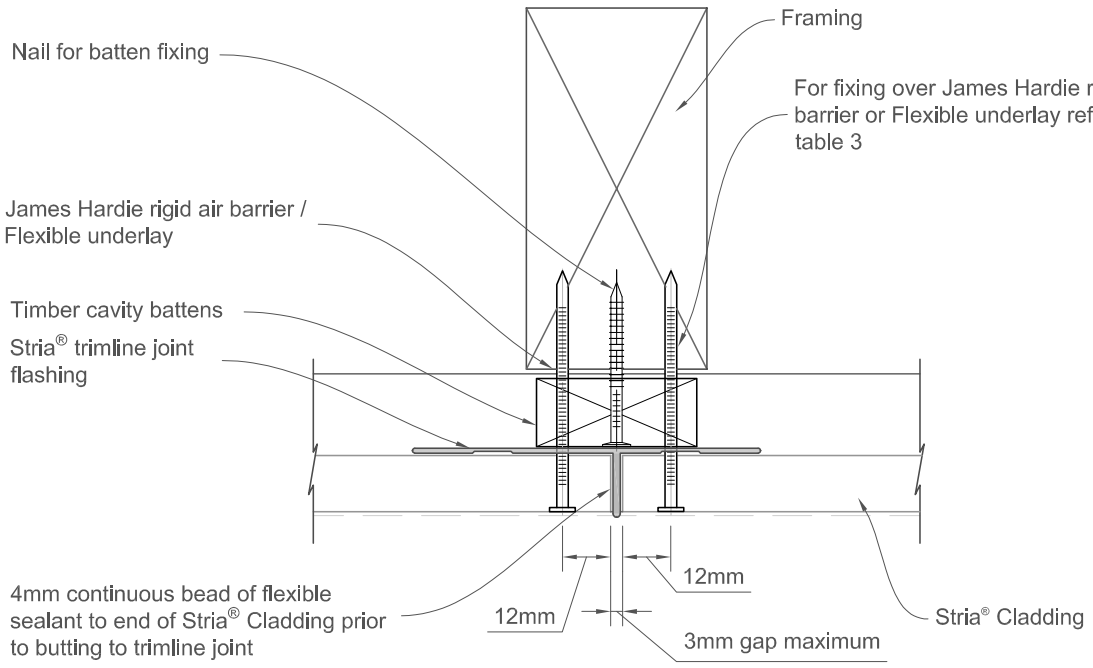

Note: All site cut edges to be sealed

RECEIVED 12/12/2022

Bcon22/0752 - WDC Approved Plans - 17/01/2023

Figure 8: Vertical trimline joint flashing option

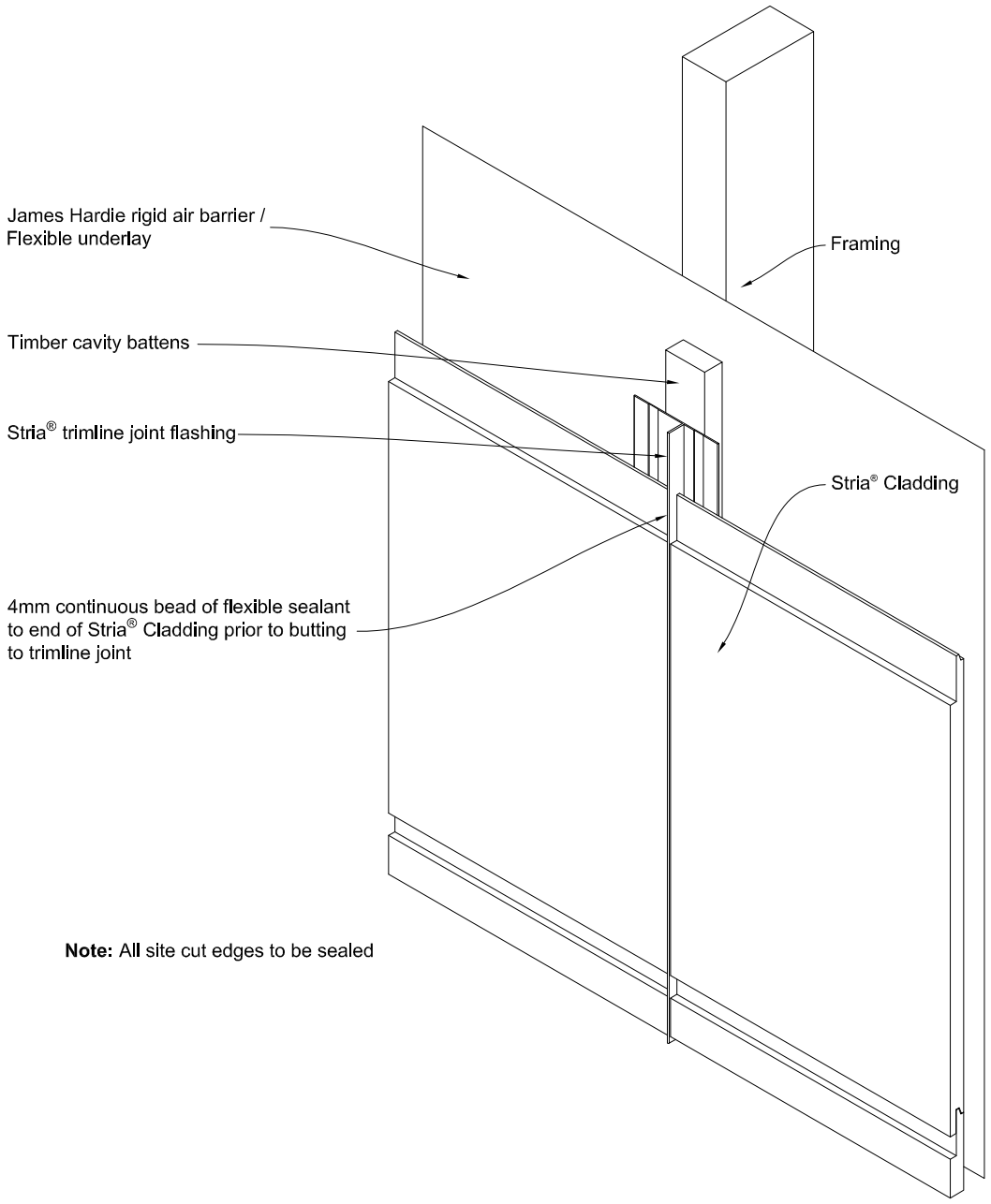

RECEIVED 12/12/2022

Bcon22/0752 - WDC Approved Plans - 17/01/2023

Figure 9: Vertical joint flashing option

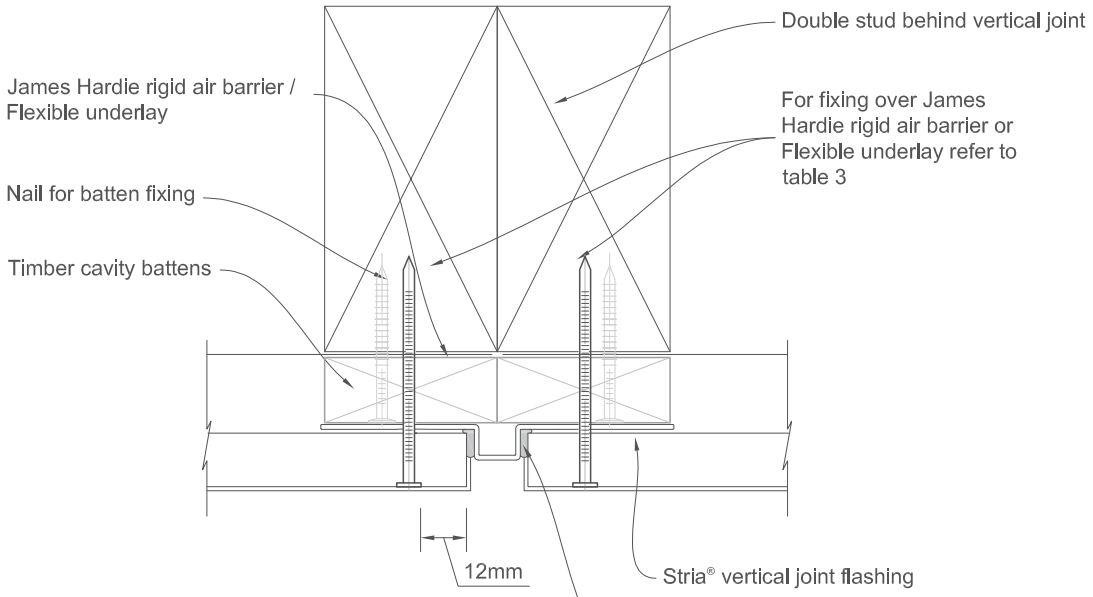

Note: All site cut edges to be sealed

Figure 6: Vertical Jointing Option

RECEIVED 12/12/2022

Bcon22/0752 - WDC Approved Plans - 17/01/2023

Figure 10: Vertical joint flashing option

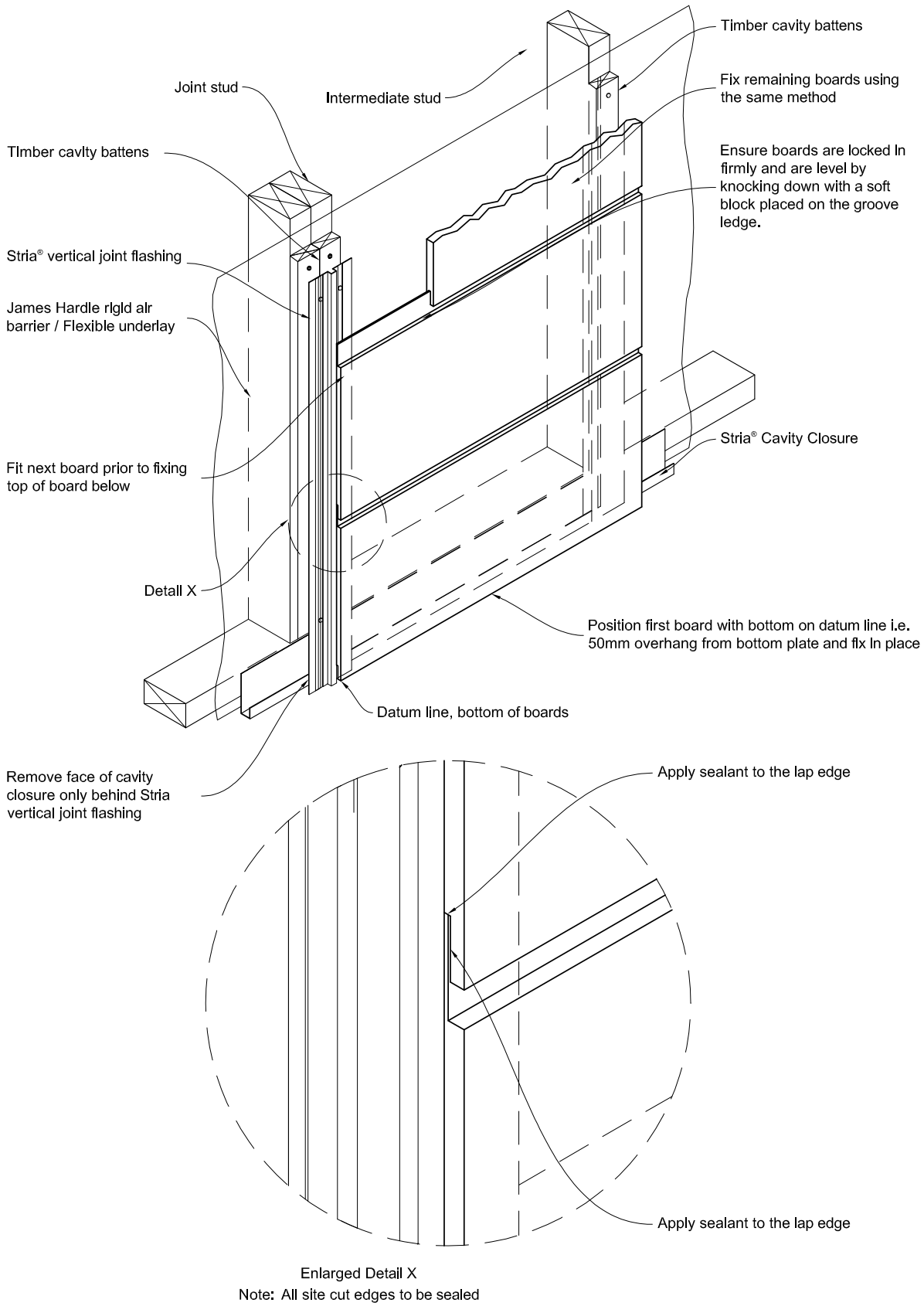

RECEIVED 12/12/2022

Bcon22/0752 - WDC Approved Plans - 17/01/2023

Figure 11: Vertical butt joint option

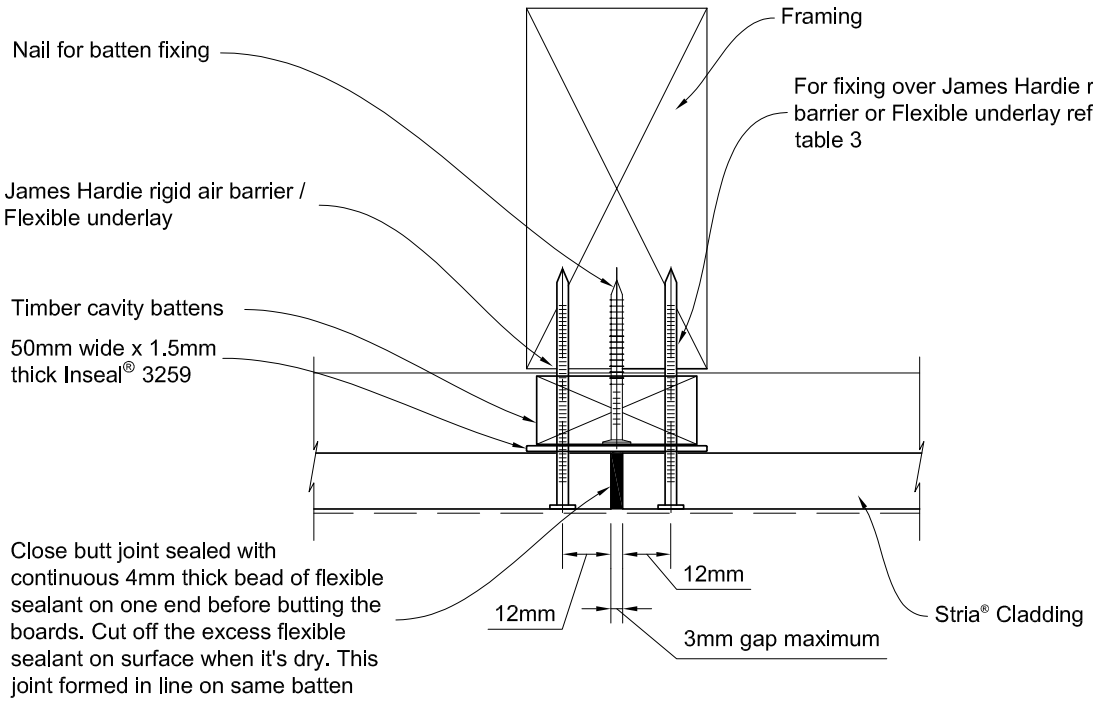

Note: All site cut edges to be sealed

RECEIVED 12/12/2022

Bcon22/0752 - WDC Approved Plans - 17/01/2023

Figure 12: Fixing detail

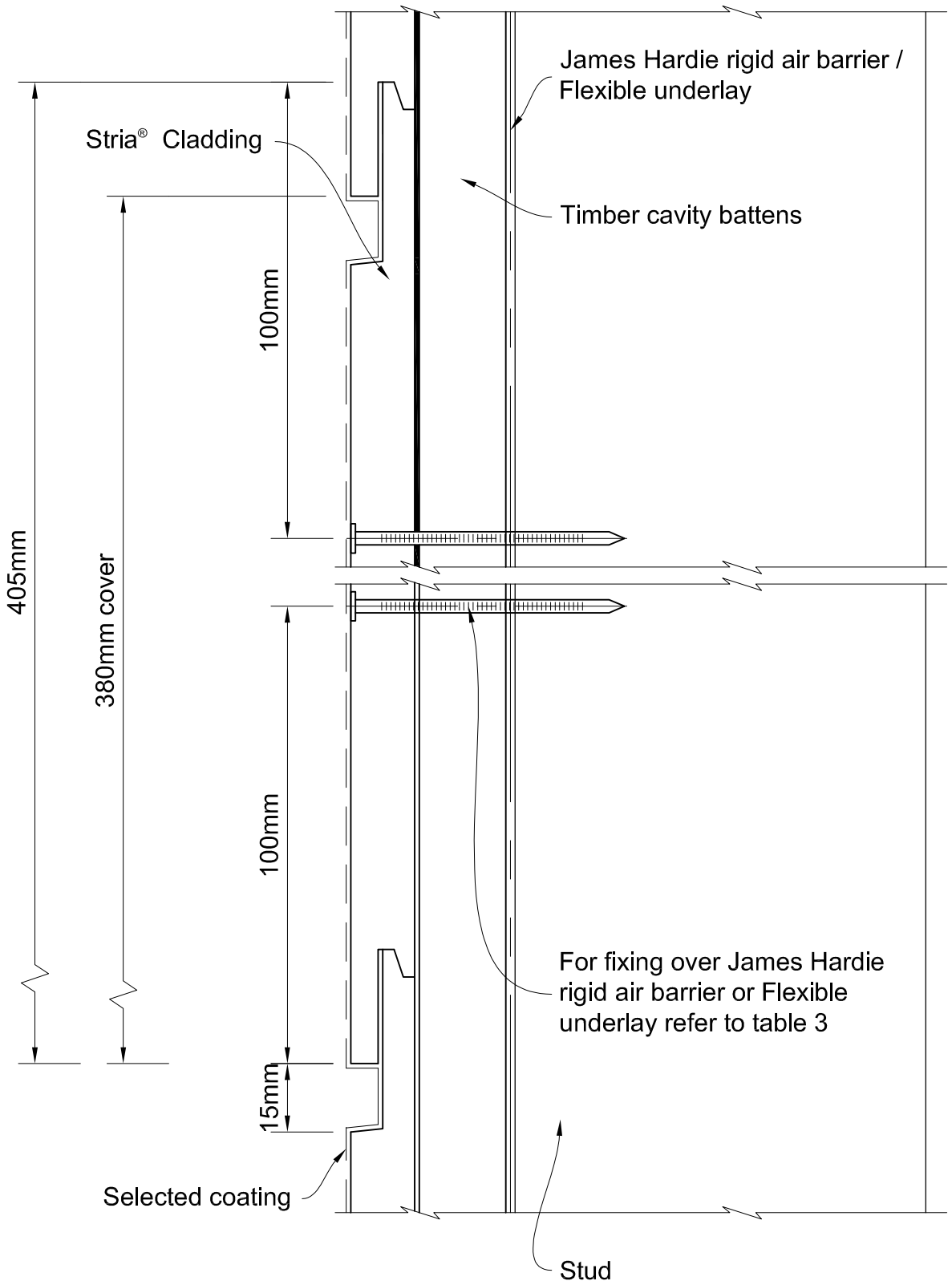

RECEIVED 12/12/2022

Bcon22/0752 - WDC Approved Plans - 17/01/2023

Figure 13: External aluminium box corner

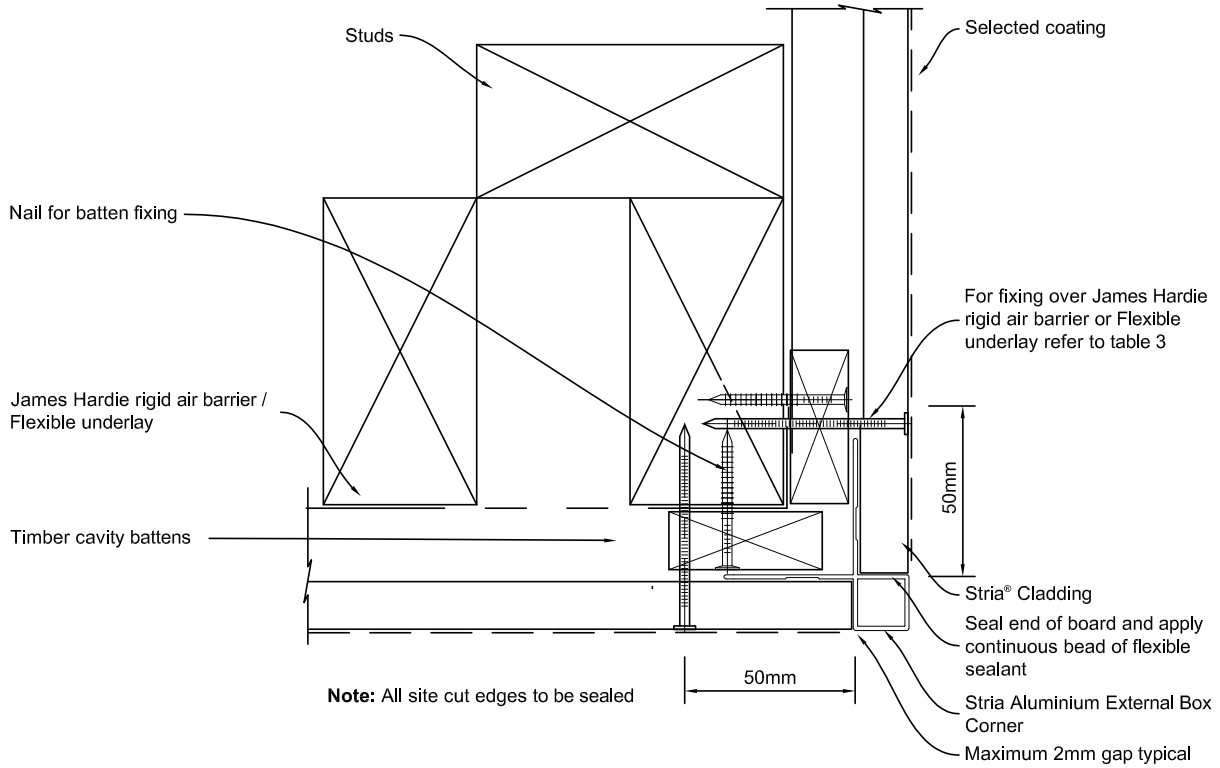

Figure 14: External aluminium box corner (Alternative)

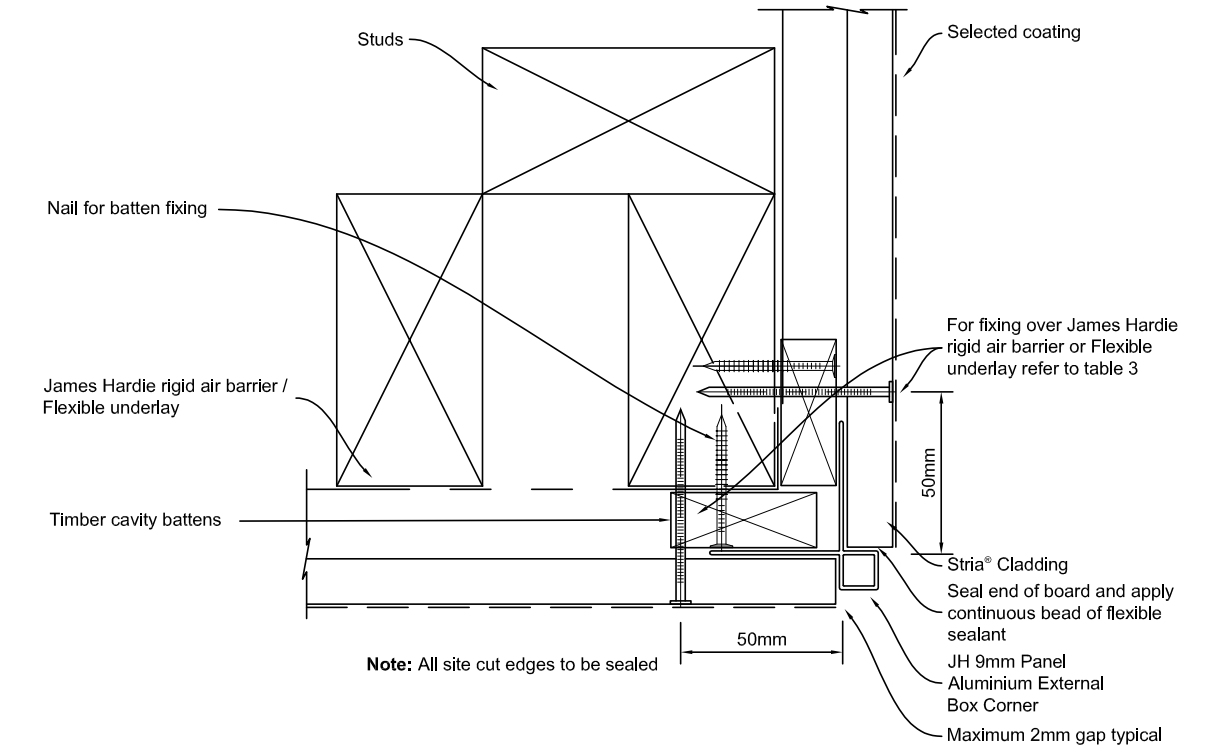

RECEIVED 12/12/2022

Bcon22/0752 - WDC Approved Plans - 17/01/2023

Figure 15: Internal aluminium corner

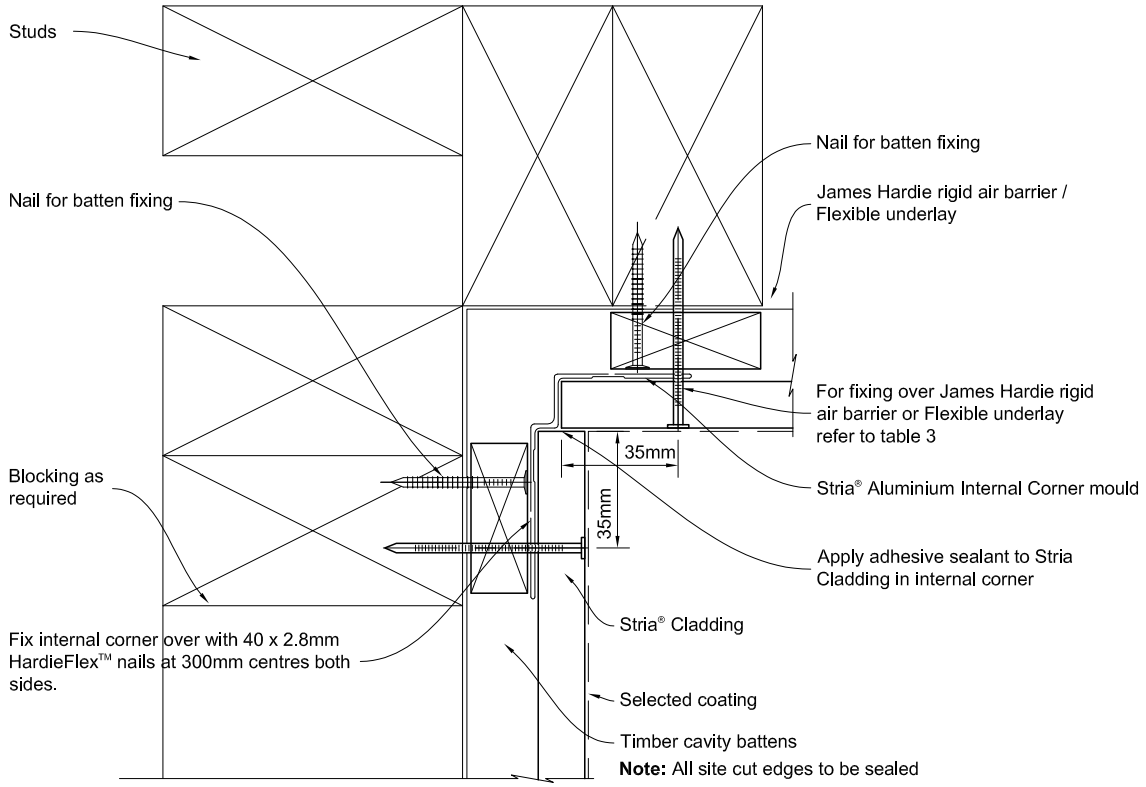

Figure 16: Internal mitred corner

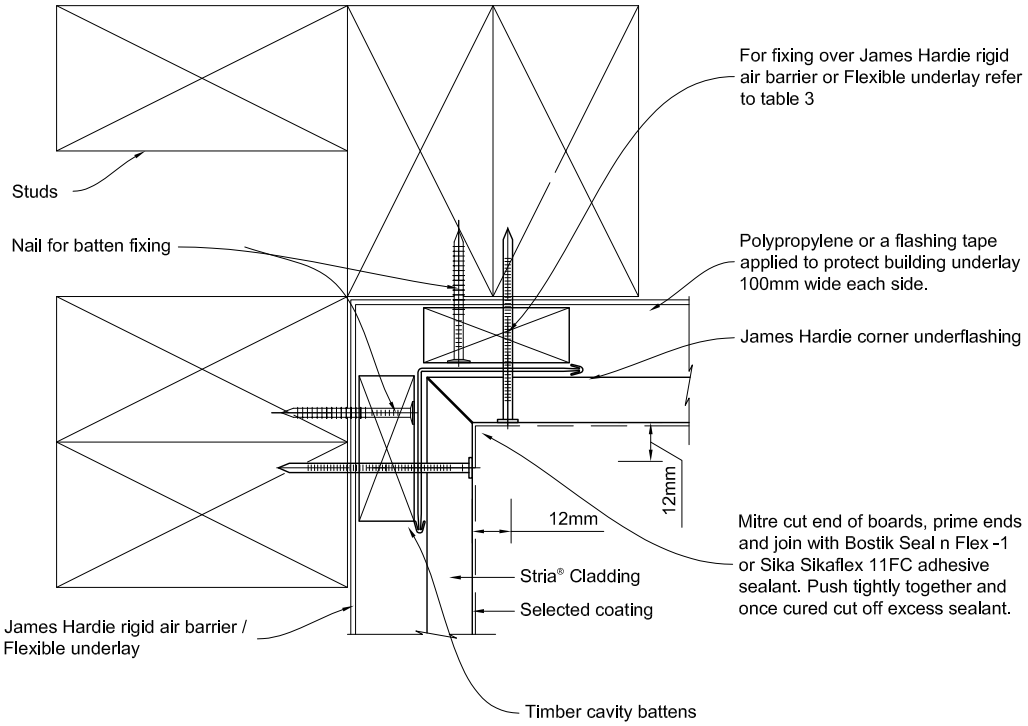

RECEIVED 12/12/2022

Bcon22/0752 - WDC Approved Plans - 17/01/2023

Figure 17: Window sill

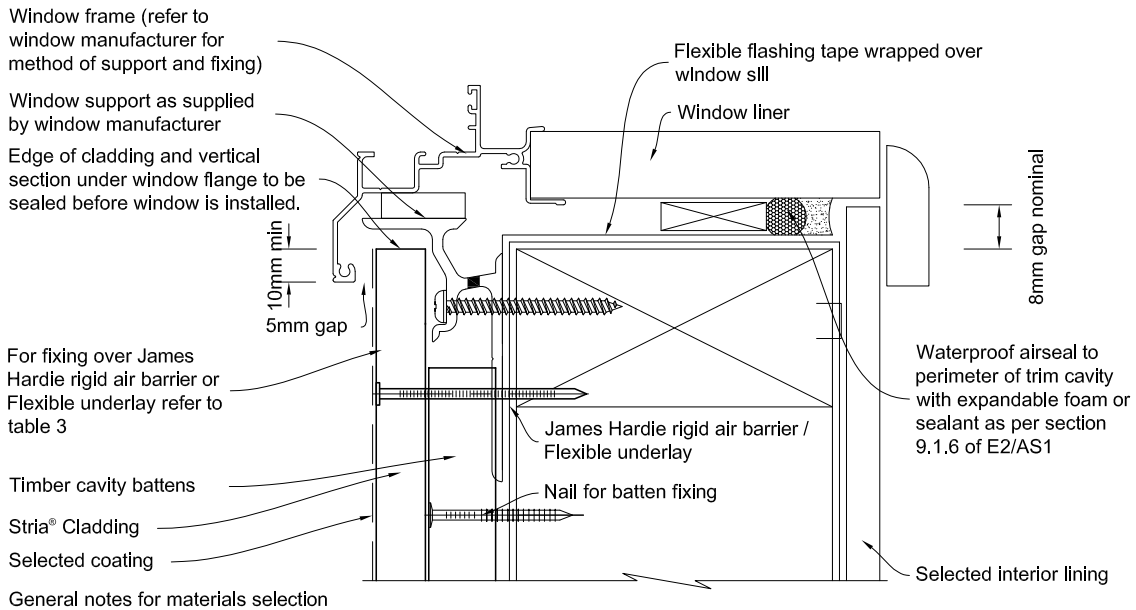

General notes for materials selection

1. Flashing materials must be selected based on environmental exposure, refer to NZS 3604 and Table 20 of NZBC E2/AS1.
2. Flexible underlay must comply with acceptable solution E2/AS1.
3. Flashing tape must have proven compatibility with the selected flexible underlay and other materials with which it comes into contact.
4. When James Hardie rigid air barriers are used flashing tape to be applied to the entire opening.

Refer to the manufacturer or supplier for technical information for these materials.

Figure 18: Window jamb

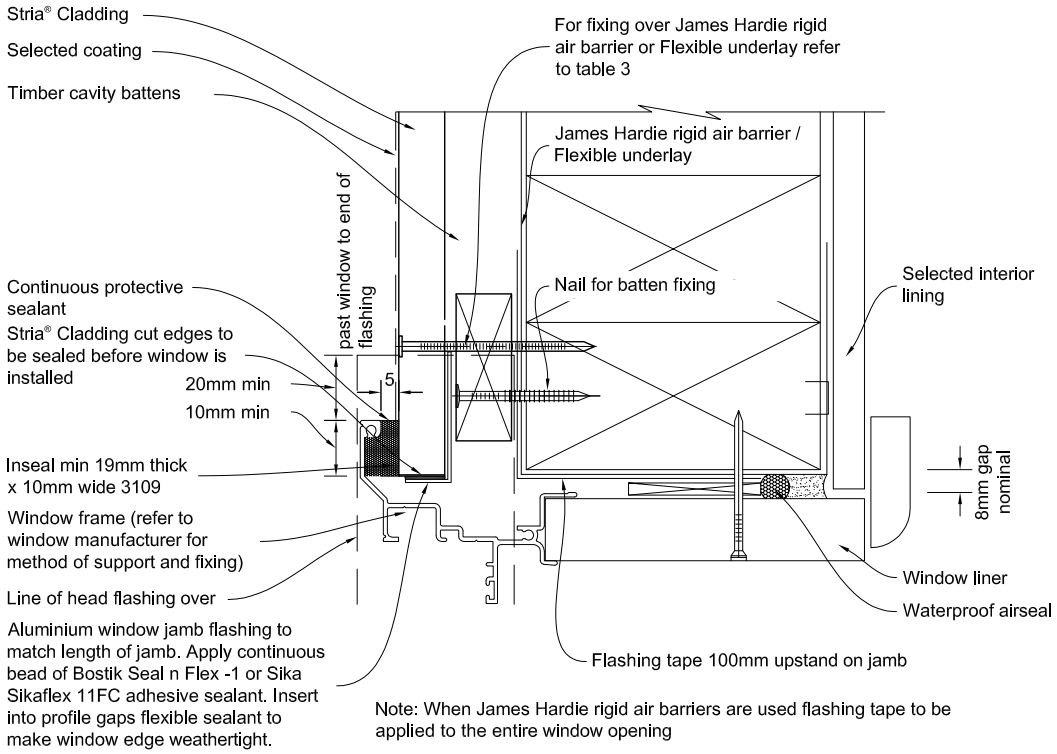

Note: When James Hardie rigid air barriers are used flashing tape to be applied to the entire window opening

RECEIVED 12/12/2022

Bcon22/0752 - WDC Approved Plans - 17/01/2023

Figure 19: Window head

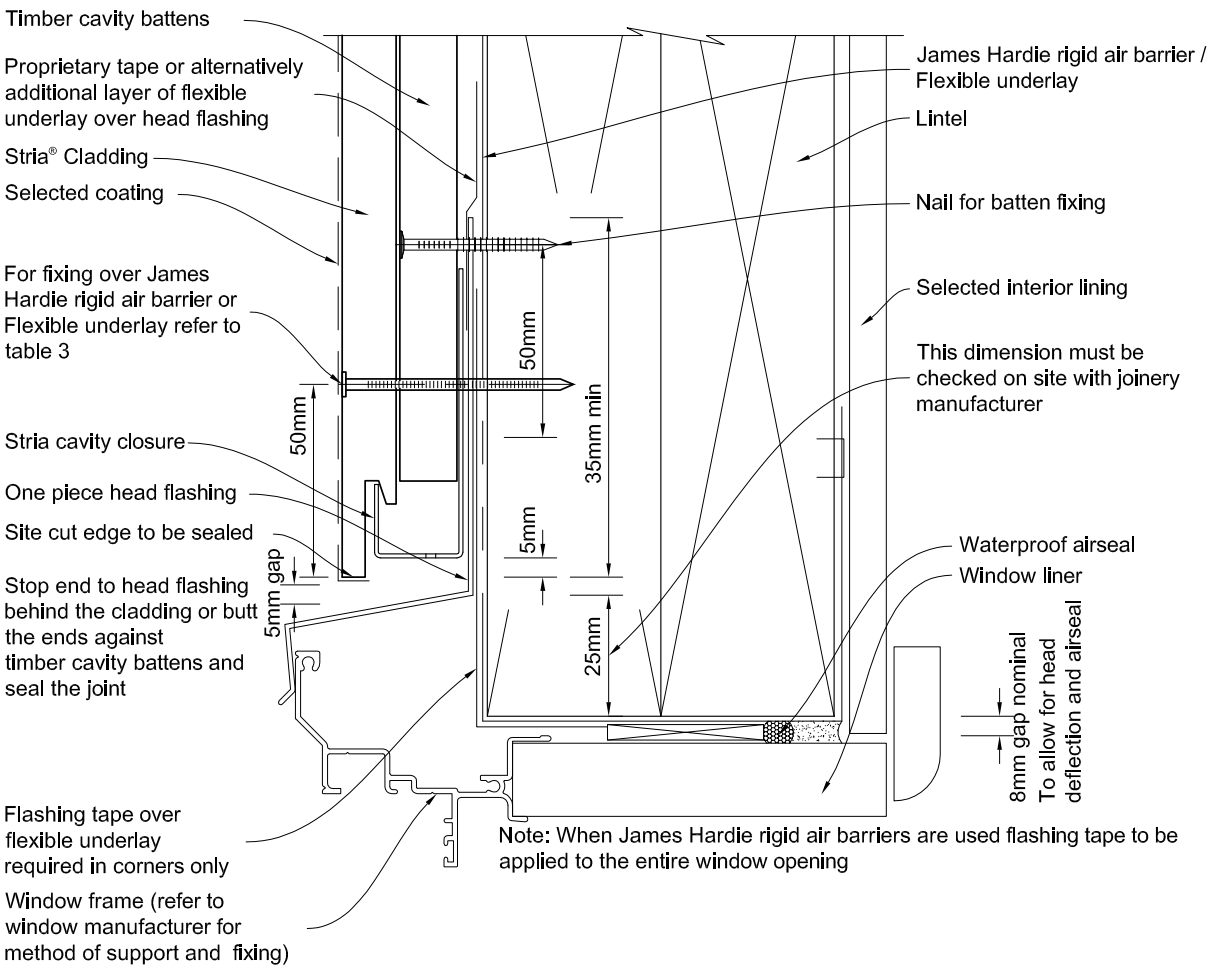

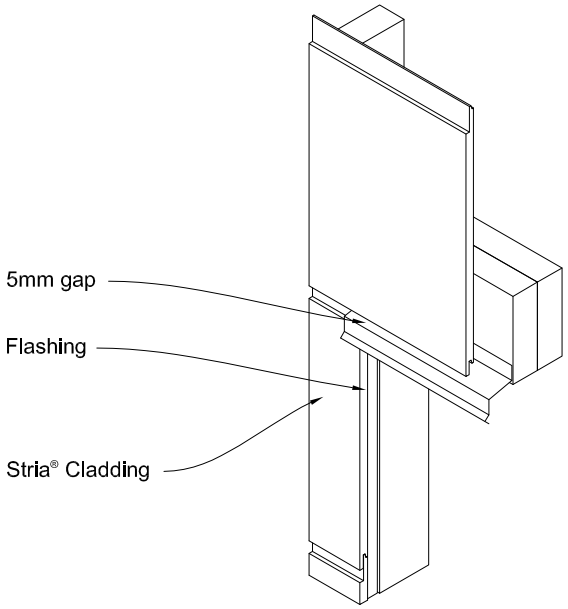

RECEIVED 12/12/2022

Bcon22/0752 - WDC Approved Plans - 17/01/2023

Figure 20: Stria cutting around sill

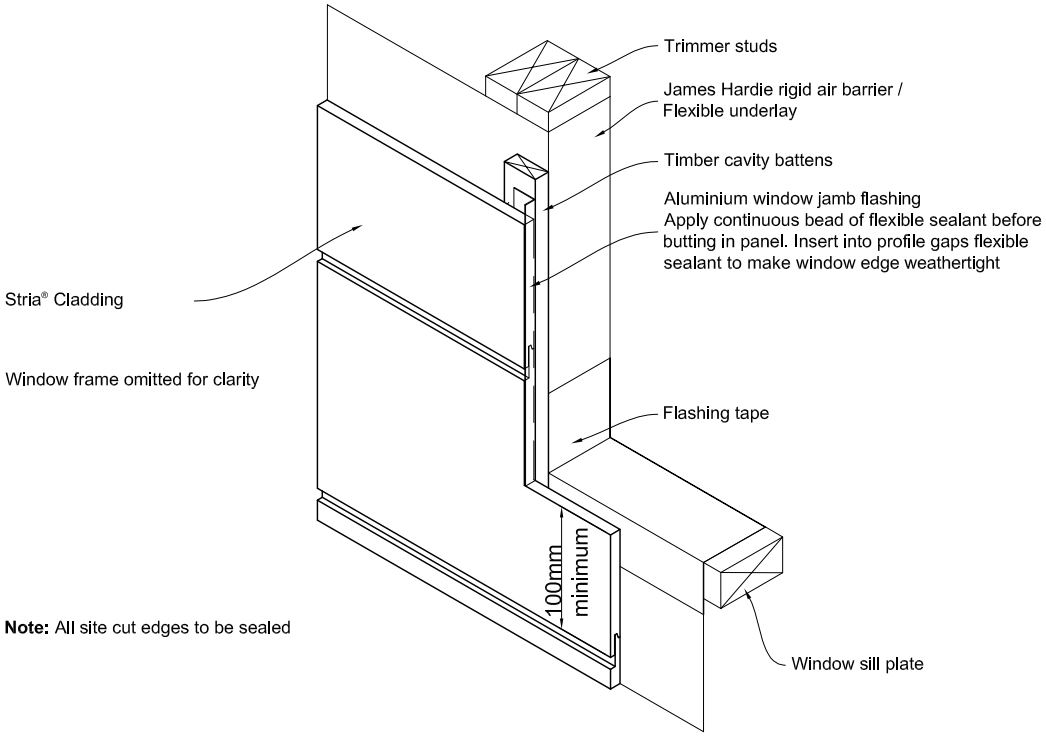

Figure 21: Stria cutting around head

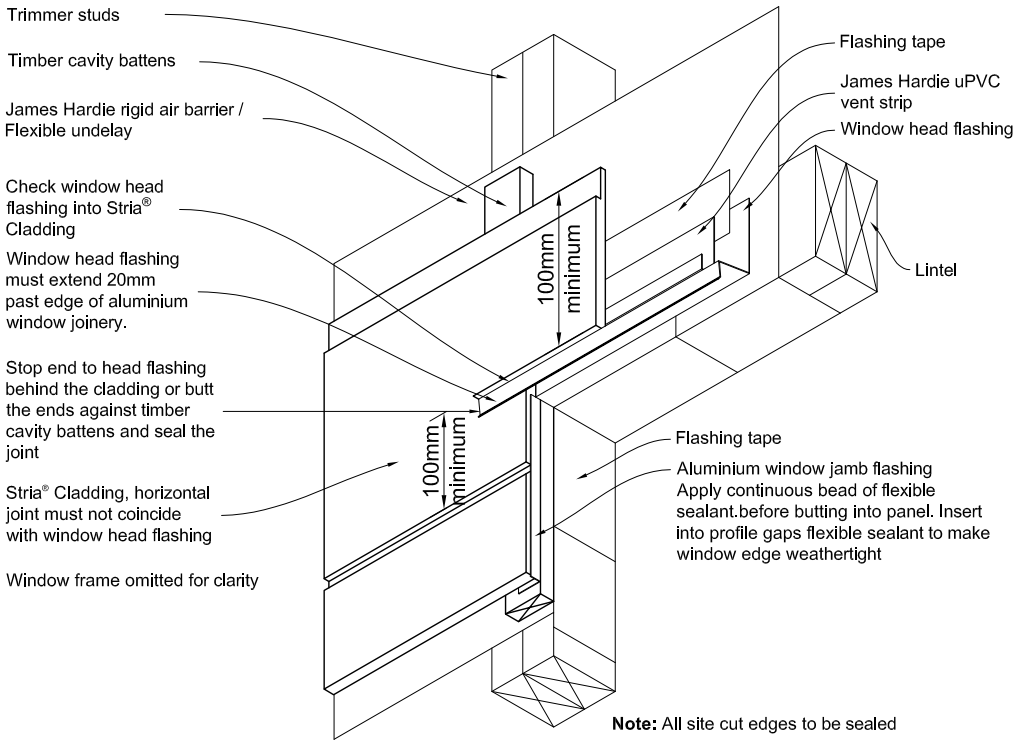

RECEIVED 12/12/2022

Bcon22/0752 - WDC Approved Plans - 17/01/2023

Figure 22: Window head

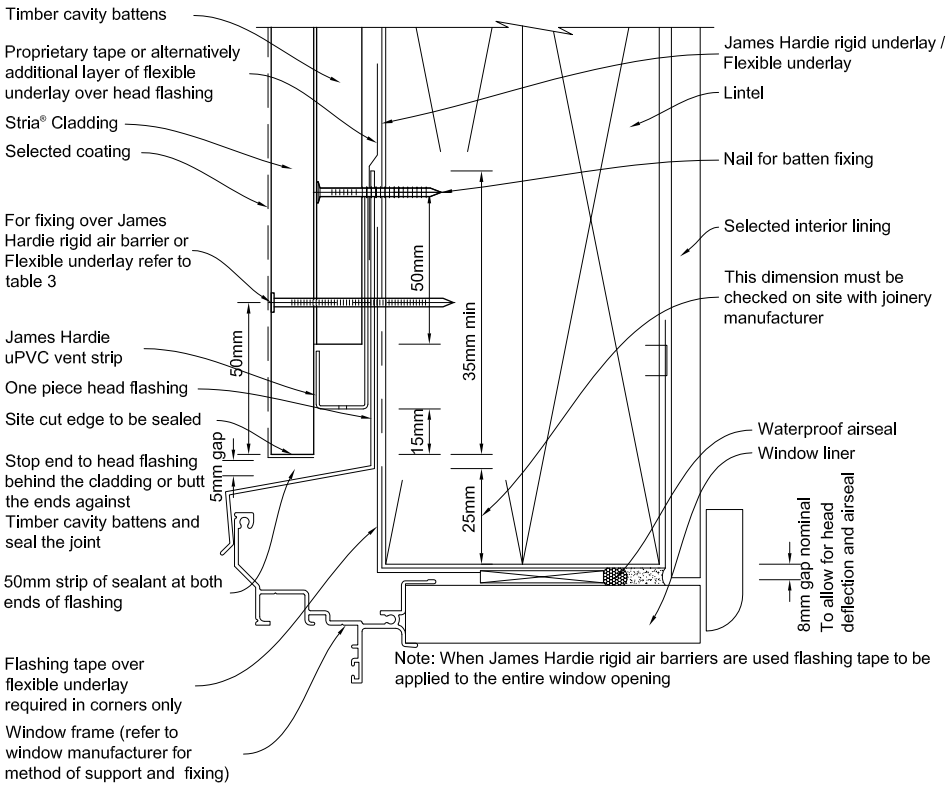

Figure 23: Window head to Stria Cladding cut board

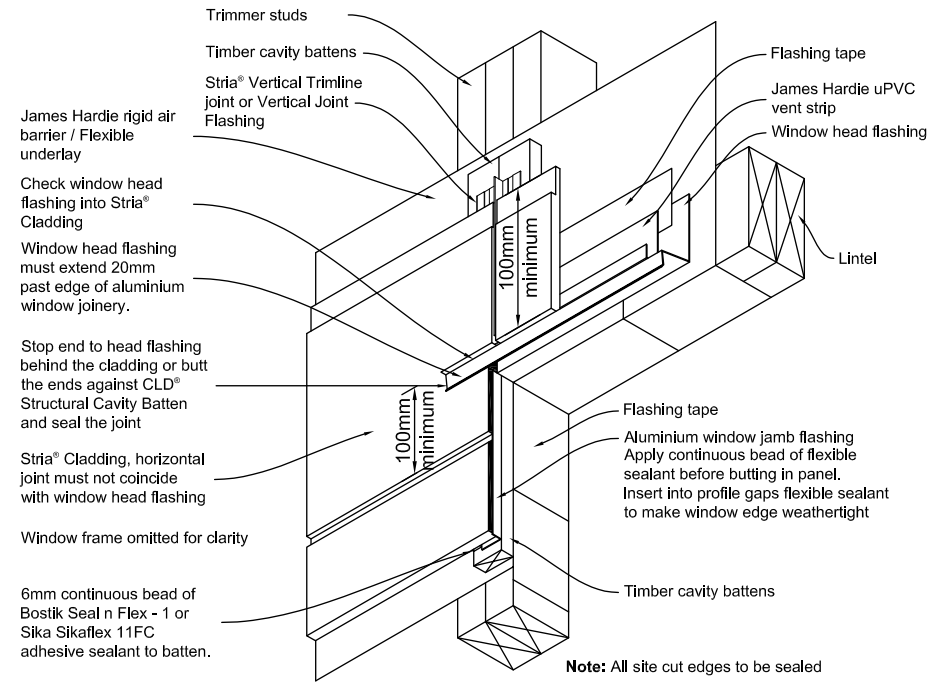

RECEIVED 12/12/2022

Bcon22/0752 - WDC Approved Plans - 17/01/2023

Figure 24: Window head

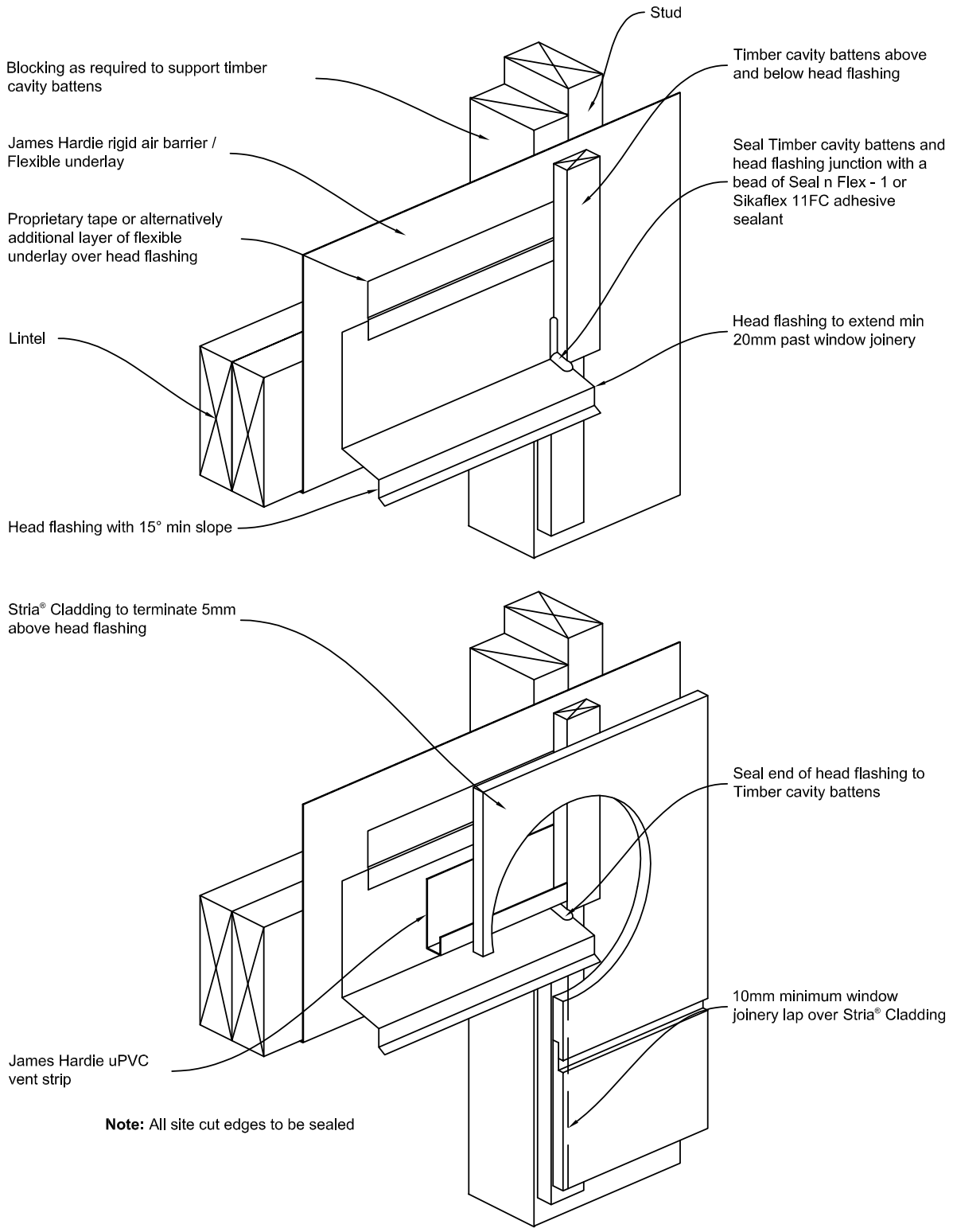

RECEIVED 12/12/2022

Bcon22/0752 - WDC Approved Plans - 17/01/2023

Figure 25: Window Head with facings

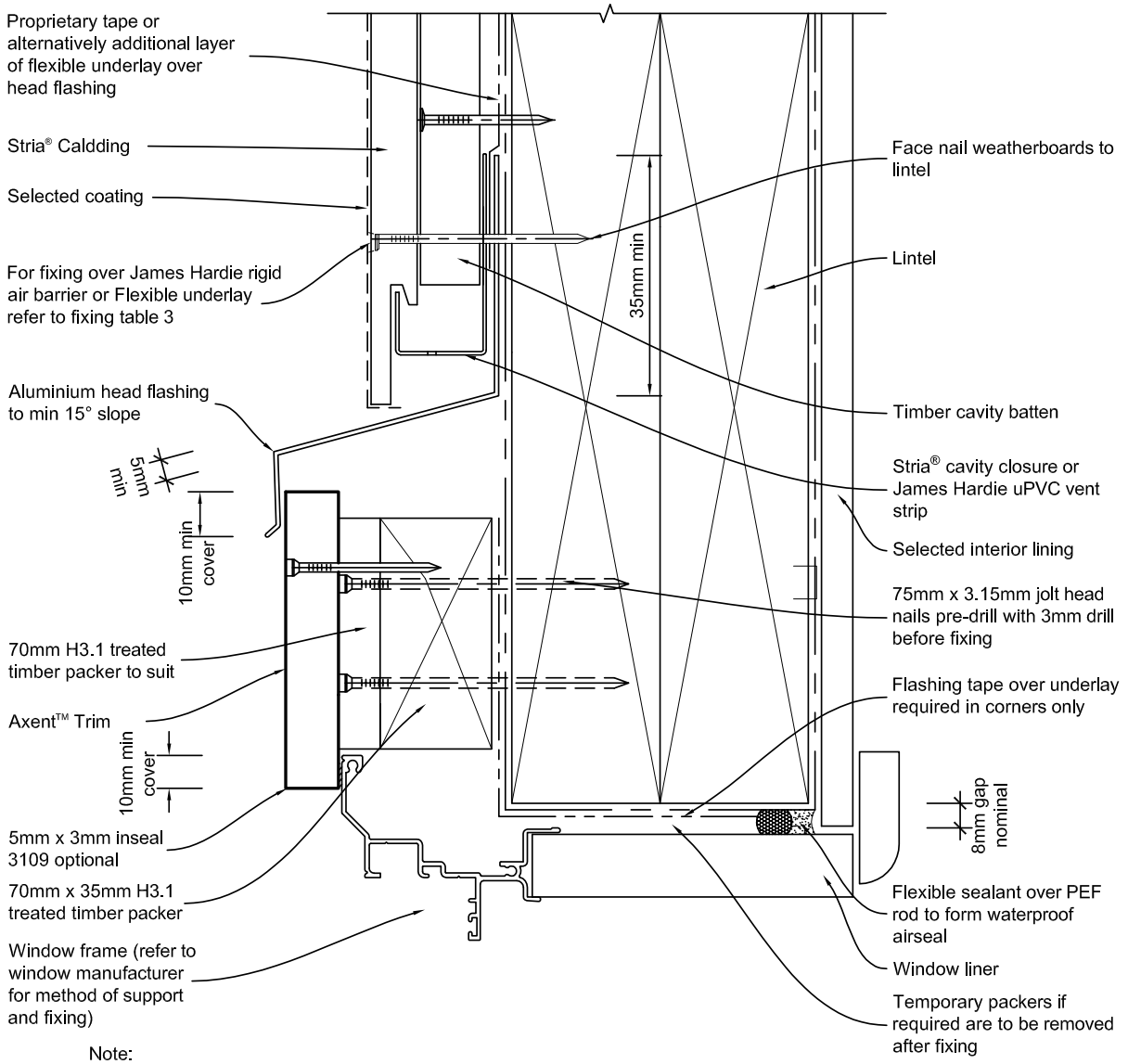

Note:

- When James Hardie rigid air barrier is used flashing tape to be applied to the entire window opening.
- Sealant must be installed between head flashing and Axent™ Trim and Axent™ Trim and window flange in VH and EH wind zones and SED pressures.
- Alternatively, the head flashings can be formed with stop ends as per E2/AS1.

RECEIVED 12/12/2022

Bcon22/0752 - WDC Approved Plans - 17/01/2023

Figure 26: Window jamb with facings

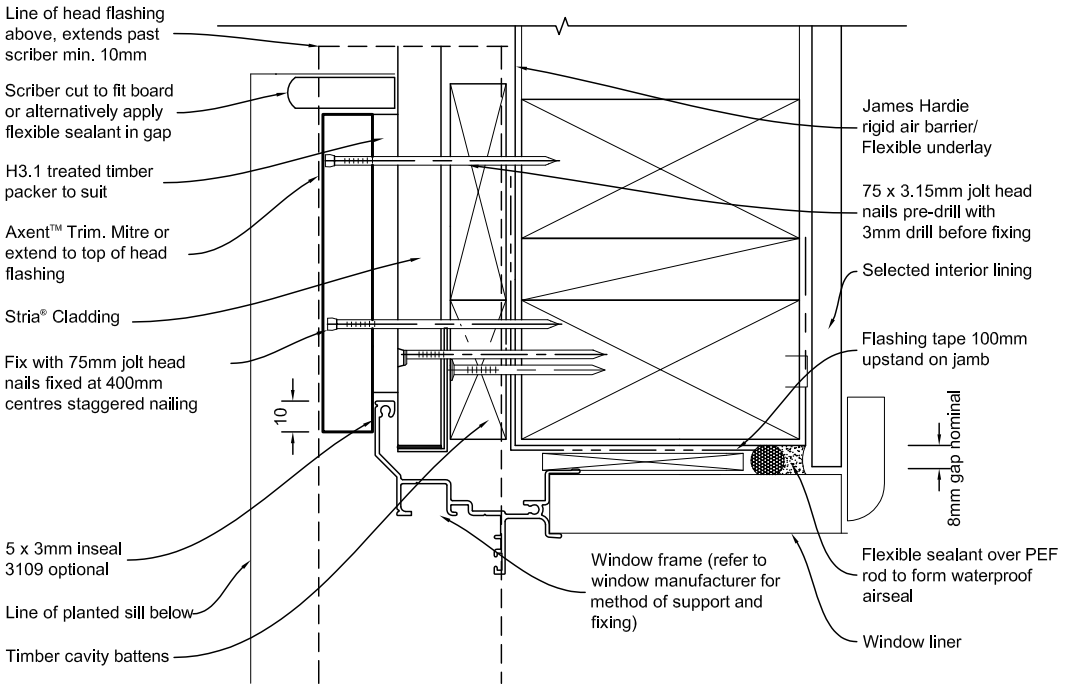

Note: When James Hardie rigid air barrier is used flashing tape to be applied to the entire window opening.

Figure 27: Window sill with planted sill

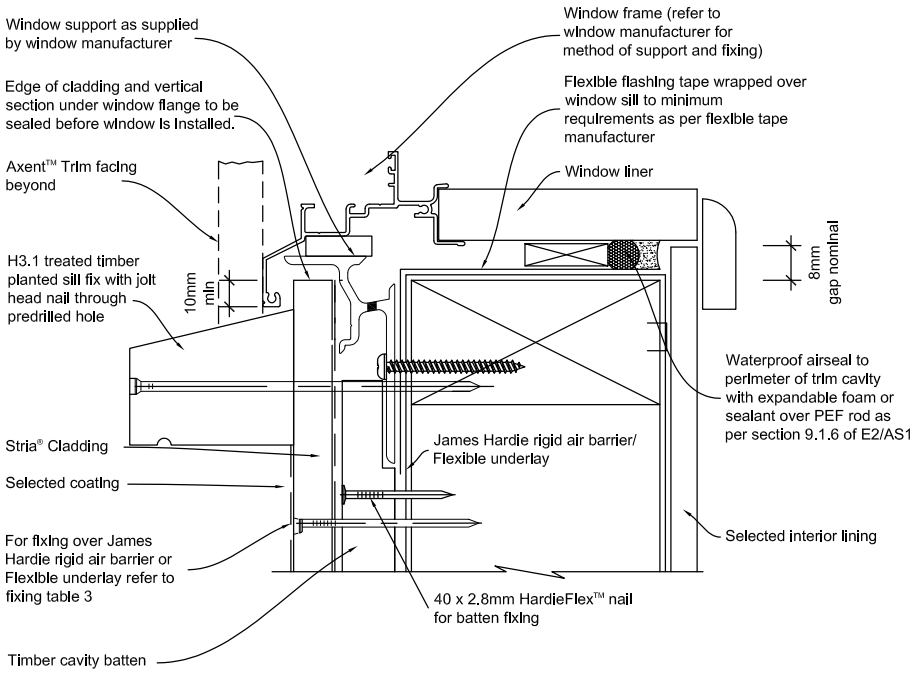

General notes for materials selection

1. Flashing materials must be selected based on environmental exposure, refer to NZS 3604 and Table 20 of NZBC E2/AS1.
2. Flexible underlay must comply with acceptable solution E2/AS1.
3. Flashing tape must have proven compatibility with the selected flexible underlay and other materials with which it comes into contact.
4. When James Hardie rigid air barriers are used flashing tape to be applied to the entire opening.

Refer to the manufacturer or supplier for technical information for these materials.

RECEIVED 12/12/2022

Bcon22/0752 - WDC Approved Plans - 17/01/2023

Figure 28: Trimline horizontal joint at floor joists

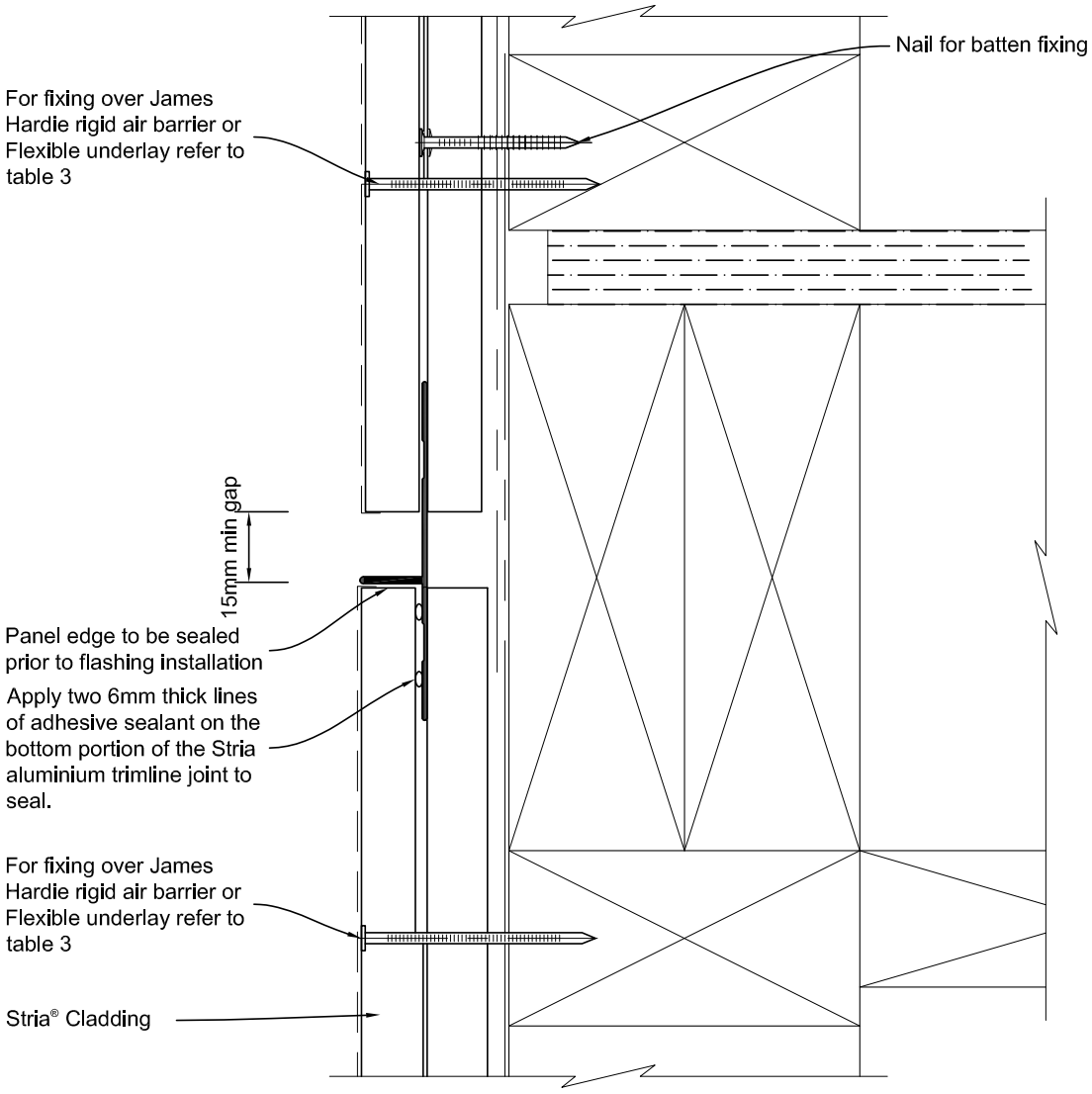

STEP 1
- Check architects plans for the type of flashing to be used.

STEP 2
- Check fixing centres and edge distances.

STEP 3
- When 50 year durability is required refer Table 20 E2/AS1.

STEP 4
- The flashing to be placed in the centre of the floor joists. Do not fix timber cavity battens or cladding into floor joists.

Notes:
- Stria aluminium trimline joint, take care to ensure continuous seal is formed between panel and the trimline joint.
- A purpose made 100mm long x 16mm deep x 0.7mm thick 'L' shaped flashing will be required over the butt joint of the Stria aluminium trimline joint.

RECEIVED 12/12/2022

Bcon22/0752 - WDC Approved Plans - 17/01/2023

Figure 29: Drained flashing joint at floor level

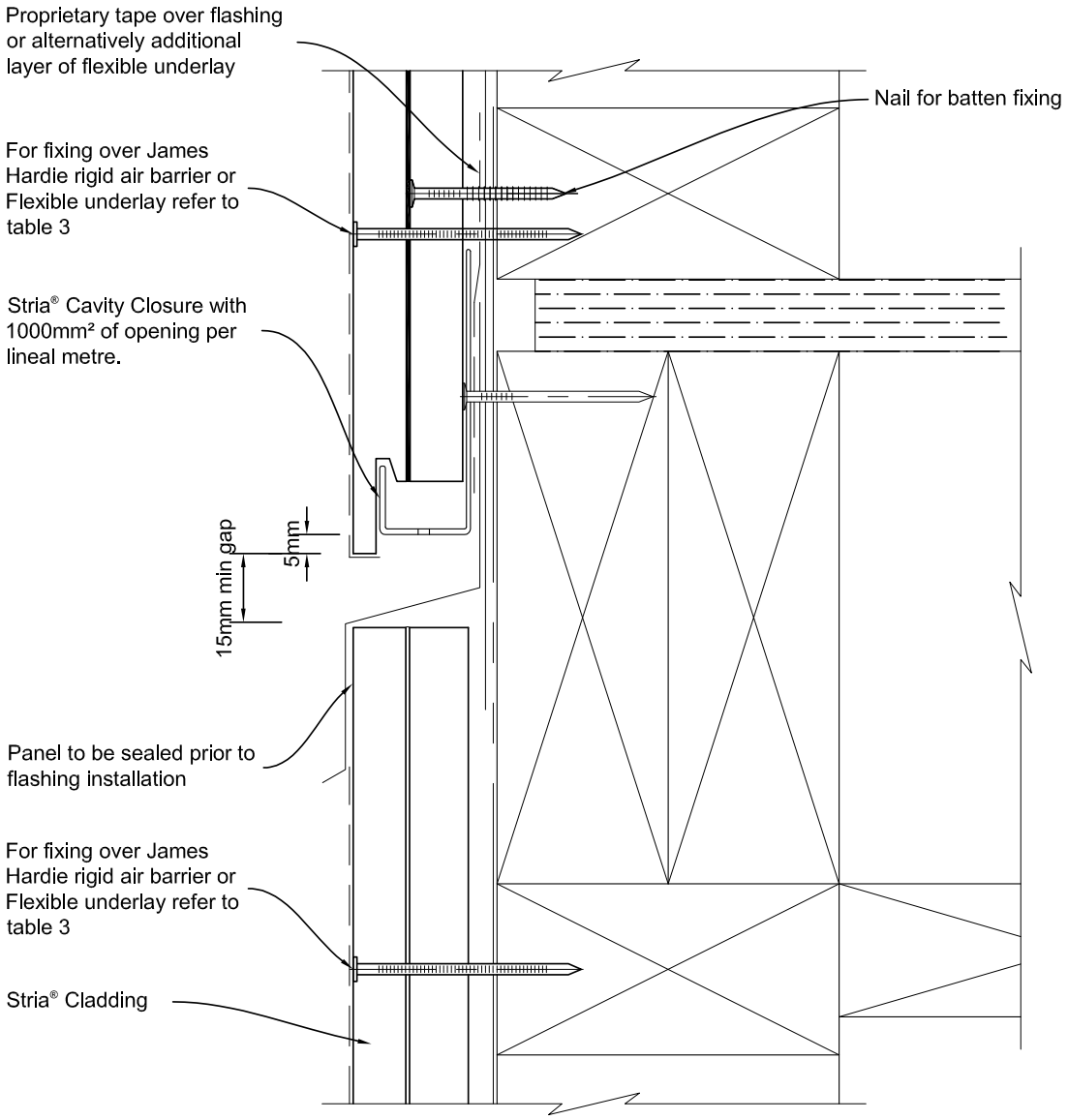

STEP 1
- Check architects plans for the type of flashing to be used.

STEP 2
- Check fixing centres and edge distances.
- If top fixings are to be hidden by the Z flashing they will need to be fixed and sealed before the Z flashing is installed.

STEP 3
- When 50 year durability is required refer Table 20 E2/AS1.

STEP 4
- The flashing to be placed in the centre of the floor joists. Do not fix timber cavity battens or cladding into floor joists.

Note: This detail is required to limit cavities to a maximum of 2 stories or 7 metres. Refer to E2/AS1 clause 9.1.9.4

RECEIVED 12/12/2022

Bcon22/0752 - WDC Approved Plans - 17/01/2023

Figure 30: Drained flashing joint at floor joist

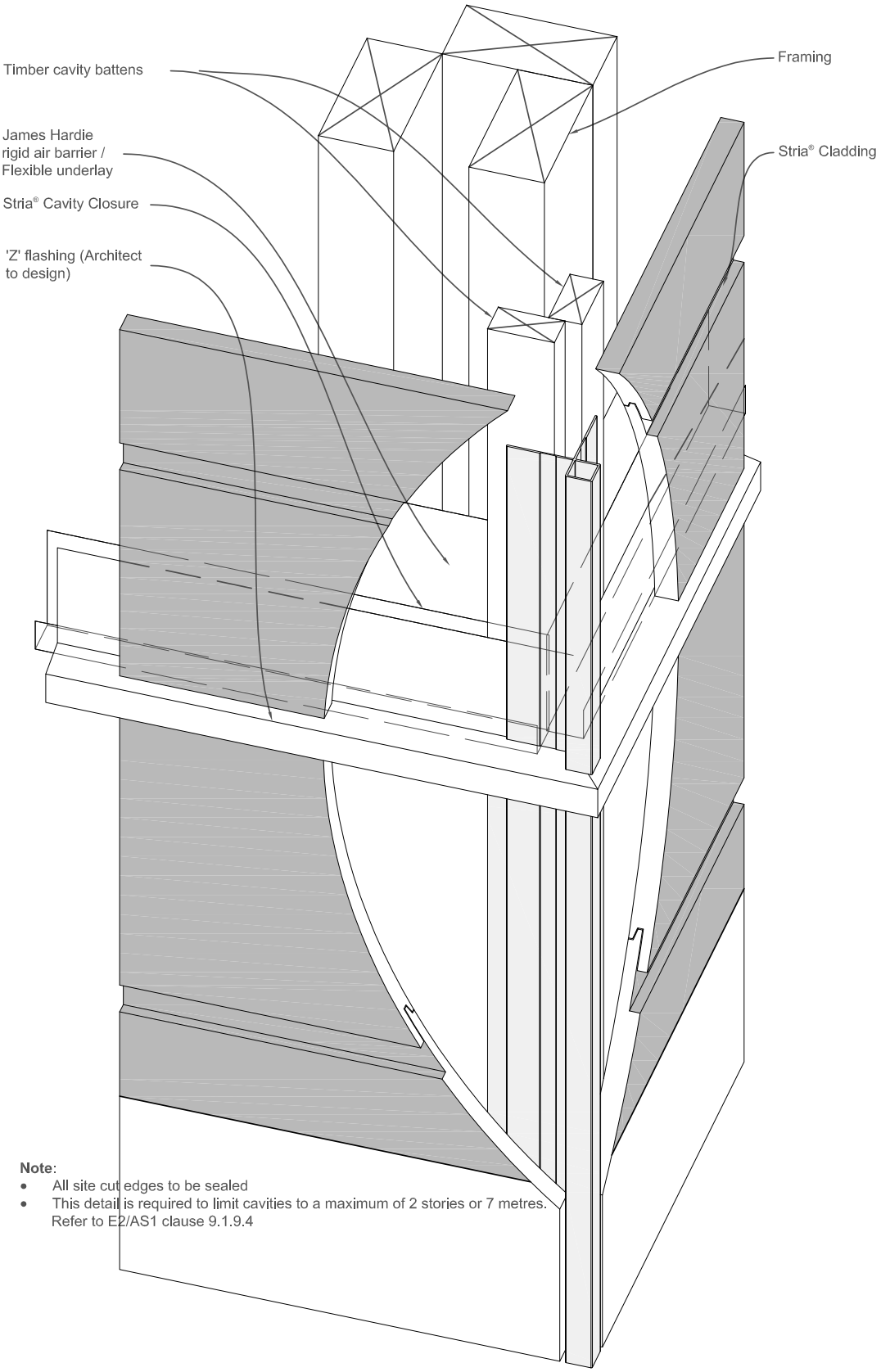

Note:
- All site cut edges to be sealed
- This detail is required to limit cavities to a maximum of 2 stories or 7 metres. Refer to E2/AS1 clause 9.1.9.4

RECEIVED 12/12/2022

Bcon22/0752 - WDC Approved Plans - 17/01/2023

Figure 31: Engineered floor joist

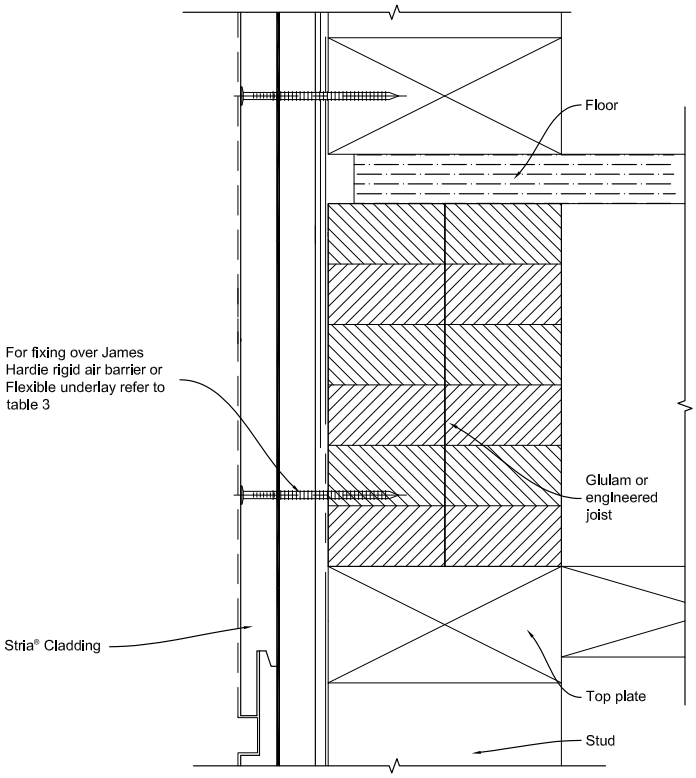

Figure 32: Apron flashing detail

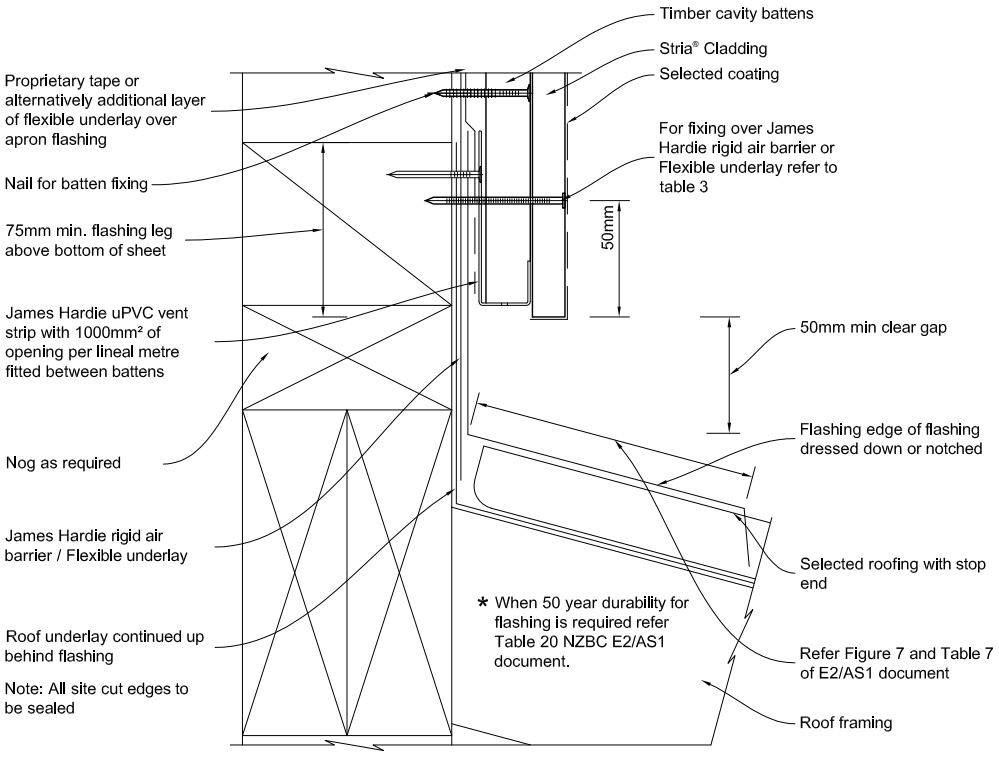

RECEIVED 12/12/2022

Bcon22/0752 - WDC Approved Plans - 17/01/2023

Figure 33: Parapet flashing

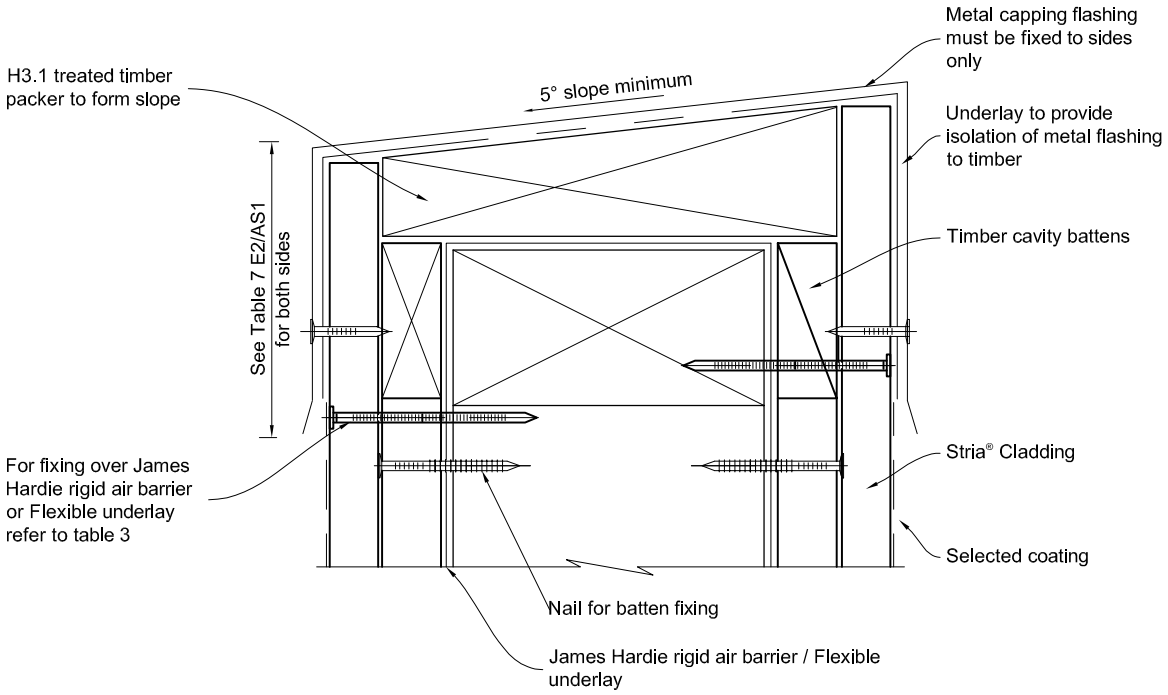

Figure 34: Roof to wall junction detail

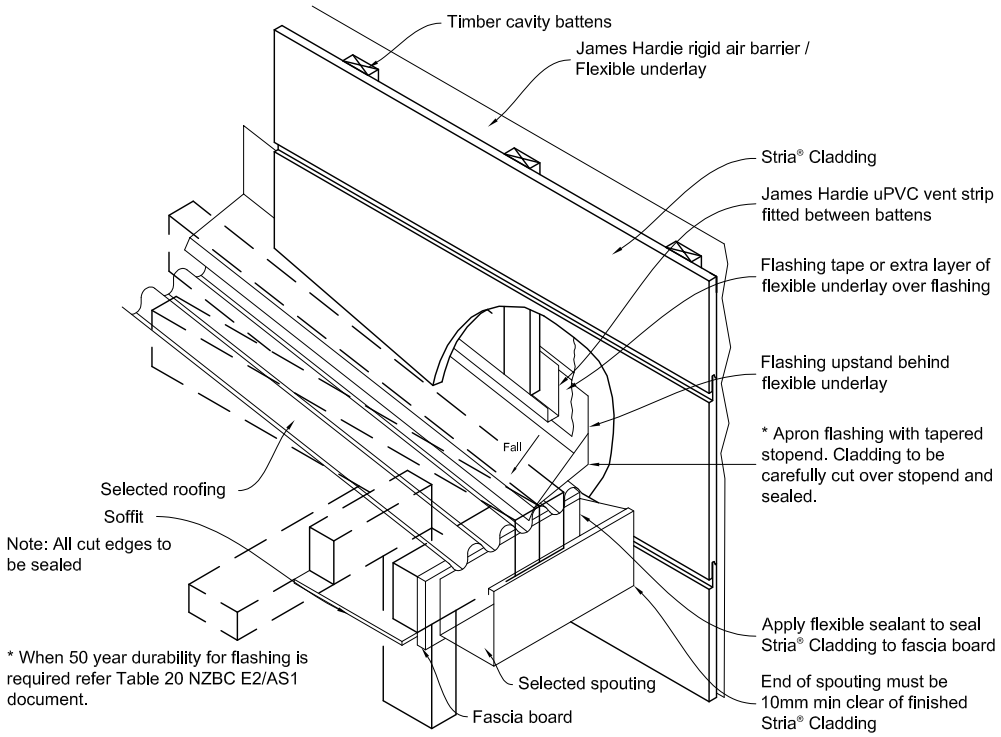

RECEIVED 12/12/2022

Bcon22/0752 - WDC Approved Plans - 17/01/2023

Figure 35: Meter box at sill

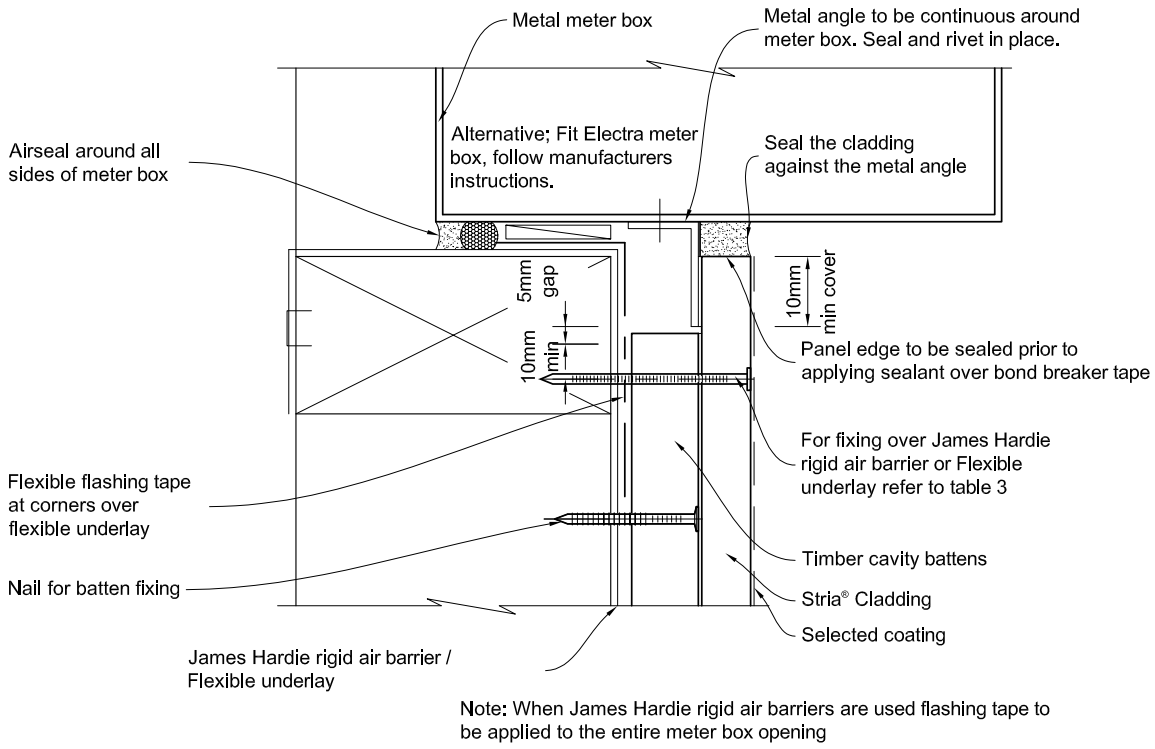

Figure 36: Meter box at jamb

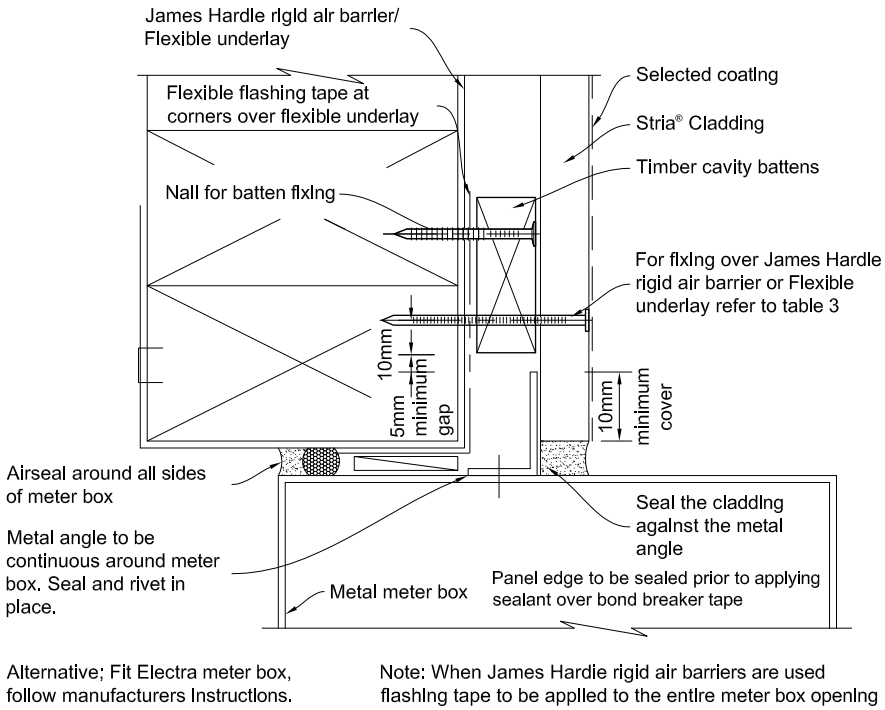

RECEIVED 12/12/2022

Bcon22/0752 - WDC Approved Plans - 17/01/2023

Figure 37: Meter box at head

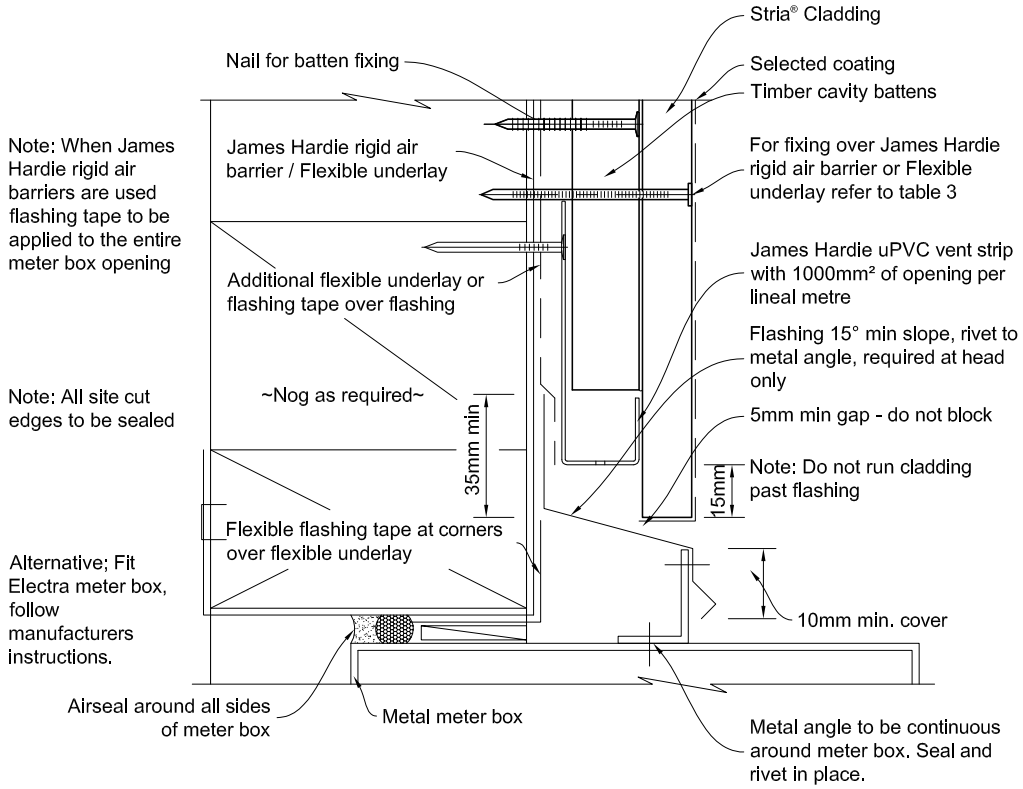

Figure 38: Enclosed deck

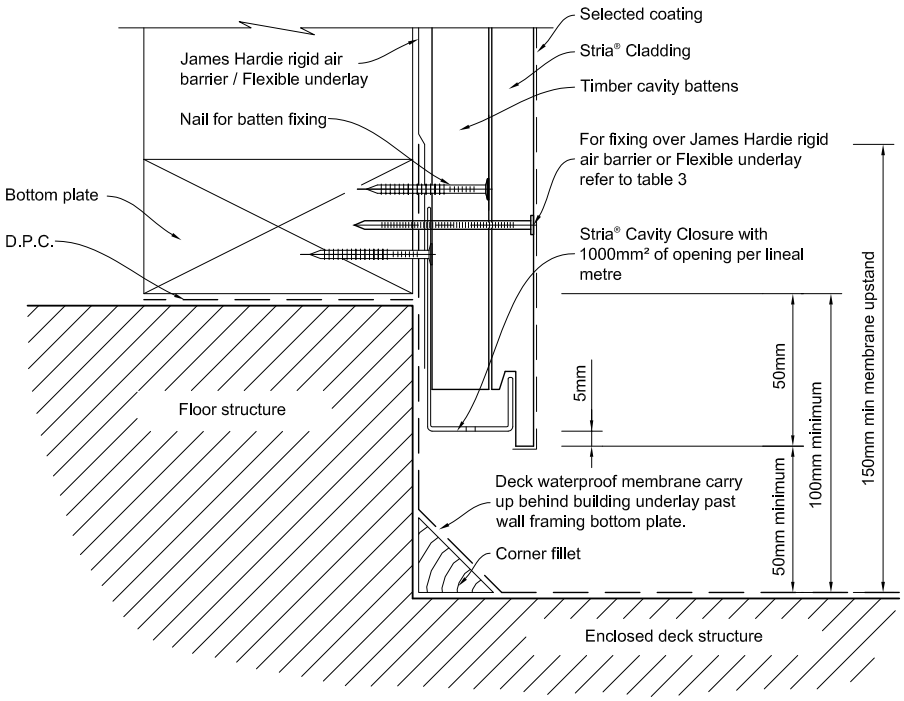

RECEIVED 12/12/2022

Bcon22/0752 - WDC Approved Plans - 17/01/2023

Figure 39: Garage door jamb

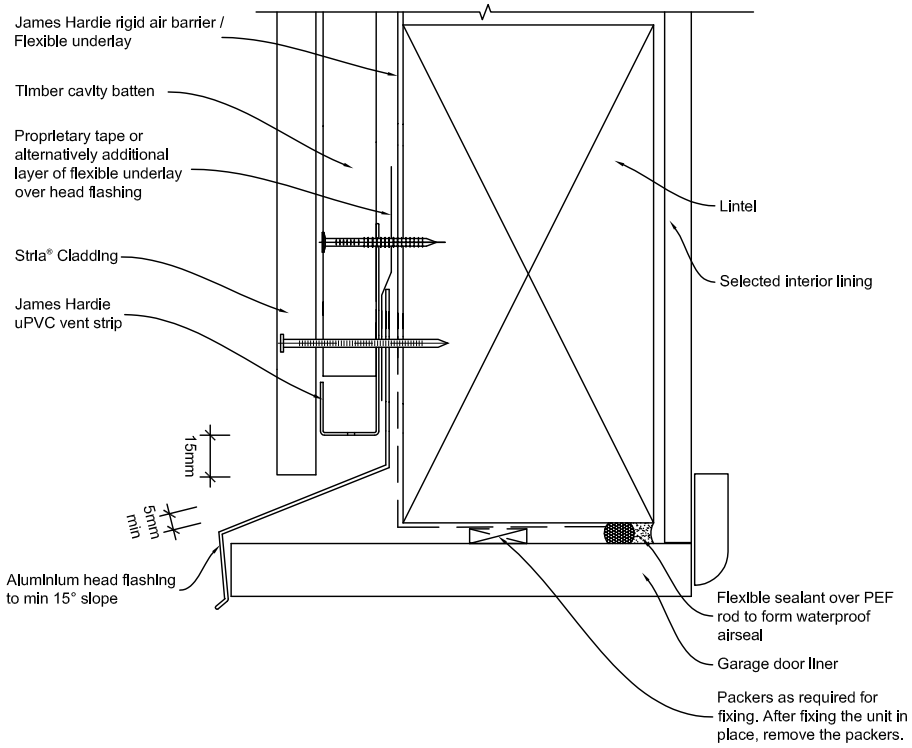

Sealant must be applied between head flashing and trim in VH and EH wind zones and SED wind pressures.

Figure 40: Garage door head

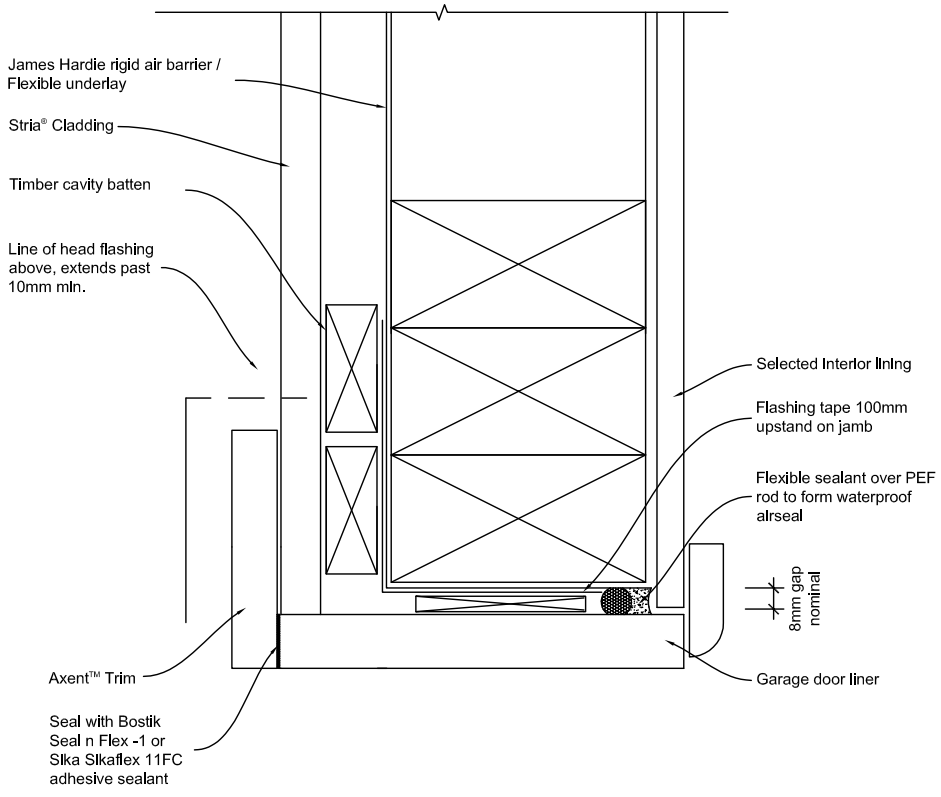

RECEIVED 12/12/2022

Bcon22/0752 - WDC Approved Plans - 17/01/2023

Notes

RECEIVED 12/12/2022

Bcon22/0752 - WDC Approved Plans - 17/01/2023

Notes

RECEIVED 12/12/2022

Bcon22/0752 - WDC Approved Plans - 17/01/2023

Product Warranty

Stria™ CLADDING

James Hardie New Zealand Limited ("James Hardie") warrants for a period of 15 years from the date of purchase that the Stria ® Cladding (the "Product"), will be free from defects due to defective factory workmanship or materials and, subject to compliance with the conditions below, will be resistant to cracking, rotting, fire and damage from termite attacks to the extent set out in James Hardie's relevant published literature current at the time of installation. James Hardie warrants for a period of 15 years from the date of purchase that the accessories supplied by James Hardie will be free from defects due to defective factory workmanship or materials.

Nothing in this document shall exclude or modify any legal rights a customer may have under the Consumer Guarantees Act or otherwise which cannot be excluded or modified at law.

CONDITIONS OF WARRANTY:

The warranty is strictly subject to the following conditions:

a) James Hardie will not be liable for breach of warranty unless the claimant provides proof of purchase and makes a written claim either within 30 days after the defect would have become reasonably apparent or, if the defect was reasonably apparent prior to installation, then the claim must be made prior to installation;

b) this warranty is not transferable;

c) the Product must be installed and maintained strictly in accordance with the relevant James Hardie literature current at the time of installation and must be installed in conjunction with the components or products specified in the literature. Further, all other products, including coating and jointing systems, applied to or used in conjunction with the Product must be applied or installed and maintained strictly in accordance with the relevant manufacturer's instructions and good trade practice;

d) the project must be designed and constructed in strict compliance with all relevant provisions of the current New Zealand Building Code ("NZBC"), regulations and standards;

e) the claimant's sole remedy for breach of warranty is (at James Hardie's option) that James Hardie will either supply replacement product, rectify the affected product or pay for the cost of the replacement or rectification of the affected product;

f) James Hardie will not be liable for any losses or damages (whether direct or indirect) including property damage or personal injury, consequential loss, economic loss or loss of profits, arising in contract or negligence or howsoever arising. Without limiting the foregoing James Hardie will not be liable for any claims, damages or defects arising from or in any way attributable to poor workmanship, poor design or detailing, settlement or structural movement and/or movement of materials to which the Product is attached, incorrect design of the structure, acts of God including but not limited to earthquakes, cyclones, floods or other severe weather conditions or unusual climatic conditions, efflorescence or performance of paint/coatings applied to the Product, normal wear and tear, growth of mould, mildew, fungi, bacteria, or any organism on any Product surface or Product (whether on the exposed or unexposed surfaces);

g) all warranties, conditions, liabilities and obligations other than those specified in this warranty are excluded to the fullest extent allowed by law;

h) if meeting a claim under this warranty involves re-coating of Products, there may be slight colour differences between the original and replacement Products due to the effects of weathering and variations in materials over time.

Disclaimer: The recommendations in James Hardie's literature are based on good building practice, but are not an exhaustive statement of all relevant information and are subject to conditions (c), (d), (f) and (g) above. James Hardie has tested / assessed the performance of the Stria™ Cladding when installed in accordance with the Stria™ Cladding Timber Cavity Batten technical specification, in accordance with the standards and verification methods required by the NZBC and those test results demonstrate the product complies with the performance criteria established by the NZBC. However, as the successful performance of the relevant system depends on numerous factors outside the control of James Hardie (e.g. quality of workmanship and design) James Hardie shall not be liable for the recommendations made in its literature and the performance of the relevant system, including its suitability for any purpose or ability to satisfy the relevant provisions of the NZBC, regulations and standards, as it is the responsibility of the building designer to ensure that the details and recommendations provided in the relevant James Hardie installation manual are suitable for the intended project and that specific design is conducted where appropriate.

Copyright April 2019. © James Hardie New Zealand Limited. TM and ® denotes a Trademark or Registered Mark owned by James Hardie Technology Limited.

RECEIVED 12/12/2022

Bcon22/0752 - WDC Approved Plans - 17/01/2023

James Hardie



RECEIVED 12/12/2022

Copyright April 2019. © James Hardie New Zealand Limited. TM and ® denotes a Trademark or Registered Mark owned by James Hardie Technology Limited.

Bcon22/0752 - WDC Approved Plans - 17/01/2023

GIB® EzyBrace® Systems

Specification and installation manual



RECEIVED 12/12/2022

CBI 5113
AUGUST 2016

Bcon22/0752 - WDC Approved Plans - 17/01/2023



NATIONAL SUPPORT

VISIT: Winstone Wallboards Limited
37 Felix Street, Penrose,
Auckland 1061, New Zealand
POST: PO Box 12 256, Penrose 1642,
Auckland, New Zealand
PHONE: +64 9 633 0100
FAX: +64 9 633 0101
Free Fax: 0800 229 222
EMAIL: info@gib.co.nz
WEB: gib.co.nz

GIB® HELPLINE

0800 100 442

RECEIVED 12/12/2022

Bcon22/0752 - WDC Approved Plans - 17/01/2023

Based on learnings derived from the 2011 Canterbury earthquakes GIB EzyBrace® Systems have been updated to offer improved design flexibility and further simplification of the bracing design and build process.

NEW GIB EZYBRACE® 2016 DESIGN SOFTWARE

- Improved user interface with simplified bracing design process.
- Increased functionality including exterior line check function, easy insert/deletion of bracing elements and built in software help function.
- Includes the new GIB® Bracing element GS2- NOM
- Allows the GIBFix® Framing System to be used in GIB EzyBrace® designs.

NEW GIB® BRACING ELEMENT GS2-NOM

- Allows internal walls lined with GIB® plasterboard on both sides and fastened off as per the standard fixing requirements of the current GIB® Site Guide to contribute to bracing resistance.
- Potentially reduces the amount of fasteners[1]
- Encourages more even bracing distribution throughout the building.

[1] Actual savings dependent on building and bracing design

UPDATE TO OPENINGS IN BRACING ELEMENTS AND CEILING DIAPHRAGMS

- Large hole specification updated to use a more conservative methodology.
- Guidance included for fireplace flues and range hoods.

NEW — GIBFIX® FRAMING SYSTEM

- Reduced potential for fastener pop and joint cracking as a result of timber frame movement.
- Reduced potential for on-site call backs.
- Improved thermal performance.
- Reinforced plasterboard junctions.

RECEIVED 12/12/2022

BRANZ Appraised
Appraisal No.928 [2016]

Bcon22/0752 - WDC Approved Plans - 17/01/2023

CONTENTS

System Summary **5**
GIB EzyBrace® Systems — August 2016 5
GIB® Plasterboard Substitution Table 5

Introduction **6**
Scope of Use 6
Finish Quality — Framing and Substrates 6
New GIBFix® Framing Systems 6
New GS2-NOM Bracing Element 6
Compliance with the NZ Building Code 7
CAD Design Detail 7
Appraisal 7

Bracing Resistance and Demand **8**
Bracing Resistance 8
Bracing Demand 9
Software Functionality 10

Design and Construction **12**
GIB® Plasterboard Linings 12
GIB EzyBrace® Systems in Water-Splash Areas 12
Renovation 12
Openings in Bracing Elements 12
Timber Framing 13
GIBFix® Framing System (Alternative Layout) 13
Guidelines for Intersection Walls 13
Top Plate Connections 14
Parapets and Gable End Walls 14
Bottom Plate Fixing 14
Bracing Strap Installation 15
GIB HandiBrac® Installation 16
GIB HandiBrac® Placement with GIBFix® Framing System Layout 17
Ceiling Diaphragms 18
Ceiling Battens in Ceiling Diaphragms 19
Openings in Ceiling Diaphragms 20
Length of GIB EzyBrace® Elements ('N' Type) 21
Length of GIB EzyBrace® Elements ('H' Type) 22

System Specifications **23**
GIB EzyBrace® Systems Specification — GS1-N 23
GIB EzyBrace® Systems Specification — GS2-NOM 24
GS2-NOM Adhesive Fixing Option at Door Jambs 25
GIB EzyBrace® Systems Specification — GS2-N 26
GIB EzyBrace® Systems Specification — GSP-H 27
GIB EzyBrace® Systems Specification — BL1-H 28
GIB EzyBrace® Systems Specification — BLG-H 29
GIB EzyBrace® Systems Specification — BLP-H 30

Sustainability and the Environment **31**

RECEIVED 12/12/2022

Bcon22/0752 - WDC Approved Plans - 17/01/2023

GIB EzyBrace® Systems — August 2016

Winstone Wallboards Ltd accepts no liability if GIB EzyBrace® Systems are not designed and installed in strict accordance with instructions contained in this publication.

USE ONLY THE CURRENT SPECIFICATION

This publication may be superseded by a new publication at any time. Winstone Wallboards accepts no liability for reliance upon publications that have been superseded. Check for the current publication at gib.co.nz/library before using this publication. If you are unsure whether this is the current publication, call the GIB® Helpline on 0800 100 442.

GIB EzyBrace® 2011 software and specification literature remains valid until futher notice.

PATENTS

GIBFix® Framing System and GIB EzyBrace® Systems, including componentry and design method, have patents pending (NZ Patent Number 596691, NZ Patent 709159 pending) and design and other IP rights reserved.

Beware of substitution

The performance of GIB® Systems are very sensitive to design detailing and construction practices. All GIB® Systems have been developed specifically for New Zealand conditions and independently tested or assessed to ensure the required level of performance. It is important to use only GIB® branded components where specified and to closely follow the specified design details and construction practices, to be confident that the required level of performance and quality is achieved on site.

For further information call our GIB® Helpline on 0800 100 442.

GIB EzyBrace® Systems have been designed and tested using only the products specified. When additional GIB® plasterboard properties are required the table below provides acceptable alternative options.

	Acceptable alternative GIB® plasterboards								
Specified GIB® plasterboard	GIB® Standard	GIB Ultraline®	GIB Braceline/ Noiseline®	GIB Aqualine®	GIB Toughline®	GIB Fyreline®			
						10mm	13mm	16mm	19mm
GIB® Standard		OK	OK	OK	OK	Note 1 and 3			
GIB Braceline®	X	X		Note 2	OK	X	Notes 1, 2 and 3		

Note 1 *The fastener type and length must be as required for the relevant FRR system using the perimeter fixing pattern illustrated for the relevant bracing specification.*

Note 2 *The element must be 900mm or longer. Decrease perimeter fastener centres to 100mm. The bracing corner fastening pattern, as illustrated for the relevant specification applies to all four corners of the element. Panel hold-down fixings are required.*

Note 3 *Specify traditional wall framing layout (see figure 1) where a Fire Resistance Rating (FRR) is required.*

RECEIVED 12/12/2022

Bcon22/0752 - WDC Approved Plans - 17/01/2023

Scope of use

This document is a guide to wall bracing of light timber frame (LTF) buildings constructed in accordance with NZS3604:2011 Timber Framed Buildings and presents a simple and efficient method for calculating and incorporating bracing resistance. This information draws on recent experiences from seismic activity in New Zealand and seeks to minimise earthquake damage to plasterboard linings in LTF buildings.

This document outlines the main principles of bracing design and construction using GIB® plasterboard products and systems. Further detailed information can be found in the GIB® Bracing Supplement by visiting gib.co.nz/library. This 'live' on-line document is updated continuously in response to market feedback and Winstone Wallboards' development initiatives.

Finish quality — framing and substrates

Home owners are increasingly demanding a high quality of interior finish. Finish quality is heavily influenced by the substrate to which linings are fixed. Detailed information on 'Levels of Finish' is given in AS/NZS 2589 and the latest version of the GIB® Site Guide.

New GIBFix® Framing System

With increased NZ Building Code requirements and growing customer demand for thermal efficiency and high quality interior finishes, traditional framing practices present problems such as multiple framing members at wall intersections creating thermal 'bridges' and cavities where insulation cannot be installed effectively.

Figure 1 shows a traditional wall framing layout. Figure 2 shows the alternative GIBFix® Framing System layout.

Multiple timber framing members also take longer to dry resulting in an increased risk of fastener pops and blemishes resulting from timber frame movement.

The GIBFix® Framing System offers better thermal efficiencies and minimises potential joint imperfections resulting from interior linings being fixed to multiple timber framing members.

The GIBFix® Framing System can be used in conjunction with GIB EzyBrace® Systems.

Bracing resistance is not affected by the GIBFix® Framing System if the use of this alternative timber framing layout is preferred. Refer to the GIBFix® Framing System literature for more information.

Bracing ratings apply whether fixing is directly into timber or into the metal components, provided correct construction details, fastener types and centres are applied.

FIGURE 1: TRADITIONAL WALL FRAMING LAYOUT

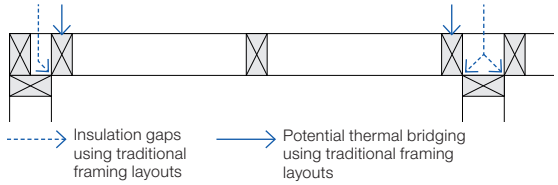

GFS004

FIGURE 2: GIBFIX® FRAMING SYSTEM (ALTERNATIVE LAYOUT)

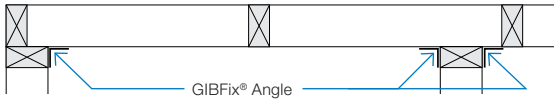

GFS005

NEW GS2-NOM Bracing Element

The new GS2-NOM bracing element allows most homes to be braced with a single lining type and less fixings so that a high quality finish is maintained throughout.

GS2-NOM permits the contribution of 'nominally fixed' internal walls. Higher performance elements are commonly specified on external walls and where limited wall area is available or adjacent to significant openings.

Winstone Wallboards recommends the use of the GIBFix® Framing System in conjunction with GS2-NOM elements. Key benefits of this approach include:

- Reduced potential for fastener pop and joint cracking of plasterboard linings.
- Enhanced thermal performance.
- Allows internal walls lined with GIB® plasterboard on both sides and fastened off as per the standard fixing requirements of the current GIB® Site Guide to contribute bracing resistance.
- Potentially reduces the amount of fasteners[1].
- Encourages more even bracing distribution throughout the building.

1. Actual savings dependent on building and bracing design.

RECEIVED 12/12/2022

Bcon22/0752 - WDC Approved Plans - 17/01/2023

Compliance with the NZ Building Code

NZBC CLAUSE B1 — STRUCTURE

The design and material specification for steel and timber framing used in conjunction with this literature must be in accordance with the performance requirements of NZBC Clause B1. GIB EzyBrace® Systems comply with the requirements of NZS 3604:2011, when designed and installed in accordance with this publication and relevant technical literature. NZS 3604:2011 is an acceptable solution to NZBC Clause B1.

NZBC CLAUSE B2 — DURABILITY

Under normal conditions of dry internal use GIB EzyBrace® Systems have a service life in excess of 50 years and satisfy the requirements of NZBC Clause B2. When in conditions of dry internal use, the components specified in this literature satisfy the requirements of NZBC Clause B2.

GIB® EzyBrace® Systems must not be specified in areas where 15 year durability applies and where linings are subject to direct water pressure, e.g. shower cubicle or shower over bath situations.

NZBC CLAUSE F2 — HAZARDOUS BUILDING MATERIALS

Under normal conditions of use, during handling, installation or serviceable life, the products detailed in GIB EzyBrace® Systems do not constitute a health hazard and meet the provisions of the NZBC Clause F2.

NZBC CLAUSE H1 — ENERGY EFFICIENCY

Buildings must be constructed to achieve an adequate degree of energy efficiency and the building envelope must provide adequate thermal resistance. The required thermal resistance (R-value) of timber framed external walls depends on climate zone but is commonly in the range from R 1.9 to R 2.0.

CAD design details

Where applicable drawings related to GIB EzyBrace® Systems have been produced for CAD design. These are identified by a unique number in the bottom corner of each detail box. CAD design details can be found at gib.co.nz/library.

Appraisal

GIB EzyBrace® Systems 2016 have been appraised by the Building Research Association of New Zealand (BRANZ), Appraisal No. 928 (2016) GIB EzyBrace® Systems, 2016.

It is of prime importance to comply with the details of design, construction and workmanship in this document.

RECEIVED 12/12/2022

Bcon22/0752 - WDC Approved Plans - 17/01/2023

Bracing resistance

WALL BRACING LAYOUT

When designing the bracing layout, carefully consider the final finished appearance and utilise full wall lengths where possible, avoiding unnecessary fastenings in the centre of a clear wall. Using the available wall length provides additional bracing and achieves improved aesthetics.

FIGURE 3: WALL BRACING LAYOUT

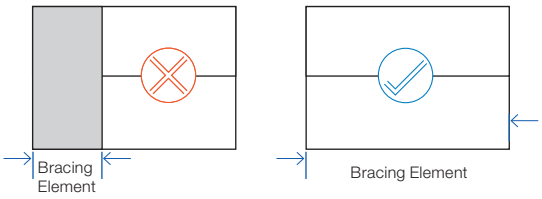

BRACING DISTRIBUTION

Distribute bracing by drawing a grid pattern of bracing lines along and across the building. Bracing lines must coincide as much as possible with the wall bracing elements. Pairs of elements may be counted on a single line provided they are no more than 2 metres apart and parallel. See figure 4.

Locate bracing evenly throughout the building and as close as practical to corners of external walls.

Space bracing lines no more than:

- 6 metres for standard construction with any GIB® plasterboard ceiling, or
- 7.5 metres where dragon ties in accordance with NZS3604:2011 have been installed, or
- 12 metres with a GIB® plasterboard ceiling diaphragm.

The construction of ceiling diaphragms is described in detail on p.18–20.

NZS3604:2011 requires that no bracing line shall have a capacity less than the greater of:

- 100 Bracing Units (BUs), or
- 15 x the external wall length (BUs) for bracing lines coinciding with external walls, or
- 50% of the total demand (D) divided by the number of lines (n) in the direction being considered (BUs).

FIGURE 4: BRACING GRID LAYOUT

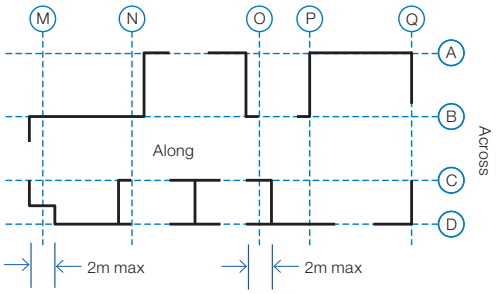

The NZS3604 ‘rules’ are merely minimum guidelines and compliance with them does not in itself ensure even distribution. The designer is responsible for checking distribution. Poor distribution can cause torsional effects and localised or more significant damage in an earthquake event.

GIB EZYBRACE® SYSTEMS

The GIB EzyBrace® Specification Numbering System (and sub-components thereof) is protected by copyright and makes specification and identification of GIB EzyBrace® Systems transparent.

- 'GS' stands for GIB® Standard.
- 'BL' for GIB Braceline®.
- 'P' for plywood.
- '1' and '2' for linings one or both sides.
- ‘N’ stands for 'no specific panel hold-down fixings'.
- 'H' stands for 'specific panel hold-down fixing' required.
- 'NOM' stands for 'nominal plasterboard fixing'. This refers to the standard fixing method used to install plasterboard as shown in the current GIB® Site Guide.

Where specific hold-down fixings are specified, refer to p.15-16. GIB HandiBrac® is fully contained within the framing cavity and does not interfere with lining installation and quality of finish.

Where no specific hold-down fixings are required, the minimum NZS3604:2011 bottom plate fixings apply.

Full bracing element construction details are provided in this technical literature.

Further general design and construction information can also be found in our GIB® Bracing Supplement by visiting gib.co.nz/library.

Specifying GIB EzyBrace® elements (minimum wall length 400mm)	
Inside lining external walls.	Nominate available lengths of wall as GS1-N elements. Use BL1-H if higher ratings are required. If the other side of the frame is lined with plywood consider GSP-H or BLP-H elements or use alternative proprietary bracing systems.
Internal walls (only one side available for bracing).	Nominate available lengths of wall as GS1-N elements. Use BL1-H if higher ratings are required.
Internal walls (both sides available for bracing).	Nominate available length of wall as GS2-NOM elements. Change to GS1-N if higher ratings are required. Change to GS2-N if higher ratings are required. Change to BLG-H for even higher ratings. Consider GSP-H or BLP-H if the opposite side is lined with plywood.

RECEIVED 12/12/2022

Bcon22/0752 - WDC Approved Plans - 17/01/2023

Bracing demand

GIB EZYBRACE® CALCULATOR

The GIB EzyBrace® calculator is a software tool to determine the wind and earthquake bracing demand and to design the bracing resistance for light timber-framed buildings constructed in accordance with NZS 3604:2011.

The updated GIB EzyBrace® calculator combines an up-to-date user-friendly interface with the latest knowledge relating to the performance of GIB® plasterboard in light timber-framed structures when subjected to high winds or earthquakes. The calculator can be down-loaded free of charge by visiting gib.co.nz/ezybrace and can be installed on either Microsoft® or Apple® Mac environments.

DEMAND

Wind and Earthquake 'Demand' calculates the forces a structure must be able to resist during its 'design life'. The GIB EzyBrace® calculator's Demand sheet determines the number of Bracing Units required depending on building location, building dimensions and materials used. The Demand sheet closely follows the familiar format of our Excel based GIB EzyBrace® calculator, and includes additional features such as a pop-up help facility explaining required input.

Bracing resistance sheets ('tabs') are added depending on the building specification entered. For example, subfloor bracing resistance tabs only show when a 'subfloor' foundation type has been selected.

The Demand sheet gives the designer the option to select a longer earthquake return period which represents a higher earthquake design force. The default for buildings constructed in accordance with NZS3604:2011 is an earthquake that has a 10% chance of being exceeded within the assumed 50 year 'design life' of a light timber framed residential structure, a 'return period' of 500 years.

Many commercial and public buildings are designed for the more stringent requirement of a 10% probability of exceedance in a 100 or 250 year life expectancy.

A screen shot of the GIB EzyBrace® 2016 Demand Sheet and Help Facility is shown in figure 5.

FIGURE 5: GIB EZYBRACE® 2016 — DEMAND CALCULATION SHEET AND 'POP UP' HELP FACILITY

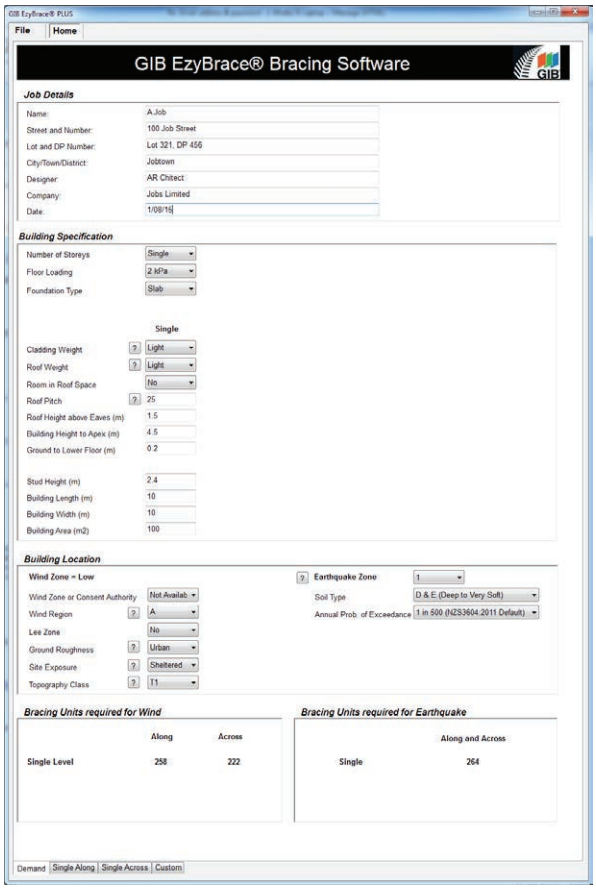

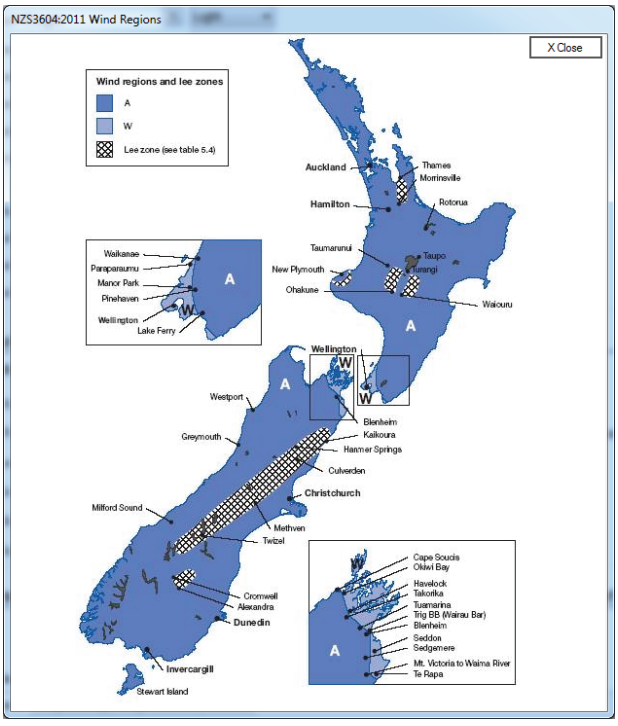

Download GIB EzyBrace® 2016 design software from gib.co.nz/ezybrace

RECEIVED 12/12/2022

Bcon22/0752 - WDC Approved Plans - 17/01/2023

Software functionality

Innovations adopted in the GIB EzyBrace® 2016 bracing 'resistance' calculation sheets include the ability to easily add and delete lines and elements during calculations.

The software compares bracing resistance achieved with demand and for wall bracing lines incorporating external walls, the external wall length can now be entered to check minimum bracing units required on that line. The NZS 3604:2011 rules and associated software output are not the only check. Designers must additionally check the building layout to ensure adequate bracing distribution.

Figures 6 and 7 show screen shots of the Wall and Subfloor Resistance Sheets respectively.

FIGURE 6: GIB EZYBRACE® 2016 — WALL BRACING RESISTANCE CALCULATION SHEET

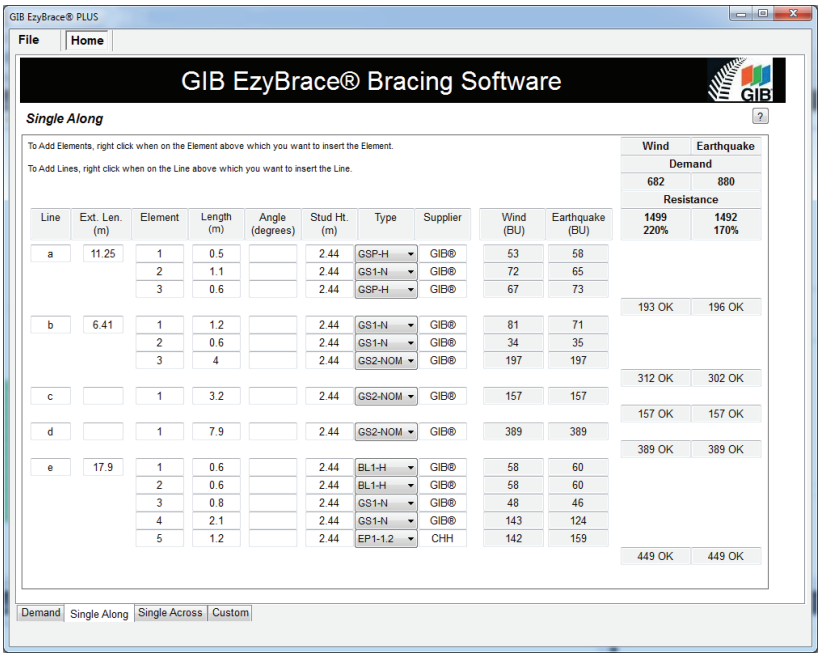

FIGURE 7: GIB EZYBRACE® 2016 — SUBFLOOR BRACING RESISTANCE CALCULATION SHEET

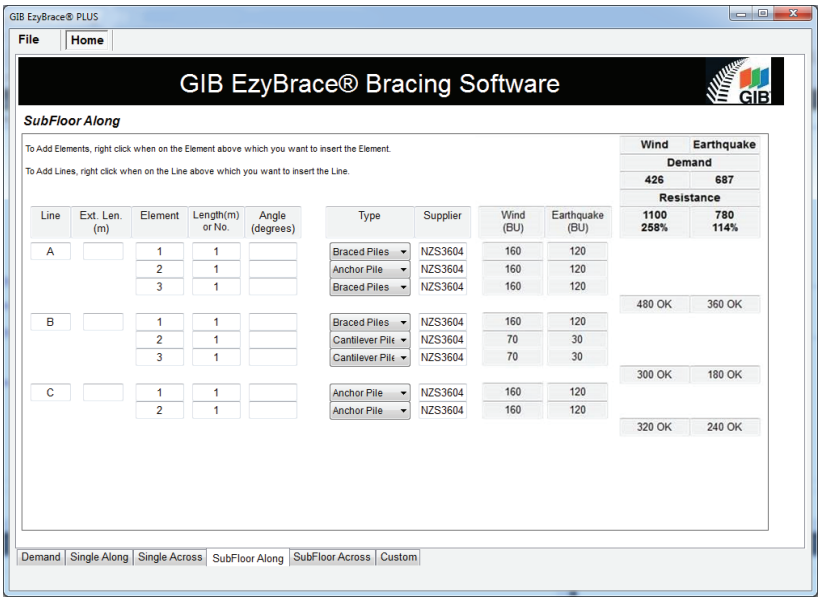

Download GIB EzyBrace® 2016 design software from gib.co.nz/ezybrace

RECEIVED 12/12/2022

Bcon22/0752 - WDC Approved Plans - 17/01/2023

Software functionality

Custom elements can be entered by accessing the 'custom' tab as shown in figure 8.

FIGURE 8: GIB EZYBRACE® 2016 — CUSTOM ELEMENTS SHEET

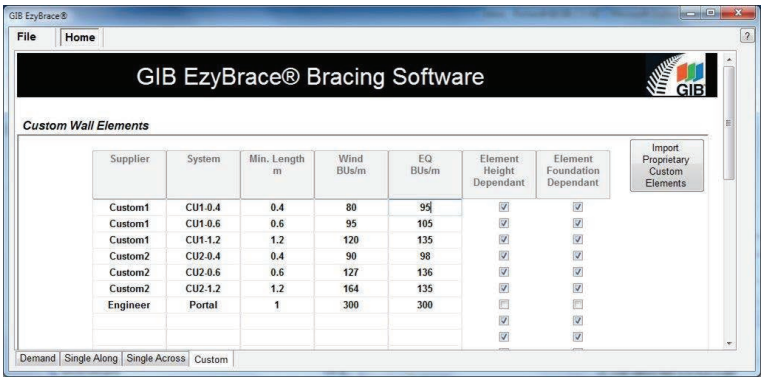

Note: Values and systems shown in Custom Elements Sheets are for illustrative purposes only.

Help can be accessed by pressing the ? symbol which displays a window with further information.

The GIB EzyBrace® 2016 software has a number of options that can be accessed via the File tab at the top left hand corner of the window. The options include: New, Save, Save As, Open, Recent and Print.

- The New option closes any opened job ready for the input of a new job.
- The Save option saves the currently opened job to the same filename and the Save As option saves the job to a new filename.
- The Open option prompts for the name of an existing job.
- The Recent option displays a list of the ten latest jobs and allows for the selection of one of these jobs to be opened.
- The Print option displays the print screen. In this screen, a print preview is displayed. The print preview can be copied to the clipboard by clicking the right-hand mouse button. Also on the print screen is the option to choose which pages are to be printed and the option to print the output to a portable data format, PDF, file.
- The Print Screen View is shown in figure 9.

FIGURE 9: GIB EZYBRACE® 2016 — PRINT SCREEN VIEW

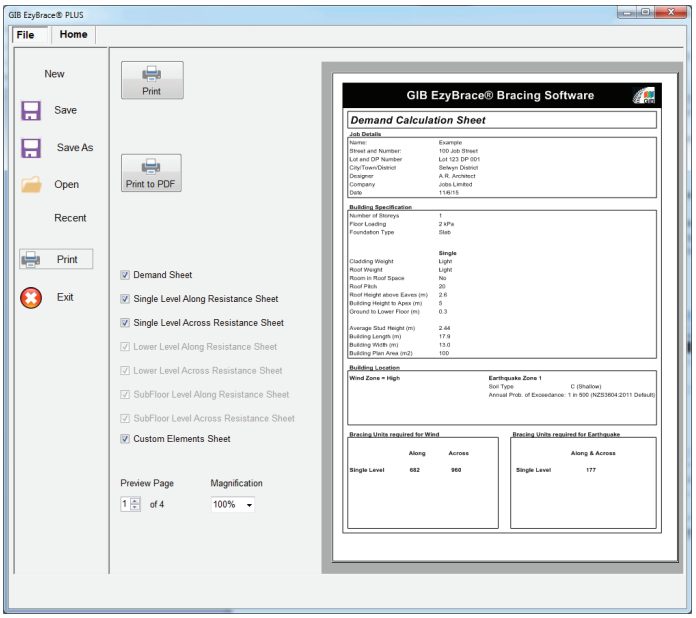

Download GIB EzyBrace® 2016 design software from gib.co.nz/ezybrace

RECEIVED 12/12/2022

Bcon22/0752 - WDC Approved Plans - 17/01/2023

GIB® plasterboard linings

When fixing part sheets of GIB® plasterboard, a minimum sheet width of 300mm applies for bracing elements. Horizontal fixing is recommended. If fixing vertically, full height sheets shall be used where possible. Where sheet end butt joints are unavoidable they must be formed over nogs or over the studs and fastened at 200mm centres. Alternatively, and preferably, sheet end butt joints may be back-blocked.

When a GIB® Bracing element has been designated for a section of wall, BU ratings cannot be increased by incorporating additional proprietary bracing elements within that same section of wall.

LIMITATIONS

- GIB® plasterboard must be stacked flat and protected from the weather.
- GIB® plasterboard must be handled as a finishing material.
- GIB® plasterboard in use must not be exposed to liquid water or be installed in situations where extended exposure to humidities above 90% RH can reasonably be expected.
- GIB EzyBrace® Systems must not be used in showers or behind baths.
- It is highly recommended not to install GIB® plasterboard in any situation where external claddings are not in place or the property is not adequately protected from the elements.
- If GIB® plasterboard is installed under these conditions, the risk of surface defects such as joint peaking or cracking is greatly increased.

GIB EzyBrace® Systems in water-splash areas

When GIB® plasterboard is installed in locations likely to be frequently exposed to liquid water it must have an impervious finish. Examples are adhesive fixed acrylic shower linings or ceramic tiles over an approved waterproof membrane over GIB Aqualine®. The NZBC requires 15 years durability in these situations. Bracing elements are required to have a durability of 50 years. Bracing elements are not to be located in shower cubicles or behind baths because of durability requirements, the likelihood of renovation, and practical issues associated with fixing bracing elements to perimeter framing members. Otherwise GIB EzyBrace® Systems can be used in water-splash areas as defined by NZBC Clause E3, provided these are maintained impervious for the life of the building.

For futher design details refer to the current GIB Aqualine® Wet Area Systems literature.

Renovation

When relining walls during the process of renovation, ensure that bracing elements are reinstated (check the building plans).

Openings in bracing elements

SMALL OPENINGS

Small openings (e.g. power outlets) of 90 x 90mm or less may be placed no closer than 90mm to the edge of the braced element. A block may need to be provided alongside the perimeter stud as shown below.

LARGE OPENINGS

Openings above 90 x 90mm such as switch boards, recessed cabinets and TV's etc. should be placed outside of the bracing element or locate bracing on the other side of the wall framing.

FIGURE 10: SMALL OPENINGS IN BRACING ELEMENTS

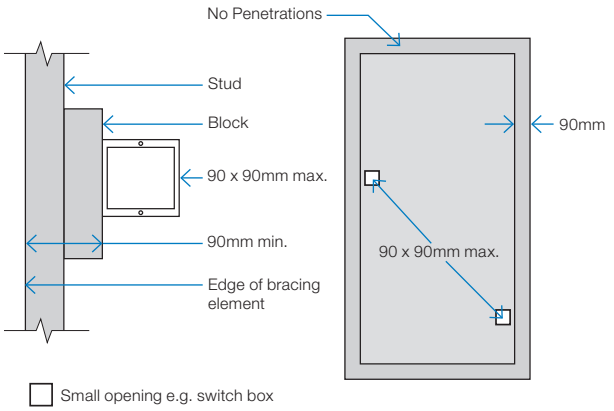

GEB001

FIGURE 11: LARGE OPENINGS AND BRACING ELEMENTS

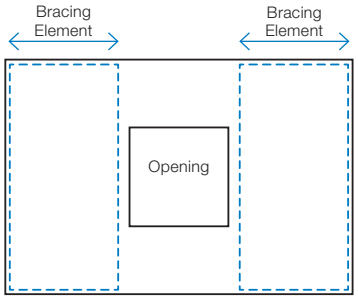

RECEIVED 12/12/2022

Bcon22/0752 - WDC Approved Plans - 17/01/2023

Timber framing

General framing requirements such as grade, spacings and installation shall comply with the provisions of NZS 3604:2011. To achieve the published bracing performance the minimum actual framing dimensions are 90 x 45mm for external walls and 70 x 45mm for internal walls.

As a minimum the use of Kiln Dried Stress Graded timber for all wall, roof and mid-floor framing members is recommended.

GIBFix® Framing System (alternative layout)

Practices recommended as part of the GIBFix® Framing System aim to increase timber framing efficiencies, reduce reliance on unnecessary framing at wall junctions and minimise surface imperfections that commonly arise from constructing plasterboard junctions over multiple timber members. GIBFix® Angles fixed to a single timber framing member are introduced to tie together plasterboard junctions, improving seismic resilience and decrease the risk of future defects due to timber movement. The GIBFix® Framing System can be used in conjunction with the GIB EzyBrace® System.

Note: GIBFix® Angles and 32mm x 7g GIB® Grabber® Dual Thread Screws may also be used in traditional wall framing layouts and in GIB EzyBrace® Systems.

When the GIBFix® Framing System is used a minimum of 2 equally spaced nogs for walls between 2.4m and 3m in height are required at corners and wall junctions.

When used in GIB EzyBrace® systems GIBFix® Angles must run from top to bottom on all applicable studs. If 2 GIBFix® Angles are required on a stud they must be overlapped by a minimum of 300mm with 2/32mm 7g GIB® Grabber® Dual Thread Screws penetrating through both GIBFix® Angles.

For full specification details refer to GIBFix® Framing System literature available at gib.co.nz/gibfix.

Guidelines for intersection walls

GIB® Bracing Elements may have intersecting walls with a minimum length of 200mm. Fasteners are required around the perimeter of the bracing element. Vertical joints at T-junctions shall be fixed and jointed as specified for intermediate sheet joints. The bracing element length must be no less than 900mm.

Where a Wall Bracing Element is interrupted by a T-junction the element is deemed to be continuous for the whole length (900mm minimum in the example illustrated).

When fixing part sheets of GIB® plasterboard to the side of a T-junction, a minimum width of 300mm applies for bracing elements. See figures 12 and 13.

FIGURE 12: WALL INTERSECTION (TRADITIONAL WALL FRAMING)

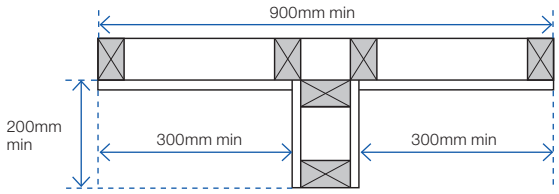

GEB002

FIGURE 13: WALL INTERSECTION (GIBFIX® FRAMING SYSTEM)

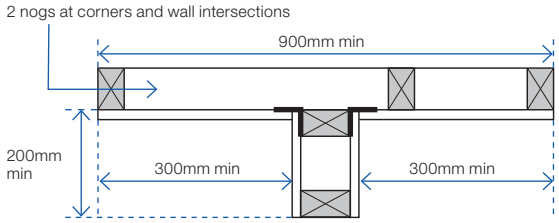

GEB003

FIGURE 14: CORNER INTERSECTION (GIBFIX® FRAMING SYSTEM)

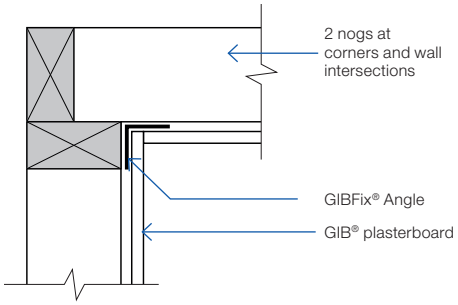

GFS001

FIGURE 15: WALL INTERSECTION FASTENER PLACEMENT

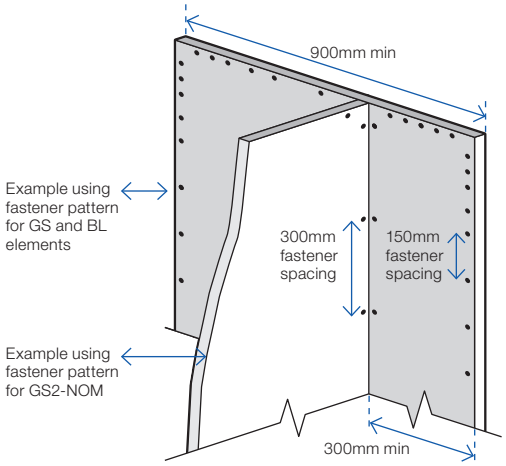

Junction

Min 32mm x 6g GIB® Grabber® High Thread or 32mm x 7g GIB® Grabber® Dual Thread Screws @ 300mm ctrs each side.

RECEIVED 12/12/2022

Bcon22/0752 - WDC Approved Plans - 17/01/2023

Top plate connections

For top plate connections refer to NZS3604:2011 section 8.7.3.

Parapets and gable end walls

Bracing elements must be fixed from top plate to bottom plate. Fixing to a row of nogs is not acceptable unless either:

A continuous member such as an ex 90 x 45mm ribbon plate is fixed across the studs just above a row of nogs at the ceiling line, as shown in figure 16.

or

GIBFix® Angle as shown in figure 17. The angle is fixed to a row of nogs with 30 x 2.5mm galv flat head nails or 32mm x 7g GIB® Grabber® Dual Thread Screws at 300mm centres.

Bottom plate fixing

TIMBER FLOOR

For elements with an 'N' specification use 2/100 x 3.75mm hand or 3/90 x 3.15mm power-driven nails at 600mm centres.

In addition, for elements with an 'H' specification, use GIB HandiBrac® panel hold-down fixings at each end of the bracing element, see p.16.

CONCRETE FLOOR — EXTERNAL WALL BRACING ELEMENTS

For bracing elements with an 'N' specification fix external wall plates in accordance with NZS 3604:2011.

Use GIB HandiBrac® panel hold-down fixings at each end of bracing elements with an 'H' specification and minimum intermediate fixings as required by NZS 3604:2011.

CONCRETE FLOOR — INTERNAL WALL BRACING ELEMENTS

For bracing elements with an 'N' specification fix plates in accordance with NZS 3604:2011 or use 75 x 3.8mm shot-fired fasteners with 16mm discs spaced at 150 and 300mm from end-studs and 600mm centres thereafter.

For bracing elements with an 'H' specification use GIB HandiBrac® panel hold-down fixings at each end of the element and minimum intermediate fixings as required by NZS 3604:2011.

FIGURE 16: PARAPETS AND GABLE ENDS WITH RIBBON PLATE

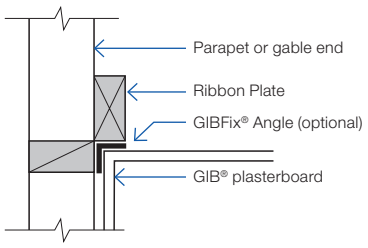

FIGURE 17: PARAPETS AND GABLE ENDS WITH GIBFIX® ANGLE

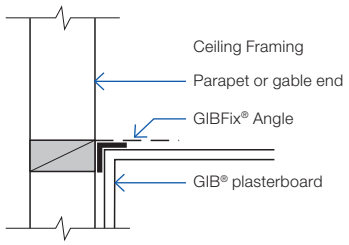

GFS003

BOTTOM PLATE FIXINGS FOR GIB® BRACING ELEMENTS

Brace type	Concrete slabs		Timber floors
	External wall	Internal wall	External and Internal walls
GS1-N	As per NZS 3604:2011. No specific additional fastening required.	As per NZS 3604:2011. Alternatively use 75 x 3.8mm shot-fired fasteners with 16mm discs, 150mm and 300mm from each end of the bracing element and at 600mm thereafter.	Pairs of 100 x 3.75mm flat head hand driven nails or 3/90 x 3.15mm power driven nails at 600mm centres in accordance with NZS 3604:2011.
GS2-N	Not applicable.		
GS2-NOM			
GSP-H BL1-H BLP-H	Intermediate fastenings to comply with NZS 3604:2011 In addition: GIB HandiBrac® fixings or metal wrap-around strap fixings and bolt as illustrated on p.15 and 16.		Pairs of 100 x 3.75mm flat head hand driven nails or 3/90 x 3.15mm power driven nails at 600mm centres in accordance with NZS 3604:2011. In addition: GIB HandiBrac® fixings or metal wrap-around strap fixings and bolt as illustrated on p.15 and 16.
BLG-H	Not applicable	As for GSP-H, BL1-H, BLP-H on concrete slab as illustrated on p.15 and 16.	

RECEIVED 12/12/2022

Bcon22/0752 - WDC Approved Plans - 17/01/2023

Bracing strap installation

Care needs to be taken with the installation of the bracing strap. It should be checked in to be flush with the face of the stud providing a flat substrate for the plasterboard and positioned in such a way that the corner fastenings of the bracing element are not affected by it. Keeping the strap to the edge of the end stud as shown will allow the corner fastenings to be installed without having to penetrate the bracing strap.

Concrete floor	Timber floor
400 x 25 x 0.9mm galvanised strap to pass under the plate and up the other side of the stud. Six 30 x 2.5mm flat head galvanised nails to each side of the stud. Three 30 x 2.5mm flat head galvanised nails to each side of the plate. Hold down bolt with 50 x 50 x 3mm washer to be fitted within 80mm of the end of the element.	
Internal wall	
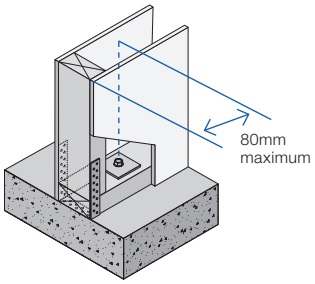 GEB004	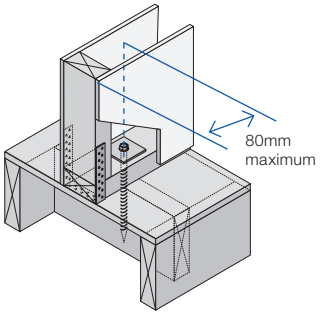 GEB005
External wall	
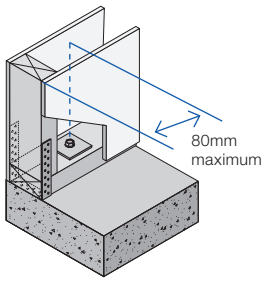 GEB006	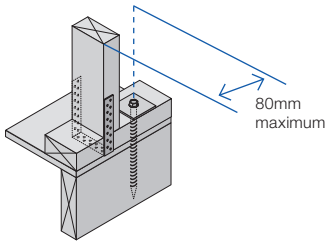 GEB007
Note: Where applicable drawings have been produced for CAD design. These are identified by a unique number in the bottom corner of each detail box that can be found at gib.co.nz/library.	2/300 x 25 x 0.9mm galvanised straps with six 30 x 2.5mm flat head galvanised nails to each stud and into the floor joist and three nails to the plate. Block to nog fixed with 3/100 x 3.75mm nails to stud.
	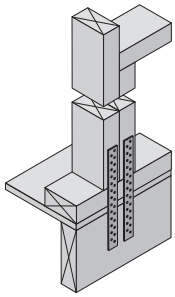 GEB008

Hold-down fastener requirements	
Concrete floor	Timber floor
A mechanical fastening with a minimum characteristic uplift capacity of 15kN fitted with a 50 x 50 x 3mm square washer within 80mm of the ends of the bracing element.	12 x 150mm galvanised coach screw fitted with a 50 x 50 x 3mm square washer within 80mm of the ends of the bracing element

RECEIVED 12/12/2022

Bcon22/0752 - WDC Approved Plans - 17/01/2023

GIB HandiBrac® installation

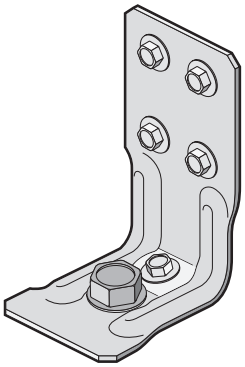

Developed in conjunction with MiTek™, the GIB HandiBrac® has been designed and tested by Winstone Wallboards for use in GIB EzyBrace® elements that require hold-downs. The GIB HandiBrac® is a substitute for bottom plate hold-down straps.

- Quick and easy to fit.
- May be fitted at any stage before lining.
- Framing face is clear to allow flush lining.
- Easily inspected.

The GIB HandiBrac® with BOWMAC® blue head screw bolt is suitable for timber and concrete floors constructed in accordance with NZS 3604:2011.

Concrete floor		Timber floor	
External walls	Internal walls	External walls	Internal walls
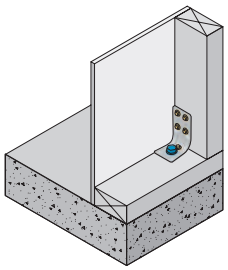 GEB009	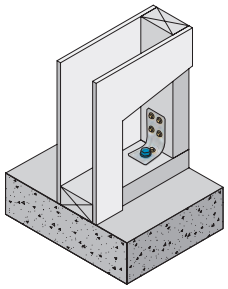 GEB010	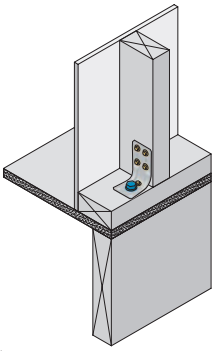 GEB011	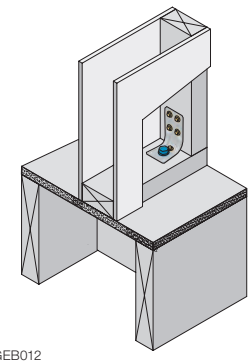 GEB012
Position GIB HandiBrac® as close as practicable to the internal edge of the bottom plate.	Position GIB HandiBrac® at the stud/plate junction and at mid-width of plate.	Position GIB HandiBrac® flush with the outside stud face, as close as practicable to the centre of the boundary joist.	Position GIB HandiBrac® in the centre of floor joist or full depth solid block.
Hold-down fastener requirements			
A mechanical fastening with a minimum characteristic uplift capacity of 15kN or use supplied BT10/140 screwbolt in GIB HandiBrac® pack.		12 x 150mm galvanised coach screw or use supplied BT10/140 screwbolt in GIB HandiBrac® pack.	

RECEIVED 12/12/2022

Bcon22/0752 - WDC Approved Plans - 17/01/2023

GIB HandiBrac® placement with GIBFix® Framing System for concrete floors

Figure 18 shows the preferred positioning of the GIB HandiBrac® panel hold-down brackets within the GIBFix® Framing System layout and where they are required by bracing systems with an 'H' in the specification code.

Note that, in corners and at wall junctions, a single GIB HandiBrac® can serve 'H' type bracing elements in both directions, but additional intermediate concrete anchors may need to be installed to meet the minimum requirements of NZS 3604:2011 for bottom plate fixing.

The GIB HandiBrac® is fixed to the stud which has the GIBFix® Angle.

For bracing elements with sheet material both sides of the wall connect corner studs using 8/90mm gun nails as shown in figure 19.

TIMBER FLOORS

For timber floors bolt fixing in to solid joist or block is required, as shown on p 15.

FIGURE 18: GIB HANDIBRAC® PLACEMENT WITH GIBFIX® FRAMING SYSTEM LAYOUT

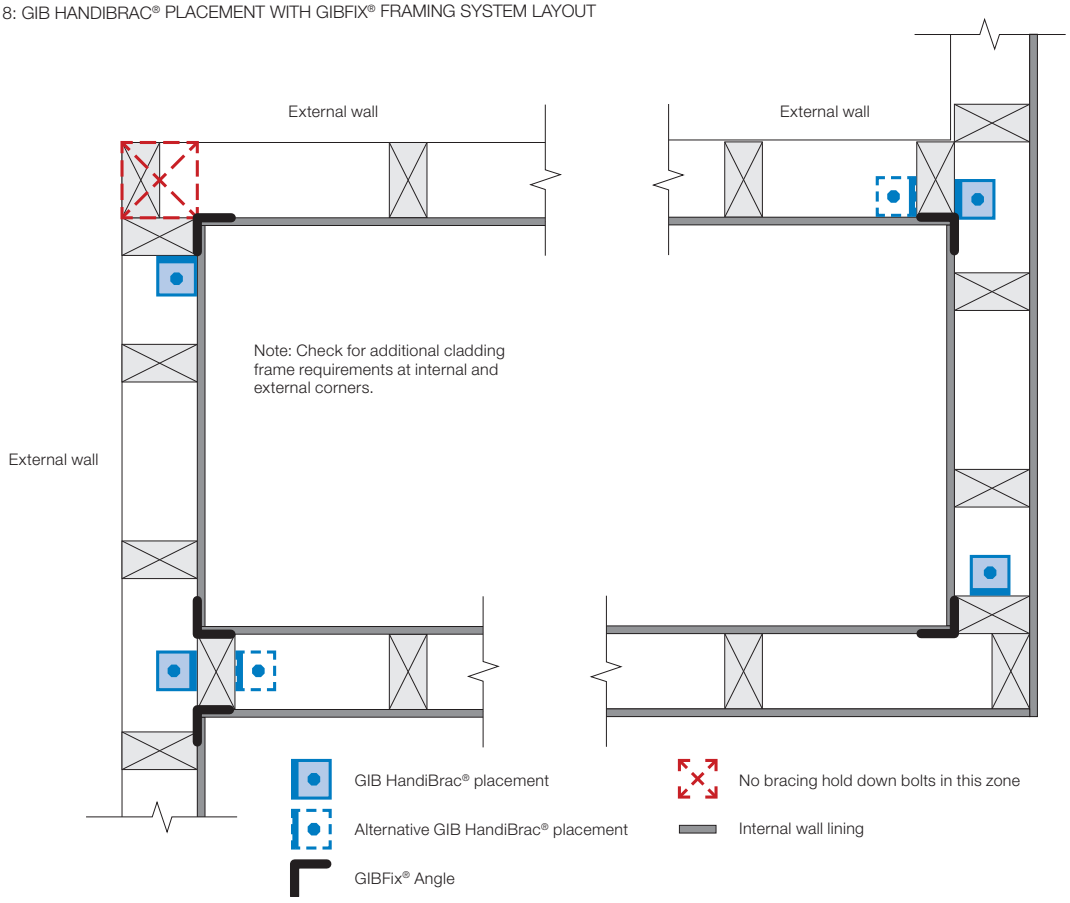

GEB013

FIGURE 19: STUD CONNECTION FOR 'H' TYPE BRACING ELEMENTS WITH SHEET MATERIAL BOTH SIDES

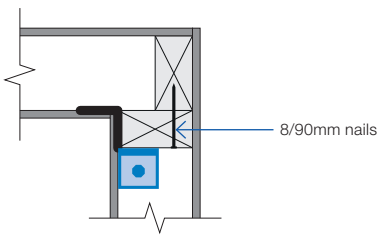

GEB014

RECEIVED 12/12/2022

Bcon22/0752 - WDC Approved Plans - 17/01/2023

Ceiling diaphragms

GIB® plasterboard ceiling diaphragms are stiff and strong horizontal elements which effectively transfer loads to bracing walls. They themselves do not have a bracing unit rating but are used when bracing lines exceed 6m separation. The basic shape of a ceiling diaphragm is square or rectangular. Protrusions are permitted but cut-outs are not. The length of a ceiling diaphragm shall not exceed twice its width. Dimensions are measured between supporting bracing lines. Supporting bracing lines shall have a bracing capacity no less than the greater of 100 bracing units or 15 bracing units per metre of diaphragm dimension, measured at right angles to the line being considered, see figure 21.

Limitations for GIB® plasterboard ceiling diaphragms

Ceiling diaphragms may be constructed using any GIB® plasterboard provided perimeter fixing is at;

150mm centres for: Diaphragms up to 7.5m in length, no steeper than 15°.

100mm centres for: Diaphragms up to 7.5m in length, no steeper than 45°. Diaphragms up to 12m in length, no steeper than 25°.

Diaphragms outside these parameters must be specifically designed.

General fixing requirements for GIB® Ceiling Diaphragms:

- Linings must be installed over the entire area of the diaphragm.
- Fastening must be no less than 12mm from sheet edges and not less than 18mm from sheet ends.
- Sheets must be supported by framing members (e.g., ceiling battens) spaced at no more than 500mm centres for 10mm GIB® plasterboard and at no more than 600mm centres for 13mm GIB® plasterboard.
- Sheets within the diaphragm area may be fastened and finished conventionally in accordance with the publication entitled, “GIB® Site Guide”. All joints shall be GIB® Joint Tape reinforced and stopped. It is recommended that sheet butt joints are formed off framing and back-blocked (see “GIB® Site Guide”).
- Use full width sheets where possible. At least 900mm wide sheets with a length not less than 1800mm shall be used. Sheets less than 900mm wide but no less than 600mm may be used provided all joints with adjacent sheets are back-blocked (see “GIB® Site Guide” and figure 22).
- Fasteners are placed at the specified centres around the ceiling diaphragm with the corners fastened using the GIB EzyBrace® fastener pattern.

FIGURE 20: PROTRUSIONS AND CUTOUTS

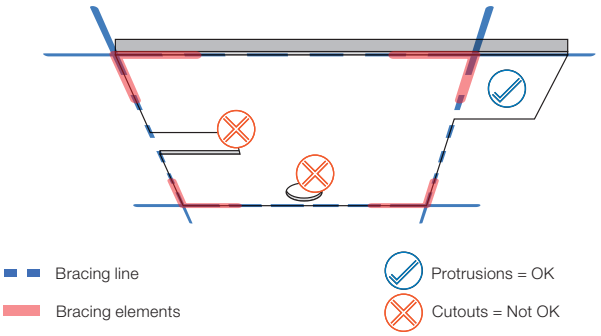

FIGURE 21: DIAPHRAGM BRACING LINING SPACINGS

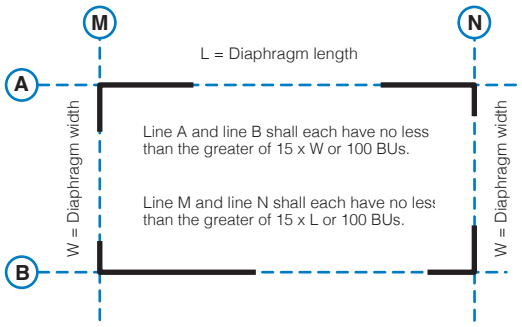

FIGURE 22: GIB® CEILING DIAPHRAGM SHEET WIDTHS AND LENGTHS

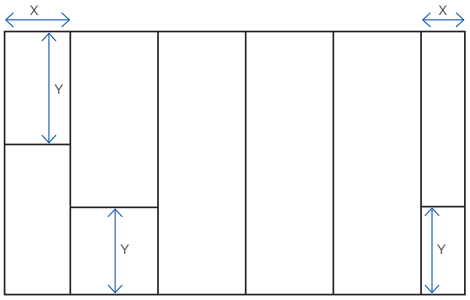

X = 900mm min or 600–900mm min provided all adjacent joints are back-blocked.
Y = 1800mm min sheet lengths at ends of ceiling diaphragms.

FIGURE 23: GIB EZYBRACE® FASTENER PATTERN

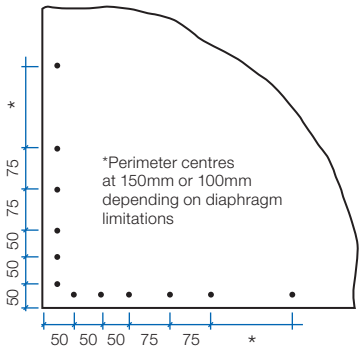

Unless stated all fastener spacings are maximums.

GEB015

RECEIVED 12/12/2022

Bcon22/0752 - WDC Approved Plans - 17/01/2023

Ceiling battens in ceiling diaphragms

Ceiling diaphragms may be constructed using steel or timber ceiling battens.

Battens shall be spaced at a maximum of:
- 500mm for 10mm GIB® plasterboard.
- 600mm for 13mm GIB® plasterboard.

Timber battens shall be fixed in accordance with the requirements of NZS 3604:2011.

Metal battens shall be GIB® Rondo® battens with two external flanges of 8mm to allow direct screw fixing to roof framing.

GIB® Rondo® metal battens shall be fixed with 2/32mm x 8g GIB® Grabber® Wafer Head Self Tapping screws to supporting framing.

GIB® Rondo® metal battens must be fixed directly to the roof framing. If a clip system has been used, a timber block (min 300mm) or a continuous timber member can be fixed alongside the bottom chord to permit a direct connection to the batten, see figure 26.

For GIB® Rondo® metal battens, a GIB® Rondo® metal channel or metal angle is required at the perimeter of the diaphragm. The perimeter channel shall be fastened to the top plate with 32mm x 8g GIB® Grabber® Wafer Head Self Tapping screws or 32mm x 7g GIB® Grabber® Dual Thread screw at 300mm centres maximum.

Linings are fastened to metal using 25mm x 6g GIB® Grabber® Self Tapping screws and to timber framing using 32mm x 6g GIB® Grabber® High Thread screws. Alternatively 32mm x 7g GIB® Grabber® Dual Thread screws can be used in both cases. Fastener centres are specified on p.18.

Coved ceiling diaphragms can be achieved by using nominally 32 x 32 x 0.55mm proprietary galvanised metal angles ("back-flashing") at the changes in direction. These angles shall be:
- Fastened at 300mm on each edge to metal battens using 32mm x 8g GIB® Grabber® Wafer Head Self Tapping screws or 32mm x 7g GIB® Grabber® Dual Thread screws.
- Fastened to timber framing using 32mm x 7g GIB® Grabber® Dual Thread screws when linings are installed.

FIGURE 26: GIB® RONDO® METAL CEILING BATTEN INSTALLATION

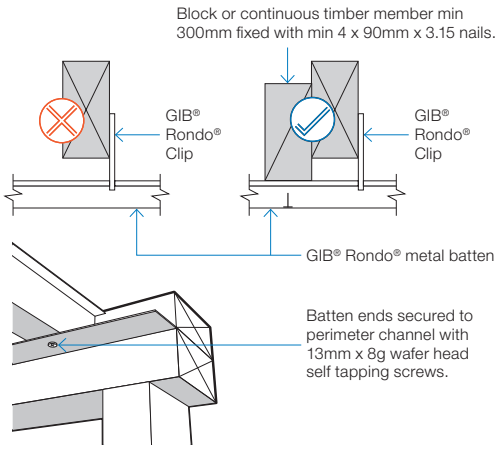

GEB016

FIGURE 27: GIB® RONDO® METAL CEILING BATTENS WITH CORNER ANGLES

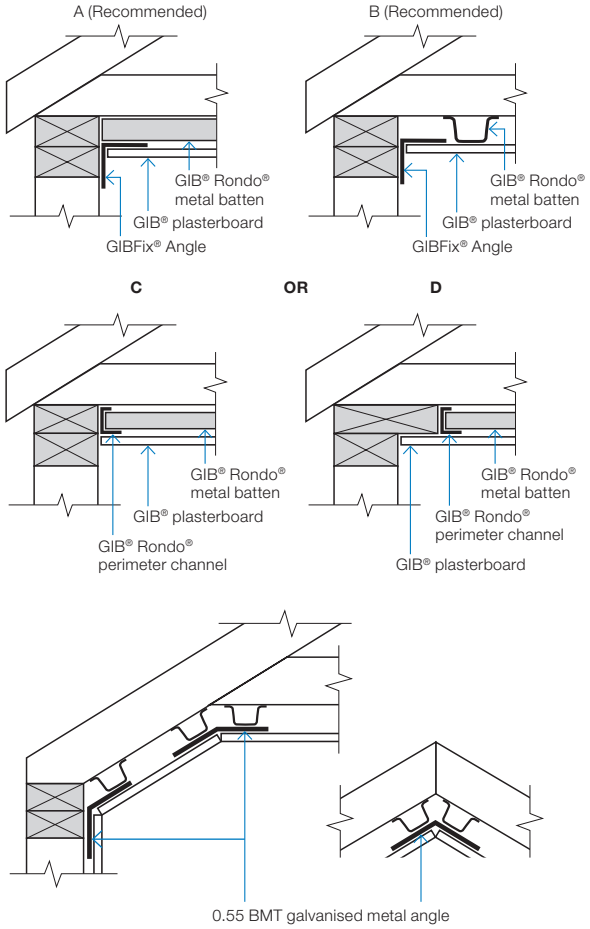

GEB017

FIGURE 28: TIMBER CEILING BATTENS*

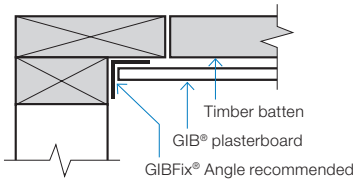

GEB018

RECEIVED 12/12/2022

Bcon22/0752 - WDC Approved Plans - 17/01/2023

Openings in ceiling diaphragms

SMALL OPENINGS

Small opening (e.g. down lights) of 90 x 90mm or less may be placed no closer than 90mm to the edge of the ceiling diaphragm.

LARGE OPENINGS

Openings are allowed withing the middle third of the diaphragms length and width. Fixing of sheet material to opening trimmers shall be at 150mm centres. Neither opening dimension shall exceed a third of the diaphragm width. Larger openings or openings in other locations require specific engineering design.

Where fireplace flue or range hood openings are required in a ceiling diaphragm use a galvansed metal backing plate as shown in figure 25, with a maximum hole diameter of 350mm.

Figure 25 can also be used for range hood openings in walls.

For information on openings in ceiling diaphragms contact the GIB® Helpline on 0800 100 442.

FIGURE 24: LARGE OPENINGS IN CEILING DIAPHRAGMS

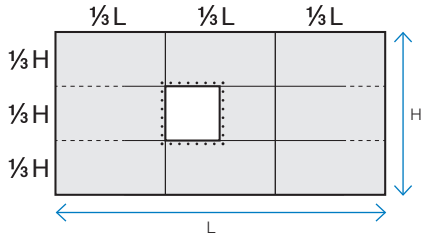

FIGURE 25: FIREPLACE FLUES AND RANGE HOOD OPENINGS

Section view

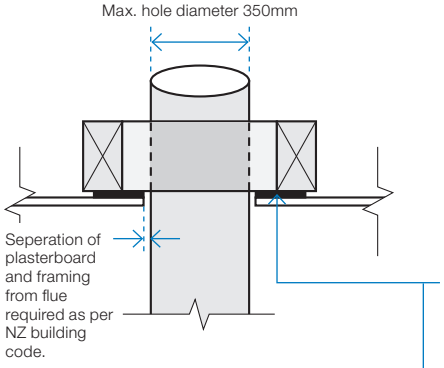

Plan view

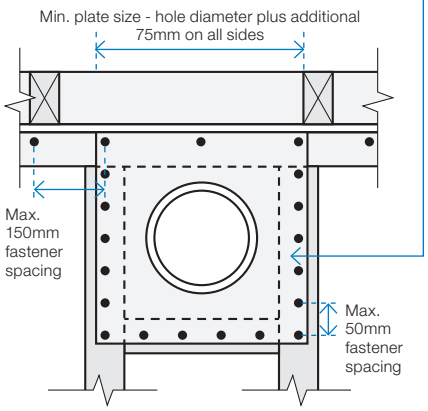

Steel plate
0.55 BMT Galvanised sheet Max. opening 350mm diameter. Installed prior to GIB® plasterboard.

Framing
90 x 45mm framing trimmed to provide extra fixing.

GIB® plasterboard ceiling
Installed over the steel plate and into framing using a minimum of 32mm x 6g GIB® Grabber High Thread or 32mm x 7g GIB® Grabber Dual Thread screws at 50mm max centre spacing.

Plasterboard ceiling not shown in plan view

RECEIVED 12/12/2022

Bcon22/0752 - WDC Approved Plans - 17/01/2023

Length of GIB EzyBrace® elements ('N' Type)

The length of GIB EzyBrace® elements with an 'N' extension (requiring standard NZS3604:2011 plate connections) can be taken as the full frame length measured from the outside of the end-stud to the opening face as illustrated in figures 29-32.

'N' type GIB EzyBrace® elements are identified by GIB® specification numbers GS1-N, GS2-N and GS2-NOM

The dimension 'L' shall not be less than 400mm.

Perimeter bracing fixing for linings of both 'H' and 'N' type elements is along the top and bottom plates, end stud, and doubling stud immediately adjacent to the opening.

Fastener spacings and diagram scales shown in Figures 29–32 are indicative only. Refer to p.23–30 for construction details.

FIGURE 29: GS BRACING ELEMENTS (OPTION A)

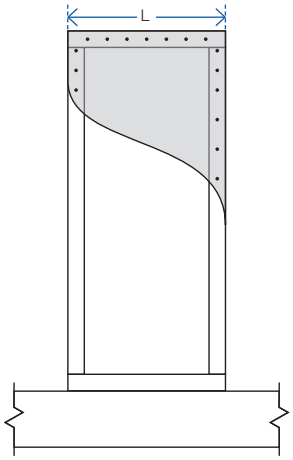

GS1-N, GS2-N elements
'L' indicates the length of the bracing element

FIGURE 30: GS BRACING ELEMENTS (OPTION B)

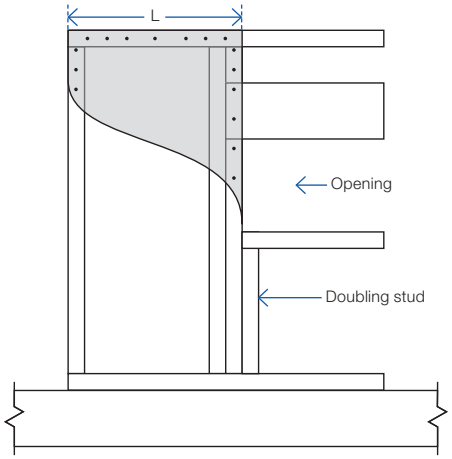

GS1-N, GS2-N elements
'L' indicates the length of the bracing element

FIGURE 31: GS BRACING ELEMENTS (OPTION C)

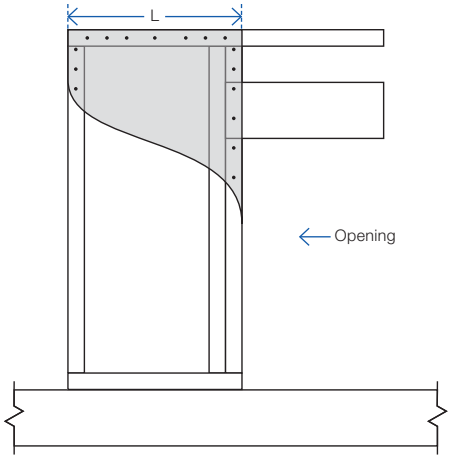

GS1-N, GS2-N elements
'L' indicates the length of the bracing element

FIGURE 32: GS BRACING ELEMENTS (OPTION D)

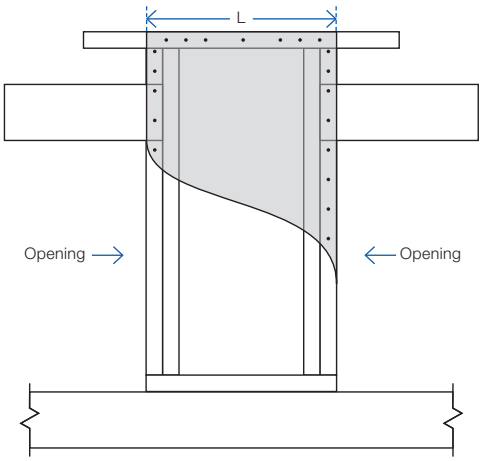

GS1-N, GS2-N elements
'L' indicates the length of the bracing element

RECEIVED 12/12/2022

Bcon22/0752 - WDC Approved Plans - 17/01/2023

Length of GIB EzyBrace® elements ('H' Type)

GIB EzyBrace® elements with an 'H' extension (requiring special panel hold-down fixings) can be used when the dimension 'L' as illustrated in figures 33–36 is 400mm or more.

'H' type GIB EzyBrace® elements are identified by GIB® specification numbers GSP-H, BL1-H, BLG-H and BLP-H.

The length of an 'H' type element is not only determined by the sheet material, but also by the placement of the hold-down fixings.

Hold-down fixings cannot be placed closer together than what is shown for the standard panel in figure 33.

Hold-down fixings can be placed under windows provided sill trimming studs beneath the opening are connected to the bracing element using 8/90mm gun nails, as illustrated in figure 34.

Spike doubling stud to trimming stud using a minimum of 2/90mm gun nails at 600mm centres. Lintel straps (where required for wind uplift) should be checked in and be located away from the bracing element fasteners.

Perimeter bracing fixing for linings of both 'H' and 'N' type elements is along the top and bottom plates, end stud, and doubling stud immediately adjacent to the opening as indicated in figures 34-36.

When using bracing straps, installed in accordance with p.17, fix the strap to the same framing member as shown for the GIB Handibrac® below, and install the adjacent anchor bolt in the same position as the GIB HandiBrac® bolt.

Fastener spacings and diagram scales shown in figures 33–36 are indicative only. Refer to p.23–30 for construction details.

FIGURE 33: BL BRACING ELEMENTS (OPTION A)

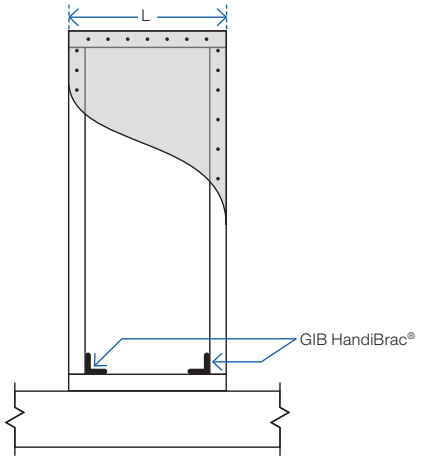

'H' type elements with specific hold downs
'L' indicates the length of the bracing element

FIGURE 34: BL BRACING ELEMENTS (OPTION B)

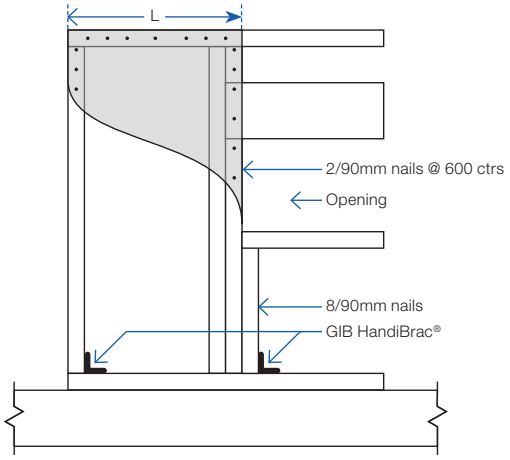

'H' type elements with specific hold downs
'L' indicates the length of the bracing element

FIGURE 35: BL BRACING ELEMENTS (OPTION C)

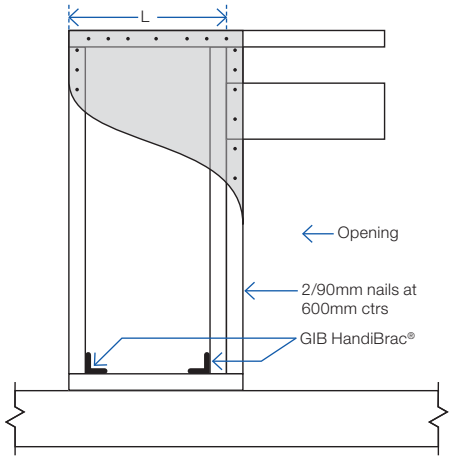

'H' type elements with specific hold downs
'L' indicates the length of the bracing element

FIGURE 36: BL BRACING ELEMENTS (OPTION D)

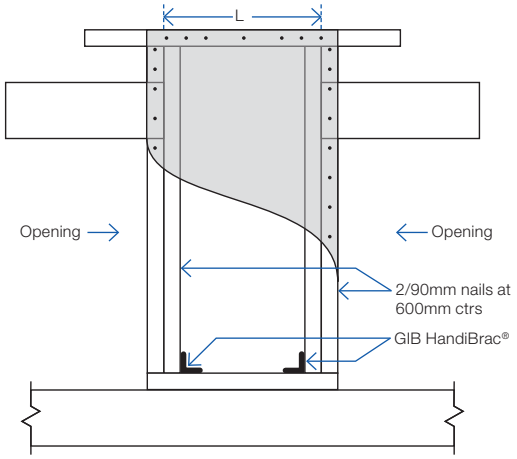

'H' type elements with specific hold downs
'L' indicates the length of the bracing element

RECEIVED 12/12/2022

Bcon22/0752 - WDC Approved Plans - 17/01/2023

GIB EzyBrace® Systems specification GS1-N

Specification code	Minimum length (m)	Lining requirement
GS1-N	0.4	Any 10mm or 13mm GIB® Standard plasterboard to one side only

WALL FRAMING

Wall framing to comply with;

- NZBC B1 — Structure B1/AS1 Clause 3 Timber (NZS 3604:2011).
- NZBC B2 — Durability B2/AS1 Clause 3.2 Timber (NZS 3602).

Framing dimensions and height as determined by NZS 3604:2011 stud and top plate tables for load bearing and non-bearing walls. The use of kiln dried stress graded timber is recommended.

BOTTOM PLATE FIXING

Timber floor

Pairs of hand driven 100 x 3.75mm nails at 600mm centres; or three power driven 90 x 3.15mm nails at 600mm centres.

Concrete floor

Internal Wall Bracing Lines: In accordance with the requirements of NZS 3604:2011 for internal wall plate fixing or 75 x 3.8mm shot fired fasteners with 16mm discs spaced at 150mm and 300mm from end studs and 600mm centres thereafter.

External Wall Bracing Lines: In accordance with the requirements of NZS 3604:2011 for external wall bottom plate fixing.

WALL LINING

- Any 10mm or 13mm GIB® plasterboard lining.
- Sheets can be fixed vertically or horizontally.
- Sheet joints shall be touch fitted.
- Use full length sheets where possible.

PERMITTED ALTERNATIVES

For permitted GIB® plasterboard alternatives refer to p. 5 in GIB EzyBrace® Systems literature.

FASTENING THE LINING

Fasteners

32mm x 6g GIB® Grabber® High Thread Screws, 32mm x 7g GIB® Grabber® Dual Thread Screws or 30mm GIB® Nails. If using the GIBFix® Angle use only 32mm x 7g GIB® Grabber® Dual Thread Screws.

Fastener centres

50,100,150, 225, 300mm maximum from each corner and 150mm thereafter around the perimeter of the bracing element. For vertically fixed sheets place fasteners at 300mm maximum centres to intermediate sheet joints. For horizontally fixed sheets place single fasteners to the sheet edge where it crosses the stud. Use daubs of GIBFix® adhesive at 300mm maximum centres to intermediate studs. Place fasteners no closer than 12mm from paper bound sheet edges and 18mm from any sheet end or cut edge.

JOINTING

Joint strength is important in delivering bracing system performance. All fastener heads stopped and all sheet joints GIB® Joint Tape reinforced and stopped in accordance with the GIB® Site Guide.

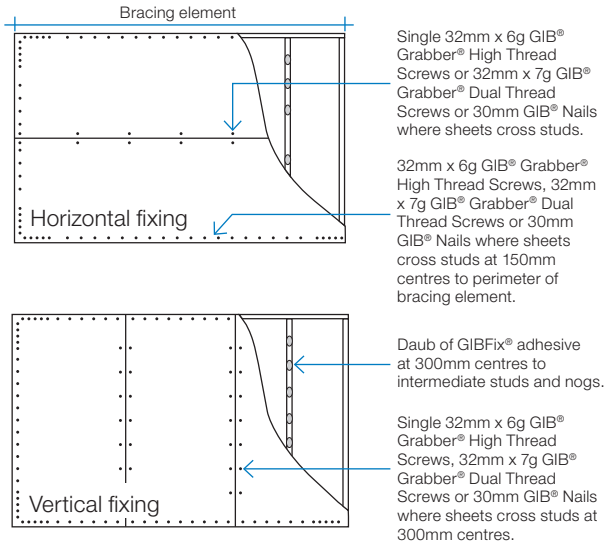

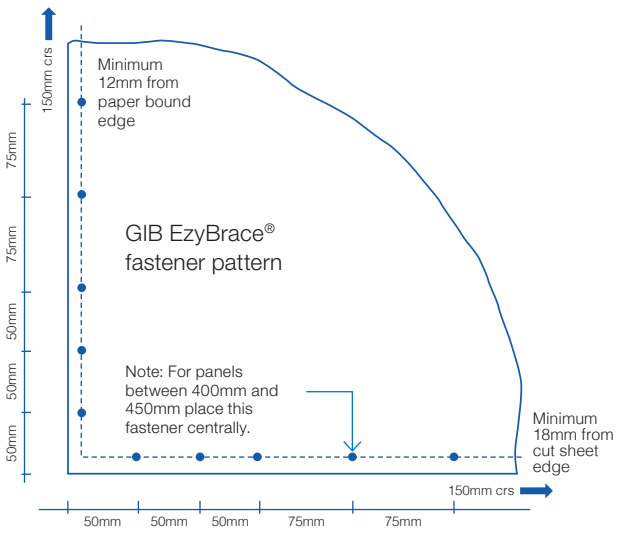

Unless stated all fastener spacings are maximums.

In order for GIB® systems to perform as tested, all components must be installed exactly as prescribed. Substituting components produces an entirely different system and may seriously compromise performance. Follow the specifications. This specification sheet is issued in conjunction with the publication GIB EzyBrace® Systems

RECEIVED 12/12/2022

Bcon22/0752 - WDC Approved Plans - 17/01/2023

GIB EzyBrace® Systems specification GS2-NOM

Specification code	Minimum length (m)	Lining requirement
GS2-NOM	0.4	Any 10mm or 13mm GIB® Standard plasterboard fixed to each side of the wall framing

WALL FRAMING

Wall framing to comply with;

- NZBC B1 — Structure B1/AS1 Clause 3 Timber (NZS 3604:2011).
- NZBC B2 — Durability B2/AS1 Clause 3.2 Timber (NZS 3602).

Framing dimensions and height as determined by NZS 3604:2011 stud and top plate tables for load bearing and non-bearing walls. The use of kiln dried stress graded timber is recommended.

BOTTOM PLATE FIXING

Timber floor

Pairs of hand driven 100mm x 3.75mm nails at 600mm centres; or three power driven 90mm x 3.15mm nails at 600mm centres.

Concrete floor

Internal Wall Bracing Lines: In accordance with the requirements of NZS 3604:2011 for internal wall plate fixing or 75mm x 3.8mm shot fired fasteners with 16mm discs spaced at 150mm and 300mm from end studs and then 600mm centres thereafter.

WALL LINING

- A layer of 10mm or 13mm GIB® plasterboard to each side of the wall.
- Sheets can be fixed vertically or horizontally.
- Sheet joints shall be touch fitted.
- Use full length sheets where possible.

PERMITTED ALTERNATIVES

For permitted GIB® plasterboard alternatives refer to p. 5 in GIB EzyBrace® Systems literature.

FASTENING THE LINING

Fasteners

32mm x 6g GIB® Grabber® High Thread Screws or 32mm x 7g GIB® Grabber® Dual Thread Screws. If using the GIBFix® Angle use 32mm x 7g GIB® Grabber® Dual Thread Screws.

Fastener centres

50, 300mm from each corner and 300mm maximum thereafter around the perimeter of the bracing element. For horizontally fixed sheets place single fasteners to the sheet edge where it crosses the stud. Use daubs of GIBFix® adhesive at 300mm maximum centres to intermediate studs. Place fasteners no closer than 12mm from paper bound sheet edges and 18mm from any sheet end or cut edge.

JOINTING

Joint strength is important in delivering bracing system performance. All fastener heads stopped and all sheet joints GIB® Joint Tape reinforced and stopped in accordance with the GIB® Site Guide.

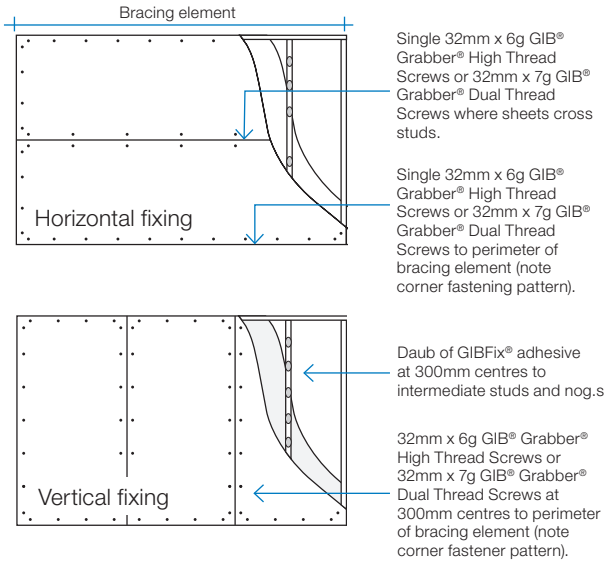

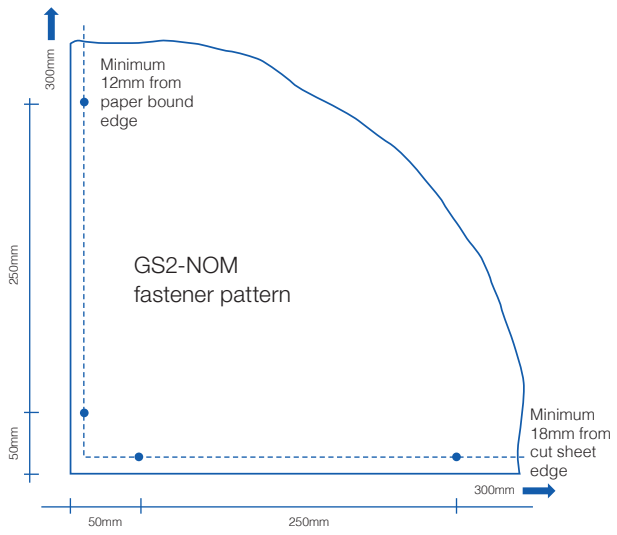

Unless stated all fastener spacings are maximums.

In order for GIB® systems to perform as tested, all components must be installed exactly as prescribed. Substituting components produces an entirely different system and may seriously compromise performance. Follow the specifications. This specification sheet is issued in conjunction with the publication GIB EzyBrace® Systems

RECEIVED 12/12/2022

Bcon22/0752 - WDC Approved Plans - 17/01/2023

GS2-NOM ADHESIVE FIXING OPTION AT DOOR JAMBS

As an alternative to using screw fixings, a continuous 6-10mm bead of solvent based GIBFix® All-Bond can be applied along the full height studs immediately adjacent to an internal door opening and at the door lintel or head trimmer. The lining is then bedded into the adhesive and installed into the rebated jamb, as shown in figure 38.

This solvent based adhesive option may only be used with GS2-NOM specification and is designed to reduce popping of fasteners around door openings on internal walls.

FIGURE 37: SCREW FIX FOR OPENINGS

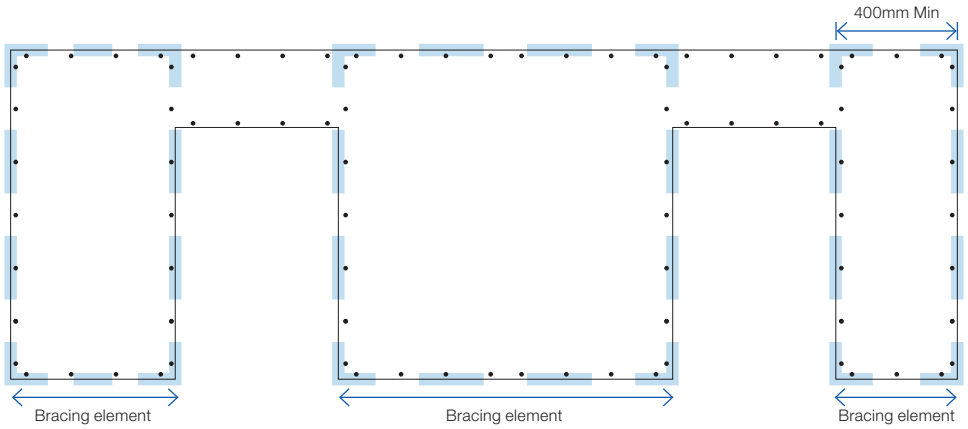

FIGURE 38: SCREW AND ADHESIVE FIX FOR OPENINGS

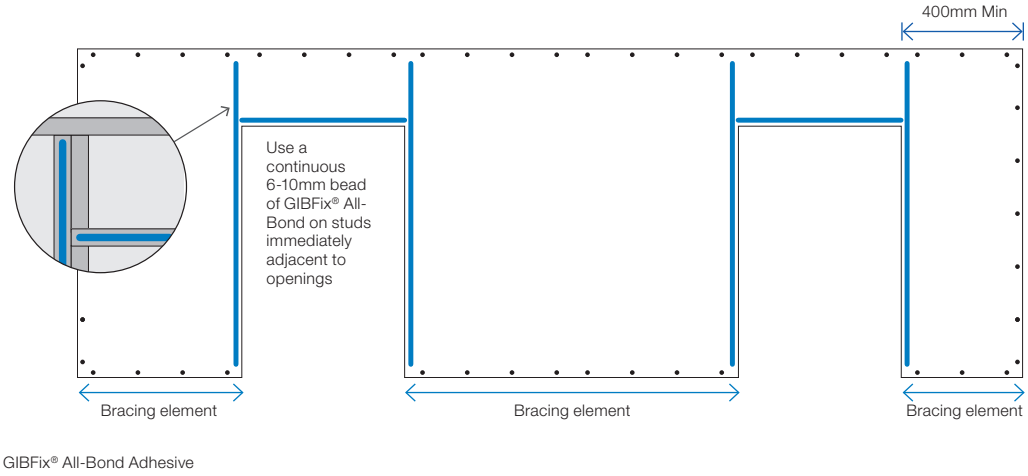

ADHESIVE NOZZLE APERTURE

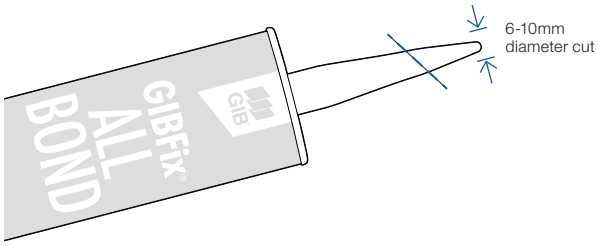

RECEIVED 12/12/2022

Bcon22/0752 - WDC Approved Plans - 17/01/2023

GIB EzyBrace® Systems specification GS2-N

Specification code	Minimum length (m)	Lining requirement
GS2-N	0.4	Any 10mm or 13mm GIB® Standard plasterboard fixed to each side of the wall framing

WALL FRAMING

Wall framing to comply with;

- NZBC B1 — Structure B1/AS1 Clause 3 Timber (NZS 3604:2011).
- NZBC B2 — Durability B2/AS1 Clause 3.2 Timber (NZS 3602).

Framing dimensions and height as determined by NZS 3604:2011 stud and top plate tables for load bearing and non-bearing walls. The use of kiln dried stress graded timber is recommended.

BOTTOM PLATE FIXING

Timber Floor

Pairs of hand driven 100 x 3.75mm nails at 600mm centres; or three power driven 90 x 3.15mm nails at 600mm centres.

Concrete floor

Internal Wall Bracing Lines: In accordance with the requirements of NZS 3604:2011 for internal wall plate fixing or 75 x 3.8mm shot fired fasteners with 16mm discs spaced at 150mm and 300mm from end studs and then 600mm centres thereafter.

WALL LINING

- A layer of 10mm or 13mm GIB® plasterboard to each side of the wall.
- Sheets can be fixed vertically or horizontally.
- Sheet joints shall be touch fitted.
- Use full length sheets where possible.

PERMITTED ALTERNATIVES

For permitted GIB® plasterboard alternatives refer to p. 5 in GIB EzyBrace® Systems literature.

FASTENING THE LINING

Fasteners

32mm x 6g GIB® Grabber® High Thread Screws,32mm x 7g GIB® Grabber® Dual Thread Screws or 30mm GIB® Nails. If using the GIBFix® Angle use only 32mm x 7g GIB® Grabber® Dual Thread Screws.

Fastener centres

50,100,150, 225, 300mm maximum from each corner and 150mm thereafter around the perimeter of the bracing element. For vertically fixed sheets place fasteners at 300mm maximum centres to intermediate sheet joints. For horizontally fixed sheets place single fasteners to the sheet edge where it crosses the stud. Use daubs of GIBFix® adhesive at 300mm maximum centres to intermediate studs. Place fasteners no closer than 12mm from paper bound sheet edges and 18mm from any sheet end or cut edge.

JOINTING

Joint strength is important in delivering bracing system performance. All fastener heads stopped and all sheet joints GIB® Joint Tape reinforced and stopped in accordance with the GIB® Site Guide.

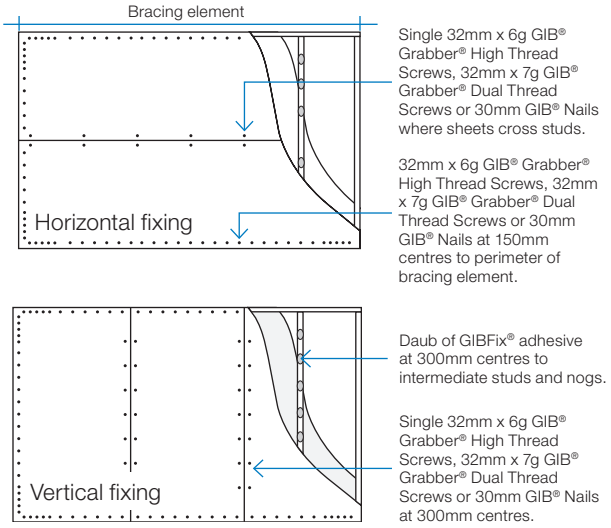

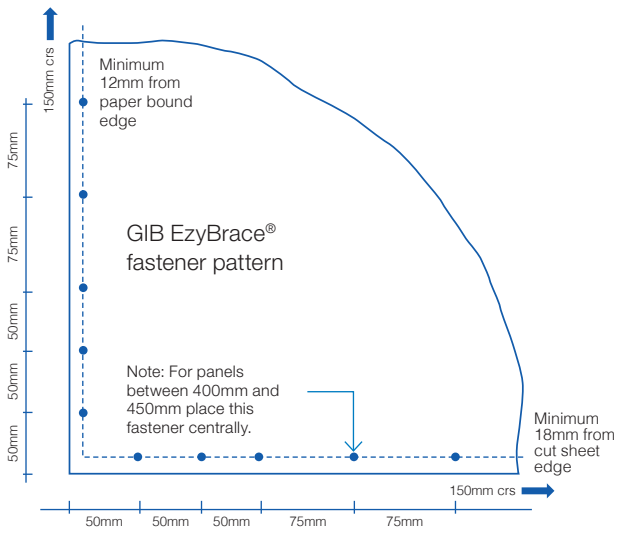

Unless stated all fastener spacings are maximums.

In order for GIB® systems to perform as tested, all components must be installed exactly as prescribed. Substituting components produces an entirely different system and may seriously compromise performance. Follow the specifications. This specification sheet is issued in conjunction with the publication GIB EzyBrace® Systems

RECEIVED 12/12/2022

Bcon22/0752 - WDC Approved Plans - 17/01/2023

GIB EzyBrace® Systems specification GSP-H

Specification Code	Minimum length (m)	Lining requirement	Other requirements
GSP-H	0.4	Any 10mm or 13mm GIB® plasterboard lining to one side of framing and minimum 7mm structural plywood manufactured to AS/NZ 2269.0 :2012 to the other side	Hold downs

WALL FRAMING

Wall framing to comply with;

- NZBC B1 — Structure B1/AS1 Clause 3 Timber (NZS 3604:2011).
- NZBC B2 — Durability B2/AS1 Clause 3.2 Timber (NZS 3602).

Framing dimensions and height as determined by NZS 3604:2011 stud and top plate tables for load bearing and non-bearing walls. The use of kiln dried stress graded timber is recommended.

BOTTOM PLATE FIXING

Timber floor

Use panel hold downs at each end of the bracing element. The GIB HandiBrac® is recommended. See details in GIB EzyBrace® Systems or GIB® Site Guide.

Pairs of hand driven 100 x 3.75mm nails at 600mm centres; or Three power driven 90 x 3.15mm nails at 600mm centres.

Concrete floor

Use panel hold downs at each end of the bracing element. The GIB HandiBrac® is recommended. See details in GIB EzyBrace® Systems or GIB® Site Guide. Within the length of the bracing element bottom plates are to be fixed in accordance with the requirements of NZS 3604:2011.

WALL LINING

- A layer of 10mm or 13mm GIB® plasterboard to one side of the wall plus minimum 7mm structural plywood manufactured to AS/NZ 2269.0 :2012 to the other side.
- Sheets can be fixed vertically or horizontally, with edges supported.
- Sheet joints shall be touch fitted.
- Use full length sheets where possible.

PERMITTED ALTERNATIVES

For permitted GIB® plasterboard alternatives refer to p. 5 in GIB EzyBrace® Systems literature.

FASTENING THE LINING

Fasteners

32mm x 6g GIB® Grabber® High Thread Screws, 32mm x 7g GIB® Grabber® Dual Thread Screws or 30mm GIB® Nails.

If using the GIBFix® Framing System or if fastening through GIBFix® Angles use only 32mm x 7g GIB® Grabber® Dual Thread Screws. Plywood: 50 x 2.8mm Galv or Stainless steel annular grooved FH nails.

Fastener centres

GIB® plasterboard side: 50,100,150, 225, 300mm maximum from each corner and 150mm thereafter around the perimeter of the bracing element. For vertically fixed sheets place fasteners at 300mm maximum centres to the intermediate sheet joints. For horizontally fixed sheets place single fasteners to the sheet edge where it crosses the stud. Use daubs of GIBFix® adhesive at 300mm maximum centres to intermediate studs. Place fasteners no closer than 12mm from paper bound sheet edges and 18mm from any sheet end or cut edge. Plywood side: 150mm centres to the perimeter of each sheet. GIB® corner fastener pattern does not apply to the plywood side. 300mm centres to intermediate studs.

JOINTING

Joint strength is important in delivering bracing system performance. All fastener heads stopped and all sheet joints GIB® Joint Tape reinforced and stopped in accordance with the GIB® Site Guide.

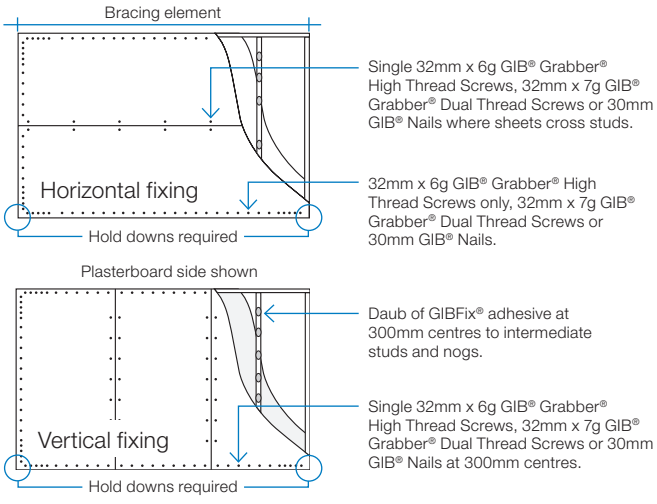

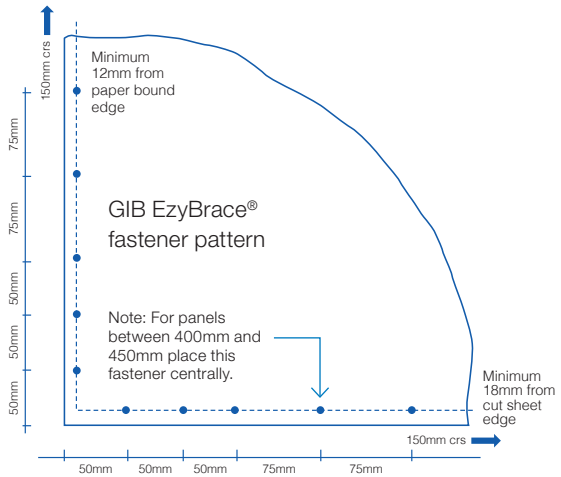

Unless stated all fastener spacings are maximums.

In order for GIB® systems to perform as tested, all components must be installed exactly as prescribed. Substituting components produces an entirely different system and may seriously compromise performance. Follow the specifications. This specification sheet is issued in conjunction with the publication GIB EzyBrace® Systems

RECEIVED 12/12/2022

Bcon22/0752 - WDC Approved Plans - 17/01/2023

GIB EzyBrace® Systems specification BL1-H

Specification code	Minimum length (m)	Lining requirement	Other requirements
BL1-H	0.4	10mm or 13mm GIB Braceline® to one side only	Hold downs

WALL FRAMING

Wall framing to comply with;

- NZBC B1 — Structure B1/AS1 Clause 3 Timber (NZS 3604:2011).
- NZBC B2 — Durability B2/AS1 Clause 3.2 Timber (NZS 3602).

Framing dimensions and height as determined by NZS 3604:2011 stud and top plate tables for load bearing and non-bearing walls. The use of kiln dried stress graded timber is recommended.

BOTTOM PLATE FIXING

Timber floor

Use panel hold downs at each end of the bracing element. The GIB HandiBrac® is recommended. See details in GIB EzyBrace® Systems or GIB® Site Guide.

Pairs of hand driven 100 x 3.75mm nails at 600mm centres; or Three power driven 90 x 3.15mm nails at 600mm centres.

Concrete floor

Use panel hold downs at each end of the bracing element. The GIB HandiBrac® is recommended. See details in GIB EzyBrace® Systems or GIB® Site Guide. Within the length of the bracing element bottom plates are to be fixed in accordance with the requirements of NZS 3604:2011.

WALL LINING

- A layer of 10mm or 13mm GIB Braceline®
- Sheets can be fixed vertically or horizontally.
- Sheet joints shall be touch fitted.
- Use full length sheets where possible.

PERMITTED ALTERNATIVES

For permitted GIB® plasterboard alternatives refer to p. 5 in GIB EzyBrace® Systems literature.

FASTENING THE LINING

Fasteners

32mm x 6g GIB® Grabber® High Thread Screws or 32mm x 7g GIB® Grabber® Dual Thread Screws. If using the GIBFix® Framing System or if fastening through GIBFix® Angles use only 32mm x 7g GIB® Grabber® Dual Thread Screws.

Fastener centres

50,100,150, 225, 300mm from maximum each corner and 150mm thereafter around the perimeter of the bracing element. For vertically fixed sheets place fasteners at 300mm maximum centres to the sheet joint. For horizontally fixed sheets place single fasteners to the sheet edge where it crosses the stud. Use daubs of GIBFix® adhesive at 300mm maximum centres to intermediate studs. Place fasteners no closer than 12mm from paper bound sheet edges and 18mm from any sheet end or cut edge.

JOINTING

Joint strength is important in delivering bracing system performance. All fastener heads stopped and all sheet joints GIB® Joint Tape reinforced and stopped in accordance with the GIB® Site Guide.

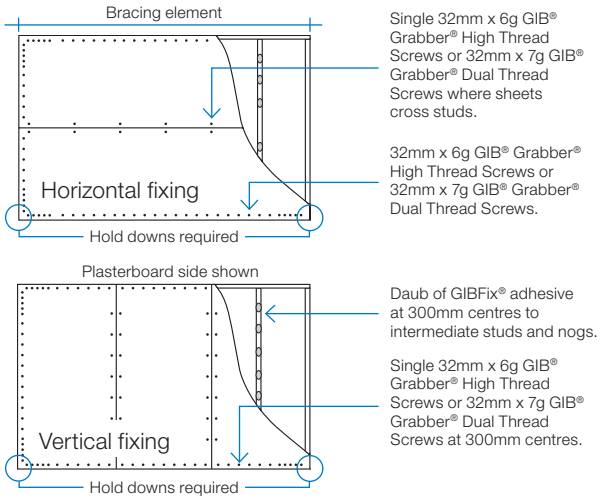

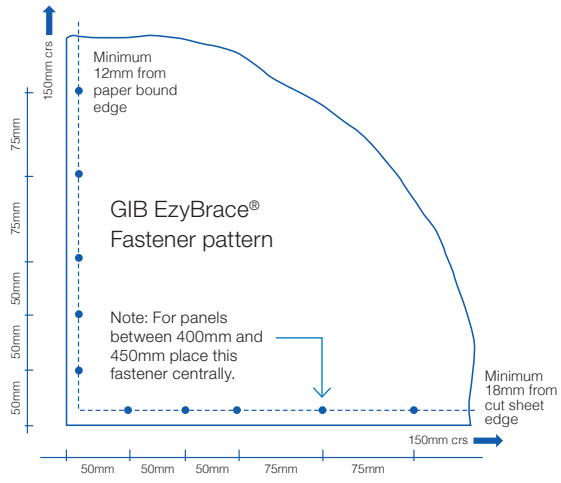

Unless stated all fastener spacings are maximums.

In order for GIB® systems to perform as tested, all components must be installed exactly as prescribed. Substituting components produces an entirely different system and may seriously compromise performance. Follow the specifications. This specification sheet is issued in conjunction with the publication GIB EzyBrace® Systems

RECEIVED 12/12/2022

Bcon22/0752 - WDC Approved Plans - 17/01/2023

GIB EzyBrace® Systems specification BLG-H

Specification code	Minimum length (m)	Lining requirement	Other requirements
BLG-H	0.4	10mm or 13mm GIB Braceline® to one side of the frame plus any 10mm or 13mm GIB® plasterboard to the other side	Hold downs

WALL FRAMING

Wall framing to comply with;

- NZBC B1 — Structure B1/AS1 Clause 3 Timber (NZS 3604:2011).
- NZBC B2 — Durability B2/AS1 Clause 3.2 Timber (NZS 3602).

Framing dimensions and height as determined by NZS 3604:2011 stud and top plate tables for load bearing and non-bearing walls. The use of kiln dried stress graded timber is recommended.

BOTTOM PLATE FIXING

Timber floor

Use panel hold downs at each end of the bracing element. The GIB HandiBrac® is recommended. See details in GIB EzyBrace® Systems or GIB® Site Guide. Pairs of hand driven 100 x 3.75mm nails at 600mm centres; or Three power driven 90 x 3.15mm nails at 600mm centres.

Concrete floor

Use panel hold downs at each end of the bracing element. The GIB HandiBrac® is recommended. See details in GIB EzyBrace® Systems 2011 or GIB® Site Guide. Within the length of the bracing element bottom plates are to be fixed in accordance with the requirements of NZS 3604:2011.

WALL LINING

- A layer of 10mm or 13mm GIB Braceline® to one side of the wall plus any 10mm or 13mm GIB® plasterboard lining to the other side.
- Sheets can be fixed vertically or horizontally.
- Sheet joints shall be touch fitted.
- Use full length sheets where possible.

PERMITTED ALTERNATIVES

For permitted GIB® plasterboard alternatives refer to p. 5 in GIB EzyBrace® Systems literature.

FASTENING THE LINING

Fasteners

GIB Braceline® side: 32mm x 6g GIB® Grabber® High Thread Screws or 32mm x 7g GIB® Grabber® Dual Thread Screws.Other side: 32mm x 6g GIB® Grabber® High Thread Screws, 30mm GIB Nails or 32mm x 7g GIB® Grabber® Dual Thread Screws.

If using the GIBFix® Framing System or if fastening through GIBFix® Angles use only 32mm x 7g GIB® Grabber® Dual Thread Screws.

Fastener centres

50,100,150, 225, 300mm maximum from each corner and then 150mm thereafter around the perimeter of the bracing element. For vertically fixed sheets place fasteners at 300mm maximum centres to the intermediate sheet joints. For horizontally fixed sheets place single fasteners to the sheet edge where it crosses the stud. Use daubs of GIBFix® adhesive at 300mm maximum centres to intermediate studs. Place fasteners no closer than 12mm from paper bound sheet edges and 18mm from any sheet end or cut edge.

JOINTING

Joint strength is important in delivering bracing system performance. All fastener heads stopped and all sheet joints GIB® Joint Tape reinforced and stopped in accordance with the GIB® Site Guide.

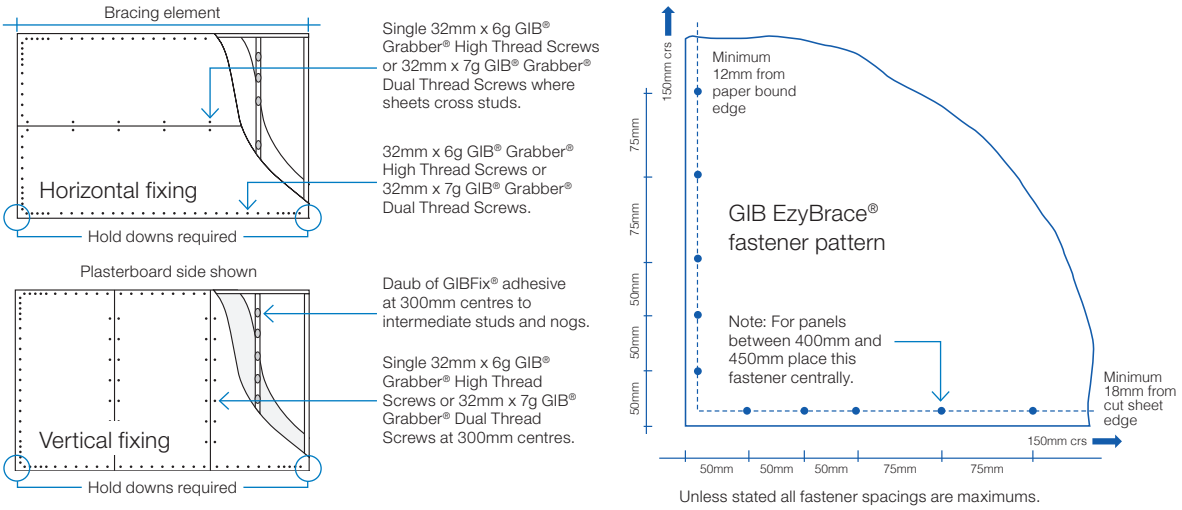

Unless stated all fastener spacings are maximums.

In order for GIB® systems to perform as tested, all components must be installed exactly as prescribed. Substituting components produces an entirely different system and may seriously compromise performance. Follow the specifications. This specification sheet is issued in conjunction with the publication GIB EzyBrace® Systems

RECEIVED 12/12/2022

Bcon22/0752 - WDC Approved Plans - 17/01/2023

GIB EzyBrace® Systems specification BLP-H

Specification code	Minimum length (m)	Lining requirement	Other requirements
BLP-H	0.4	10mm or 13mm GIB Braceline® to one side of the frame plus minimum 7mm structural plywood manufactured to AS/NZ 2269.0 :2012 to the other side	Hold downs

WALL FRAMING

Wall framing to comply with;

- NZBC B1 — Structure; B1/AS1 Clause 3 Timber (NZS 3604:2011).
- NZBC B2 — Durability B2/AS1 Clause 3.2 Timber (NZS 3602).

Framing dimensions and height as determined by NZS 3604:2011 stud and top plate tables for load bearing and non-bearing walls. The use of kiln dried stress graded timber is recommended.

BOTTOM PLATE FIXING

Timber floor

Use panel hold downs at each end of the bracing element. The GIB® HandiBrac is recommended. See details in GIB EzyBrace® Systems or GIB® Site Guide.

Pairs of hand driven 100 x 3.75mm nails at 600mm centres; or Three power driven 90 x 3.15mm nails at 600mm centres.

Concrete floor

Use panel hold downs at each end of the bracing element. The GIB HandiBrac® is recommended. See details in GIB EzyBrace® Systems or GIB® Site Guide. Within the length of the bracing element bottom plates are to be fixed in accordance with the requirements of AS/NZ 2269/0 :2012.

WALL LINING

- A layer of 10mm or 13mm GIB Braceline® to one side of the wall plus minimum 7mm structural plywood manufactured to AS/NZS 2269.0 :2012 to the other side.
- Sheets can be fixed vertically or horizontally.
- Plywood is to be fixed vertically with edges supported.
- Sheet joints shall be touch fitted.
- Use full length sheets where possible.

PERMITTED ALTERNATIVES

For permitted GIB® plasterboard alternatives refer to p. 5 in GIB EzyBrace® Systems literature.

FASTENING THE LINING

Fasteners

GIB Braceline® side: 32mm x 6g GIB® Grabber® High Thread Screws or 32mm x 7g GIB® Grabber® Dual Thread Screws. Plywood: 50 x 2.8mm Galv or Stainless steel annular grooved FH nails. If using the GIBFix® Framing System or if fastening through GIBFix® Angles use only 32mm x 7g GIB® Grabber® Dual Thread Screws.

Fastener centres

GIB® Plasterboard side: 50,100,150, 225, 300mm from each corner and then 150mm thereafter around the perimeter of the bracing element. For vertically fixed sheets place fasteners at 300mm centres to the intermediate sheet joints. For horizontally fixed sheets place single fasteners to the sheet edge where it crosses the stud. Use daubs of GIBFix® adhesive at 300mm centres to intermediate studs. Place fasteners no closer than 12mm from paper bound sheet edges and 18mm from any sheet end or cut edge. Plywood side: 150mm centres to the perimeter of each sheet. GIB® corner fastener pattern does not apply to the plywood side. 300mm centres to intermediate studs.

JOINTING

Joint strength is important in delivering bracing system performance. All fastener heads stopped and all sheet joints GIB® Joint Tape reinforced and stopped in accordance with the GIB® Site Guide.

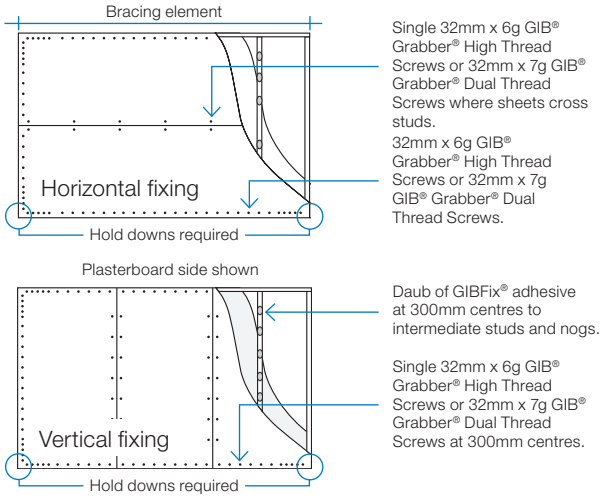

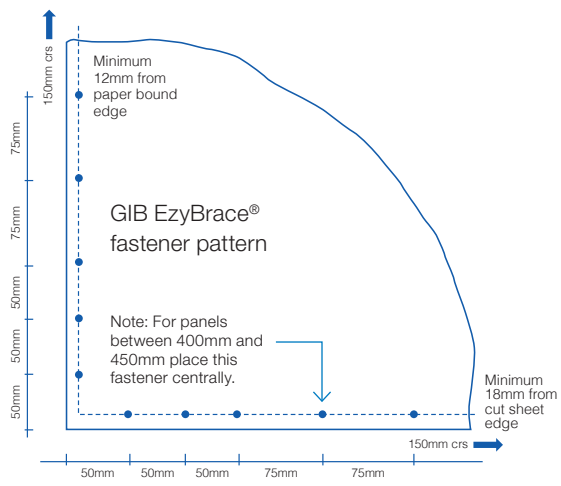

Unless stated all fastener spacings are maximums.

In order for GIB® systems to perform as tested, all components must be installed exactly as prescribed. Substituting components produces an entirely different system and may seriously compromise performance. Follow the specifications. This specification sheet is issued in conjunction with the publication GIB EzyBrace® Systems

RECEIVED 12/12/2022

Bcon22/0752 - WDC Approved Plans - 17/01/2023

Winstone Wallboards is committed to protecting the environment. Environmental matters are integrated into all business activities:

- Our operations strive to exceed all environmental regulatory requirements at all times.
- Protection of the environment is a day to day responsibility that we all must accept.
- We allocate appropriate management time and resources to address relevant environmental issues and continuously improve our activities in that area.
- We will achieve our standards of performance through positive action, employee involvement and constant communication with our neighbours, local authorities and customers.

Minimise on-site waste when designing and/or installing GIB® Systems. For larger projects give consideration to our cut-to-length service to reduce waste. GIB® plasterboard off-cuts, if separated from other waste building materials, can be readily recycled.

For larger projects waste can be diverted to compost manufacturers who grind up the GIB® plasterboard and use it in compost. For smaller projects, the GIB® plasterboard can be ground up and spread around the building site.

GLOBAL GREENTAG^{CERTTM}

The Global GreenTag^{CertTM} certified eco-label acknowledges product as meeting the GreenRate Standard set by Global GreenTag.^{CertTM}

GIB® plasterboard has a Level B green rating.

DECLARE CERTIFICATION

Declare is a database of non-toxic, sustainably sourced building products.

Many GIB® plasterboard products including GIB® Standard, GIB Braceline®, GIB Noiseline® and GIB Aqualine® have achieved Red List Free status in Declare certification.

For more information on Winstone Wallboards sustainability commitments visit gib.co.nz.

COPYRIGHT

Copyright © Winstone Wallboards Ltd 2016. All of the material contained in this brochure, including all text, tables, charts, graphs, drawings, images, diagrams are protected by copyright. These materials may not be reproduced, adapted or transmitted in any form by any process, without the permission of Winstone Wallboards Ltd.

Winstone Wallboards asserts its moral rights and reserves all other intellectual property rights in the materials contained in this brochure and related to GIBFix® Framing System and GIB EzyBrace® Systems.

TRADEMARKS

The names GIB®, GIB Fyreline®, GIB Ultraline®, GIB Braceline®, GIB Toughline®, GIB Noiseline®, GIB Aqualine®, GIB Nail®, GIB Tradeset®, GIB Plus 4®, GIB-Cove®, GIB Lite Blue®, GIBFix®, the colour mauve for GIB Toughline®, GIB HandiBrac®, GIB EzyBrace®, the colour blue for GIB Braceline®, the colour pink for GIB Fyreline®, the colour green for GIB Aqualine®, and the shield device are registered trademarks of Fletcher Building Holdings Limited.

PATENTS

GIBFix® Framing System and GIB EzyBrace® Systems, including componentry and design method, have patents pending (NZ Patent Number 596691, NZ Patent 709159 pending) and design and other IP rights.

RECEIVED 12/12/2022

Bcon22/0752 - WDC Approved Plans - 17/01/2023

RECEIVED 12/12/2022

FOR MORE INFORMATION VISIT

gib.co.nz

OR CALL THE GIB® HELPLINE

0800 100 442

Bcon22/0752 - WDC Approved Plans - 17/01/2023

Thermakraft™

WATERGATE PLUS 295

RECEIVED 12/12/2022



SYNTHETIC WALL UNDERLAY

The ultimate wrap, all walls, all systems

Watergate Plus 295 is a fire retardant, absorbent, breathable wall underlay. It is a white composite Non-woven polypropylene, specifically designed as a wall underlay behind exterior wall cladding. Watergate Plus 295 also offers a high degree of water resistance, with a high level of water vapour permeability.

ADVANTAGES

- Can be used as a wall underlay on timber and steel framed buildings with absorbent and non-absorbent wall cladding direct fixed to framing.
- Can be used as a wall underlay on timber and steel framed buildings with absorbent and non-absorbent wall cladding installed over an 18mm minimum drained cavity.
- Is suitable for use in all Wind Zones of NZS 3604 up to, and including, "Very High", when used as standalone flexible underlay, and Extra High when used as a flexible underlay over a rigid wall underlay.
- Will provide temporary weather protection during construction. (Max 60 Days).
- Can be used as a non-rigid backing material for Stucco Plaster.*
- May be used as a slip layer over rigid backing for Stucco Plaster.*
- Is fire retardant.*
- Unaffected by LOSP treated timber.
- Is suitable as an air barrier in unlined walls.

CodeMark BRANZ-CM-1002

FIRE RETARDANT

WALL
This is a Thermakraft wall product

* Refer technical specifications

BRANZ Appraised
Appraisal No.695 [2017]

For additional details and latest specifications www.thermakraft.co.nz or scan QR code.

Bcon22/0752 - WDC Approved Plans - 17/01/2023

Thermakraft Watergate Plus 295 – Technical Specification

Fire Retardant | Breathable | Absorbent | Non Woven | Wall Underlay

Thermakraft Watergate Plus 295 can be used as a wall underlay on timber and steel framed buildings within the following scope:

- The scope limitations of NZBC Acceptable Solution E2/AS1, Paragraph 1.1, with regards to building height and floor plan area; and,
- With absorbent wall claddings directly fixed to timber and steel framing; and,
- With non-absorbent wall claddings directly fixed to timber and steel framing; and,
- With absorbent and non-absorbent wall claddings installed over an 18mm minimum drained cavity;
- With masonry veneer in accordance with NZS 3604, NZBC Acceptable Solution E2/AS1 for timber framed buildings, or specific engineering design for steel framed buildings; and,
- Situated in NZS3604 Building Wind Zones up to, and including 'Very High' when used as a standalone flexible underlay, and "Extra High" when used as a flexible underlay over a rigid wall underlay.
- Can be used as a non-rigid backing material for Stucco Plaster in accordance with the requirements of NZBC Acceptable Solution E2/AS1 Paragraph 9.3.5.1. The Underlay must be supported with 75mm galvanized mesh, or Thermakraft Stud Strap at 150mm centres run across cavity battens to limit deflection to a maximum of 5mm.
- May also be used as a slip layer over rigid backing for Stucco Plaster in accordance with the requirements of NZBC E2/AS1 Paragraph 9.3.3(b).
- Refer BRANZ Appraisal No 695 (2017) for full details.
- May be used with LOSP treated timber.
- Is suitable as an air barrier in unlined wall spaces.
- Is suitable to be used in conjunction with thermal breaks on steel framed buildings.
- Is suitable for direct fixing behind metal cladding.

Flammability Index

Thermakraft Watergate Plus 295 Wall Underlay has an AS 1530 Part 2 Flammability Index of not greater than 5 and therefore meets the requirements of NZBC Acceptable Solutions C/AS2 to C/AS6, Paragraph 4.17.8 b), for the surface finish requirements of suspended flexible fabric used as an underlay to exterior cladding that is exposed to view in occupied spaces. It may therefore be used with no restrictions in all buildings.

Limitations

- Must not be used as a roof underlay.

Durability

Meets the Performance Requirements of NZBC Clauses B2, Durability (B2.3.1 (a) 50 years, B2.3.1 (b) 15 years and B2.3.2), E2 External Moisture (E2.3.2), and F2 Hazardous Building Materials F2.3.1, providing

- It is not damaged.
- Installed in accordance with instruction guide.
- Is not left exposed for more than 60 days.
- Installed by or under guidance of Licensed Building Practitioners.
- Is compatible with cladding system used.

Table 1: NZBC E2/AS1 wall underlay requirements

NZBC E2/AS1 TABLE 23 (NZS2295) WALL UNDERLAY PROPERTIES	PROPERTY PERFORMANCE REQUIREMENTS	PROPERTY PERFORMANCE
Absorbency	≥ 100gsm	Pass
Vapour Resistance	≤ 7 MN.s/g	Pass
pH of Extract	≥ 5.5 and ≤ 8	Pass
Shrinkage	≤ 0.5%	Pass
Water Resistance	≥ 20mm	Pass
Air Resistance	≥ 0.1 MN.s/m^3	295 can be used as an air barrier

Roll Dimensions

WIDTH (MM)	LENGTH (M)	M^2
1370	18.5	25
1370	37.0	50
1370	73.0	100
2740	18.5	50
2740	36.5	100

*M^2 is the roll size for actual coverage, allow for laps and joins.

For additional details and latest specifications www.thermakraft.co.nz

Customer Service 0800 806 595

BRANZ Appraised
Appraisal No.695 [2017]

Thermakraft™ THERE IS NO SUBSTITUTE

Thermakraft Ltd 11 Turin Place, East Tamaki, Auckland, New Zealand
P.O.Box 58-112, Botany, Auckland 2163 **Phone** 0800 806 595 or +64 9 273 3727
Fax +64 9 273 3726 **Email** info@thermakraft.co.nz **www.thermakraft.co.nz**

The recommendations contained in Thermakraft's literature are based on good building practice, but are not an exhaustive statement of all relevant information and are subject to any conditions contained in the Warranty. All product dimensions and performance claims are subject to any variation caused by normal manufacturing process and tolerances. Furthermore, as the successful performance of the relevant system depends on numerous factors outside the control of Thermakraft (for example quality of workmanship and design), Thermakraft shall not be liable for the recommendations in that literature and the performance of the Product, including its suitability for any purpose or ability to satisfy the relevant provisions of the Building Code, regulations and standards. Literature subject to change without notification. Latest documentation can be found on the website.

E.&O.E.

Issue 6, March 19

RECEIVED 12/12/2022

Bcon22/0752 - WDC Approved Plans - 17/01/2023

Thermakraft™

THERMAKRAFT215

Thermakraft 215 self-supporting roof and wall underlay is an absorbent, breathable underlay specifically designed for use in Domestic and Commercial buildings. Suitable as a roof and wall underlay with all cladding types, where Fire Retardancy is NOT required.

- ✓ Versatile building Underlay, designed for use in residential and commercial roof and wall applications.
- ✓ Reduces wind entry into wall and roof cavities, improving thermal efficiency of bulk insulation. Can be used as a vapour control layer, and improve thermal performance if installed and taped on the warm side of bulk insulation.
- ✓ High water resistance provides for temporary weather protection prior to installation of cladding, and acts as a secondary layer of water protection during its serviceable life.
- ✓ Highly water vapour permeable, allowing excess water vapour that may otherwise condense in the wall structure to escape.
- ✓ Lap line printed.

Self-Supporting

High Water Barrier

Breathable

Absorbent

THERMAKRAFT 215

ROOF

WALL



ROOF AND WALL UNDERLAY

RECEIVED 12/12/2022

TECHNICAL SPECIFICATIONS

NZBC E2/AS1 ROOF UNDERLAY REQUIREMENTS		
NZBC E2/AS1 TABLE 23 ROOF UNDERLAY PROPERTIES	**PROPERTY PERFORMANCE REQUIREMENTS**	**PROPERTY PERFORMANCE**
Absorbency	≥ 150gsm	Pass
Vapour Resistance	≤ 7 MN.s/g	Pass
pH of Extract	≥ 5.5 and ≤ 8	Pass
Shrinkage	≤ 0.5%	Pass
Water Resistance	≥ 100mm	Pass
NZS2295:2206 CLASSIFICATION		
Flammability Index		Non Fire Retardant
Wind Zone	R2	Up to Very High
NZS2295:2006	R2	Self Support

NOTE:
For wall cavity systems, NZBC Acceptable Solution E2/AS1 Paragraph 9.1.5.5 requires where stud spacing's are greater than 450mm centres, an intermediate means of restraining the building underlay and insulation from bulging into the drained cavity shall be installed. An acceptable means of achieving this is by fixing with Thermakraft Stud Strap horizontally at 300mm centres.

Flammability Index
Thermakraft 215 is not fire retardant.

Roll Dimensions:
1250mm x 20m (25m2)
1250mm x 40m (50m2)
M2 is the roll size for actual coverage, allow for laps and joins.

Thermakraft 215 complies with the requirements of NZBC E2/AS1 Table 23. Is suitable for use in the following:

- With absorbent wall claddings directly fixed to timber and steel framing; and,
- With non-absorbent wall claddings directly fixed to timber and steel framing; and,
- With absorbent and non-absorbent wall claddings installed over an 18mm minimum drained cavity; and,
- With masonry veneer in accordance with NZS 3604; and,
- Situated in NZS3604 Building Wind Zones up to, and including 'Very High' (wall); and,
- As a ROOF underlay Self-supporting when run horizontally at pitches 3° and greater. When run vertically at pitches >3° and <10° degrees, 215 must be supported. Support recommended at very low pitches; and,
- As a roof underlay suitable for use with all Roofing materials; and
- Is suitable as an air barrier in unlined wall spaces.

RECEIVED 12/12/2022

DURABILITY

For Thermakraft 215 to meet the Performance Requirements of NZBC Clause B2, Durability B2.3.1 (a) 50 years and B2.3.1 (b) 15 years, E2 External Moisture providing:

- Installed in accordance to the Application and Installation Guidelines.
- Run length no greater than 10 meters.
- Is not left exposed for more than (7 days) roof.
- Is not left exposed for more than (28 days) wall.
- When used with LOSP treated timber, inspection must be carried out to ensure that the solvent in the LOSP treated timber has sufficient time to dry out (typically 7 days after the treatment process under the suitable environment conditions).
- Installed by or under guidance of Licensed Building Practitioners.
- Installed in accordance with the Roofing Code of Practice.

For additional details and latest specifications www.thermakraft.co.nz **Customer Service 0800 806 595**

Thermakraft™ THERE IS NO SUBSTITUTE

Thermakraft Ltd 11 Turin Place, East Tamaki, Auckland, New Zealand
P.O.Box 58-112, Botany, Auckland 2163 **Phone** 0800 806 595 or +64 9 273 3727
Fax +64 9 273 3726 **Email** info@thermakraft.co.nz **www.thermakraft.co.nz**

The recommendations contained in Thermakraft's literature are based on good building practice, but are not an exhaustive statement of all relevant information and are subject to any conditions contained in the Warranty. All product dimensions and performance claims are subject to any variation caused by normal manufacturing process and tolerances. Furthermore, as the successful performance of the relevant system depends on numerous factors outside the control of Thermakraft (for example quality of workmanship and design), Thermakraft shall not be liable for the recommendations in that literature and the performance of the Product, including its suitability for any purpose or ability to satisfy the relevant provisions of the Building Code, regulations and standards. Literature subject to change without notification. Latest documentation can be found on the website.

Bcon22/0752 - WDC Approved Plans - 17/01/2023

BRANZ Appraised

Appraisal No. 484 [2018]

MAPEGUM WPS, MAPELASTIC, MAPELASTIC SMART, MAPELASTIC TURBO AND MAPELASTIC AQUADEFENSE WET AREA MEMBRANES



Appraisal No. 484 (2018)

This Appraisal replaces BRANZ Appraisal No. 484 (2012)

Amended 25 February 2021

BRANZ Appraisals

Technical Assessments of products for building and construction.

MAPEI
EXCLUSIVELY DISTRIBUTED BY MBP (NZ) LTD.

MBP (NZ) Ltd.

Exclusive distributor of Mapei products in NZ
P.O. Box 12 326
Penrose Auckland
Tel: 09 921 1994
Fax: 09 921 1993
Web: www.MBPLtd.co.nz

BRANZ

BRANZ
1222 Moonshine Rd,
RD1, Porirua 5381
Private Bag 50 908
Porirua 5240,
New Zealand
Tel: 04 237 1170
branz.co.nz

Product

1.1 Mapegum WPS and Mapelastic AquaDefense are one component, liquid-applied waterproofing membranes for internal applications under ceramic or stone tile finishes.

1.2 Mapelastic, Mapelastic Smart and Mapelastic Turbo are two-component liquid applied waterproofing membranes suitable for internal applications on substrates under ceramic or stone tile finishes.

Scope

2.1 Mapegum WPS, Mapelastic, Mapelastic Smart, Mapelastic Turbo and Mapelastic AquaDefense Wet Area Membranes have been appraised for use as waterproofing membranes for the internal wet areas of buildings, within the following scope:

- on floor substrates of concrete, flooring grade particle board, plywood, compressed fibre cement sheet and fibre cement sheet tile underlay, and on wall substrates of concrete, concrete masonry, wet area fibre cement sheet lining systems and wet area plasterboard lining systems; and,
- when protected from physical damage by ceramic or stone tile finishes; and,
- where floors are designed and constructed such that deflections do not exceed 1/360th of the span.

2.2 The use of Mapegum WPS, Mapelastic, Mapelastic Smart, Mapelastic Turbo and Mapelastic AquaDefense Wet Area Membranes on concrete slabs where hydrostatic or vapour pressure is present is outside the scope of this Appraisal.

2.3 Movement and control joints in the substrate must be carried through the membrane and tile finish. The design and construction of the substrate and movement and control joints is specific to each building, and is therefore the responsibility of the building designer and building contractor and is outside the scope of this Appraisal.

2.4 The ceramic or stone tile finishes are outside the scope of this Appraisal.

2.5 The membranes must be installed by trained applicators, approved by MBP (NZ) Ltd, to the conditions of the Technical Data Sheet (TDS) of the products.

RECEIVED 12/12/2022

Readers are advised to check the validity of this Appraisal by referring to the Valid Appraisals listing on the BRANZ website, or by contacting BRANZ.

Bcon22/0752 - WDC Approved Plans - 17/01/2023

Building Regulations

New Zealand Building Code (NZBC)

3.1 **In the opinion of BRANZ, Mapegum WPS, Mapelastic, Mapelastic Smart, Mapelastic Turbo and Mapelastic AquaDefense Wet Area Membranes if designed, used, installed and maintained in accordance with the statements and conditions of this Appraisal, will meet the following provisions of the NZBC:**

Clause B2 DURABILITY: Performance B2.3.1 (b) 15 years and B2.3.2. Mapegum WPS, Mapelastic, Mapelastic Smart, Mapelastic Turbo and Mapelastic AquaDefense Wet Area Membranes meet these requirements. See Paragraph 9.1.

Clause E3 INTERNAL MOISTURE: Performance E3.3.6. Interior wet area floors and walls incorporating Mapegum WPS, Mapelastic, Mapelastic Smart, Mapelastic Turbo and Mapelastic AquaDefense Wet Area Membranes will meet this requirement. See Paragraphs 11.1 - 11.7.

Clause F2 HAZARDOUS BUILDING MATERIALS: Performance F2.3.1. Mapegum WPS, Mapelastic, Mapelastic Smart, Mapelastic Turbo and Mapelastic AquaDefense Wet Area Membranes meet this requirement.

Technical Specification

4.1 Materials supplied by MBP (NZ) Ltd are as follows:

- **Mapegum WPS** - A one-part, fast drying, polymer-based, ready-to-use, liquid-applied membrane. It is supplied as a light grey-coloured paste in 5, 10 and 25 kg buckets.
- **Mapelastic** - A two-part, flexible, cementitious, liquid-applied membrane. It is supplied as a Part A powder in 24 kg multi-wall bags and a Part B liquid in 8 kg plastic containers. When dry, the membrane is grey in colour.
- **Mapelastic Smart** - A two-part, flexible, cementitious, liquid-applied membrane. It is supplied as a Part A powder in 20 kg multi-wall bags and a Part B liquid in 10 kg plastic containers. When dry, the membrane is light grey in colour.
- **Mapelastic Turbo** - A two-part, cementitious, liquid-applied membrane. It is supplied as a Part A powder in 20 kg multi-wall bags and a Part B liquid in 16 kg containers. When dry, the membrane is light grey in colour.
- **Mapelastic AquaDefense** - A one-part solvent free, ultra-quick drying synthetic resin based paste in water dispersion liquid applied membrane. It is supplied as a light blue coloured paste in 15 kg drums.
- **Mapeband and Mapeband Gaskets** - A rubber-coated polyester tape for waterproofing expansion joints and sealing around drains and pipes. Available as a tape 120 mm wide in rolls 50 m long, and also in ready-made internal and external corners (90 and 270 degrees) and pipe gaskets 118 x 118 mm and 300 x 300 mm, "T" profiles 515 mm x 315 mm and cross profiles 515 x 515 mm.
- **Mapeband PE120** - A PVC fabric tape used to reinforce wall/wall and floor/wall joints. It is only used with Mapegum WPS and Mapelastic AquaDefense. Available as a tape 120 mm wide in rolls 10 m and 50 m long, and also as preformed angles 90° and 270°.
- **Mapetex Sel** - A macro-holed non-woven fabric, used to reinforce the first and second layer of the waterproofing membranes. It is supplied as a polypropylene, white fabric in rolls 100 mm, 200 mm and 1.0 m wide x 25 m long.
- **Mapenet 150** - A glass fibre mesh used to reinforce the membranes. It is supplied as a blue mesh in rolls 1.0 m wide and 50 m long.
- **Mapeband SA** - A self-adhesive Butyl Rubber tape used to reinforce all joints. It is supplied as a 2.0 mm thick, 100 mm wide tape in rolls 25 m long.
- **Mapei Primer 3296** - A acrylic primer for absorbent surfaces. It is an opaque colour and supplied in 5 and 10 kg drums.

RECEIVED 12/12/2022

Readers are advised to check the validity of this Appraisal by referring to the Valid Appraisals listing on the BRANZ website, or by contacting BRANZ.

Bcon22/0752 - WDC Approved Plans - 17/01/2023

Handling and Storage

5.1 All materials must be stored inside, up off concrete floors, in dry conditions, out of direct sunlight and out of freezing conditions. The membrane products have a shelf life of 24 months from date of manufacture in the original unopened packaging. Once opened, the products must be used within 3 months.

Technical Literature

6.1 Refer to the Appraisals listing on the BRANZ website for details of the current Technical Literature for the Mapegum WPS, Mapelastic, Mapelastic Smart, Mapelastic Turbo and Mapelastic AquaDefense Wet Area Membranes. The Technical Literature must be read in conjunction with this Appraisal. All aspects of design, use, installation and maintenance contained in the Technical Literature and within the scope of this Appraisal must be followed.

Design Information

General

7.1 Mapegum WPS, Mapelastic, Mapelastic Smart, Mapelastic Turbo and Mapelastic AquaDefense Wet Area Membranes are for use in buildings where an impervious waterproof membrane is required to floors and walls to prevent damage to building elements and adjoining areas.

7.2 Mapegum WPS and Mapelastic AquaDefense are designed to be used where a one-component product is preferred.

7.3 The membranes must be protected from physical damage by the application of ceramic or stone tile finishes.

7.4 Movement and control joints may be required depending on the shape and size of the building or room, and the tile finish specified. Design guidelines can be found in the BRANZ Good Practice Guide - Tiling.

7.5 Timber framing must comply with NZS 3604, or where specific engineering design is used, the framing shall be of at least equivalent stiffness to the framing provisions of NZS 3604, or comply with the serviceability criteria of AS/NZS 1170. In all cases framing must be provided so that the maximum span of the substrate as specified by the substrate manufacturer is met and all sheet edges are fully supported. Timber framing systems supporting the substrates must be constructed such that deflections do not exceed 1/360th of the span. Where NZS 3604 is used, the allowable joist spans given in Table 7.1 shall be reduced by 20%.

Substrates

Plywood

8.1 Plywood must be a minimum of 17 mm thick complying with AS/NZS 2269, CD Grade Structural with sanded C face upwards and treated to H3 (CCA treated). LOSP treated plywood must not be used.

8.2 The plywood must be laid with the face grain at right angles to the floor joists. The plywood must be supported with dwangs or framing with a maximum span of 400 mm in each direction, fixed with 10g x 50 mm stainless steel countersunk head screws at 150 mm centres along the sheet edges and 200 mm through the body of the sheets.

Fibre Cement Compressed Sheet/Fibre Cement Sheet Tile Underlay

8.3 Fibre cement compressed sheet and tile underlay must be manufactured to comply with the requirements of AS/NZS 2908.2 and must be specified by the manufacturer as being suitable for use as a wet area substrate. Installation must be in accordance with the instructions of the manufacturer.

Particleboard

8.4 Particleboard must be specified for the end use in accordance with NZS 3602.

RECEIVED 12/12/2022

Readers are advised to check the validity of this Appraisal by referring to the Valid Appraisals listing on the BRANZ website, or by contacting BRANZ.

Bcon22/0752 - WDC Approved Plans - 17/01/2023

Concrete and Concrete Masonry

8.5 Concrete and concrete masonry substrates must be to a specific engineering design meeting the requirements of the NZBC, such as concrete construction to NZS 3101, concrete slab-on-ground to NZS 3604 or NZS 4229 and concrete masonry to NZS 4229 and NZS 4230.

Wet Area Wall Linings

8.6 Plasterboard wall linings must be manufactured to comply with AS/NZS 2588, and be suitable for use in internal wet areas.

8.7 Fibre cement sheet must be suitable for use in wet areas and comply with AS/NZS 2908.2.

8.8 Installation of plasterboard or fibre cement wall linings must be carried out in accordance with the instructions of the manufacturer.

Durability

Serviceable Life

9.1 The Mapegum WPS, Mapelastic, Mapelastic Smart, Mapelastic Turbo and Mapelastic AquaDefense Wet Area Membranes, when subjected to normal conditions of environment and use, are expected to have a serviceable life of at least 15 years and be compatible with ceramic or stone tile finishes with a design service life of 15-25 years.

Maintenance

10.1 No maintenance of the membranes will be required provided significant substrate movement does not occur and the tile finish remains intact. Regular checks must be made of the tiled areas to ensure they are sound and will not allow moisture to penetrate. Any cracks or damage must be repaired immediately by repairing the tiles, grout and sealant.

10.2 In the event of damage to a membrane, the tiles must be removed and the membrane repaired by removing the damaged portion and applying a patch with sufficient overlap over the damaged section.

10.3 Drainage outlets must be maintained to operate effectively, and tile finishes must be kept clean.

Internal Moisture

11.1 Mapegum WPS, Mapelastic, Mapelastic Smart, Mapelastic Turbo and Mapelastic AquaDefense Wet Area Membranes are impervious to water and when appropriately designed and installed will avoid the likelihood of water penetrating behind linings or entering concealed spaces.

11.2 Surfaces must be finished with ceramic or stone tiles. A means of compliance with NZBC Clause E3.3.3 and E3.3.4 is given in NZBC Acceptable Solution E3/AS1, Paragraph 3.1.1 (b), 3.1.2 (b) and 3.3.1 (b).

11.3 Falls in showers and shower areas must be a minimum of 1 in 50. In unenclosed showers, falls must extend a minimum of 1500 mm out from the shower rose. Floor wastes and drainage flanges must be provided and the floor must fall to the outlet.

11.4 Mapegum WPS, Mapelastic, Mapelastic Smart, Mapelastic Turbo and Mapelastic AquaDefense Wet Area Membranes are suitable for use to contain accidental overflow to meet NZBC Clause E3.3.2. A means of compliance for overflow is given in NZBC Acceptable Solution E3/AS1, Paragraph 2.

11.5 The waterproofing membrane must completely cover shower bases, and for unenclosed showers it must extend a minimum of 1500 mm out from the shower rose. Further design guidance on waterproofing wet areas, including waterproofing walls and junctions can be obtained from AS 3740, the BRANZ Good Practice Guide - Tiling, and flooring and wall lining manufacturers.

11.6 Where water resistant wall finishes such as prefinished sheet materials are used they must be installed as per the NZBC requirements. They must flash over the membrane a minimum of 30 mm.

11.7 BRANZ recommends the entire floor be covered by a waterproof membrane for bath, shower and spa rooms where timber and plywood floors are used.

RECEIVED 12/12/2022

Readers are advised to check the validity of this Appraisal by referring to the Valid Appraisals listing on the BRANZ website, or by contacting BRANZ.

Bcon22/0752 - WDC Approved Plans - 17/01/2023

Installation Information

Installation Skill Level Requirement

12.1 Installation of the membranes must be completed by trained applicators approved by MBP [NZ] Ltd

12.2 Installation of substrates must always be carried out in accordance with the Mapegum WPS, Mapelastic, Mapelastic Smart, Mapelastic Turbo and Mapelastic AquaDefense Wet Area Membranes Technical Literature and this Appraisal by, or under the supervision of, a Licensed Building Practitioner [LBP] with the relevant Licence Class.

Preparation of Substrates

13.1 Substrates must be dry, clean and stable before installation commences. Surfaces must be smooth and free from nibs, sharp edges, dust, dirt or other materials such as oil, grease or concrete formwork release agents.

13.2 The relative humidity of concrete substrates must be 75% or less before membrane application. The concrete substrates can be checked for dryness by using a hygrometer as set out in BRANZ Bulletin No. 585.

13.3 All voids, cracks, holes, joints and excessively rough areas must be filled to achieve an even and uniform surface. Junctions of substrate abutments, such as at wall/floor and wall/wall junctions must have a reinforcement installed as set out in the Technical Literature.

13.4 Refer to the product manufacturer for correct priming requirements.

Membrane Installation

14.1 Installation must not be undertaken where the substrate surface temperature is below 8°C or above 35°C.

14.2 Mapelastic, Mapelastic Turbo and Mapelastic Smart require the liquid and powder to be mixed and left to stand for 5 minutes before re-mixing, then applying. Mapegum WPS and Mapelastic AquaDefense must be thoroughly stirred before application.

14.3 The membrane must be applied in a minimum of two coats at the rates set out in the Technical Literature. Subsequent coats must be applied in an opposite direction to the previous coat. The total finished system thickness of the Mapegum WPS must be a minimum of 1.0 mm, Mapelastic AquaDefense membrane must be a minimum of 1.0 mm and the Mapelastic, Mapelastic Turbo and Mapelastic Smart Membranes must be a minimum of 2.0 mm.

14.4 Application can be made by roller (medium/long nap), brush (long bristle), or a notched steel trowel (finished with a flat steel trowel).

14.5 Reinforcement fabric or Mapeband is bedded into the wet layer between coats to provide movement protection at wall/wall and wall/floor junctions, or any other areas such as joints in the flooring substrate, floor cracks, or around penetrations in the membrane. In all other situations, reinforcement provisions as set out in this Appraisal and the Technical Literature apply.

14.6 Clean up may be undertaken with water.

14.7 For further information refer to the product TDS.

Tiling

15.1 The membranes must be fully cured before tiling. The cured membranes must be protected at all times to prevent mechanical damage, so may require temporary covers until the finishing is completed.

15.2 Tiling must be undertaken in accordance with AS 3958.1 and the BRANZ Good Practice Guide - Tiling. The compatibility of the tile adhesive must be confirmed with the adhesive manufacturer or MBP [NZ] Ltd.

Inspections

RECEIVED 12/12/2022

Readers are advised to check the validity of this Appraisal by referring to the Valid Appraisals listing on the BRANZ website, or by contacting BRANZ.

Bcon22/0752 - WDC Approved Plans - 17/01/2023

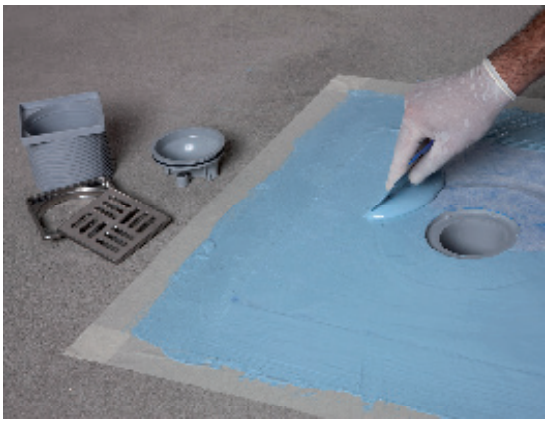

Impregnating Drain Vertical fabric with Mapelastic AquaDefense



Application of Mapeband to a wall-floor joint with Mapelastic AquaDefense



Application of the first coat of Mapelastic AquaDefense



Application of the second coat of Mapelastic AquaDefense

RECEIVED 12/12/2022

Readers are advised to check the validity of this Appraisal by referring to the Valid Appraisals listing on the BRANZ website, or by contacting BRANZ.

Bcon22/0752 - WDC Approved Plans - 17/01/2023

16.1 The Technical Literature must be referred to during the inspection of membrane installations.

16.2 Critical areas of inspection are:

- Construction of substrates, including crack control and installation of bond breakers and movement control joints.
- Moisture content of the substrate prior to the application of the membrane.
- Acceptance of the substrate by the membrane installer prior to application of the membrane.
- Installation of the membrane to the manufacturer's instructions, particularly installation to the correct thickness and use of reinforcement.
- Membrane curing and integrity prior to the installation of tiles including protection from mechanical damage during curing and prior to tile installation.

Health and Safety

17.1 Safe use and handling procedures for the membranes are provided in the Technical Literature. The materials must be used in conjunction with the relevant Material Safety Data Sheet.

Basis of Appraisal

The following is a summary of the technical investigations carried out:

Tests

18.1 The following testing has been undertaken by various organisations:

- Mapegum WPS and Mapelastic Wet Area Membranes in accordance with; EN 14891 for initial tensile adhesion strength, tensile strength after water contact, tensile adhesion strength after heat ageing, tensile adhesion strength after contact with lime water, tensile adhesion strength after contact with chlorine water, tensile adhesion strength after freeze-thaw cycles, waterproofing and crack bridging ability; DIN 53504 for tensile strength and maximum elongation after exposure to air and water immersion (Mapegum WPS only) and; Mapei internal method for water absorption after exposure and water immersion.
- Mapelastic Smart in accordance with EN 1502-4 for bond strength to concrete, freeze thaw, flexibility, static and dynamic crack bridging, water vapour permeability, impermeability to water and bond strength after water immersion, heat ageing, freeze-thaw and alkali ageing.
- Mapelastic in accordance with; EN 14891 for crack bridging after 28 days exposure to air, crack bridging after 7 days exposure to air and 21 days immersion in water, adhesion to concrete surface after 28 days exposure to air, adhesion to concrete surface after 28 days exposure to air and 21 days immersion in water; DIN 52615 for resistance to water vapour transmission and; Mapei internal method for deformability under low temperatures.
- Mapegum WPS in accordance with; EN 1384 for tensile adhesion strength after exposure and water immersion; UNI 8202/22 for water absorption after exposure and water immersion and; DIN 53505 for shore A hardness.
- Mapelastic AquaDefense in accordance with AS/NZS 4858 Appendix A including effect of heat ageing, bleach, detergent and water on tensile and elongation, water vapour transmission to ASTM E96-92 and cyclic movement resistance requirements of AS/NZS4858:2004 Appendix B. Testing to ANSI 118.10-1999 including seam strength, breaking strength, dimensional stability, resistance to fungi, static head and shear strength to ceramic tile and cement mortar. Also tensile adhesion on a plywood substrate and low temperature flexibility of the membrane.
- Mapelastic Turbo in accordance with EN1504-2 and EN14891 for water vapour permeability, capillary adsorbtion and permeability to water, permeability to water, freeze-thaw cycling, crack-bridging ability, pull off adhesion and bond strength. Also tensile adhesion on a plywood substrate.

18.2 The above test methods and results have been reviewed by BRANZ and found to be satisfactory.

18.3 Testing of Mapegum WPS and Mapelastic has been undertaken by BRANZ for durability in accordance with AS/NZS 4858: 2004, Appendix A covering tensile strength and elongation after immersion in water, bleach, detergent, and after heat ageing.

18.4 Testing for suitability of Mapelastic over particleboard in accordance with AS/NZS 4858: 2004, Appendix C has been undertaken by BRANZ and found to be satisfactory.

RECEIVED 12/12/2022

Readers are advised to check the validity of this Appraisal by referring to the Valid Appraisals listing on the BRANZ website, or by contacting BRANZ.

Bcon22/0752 - WDC Approved Plans - 17/01/2023

Other Investigations

19.1 An assessment was made of the durability of the Mapegum WPS, Mapelastic, Mapelastic Smart, Mapelastic Turbo and Mapelastic AquaDefense Wet Area Membranes by BRANZ technical experts.

19.2 Site inspections have been carried out by BRANZ to examine the practicability of installation and to examine completed installations.

19.3 The Technical Literature has been examined by BRANZ and found to be satisfactory.

Quality

20.1 The manufacture of the membranes has not been examined by BRANZ, but details regarding the quality and composition of the materials used were obtained by BRANZ and found to be satisfactory.

20.2 The quality management system of the membranes manufacturer has been assessed and found to be satisfactory.

20.3 The quality of supply of the membrane system materials to the market is the responsibility of MBP [NZ] Ltd.

20.4 Quality on site is the responsibility of the MBP [NZ] Ltd trained applicators.

20.5 Designers are responsible for the building design, and building contractors are responsible for the quality of installation of the framing systems and substrates.

20.6 Building owners are responsible for the maintenance of the ceramic or stone tiles in accordance with the instructions of MBP [NZ] Ltd.

Sources of Information

- AS/NZS 1170: 2002 Structural design actions.
- AS/NZS 2908.2: 2000 Cellulose-cement products – Flat sheet.
- AS/NZS 2269: 2012 Plywood-Structural.
- AS 3958.1: 2007 Guide to the installation of ceramic tiles.
- AS/NZS 4858: 2004 Wet area membranes.
- DIN 53504 May 1994 Determination of tensile stress/strain properties of rubber.
- EN 1348: 1997/A1 Adhesives for tiles – Determination of tensile adhesion strength for cementitious adhesives.
- EN 14891 March 2003 Liquid applied waterproofing membranes for use beneath ceramic tiling – Definitions, specifications and test methods.
- NZS 3101: 2006 The design of concrete structures.
- NZS 3602: 2003 Timber and wood-based products for use in buildings.
- NZS 3604: 2011 Timber-framed buildings.
- NZS 4229: 2013 Concrete masonry buildings not requiring specific engineering design.
- NZS 4230: 2004 Code of Practice for the design of masonry structures.
- Ministry of Business, Innovation and Employment Record of amendments - Acceptable Solutions, Verification Methods and handbooks.
- The Building Regulations 1992.
- Good Practice Guide - Tiling, BRANZ, April 2015.
- UNI 8202 – 22: 1987 Building. Water proof sheets. Determination of behaviour in water.

Amendments

Amendment No. 1, date 25 February 2021

This Appraisal has been amended to update the Appraisal holder.

RECEIVED 12/12/2022

Readers are advised to check the validity of this Appraisal by referring to the Valid Appraisals listing on the BRANZ website, or by contacting BRANZ.

Bcon22/0752 - WDC Approved Plans - 17/01/2023

BRANZ

In the opinion of BRANZ, Mapegum WPS, Mapelastic, Mapelastic Smart, Mapelastic Turbo and Mapelastic Aquadefense Wet Area Membranes are fit for purpose and will comply with the Building Code to the extent specified in this Appraisal provided they are used, designed, installed and maintained as set out in this Appraisal.

The Appraisal is issued only to MBP (NZ) Ltd, and is valid until further notice, subject to the Conditions of Appraisal.

Conditions of Appraisal

1. This Appraisal:
   a) relates only to the product as described herein;
   b) must be read, considered and used in full together with the Technical Literature;
   c) does not address any Legislation, Regulations, Codes or Standards, not specifically named herein;
   d) is copyright of BRANZ.
2. MBP (NZ) Ltd:
   a) continues to have the product reviewed by BRANZ;
   b) shall notify BRANZ of any changes in product specification or quality assurance measures prior to the product being marketed;
   c) abides by the BRANZ Appraisals Services Terms and Conditions;
   d) warrants that the product and the manufacturing process for the product are maintained at or above the standards, levels and quality assessed and found satisfactory by BRANZ pursuant to BRANZ's Appraisal of the product.
3. BRANZ makes no representation or warranty as to:
   a) the nature of individual examples of, batches of, or individual installations of the product, including methods and workmanship;
   b) the presence or absence of any patent or similar rights subsisting in the product or any other product;
   c) any guarantee or warranty offered by MBP (NZ) Ltd.
4. Any reference in this Appraisal to any other publication shall be read as a reference to the version of the publication specified in this Appraisal.
5. BRANZ provides no certification, guarantee, indemnity or warranty, to MBP (NZ) Ltd or any third party.

For BRANZ

Chelydra Percy
Chief Executive

Date of Issue:
09 February 2018

RECEIVED 12/12/2022

Readers are advised to check the validity of this Appraisal by referring to the Valid Appraisals listing on the BRANZ website, or by contacting BRANZ.

Bcon22/0752 - WDC Approved Plans - 17/01/2023

Rinnai

Installation guide

Rinnai INFINITY A-Series continuous flow water heaters

REU-A2626WG-ZK



REU-A2426WG-ZK



REU-A2024WG-ZK



REU-A1620WG-ZK



The Rinnai INFINITY A-Series models are not suitable for commercial or solar applications

RECEIVED 12/12/2022

Bcon22/0752 - WDC Approved Plans - 17/01/2023

Important

This appliance must be installed in accordance with:

- Manufacturer's installation instructions
- Current AS/NZS 3000, AS/NZS 3500, AS/NZS 5601.1 and G12/AS1

For use with Natural Gas or Universal LPG as indicated on the appliance.

Not suitable as a spa or swimming pool heater.
Not suitable for commercial or solar applications.

Appliance must be installed, commissioned and serviced by an authorised person, being in New Zealand a licensed gasfitter, in accordance with these instructions and all applicable local rules and regulations.

Warning

Improper installation, adjustment, alteration, service and maintenance can cause property damage, personal injury or loss of life.

For more information about buying, using, and servicing of Rinnai appliances call: 0800 RINNAI (0800 746 624).

Rinnai New Zealand Limited
105 Pavilion Drive, Mangere, Auckland
PO Box 53177, Auckland Airport, Auckland 2150

Phone: (09) 257-3800
Fax: (09) 257-3899
Email: info@rinnai.co.nz
Web: rinnai.co.nz
youtube.com/rinnainz
facebook.com/rinnainz

RECEIVED 12/12/2022

Bcon22/0752 - WDC Approved Plans - 17/01/2023

contents:

Before installation 4
Appliance location 4
General installation information 5
Water delivery temperature 6
Connections and fittings 7
Dimensions (mm) 8
Commissioning 10
PCB interface and dip switch settings 12
Flue diverter dip switch changes 14

Appendix 1
Water controller communication cables 15

RECEIVED 12/12/2022

Bcon22/0752 - WDC Approved Plans - 17/01/2023

Before installation

- **Check for damage:** Unpack the appliance and check for damage. DO NOT install any damaged items.
- **Check components and gas type**: Check all components have been supplied and that you have the correct gas type.
- **Read these instructions**: Get an overview of the steps required before starting the installation. Failure to follow these instructions could cause a malfunction of the appliance. This could result in serious injury and property damage.
- **Applicable models:** These instructions apply only to the Rinnai A-Series continuous flow water heater models listed on the cover page of this guide.

Appliance location

This appliance is designed for outdoor installations only. It MUST BE located above ground in open air with natural ventilation, without stagnant areas, where gas leakage and products of combustion can be rapidly dispersed by wind and natural convection.

The appliance MUST BE mounted on a vertical structure with the water and gas connections on the underside pointing downwards.

Location of the flue terminal MUST BE in accordance with Section 6 and Figure 6.2 of the AS/NZS 5601.

The appliance MUST BE placed **as close as practicable to the most frequently used hot water outlet** or outlets to reduce the delay time for hot water delivery[1]. For installations where the distance between the water heater and the outlets is considerable, a flow and return system can be used to minimise the waiting time for hot water delivery. Alternatively multiple appliances can be strategically placed to serve outlets with minimal delay time.

An AC 230 V, 10 A earthed power point must be provided adjacent[2] to the appliance. This power point must be weatherproof. It must be clear of the gas and water connections to the appliance and also the flue exhaust and water pressure relief valve. The power cord of the appliance is 1.5 m long.

All appliances MUST BE installed to ensure access can be gained without hazard or undue difficulty for maintenance and servicing. Sufficient clearances shall allow access and removal of all serviceable components. Appliances should not be mounted more than 2.5 m above the ground or floor level unless the customer can arrange permanent and safe access, or can provide another means of safe access.

Horizontal obstructions

AS/NZS 5601 states a minimum horizontal clearance of 500 mm between a building structure and obstruction facing the terminal. At 500 mm the obstruction needs to be the full height of the unit (as shown), and not a partial obstruction. A partial obstruction of less than 1 m could result in wind pushing the flue gases back into the flue terminal.

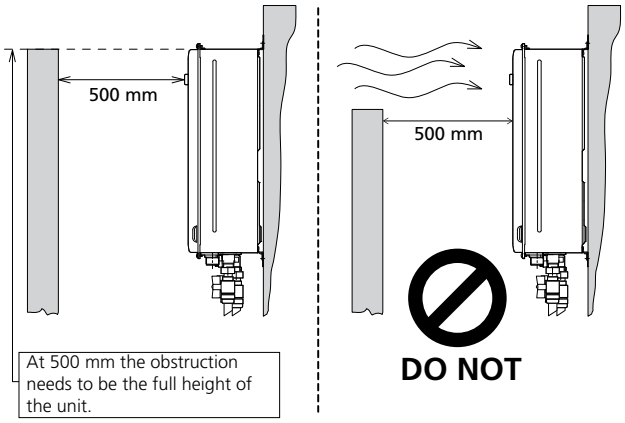

[1] Rinnai recommend a maximum pipe run of 10 m.
[2] Power point can be within the pipe cover if a pipe cover is installed—must comply with AS/NZS Wiring rules

RECEIVED 12/12/2022

Bcon22/0752 - WDC Approved Plans - 17/01/2023

General installation information

Securing the Rinnai INFINITY
The wall or structure on which the units are mounted MUST BE capable of supporting the weight of the appliance and associated pipe work. Refer p. 7 for the specific model weight.

Ensure that suitable fixing screws or bolts are used to secure the unit to the wall, in accordance with AS/NZS 5601 section 6. Wooden plugs shall not be used.

The top bracket has a keyhole slot so that the appliance can be positioned by hanging it on one screw, once in position the appliance can then be secured with appropriate fittings.

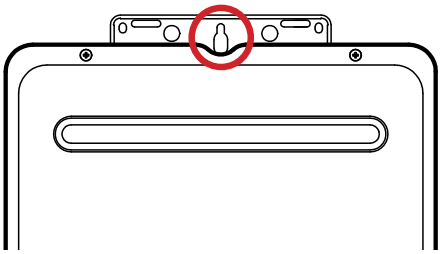

The appliance can be mounted directly against the wall or structure. There is no need to use non-combustible sheeting between the appliance back panel and the wall or structure for the purposes of meeting the temperature hazard requirements of AS/NZS 5601.

Pipe sizing
If the gas pipe sizing is insufficient the appliance won't perform properly. Gas pipe sizing must consider the gas input into this appliance as well as other gas appliances in the premises. The gas meter and regulator must be specified for this gas rate.

An approved sizing chart such as the one in AS/NZS 5601 should be used. Refer p. 7 for model specific gas consumption details.

Water pipe sizing and layout should be performed in accordance with AS/NZS 3500. All hot water pipe work should be insulated to optimise performance and energy efficiency.

Water supply
The appliance is intended to be permanently connected to the water mains.

Refer p. 7 for model specific operational water pressure limitations. Approved pressure limiting valves may be required if the maximum rated water supply pressures are exceeded. To achieve the rated flow, the minimum water supply pressures must be met.

The A-Series water heaters will operate at lower pressures than the specifications, but will not achieve the rated flow. Contact Rinnai for gravity fed or low pressure installations.

Water chemistry and impurity limits are detailed in the operation guide within the warranty section. Most metropolitan water supplies fall within the requirements.

If you are unsure about your local water quality, contact your water authority. If sludge or foreign matter is present in the water supply, a suitable filter or strainer should be incorporated in the water supply to the Rinnai INFINITY.

RECEIVED 12/12/2022

Bcon22/0752 - WDC Approved Plans - 17/01/2023

Water delivery temperature

Requirements of AS/NZS 3500 MUST BE considered regarding the temperature limitations of hot water supplied to areas used primarily for personal hygiene. The temperature of these areas may be limited to 55 °C or less.

If the appliance is to deliver water primarily for the purposes of personal hygiene in an early childhood centre, school, nursing home or similar facility as defined in AS/NZS 3500.4, a Temperature Limiting Device (TLD), such as a tempering valve may be required, even if the appliance is set to 55 °C or less. For these types of applications contact Rinnai.

Requirements for Rinnai INFINITY units installed without controllers

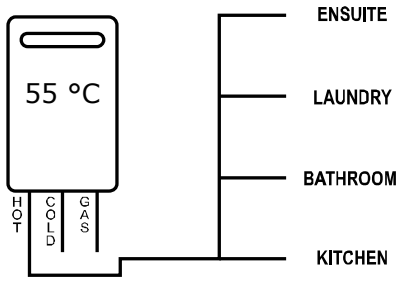

Diagram 1 - 55 °C Appliance

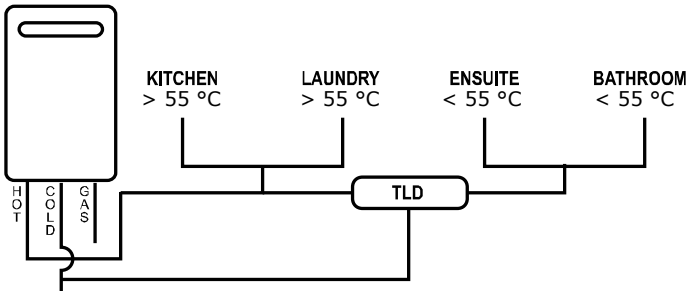

Diagram 2 - Not a 55 °C Appliance
(TLD = Temperature Limiting Device)

When the Rinnai INFINITY is set to deliver water at a temperature higher than 55 °C, it will be necessary to fit a Temperature Limiting Device for delivery to areas used for the purposes of personal hygiene.

RECEIVED 12/12/2022

Bcon22/0752 - WDC Approved Plans - 17/01/2023

Connections and fittings

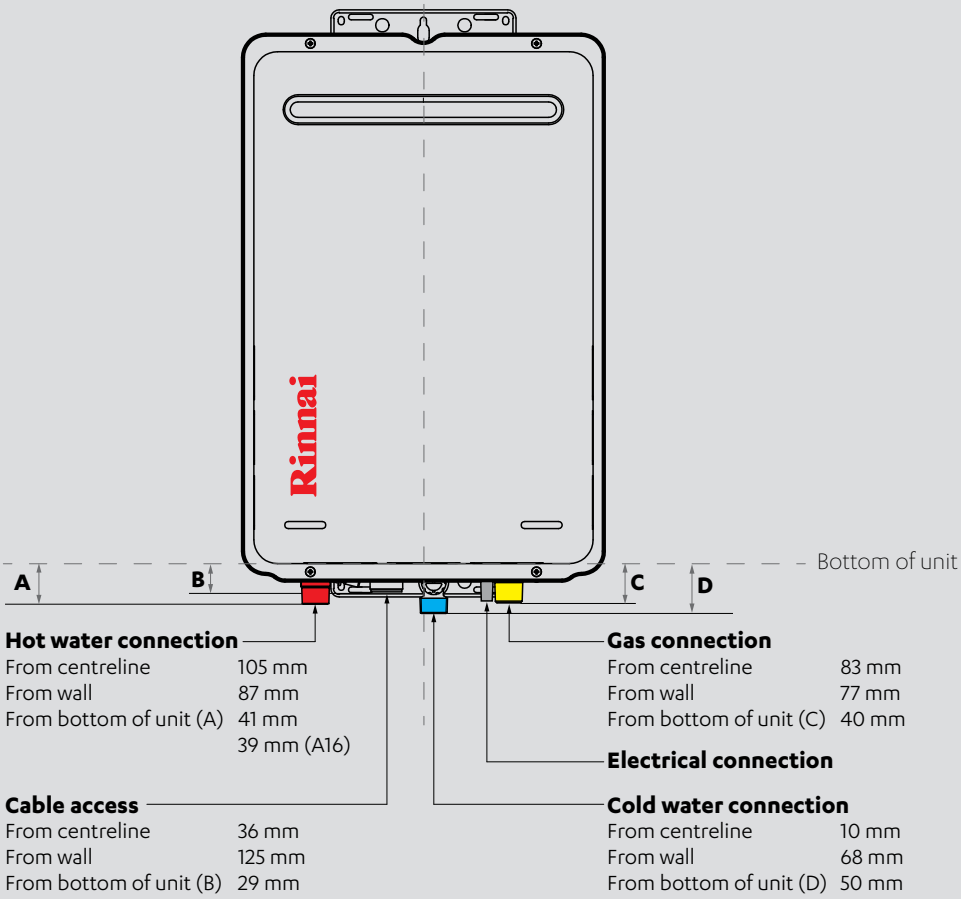

Model	Gas consumption MJ/h	Water Supply kPa Min.	Max.	Weight kg	Fittings Hot	Cold	Gas
A16 external REU-A1620WG-ZK	16.3-124	120	1000	13	R½ (15 mm)	R½ (15 mm)	R¾ (20 mm)
A20 external REU-A2024WG-ZK	19.9-156	160	1000	14	R¾ (20 mm)	R¾ (20 mm)	R¾ (20 mm)
A24 external REU-A2426WG-ZK	16.3-184	200	1000	15	R¾ (20 mm)	R¾ (20 mm)	R¾ (20 mm)
A26 external REU-A2626WG-ZK	16.3-199	200	1000	15	R¾ (20 mm)	R¾ (20 mm)	R¾ (20 mm)

Service connection points

An approved full flow isolation valve and disconnection union MUST BE fitted to the cold water inlet. A non-return valve is not required unless required by local regulations.

Isolation valves MUST NOT be fitted directly to the appliance.

It may be necessary to fit a temperature limiting device for delivery to areas used primarily for the purposes of personal hygiene, refer previous page for 'Water delivery temperature' information.

Purge gas and cold water supply lines to remove air and swarf before final connection. Swarf in the gas or water supplies may cause damage, a common problem, which is not covered by warranty.

RECEIVED 12/12/2022

Bcon22/0752 - WDC Approved Plans - 17/01/2023

Dimensions (mm)

The basic dimensions, (height, width, and depth) are the same. The difference between the models are the dimensions and position of the flue outlet.

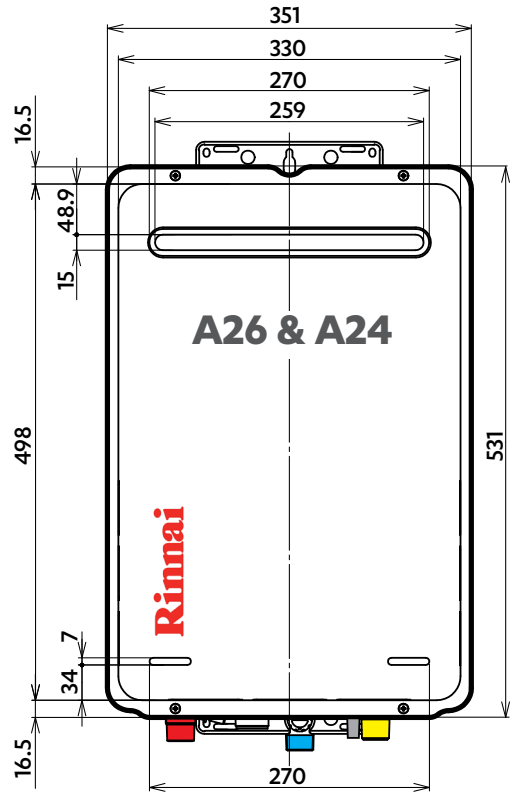

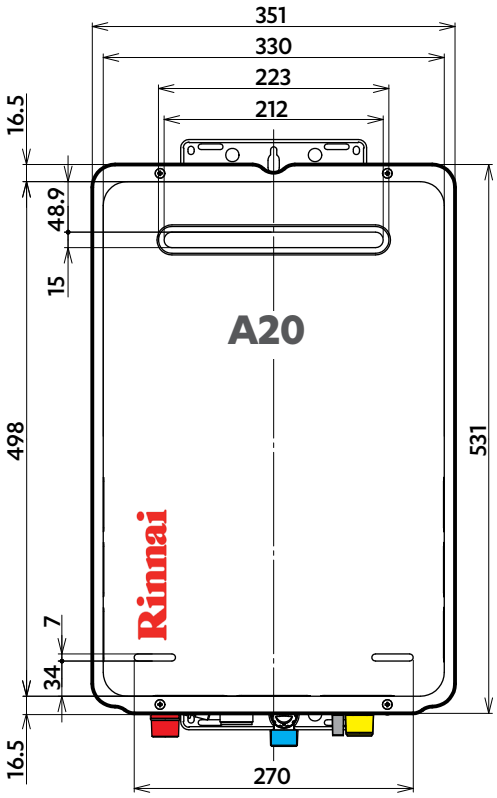

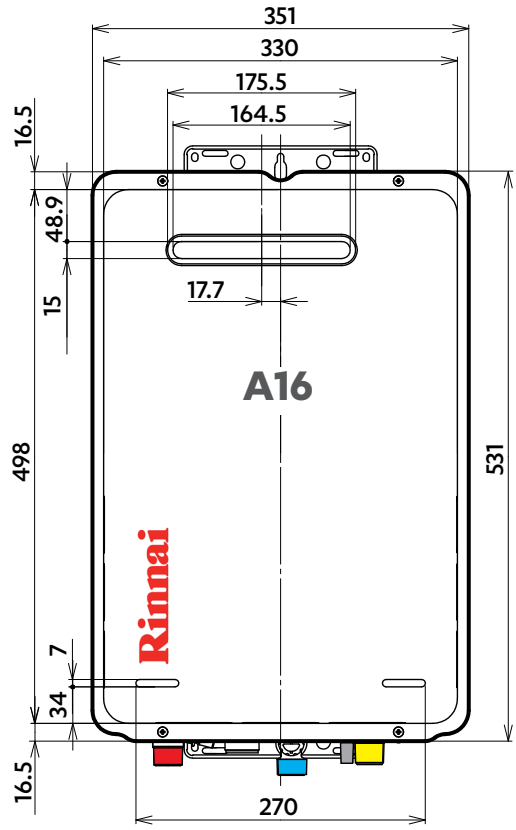

RECEIVED 12/12/2022

Bcon22/0752 - WDC Approved Plans - 17/01/2023

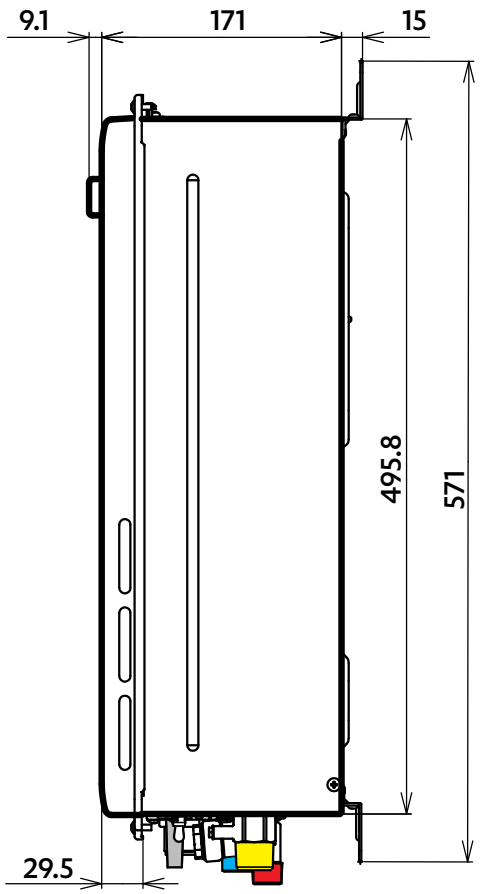

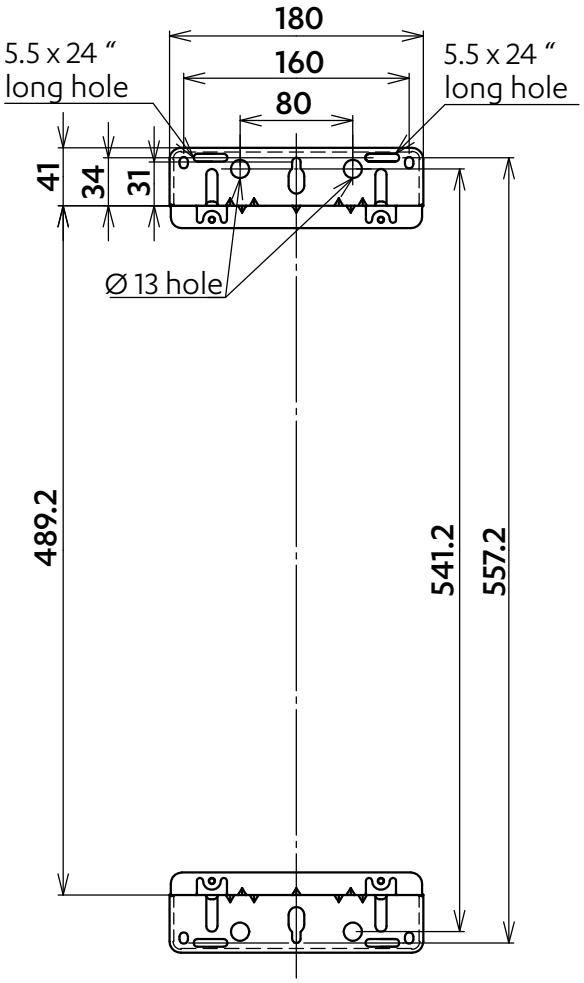

RECEIVED 12/12/2022

Bcon22/0752 - WDC Approved Plans - 17/01/2023

Commissioning

AS/NZS 5601.1, clauses 2.6.8 and 6.11.2, states that every part of a gas installation shall be commissioned prior to initial use. It is the installer's responsibility to ensure all current AS/NZS 5601 requirements are met. The URL's provided are links to short videos on how key steps are performed.



The appliance operation must be tested after installation. Ensure the building occupants do not have access to the hot water outlets during this procedure.

Please note
The Rinnai INFINITY A-Series comes with a factory preset outlet temperature of 55 °C. The high and low gas operating pressures are also factory preset. Under normal circumstances the operating pressures do not require adjustment during installation. Make adjustments ONLY if the unit is not operating correctly and all other possible causes for incorrect operation have been eliminated.

Inlet supply pressure to the appliance MUST BE checked and set within the operating parameters of the appliance in all instances.

If the appliance can not be adjusted to perform correctly call 0800 RINNAI (0800 746 624) for assistance.

Steps to commissioning a Rinnai INFINITY A-Series model

1 **Flush water pipes, and gas line**
Before final connection of the water heater flush the gas, hot and cold water supply lines. Swarf in the gas or water supplies may cause damage, a common problem, which is not covered by warranty.

2 **Connect gas line**

3 **Purge the gas line of air**

4 **Final connection test**

5 **Check supply pressure**
Operate ALL other gas appliances at their maximum gas rate. With all gas appliances on maximum the supply pressure must read between 1.13-3.0 kPa on Natural Gas. On LPG the pressure must be 2.75-3.0 kPa.

If the pressure is lower, the gas supply is inadequate and the appliance will not operate to specification. It is the installer's responsibility to check the gas meter, service regulator and pipe work for correct operation and sizing, and rectify as required.

RECEIVED 12/12/2022

Bcon22/0752 - WDC Approved Plans - 17/01/2023

6 PCB and/or dip switch settings checked.

Refer p.12-14.

PCB settings checked if the factory default temperature has been changed.

Dip switch settings checked if a flue diverter is fitted.

Short video: http://rinnai.co.nz/007

7 Operate and test for gas leaks

Replace the appliance front cover otherwise the unit won't operate correctly, and operate and test for gas leaks using an electronic leak detector.

8 Operational test—water flow and temperature at the hot water outlets

Confirm the hot water delivery temperatures using a thermometer.

If water controllers are fitted, it is necessary to test their operation through the complete range of functions, refer separate instructions provided with the water controllers.

9 Check cold water inlet filter

Inspect and clean the water inlet filter. This may need to be repeated to ensure the filter remains clear, especially on new installations.

Short video: http://rinnai.co.nz/006

If you feel the customer is capable of doing this check it would be beneficial to show them how to inspect and clean the filter as well.

10 Customer handover

After testing is completed, explain to the customer the functions and operation of the water heater and water controllers (if fitted).

Also talk to them about the gas, power, and water connections, how frost protection works, the procedure for draining the water heater, where to find the data plate, maintenance and servicing. If the customer is not there try and contact them by phone to relay the important points.

Ensure the installer details section is completed in the operation guide, the commissioning checklist has been completed and signed, and that guide and checklist are left with the customer.

RECEIVED 12/12/2022

Bcon22/0752 - WDC Approved Plans - 17/01/2023

PCB interface and dip switch settings

The PCB interface and dip switch settings must only be changed by a licensed gasfitter. They have been provided as there may be a requirement to change the temperature of the water delivered from the water heater or change the dip switch settings if fitting a flue diverter.

WARNING Care must be taken when changing the temperature or dip switch settings as they can be easily switched or bumped into the wrong position. Fully check the operation of the water heater before leaving including the temperature of the water delivered.

The cover of the water heater will need to be removed to carry out this operation. As this will expose live mains voltage wiring **please disconnect the power supply before removing the front cover**.

We wish to draw your attention to the requirements of the New Zealand Building Code and compliance document G12. This requires that water delivered to sanitary fixtures be no more than 55 °C. Increasing the water heater set temperature will require that you protect all sanitary fixtures to which the appliance is plumbed with suitable tempering valves or something similar.

Rinnai will accept no liability for issues arising out of the use of this information.

If you have any doubts about the performance of the water heater, please contact Rinnai by phoning 0800 RINNAI (0800 746 624).

The following information details settings for the Rinnai INFINITY A-Series models only. They are not applicable for other models.

Basic operation of the PCB interface

- To place the PCB into programming mode press PB2 until the LED digital display shows *1*, noting that the current set value will be displayed shortly afterwards.
- To alter a value press PB4, each press of the button will select the next available value.
- To change to another menu, press PB3, each press of the button will select the next available menu.
- To exit the programming mode and save the selected settings press PB2 until the LED display goes blank.

Note:

- If no buttons are pressed the PCB will automatically exit programming mode after 10 mins.
- Exiting programming mode sets the value last viewed as the current value.

RECEIVED 12/12/2022

Bcon22/0752 - WDC Approved Plans - 17/01/2023

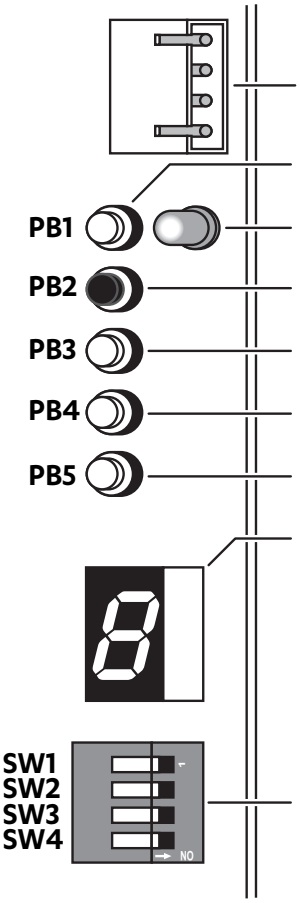

Communication interface socket

Data transfer button for PCB replacement - push button 1 (PB1)

Data transfer LED, illuminates to show data transfer in progress

MODE button, places the PCB into programming mode (PB2)

MENU button, cycles through available modes (PB3)
Forced combustion rate setting mode, raises the gas pressure

VALUE button, cycles through available values (PB4)
Forced combustion rate setting mode, lowers the gas pressure

Forced high/low selection button, (PB5)

LED digital display, displays menu, value and forced high/low status

Dip switch (factory default all switches are in the off position)
SW1 and SW3 are only set to ON when a flue diverter is fitted, otherwise they MUST remain set in the OFF position.

SW2 and SW4 are not used and MUST remain set in the OFF position.

Menu	Menu description	Value							
		A	b	C	d	E	F	H	J
1	Gas type	ULPG	NG	N/A	N/A	N/A	N/A	N/A	N/A
2*	Model	2626	2426	2024	1620	N/A	N/A	N/A	N/A
3	Fixed / Max. temp	55 °C[1]	65 °C	60 °C	50 °C	42 °C	40 °C	N/A	N/A
4	OFF water flow rate	+ 3 °C[2]	+ 6 °C	N/A	N/A	N/A	N/A	N/A	N/A
5	50 °C delivery adjustment temp.	Min Step 0	Increase Step 1	Increase Step 2	Increase Step 3	Increase Step 4	Increase Step 5	Increase Step 6	Increase Max

The temperature of outgoing hot water is constantly monitored by a built-in sensor. If the temperature of the outgoing hot water rises to more than 3 °C (6 °C #) above the selected temperature shown on the digital monitor or the preset limit when water controllers are fitted, the burner will automatically go out.

* Values in menu 2 cannot be adjusted.

1 Factory default

2 OFF water flow rate (+3 °C, factory default)

RECEIVED 12/12/2022

Bcon22/0752 - WDC Approved Plans - 17/01/2023

Flue diverter dip switch changes

When delivered ex-factory, by default SW1, SW2, SW3, and SW4 of the DipSW are set to the OFF position.

If a flue diverter is installed onto the water heater, SW1 and SW3 of the DipSW must be set to the ON position.

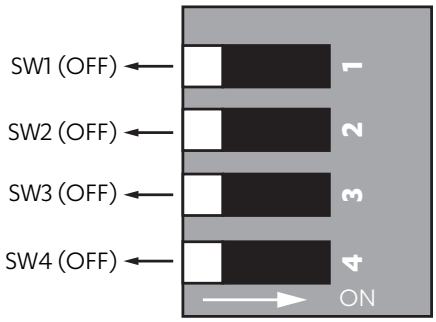

Default dip switch settings as they are ex-factory.

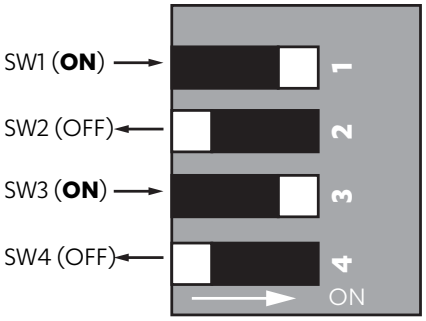

Dip switch settings required for flue diverter installation.

The dip switch change for flue diverters is required to increase the combustion fan speed, which helps overcome the friction losses from have a flue diverter installed on the water heater.

RECEIVED 12/12/2022

Bcon22/0752 - WDC Approved Plans - 17/01/2023

Appendix 1:
Water controller communication cables

Wired water controllers operate at an extra low voltage (12 V DC) which is supplied from the water heater, a 10 m long communication cable is supplied for connection to the water heater. Only Rinnai supplied communication cables may be used.

The water heater end of the cables is fitted with spade terminals. Only two pairs of cables (four spade connectors in total) may be terminated. When attaching three or four cables it is necessary to join the cable terminators as shown below.

For each pair cut off the existing spade connectors and re-terminate each pair into a new spade connector (A). Spade connectors are available from your local electrical component retailer

Single cables can be used when terminating up to two communication cables.

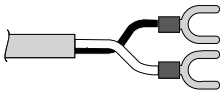

Paired cables are to be used when terminating three or four communication cables.

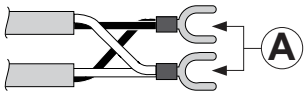

Connecting one or two communication cables
Follow steps one through five below to terminate the cables to the water heater.

Connecting three or four communication cables
To connect three or four cables, separate all the cables to be fitted into pairs.

When terminating three cables

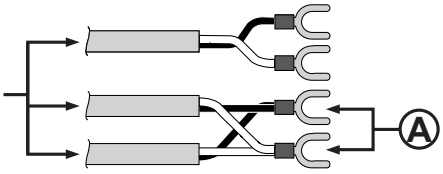

When terminating four cables

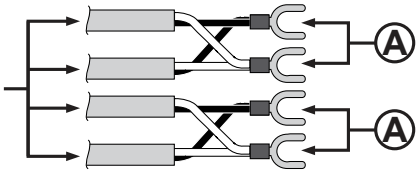

Follow steps one through five below to terminate the joined cable pairs to the water heater.

1. Isolate the power supply by switching the power point off and removing the power plug of the water heater from the electric power socket.
2. Removing the retaining screw of the cable connector at the base of the unit.
3. Swing the cable connector door open and thread the cable through the weather seal of the cable access hole, allowing sufficient cable length so that the sheath of the cable can be secured with the cable clamp supplied with the transceiver.
4. Loosen the screw terminals and connect the cable spade connectors to these terminals and re-tighten.

   Polarity is not important, either wire colour can be connected to either terminal.
5. Return the cable connector to the original position, taking care not to damage the cable wires in the process, and replace the retaining screw.

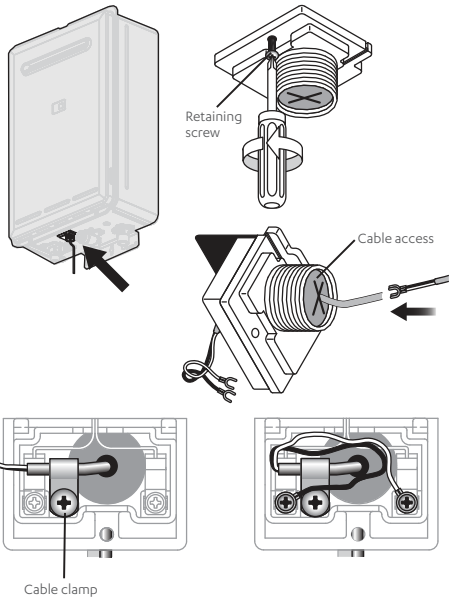

RECEIVED 12/12/2022

Bcon22/0752 - WDC Approved Plans - 17/01/2023

a touch of magic

RECEIVED 12/12/2022



Experience our innovation

Rinnai.co.nz | **0800 746 624**

http://www.youtube.com/rinnainz

U340-1336(01)

101 Guyton Street
P O Box 637, Whanganui
Phone: (06) 349 0001
Fax: (06) 349 0000
Email: wdc@whanganui.govt.nz
Web: www.whanganui.govt.nz

WHANGANUI DISTRICT COUNCIL
Te Kaunihera a Rohe o Whanganui

FORM 7
CODE COMPLIANCE CERTIFICATE NUMBER BCon22/0752

Section 95, Building Act 2004

Mr NP Oli
9 Tui Place
Gonville
Whanganui 4501

Building Consent No: BCon22/0752

Issue Date: 14/08/2024

The building:

Street address of building:	***Legal description of land where building is located:***
9 Tui Pl WHANGANUI	Lot 2 DP 570055 0.0777 Ha
Building name:	***Location of building within site/block number:***
Alteration	
Level/unit number:	***Current, lawfully established, use:*** *[include number of occupants per level and per use if more than 1]*
	Single Detached Residential
Year first constructed:	
1952	

The owner:

Name of Owner:	
Mr NP Oli	
Mailing address:	***Street Address/registered Office:***
9 Tui Place Gonville Whanganui 4501	9 Tui Place Gonville Whanganui 4501

Phone numbers:

Landline:		***Mobile:***	
Daytime:		***After hours:***	
Facsimile number:			
Email address:		***Website:***	

First point of contact for communications with the building consent authority:

Contact Person:	
Mr MR Lapuz	
Mailing address:	***Street Address/registered Office:***
85 Springvale Road, Springvale, Whanganui 4501	85 Springvale Road, Springvale, Whanganui 4501

Phone number:

Landline:		***Mobile:***	02102398523
Daytime:		***After hours:***	
Facsimile number:			
Email address:	mrlabuz@yahoo.co.nz	***Website:***	

Building Work

Building consent number:	***Issued by:***
BCon22/0752	Whanganui District Council
Type of Work	
Single Detached Residential	
Description of Work	
Proposed House Alteration and Addition (Alter Dining, Kitchen, Laundry and Bathroom)	
Intended Life	***Estimated Value***
Indefinite but not less than 50 years.	$70000.00

Code compliance:

The building consent authority named below is satisfied, on reasonable grounds that the building work complies with the building consent.

*Compliance schedule
There are no specified systems in this building.

This is a final Code Compliance Certificate issued in respect of all of the building work under the above Building Consent.

Signed for and on behalf of the Whanganui District Council:



GJ Hoobin
Building Control Manager