ABA20220988
APPROVED - Site Copy
Hastings District Council
20/09/2022

FORM 5
BUILDING CONSENT
Section 51, Building Act 2004

Building Consent Number ABA20220988

The Building

Street address of building:	6 Te Ara Matipou HASTINGS 4120
Legal description of land where building is located:	LOT 33 DP 578623
Building name:	N/A
Location of building within site/block number:	N/A
Level/unit number:	N/A

The Owner

Name of owner:	Redshaw Homes Ltd
Contact person:	Thea Anderson
Mailing address:	PO Box 3401, Napier 4142
Street address/registered office:	2 Rangitaiki Place, Te Awa
Landline:	N/A
Mobile:	027 2702486
Daytime:	068431092
After hours:	N/A
Facsimile number:	N/A
Email address:	office@redshawhomes.co.nz

First point of contact

First point of contact for communications with the council/building consent authority:

Full Name:	Thea Anderson
Mailing address:	PO Box 3401, Napier 4142
Landline:	N/A
Mobile:	027 2702486
Daytime:	068431092
After hours:	N/A
Facsimile number:	N/A
Email address:	office@redshawhomes.co.nz

ABA20220988
APPROVED - Site Copy
Hastings District Council
20/09/2022

Building Work

The following building work is authorised by this building consent:

New Dwelling

This building consent is issued under section 51 of the Building Act 2004. This building consent does not relieve the owner of the building (or proposed building) of any duty or responsibility under any other Act relating to or affecting the building (or proposed building).

This building consent also does not permit the construction, alteration, demolition, or removal of the building (or proposed building) if that construction, alteration, demolition, or removal would be in breach of any other Act.

This building consent is subject to the following condition(s):

Section 90 Inspection by Building Consent Authority - Agents authorised by the building consent authority are entitled, at all times during normal working hours or while work is being done, to inspect-

(a) land on which building work is being or is proposed to be carried out; and
(b) building work that has been or is being carried out on or off the building site; and
(c) any building.

Compliance Schedule

A compliance schedule is not required for the building.

Attachments

Copies of the following documents are attached to this building consent:

- Inspection(s) to be Undertaken
- Documents for Code Compliance Certificate
- Advisory Notes
- Features Associated with this Project
- Confirmation of Correct Siting of Building
- Certificate attached to project information memorandum (Form 4)
- Application for Code Compliance Certificate
- Site Copy Plans and Specifications



Tony Manunui
Building Consents Manager
On behalf of Hastings District Council

Date: 30 September 2022

ABA20220988
APPROVED - Site Copy
Hastings District Council
20/09/2022

INSPECTION(S) TO BE UNDERTAKEN

Please phone 871 5000 to arrange the inspection(s) when ready. Hastings District Council requires a minimum of 24 hours notice.

You will need to quote the following:

- Building consent number - ABA20220988
- Type of inspection (specific details)
- Site address
- Contact name and phone number

The inspection(s) listed are those deemed appropriate during processing of the building consent application. However, additional inspections may be required as deemed necessary by a Hastings District Council Building Officer as work is completed.

The following Inspection(s) are required for this consent

Post Footing Inspection

Siting / Foundation and Slab Combined Inspection

Under-floor Pre-slab Plumbing/Drainage Inspection

Pre-wrap Inspection

Pre-line/Moisture check/Insulation Inspection

Framing Pipeout Inspection

Cladding Cavity Batten Inspection

Cladding Modified Plaster /Mesh Coat Inspection

Cladding Polystyrene Fixing & Flashing Inspection

Drainage Inspection

Post Line/ Sheet Bracing Inspection

Final Building Inspection

ABA20220988
APPROVED - Site Copy
Hastings District Council
20/09/2022

DOCUMENTS FOR CODE COMPLIANCE CERTIFICATE

The following documentation is required in order for Hastings District Council to be satisfied on reasonable grounds that compliance with the Building Consent has been achieved and therefore a Code Compliance Certificate can be considered:

Application for Code Compliance Certificate

"As Built" Drainage Plan

Energy Work Certificate - Electrical Certificate of Compliance - Electrical Safety Certificate

Ground Conditions - Engineers Report or Producer Statement (PS4)

A CPEng or PEngGeol* engineer with a practice field in Geotechnical is required to confirm the on-site ground conditions assumed in the foundation and floor-slab design. The report must consider the floor-slab design as well as the foundation in relation to the bearing capacity of the ground. No concrete may be poured prior to a Hastings District Council Building Inspector receiving the report/PS4 and signing off the foundation inspection. The report must be available for the HDC Building Inspector in order that the foundation inspection can be completed.

* Professional Engineering Geologist (PEngGeol) registered with Engineering New Zealand with a minimum of 10 years demonstrable experience.

4.10 Recommendations

The geotechnical investigations, earthworks testing has established that the 62 lots within the subdivision are suitable for development in accordance with the conclusions and recommendations outlined below.

1. We recommend that construction may proceed for all lots subject to the usual Building Consent Application process.
2. We recommend that structural raft type foundations are adopted for all future dwellings within the subdivision. All topsoil should be stripped from the building footprint prior to foundation construction.
3. Suitable bearing pressures for typical residential type structures are provided in Section 4.6. If higher values are required, a site-specific assessment will need to be carried out. During construction of the dwelling foundations, shallow testing (Scala penetrometer or similar) should be undertaken to ensure consistency with the values assumed in design. This will allow for a Producer Statement (PS4) – Construction Review to be submitted to HDC for the Code of Compliance Certificate.

ABA20220988
APPROVED - Site Copy
Hastings District Council
20/07/2022

Structural Elements - Engineers Producer Statement (PS4)

A CPEng engineer with a practice field in Structural is required to carry out a structural review for all the specifically designed structural elements covered by this building consent.

The engineer is required to have carried out all necessary structural inspections during construction of the building to enable their sign-off and completion of Certification/PS4.

Inspection of cut / fill* building platform:
Bearing Capacity Confirmation (Ref. 1S3)

Pre-pour visit:
Reinforcing, pipes penetrations details, Pods layout

Waterproofing - Internal Membrane Applicator Certification

Waterproofing systems and membranes are required to be installed by trained installers approved by the manufacturer of the applicable product.

ABA20220988
APPROVED - Site Copy
Hastings District Council
20/09/2022

RESTRICTED BUILDING WORK

The work listed below has been deemed as restricted building work during processing of the building consent and must be undertaken, or overseen, by an appropriately qualified Licensed Building Practitioners (LBP).

Please notify Hastings District Council in writing of the LBP undertaking restricted building work prior to the work commencing.

BIN010	Siting / Foundation and Slab Combined Inspection	Carpenter
BIN040	Pre-wrap Inspection	Carpenter
BIN050	Pre-line/Moisture check/Insulation Inspection	Carpenter
BIN060	Cladding Cavity Batten Inspection	Carpenter
BIN076	Cladding Modified Plaster /Mesh Coat Inspection	Plasterer
BIN077	Cladding Polystyrene Fixings & Flashing Inspection	Plasterer
BIN115	Post Line/ Sheet Bracing Inspection	Carpenter
BPR023	LBP Roofer	Roofer
BIN005	Siting / Foundation Inspection	Carpenter

Upon completion of the restricted building work a Record of Work memorandum must be supplied to the Territorial Authority Hastings District Council for each area of restricted building work performed (Note: notification forms and record of work memorandum can be obtained from Council if required).

ABA20220988
APPROVED - Site Copy
Hastings District Council
20/09/2022

ADVISORY NOTES

The owner shall supply scaffolding or equipment compliant with the requirements of the current Health and Safety in Employment Act for use by the Hastings District Council officers as required to undertake all listed inspections within the building consent. If this equipment is not supplied the inspection will not take place. The owner/ contractor will be informed and the inspection failed. Another inspection will need to be called for by the owner (at additional cost) when suitable equipment has been installed to allow the inspection to take place.

BC0002 Amendments or Minor Variations must be approved by Hastings District Council before the work is carried out.

BC0004 Full payment of all outstanding fees, charges and development levies are to be paid prior to the issue of a Code Compliance Certificate.

BC0005 Owner/agents are to advise Hastings District Council, in writing, of any changes to their Agent or First point of contact

BC0008 If an application for a Code Compliance Certificate has not been made within 2 years from the date the building consent was granted, the Hastings District Council must, decide whether to issue a Code Compliance Certificate. This period may be extended by agreement between the Hastings District Council and Owner.

BC0009 The Owner of the property is responsible for the siting of the building and the location of the property boundary pegs in accordance with the approved building consent documents. The enclosed confirmation of siting form is to be signed and provided to the Hastings District Council Building Officer at the time of the inspection.

BC0043 This building consent will lapse if you do not commence work within 12 months of the date of issue or agree an extension of time with the Hastings District Council.

ABA20220988
APPROVED - Site Copy
Hastings District Council
20/09/2022

FEATURES ASSOCIATED WITH THIS PROJECT

This property is located in an area identified as being prone to seismic hazard. The site has a high to very high liquefaction susceptibility. Site-specific investigations should be conducted to determine actual soil properties for liquefaction susceptibility where protection greater than that provided under the New Zealand Building Code is desired.

This property is located in an area identified as being prone to seismic hazard. The site has a ground shaking potential with a rating of 3 or 4. Site-specific investigations should be conducted to determine actual soil properties for ground shaking potential where protection greater than that provided under the New Zealand Building Code is desired.

A Consent Notice is registered on the Certificate of Title of this site that may affect the proposed development.

BP016 This building consent is issued subject to the provision of Section 37 of the Building Act 2004. A Form 4 certificate has been attached to this consent.

BP019 Hastings District Council may not hold all records of hazardous substance contamination on this site. It is advisable to contact the Hawkes Bay Regional Council to check their records.

ABA20220988
APPROVED - Site Copy
Hastings District Council
20/09/2022

CONFIRMATION OF CORRECT SITING OF BUILDING

Building Consent No: ABA20220988
(Please quote this number when booking inspections)

This form is to be completed and available for collection by the Building Officer when the siting/ foundation inspection is carried out. The inspection will not be passed until the form has been accepted.

Name: (Owner / Builder) _____
(delete not applicable)

Project Address: 6 Te Ara Matipou HASTINGS 4120

Legal Description LOT 33 DP 578623

I hereby verify that I have checked that the building currently being constructed at the above stated address is the correct distance from the legal site boundaries and as per the approved Building Consent plans.

Signed: _____ Date: _____

ABA20220988
APPROVED - Site Copy
Hastings District Council
20/09/2022

HASTINGS DISTRICT COUNCIL
Te Kaunihera ā-Rohe o Heretaunga

FORM 4

Certificate attached to Project Information Memorandum or Building Consent

Section 37, Building Act 2004

Restrictions on commencing building work under the Resource Management Act 1991

The building work referred to in the attached project information memorandum or building consent for ABA20220988 is also required to have the following resource consents under the Resource Management Act 1991:

Land use consent to waive density (awaiting new titles)

As these resource consents will or may materially affect the building work to which the attached project information memorandum or building consent relates, until they have been granted:

No building work may proceed.

Failure to comply with the requirements of this notice may result in legal action being taken against you under the Resource Management Act 1991.

MJWaldron

Michelle Waldron

Planning Consents Officer

On behalf of Hastings District Council

Date 08 September 2022

Trim Ref: 106641#0018

Hastings District Council
207 Lyndon Rd East, Hastings 4122
Private Bag 9002, Hastings 4156
cccdocs@hdc.govt.nz
Ph 871 5000

ABA20220988
APPROVED - Site Copy
Hastings District Council
20/09/2022

HASTINGS DISTRICT COUNCIL
Te Kaunihera ā-Rohe o Heretaunga

Form 6
APPLICATION FOR CODE COMPLIANCE CERTIFICATE
Section 92, Building Act 2004

SECTION 1 THE BUILDING CONSENT

Building consent number: ABA20220988 | **Issued by:** Hastings District Council

OWNER

Note: If any of the details shown below have changed, then please add the new information in the area provided:

DETAILS ON FILE:	UPDATED DETAILS:
Name & mailing address of owner: Redshaw Homes Limited PO Box 3401 Napier 4142	**Name of owner(s):** **Owner(s) mailing address:** _____ _____
Owner's contact details: Landline: 06 8431092 Mobile: 027 2702486;021270248 Email: office@redshawhomes.co.nz	**Owner(s) contact details:** Landline:_____ Mobile:_____ Email:_____

SECTION 2 AGENT

DETAILS ON FILE:	UPDATED DETAILS:
Name & mailing address of Agent: Redshaw Homes Limited PO Box 3401 Napier 4142	**Name of Agent:** **Agent's mailing address:** _____ _____
Agent's contact details: Landline: 06 8431092 Mobile: 027 2702486;021270248 Email: office@redshawhomes.co.nz	**Agent's contact details:** Landline:_____ Mobile:_____ Email:_____

Relationship to owner: If not already provided, please attach a written authorisation from the owner, giving authority to make the application on their behalf

SECTION 3 APPLICATION

All building work carried out under the above building consent was completed on: ____/____/____

Building Personnel: Provide details for all building personnel who carried out the building work including all licensed building practitioner(s)(LBP) who carried out or supervised the restricted building work:

Builder:	**Other:**
Business/Name: _____	Business/Name: _____
Address: _____	Address: _____
Mobile: _____ Landline: _____	Mobile: _____ Landline: _____
Licence / Registration: _____ Class: _____	Licence / Registration: Class:
LBP No:_____	LBP No:_____
Work carried out or supervised: _____	Work carried out or supervised: _____

ABA20220988
APPROVED - Site Copy
Hastings District Council
20/09/2022

Cladding Installer:
Business/Name: _____
Address: _____
Mobile: _____ Landline: _____
Licence / Registration: _____ Class: _____
LBP No: _____
Work carried out or supervised: _____

Brainlayer:
Business/Name: _____
Address: _____
Mobile: _____ Landline: _____
Licence / Registration: _____ Class: _____
LBP No: _____
Work carried out or supervised: _____

Electrician:
Business/Name: _____
Address: _____
Mobile: _____ Landline: _____
Licence / Registration: _____ Class: _____
LBP No: _____
Work carried out or supervised: _____

Roofer:
Business/Name: _____
Address: _____
Mobile: _____ Landline: _____
Licence / Registration: _____ Class: _____
LBP No: _____
Work carried out or supervised: _____

Plumber:
Business/Name: _____
Address: _____
Mobile: _____ Landline: _____
Licence / Registration: _____ Class: _____

COMPLIANCE SCHEDULE REQUIREMENTS: Specified Systems:

The following specified systems are contained on the compliance schedule for the building and, in the opinion of the personnel who installed them, are capable of performing to the performance standards set out in the building consent:

- ☐ SS1 Automatic systems for fire suppression
- ☐ SS2 Emergency warning systems
- ☐ SS3/1 Automatic door
- ☐ SS3/2 Access controlled doors
- ☐ SS3/3 Interfaced fire or smoke doors or windows
- ☐ SS4 Emergency lighting systems
- ☐ SS5 Escape route pressurisation systems
- ☐ SS6 Riser mains
- ☐ SS7 Automatic backflow preventers
- ☐ SS8/1 Passenger carrying lifts
- ☐ SS8/2 Service lifts
- ☐ SS8/3 Escalator and moving walks
- ☐ SS9 Mechanical ventilation or air conditioning systems
- ☐ SS10 Building maintenance units
- ☐ SS11 Laboratory fume cupboards
- ☐ SS12/1 Audio loops
- ☐ SS12/2 FM radio & infrared beam transmission systems
- ☐ SS13/1 Mechanical smoke control
- ☐ SS13/2 Natural smoke control
- ☐ SS13/3 Smoke curtains
- ☐ SS14/1 Emergency power systems
- ☐ SS14/2 Signs for SS1-13
- ☐ SS15/1 Spoken information intended to facilitate evacuation; and
- ☐ SS15/2 Final exits
- ☐ SS15/3 Fire separations
- ☐ SS15/4 Signs for facilitating evacuation
- ☐ SS15/5 Smoke separations
- ☐ SS16 Cable cars

SECTION 5 ATTACHMENTS

The following documents are attached to this application:

- ☐ Certificates from the personnel who carried out the work
- ☐ Certificate that relate to the energy work
- ☐ Evidence that specified systems are capable of performing to the performance standards set out in the building consent
- ☐ Current manufacturer's certificate, if applicable
- ☐ Memoranda from licensed building practitioner(s) stating what restricted building work they carried out or supervised.

I request that you issue a code compliance certificate for this work under section 95 of the Building Act 2004.

The code compliance certificate should be sent to: ☐ Owner ☐ Agent

Signed by the owner:

Signature:

Name:

Date:

OR

Signed by the agent: [on behalf of, and with written authority from the owner]

Signature:

Name:

Date:

ABA20220988
APPROVED - Site Copy
Hastings District Council
20/09/2022



LOT 33, FRIMLEY

PLAN CONTENTS:

SHEET 1	COVER SHEET
SHEET 2	SITE PLAN
SHEET 3	FLOOR PLAN
SHEET 4	DIMENSION PLAN
SHEET 5	ELEVATIONS
SHEET 6	DRAINAGE PLAN
SHEET 7	SLAB PLAN
SHEET 8	SECTIONS
SHEET 9	WATER RETICULATION PLAN
SHEET 10	BRACING PLAN
SHEET 11	ROOF PLAN
SHEET 12	JOINERY SCHEDULE
SHEET 13	ELECTRICAL PLAN
SHEET 14	FOUNDATION DETAILS
SHEET 15	ROOF DETAILS
SHEET 16	CLADDING DETAILS
SHEET 17	CLADDING AND WINDOW DETAILS
SHEET 18	CLADDING DETAILS
SHEET 19	WINDOW DETAILS
SHEET 20	POST DETAILS
SHEET 21	WET FLOOR DETAILS

REDSHAW HOMES

PROPOSED NEW HOME FOR
REDSHAW HOMES
LOT 33, 6 TE ARA MATIPOU
FRIMLEY, HASTINGS

LICENSED BUILDING PRACTITIONER
www.dbh.govt.nz
BUILDING CONFIDENCE

CHECK ALL MEASUREMENTS ON SITE

Amendments:
Date:

Architectural Services by:

ONEDRAFTING

P O Box ~
Napier
Cell: 027 5431005
Email:
enquiries@onedrafting.co.nz

Issue:
CONSENT

Designed and Drawn:
Pam Oliver

Issue Date:
15/07/2022

Checked:
Tony Black

Plot Date: 15/07/2022
Plot Time: 11:08:01 AM

Scale: NTS
Sheet Size: A3

Project #
21-025

Sheet # 1
of 21

ABA20220988
APPROVED - Site Copy
Hastings District Council
20/09/2022

27/10/2022 District Plan Check Michelle W

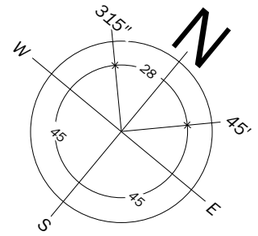

LEGAL DESCRIPTION:
LOT 33
PT LOT 6 DP 285 BLK XV HERETAUNGA SD
No 6
AREA 470m²

WIND ZONE - HIGH WIND
EXPOSURE ZONE - B
EARTHQUAKE ZONE - 3

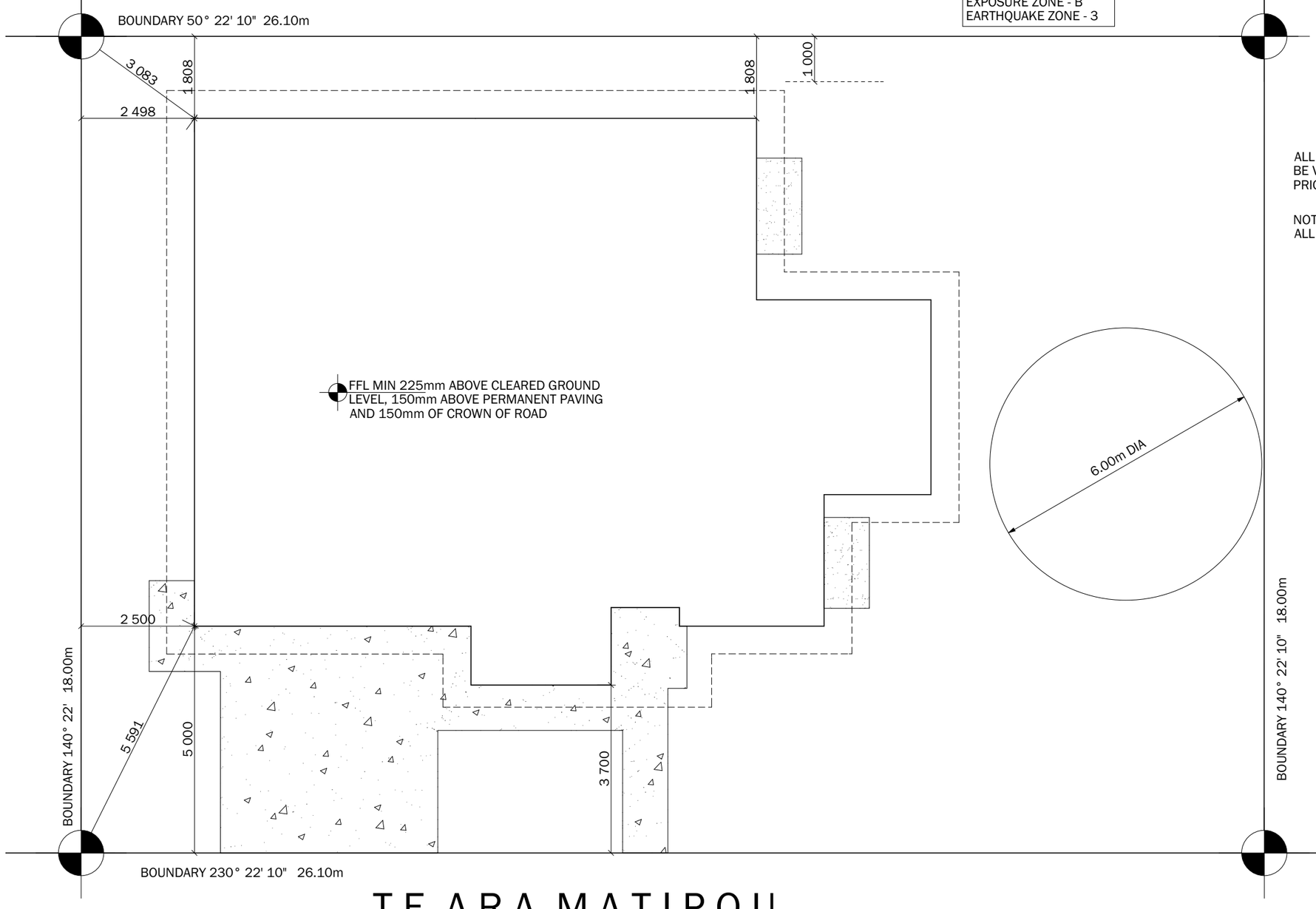

ALL SITE DIMENSIONS AND BEARINGS TO BE VARIFIED TO CERTIFICATE OF TITLE PRIOR TO SET OUT

NOTE:
ALL DIMENSIONS TO FRAMING LINE.

TE ARA MATIPOU

DATUM 0mm
CROWN OF ROAD

AREA = 470m²
LIVING AREA = 125.48m²
GARAGE = 37.52m²
TOTAL BUILDING AREA = 163.0m²
NET BUILDING SITE COVERAGE (FLOOR AREA + SOFFITS OVER 600mm WIDE) = 164.33m²
TOTAL SITE COVERAGE = 34.96%

SITE PLAN

REDSHAW HOMES

PROPOSED NEW HOME FOR
REDSHAW HOMES
LOT 33, 6 TE ARA MATIPOU
FRIMLEY, HASTINGS

LICENSED BUILDING PRACTITIONER
BUILDING CONFIDENCE
www.dbh.govt.nz

CHECK ALL MEASUREMENTS ON SITE

Amendments:
Date:

Architectural Services by:
ONEDRAFTING

P O Box ~
Napier
Cell: 027 5431005
Email:
enquiries@onedrafting.co.nz

Issue:
CONSENT

Designed and Drawn:
Pam Oliver

Issue Date:
15/07/2022

Checked:
Tony Black

Plot Date: 15/07/2022
Plot Time: 11:08:01 AM

Scale: 1:100
Sheet Size: A3

Project #
21-025

Sheet # 2
of 21

ABA20220988
APPROVED - Site Copy
Hastings District Council
20/09/2022

27/10/2022 District Plan Check Michelle W

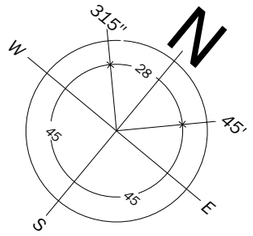

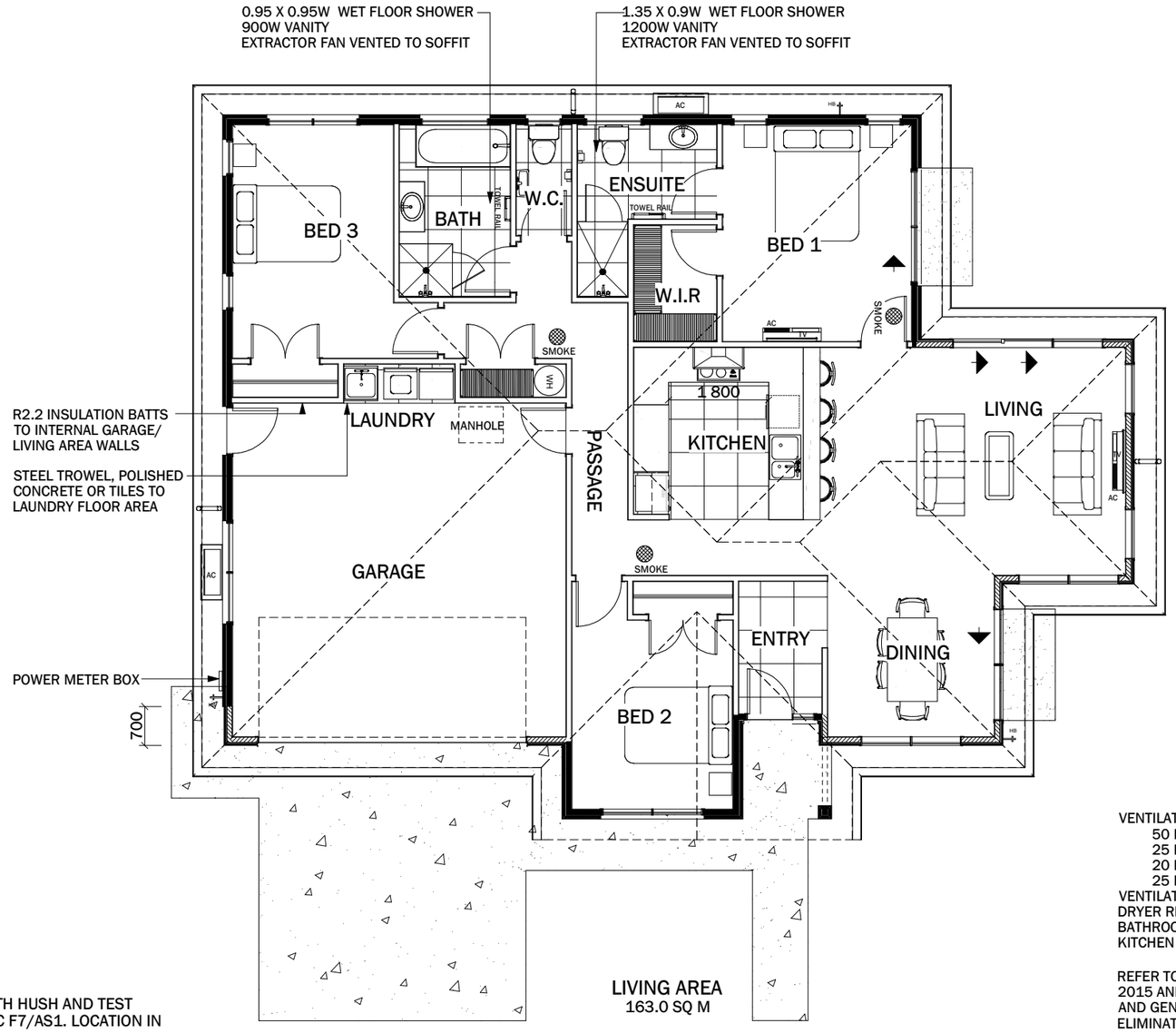

ELEVATIONS

SMOKE — DENOTED SMOKE ALARM FITTED WITH HUSH AND TEST FACILITIES COMFORMING WITH NZBC F7/AS1. LOCATION IN ACCORDANCE WITH NZS 4514.
SOUND PRESSURE LEVEL OF SYSTEMS SHALL BE NOT LESS THAN 75dBA WHEN MEASURED AT THE SLEEPING POSITION

SHOWER SCREEN PANELS TO BE SAFETY GLASS TO NZS 4223

MECHANICAL EXTRACT CANOPY ABOVE COOKTOP,
150mm DIAMETER, RIGID OR SEMI-RIGID DUCTING TO
EXTERIOR OF BUILDING, OUTLET THROUGH SOFFIT

CONCRETE FINISH:
NON SLIP U2 TO DRIVEWAYS AND APPROACH PAVING

VENTILATION REQUIREMENTS TO NZBC G4:
- 50 L/S FOR COOKTOPS
- 25 L/S FOR SHOWERS AND BATHS
- 20 L/S FOR LAUNDRIES
- 25 L/S FOR TOILETS

VENTILATION EXTRACT MANROSE MODEL (OR SIMILAR)
DRYER REAR VENT THRU WALL XP150 (OPTIONAL)
BATHROOMS IN-LINE FAN0085
KITCHEN CANOPY WALL/CEILING 150mm DCT2323

REFER TO THE REQUIREMENTS OF THE HEALTH AND SAFETY AT WORK ACT 2015 AND WORKSAFE NZ: GUIDELINES FOR THE PROVISION OF FACILITIES AND GENERAL SAFETY IN THE CONSTRUCTION INDUSTRY. IF THE ELIMINATION OR ISOLATION OF POTENTIAL HAZARDS IS NOT POSSIBLE THEN MINIMISE HAZARDS IN THIS WORK ON SITE BY USING THE PROPER EQUIPMENT AND TECHNIQUES AS REQUIRED IN THE MPNZA HEALTH AND SAFETY PROGRAMME. SUPPLY PROTECTIVE CLOTHING AND EQUIPMENT. INFORM EMPLOYEES AND OTHERS ON SITE OF THE HAZARDS AND PUT IN PLACE PROCEDURES FOR DEALING WITH EMERGENCIES.

FLOOR PLAN

REDSHAW HOMES

PROPOSED NEW HOME FOR
REDSHAW HOMES
LOT 33, 6 TE ARA MATIPOU
FRIMLEY, HASTINGS

LICENSED BUILDING PRACTITIONER · BUILDING CONFIDENCE · www.dbh.govt.nz

CHECK ALL MEASUREMENTS ON SITE

Amendments:
Date:

Architectural Services by:
ONEDRAFTING
P O Box ~
Napier
Cell: 027 5431005
Email:
enquiries@onedrafting.co.nz

Issue: CONSENT

Designed and Drawn: Pam Oliver

Issue Date: 15/09/2022

Checked: Tony Black

Plot Date: 15/09/2022
Plot Time: 10:17:35 AM

Scale: 1:100

Sheet Size: A3

Project # 21-025

Sheet # 3 of 21

27/10/2022 District Plan Check Michelle W

FRAMING NOTES:
1) ALL EXTERIOR FRAMING 90X45 SG10 STUDS @ 600CRS (UNLESS OTHERWISE NOTED
2) "M" (hy90 LINTEL) REFERS TO MEMBER NO. IN ACC. "designIT' PRODUCER STATEMENT.
3) EXTERNAL WALLS TREATMENT = H1.2.
4) INTERNAL WALLS TREATMENT = H1.2.
5) ROOF TRUSSES TREATMENT = H1.2
6) INTERIOR FRAMING 90X45 SG8 STUDS @ 600 CRS UNLESS OTHERWISE NOTED
7) WIND ZONE 'HIGH'
8) SOFFIT WIDTH = 450mm, GABLE = 450mm
9) STUD HEIGHT = 2610 TO U/S TRUSSES
10) DWANGS @ 800mm C/C EXTERIOR WALLS, 844mm C/C INTERIOR
11) ROOF = METAL TILE
12) PITCH = 22°
13) FLOOR AREA = 163.0m²

GIRDER TRUSS T01A

LOAD BEARING WALL LB

ABA20220988
APPROVED - Site Copy
Hastings District Council
20/09/2022

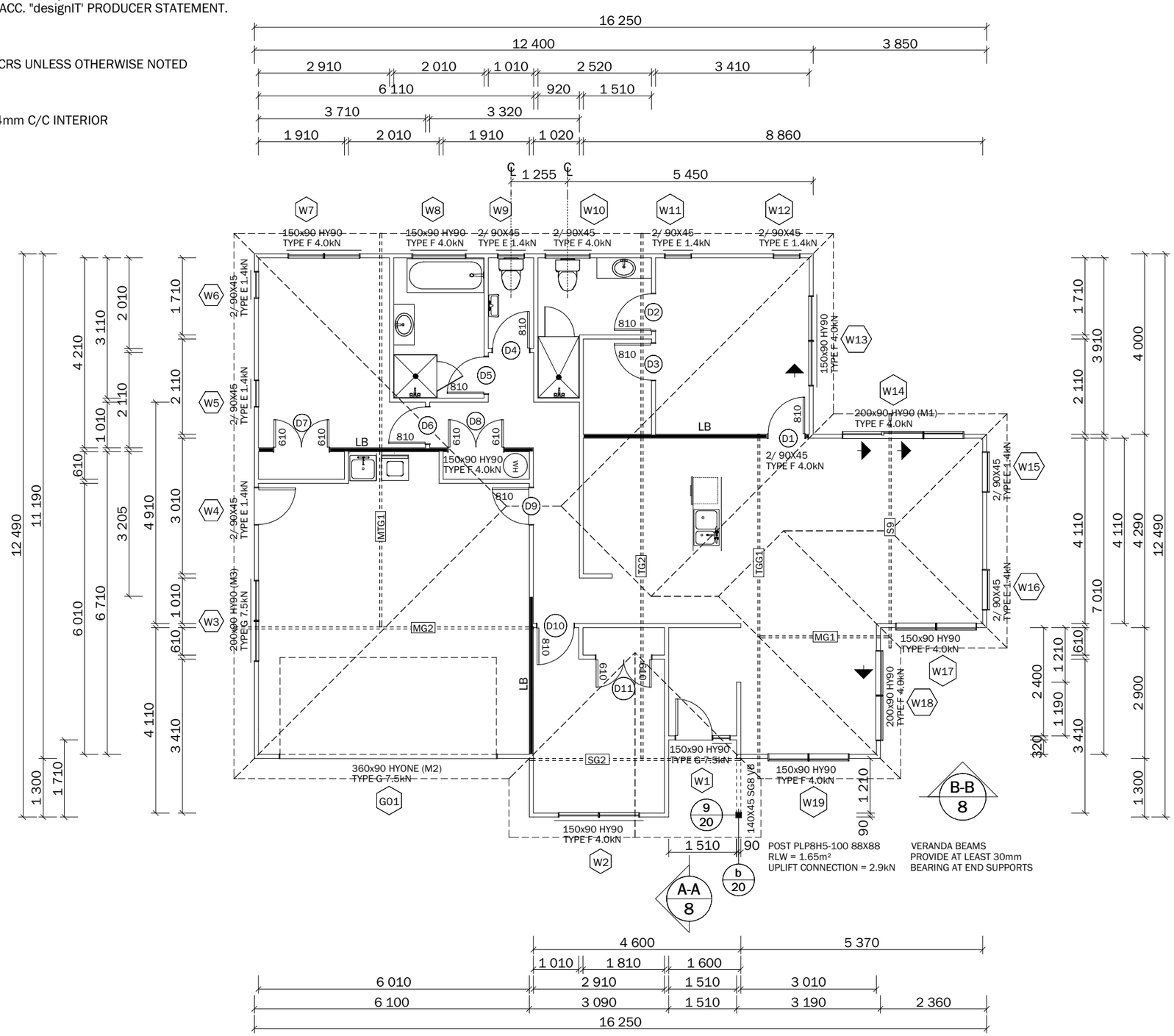

EXTERIOR WINDOW 01 - 2060mm HEAD HEIGHT
EXTERIOR WINDOWS - 2100mm HEAD HEIGHT
INTERIOR DOORS - 2000mm HEAD HEIGHT
GARAGE DOOR - 2120 FRAMED OPENING

DIMENSION PLAN

REDSHAW HOMES

PROPOSED NEW HOME FOR
REDSHAW HOMES
LOT 33, 6 TE ARA MATIPOU
FRIMLEY, HASTINGS

LICENSED BUILDING PRACTITIONER - BUILDING CONFIDENCE - www.dbh.govt.nz

CHECK ALL MEASUREMENTS ON SITE

Amendments:
Date:

Architectural Services by:
ONEDRAFTING
P O Box ~
Napier
Cell: 027 5431005
Email:
enquiries@onedrafting.co.nz

Issue: CONSENT
Designed and Drawn: Pam Oliver
Issue Date: 15/07/2022
Checked: Tony Black
Plot Date: 15/07/2022
Plot Time: 11:08:01 AM
Scale: 1:100
Sheet Size: A3
Project # 21-025
Sheet # 4 of 21

27/10/2022 District Plan Check Michelle W

ELEVATION 1

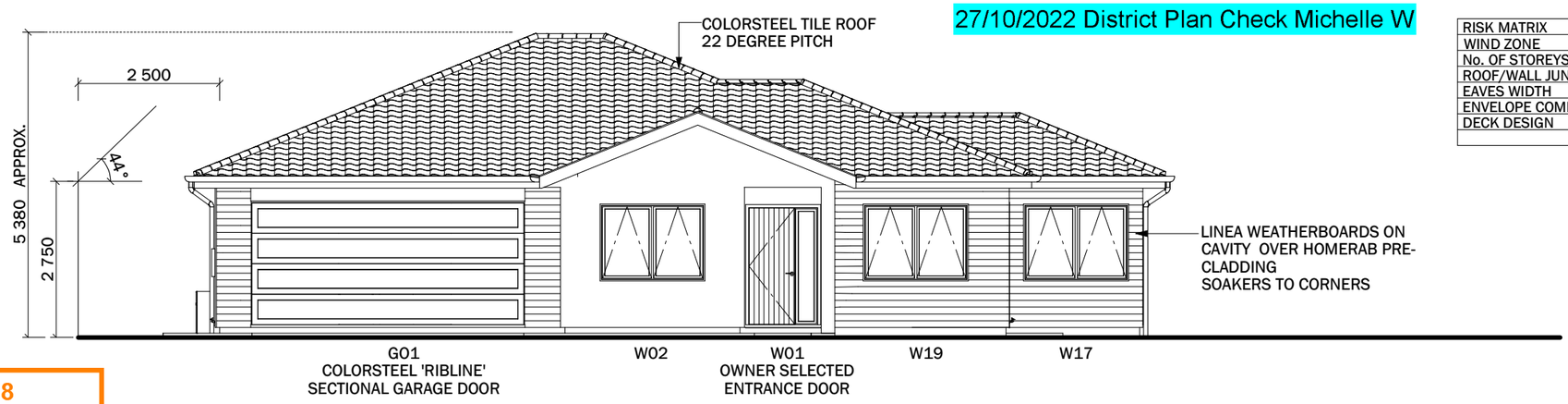

RISK MATRIX		
WIND ZONE	= HIGH	=1
No. OF STOREYS	= LOW	=0
ROOF/WALL JUNCTIONS	= LOW	=0
EAVES WIDTH	= MED	=1
ENVELOPE COMPLEXITY	= MED	=1
DECK DESIGN	= LOW	=0
	TOTAL RISK	=3

ABA20220988
APPROVED - Site Copy
Hastings District Council
20/09/2022

ELEVATION 2

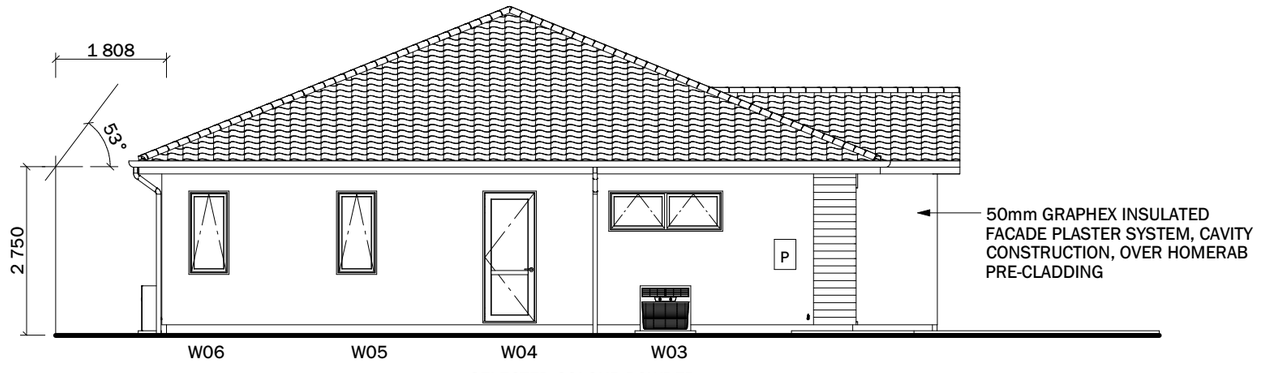

RISK MATRIX		
WIND ZONE	= HIGH	=1
No. OF STOREYS	= LOW	=0
ROOF/WALL JUNCTIONS	= LOW	=0
EAVES WIDTH	= MED	=1
ENVELOPE COMPLEXITY	= MED	=1
DECK DESIGN	= LOW	=0
	TOTAL RISK	=3

ELEVATION 3

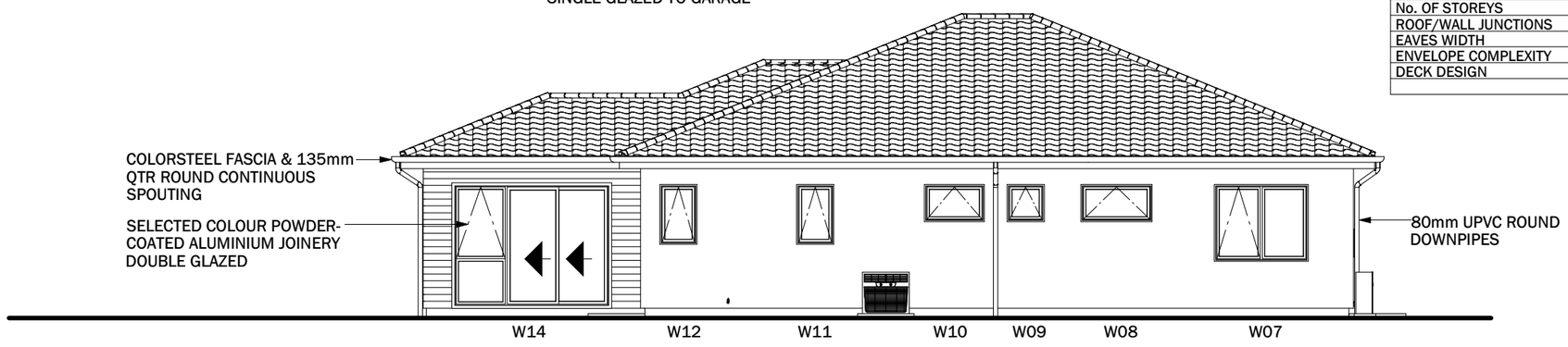

RISK MATRIX		
WIND ZONE	= HIGH	=1
No. OF STOREYS	= LOW	=0
ROOF/WALL JUNCTIONS	= LOW	=0
EAVES WIDTH	= MED	=1
ENVELOPE COMPLEXITY	= MED	=1
DECK DESIGN	= LOW	=0
	TOTAL RISK	=3

ELEVATION 4

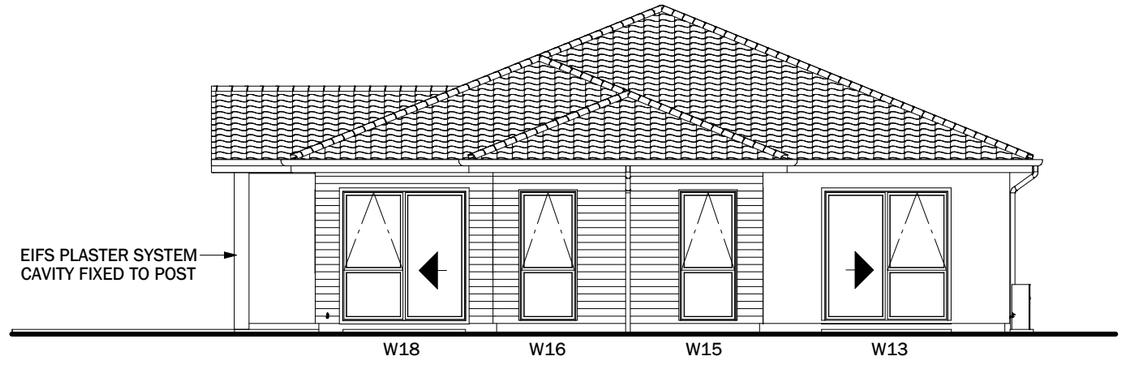

RISK MATRIX		
WIND ZONE	= HIGH	=1
No. OF STOREYS	= LOW	=0
ROOF/WALL JUNCTIONS	= LOW	=0
EAVES WIDTH	= MED	=1
ENVELOPE COMPLEXITY	= MED	=1
DECK DESIGN	= LOW	=0
	TOTAL RISK	=3

ELEVATIONS

REDSHAW HOMES

PROPOSED NEW HOME FOR REDSHAW HOMES
LOT 33, 6 TE ARA MATIPOU
FRIMLEY, HASTINGS

LICENSED BUILDING PRACTITIONER
www.dbh.govt.nz
BUILDING CONFIDENCE

CHECK ALL MEASUREMENTS ON SITE

Amendments:
Date:

Architectural Services by:
ONEDRAFTING
P O Box ~
Napier
Cell: 027 5431005
Email:
enquiries@onedrafting.co.nz

Issue:
CONSENT

Designed and Drawn:
Pam Oliver

Issue Date:
15/09/2022

Checked:
Tony Black

Plot Date:
15/09/2022
Plot Time: 10:17:36 AM

Scale: 1:100
Sheet Size: A3

Project #
21-025

Sheet #
5
of 21

ALL SANITARY DRAINAGE TO AS/NZS 3500 PART 2.2

UNDER SLAB FIXTURE BRANCH DRAINS TO BE 65mm DIA WITH MINIMUM FALL 1:40
MINIMUM SIZES FOR TRAP OUTLETS AND DISCHARGE PIPES ABOVE SLAB SHALL BE

BASIN	40mm	1:40 MIN FALL
SHOWER	40mm	1:40 MIN FALL
SINK	40mm	1:40 MIN FALL
DISHWASHER	40mm	1:40 MIN FALL
BATH	40mm	1:40 MIN FALL
WASHING MACHINE	40mm	1:30 MIN FALL
LAUNDRY TUB	40mm	1:30 MIN FALL

ALL INSPECTION POINTS/ INSPECTION BENDS UNDER
PAVING/DRIVE TO HAVE REMOVABLE AIRTIGHT LIDS
AT GROUND LEVEL

ABA20220988
APPROVED - Site Copy
Hastings District Council
20/09/2022

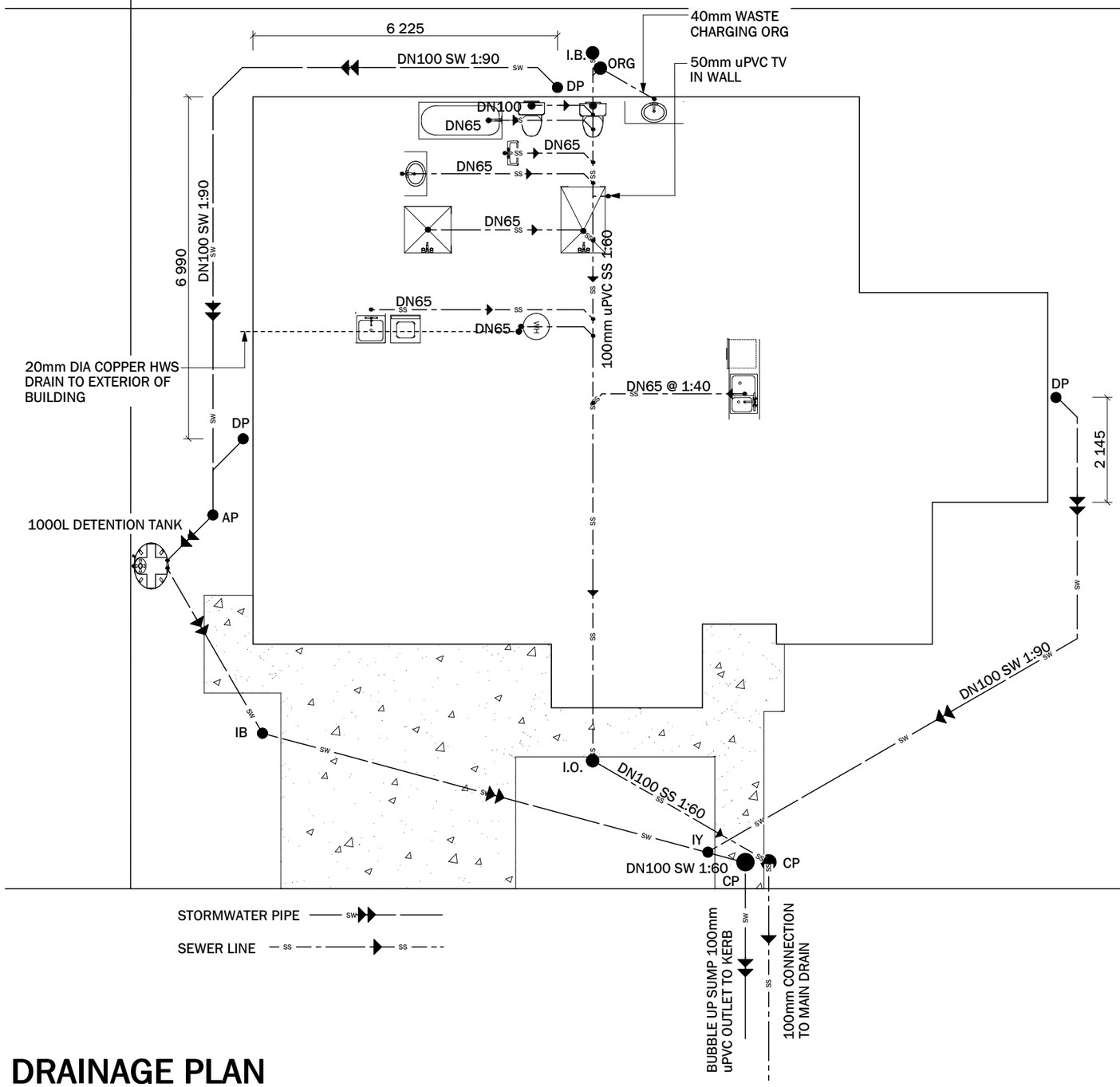

DRAINAGE PLAN

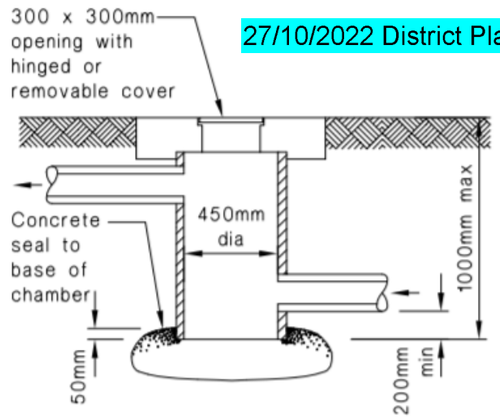

BUBBLE UP SUMP

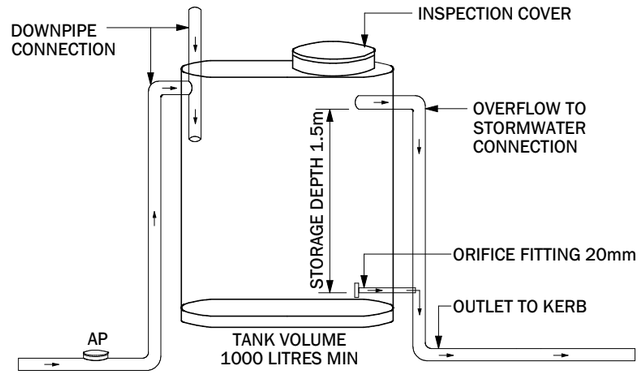

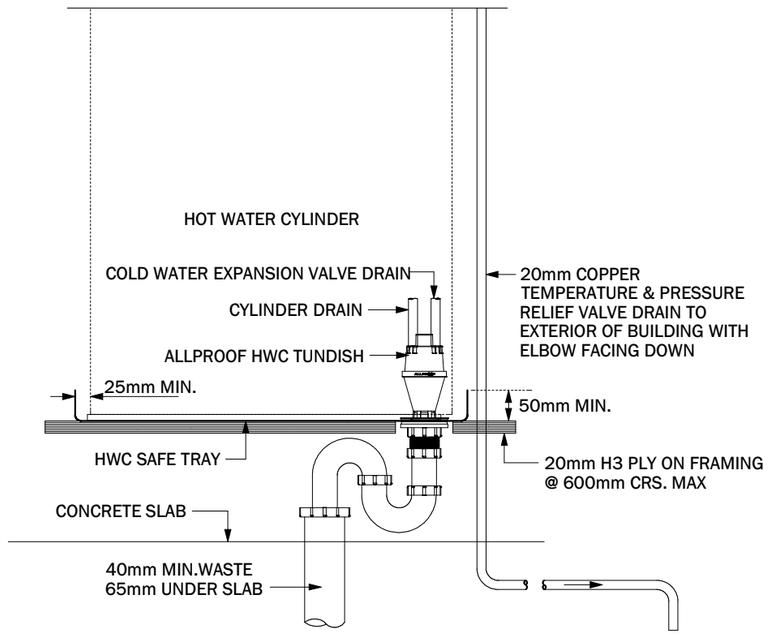

HOT WATER CYLINDER SAFE TRAY

27/10/2022 District Plan Check Michelle W

REDSHAW HOMES

PROPOSED NEW HOME FOR
REDSHAW HOMES
LOT 33, 6 TE ARA MATIPOU
FRIMLEY, HASTINGS

LICENSED BUILDING PRACTITIONER
BUILDING CONFIDENCE
www.dbh.govt.nz

CHECK ALL
MEASUREMENTS
ON SITE

Amendments:
Date:

Architectural Services by:
ONEDRAFTING
P O Box ~
Napier
Cell: 027 5431005
Email:
enquiries@onedrafting.co.nz

Issue:
CONSENT

Designed and Drawn:
Pam Oliver

Issue Date:
15/09/2022

Checked:
Tony Black

Plot Date:
15/09/2022
Plot Time: 10:17:36 AM

Scale: 1:100
Sheet Size: A3

Project #
21-025

Sheet #
6
of 21

ABA20220988
APPROVED - Site Copy
Hastings District Council
20/09/2022

NOTE:
DIMENSIONS TO OUTSIDE OF TIMBER FRAMING.

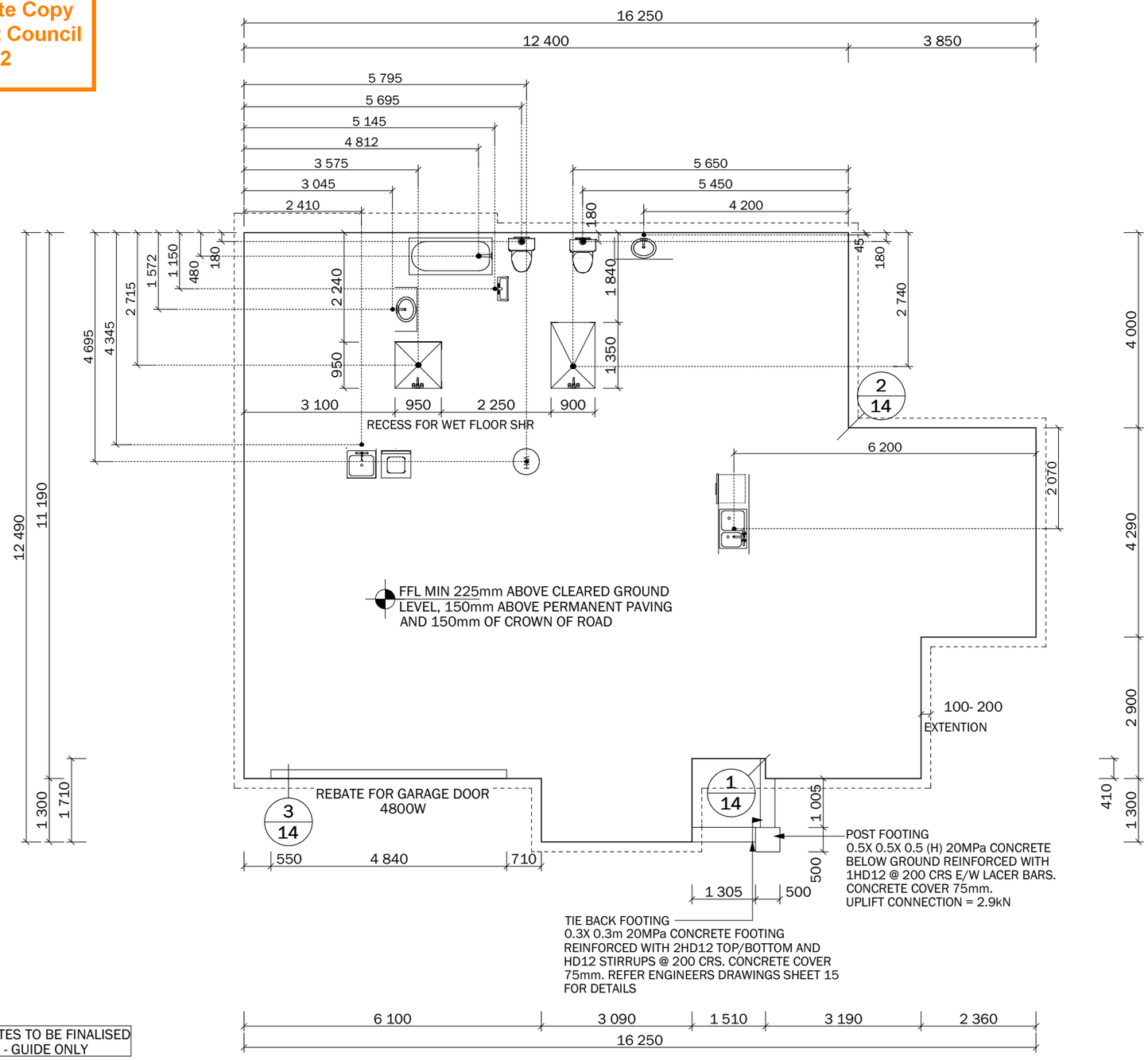

DIMENSIONS TO WASTES TO BE FINALISED ON SITE BY PLUMBER - GUIDE ONLY

NOTE:
FIRTH CONCRETE MIX IP2519X SLAB WITH SE62 MESH ON 0.25 POLYTHENE ON 40mm MAX SAND BLINDING ON COMPACTED AP40 OR AP65 ENGINEERED FILL 100-200mm DEPTH

GEOTECHNICAL REPORT REF. 1062 ISSUED BY INITIA

FIRTH XPOD CONCRETE FLOOR
REFER TO ENGINEERS PLANS AND DETAILS

SLAB PLAN

REDSHAW HOMES

PROPOSED NEW HOME FOR
REDSHAW HOMES
LOT 33, 6 TE ARA MATIPOU
FRIMLEY, HASTINGS

LICENSED BUILDING PRACTITIONER · BUILDING CONFIDENCE · www.dbh.govt.nz

CHECK ALL MEASUREMENTS ON SITE

Amendments:
Date:

Architectural Services by:
ONEDRAFTING
P O Box ~
Napier
Cell: 027 5431005
Email:
enquiries@onedrafting.co.nz

Issue:
CONSENT

Designed and Drawn:
Pam Oliver

Issue Date:
15/07/2022

Checked:
Tony Black

Plot Date:
15/07/2022
Plot Time: 11:08:02 AM

Scale: 1:100
Sheet Size: A3

Project #
21-025

Sheet #
7
of 21

WIND ZONE = HIGH
EXPOSURE ZONE = B
EARTHQUAKE ZONE = 3

ABA20220988
APPROVED - Site Copy
Hastings District Council
20/09/2022

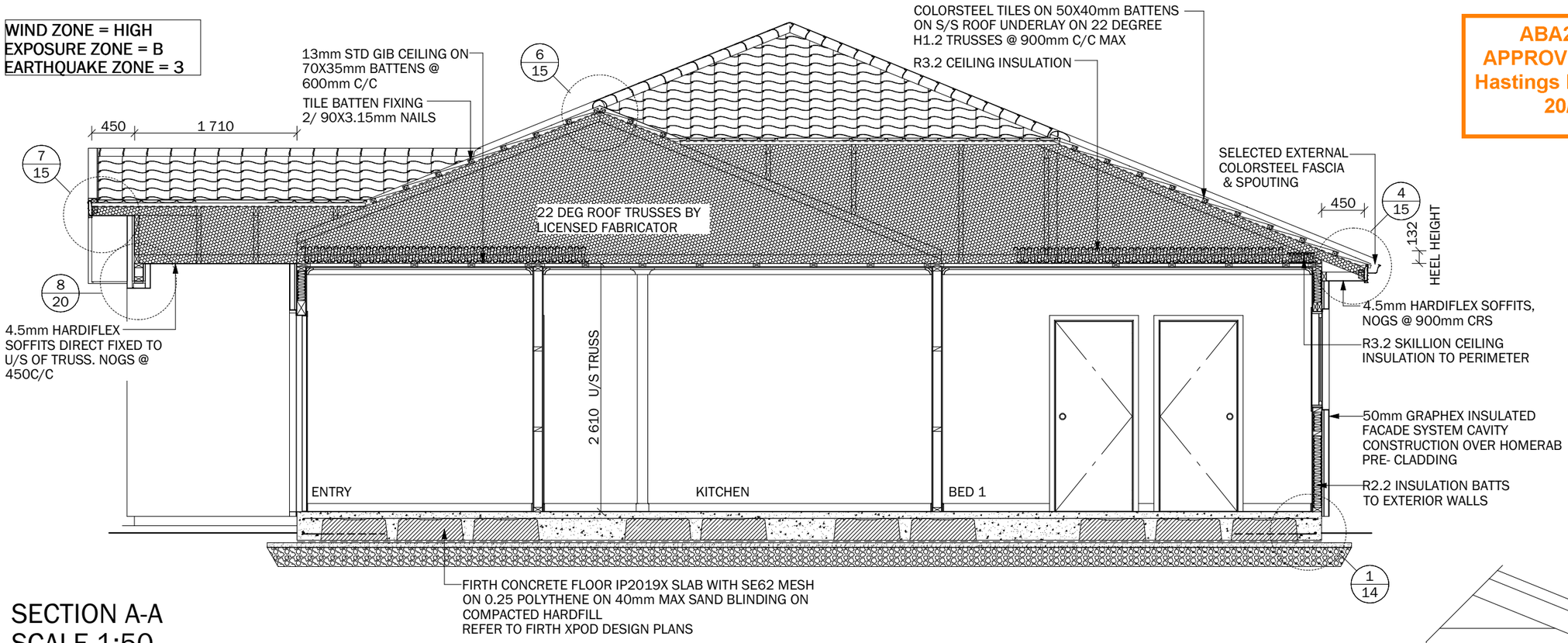

SECTION A-A
SCALE 1:50

NOTE:
- 90x45mm H1.2 FRAMING STUDS 600mm CRS FOR ALL INTERNAL WALLS.
- 10mm STANDARD GIBBOARD WALL LININGS
- AQUA GIB TO WET AREAS
- 13mm GIBBOARD TO CEILINGS

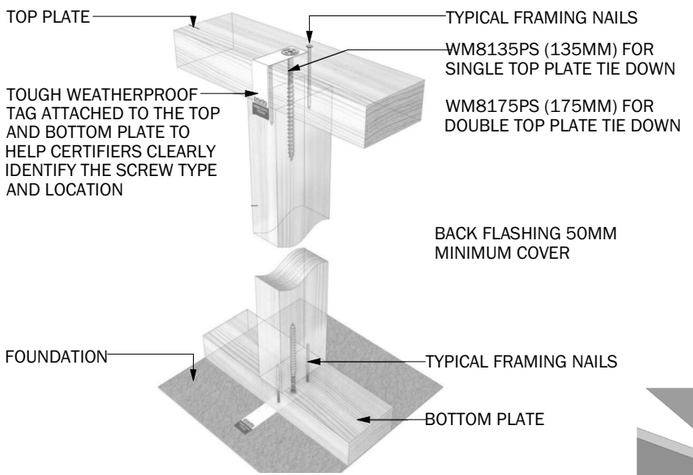

PRYDA STICK BUILT FRAMING ASSEMBLY

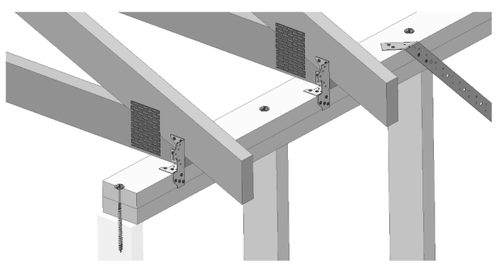

PRYDA SCREW USED WITH STANDARD MULTIGRIP

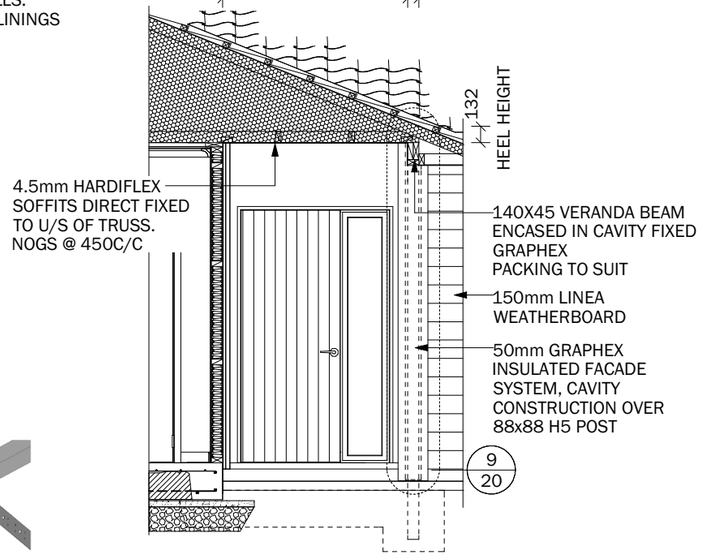

PART SECTION B-B
SCALE 1:50

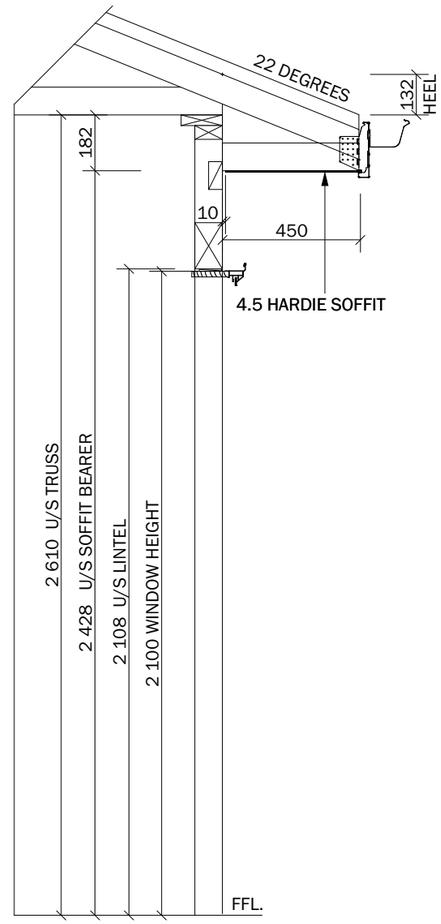

SCALE 1:20

SECTIONS

REDSHAW HOMES

PROPOSED NEW HOME FOR REDSHAW HOMES
LOT 33, 6 TE ARA MATIPOU
FRIMLEY, HASTINGS

LICENSED BUILDING PRACTITIONER - BUILDING CONFIDENCE - www.dbh.govt.nz

CHECK ALL MEASUREMENTS ON SITE

Amendments:
Date:

Architectural Services by:
ONEDRAFTING
P O Box ~
Napier
Cell: 027 5431005
Email:
enquiries@onedrafting.co.nz

Issue: CONSENT
Designed and Drawn: Pam Oliver
Issue Date: 15/07/2022
Checked: Tony Black
Plot Date: 15/07/2022
Plot Time: 11:08:02 AM
Scale: 1:50, 1:20
Sheet Size: A3
Project # 21-025
Sheet # 8 of 21

COLD WATER LINE — — — CW — — — CW — — —

HOT WATER LINE — — — HW — — — HW — — —

TEMPERED HOT WATER LINE — — — TW — — — —

HOSE TAP HT — — — CW — — — CW — — —

HOT WATER TEMPERATURES TO NZBC G12/AS1. REGARDLESS OF TEMPERATURE CONTROLS WHERE NECESSARY, STORAGE WATER HEATERS TO STORE WATER AT NOT LESS THAN 60°C. TO PREVENT THE GROWTH OF LEGIONELLA BACTERIA.

ABA20220988
APPROVED - Site Copy
Hastings District Council
20/09/2022

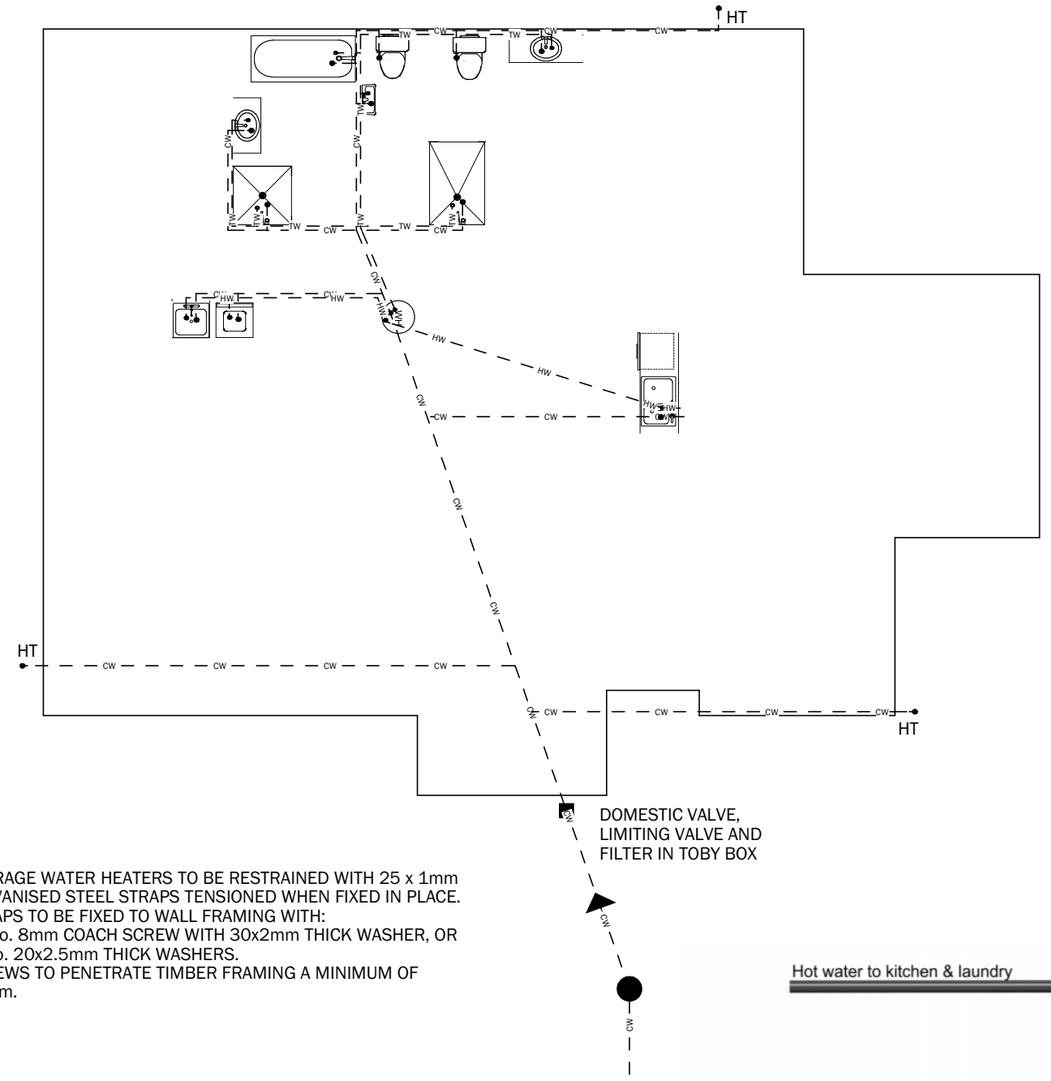

ACCEPTABLE MAXIMUM PIPE LENGTHS TO KITCHEN SINK

NOMINAL PIPE SIZE (mm)	10	15	20
LENGTH	25	12	7

-HOT AND COLD WATER RETICULATION TO COMPLY WITH NZBC G12/AS1

-HOT AND COLD SUPPLY TO TEMPERING VALVE & SHOWERS ALL 20mm POLYBUTYLENE MIN
-HOT AND COLD SUPPLY TO SINK, LAUNDRY AND BATH 15mm POLYBUTYLENE MIN
-HOT AND COLD SUPPLY TO ALL OTHER FIXTURES 10mm POLYBUTYLENE MIN
-HOSE TAP POSITIONS CONFIRMED BY OWNER
-25mm BLACK & BLUE PIPE FOR THE OFF STREET FEED.

PIPEWORK
IF PREFERRED - TEMPERED WATER FEED TO KITCHEN AND LAUNDRY WILL BE IN CONSULTATION WITH OWNER

POTABLE WATER
ACCEPTABLE SOLUTION G12/AS1 REQUIRES BACKFLOW PREVENTION TO BE PROVIDED WHERE IT IS POSSIBLE FOR WATER OR CONTAMINANTS TO BACKFLOW INTO A PIPED POTABLE WATER SUPPLY.
BACKFLOW PROTECTION SHALL BE ACHIEVED BY AN AIR GAP, WHICH MUST BE THE GREATER OF 25mm, OR TWICE THE DIAMETER OF THE SUPPLY PIPE, OR A BACKFLOW PREVENTION DEVICE.

HOT AND COLD WATER PIPES TO BE WRAPPED IN FLEXIBLE MATERIAL OR SLEEVED WHEN PENETRATING CONCRETE

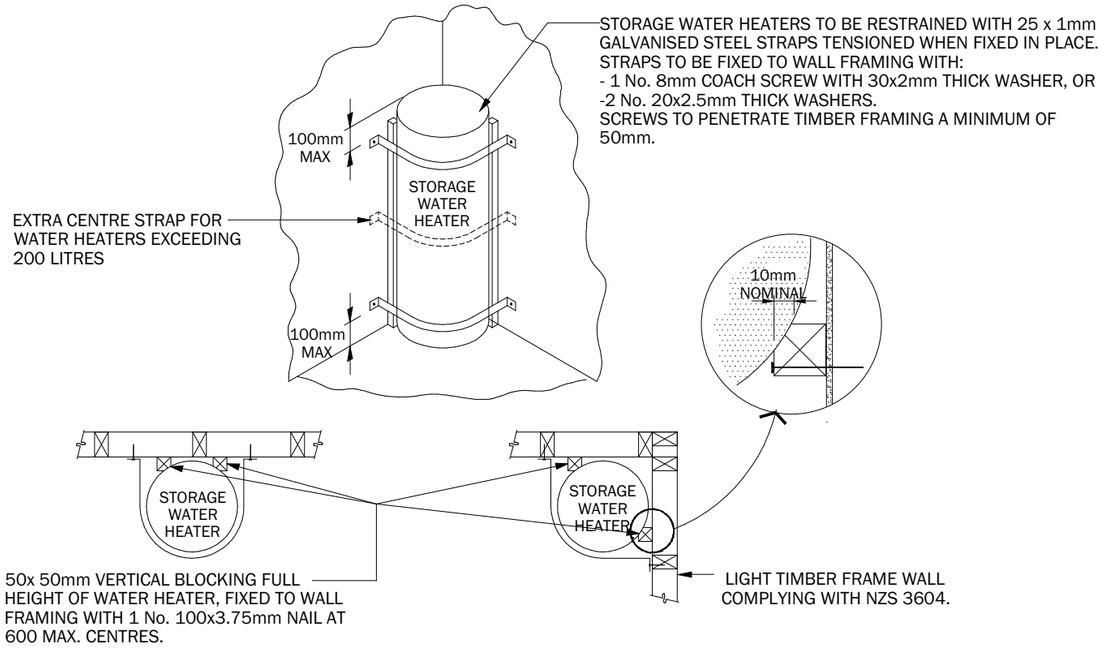

STORAGE WATER HEATERS TO BE RESTRAINED WITH 25 x 1mm GALVANISED STEEL STRAPS TENSIONED WHEN FIXED IN PLACE. STRAPS TO BE FIXED TO WALL FRAMING WITH:
- 1 No. 8mm COACH SCREW WITH 30x2mm THICK WASHER, OR
-2 No. 20x2.5mm THICK WASHERS.
SCREWS TO PENETRATE TIMBER FRAMING A MINIMUM OF 50mm.

SEISMIC RESTRAINT OF STORAGE WATER HEATERS 90-360 LITRES

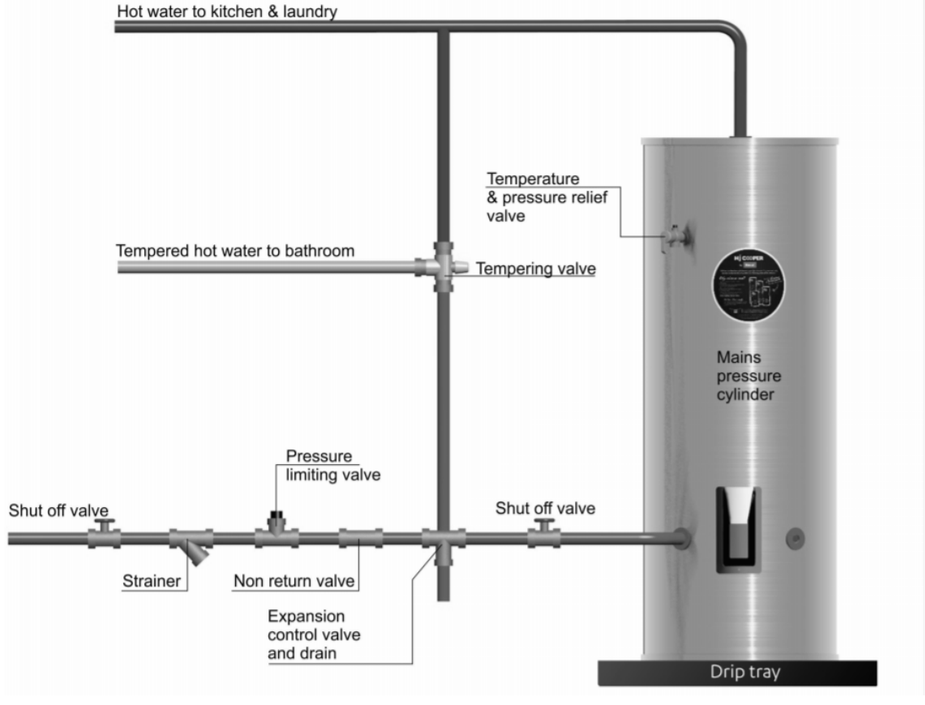

WATER RETICULATION PLAN

REDSHAW HOMES

PROPOSED NEW HOME FOR REDSHAW HOMES
LOT 33, 6 TE ARA MATIPOU FRIMLEY, HASTINGS

LICENSED BUILDING PRACTITIONER · BUILDING CONFIDENCE · www.dbh.govt.nz

CHECK ALL MEASUREMENTS ON SITE

Amendments:
Date:

Architectural Services by:
ONEDRAFTING
P O Box ~
Napier
Cell: 027 5431005
Email:
enquiries@onedrafting.co.nz

Issue: CONSENT
Designed and Drawn: Pam Oliver
Issue Date: 15/07/2022
Checked: Tony Black
Plot Date: 15/07/2022
Plot Time: 11:08:02 AM
Scale: 1:100
Sheet Size: A3
Project # 21-025
Sheet # 9 of 21

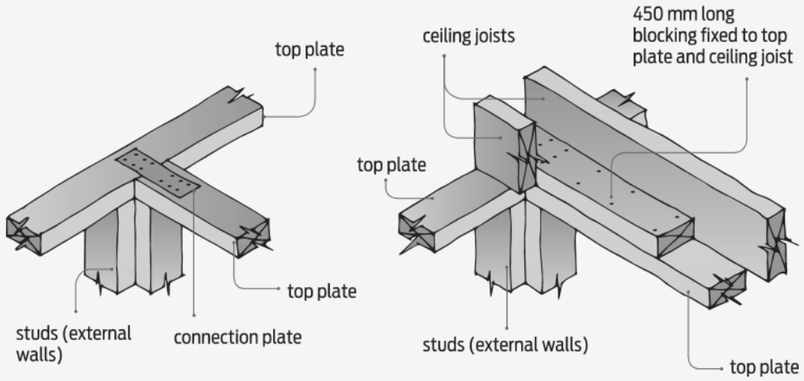

Capacities of nailed joints:
- Up to 3 kN: 3/100 × 3.75 mm nails per side.
- Up to 6 kN: 6/100 × 3.75 mm nails per side.

Notes:
Connection plate fixing capacity for each wall with:
- maximum 125 BUs: 6 kN to at least one external wall
- maximum 250 BUs: 6 kN to at least two external walls
- more than 250 BUs: 2.4 kN/100 BUs to at least two external walls.

ABA20220988
APPROVED - Site Copy
Hastings District Council
20/09/2022

CONNECTING TOP PLATES OF EXTERNAL WALLS AT RIGHT ANGLES TO OTHER WALLS CONTAINING BRACING

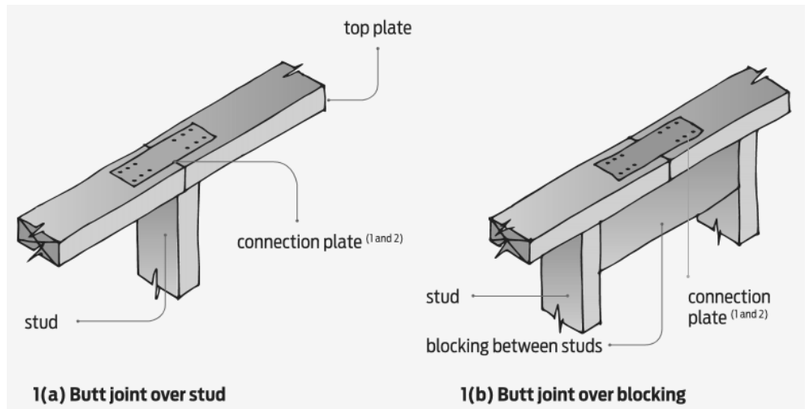

Notes:
1. Connection plate capacity = 3 kN, where bracing capacity < 100 BUs.
   Connection plate capacity = 6 kN, where bracing capacity > 100 BUs.
2. Connection plate not required when extra top plate is used and joints in plates are staggered.

CONNECTING TOP PLATES IN LINE IN WALLS CONTAINING BRACING

ISOLATED BRACE WALL
WHERE THE CEILING FRAMING IS PARALLEL TO THE WALL, A CONNECTING MEMBER CAN BE LAID DIRECTLY ABOVE THE WALL AND CONNECTED AT EACH END.
6/90 X 3.15MM NAILS FOR 6KN AS REQUIRED BY NZS 3604:2011 CLAUSE 8.7.3
WHERE CEILING FRAMING IS PERPENDICULAR TO THE BRACE WALL, IF THERE IS ENOUGH DEPTH WITHIN THE CEILING BATTENS BELOW THE FRAMING, AN EXTRA BATTEN MAY BE ABLE TO PROVIDE THE CONNECTION.
IF THERE ARE NO BATTENS OR THEY ARE TOO SHALLOW TO FIT A CONNECTING MEMBER, IT WILL HAVE TO BE LOCATED ABOVE THE FRAMING AND CONNECTED AT EACH END USING BLOCKING OR PACKERS.
THESE CONNECTORS WILL NEED TO BE FIXED IN PLACE BEFORE WALL OR CEILING LININGS ARE INSTALLED.
6/90 X 3.15MM NAILS FOR 6KN CONNECTOR TO TOP PLATE
NZS 3604:2011 GIVES REQUIRED CONNECTION DETAILS AT EACH END OF THE CONNECTOR.

ELEMENT	TYPE	LENGTH
A1	HPgn	0.6
A2	HPgn	0.6
A3	HPn	1.2
A4	HPn	1.6
B1	GS2-NOM	1.9
B2	GS2-NOM	3.6
B3	HPgn	0.6
B4	HPgn	0.4
C1	GS2-N	0.6
C2	GS2-NOM	3.4
C3	GS1-N	0.42
D1	HPgn	0.45
D2	HPgn	0.7
D3	HPgn	0.55
D4	HPgn	0.55
D5	HPgn	0.58
D6	HPgn	0.58

ELEMENT	TYPE	LENGTH
M1	HPn	1.2
M2	HPn	1.2
M3	HPn	1.2
N1	GS1-N	3.2
O1	GS1-N	2.0
O2	GS2-NOM	1.2
O3	HPn	1.2
P1	GS2-NOM	1.1
P2	GS2-NOM	1.1
P3	HPn	1.2
Q1	HPgn	0.8
Q2	HPgn	1.0
Q3	HPgn	0.5
R1	HPn	1.7

MANUFACTURER'S CODE
BL = GIB BRACELINE
GS = GIB
HP = HOMERAB

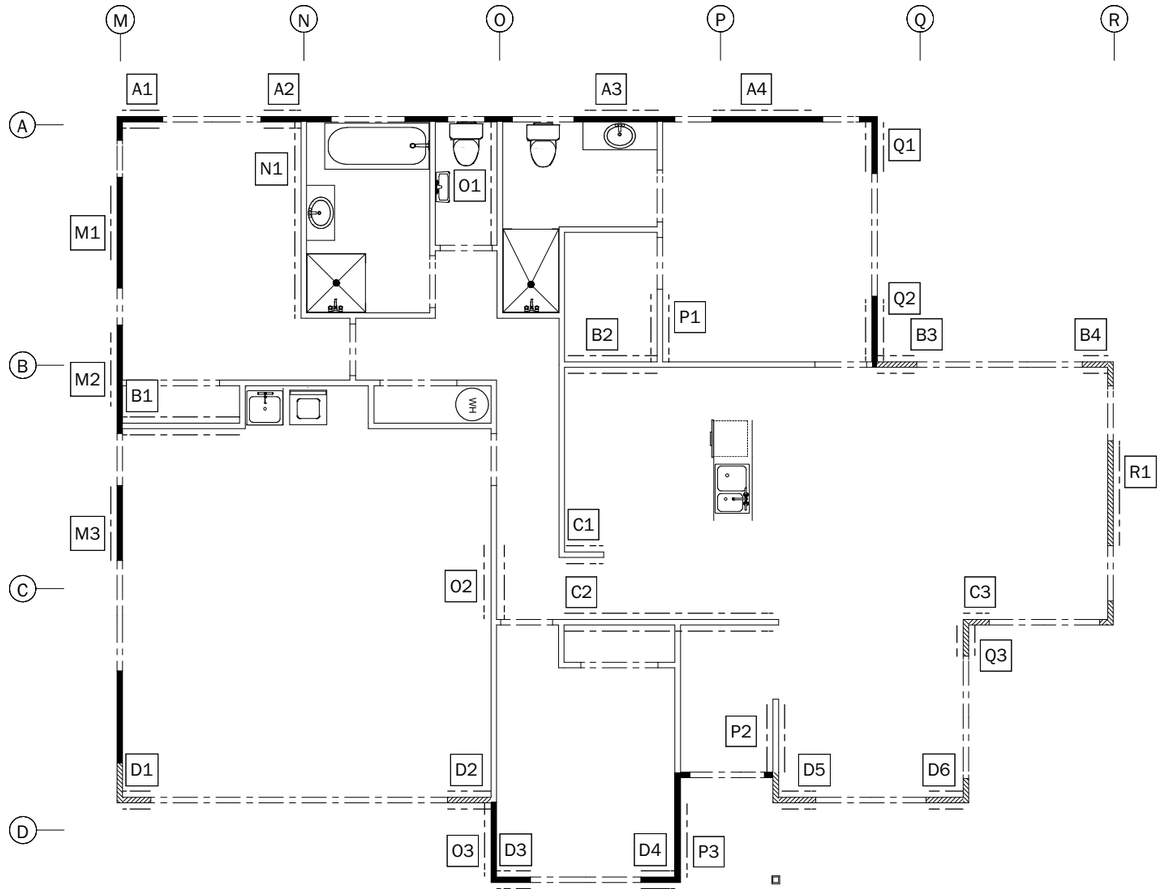

BRACING PLAN

REDSHAW HOMES

PROPOSED NEW HOME FOR REDSHAW HOMES
LOT 33, 6 TE ARA MATIPOU FRIMLEY, HASTINGS

LICENSED BUILDING PRACTITIONER · BUILDING CONFIDENCE · www.dbh.govt.nz

CHECK ALL MEASUREMENTS ON SITE

Amendments:
Date:

Architectural Services by:
ONEDRAFTING
P O Box ~
Napier
Cell: 027 5431005
Email:
enquiries@onedrafting.co.nz

Issue: CONSENT
Designed and Drawn: Pam Oliver
Issue Date: 15/07/2022
Checked: Tony Black
Plot Date: 15/07/2022
Plot Time: 11:08:03 AM
Scale: 1:100
Sheet Size: A3
Project # 21-025
Sheet # 10 of 21

ABA20220988
APPROVED - Site Copy
Hastings District Council
20/09/2022

25 X 1 GALV' ROOF STRAP BRACING
OVER TRUSSES. FIX EACH END WITH 6/
30 X 3.15 NAILS AND 1/3.15 NAIL AT
EACH TRUSS AFTER TENSIONING

ALL DOWNPIPES 80mm (85m² ROOF PLAN AREA MAX.)=
5027mm² (REQ'D 9619mm² /3)
SELECTED SPOUTING = 135mm ROUND (CAPACITY 6300mm²)
CATCHMENT AREA OF ROOF = 53m² MAX

DOWNPIPES 80mm uPVC

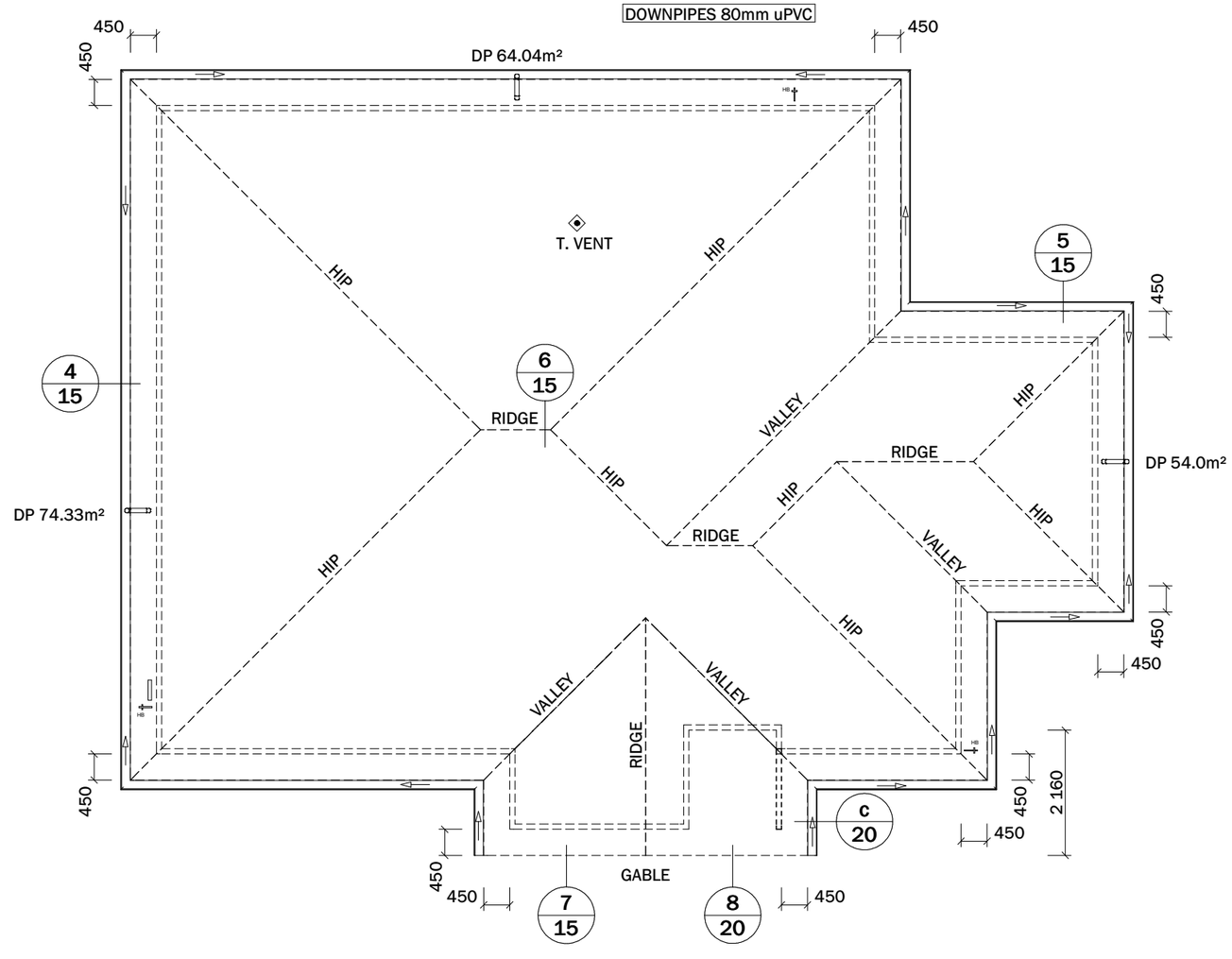

COLORSTEEL TILE ROOF
22 DEGREES - 192.37m²

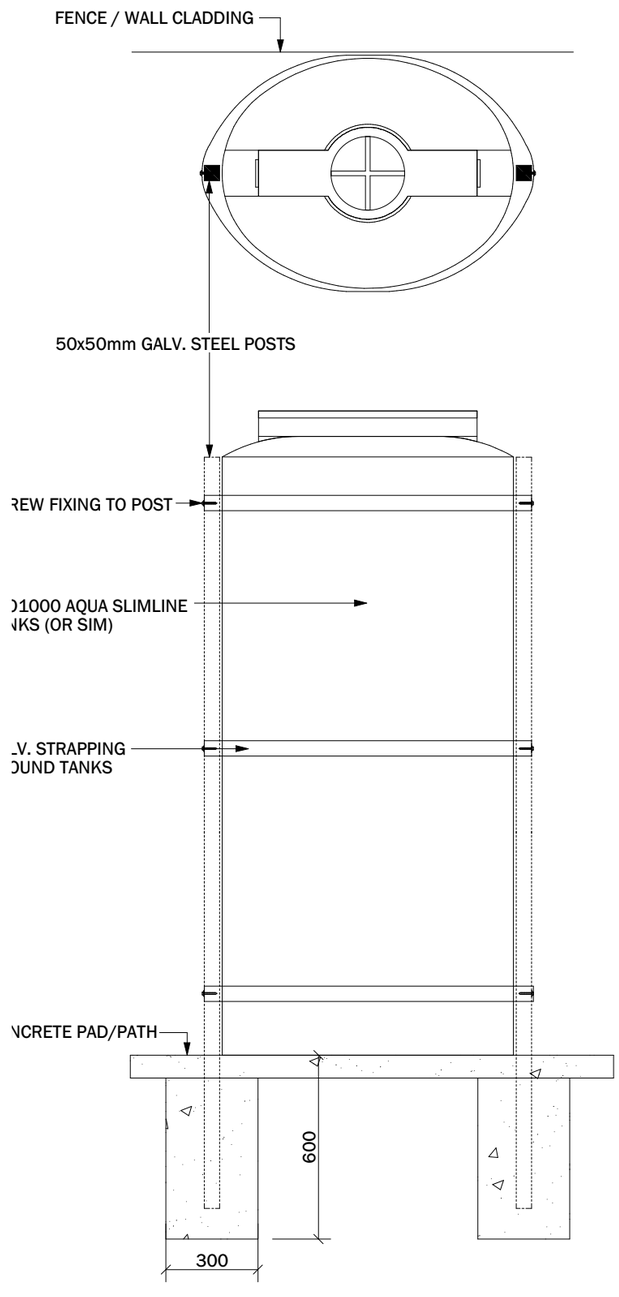

SEISMIC RESTRAINT OF WATER TANK
SCALE 1:20

ROOF PLAN

REDSHAW HOMES

PROPOSED NEW HOME FOR
REDSHAW HOMES
LOT 33, 6 TE ARA MATIPOU
FRIMLEY, HASTINGS

LICENSED BUILDING PRACTITIONER
BUILDING CONFIDENCE
www.dbh.govt.nz

CHECK ALL
MEASUREMENTS
ON SITE

Amendments:
Date:

Architectural Services by:
ONEDRAFTING

P O Box ~
Napier
Cell: 027 5431005
Email:
enquiries@onedrafting.co.nz

Issue:
CONSENT

Designed and Drawn:
Pam Oliver

Issue Date:
15/09/2022

Checked:
Tony Black

Plot Date:
15/09/2022
Plot Time: 10:17:36 AM

Scale: 1:100
Sheet Size: A3

Project #
21-025

Sheet #
11
of 21

ABA20220988
APPROVED - Site Copy
Hastings District Council
20/09/2022

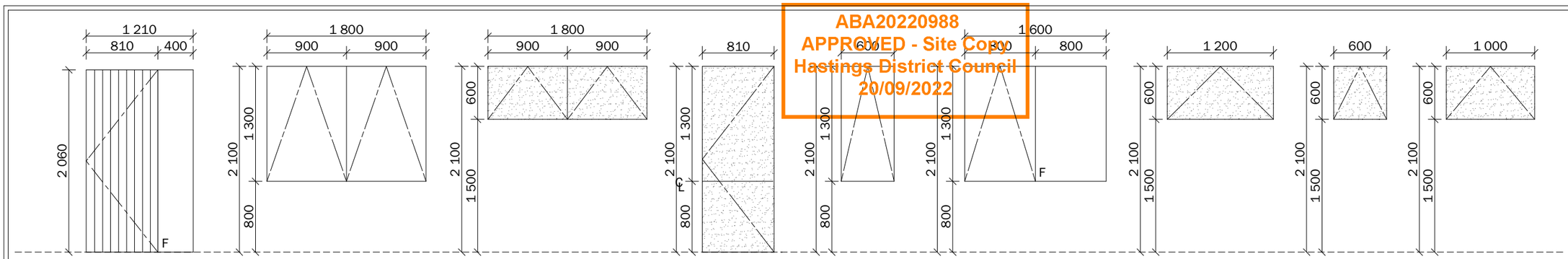

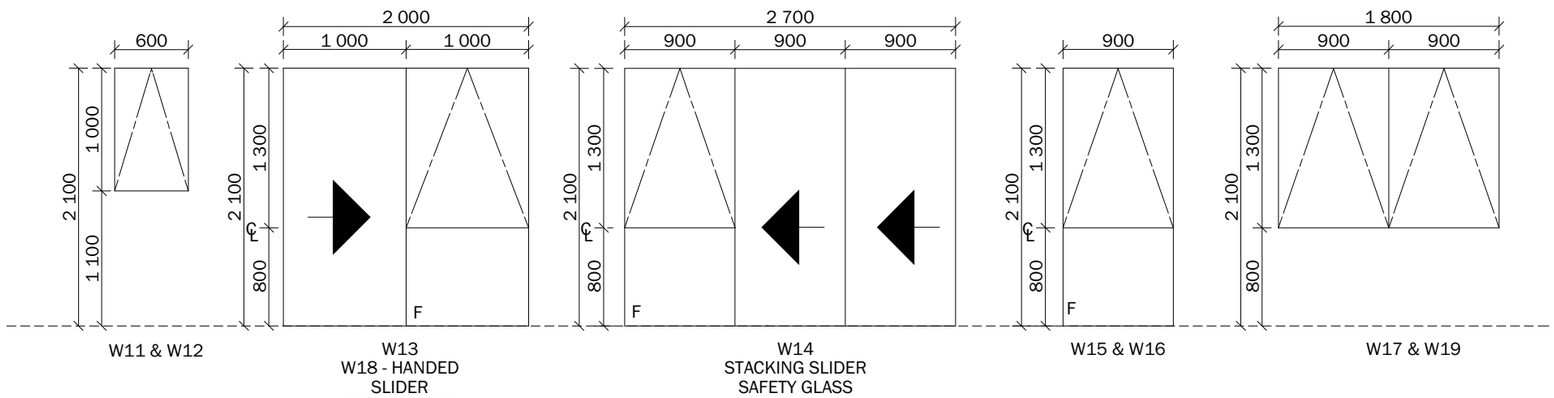

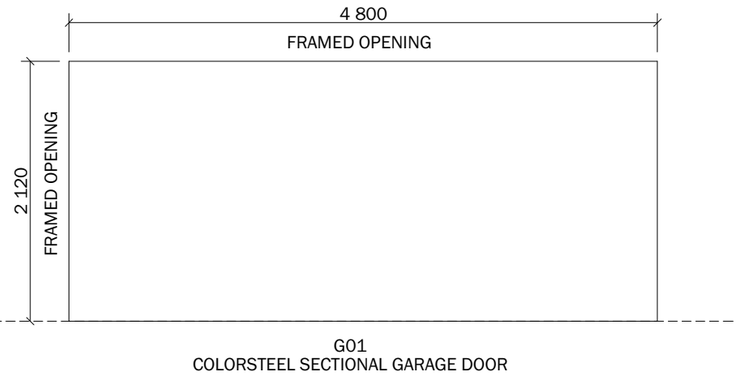

GIVEN DIMENSIONS ARE BOX SIZE. ADD 15mm FOR ROUGH OPENING SIZE.

JOINERY NOTES

1. ALL UNITS VIEWED FROM THE OUTSIDE
2. GENERALLY DOUBLE GLAZED ALUMINIUM WITH DOUBLE TONGUE LATCHES IN 19mm P.P. H3 FRAMES WITH SELECTED ARCHITRAVES
3. DOUBLE GLAZING / GREY TINT GLASS, UNLESS SHOWN OTHERWISE
4. W1. OWNER SELECTED DOOR + SIDELIGHT HUNG IN ALUMINIUM FRAME
5. GRADE A SAFETY GLASS TO UNITS AS NOTED - ALL GLAZING LESS THAN 2000mm ABOVE THE ABUTTING FINISHED FLOOR LEVEL IN BATHROOMS
6. SINGLE GLAZING TO UNITS W03 & W04
7. SILL SUPPORT BARS TO WINDOWS OVER 600mm WIDE
8. OBSCURE GLASS TO W03, W07, W08 & W09
9. ON SITE MEASURE PRIOR TO CONSTRUCTION
10. PERFORMANCE OF WINDOWS TO NZS 4211, GLAZING TO NZS 4223.3
11. ALL HINGED SINGLE GLAZED DOOR GLAZING BETWEEN 800mm AND 1000mm OF FFL WITH AN AREA GREATER THAN 0.5m² TO BE GRADE A SAFETY GLASS
    ALL HINGED IGU DOOR OR SIDE PANEL GLAZING BETWEEN 800mm AND 1000mm

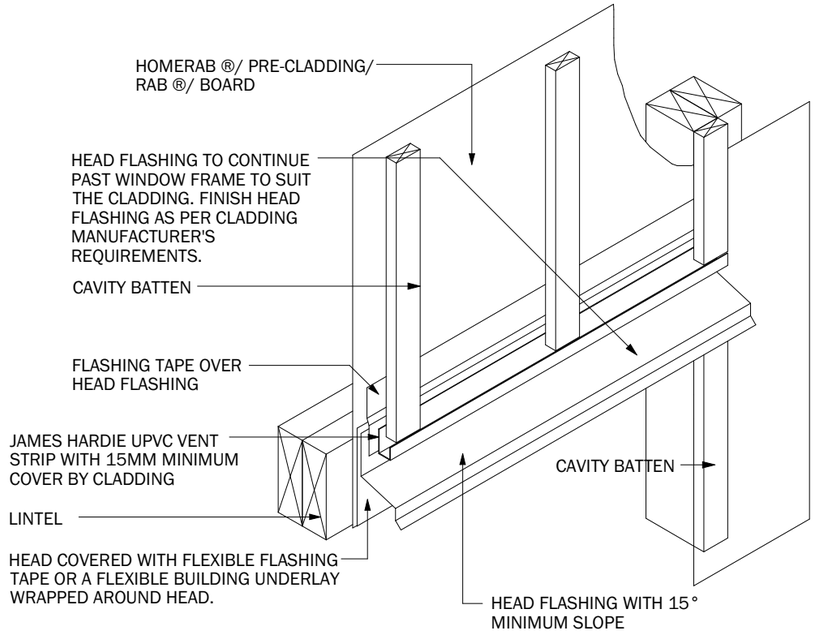

CAVITY FIXED WINDOW AND DOOR HEAD

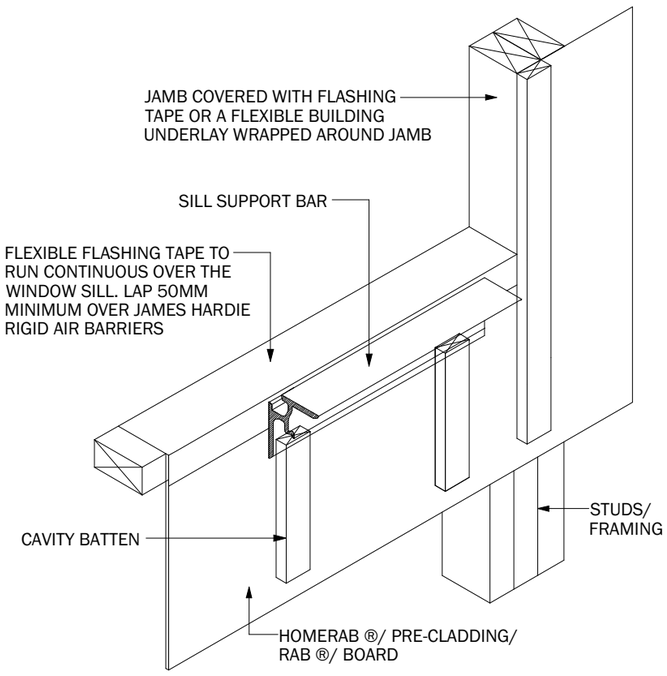

CAVITY FIXED WINDOW AND DOOR SILL

JOINERY SCHEDULE

REDSHAW HOMES

PROPOSED NEW HOME FOR
REDSHAW HOMES
LOT 33, 6 TE ARA MATIPOU
FRIMLEY, HASTINGS

LICENSED BUILDING PRACTITIONER - BUILDING CONFIDENCE - www.dbh.govt.nz

CHECK ALL MEASUREMENTS ON SITE

Amendments:
Date:

Architectural Services by:
ONEDRAFTING
P O Box ~
Napier
Cell: 027 5431005
Email:
enquiries@onedrafting.co.nz

Issue: CONSENT
Designed and Drawn: Pam Oliver
Issue Date: 15/07/2022
Checked: Tony Black
Plot Date: 15/07/2022
Plot Time: 11:08:03 AM
Scale: 1:50, 1:10
Sheet Size: A3
Project # 21-025
Sheet # 12 of 21

ABA20220988
APPROVED - Site Copy
Hastings District Council
20/09/2022

LEGEND

	TILT LED DOWNLIGHT	0
	LED DOWNLIGHT	39
E	EXTRACT FAN / LIGHT	2
	3 BULB HOLLYWOOD	2
	BULKHEAD LIGHTS	0
3 WAY	3 WAY SWITCHES	1
2 WAY	2 WAY SWITCHES	2
	SINGLE OUTLET	8
	DOUBLE OUTLET	19
TV	TV	2
PH	PH	2
G	GARAGE DOOR POINT	1
HTR	HEATED TOWEL RAIL	2
	MOVEMENT SENSOR	1
	FLUORESCENT LIGHT	2
	DOOR BELL	1
	NETWORK CONNECTION	0
	PENDANT LIGHT	0
	EXT. WALL LIGHT	0
	INT. WALL LIGHT	0
SS	SAFETY SOCKET	0
	CEILING BULKHEAD LIGHT	0
	LED LIGHTING	0

ALLOW FOR ALL KITCHEN FIXTURES
-REFER TO SEPERATE KITCHEN DESIGN LAYOUT

ALL DOWN LIGHTS TO BE LED IC-RATED =
ABUTTED AND COVERED, & INSTALLED TO
LED DOWNLIGHT REGULATIONS

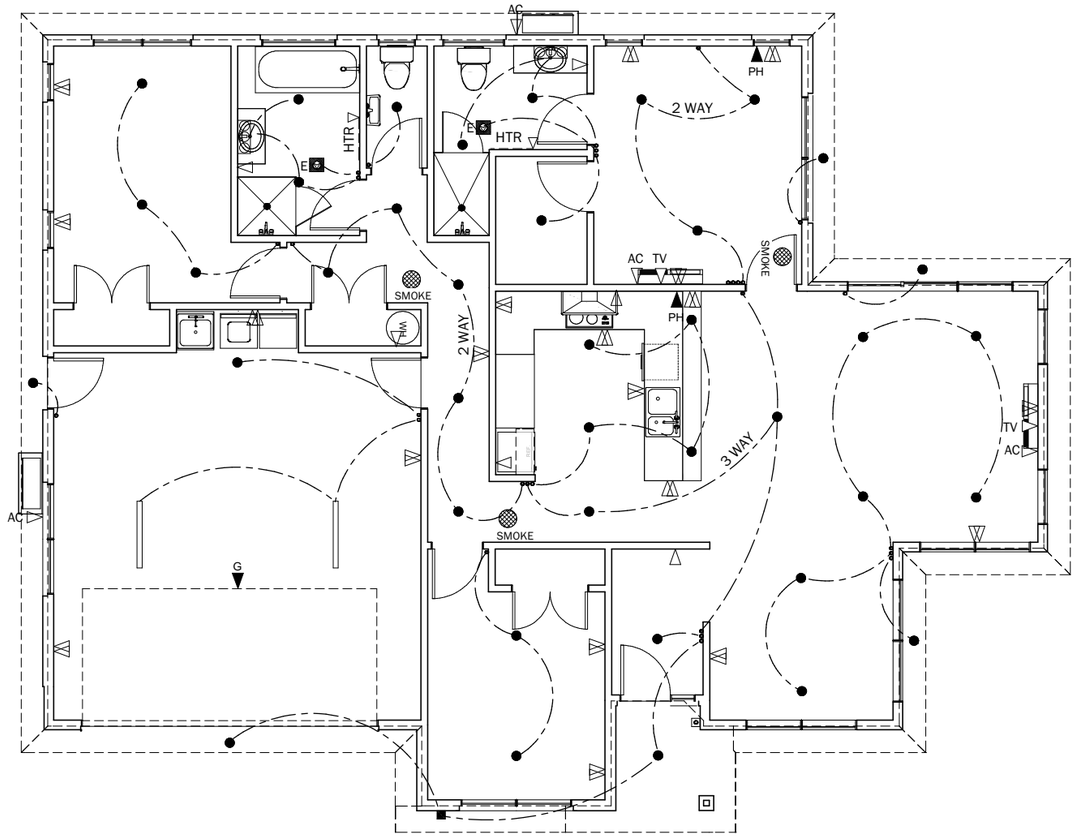

SMOKE DENOTED SMOKE ALARM FITTED WITH HUSH AND TEST FACILITIES COMFORMING WITH NZBC F7/AS1. LOCATION IN ACCORDANCE WITH NZS 4514.
SOUND PRESSURE LEVEL OF SYSTEMS SHALL BE NOT LESS THAN 75dBA WHEN MEASURED AT THE SLEEPING POSITION

VENTILATION REQUIREMENTS TO NZBC G4:
- 50 L/S FOR COOKTOPS
- 25 L/S FOR SHOWERS AND BATHS
- 20 L/S FOR LAUNDRIES
- 25 L/S FOR TOILETS

VENTILATION EXTRACT MANROSE MODEL (OR SIMILAR)
DRYER REAR VENT THRU WALL XP150 (OPTIONAL)
BATHROOMS IN-LINE FAN0085
KITCHEN CANOPY WALL/CEILING 150mm DCT2323

FOR GENERAL LIGHTING IN THE HOME LED RECESSED OR LED SURFACE MOUNTED LIGHTS
A GUIDE TO THE AMOUNT OF LIGHT PER SQUARE METER THAT IS REQUIRED IN THE HOME IS :
HALLWAYS 70 TO 100 LUX
KITCHEN 150 TO 200 LUX AND 300 TO 400 LUX ON BENCH TOPS
BATHROOM/LAUNDRY 230 TO 300 LUX
LOUNGE 200 LUX 300 TO 400 LUX FOR READING
BEDROOM 200 LUX 300 TO 400 LUX FOR READING

ONE LUX (LX) IS EQUAL TO ONE LUMEN PER SQUARE METER. NZBC G8 MIN. REQUIREMENTS 20 LUX AT FLOOR LEVEL.

ELECTRICAL PLAN

REDSHAW HOMES

PROPOSED NEW HOME FOR
REDSHAW HOMES
LOT 33, 6 TE ARA MATIPOU
FRIMLEY, HASTINGS

LICENSED BUILDING PRACTITIONER · BUILDING CONFIDENCE · www.dbh.govt.nz

CHECK ALL MEASUREMENTS ON SITE

Amendments:
Date:

Architectural Services by:
ONEDRAFTING
P O Box ~
Napier
Cell: 027 5431005
Email:
enquiries@onedrafting.co.nz

Issue: CONSENT
Designed and Drawn: Pam Oliver
Issue Date: 15/07/2022
Checked: Tony Black
Plot Date: 15/07/2022
Plot Time: 11:08:03 AM
Scale: 1:100
Sheet Size: A3
Project # 21-025
Sheet # 13 of 21

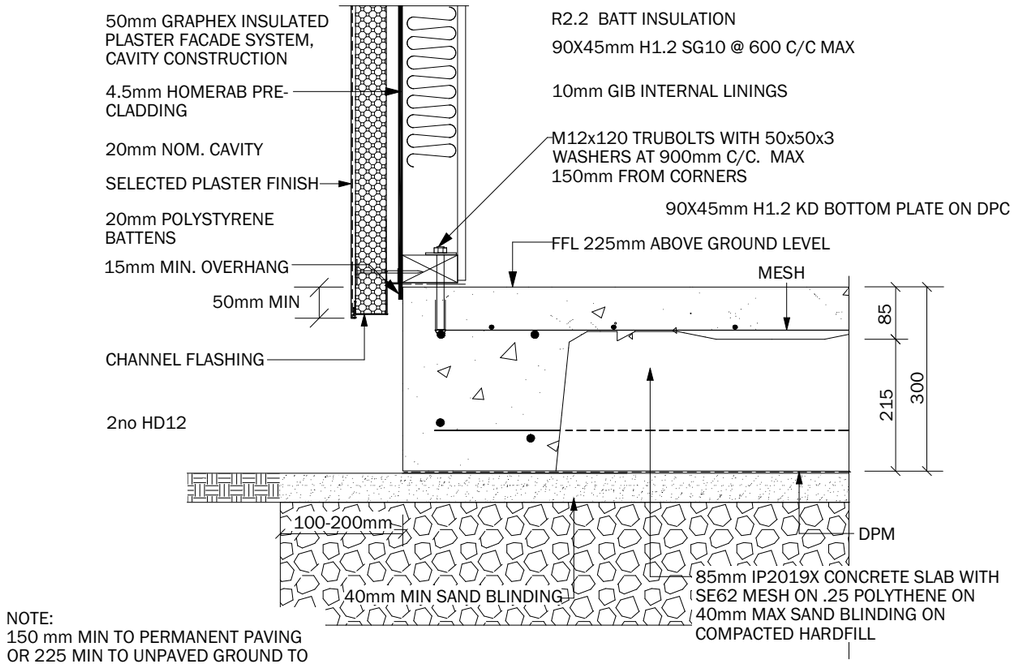

NOTE:
150 mm MIN TO PERMANENT PAVING
OR 225 MIN TO UNPAVED GROUND TO
CLAUSE 9.1.3 OF E2/AS1

1/7 RIBRAFT XPOD FOOTING DETAIL - GRAPHEX PLASTER
1:10

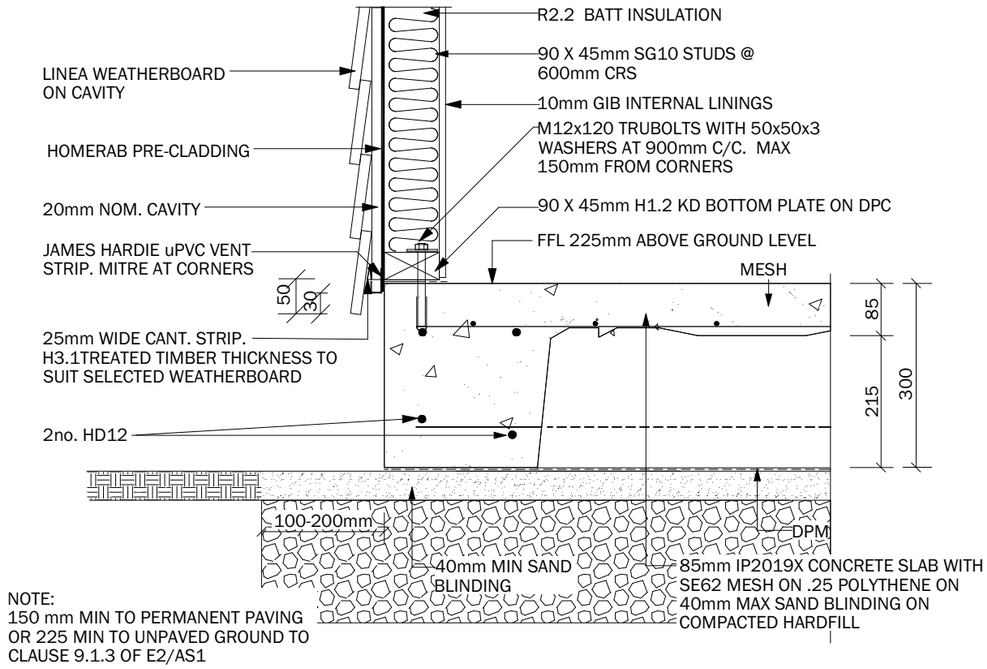

NOTE:
150 mm MIN TO PERMANENT PAVING
OR 225 MIN TO UNPAVED GROUND TO
CLAUSE 9.1.3 OF E2/AS1

2/7 RIBRAFT XPOD FOOTING DETAIL - LINEA WB
1:10

ABA20220988
APPROVED - Site Copy
Hastings District Council
20/09/2022

NOTE:
FIRTH CONCRETE MIX IP2519X SLAB WITH SE62 MESH ON 0.25 POLYTHENE ON 40mm MAX SAND BLINDING ON COMPACTED AP40 OR AP65 ENGINEERED FILL 100mm - 200mm DEPTH

REFER TO RIBRAFT XPOD ENGINEERING PLANS AND DETAILS

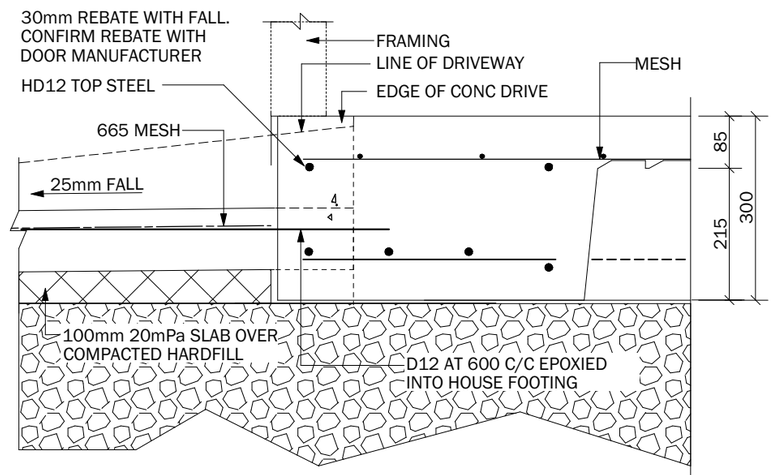

3/7 GARAGE ENTRY / EXT. PAVING JUNCTION
SCALE 1:10

FOUNDATION DETAILS

REDSHAW HOMES

PROPOSED NEW HOME FOR REDSHAW HOMES
LOT 33, 6 TE ARA MATIPOU
FRIMLEY, HASTINGS

LICENSED BUILDING PRACTITIONER - BUILDING CONFIDENCE - www.dbh.govt.nz

CHECK ALL MEASUREMENTS ON SITE

Amendments:
Date:

Architectural Services by:
ONEDRAFTING
P O Box ~
Napier
Cell: 027 5431005
Email:
enquiries@onedrafting.co.nz

Issue: CONSENT
Designed and Drawn: Pam Oliver
Issue Date: 15/07/2022
Checked: Tony Black
Plot Date: 15/07/2022
Plot Time: 11:08:03 AM
Scale: 1:10
Sheet Size: A3
Project # 21-025
Sheet # 14 of 21

ABA20220988
APPROVED - Site Copy
Hastings District Council
20/09/2022

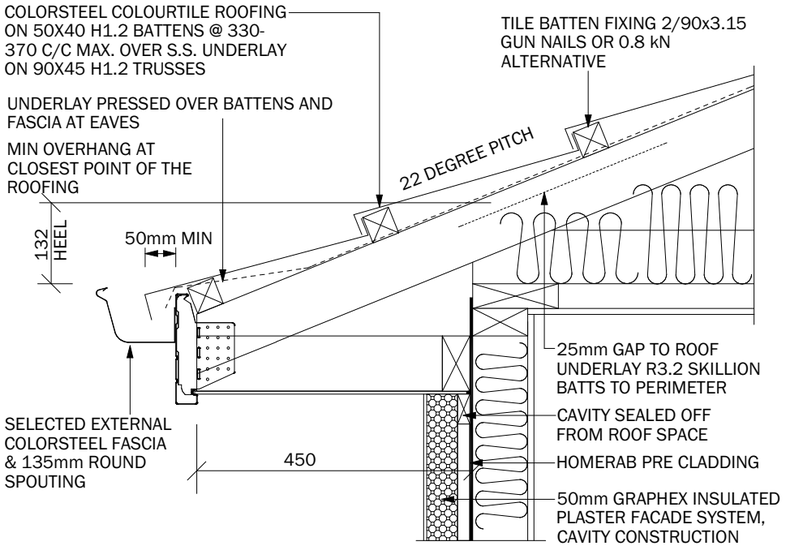

4/11 SOFFIT DETAIL - EIFS
SCALE 1:10

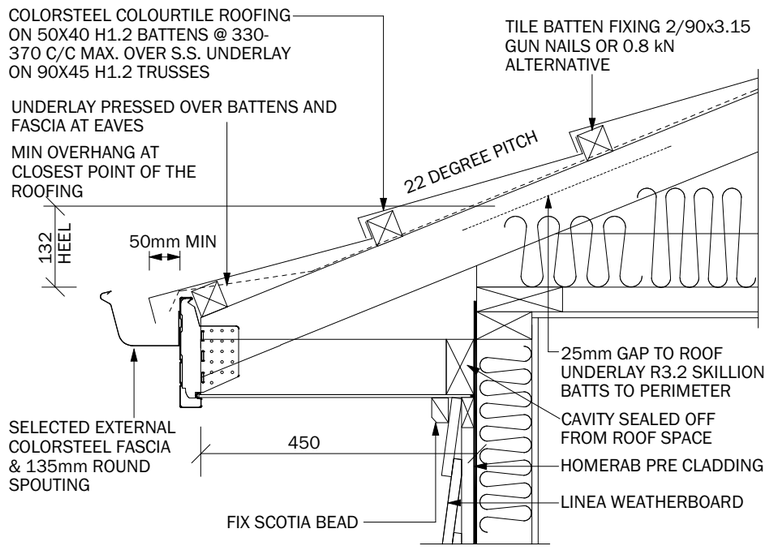

5/11 SOFFIT DETAIL- LINEA
SCALE 1:10

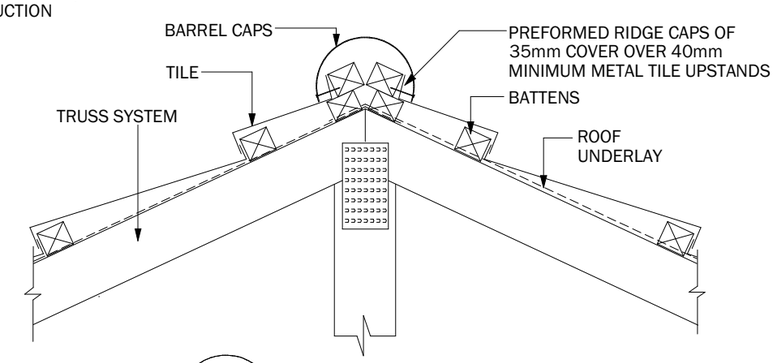

6/11 RIDGE DETAIL
SCALE 1:10

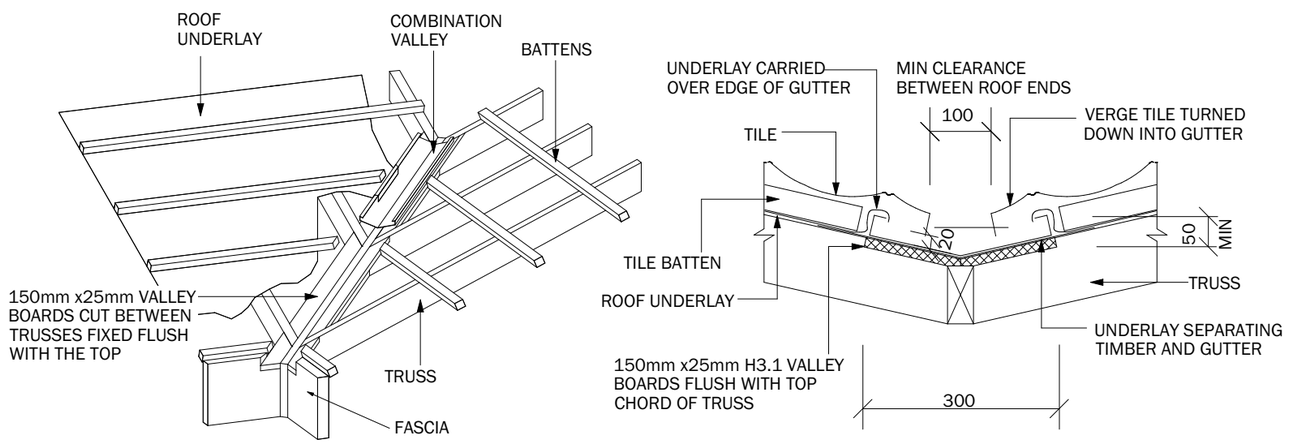

ROOF VALLEY DETAILS
SCALE 1:10

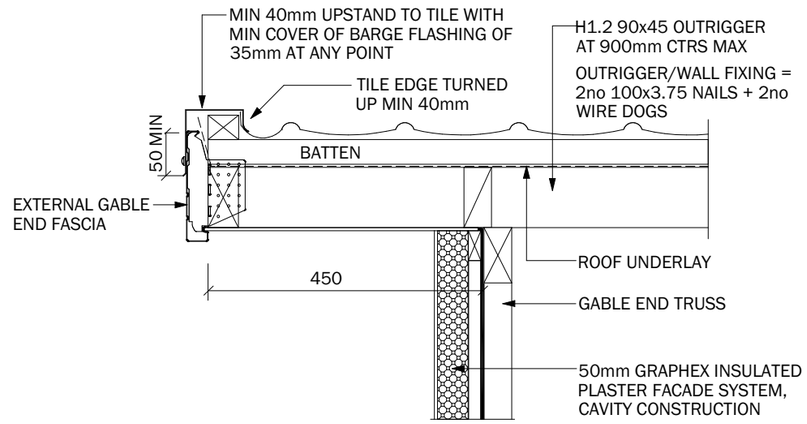

7/11 GABLE END BARGE FLASHING
1:10

ROOF DETAILS

REDSHAW HOMES

PROPOSED NEW HOME FOR REDSHAW HOMES
LOT 33, 6 TE ARA MATIPOU
FRIMLEY, HASTINGS

LICENSED BUILDING PRACTITIONER · BUILDING CONFIDENCE · www.dbh.govt.nz

CHECK ALL MEASUREMENTS ON SITE

Amendments:
Date:

Architectural Services by:
ONEDRAFTING
P O Box ~
Napier
Cell: 027 5431005
Email:
enquiries@onedrafting.co.nz

Issue: CONSENT
Designed and Drawn: Pam Oliver
Issue Date: 15/07/2022
Checked: Tony Black
Plot Date: 15/07/2022
Plot Time: 11:08:03 AM
Scale: 1:10
Sheet Size: A3
Project # 21-025
Sheet # 15 of 21

NOTE
1. DRAIN HOLES IN CAVITY CLOSURE ARE SUFFICIENT TO ACHIEVE VENTILATION OPENINGS OF 1000 mm² PER LINEAL METRE

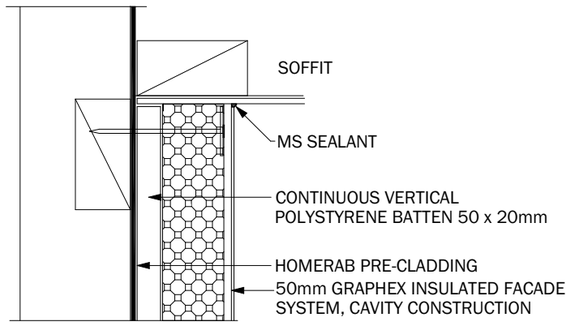

GRAPHEX BOARD - SOFFIT FLAT
SCALE 1:5

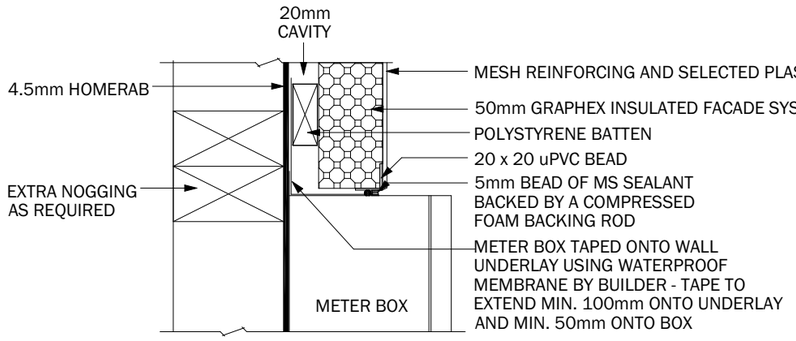

JAMB

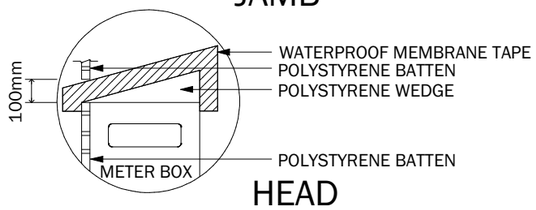

HEAD

NOTE: A WEDGE OF GRAPHEX BOARD WITH A 15° SLOPE MUST BE PLACED ON TOP OF THE METER BOX. IT MUST BE TAPED ONTO THE WALL UNDERLAY USING A WATERPROOFING MEMBRANE TO SHED WATER TO THE OUTSIDE EDGE. CARE MUST BE TAKEN TO ENSURE THE TIP OF THE WEDGE IS NOT BLOCKED BY A VERTICAL BATTEN

METER BOX - HEAD AND JAMB
SCALE 1:5

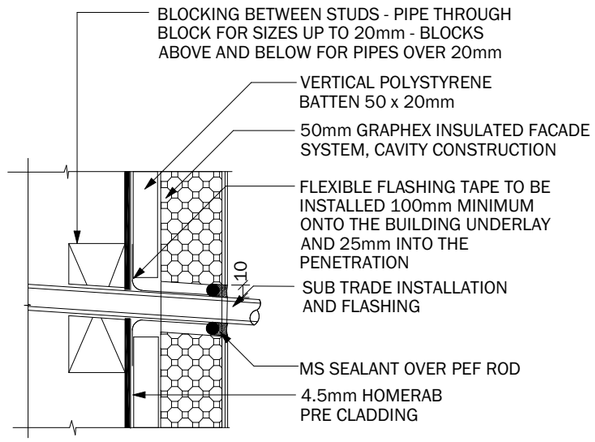

WHERE CABLES PENETRATE CLADDING, A SLEEVE OR CONDUIT SHALL BE PROVIDED AND SEALED INTO THE PLASTER. ALL WIRES THAT PASS THROUGH A CONDUIT SHALL BE SEALED INTO POSITION INSIDE THE CONDUIT

WHERE POSSIBLE PROVIDE OUTWARDS FALL TO PIPEWORK FOR WATER RUN-OFF

PIPE PENETRATION THROUGH GRAPHEX SYSTEM
SCALE 1:5

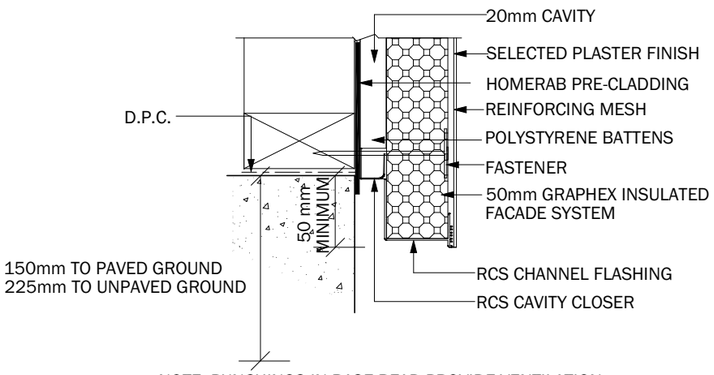

NOTE: PUNCHINGS IN BASE BEAD PROVIDE VENTILATION OPENINGS OF 1000mm2 PER LINEAL METRE.

CONCRETE SLAB FLOOR
SCALE 1:5

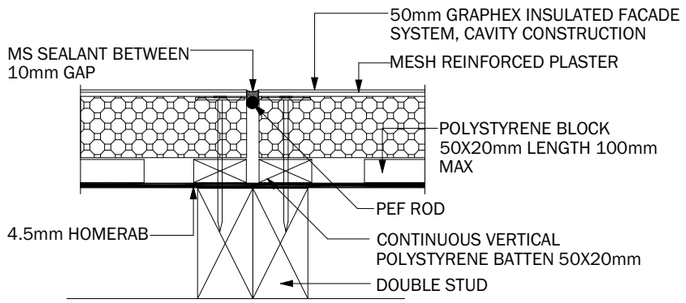

NOTE: MESH, PLASTER AND TOPCOAT MUST STOP AT EXPANSION JOINT

FOR SUGGESTED CONTROL JOINT SPACINGS LOCATIONS REFER TO RCS TRADESPEC™ DOCUMENT 1.4

VERTICAL CONTROL JOINT
SCALE 1:5

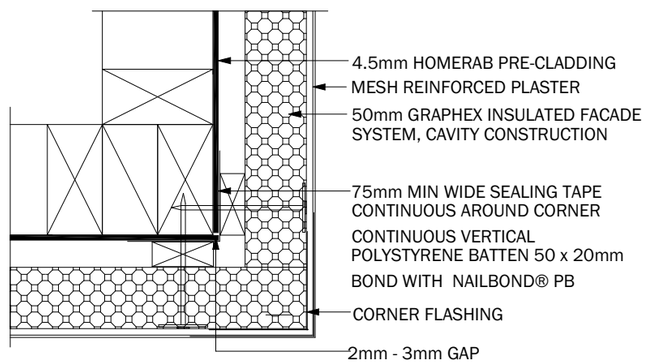

GRAPHEX BOARD EXTERNAL CORNER
SCALE 1:5

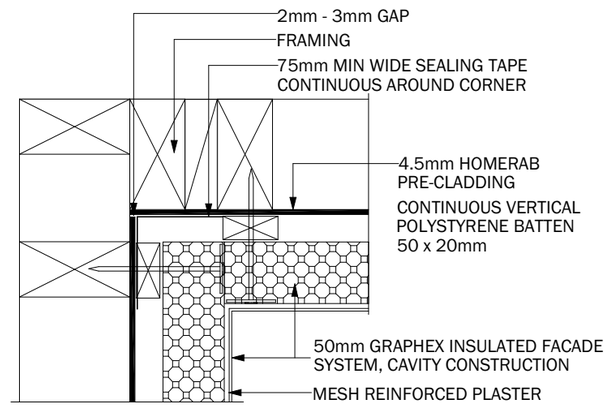

MESH TO BE WRAPPED CONTINUOUSLY AROUND THE INTERNAL CORNER, IF THERE IS A BREAK IN THE MESH THEN AN ADDITIONAL LAYER OF STICKY MESH MUST BE USED

GRAPHEX BOARD INTERNAL CORNER
SCALE 1:5

CLADDING DETAILS

ABA20220988
APPROVED - Site Copy
Hastings District Council
20/09/2022

REDSHAW HOMES

PROPOSED NEW HOME FOR REDSHAW HOMES
LOT 33, 6 TE ARA MATIPOU
FRIMLEY, HASTINGS

LICENSED BUILDING PRACTITIONER - BUILDING CONFIDENCE - www.dbh.govt.nz

CHECK ALL MEASUREMENTS ON SITE

Amendments:
Date:

Architectural Services by:
ONEDRAFTING
P O Box ~
Napier
Cell: 027 5431005
Email:
enquiries@onedrafting.co.nz

Issue: CONSENT
Designed and Drawn: Pam Oliver
Issue Date: 15/07/2022
Checked: Tony Black
Plot Date: 15/07/2022
Plot Time: 11:08:03 AM
Scale: 1:5
Sheet Size: A3
Project # 21-025
Sheet # 16 of 21

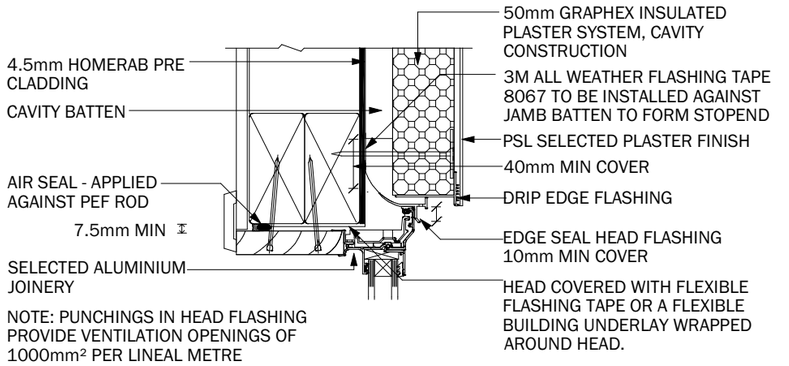

NOTE: PUNCHINGS IN HEAD FLASHING PROVIDE VENTILATION OPENINGS OF 1000mm² PER LINEAL METRE

EIFS WINDOW OR DOOR HEAD
SCALE 1:5

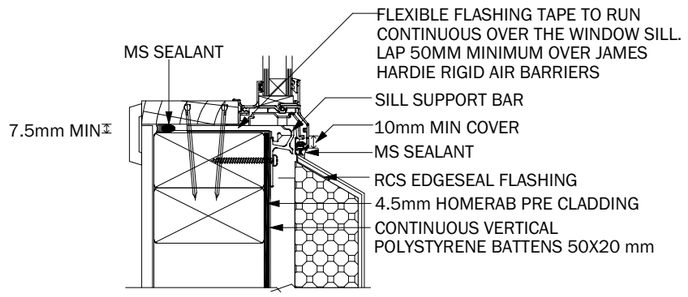

EIFS WINDOW SILL
SCALE 1:5

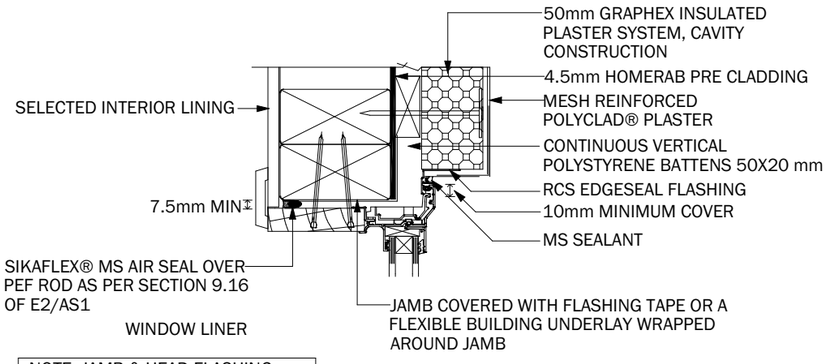

NOTE: JAMB & HEAD FLASHING MUST BE SEALED OR PVC WELDED WHERE THEY INTERSECT

EIFS WINDOW OR DOOR JAMB
SCALE 1:5

GENERAL NOTES FOR MATERAILS SELECTION
1. FLASHING MATERIALS MUST BE BASED ON ENVIRONMENTAL EXPOSURE, REFERR TO NZS 3604 & TABLE 20 OF NZBC 'E2/AS1'.
2. BUILDING WRAP MUST COMPLY WITH ACCEPTABLE SOLUTION 'E2/AS1' & NZS 3604.
3. FLASHING TAPE MUST HAVE PROVEN COMPATIBILITY WITH THE SELECTED BUILDING WRAP & OTHER MATERIALS WITH WHICH IT COMES INTO CONTACT AS PER TABLE 21 OF 'E2/AS1.
4. SILL TRAY IF REQUIRED TO BE SUPPLIED AND INSTALLED BY OTHERS
5. WINDOW INSTALLATION MUST COMPLY WITH WANZ WIS INCLUDING USE OF FLEXIBLE FLASHING TAPES.

REFER TO THE MANUFACTURER OR SUPPLIER FOR TECHNICAL INFORMATION FOR THESE MATERIALS.

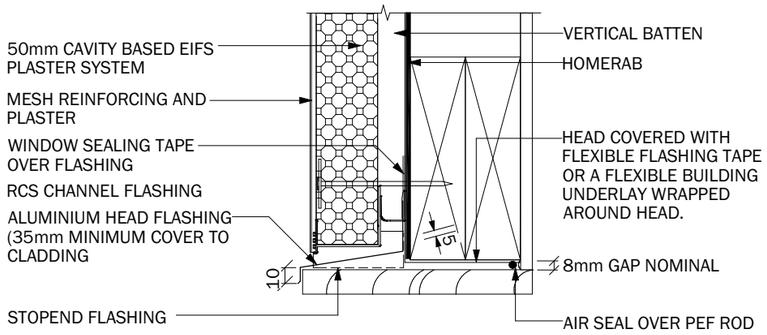

METAL HEAD FLASHING TO EXTEND PAST THE LINE OF THE ALUMINIUM JAMB BY 5mm AND BE TURNED UP AT THE ENDS BY A MINIMUM 20mm, THIS IS AN ALTERNATIVE TO USING A HEAD SOAKER.
HEAD FLASHING MUST BE TAPED TO THE BUILDING UNDERLAY BY THE MAIN CONTRACTOR/WINDOW INSTALLER 5mm CLEARANCE MUST BE MAINTAINED BETWEEN THE STARTER STRIP AND THE HEAD FLASHING.
HEAD FLASHING TO HAVE A MINIMUM 15° FALL HEAD FLASHING TO EXTEND BAST THE JAMB BY 10mm

GARAGE DOOR HEAD DETAIL - EIFS
SCALE 1:5

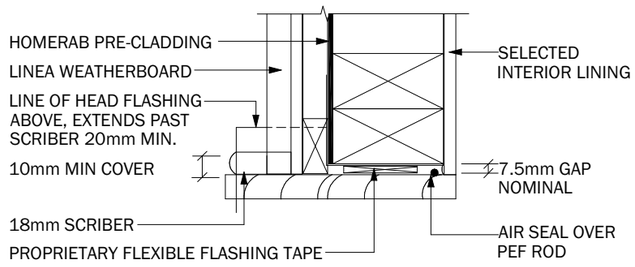

GARAGE DOOR JAMB DETAIL - LINEA WEATHERBOARD
SCALE 1:5

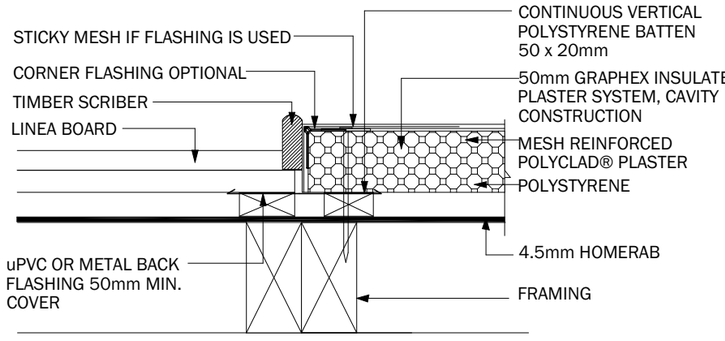

VERTICAL JUNCTION LINEA - EIFS
SCALE 1:5

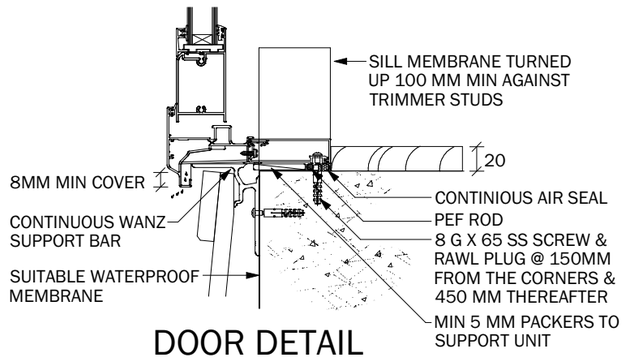

DOOR DETAIL
SCALE 1:5

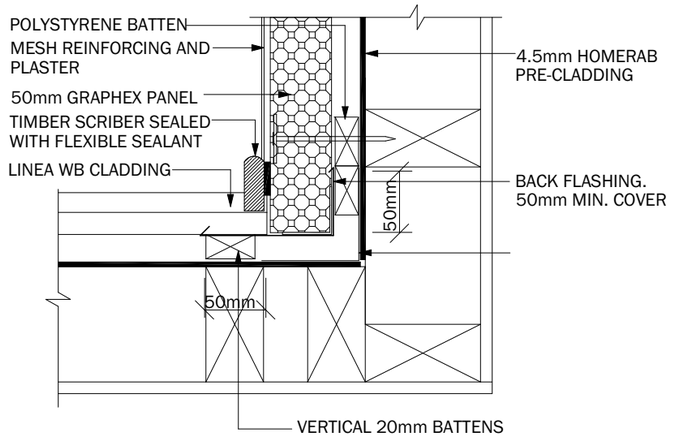

INTERIOR CORNER LINEA - GRAPHEX
1:5

CLADDING AND WINDOW DETAILS

ABA20220988
APPROVED - Site Copy
Hastings District Council
20/09/2022

REDSHAW HOMES

PROPOSED NEW HOME FOR REDSHAW HOMES
LOT 33, 6 TE ARA MATIPOU
FRIMLEY, HASTINGS

LICENSED BUILDING PRACTITIONER - BUILDING CONFIDENCE - www.dbh.govt.nz

CHECK ALL MEASUREMENTS ON SITE

Amendments:
Date:

Architectural Services by:
ONEDRAFTING
P O Box ~
Napier
Cell: 027 5431005
Email:
enquiries@onedrafting.co.nz

Issue: CONSENT
Designed and Drawn: Pam Oliver
Issue Date: 15/07/2022
Checked: Tony Black
Plot Date: 15/07/2022
Plot Time: 11:08:03 AM
Scale: 1:5
Sheet Size: A3
Project # 21-025
Sheet # 17 of 21

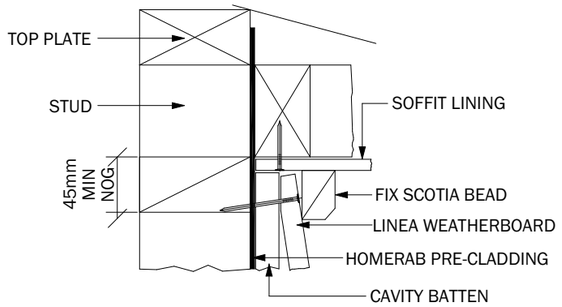

CAVITY SOFFIT JUNCTION 1:5

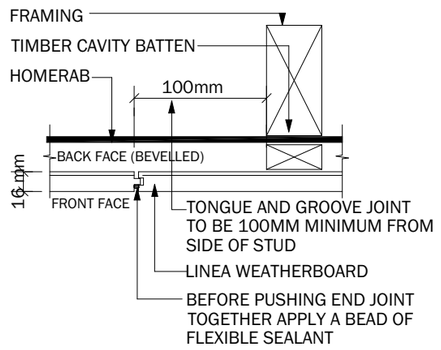

TONGUE AND GROOVE JOINT SCALE 1:5



FLAT SOAKER

ABA20220988
APPROVED - Site Copy
Hastings District Council
20/09/2022

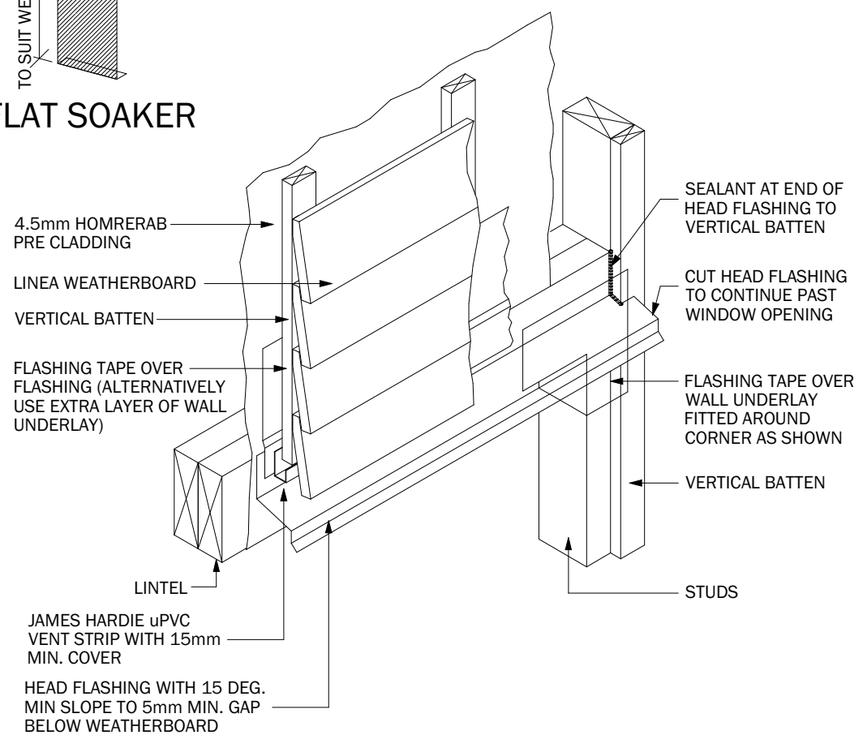

HEAD FLASHING TERMINATION 1:10

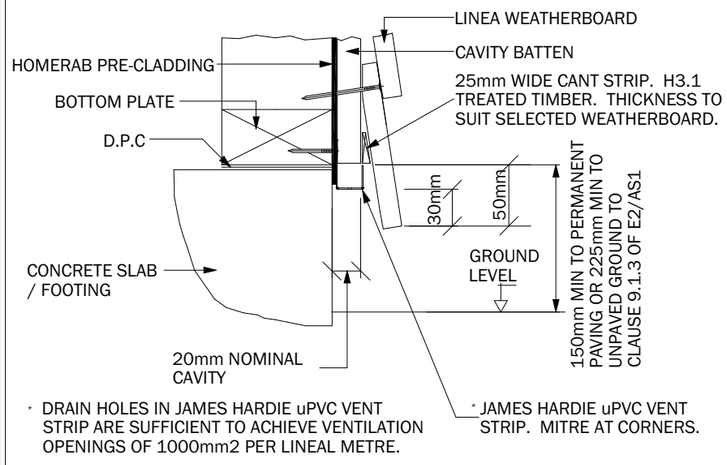

CAVITY FOUNDATION 1:5

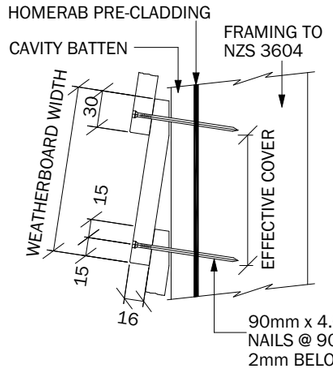

EXPOSED NAILING CAVITY WEATHERBOARD FIXING 1:5

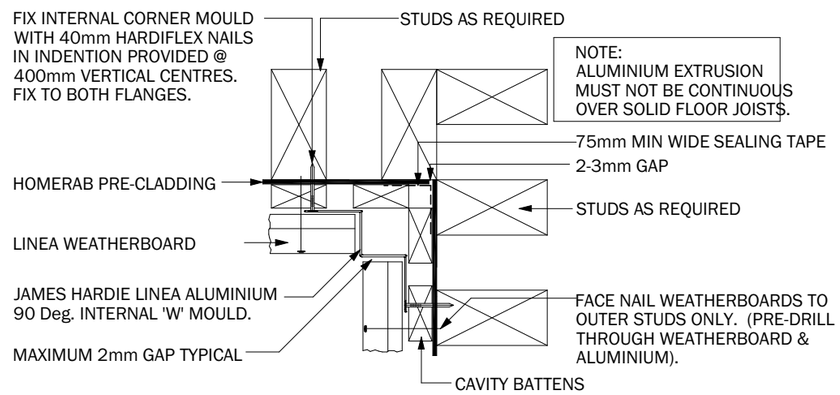

CAVITY INTERNAL 90° ALUMINIUM 'W' MOULD CORNER 1:5

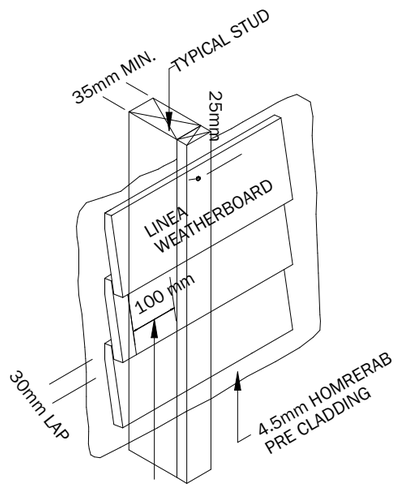

TONGUE & GROOVE JOIN IN WEATHERBOARD TO BE 100mm MINIMUM FROM SIDE OF STUD. JOINTS MUST BE STAGGERED BY 600mm MIN.

JOINTING OFF STUD SCALE 1:10

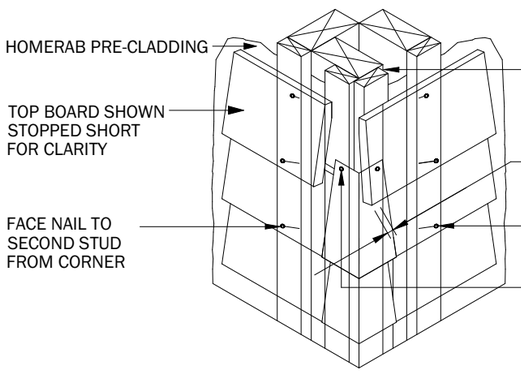

SOAKER MATERIAL	NAIL MATERIAL
COPPER	COPPER OR PHOSPHOR BRONZE
ALUMINIUM	HOT DIP GALVANISED / STAINLESS STEEL
STAINLESS STEEL	STAINLESS STEEL

CAVITY EXTERNAL CORNER SOAKER SCALE 1:10

CLADDING DETAILS

REDSHAW HOMES

PROPOSED NEW HOME FOR REDSHAW HOMES
LOT 33, 6 TE ARA MATIPOU
FRIMLEY, HASTINGS

LICENSED BUILDING PRACTITIONER BUILDING CONFIDENCE www.dbh.govt.nz

CHECK ALL MEASUREMENTS ON SITE

Amendments:
Date:

Architectural Services by:
ONEDRAFTING
P O Box ~
Napier
Cell: 027 5431005
Email:
enquiries@onedrafting.co.nz

Issue: CONSENT
Designed and Drawn: Pam Oliver
Issue Date: 15/07/2022
Checked: Tony Black
Plot Date: 15/07/2022
Plot Time: 11:08:03 AM
Scale: 1:5, 1:10
Sheet Size: A3
Project # 21-025
Sheet # 18 of 21

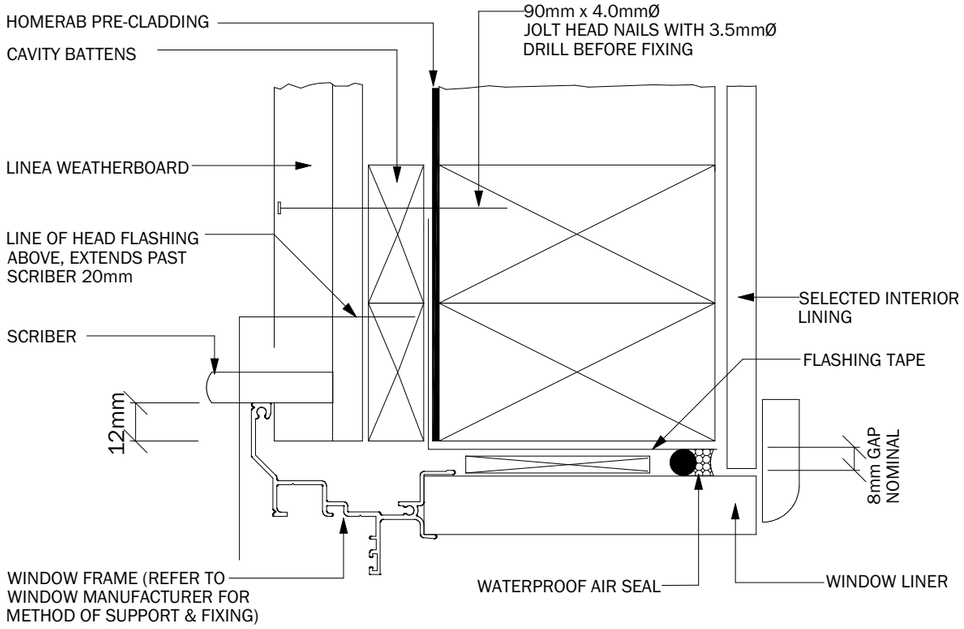

JAMB

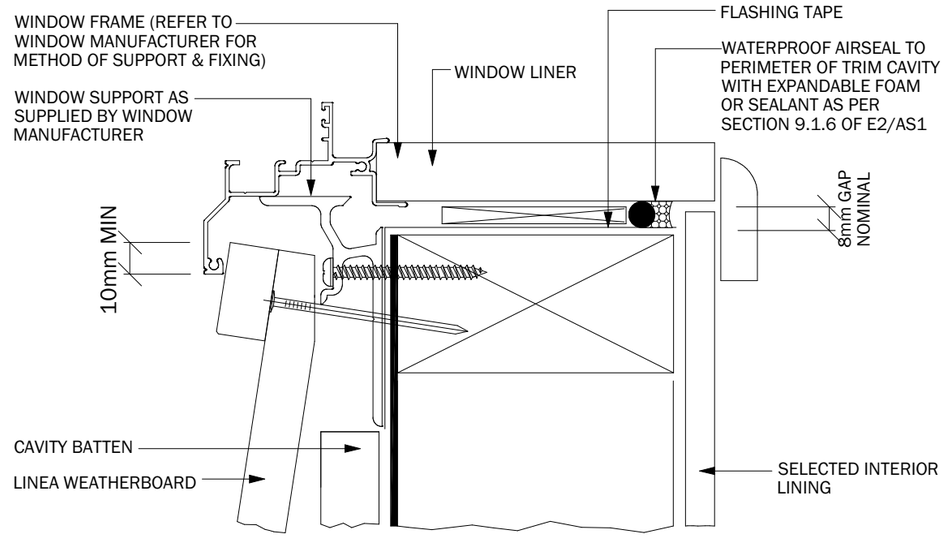

SILL

WINDOW DETAILS - CAVITY WITHOUT FACINGS
SCALE 1:2

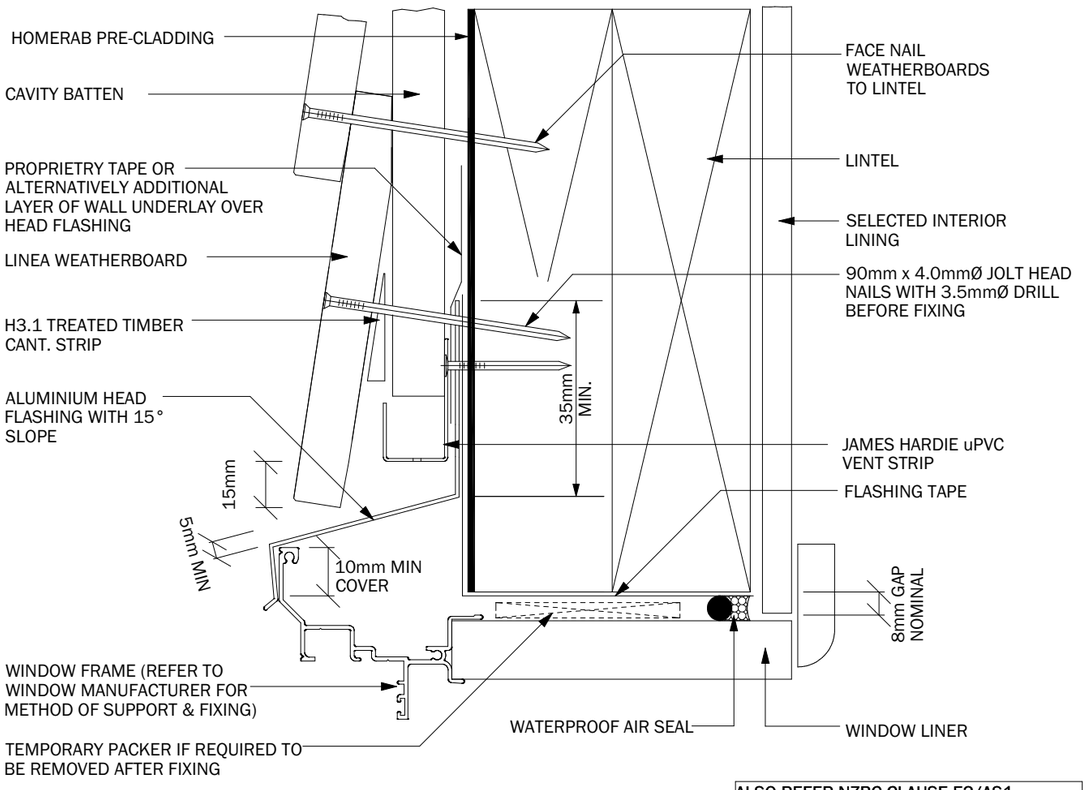

HEAD

ALSO REFER NZBC CLAUSE E2/AS1
DOCUMENT FOR HEAD & JAMB DETAILS

ABA20220988
APPROVED - Site Copy
Hastings District Council
20/09/2022

GENERAL NOTES FOR MATERIALS SELECTION
1. FLASHING MATERIALS MUST BE SELECTED BASED ON ENVIRONMENTAL EXPOSURE, REFER TO NZS 3604 AND TABLE 20 OF NZBC CLAUSE E2/AS1.
2. BUILDING UNDERLAY MUST COMPLY WITH ACCEPTABLE SOLUTION NZBC CLAUSE E2/AS1 AND NZS 3604.
3. FLASHING TAPE MUST HAVE PROVEN COMPATIBILITY WITH THE SELECTED BUILDING UNDERLAY / JAMES HARDIES RIGID AIR BARRIER AND OTHER MATERIALS WITH WHICH IT COMES INTO CONTACT AS PER TABLE 21 OF NZBC CLAUSE E2/AS1.
4. SILL SUPPORT BARS MUST COMPLY WITH EM6, E2/VM1 AND B2/AS1 REFER TO THE MANUFACTURER OR SUPPLIER FOR TECHNICAL INFORMATION FOR THESE MATERIALS.

WINDOW DETAILS

REDSHAW HOMES

PROPOSED NEW HOME FOR
REDSHAW HOMES
LOT 33, 6 TE ARA MATIPOU
FRIMLEY, HASTINGS

LICENSED BUILDING PRACTITIONER
BUILDING CONFIDENCE
www.dbh.govt.nz

CHECK ALL MEASUREMENTS ON SITE

Amendments:
Date:

Architectural Services by:
ONEDRAFTING
P O Box ~
Napier
Cell: 027 5431005
Email:
enquiries@onedrafting.co.nz

Issue: CONSENT
Designed and Drawn: Pam Oliver
Issue Date: 15/07/2022
Checked: Tony Black
Plot Date: 15/07/2022
Plot Time: 11:08:03 AM
Scale: 1:2
Sheet Size: A3
Project # 21-025
Sheet # 19 of 21

ABA20220988
APPROVED - Site Copy
Hastings District Council
20/09/2022

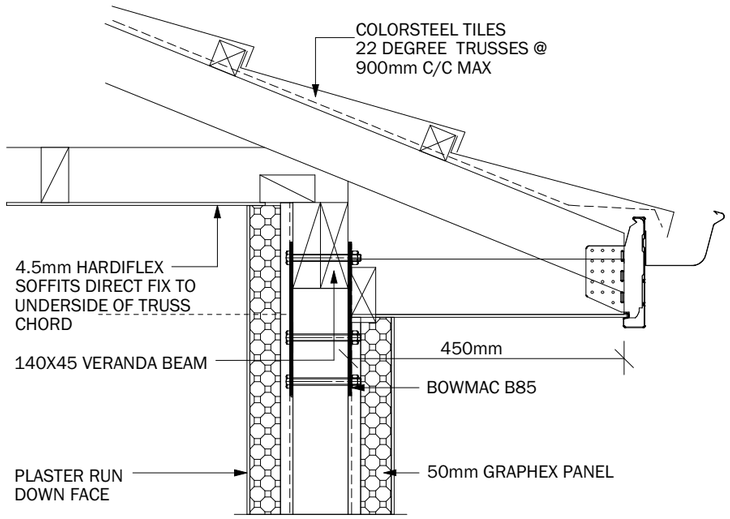

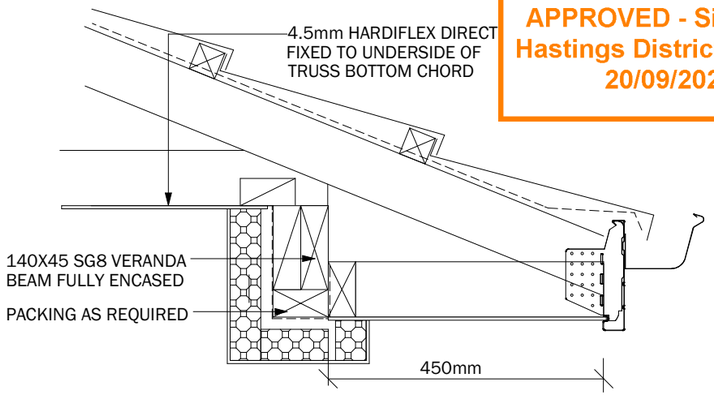

c/11 ENCASED BEAM
1:10

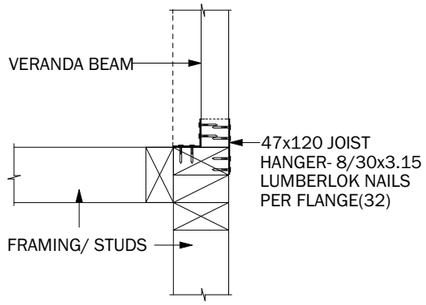

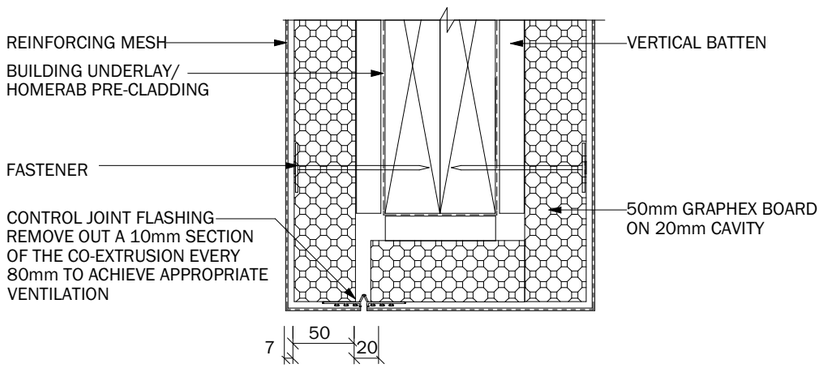

SOFFIT EDGE OR BOXED BEAM DETAIL
SCALE 1:5

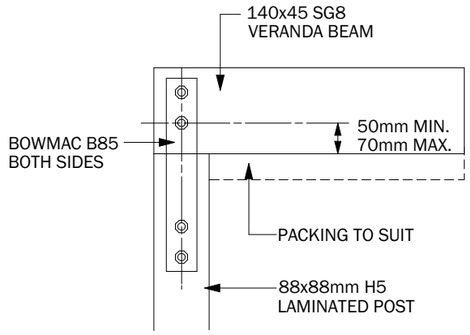

b/4 POST/BEAM CONNECTION
1:10

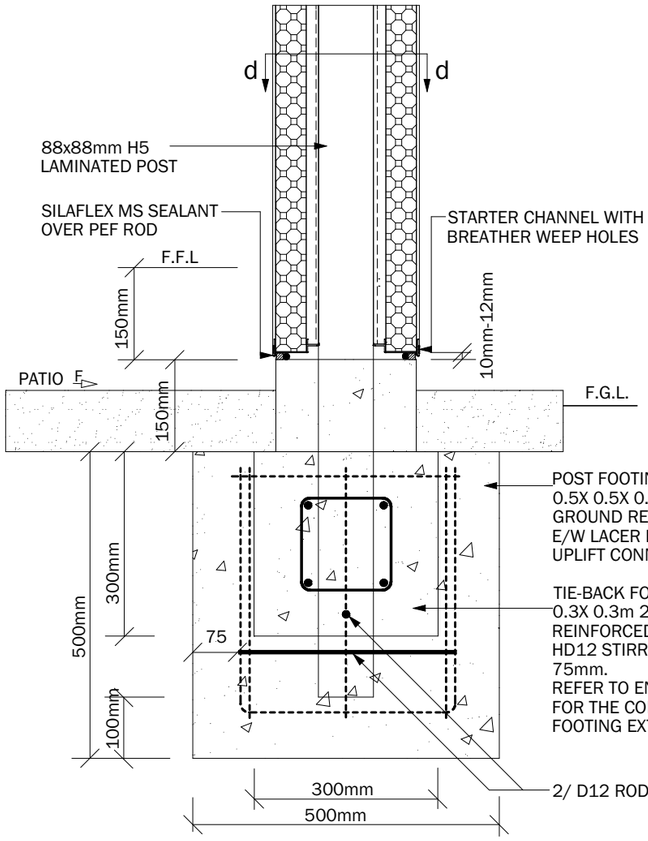

9/4 POST & FOOTING
SCALE 1:10

REFER TO RIBRAFT XPOD
ENGINEERING PLANS AND DETAILS

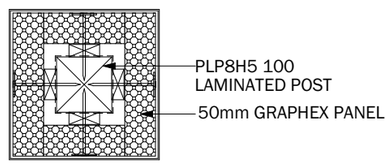

SECTION d-d
1:10

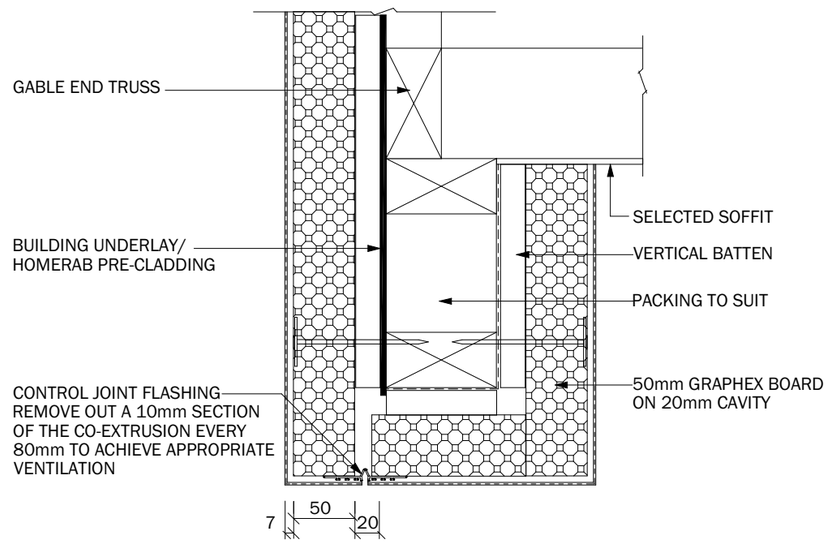

8/11 SOFFIT EDGE DETAIL
1:5

POST DETAILS

REDSHAW HOMES

PROPOSED NEW HOME FOR
REDSHAW HOMES
LOT 33, 6 TE ARA MATIPOU
FRIMLEY, HASTINGS

LICENSED BUILDING PRACTITIONER
www.dbh.govt.nz
BUILDING CONFIDENCE

CHECK ALL
MEASUREMENTS
ON SITE

Amendments:
Date:

Architectural Services by:
ONEDRAFTING
P O Box ~
Napier
Cell: 027 5431005
Email:
enquiries@onedrafting.co.nz

Issue:
CONSENT

Designed and Drawn:
Pam Oliver

Issue Date:
15/07/2022

Checked:
Tony Black

Plot Date:
15/07/2022
Plot Time: 11:08:04 AM

Scale: 1:5, 1:10
Sheet Size: A3

Project #
21-025

Sheet #
20
of 21

REFER TO WATERPROOFING SYSTEM MANUFACTURER

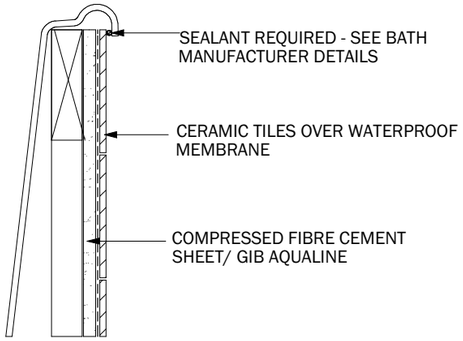

BATH EDGE DETAIL
TILED WALLS

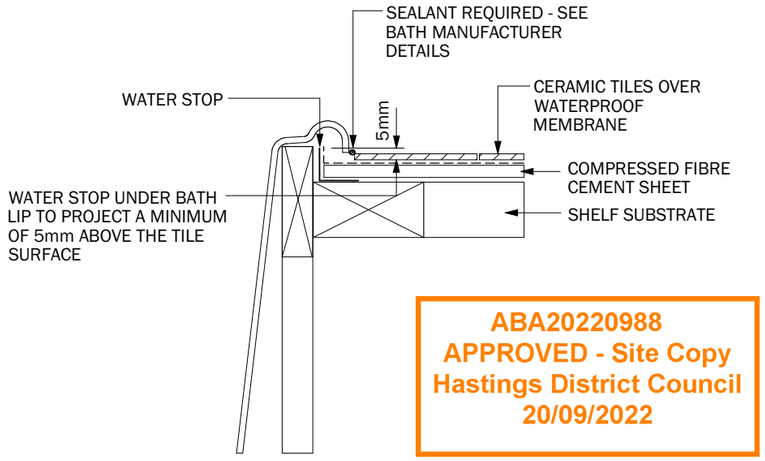

ABA20220988
APPROVED - Site Copy
Hastings District Council
20/09/2022

BATH JUNCTION DETAIL
TILED SURROUND

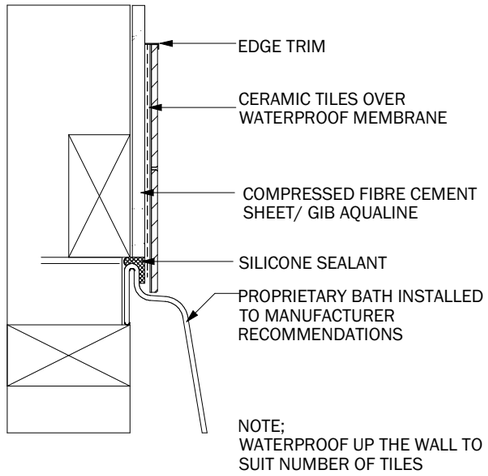

BATH / WALL DETAIL

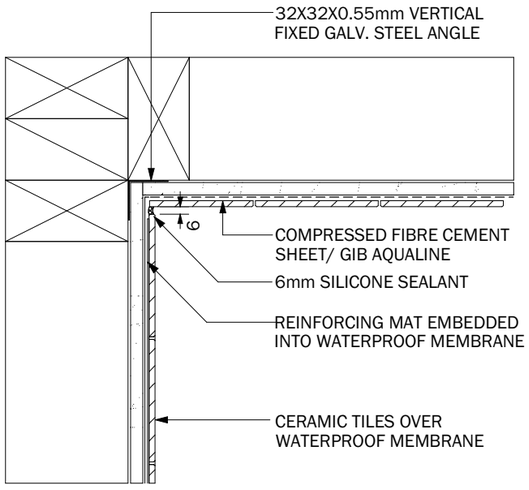

PLAN VIEW

CORNER DETAIL
TILED WALLS

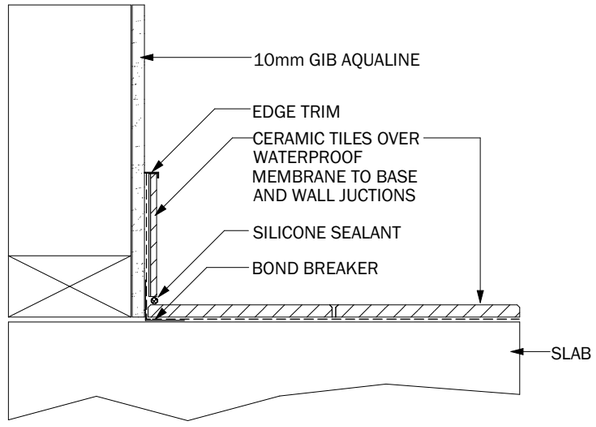

TILED WALL / FLOOR DETAIL

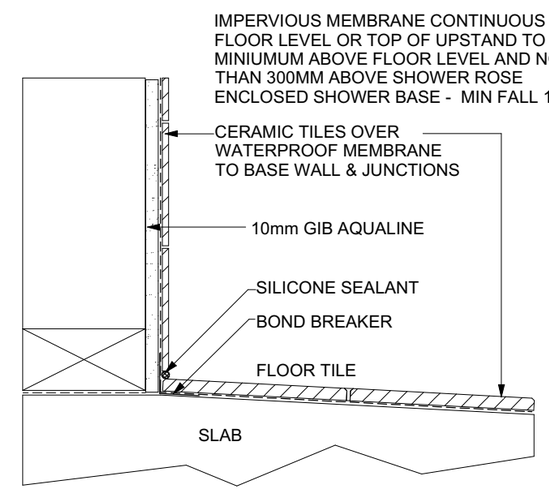

SHOWER WALL / FLOOR DETAIL

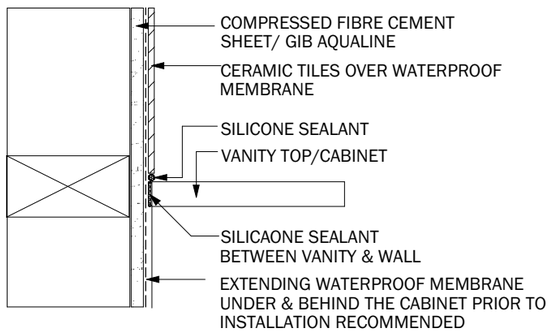

VANITY TOP / CABINET DETAIL
TILED WALLS

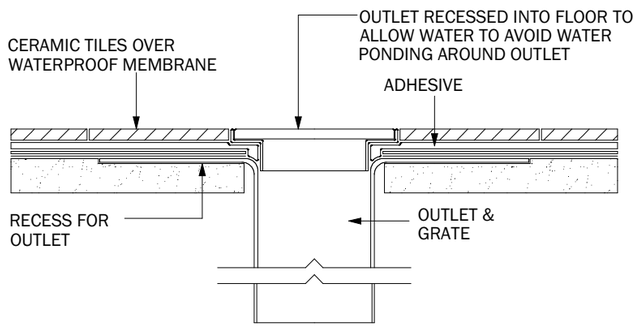

FLOOR OUTLET - TILED

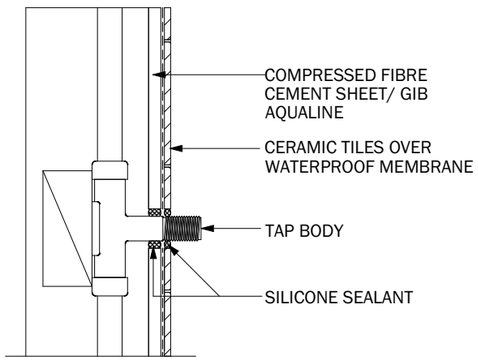

PENETRATION DETAIL
TILED WALLS

WET FLOOR DETAILS

REDSHAW HOMES

PROPOSED NEW HOME FOR REDSHAW HOMES
LOT 33, 6 TE ARA MATIPOU
FRIMLEY, HASTINGS

LICENSED BUILDING PRACTITIONER - BUILDING CONFIDENCE - www.dbh.govt.nz

CHECK ALL MEASUREMENTS ON SITE

Amendments:
Date:

Architectural Services by:
ONEDRAFTING
P O Box ~
Napier
Cell: 027 5431005
Email:
enquiries@onedrafting.co.nz

Issue:
CONSENT

Designed and Drawn:
Pam Oliver

Issue Date:
15/07/2022

Checked:
Tony Black

Plot Date:
15/07/2022
Plot Time: 11:08:04 AM

Scale: 1:5
Sheet Size: A3

Project #
21-025

Sheet #
21
of 21

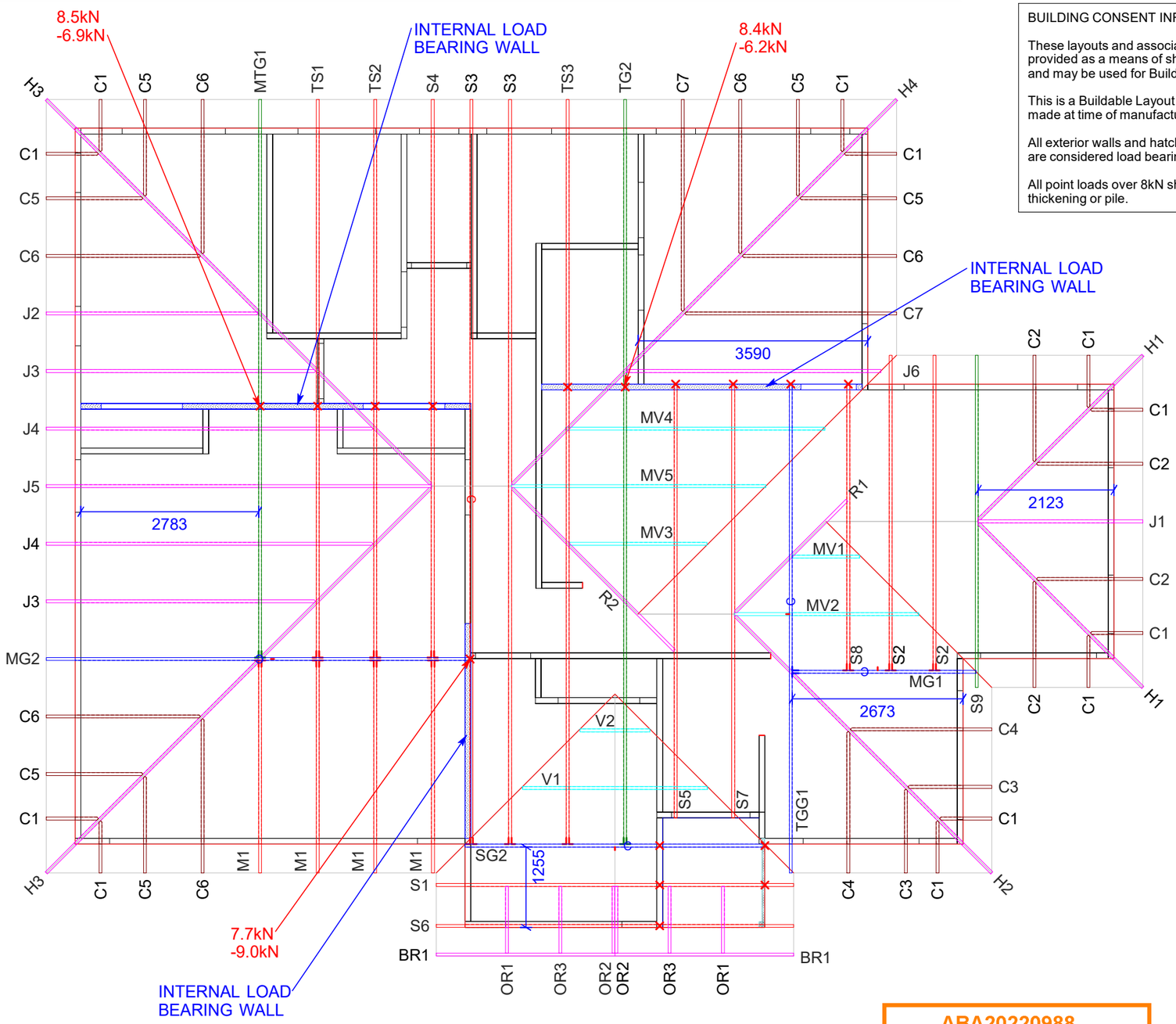

BUILDING CONSENT INFORMATION :

These layouts and associated design statements are provided as a means of showing compliance with NZBC and may be used for Building Consent purposes only.

This is a Buildable Layout that may have dimensional changes made at time of manufacture.

All exterior walls and hatched interior walls shown on this layout are considered load bearing.

All point loads over 8kN shown and may require slab/pad thickening or pile.

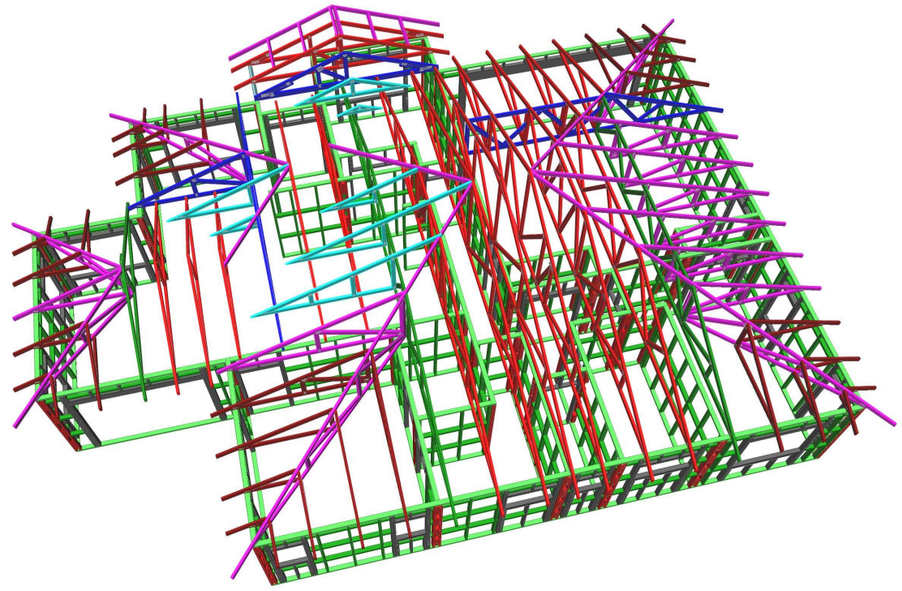

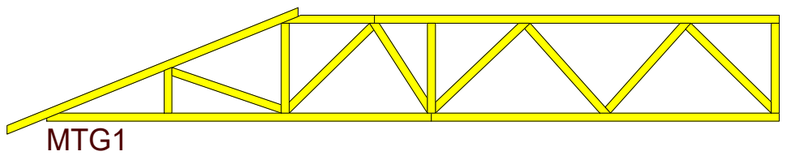

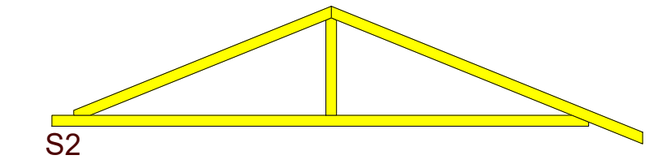

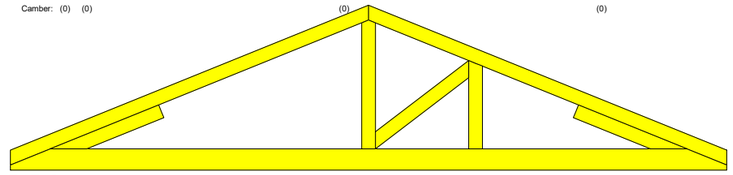

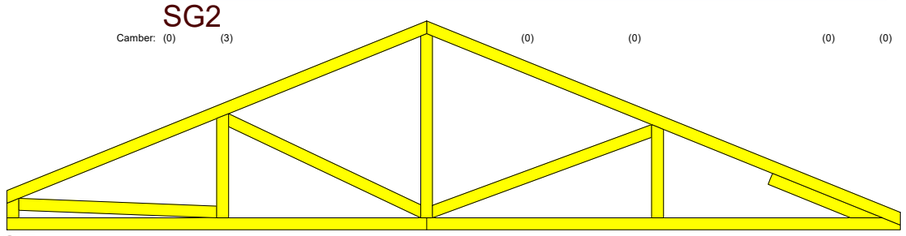

ABA20220988
APPROVED - Site Copy
Hastings District Council
20/09/2022

THIS CONSENT IS BASED ON THE DRAWINGS ISSUED, DATE: 31/03/2022

Customer	: Redshaw Homes	BUILDABLE LAYOUT FOR CONSENT	Roofing	: Pressed metal tiles	Job Ref 7011Q
Site Address	: 33 Ikanui Road, Stage 1		Pitch	: 22.00 Deg.	Scale
	: Frimley		Spacing	: 900	Level
			Design Wind Velocity	: 44.00 m/s (Ult.)	
			Detailer	: <None>	

ABA20220988
APPROVED - Site Copy
Hastings District Council
20/05/2022

CRESCO
www.cresco.co.nz



24/7 CONTACT CENTER
0800 11 33 11

48HR DESIGN TURNAROUND

Inventors of the technology behind the RibRaft® Xpod™.

We are the best for keeping your foundation costs down as we know the RibRaft® Xpod™ Foundation System best.

STRUCTURAL PLANS

iMARK™
Scan to check the latest version of this document Free App on cresco.co.nz

JOB	DOCUMENT	REV.	DATE	ISSUED BY
7042	F001	A	30.06.22	FPA

PROJECT: 6 TE ARA MATIPOU - FRIMLEY, HASTINGS

ABA20220988
APPROVED - Site Copy
Hastings District Council
20/09/2022

iMARK™

Cresco recommends to check you are working off the most recent version of the plans.

In the building industry, the use of misleading or incomplete construction plans may constitue a cause for setbacks on site and avoidable cost escalation.
Unfortunately, plans are prone to deterioration, may get lost and they often need to be revised during construction.

Introducing iMARK™, the easy gateway for an instant access to the latest revision of all your documents.

With a simple snap of your smartphone on just one document, you will be able to download from the cloud the most recent version of the set of documents making up your project.

By using the iMARK™ you willl have access to all your files from the hard copy. Anywhere. Anytime.

Any QR code reader can be used to scan the iMARK™.

A Free App is available from http://www.cresco.co.nz/imark.html

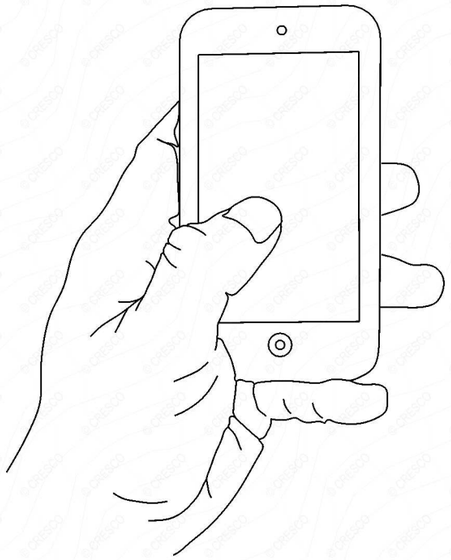

GENERAL NOTES

1. Cresco does not accept any liability of any kind whatsoever from other parties than the owner / developer indicated within the PS1.
2. Refer to the architectural plans for dimensions, levels and rebates, recessed areas, steps, services, plumbing layout, holding down bolts and embedded items.
3. Plans to be read in conjuction with the architectural documentation. The architect must be notified for any inconsistency, error or omission in the documents, or between documents.
4. All dimensions and levels are to be checked on site before fabrication.
5. Material performance to comply with all aspects of the NZ Building Code, approved documents and nzs 3604:2011.
6. Apply proprietary materials and components to the manufacturer's express written instructions.
7. Plans A3 format, do not scale drawings.
8. All dimensions are in millimetres unless otherwise noted.
9. The drawings are to be read in conjuction with the installation procedure in sheet 4.
10. The installer shall assess the acceptability of the ground across the entire building platform before proceeding with the construction.
11. Refer to the geotechnical investigation report and/or geotechnical engineer recommendations for ground improvement works if any.

COPYRIGHT

© 2016-2021, Cresco Engineers New Zealand Limited Copyright - All right reserved.

The Content of this set of plans is the property of Cresco Engineers New Zealand Limited (Cresco).
The Content is protected by copyright laws and design rights. Any unauthorized use of the Content will be considered a violation of Cresco's intellectual property rights.
Cresco reserves all tacit and direct rights to patents, copyrights or technical information relating to the Content.
No Content may be copied (including, but not limited, by means of vectorization, re-drawing, screenshot), reproduced, used to create derivative works, distributed, published or used in any way, in whole or in part, without prior written agreement with Cresco.
Violations of Cresco's intellectual property rights may be subject to civil and criminal penalties.

Patents: NZ625921, EU14807425 (app.), CHI201480044297, AU2014275575, US14/895972, NZ Design Certificates of Registration Nos. 421383, 421384, 421385, 421386, 421387.

RibRaft® and Xpod™ are Firth Industries trademarks.

© Cresco Copyright - Registered Designs are included within this set of plans. All right reserved.
Certificates of Registration for NZ Design Nos. 421383, 421384, 421385, 421386, 421387.
RibRaft® and Xpod™ are Firth Industries trademarks.

iMARK™
Scan to check the latest version of this document Free App on cresco.co.nz

6 TE ARA MATIPOU - FRIMLEY, HASTINGS
PROJECT

JOB	DOCUMENT	REV.	DATE	ISSUED BY
7042	F001	A	30.06.22	FPA

CRESCO
Get in touch with our team of foundation design specialists.
VISIT CRESCO.CO.NZ NOW

DOCUMENT TITLE	SCALE	FORMAT	SHEET
GENERAL NOTES	NTS	A3	S1

ABA20220988
APPROVED - Site Copy
Hastings District Council
20/09/2022

INSPECTION SCHEDULE

For this project Cresco recommends a Chartered Professional Engineer (or nominated representatives) to undertake the inspections included within this schedule:

Inspection of cut / fill* building platform:
Bearing Capacity Confirmation (Ref. 1S3)

Pre-pour visit:
Reinforcing, pipes penetrations details, Pods layout

(*)Fill compaction density assessment is required for fills with a depth of 400 mm or more. For those with a depth of less than 400 mm the instructions provided in NZS3604 clause 7.5.3.1 are applicable unless specific unexpected issues occur (e.g. if a soft spot is identified during the cut inspection), in which case the fill compaction density assessment may still be required. When the compaction density assessment is required additional visits are likely to be needed.

A CPEng nominated by Cresco New Zealand Engineers Limited will issue a PS4 (Producer Statement - Construction Review) if the building works have been completed (i) in accordance with the relevant requirements of the Building Consent and Building Consent Amendments clause B1, (ii) in compliance with the structural documentation and if (iii) all site inspections contained within this inspection schedule have been carried out by inspectors appointed or approved by Cresco.

It is under the responsibility of the owner's agent or contractor to notify the Engineer when inspections are to be required.

Inspections may be combined or added to at the sole discretion of the CPEng engineer in charge for the PS4 issue.
A PS3 (Producer Statement - Construction) might be required to the contractor prior to the issue of a PS4.

PLEASE BOOK YOUR SITE VISIT AT:
WWW.CRESCO.CO.NZ➔MONITORING
(www.cresco.co.nz/booking)

YOUR JOB NUMBER IS:

7042

BILL OF QUANTITIES

Quantities included within this list are approximated and they are provided for reference only. The installer shall make his own bill of quantity. Cresco does not accept any responsibility for the reliability, accuracy or completeness of the data contained within this list.

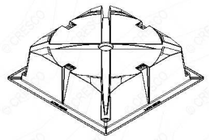	RibRaft® Xpod™ 215/750 (some additional pods might be needed in correspondence of embedded services)	241 pcs
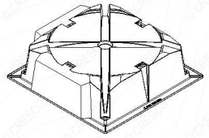	RibRaft® Xpod™ 215/1500	0 pcs
	RibRaft® Xpod™ Keystone 8/16 (mesh chairs H50 might also be needed to support edge beams bars)	314 pcs
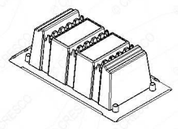	RibRaft® Xpod™ MINIPOD215/300 We recommend having some additional stock on site (some additional pods might be needed in correspondence of embedded services)	29 pcs
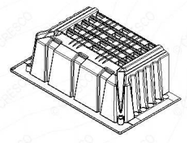	RibRaft® Xpod™ ADJ215/350.700 We recommend having some additional stock on site (some additional pods might be needed in correspondence of embedded services)	23 pcs
CONCRETE	Firth Concrete as specified in sheet 3	29 m^3
AREA	Foundation Area	163 m^2

© Cresco Copyright - Registered Designs are included within this set of plans. All right reserved.
Certificates of Registration for NZ Design Nos. 421383, 421384, 421385, 421386, 421387.
RibRaft® and Xpod™ are Firth Industries trademarks.

iMARK™
Scan to check the latest version of this document Free App on cresco.co.nz

6 TE ARA MATIPOU - FRIMLEY, HASTINGS
PROJECT

JOB	DOCUMENT	REV.	DATE	ISSUED BY
7042	F001	A	30.06.22	FPA

CRESCO
Get in touch with our team of foundation design specialists.
VISIT CRESCO.CO.NZ NOW

INSPECTION SCHEDULES — DOCUMENT TITLE
NTS — SCALE
A3 — FORMAT
S2 — SHEET

ABA20220988
APPROVED - Site Copy
Hastings District Council
20/09/2022

1 S3 BUILDING PLATFORM
N.T.S. - TYPICAL DETAIL

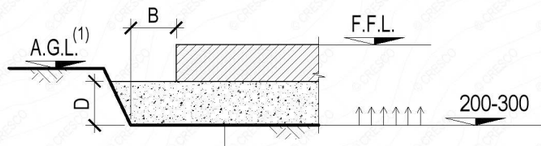

ULTIMATE BEARING CAPACITY (UBC, kPa)≥	200
ENGINEERED FILL DEPTH (2) (D, mm):	100-200
ENGINEERED FILL EXTENSION (B, mm):	100-200
A29 BIDIM GEOTEXTILE AT BASE:	NO
TX160 GEOGRID (Number of layers) (3):	0

NOTES:

(1) A.G.L. = -225 mm F.F.L. UNLESS OTHERWISE NOTED IN THE ARCHITECTURAL PLANS
(2) ENGINEERED FILL: AP40 or AP65 95% DRY DENSITY 200 mm COMPACTION LAYERS (MAX). WHEN ENGINEERED FILL DEPTH "D" IS ZERO, NO ENGINEERING FILL IS REQUIRED.
(3) GEOGRID (WHEN REQUIRED) TO BE PLACED WITH THE FIRST GEOGRID SHEET AT BASE AND SUBSEQUENT GEOGRID LAYERS @ 200 mm INTERVALS

SITE VERIFICATION CHECKS:

- ULTIMATE BEARING CAPACITY (UBC)
- NO INTERFERING BURIED SERVICES
- NO EVIDENCE OF EROSION OR LAND INSTABILITY
- NO UNCONTROLLED LAND FILLING
- NO ORGANINCS

The installer shall get the acceptability of the ground across the entire building platform assessed before proceeding with the construction.

Cresco will require a soil/cut report confirming what above as a condition for issuing a PS4.

Refer to the geotechnical investigation report and/or geotechnical engineer recommendations for ground improvement works if any.

3 S3 BURIED SERVICES
N.T.S. - TYPICAL DETAIL

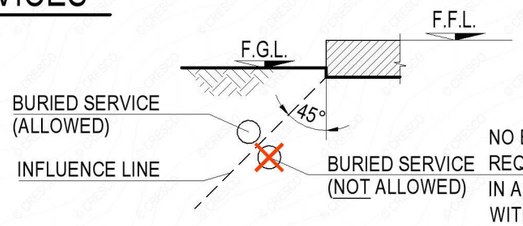

NO BURIED SERVICES OTHER THAN THE PIPES REQUIRED BY THE ARCHITECT AND CONSTRUCTED IN ACCORDANCE WITH THE DETAILS PROVIDED WITHIN THIS SET OF PLANS ALLOWED WITHIN THE INFLUENCE LINE

4 S3 SLOPING SURFACES
N.T.S. - TYPICAL DETAIL

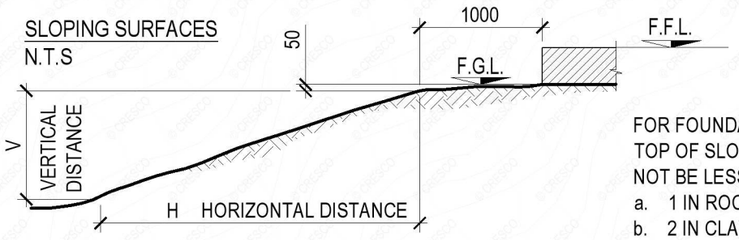

FOR FOUNDATIONS ERECTED AT THE TOP OF SLOPE THE H/V RATIO SHALL NOT BE LESS THAN:
a. 1 IN ROCK
b. 2 IN CLAY
c. 3 IN OTHER MATERIALS

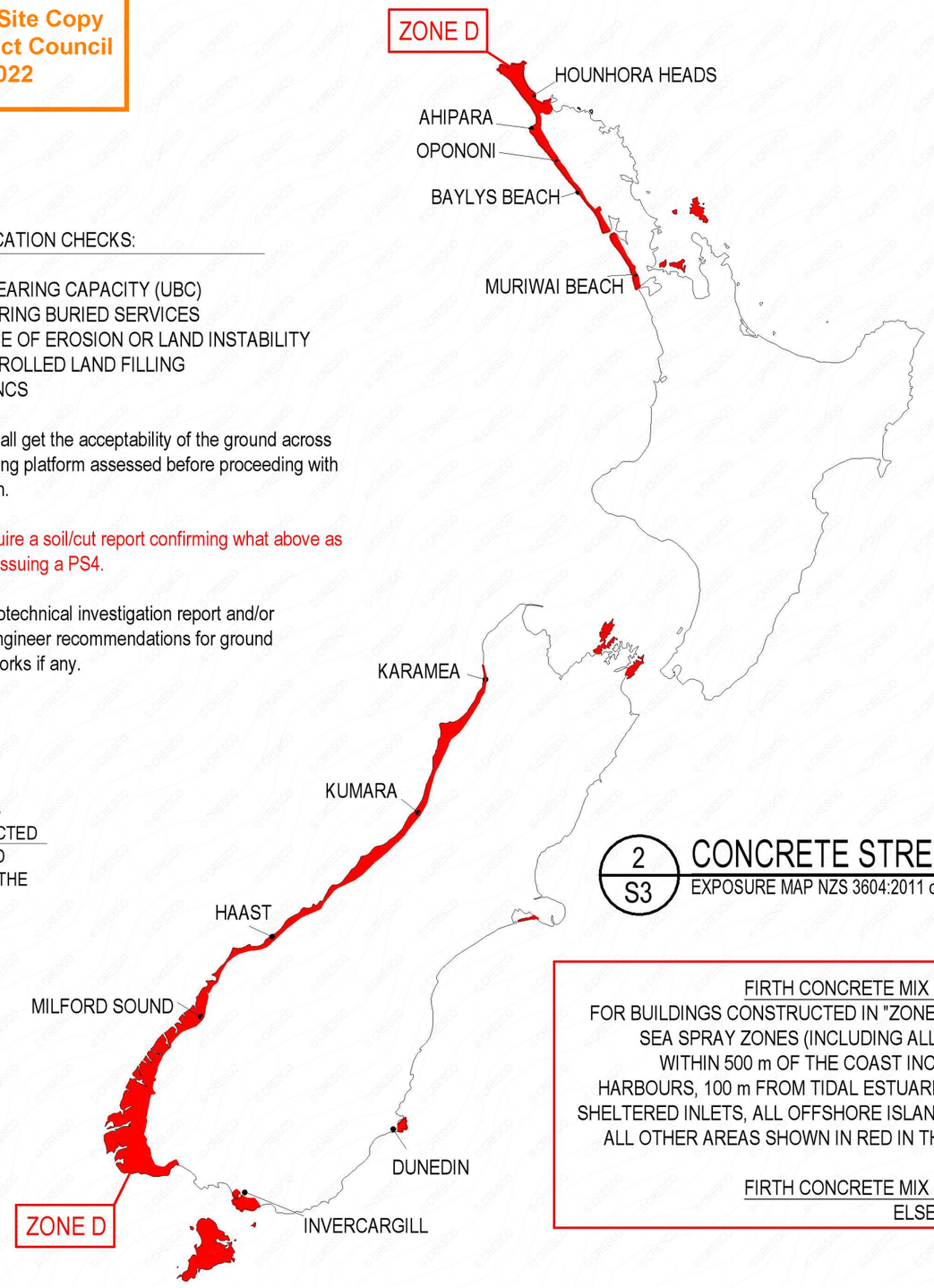

2 S3 CONCRETE STRENGTH
EXPOSURE MAP NZS 3604:2011 cl. 4.2.3

FIRTH CONCRETE MIX IP2519X
FOR BUILDINGS CONSTRUCTED IN "ZONE D" AND SEA SPRAY ZONES (INCLUDING ALL AREAS WITHIN 500 m OF THE COAST INCLUDING HARBOURS, 100 m FROM TIDAL ESTUARIES AND SHELTERED INLETS, ALL OFFSHORE ISLANDS AND ALL OTHER AREAS SHOWN IN RED IN THE MAP)

FIRTH CONCRETE MIX IP2019X
ELSEWHERE

© Cresco Copyright: - Registered Designs are included within this set of plans. All right reserved. Certificates of Registration for NZ Design Nos. 421383, 421384, 421385, 421386, 421387. RibRaft® and Xpod® are Firth Industries trademarks.

iMARK™
Scan to check the latest version of this document Free App on cresco.co.nz

6 TE ARA MATIPOU - FRIMLEY, HASTINGS				
PROJECT				
7042	F001	A	30.06.22	FPA
JOB	DOCUMENT	REV.	DATE	ISSUED BY

CRESCO
Get in touch with our team of foundation design specialists.
VISIT CRESCO.CO.NZ NOW

BUILDING PLATFORM & SEA SPRAY ZONES	NTS	A3	S3
DOCUMENT TITLE	SCALE	FORMAT	SHEET

ABA20220988
APPROVED - Site Copy
Hastings District Council
20/09/2022

1. SITE PREPARATION
All vegetation, topsoil and other organic or deleterious material shall be removed from the area to be covered by the building (formation area) prior to commencing construction of the system.

2. EARTHWORKS
The formation area shall be prepared in accordance of detail 1S3 and under the supervision of a qualified professional.
Where fill is required to achieve this level or a suitable bearing capacity, the fill is subject to site verification and must be certified by personnel appointed by Cresco or, for fills that are less than 400 mm deep, shall be installed in accordance with Clause 7.5.3 of NZS 3604:2011 “Timber Framed Buildings”. The installer / engineer shall get the acceptability of the ground over the entire building platform assessed before proceeding with the construction.
Council inspectors might want to inspect site before slab construction commences.

3. PLUMBING AND SERVICES (beneath the system)
Plumbing and services required beneath the system should preferably be conveyed underground to their plan location then brought up through the system. The trenching, placing, and bedding of the pipes/ducts and the backfilling of the trenches shall conform to the requirements of the consent documentation.

4. SAND BLINDING
A layer of sand shall be placed, screeded and compacted over the building platform, extending to at least 300 mm beyond the system perimeter. The maximum thickness of this blinding layer shall be 40 mm. If the ground has
been softened (i.e. has a muddy surface layer due to construction activities), remove the softened material before placing the sand. Granular fill required If excavation lowers the ground surface to more than 40 mm below the underside of the foundation.

5. DAMP PROOF MEMBRANE
The RibRaft® Thermox DPM or NZS 3604 compliant DPM shall be laid over the entire building platform (to the outer edge of the perimeter at least) directly on top of the sand blinding layer. The joints shall be lapped 50 mm and sealed with RibRaft® Thermox Tape or pressure sensitive tape.
All penetrations of the DPM by plumbing and services or punctures during construction shall also be sealed with RibRaft® Thermox Tape or pressure sensitive tape.

6. EDGE FORMWORK
The edge formwork shall be constructed ensuring that the requirements of NZS 3109:1997 “Concrete Construction” are adhered to. The formwork shall be adequately supported and braced to prevent any buckling or warping. If the wall is to be constructed in masonry veneer, formwork for a masonry veneer rebate should be adequately fixed to the perimeter formwork. Foundation positioning and levels might need to be certified by a land surveyor before pouring, it is recommended to organize the inspection at this stage.

7. LAYING THE PODS AND KEYSTONES
The RibRaft® Xpod™ 215/750 or 215/1500 pods (as specified at sheet n.5) shall be laid out over the DPM in a regular waffle pattern ensuring direct contact with the ground across the entire pod. All pods shall be locked at each corner with a RibRaft® Xpod™ Keystone 8/16 connector. Make sure the Keystone connector pins engage and click into the holes placed at each corner of the pods. "Set out start" corner is indicated in this set of plans. Lay RibRaft® Xpod™ MINPOD 215/300 and ADJ215/350.700 pods any time (at the edges, steps, penetration lines...) a full pod does not fit within the available space.

8. PLUMBING AND SERVICES (within the system)
Services shall be placed in accordance with the details provided by Cresco and along orthogonal directions matching the pods layout. RibRaft® MINIPODs 215/300 can be used to reduce concrete consumption along services lines. Allowed diameters of the services/ducts, positioning constraints and localized strengthenings are dictated within this set of plans.

9. REINFORCING STEEL BARS
The reinforcing bars in the ribs and edge beams shall conform to AS/NZS 4671:2001. Specifically designed spacers (RibRaft® Xpod™ Keystones 8/16) are used to hold in place and retain the reinforcing bars within the ribs in a secure manner until the concrete is placed with no need for the reinforcing bars to be tied.
50/65 bar chairs to be used to support the reinforcing bars within the edge beams as necessary. Reinforcing bars within the edge beams when not retained by keystones to be tied and fixed in their position. Unless otherwise noted, reinforcing bars shall lap as follow:
10 mm diameter bars: 600 mm
12 mm diameter bars: 720 mm
16 mm diameter bars: 960 mm
Unless otherwise specified, 50 mm cover to the edge of the beam and 50 mm cover to the DPM surface shall be allowed for.

10. MESH REINFORCING
Top reinforcing steel in the top slab, unless otherwise specified, shall consist of Welded Reinforcing Mesh complying with AS/NZS 4671:2001 with a minimum weight of 2.27 kg/m², a lower characteristic stress of 500 MPa, square configuration of orthogonal bars between 150 to 300 mm centres and ductility class L or E. The Reinforcing Mesh shall be placed on top of RibRaft® pods without mesh chairs unless otherwise specified. The Reinforcing Mesh shall lap a minimum of 225 mm or 1 grid space + 50 mm (which ever is the greater). The Reinforcing Mesh shall be tied (1@600mm) at all laps.
U.N.O. two bars (Grade 500E and diameter specified in sheet 5), 1200mm long shall be placed across the corner, tied to the top of the mesh at re-entrant corners at 200 mm centres, with 50 mm cover from the internal corner.

11. CONCRETE PLACING AND FINISHING
Concrete placing, finishing and curing shall be in accordance with NZS 3109:1997, Clause 7.
Concrete to be poured monolitically.
U.N.O. one of the following Firth concrete products shall be used in the system:
1 FIRTH CONCRETE MIX IP2019X
2 FIRTH CONCRETE MIX IP2519X for buildings constructed in the ‘sea spray zone’ (including all areas within 500 m of the coast including harbours, 100 m from tidal estuaries and sheltered inlets, all offshore islands and all other areas shown in red in the map in sheet 3)
The concrete shall be compacted with the use of an immersion vibrator around all steel and into all corners of the formwork.
Screeding with the aid of a level shall commence immediately after compaction. Unless specifically installed as a screeding datum, the top of the formwork shall not be assumed as level and thus shall not be used for screeding purposes. Final finishing with a trowel shall take place after all the bleed water has evaporated.
The edge of the slab and rebates shall be tooled to prevent chipping of the top of the slab.
Early age care of the slab shall be in accordance with good trade practice appropriate for the weather conditions. The surface shall be a blemish free surface to class U3 finish (refer NZS 3114:1987). Proper curing of the concrete must take place immediately after finishing the concrete. One of the following methods of curing is recommended: (i) ponding or continuous sprinkling of water (ii) placing a wet covering or plastic membrane over the slab or (iii) using liquid membrane curing compounds.
Immediate and continuous wet curing to reduce the maximum temperature and/or raise the minimum temperature can reduce the risk of this type of cracking.
No saw cuts are required unless specified, however, the contractor may opt to use saw cuts as they are not detrimental for the performance of the system. Shrinkage control joints shall be saw cut after
hardening. The saw cut shall be cut to a depth of 25mm and shall be cut no later than 24 hours in summer, or 48 hours in winter.
The shrinkage control joints shall be positioned to coincide with major changes in floor plan.
Where the concrete is to be exposed or brittle covering placed over, the maximum intermediate bay sizes shall be limited to 6 m. Bay dimensions formed by shrinkage control joints shall be limited to a maximum ratio of length:width of 2:1.
The formwork shall not be removed prior to 12 hrs. after the slab has been finished. No loads to be placed on the system before adequate curing has taken place.

© Cresco Copyright - Registered Designs are included within this set of plans. All right reserved.
Certificates of Registration for NZ Design Nos. 421383, 421384, 421385, 421386, 421387.
RibRaft® and Xpod™ are Firth Industries trademarks.

iMARK™
Scan to check the latest version of this document Free App on cresco.co.nz

6 TE ARA MATIPOU - FRIMLEY, HASTINGS
PROJECT

JOB	DOCUMENT	REV.	DATE	ISSUED BY
7042	F001	A	30.06.22	FPA

CRESCO
Get in touch with our team of foundation design specialists.
VISIT CRESCO.CO.NZ NOW

INSTALLATION PROCEDURE
DOCUMENT TITLE

SCALE	FORMAT	SHEET
NTS	A3	S4

ABA20220988
APPROVED - Site Copy
Hastings District Council
20/09/2022

DETAILS LIST

(S)Sheet . (D)Detail Number - Detail title

S3.D1 - BUILDING PLATFORM
S3.D2 - CONCRETE STRENGTH
S3.D3 - BURIED SERVICES
S3.D4 - SLOPING SURFACES
S6.D1 - RIB BARS LAP
S6.D2 - XPOD™ 215/750 LAYOUT
S7.D1 - FOUNDATION EDGE
S7.D2 - FOUNDATION TOP
S7.D3 - INTERNAL RIB
S7.D4 - GARAGE DOOR REBATE
S7.D5 - FOUNDATION CORNER
S8.D1 - EDGE BEAM WIDTH
S9.D1 - UNDERGROUND SERVICES
S10.D1 - EMBEDDED SERVICES
S11.D1 - VERTICAL PENETRATIONS
S12.D1 - TOP SLAB DEPTH
S12.D2 - FLOOR SAW CUT (1)
S12.D3 - POD DEPTH ADJUSTMENT
S13.D1 - 'MINIPOD' CONFIGURATION
S14.D1 - INTERNAL SLAB RECESS
S14.D2 - EDGE SLAB RECESS
S15.D1 - COLUMNS PAD CONNECTION

NOTES

(1) No saw cuts are required unless specified.

(2) Typical at each reentrant corner except for reentrant corners where floor saw cuts have been specified. Do not exceed 50 mm cover from beam outer edge / rebate

(3) Additional reinforcing steel other than specified within the reinforcing summary might be needed as specified on the details included within this set of drawings (e.g. at pipe penetrations, steps, stiffenings...)

(4) At least 3 bottom bars when edge beam width ≥ 400 mm and at a rate of 1 additional bar per 100 mm of width increase (i.e. 3 bars for 400 mm width, 4 bars for 500 mm width and so on).

(5) Check requirement for joinery rebate (if any)

(6) Anchor bolts with a minimum required embedment depth = 55 mm (Ramset chemset EPCON C6EF or similar) to be used for any bracing wall supported by the 85 mm top slab and requiring a reduced charateristic tensile capacity of 15 kN (e.g. but not limited to gib BL1-H).

RIBRAFT® XPOD™ 215/750

ADJ POD 215/350.700

RIBRAFT® XPOD™ MINIPOD 215/300

M5 Typ. (2)

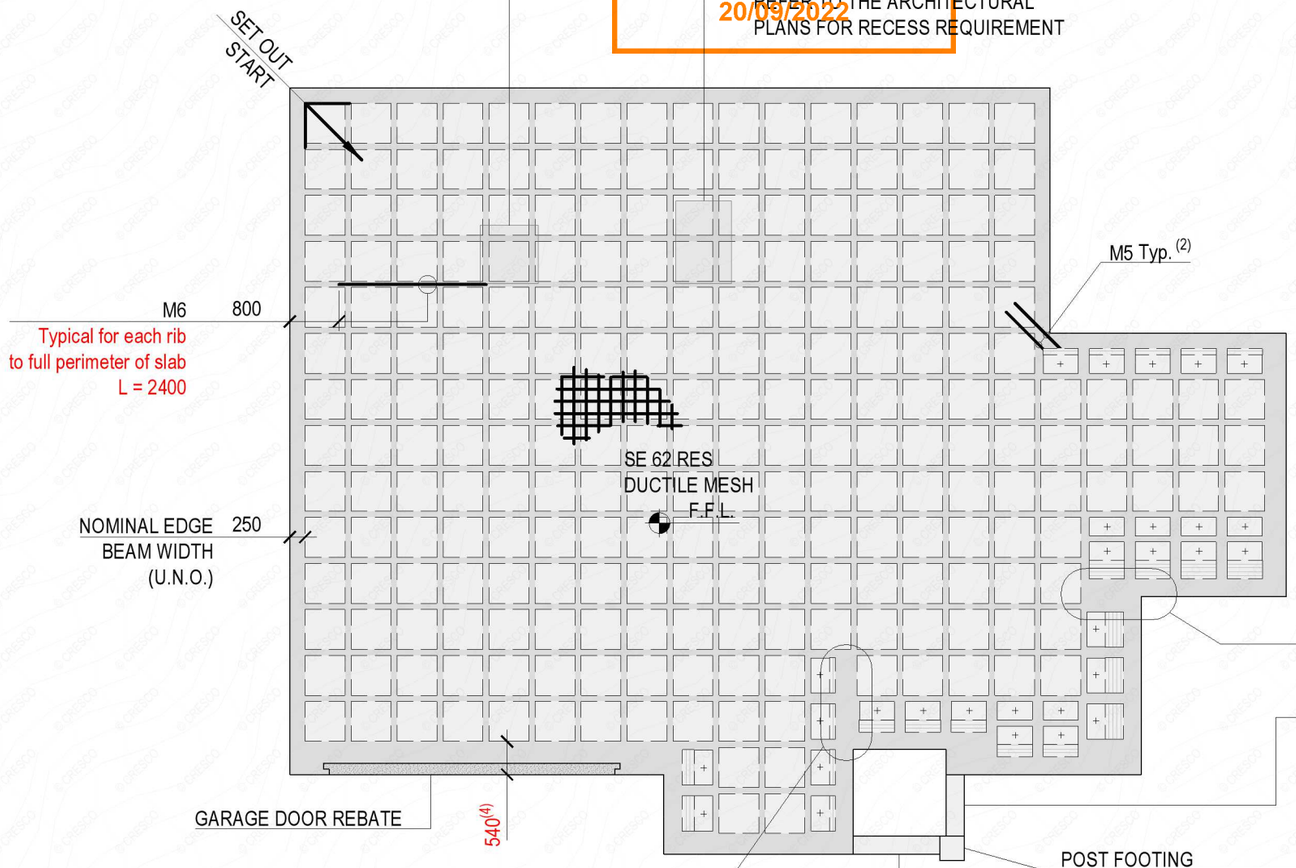

REFER TO ACCEPTABLE SOLUTION E2/AS2 PROVIDED FOR ZONE E FOR THE CORROSION PROTECTION REQUIREMENTS FOR STRUCTURAL FIXINGS IN "ZONES D"

NO SLAB THICKENINGS REQUIRED BELOW INTERNAL LOAD BEARING WALLS

THE FOUNDATION LAYOUT COMPLIES WITH THE TRUSS DESIGN PROVIDED BY CLIENT / ARCHITECT WHICH MAY CONTAIN LOAD BEARING WALLS AND / OR POINT LOADS

REINFORCING SUMMARY (3)

REINF. MESH: **CLASS E SE62** - CHAIRS NOT REQUIRED		
M1	**1HD12**	BOTTOM @ RIB EW
M2	**2HD12**	BOTTOM EDGE BEAM (4)
M3	**2HD12**	TOP EDGE BEAM
M4	**1+1HD12**	TOP/BOTTOM EDGE BEAM CORNERS
M5	**2HD12**	TOP BAR AS SPECIFIED WITHIN THE PLAN L=1200 (2)
M6	**1HD12**	TOP BAR AS SPECIFIED WITHIN THE PLAN L=2400

© Cresco Copyright - Registered Designs are included within this set of plans. All right reserved.
Certificates of Registration for NZ Design Nos. 421383, 421384, 421385, 421386, 421387.
RibRaft® and Xpod™ are Firth Industries trademarks.

iMARK™
Scan to check the latest version of this document Free App on cresco.co.nz

6 TE ARA MATIPOU - FRIMLEY, HASTINGS
PROJECT

JOB	DOCUMENT	REV.	DATE	ISSUED BY
7042	F001	A	30.06.22	FPA

CRESCO
Get in touch with our team of foundation design specialists.
VISIT CRESCO.CO.NZ NOW

FOUNDATION LAYOUT — DOCUMENT TITLE
1:100 — SCALE
A3 — FORMAT
S5 — SHEET

ABA20220988
APPROVED - Site Copy
Hastings District Council
20/09/2022

1 S6 RIB BARS LAP
1:10 - TYPICAL DETAIL

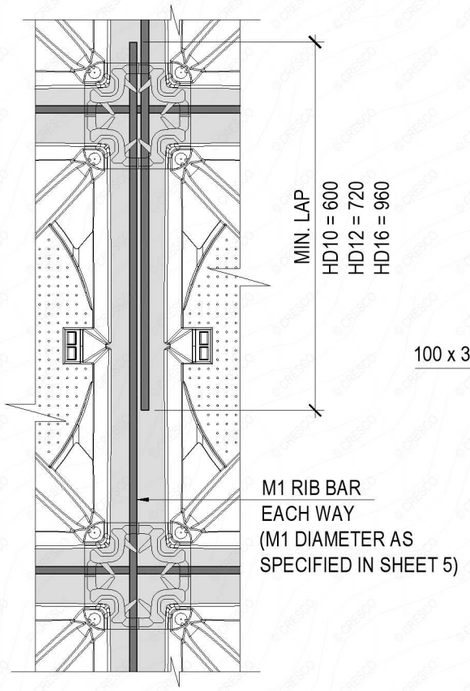

NOTE:
Prefer reinforcing overlapping where the ribs are reinforced with one bar only.
No ties are needed for bars retained with the RibRaft® Xpod™ Keystone 8/16

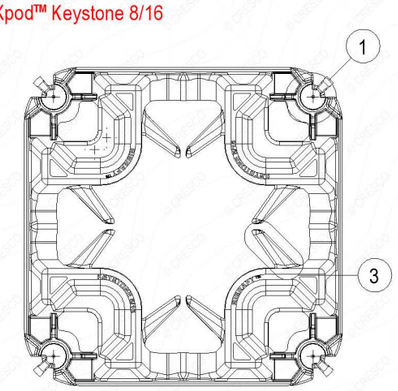

2 S6 PODS LAYOUT
1:10 - TYPICAL DETAIL

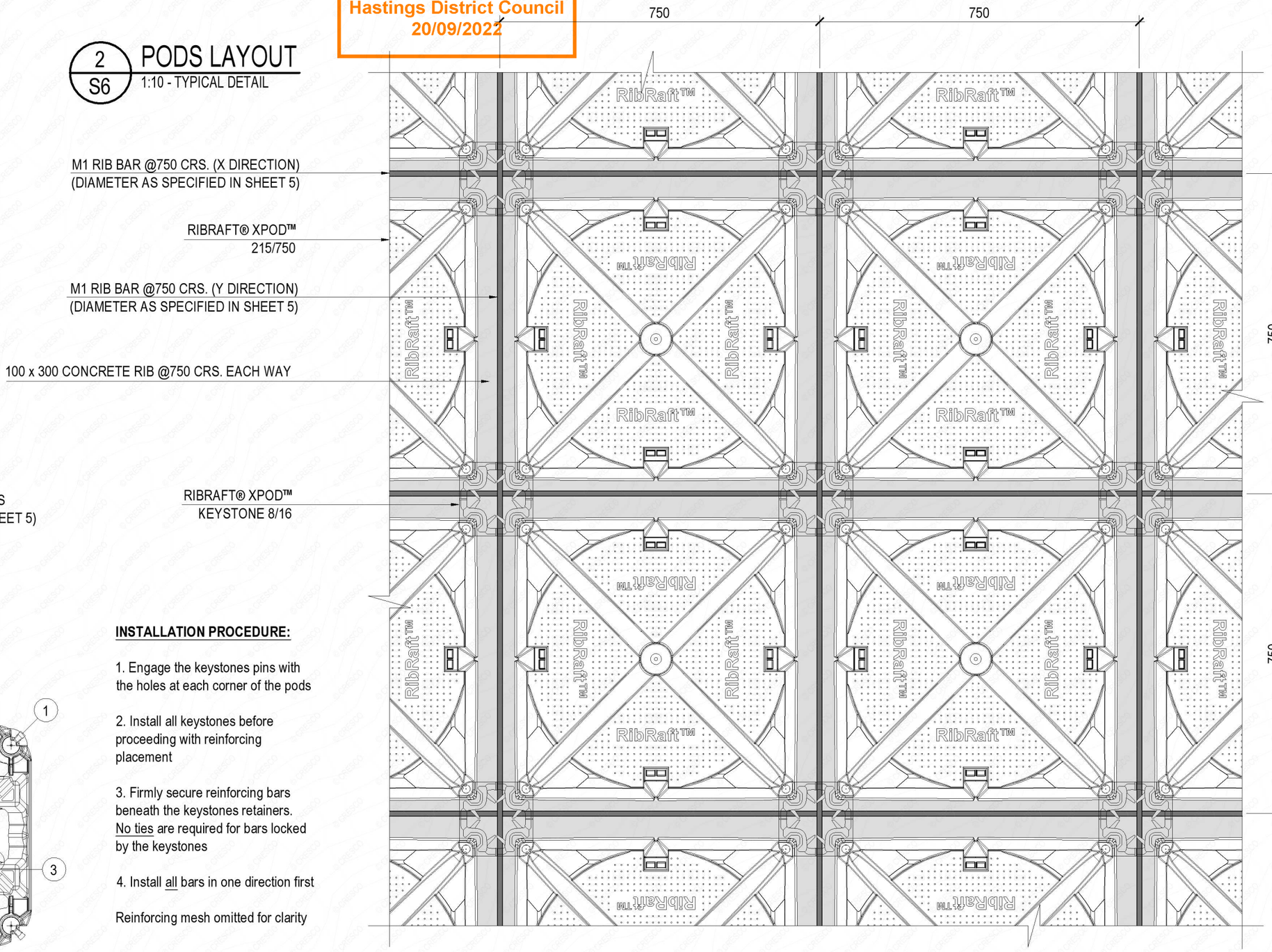

INSTALLATION PROCEDURE:

1. Engage the keystones pins with the holes at each corner of the pods

2. Install all keystones before proceeding with reinforcing placement

3. Firmly secure reinforcing bars beneath the keystones retainers. No ties are required for bars locked by the keystones

4. Install all bars in one direction first

Reinforcing mesh omitted for clarity

© Cresco Copyright - Registered Designs are included within this set of plans. All right reserved.
Certificates of Registration for NZ Design Nos. 421383, 421384, 421385, 421386, 421387.
RibRaft® and Xpod™ are Firth Industries trademarks.

iMARK™
Scan to check the latest version of this document Free App on cresco.co.nz

6 TE ARA MATIPOU - FRIMLEY, HASTINGS
PROJECT

JOB	DOCUMENT	REV.	DATE	ISSUED BY
7042	F001	A	30.06.22	FPA

CRESCO
Get in touch with our team of foundation design specialists.
VISIT CRESCO.CO.NZ NOW

PODS LAYOUT DETAIL - XPOD 215/750 | 1:10 | A3 | S6
DOCUMENT TITLE | SCALE | FORMAT | SHEET

ABA20220988
APPROVED - Site Copy
Hastings District Council
20/09/2022

1 S7 FOUNDATION EDGE
1:10 - TYPICAL DETAIL

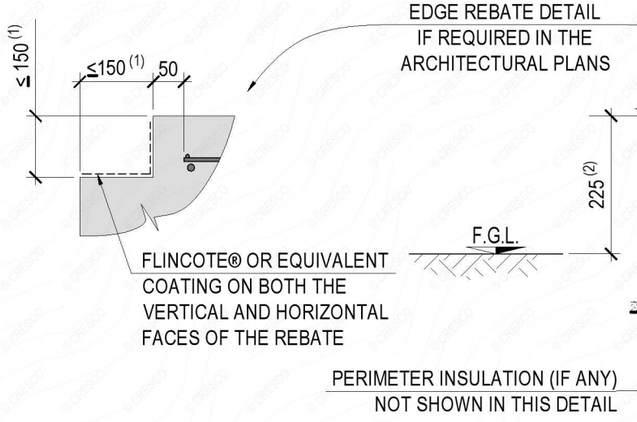

2 S7 FOUNDATION TOP
1:10 - TYPICAL DETAIL

(ADDITIONAL TOP AND/OR BOTTOM EDGE BARS OMITTED IN THE DETAIL MIGHT BE REQUIRED. SEE SHEET 5)

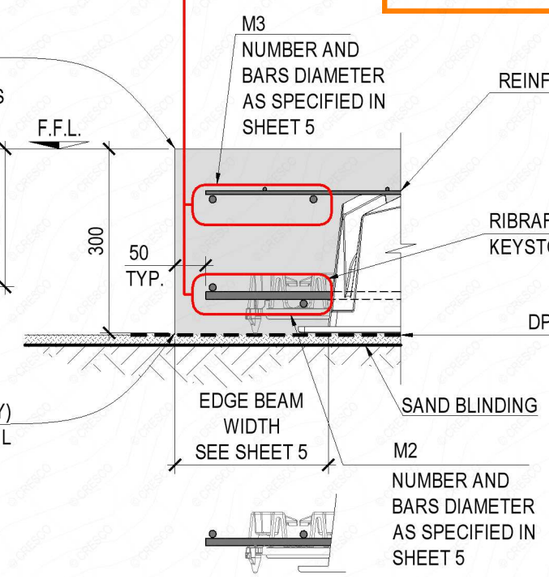

REINFORCING LAYOUT FOR
ORTHOGONAL EDGE BEAM

3 S7 INTERNAL RIB
1:10 - TYPICAL DETAIL

ADDITIONAL TOP BARS OMITTED IN THE DETAIL MIGHT BE REQUIRED. SEE SHEET 5

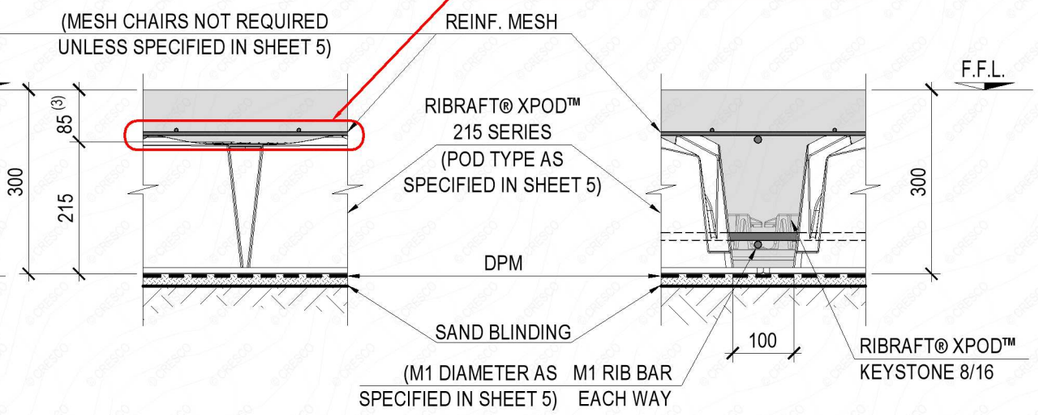

4 S7 GARAGE DOOR REBATE
1:10 - TYPICAL DETAIL

(ADDITIONAL TOP AND/OR BOTTOM EDGE BARS OMITTED IN THE DETAIL MIGHT BE REQUIRED. SEE SHEET 5)

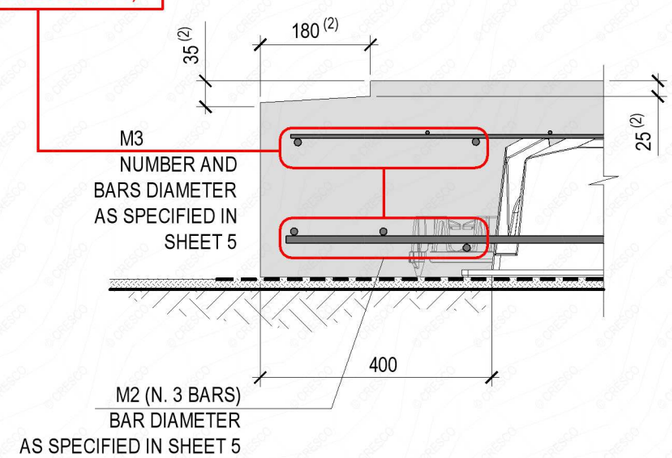

NOTES:

(1) Refer to the architectural plans for rebate measures. The edge beam width to be at least 300 mm if
W > 120 mm or H > 70 mm.
Under no circumstances w or H shall be greater than 150 mm.

(2) Unless otherwise noted in the architectural plans

(3) The contractor shall check the top slab thickness with the provisions of detail 1S12.

5 S7 FOUNDATION CORNER
1:10 - TYPICAL DETAIL

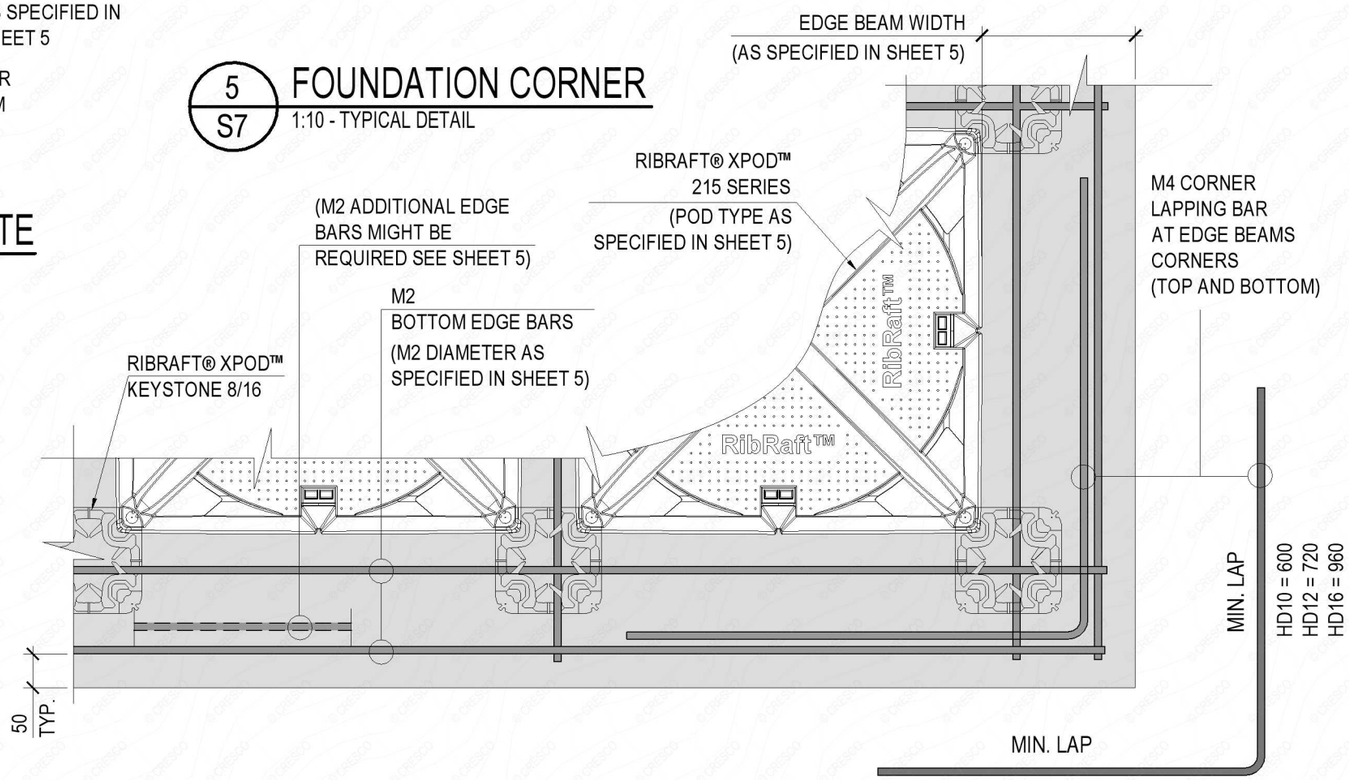

© Cresco Copyright - Registered Designs are included within this set of plans. All right reserved.
Certificates of Registration for NZ Design Nos. 421383, 421384, 421385, 421386, 421387.
RIBRAFT® and Xpod™ are Firth Industries trademarks.

iMARK™
Scan to check the latest version of this document Free App on cresco.co.nz

6 TE ARA MATIPOU - FRIMLEY, HASTINGS
PROJECT

JOB	DOCUMENT	REV.	DATE	ISSUED BY
7042	F001	A	30.06.22	FPA

CRESCO
Get in touch with our team of foundation design specialists.
VISIT CRESCO.CO.NZ NOW

EDGE BEAMS AND RIBS DETAILS
DOCUMENT TITLE

SCALE	FORMAT	SHEET
1:10	A3	S7

ABA20220988
APPROVED - Site Copy
Hastings District Council
20/09/2022

1/S8 EDGE BEAM WIDTH

1:10 - TYPICAL DETAIL



TABLE A

L (mm)	RECOMMENDED SOLUTION FOR AREA TO FILL
50	FILL WITH SOLID CONCRETE (EDGE BEAM WIDTH INCREASES BY 50 mm)
100	FILL WITH SOLID CONCRETE (EDGE BEAM WIDTH INCREASES BY 100 mm)
150	- REMOVE 1 FULL POD - PLACE 2 MINIPODS - EXTEND EXTERNAL MINIPOD BY 100 mm WITH 1 ADJ POD
200	- REMOVE 1 FULL POD - PLACE 2 MINIPODS - EXTEND EXTERNAL MINIPOD BY 150 mm WITH 1 ADJ POD
250	- REMOVE 1 FULL POD - PLACE 2 MINIPODS - EXTEND EXTERNAL MINIPOD BY 200 mm WITH 1 ADJ POD
300	- REMOVE 1 FULL POD - PLACE 2 MINIPODS - EXTEND EXTERNAL MINIPOD BY 250 mm WITH 1 ADJ POD
350	- REMOVE 1 FULL POD - PLACE 2 MINIPODS - EXTEND EXTERNAL MINIPOD BY 300 mm WITH 1 ADJ POD
400	- PLACE 1 MINIPOD
450	- PLACE 1 MINIPOD (EDGE BEAM WIDTH INCREASES BY 50 mm)
500	- PLACE 1 MINIPOD - EXTEND THE MINIPOD BY 100 mm WITH 1 ADJ POD
550	- PLACE 1 MINIPOD - EXTEND THE MINIPOD BY 150 mm WITH 1 ADJ POD
600	- PLACE 1 MINIPOD - EXTEND THE MINIPOD BY 200 mm WITH 1 ADJ POD
650	- PLACE 1 MINIPOD - EXTEND THE MINIPOD BY 250 mm WITH 1 ADJ POD
700	- PLACE 1 MINIPOD - EXTEND THE MINIPOD BY 300 mm WITH 1 ADJ POD

© Cresco Copyright - Registered Designs are included within this set of plans. All right reserved.
Certificates of Registration for NZ Design Nos. 421383, 421384, 421385, 421386, 421387.
RibRaft® and Xpod® are Firth Industries trademarks.

iMARK™
Scan to check the latest version of this document Free App on cresco.co.nz

6 TE ARA MATIPOU - FRIMLEY, HASTINGS
PROJECT

JOB	DOCUMENT	REV.	DATE	ISSUED BY
7042	F001	A	30.06.22	FPA

CRESCO
Get in touch with our team of foundation design specialists.
VISIT CRESCO.CO.NZ NOW

EDGE BEAM WIDTH DETAIL — DOCUMENT TITLE
1:10 — SCALE
A3 — FORMAT
S8 — SHEET

1
S9

UNDERGROUND SERVICES

1:10 - TYPICAL DETAIL

ABA20220988
APPROVED - Site Copy
Hastings District Council
20/09/2022

SECTION ALONG THE PIPE LINE

1:10

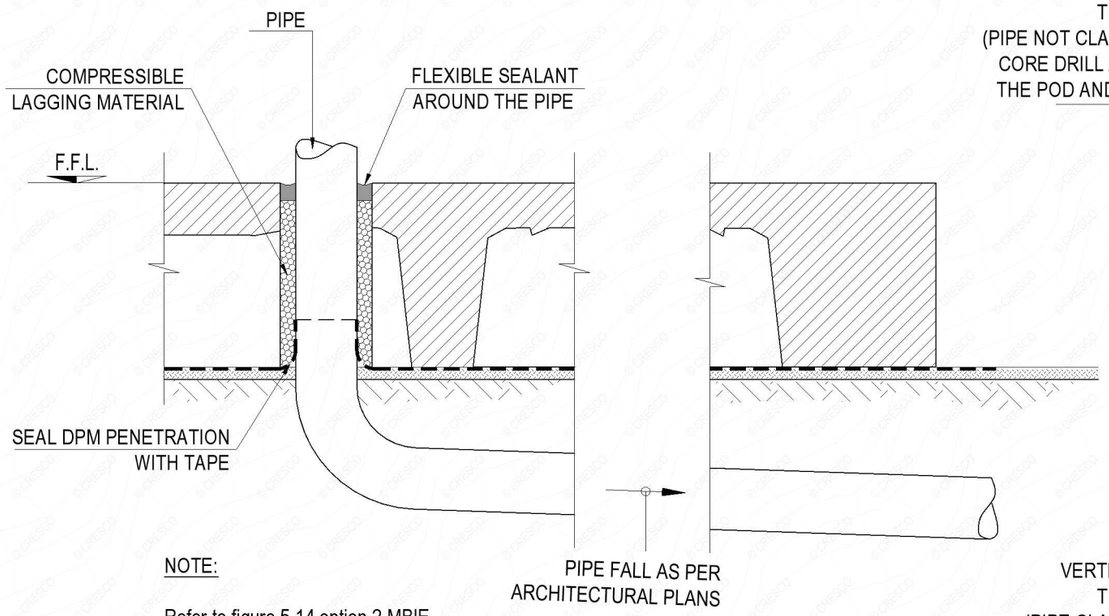

NOTE:

Refer to figure 5.14 option 2 MBIE
Part A : Technical guidance

PLAN VIEW

1:10

NOTE: Reinforcing mesh omitted for clarity

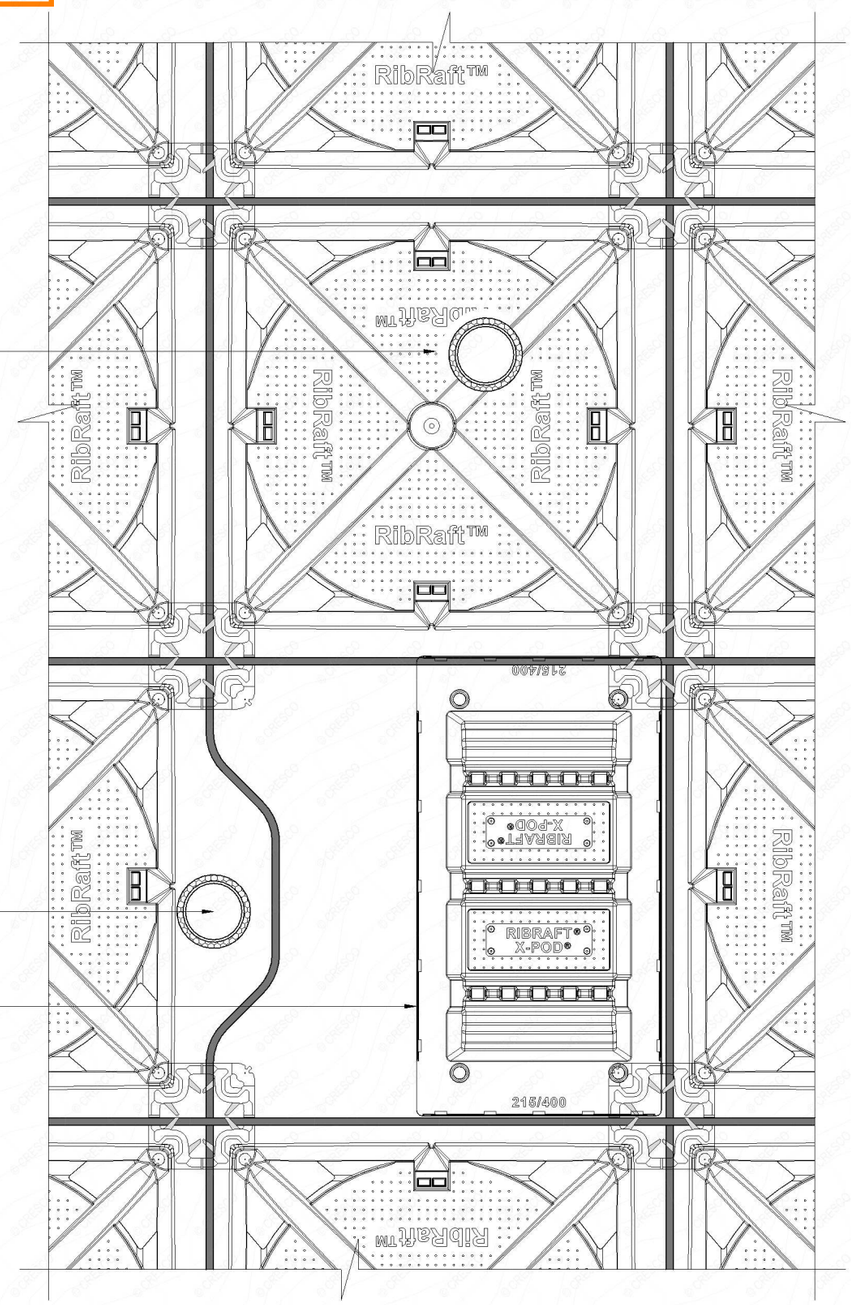

© Cresco Copyright - Registered Designs are included within this set of plans. All right reserved.
Certificates of Registration for NZ Design Nos. 421383, 421384, 421385, 421386, 421387.
RibRaft® and Xpod™ are Firth Industries trademarks.

iMARK™
Scan to check the latest version of this document Free App on cresco.co.nz

6 TE ARA MATIPOU - FRIMLEY, HASTINGS
PROJECT

JOB	DOCUMENT	REV.	DATE	ISSUED BY
7042	F001	A	30.06.22	FPA

CRESCO

Get in touch with our team of foundation design specialists.
VISIT CRESCO.CO.NZ NOW

SERVICES DETAILS - OPTION 1
DOCUMENT TITLE

1:10
SCALE

A3
FORMAT

S9
SHEET

ABA20220988
APPROVED - Site Copy
Hastings District Council
20/09/2022

1 / S10 EMBEDDED SERVICES

1:10 - TYPICAL DETAIL

SECTION ALONG THE PIPE LINE

1:10

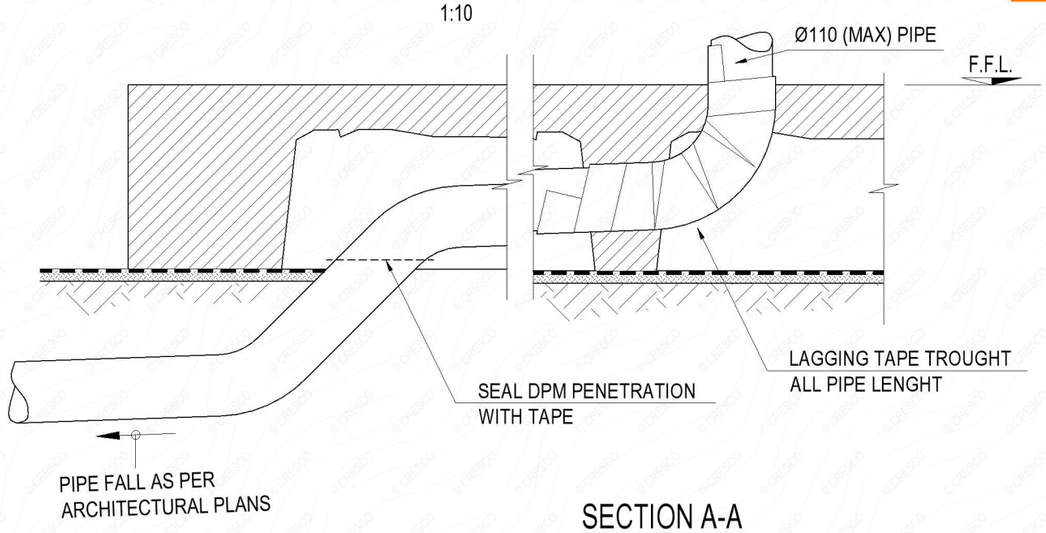

SECTION A-A

1:10

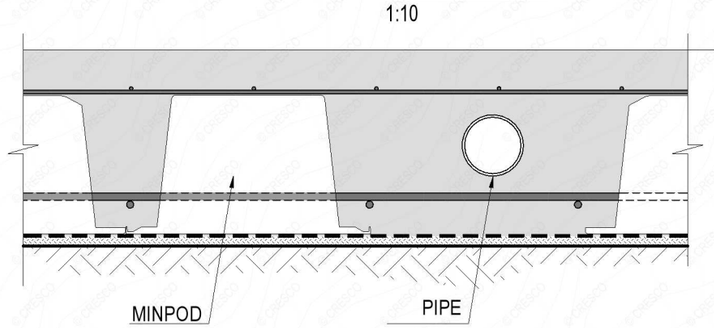

Case A
Pipe NOT clashing or
above the bottom steel

SECTION A-A

1:10

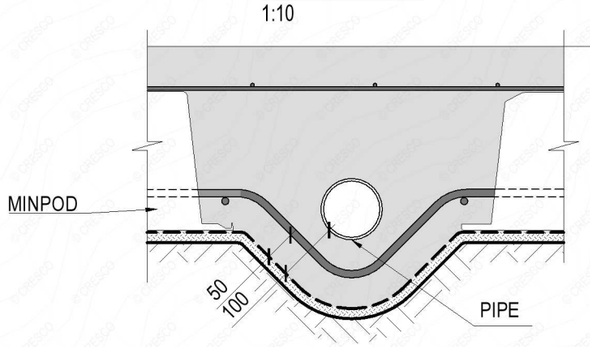

Case B
Pipe clashing or
underneath the bottom steel

PLAN VIEW

1:10

NOTE: Reinforcing mesh omitted for clarity

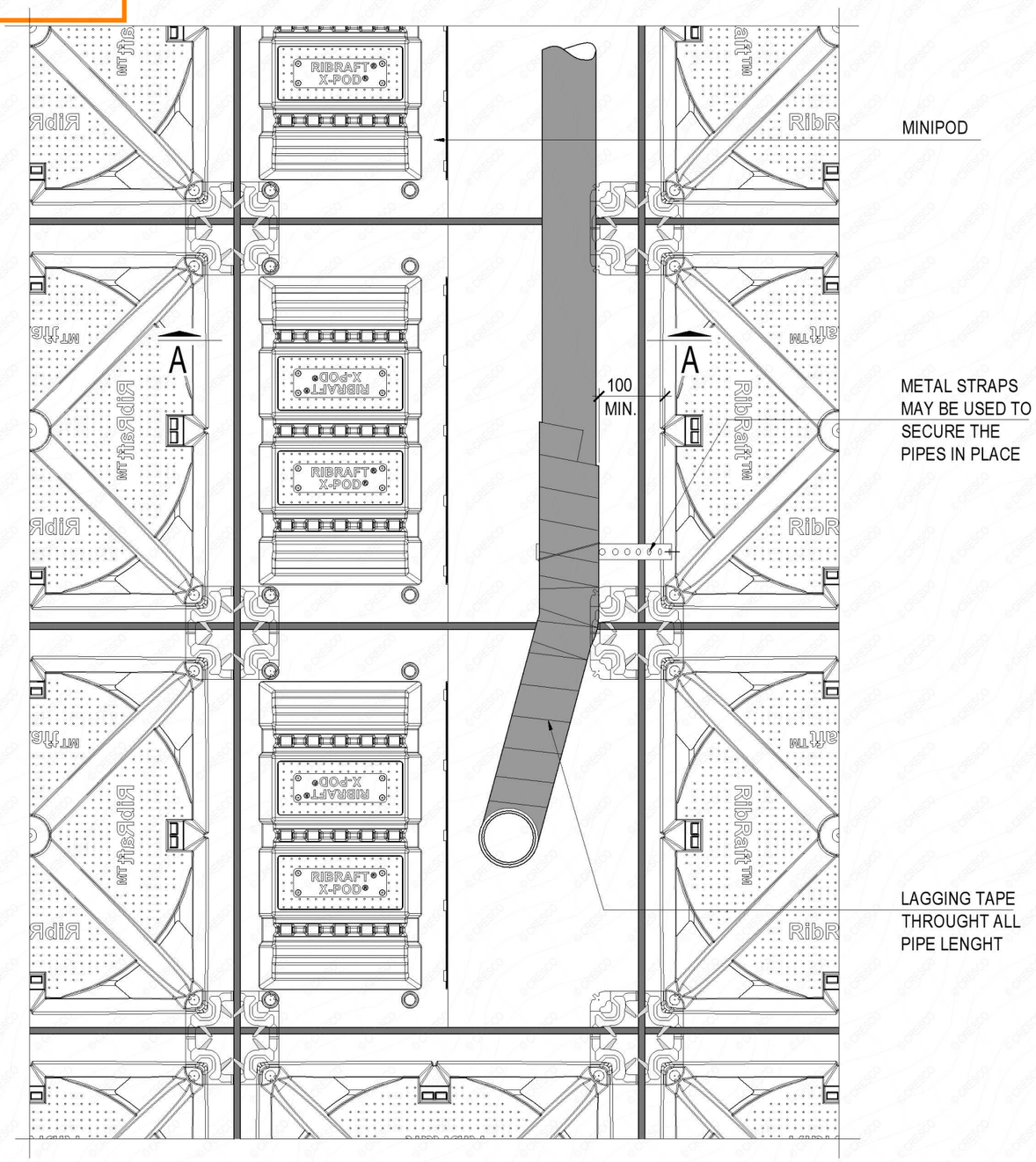

© Cresco Copyright - Registered Designs are included within this set of plans. All right rosenved.
Certificates of Registration for NZ Design Nos. 421383, 421384, 421385, 421386, 421387.
RibRaft® and Xpod® are Firth Industries trademarks.

iMARK™
Scan to check the latest version of this document Free App on cresco.co.nz

6 TE ARA MATIPOU - FRIMLEY, HASTINGS
PROJECT

JOB	DOCUMENT	REV.	DATE	ISSUED BY
7042	F001	A	30.06.22	FPA

CRESCO
Get in touch with our team of foundation design specialists.
VISIT CRESCO.CO.NZ NOW

SERVICES DETAILS - OPTION 2 — DOCUMENT TITLE

SCALE	FORMAT	SHEET
1:10	A3	S10

ABA20220988
APPROVED - Site Copy
Hastings District Council
20/09/2022



BOTTOM REINFORCING
1:10

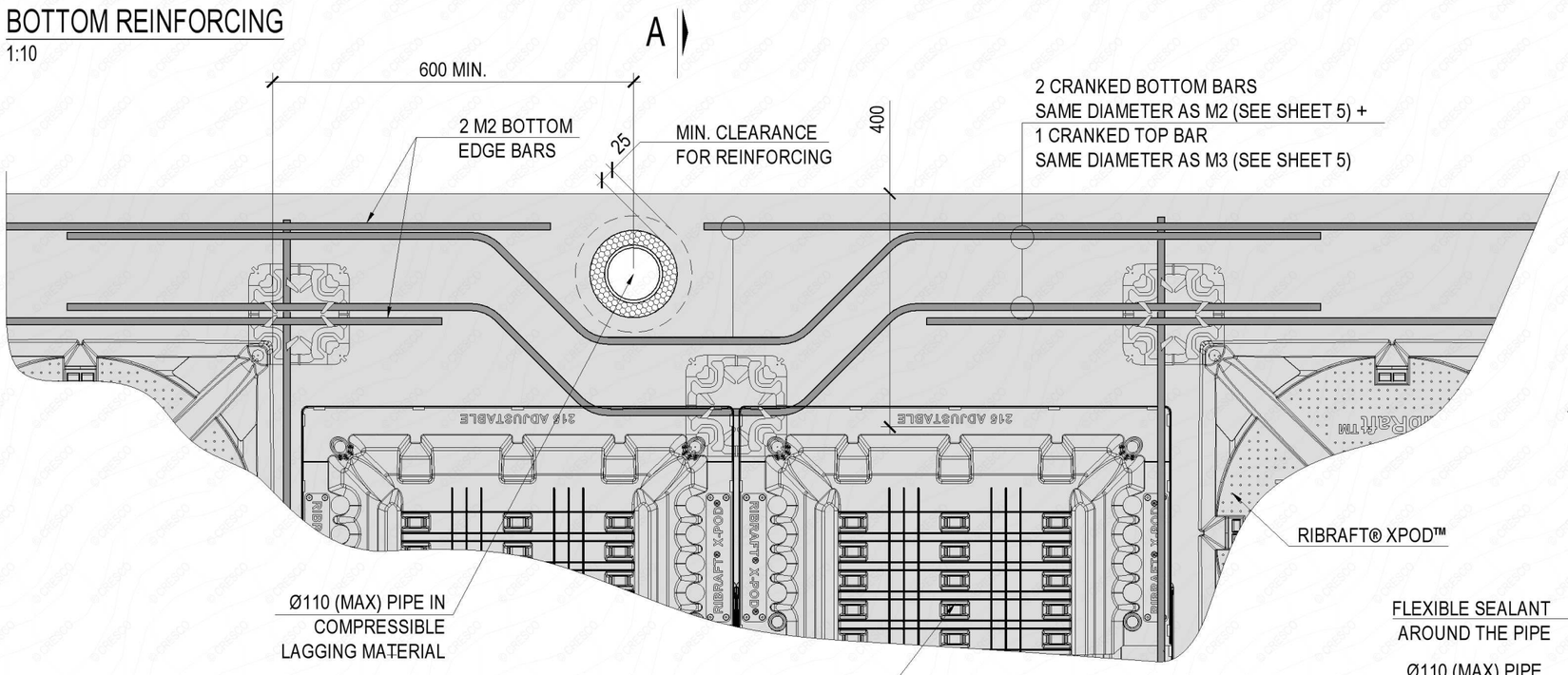

TOP REINFORCING
1:10

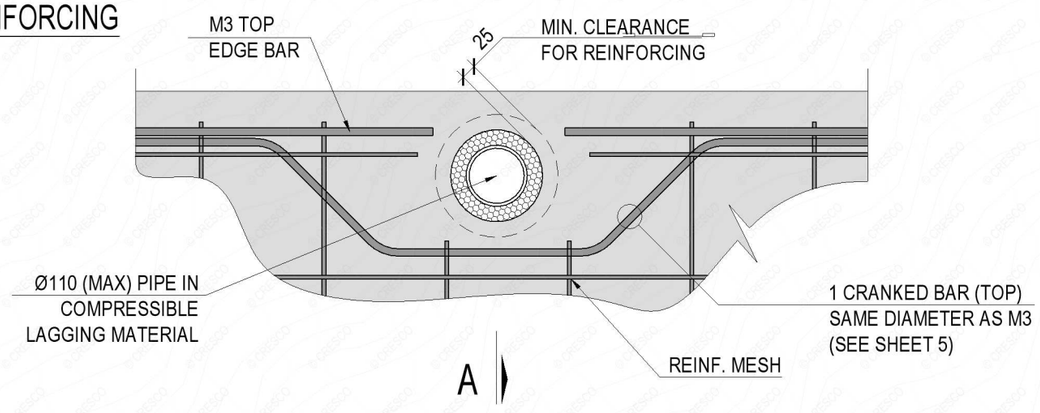

1 / S11 VERTICAL PENETRATIONS
1:10 - TYPICAL DETAIL

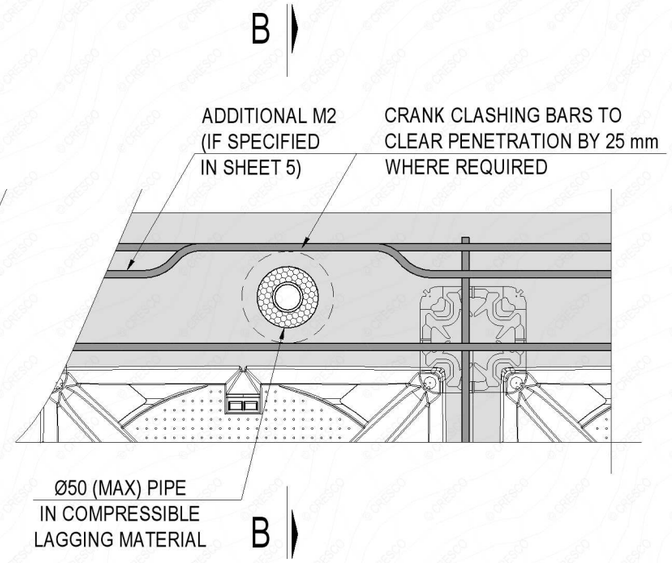

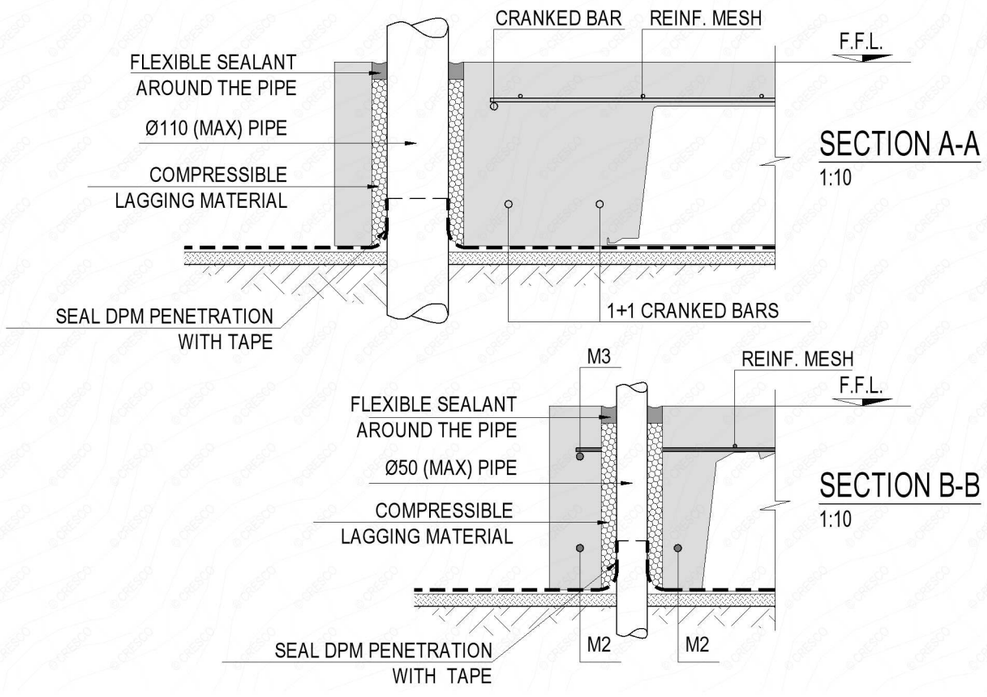

© Cresco Copyright - Registered Designs are included within this set of plans. All right reserved.
Certificates of Registration for NZ Design Nos. 421383, 421384, 421385, 421386, 421387.
RibRaft® and Xpod™ are Firth Industries trademarks.

iMARK™
Scan to check the latest version of this document Free App on cresco.co.nz

6 TE ARA MATIPOU - FRIMLEY, HASTINGS
PROJECT

JOB	DOCUMENT	REV.	DATE	ISSUED BY
7042	F001	A	30.06.22	FPA

CRESCO
Get in touch with our team of foundation design specialists.
VISIT CRESCO.CO.NZ NOW

VERTICAL PENETRATIONS DETAILS | 1:10 | A3 | S11
DOCUMENT TITLE | SCALE | FORMAT | SHEET

ABA20220988
APPROVED - Site Copy
Hastings District Council
20/09/2022

1 S12 TOP SLAB DEPTH
TYPICAL DETAIL

			A (mm)	B (mm)	C (mm)	D (mm)
STANDARD		NO MESH CHAIRS	12	61	N/A	85
		MESH CHAIRS H40	40	33	N/A	85
POLISHED CONCRETE [1]	GRINDING MAX = 3 mm	MESH CHAIRS H40	40	33	N/A	85
	GRINDING MAX = 10 mm	MESH CHAIRS H40	40	43	N/A	95
HYDRONIC UNDERFLOOR HEATING [2]		MESH CHAIRS H40	40	63	47	115
POLISHED CONCRETE AND HYDRONIC UNDERFLOOR HEATING		MESH CHAIRS H40	40	63	47	115

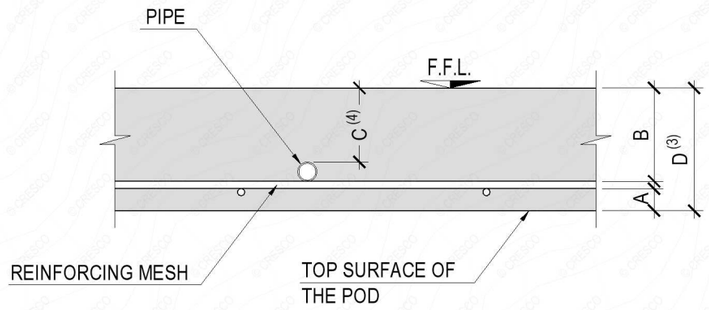

NOTES

(1) Check requirements with the architect

(2) Underfloor Heating Pipes Diameter = 16 mm
The contractor shall always check with the installer of the underfloor heating system the compliance of this detail before commencing the works.

(3) The top slab thickness might need to be increased if reinforcing steel bars are used in combination with the reinforcing mesh. Seek advice with Cresco.

(4) "C" to be at least 40 mm in correspondence of saw cuts.

(5) No saw cuts are required unless where specified in sheet 5.

(6) Not required unless specified in sheet 5.

(7) Depending on the recess requirements.

2 S12 FLOOR SAW CUT (5)
1:10 - TYPICAL DETAIL

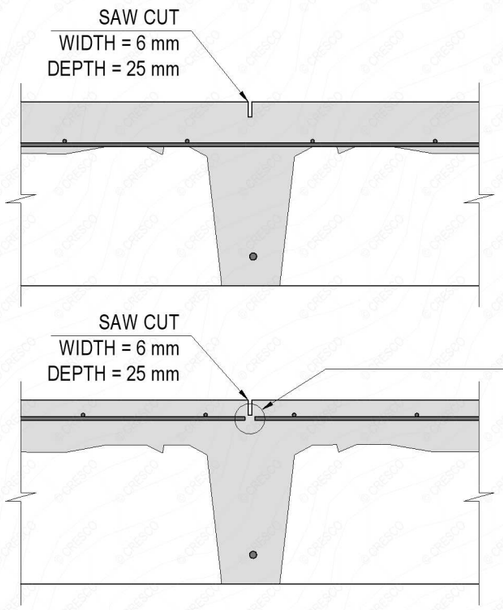

3 S12 POD DEPTH ADJUSTMENT
1:10 - TYPICAL PROCEDURE

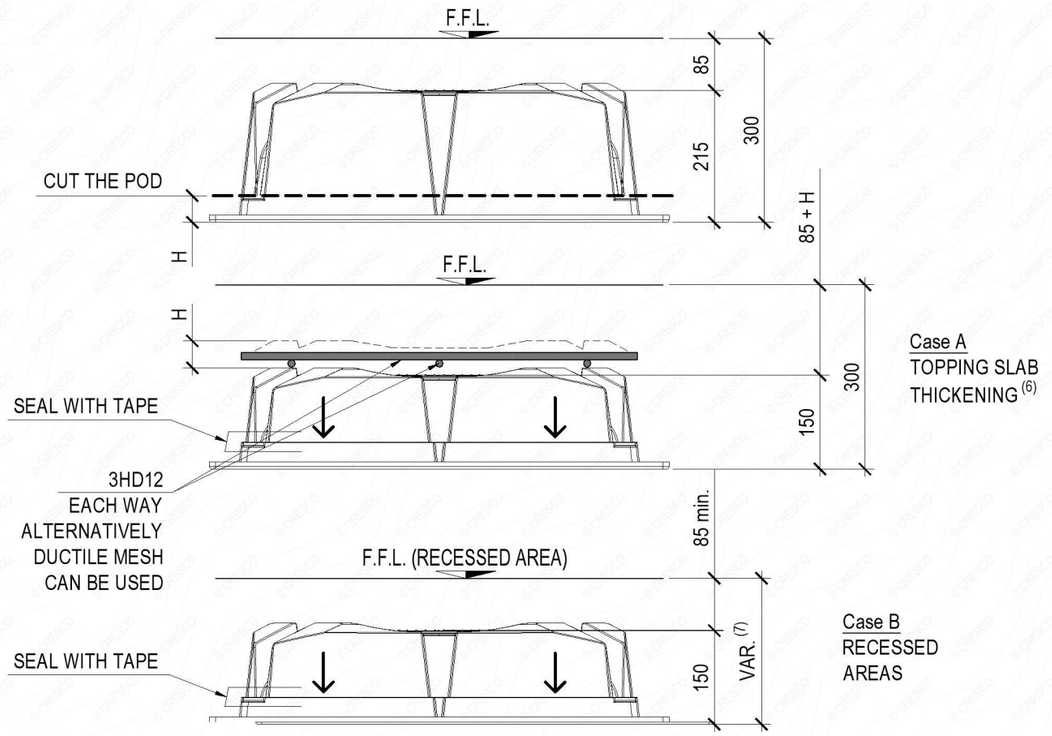

© Cresco Copyright - Registered Designs are included within this set of plans. All right reserved.
Certificates of Registration for NZ Design Nos. 421383, 421384, 421385, 421386, 421387.
RibRaft® and Xpod™ are Fifth Industries trademarks.

iMARK™
Scan to check the latest version of this document Free App on cresco.co.nz

6 TE ARA MATIPOU - FRIMLEY, HASTINGS
PROJECT

JOB	DOCUMENT	REV.	DATE	ISSUED BY
7042	F001	A	30.06.22	FPA

CRESCO
Get in touch with our team of foundation design specialists.
VISIT CRESCO.CO.NZ NOW

FOUNDATION DETAILS — DOCUMENT TITLE
1:10 — SCALE
A3 — FORMAT
S12 — SHEET

ABA20220988
APPROVED - Site Copy
Hastings District Council
20/09/2022

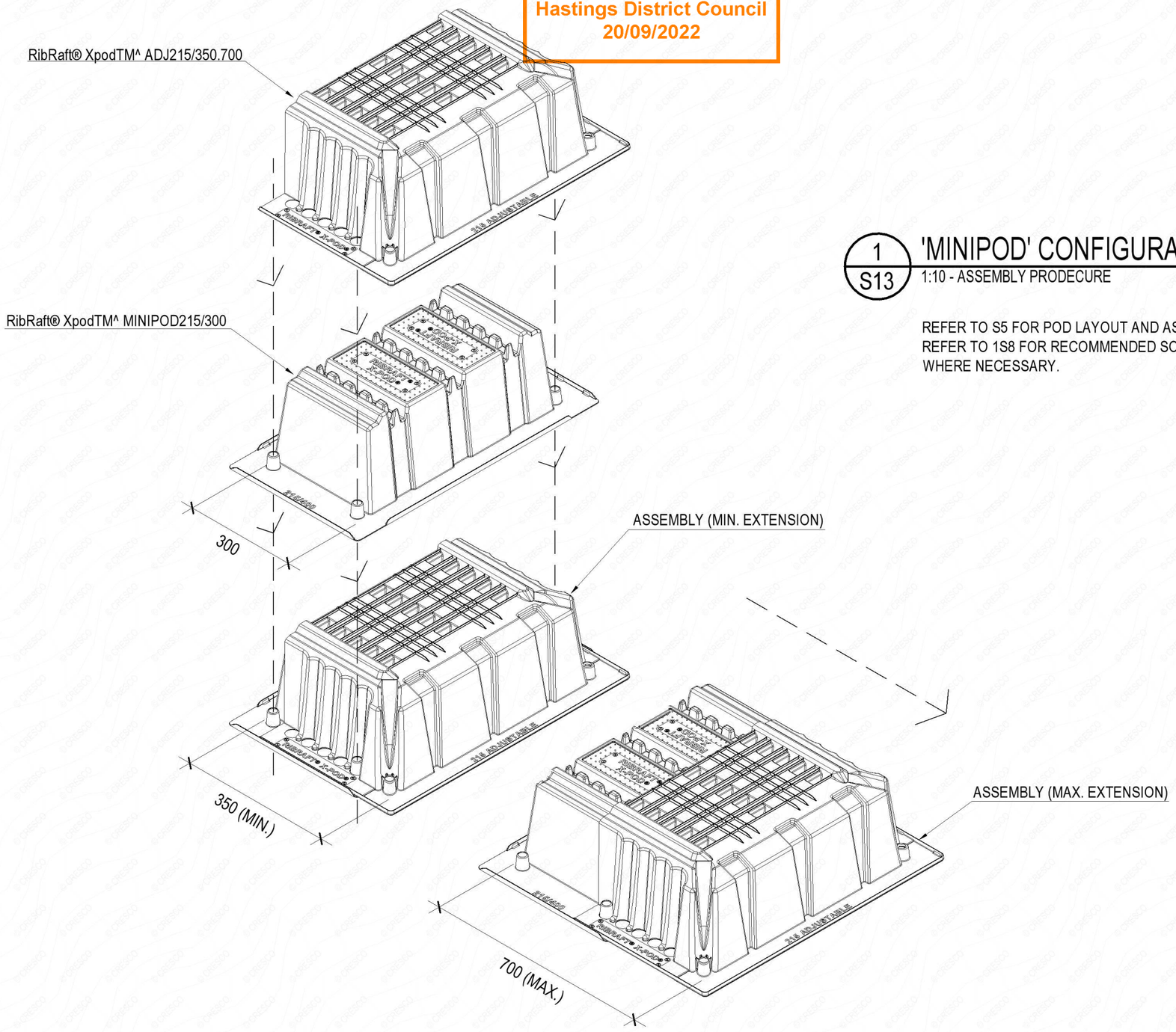

1/S13 'MINIPOD' CONFIGURATIONS

1:10 - ASSEMBLY PRODECURE

REFER TO S5 FOR POD LAYOUT AND ASSEMBLY REQUIREMENTS.
REFER TO 1S8 FOR RECOMMENDED SOLUTIONS FOR AREAS TO FILL WHERE NECESSARY.

© Cresco Copyright - Registered Designs are included within this set of plans. All right reserved.
Certificates of Registration for NZ Design Nos. 421383, 421384, 421385, 421386, 421387.
RibRaft® and Xpod® are Firth Industries trademarks.

iMARK™
Scan to check the latest version of this document Free App on cresco.co.nz

6 TE ARA MATIPOU - FRIMLEY, HASTINGS
PROJECT

JOB	DOCUMENT	REV.	DATE	ISSUED BY
7042	F001	A	30.06.22	FPA

CRESCO
Get in touch with our team of foundation design specialists.
VISIT CRESCO.CO.NZ NOW

FOUNDATION DETAILS — DOCUMENT TITLE
1:10 — SCALE
A3 — FORMAT
S13 — SHEET

ABA20220988
APPROVED - Site Copy
Hastings District Council
20/09/2022

1 S14 INTERNAL SLAB RECESS

1:10 - TYPICAL DETAIL

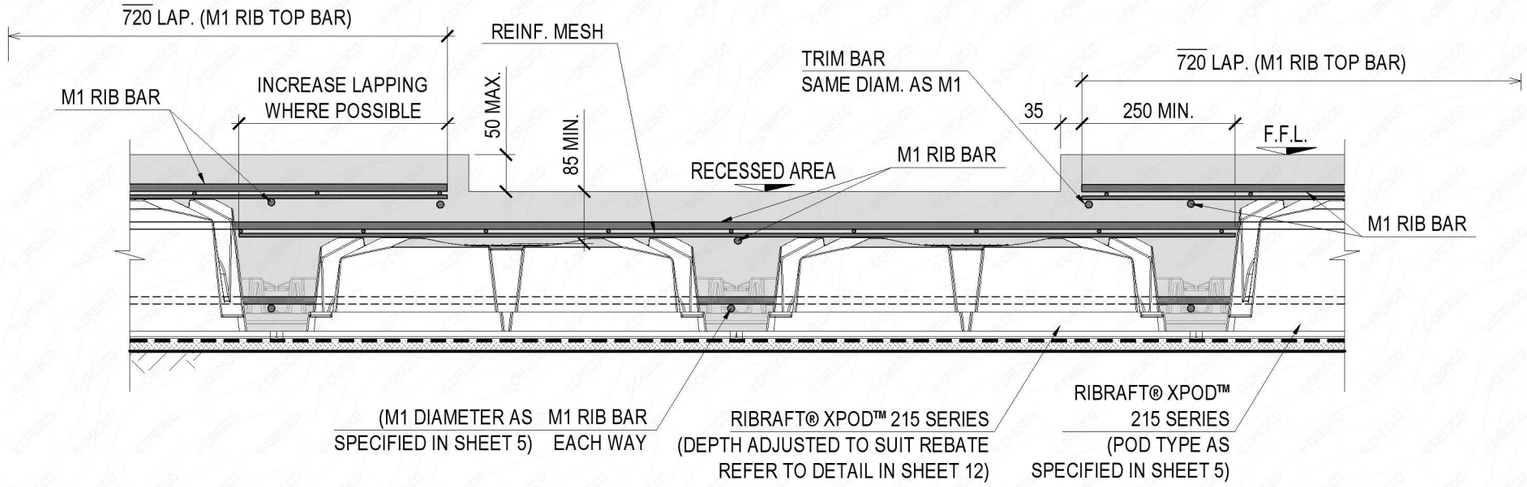

2 S14 EDGE SLAB RECESS

1:10 - EDGE DETAIL

* REFER TO ARCHITECTURAL PLANS FOR DIMENSIONS

Under no circumstances D or B shall be greater than 150 mm

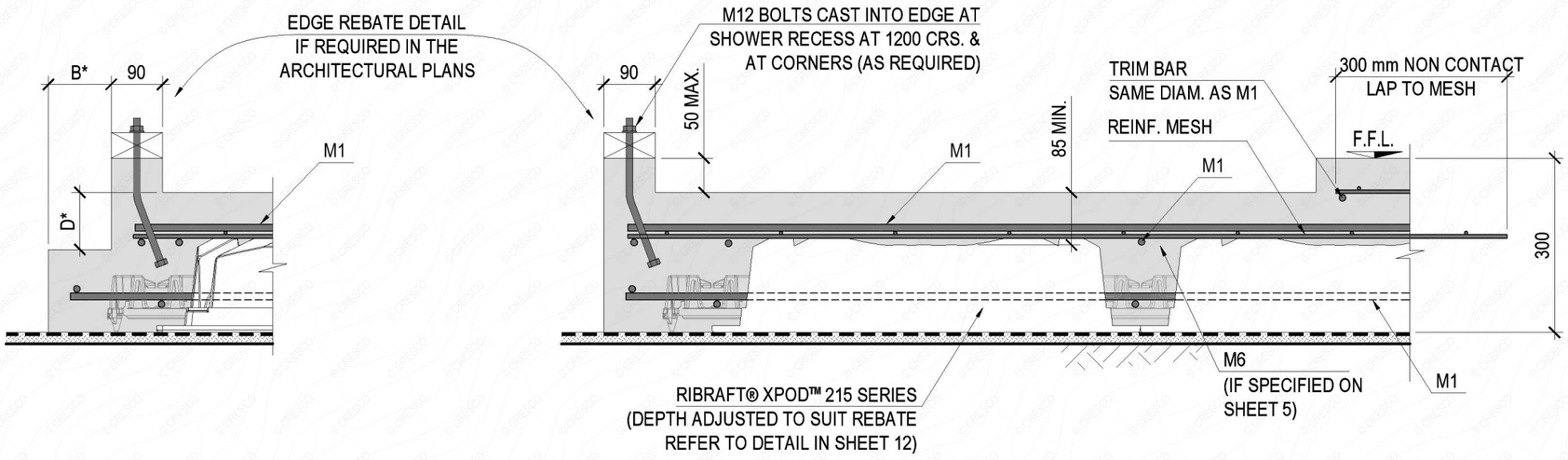

© Cresco Copyright - Registered Designs are included within this set of plans. All right reserved.
Certificates of Registration for NZ Design Nos. 421383, 421384, 421385, 421386, 421387.
RibRaft® and Xpod™ are Firth Industries trademarks.

iMARK™
Scan to check the latest version of this document Free App on cresco.co.nz

6 TE ARA MATIPOU - FRIMLEY, HASTINGS

PROJECT

JOB	DOCUMENT	REV.	DATE	ISSUED BY
7042	F001	A	30.06.22	FPA

CRESCO

Get in touch with our team of foundation design specialists.
VISIT CRESCO.CO.NZ NOW

INTERNAL SLAB RECESS — DOCUMENT TITLE

1:10 — SCALE

A3 — FORMAT

S14 — SHEET

ABA20220988
APPROVED - Site Copy
Hastings District Council
29/08/2022

1 / S15 COLUMNS PAD CONNECTION

1:10

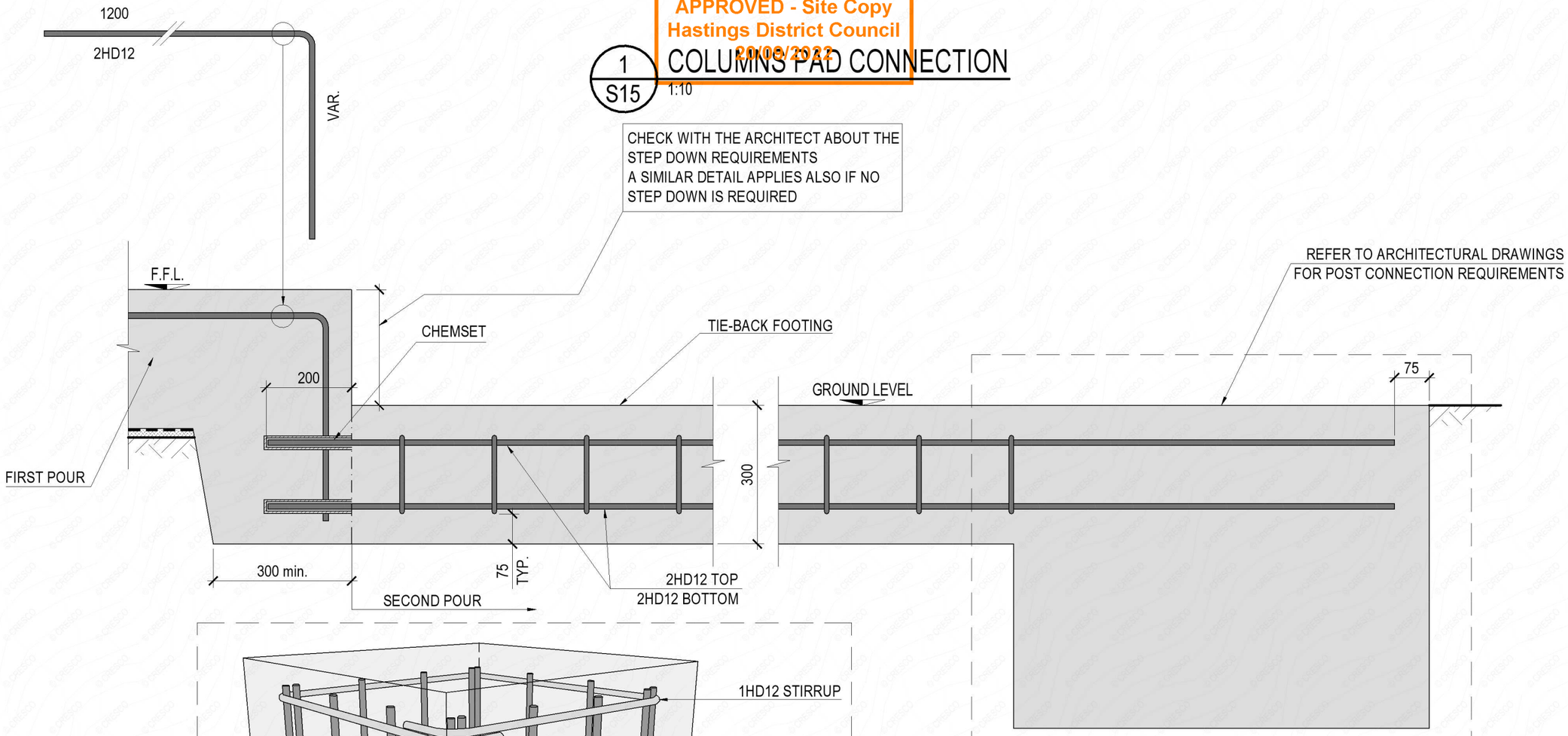

© Cresco Copyright - Registered Designs are included within this set of plans. All right reserved.
Certificates of Registration for NZ Design Nos. 421383, 421384, 421385, 421386, 421387.
RibRaft® and Xpod® are Firth Industries trademarks.

iMARK™
Scan to check the latest version of this document Free App on cresco.co.nz

6 TE ARA MATIPOU - FRIMLEY, HASTINGS
PROJECT

JOB	DOCUMENT	REV.	DATE	ISSUED BY
7042	F001	A	30.06.22	FPA

CRESCO
Get in touch with our team of foundation design specialists.
VISIT CRESCO.CO.NZ NOW

R.C. PAD DETAIL — DOCUMENT TITLE

SCALE	FORMAT	SHEET
1:10	A3	S15

CRESCO
www.cresco.co.nz

ABA20220988
APPROVED - Site Copy
Hastings District Council
20/09/2022



Inventors of the technology behind the RibRaft® Xpod™.

We are the best for keeping your foundation costs down as we know the RibRaft® Xpod™ Foundation System best.

CALCULATION NOTE

iMARK™
Scan to check the latest version of this document Free App on cresco.co.nz

6 TE ARA MATIPOU - FRIMLEY, HASTINGS
PROJECT

JOB	DOCUMENT	REV.	DATE	ISSUED BY
7042	C001	A	30.06.22	FPA

ABA20220988
APPROVED - Site Copy
Hastings District Council
20/09/2022

PATHWAY TO COMPLIANCE FOR SPECIFIC ENGINEERING DESIGN OF FOUNDATION

Cresco Engineers New Zealand Limited has been engaged to provide engineering design services in respect of Clause B1 of the New Zealand Building Code (NZBC) for the foundation of the building at the address shown on the cover of this document.

The proposed foundation consists in a **RibRaft® Xpod™ 215/750** waffle raft designed in accordance with the Structural Designers Guide issued by Firth Industries and further clarifications provided by Firth in regards to the minimum concrete topping thickness.

For this specific design, the Verification Method that has been adopted to demonstrate compliance with NZBC consists of AS/NZS 1170 used in conjunction with the relevant cited material standards as modified by Verification Method B1/VM1, B1/VM4, B1/AS1 and MBIE/NZGS Module 4 “Earthquake resistant foundation design”.

The design provides the minimum value of the un-factored Ultimate Bearing Capacity (UBC) of the ground required across the entire building platform. As specified within the design and PS1, the soil performance is subject to site verification.

For pressure checks under short-term and long-term loadings, a 50% and a 33% strength reduction factor has been used respectively.

When the pressure calculated immediately underneath the foundation is above and beyond the limits that have been set out by the geotechnical engineer and no specific recommendations are given, Cresco provides the design of a compacted granular fill to be placed beneath the foundation.

The depth (D) of the granular fill is calculated to ensure that at the interface of the granular fill with the natural soil, the pressure, obtained with the Boussinesq theory or the distribution of stresses in a half-space resulting from surface loads, complies with the Ultimate Bearing Capacity (UBC) that is inferred at that level.

“D” (applicable also for D = 0 mm) is intended to be read as:

“the required depth of the compacted granular fill beneath the foundation for a specified value of the ground Ultimate Bearing Capacity (immediately underneath the granular fill and subject to site verification) in absence of any unfavorable condition such as: (a) potentially compressible ground such as top soil, soft soils such as very soft clays which can be moulded easily in the fingers, and un-compacted loose gravel which contains obvious voids (b) expansive soils being those that have a liquid limit of more than 50 % when tested in accordance with NZS 4402 Test 2.2, and a linear shrinkage of more than 15 % when tested from the liquid limit in accordance with NZS 4402 Test 2.6; and (c) any ground which could foreseeably experience movement of 25 mm or greater for any reason including one or a combination of land instability, ground creep, subsidence, seasonal swelling and shrinking, frost heave, changing groundwater level, erosion, dissolution of soil in water, and effects of tree roots”.

ABA20220988
APPROVED - Site Copy
Hastings District Council
20/09/2022

The investigation of the above mentioned unfavorable conditions as well as the remediation works to be undertaken (for example, but not limited: cut of the top soil, any groundworks that may extend beyond the depth of the granular fill indicated by us, deep ground improvements of any kind...) are outside of the scope of the Design.

The Design is not intended to alter or substitute the instructions contained in a geotechnical report when available and it is under the responsibility of the Client to undertake the necessary actions to assess the suitability of the ground in the respect of the unfavorable conditions listed above.

The foundation has been designed to be capable of resisting tension effects from nominal lateral spreading and of accommodating settlement of the ground beneath the house in accordance to the instructions provided by the Ministry of Business, Innovation & Employment (MBIE) Guidance - Version 3, dated December 2012 - "Repairing and rebuilding houses affected by the Canterbury earthquakes" and subsequent updates for sites classified as **TC2**.

The RibRaft® Xpod™ 215/750 is similar but not identical to Clause 5.3 Option 4 of the MBIE Guidance.

Specific design considerations allowed a reduction of the overall depth of the foundation notwithstanding the compliance of the structure with New Zealand regulations and performance set out at clause 5.4 of the MBIE Guidance.

In particular, the foundation shall be able to bridge a length of up to 4 m of settled soil (or sudden lack of support) beneath the foundation and cantilever a distance of up to 2 m over settled soil at the building footprint extremities, within acceptable deformation limits.

Five load cases representing the five worst cases for a loss of support have been analyzed for Ultimate Limit State strength (ULS) and Serviceability Limit State deformations (SLS).

Load case 1: 2 m loss of the edge bearing support along the edge beam length. Cantilever rib checks.
Load case 2: 2 m loss of the edge bearing support at the corners of the edge beam. Edge beam cantilever checks.
Load case 3: 4 m loss of internal bearing support parallel to a bearing wall. Rib or stiffening checks.
Load case 4: 4 m loss of internal bearing support perpendicular to a bearing wall. Rib or stiffening checks.
Load case 5: 4 m loss of the edge bearing support along the edge beam length. Edge beam checks.

The five load cases have been illustrated in a diagram, where:

L_R = length of the cantilever or beam span
G_{gf} = total ground floor permanent load
g_{EF} = edge beam permanent load
g_{EFS} = edge beam self-weight
g_{BW} = bearing wall permanent load
q_{BW} = bearing wall imposed load
Q = ground floor imposed load

The construction of the foundation are to be carried out under the supervision of Cresco or its nominated agent in accordance to the Inspection Schedule provided within the design.

ABA20220988
APPROVED - Site Copy
Hastings District Council
20/09/2022

LOAD CASE 1

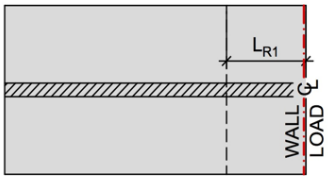

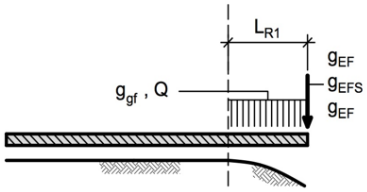

LOAD CASE 2

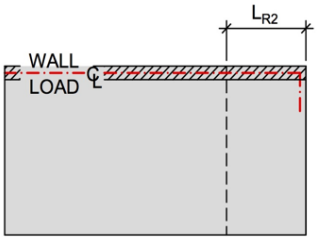

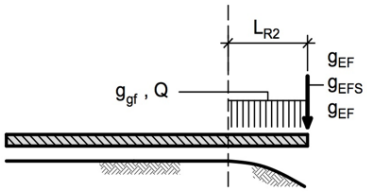

LOAD CASE 3

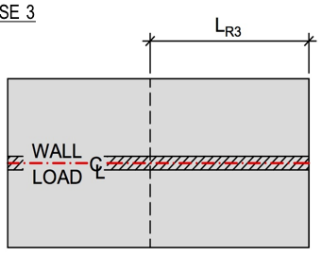

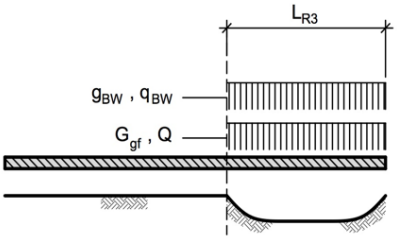

LOAD CASE 4

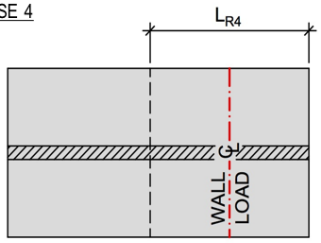

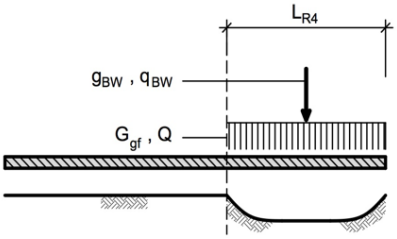

LOAD CASE 5

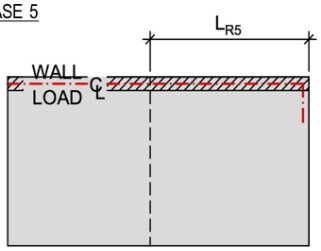

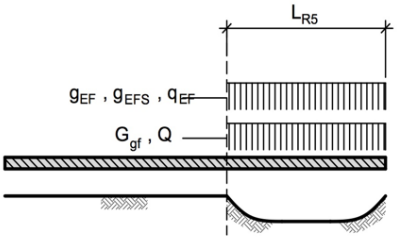

ABA20220988
APPROVED - Site Copy
Hastings District Council
20/09/2022

DISCLAIMER

Only our Client and the Local and Regional Territorial Authorities are entitled to rely upon this design. Cresco Engineers New Zealand Limited accepts no liability to anyone other than the Client in any way in relation to this document and the content of it and any direct or indirect effect this calculation note may have. Cresco does not contemplate anyone else relying on this design or that it will be used for any other purpose.

Cresco Engineers New Zealand Limited does not accept any responsibility for any indirect effect this design may have in consequence of inaccurate information provided by the Client of his appointees.

On behalf of
Cresco Engineers New Zealand Limited

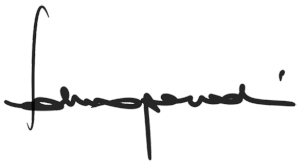

Fabio Parodi
(CPEng n. 1025559)

ABA20220988
APPROVED - Site Copy
Hastings District Council
20/09/2022

CRESCO ENGINEERS NEW ZEALAND LTD
P O BOX 9200, Addington, Christchurch 8149
T +64.27.838.8338 web: www.cresco.co.nz

Building Code Clause(s) **B1**

PRODUCER STATEMENT – PS1 – DESIGN

ISSUED BY (Design Firm):	**CRESCO ENGINEERS NEW ZEALAND LIMITED**
TO (Owner/Developer):	**REDSHAW HOMES**
TO BE SUPPLIED TO (Building Consent Authority):	**Hastings District Council**
IN RESPECT OF (Description of Building Work):	**Residential Foundation**
AT (Street Address): (Town/city):	**6 TE ARA MATIPOU FRIMLEY, HASTINGS**
	LOT: **33** DP: SO:

We have been engaged by the owner/developer referred to above to provide **Residential Foundation design services** in respect of the requirements of Clause(s) **B1** of the Building Code for All ☒ or Part only ☐ (as specified in the attachment to this statement), of the proposed building work.

The design carried out by us has been prepared in accordance with:

☒ Compliance Documents issued by the Ministry of Business, Innovation & Employment **VM1, VM4**
☐ Alternative solution as per the attached schedule:

The proposed building work covered by this producer statement is described on the documents titled **7042 - F001_A** and **7042 - C001_A**; together with the specification, and other documents set out in the schedule attached to this statement (if any).
On behalf of the Design Firm, and subject to:
(i) All proprietary products meeting their performance specification requirements;
(ii) Site verification of the following design assumptions: **Geotechnical Report Ref. 1062 REV 0 dated MARCH 2022 , by INITIA Geotechnical Specialists.**

I **believe on reasonable grounds** that a) the structure, if constructed in accordance with the drawings, specifications, and other documents provided or listed in the attached schedule, will comply with the relevant provisions of the Building Code and that b), the persons who have undertaken the design have the necessary competency to do so. I also recommend the following level of construction monitoring/observation:
☐CM1 ☐CM2 ☒CM3 ☐CM4 ☐CM5 (Engineering Categories) or ☐ as per agreement with owner/developer (Architectural)

I, **Fabio Parodi** hold ☒ CPEng registration No. **1025559**

I am a Member of : ☒ ENGINEERING NEW ZEALAND and hold the following qualifications: **CPEng, Dott. Ing (ITA), M.Eng (Hons)**

The Design Firm issuing this statement holds a current policy of Professional Indemnity Insurance no less than $500,000*.

SIGNED BY **FABIO PARODI** ON BEHALF OF **CRESCO ENGINEERS NEW ZEALAND LIMITED**



(signature)

Date: 30/06/22

Note: This statement shall only be relied upon by the Building Consent Authority named above. Liability under this statement accrues to the Design Firm only. The total maximum amount of damages payable arising from this statement and all other statements provided to the Building Consent Authority in relation to this building work, whether in contract, tort or otherwise (including negligence), is limited to the sum of $500,000.*

ABA20220988
APPROVED - Site Copy
Hastings District Council
20/09/2022

CRESCO ENGINEERS NEW ZEALAND LTD
P O BOX 9200, Addington, Christchurch 8149
T +64.27.838.8338 web: www.cresco.co.nz

Important Advisory Note

Cresco Engineers New Zealand Limited (Cresco) is supplying Producer Statements to be submitted to territorial or building consent authorities in order for Code of Compliance Certificates to be issued.

Producer statements are not a product warranty or guarantee of compliance.
Producer statements deal with compliance at the date on which they were written. They will not necessarily provide assurance of on-going compliance.

The design provided by Cresco and covered under this Producer Statement (Design) cannot be used by any third party and cannot be used if there are changes in the laws or regulations.

Only the Owner/Developer, and the Building Consent Authority are entitled to rely upon this Design. Cresco accepts no liability to anyone other than the Owner/Developer in any way in relation to the Design and the content of it and any direct or indirect effect this Design may have. Cresco does not contemplate anyone else relying on this Design or that it will be used for any other purpose.

The Design is based upon information provided by the Owner/Developer or his representatives and no warranty is included; either expressed or implied that the actual site conditions and forces generated by structures designed by others will conform to the information that Cresco has received.

When the Design includes foundation design, the check for the pressure generated by the foundation onto the ground is provided. When the pressure is above and beyond the values indicated in the geotechnical report / site tests provided by the Owner/Developer, the Design includes the calculation of the depth of the compacted granular fill required to comply.

The Granular Fill Required Depth (D) is intended to be read as:
"the required depth of the compacted granular fill beneath the foundation for a specified value of the ground Ultimate Bearing Capacity (immediately underneath the granular fill and subject to site verification) in absence of any unfavorable condition such as: (a) potentially compressible ground such as top soil, soft soils such as very soft clays which can be moulded easily in the fingers, and un-compacted loose gravel which contains obvious voids (b) expansive soils being those that have a liquid limit of more than 50 % when tested in accordance with NZS 4402 Test 2.2, and a linear shrinkage of more than 15 % when tested from the liquid limit in accordance with NZS 4402 Test 2.6; and (c) any ground which could foreseeably experience movement of 25 mm or greater for any reason including one or a combination of land instability, ground creep, subsidence, seasonal swelling and shrinking, frost heave, changing groundwater level, erosion, dissolution of soil in water, and effects of tree roots".

The investigation of the above mentioned unfavorable conditions as well as the remediation works to be undertaken (for example, but not limited: cut of the top soil, any groundworks that may extend beyond the depth of the granular fill indicated by us, deep ground improvements of any kind…) are outside of the scope of the Design.
The Design is not intended to alter or substitute the instructions contained in a geotechnical report when available and it is under the responsibility of the Client to undertake the necessary actions to assess the suitability of the ground in the respect of the unfavorable conditions listed above.

The PS1 (Producer Statement - Design) is intended for use by a suitably qualified, competent design professional (i.e. Chartered Professional Engineer) as a statement of opinion. The opinion is based on reasonable grounds that certain aspects of proposed building work will comply with the Building Code, if the work is constructed according to the referenced documentation (e.g. engineering design drawings and specifications).
The PS1 records the means of compliance e.g. the Acceptable Solution or Verification Method used and it only covers specifically designed building elements or specifically designed portions / strengthening of building elements. The Chartered Professional Engineer signatory of the Producer Statements does not provide professional opinion for means of compliance of construction elements designed/completed in accordance with design/construction procedures contained within technical manuals of proprietary systems.

The PS4 (Producer Statement - Construction Review) is intended for use by a suitably qualified, competent design professional as a statement of opinion. This is based on reasonable and stated grounds which may include the records of construction monitoring and information supplied by (i) the contractor (ii) by a person acting under the control of the Chartered Professional Engineer or (iii) collected by the Chartered Professional Engineer himself, that certain aspects of building work have been completed according to the building consent and amendments.

It is under the responsibility of the Owner / Developer's agent or contractor to notify Cresco when site observations are to be required. Cresco strongly recommends to provide sufficient notice (at least 5 working days) prior to time of site observation.
The records of construction monitoring and instructions (including authorization to proceed with concrete pouring when applicable) are provided, upon Chartered Professional Engineer's review and approval, generally within 24 hours from the date of the site observation.

A Chartered Professional Engineer nominated by Cresco will issue a PS4 if the building works have been completed (i) in accordance with the relevant requirements of the Building Consent and Building Consent Amendments, (ii) in compliance with the structural documentation and if (iii) at least all construction monitoring visits recommended within the inspection schedule as stated on the consent documents have been carried out by inspectors appointed by Cresco.
Cresco is unable to providing site observation for unauthorized and non-consent works.

Should anyone wish to discuss the content of this Design with Cresco Engineers New Zealand Limited, they are welcome to contact us on **0800 11 33 11** or support@cresco.co.nz.

ABA20220988
APPROVED - Site Copy
Hastings District Council
20/09/2022

CRESCO INTERNATIONAL LTD
P O BOX 9200, Addington, Christchurch 8149
T +64.27.838.8338 web: www.cresco.co.nz

Form 2A

Memorandum from licensed building practitioner: Certificate of design work
Section 45 and Section 30C, Building Act 2004

THE BUILDING

Street address: **6 TE ARA MATIPOU**

Town/City: **FRIMLEY, HASTINGS**

THE OWNER / DEVELOPER

Name(s): **REDSHAW HOMES**

BASIS FOR PROVIDING THIS MEMORANDUM

I am providing this memorandum in my role as the: *Tick* ☒ *if included* ☐ *if excluded*	
☐	**sole** designer of all of the RBW design outlined in this memorandum – I carried out all of the RBW design myself – no other person will be providing any additional memoranda for the project
☐	**lead** designer who carried out some of the RBW design myself but also supervised other designers – this memorandum covers their RBW design work as well as mine, and no other person will be providing any additional memoranda for the project
☐	**lead** designer for all but specific elements of RBW – this memorandum only covers the RBW design work that I carried out or supervised and the other designers will provide their own memoranda relating to their specific RBW design
☒	**specialist** designer who carried out specific elements of RBW design work as outlined in this memorandum – other designers will be providing a memorandum covering the remaining RBW design work

IDENTIFICATION OF DESIGN WORK THAT IS RESTRICTED BUILDING WORK (RBW)

I, **Fabio Parodi**, ~~carried out~~ / supervised the following design work that is restricted building work

PRIMARY STRUCTURE: B1

Design work that is restricted building work	**Description**	**Carried out/ supervised**	**Reference to plans and specifications**
Primary structure			
All RBW Design work relating to B1 ☐		☐ Carried out ☐ Supervised	
Foundations and subfloor framing ☒	*Residential Foundation Design Services*	☐ Carried out ☒ Supervised	*See PS1*
Walls ☐		☐ Carried out ☐ Supervised	
Roof ☐		☐ Carried out ☐ Supervised	

ABA20220988
APPROVED - Site Copy
Hastings District Council
20/09/2022

CRESCO ENGINEERS NEW ZEALAND LTD
P O BOX 9200, Addington, Christchurch 8149
T +64.27.838.8338 web: www.cresco.co.nz

Columns and beams ☐		☐ Carried out ☐ Supervised	
Bracing ☐		☐ Carried out ☐ Supervised	
Other ☐		☐ Carried out ☐ Supervised	

ISSUED BY

Name: **Fabio Parodi**	LBP or Registration number: **1025559**
The practitioner is a: ☐ Design LBP ☐ Registered architect ☒ Chartered professional engineer	
Design Entity or Company: **CRESCO ENGINEERS NEW ZEALAND LIMITED**	
Mailing address (if different from below): **PO Box 9200 8149 Addington Christchurch**	
Street address / Registered office: **c.o. M J Mowat, 290 Clyde Road**	
Suburb: **Bryndwr**	Town/City: **Christchurch**
PO Box/Private Bag: **N/A**	Postcode: **8053**
Phone number: **N/A**	Mobile: **027 838 8338**
After Hours: **N/A**	Fax: **N/A**
Email address: **f.parodi@cresco-group.com**	Website: **www.cresco.co.nz**

DECLARATION

I **Fabio Parodi** [*name of practitioner*] , LBP,

state that I have applied the skill and care reasonably required of a competent design professional in carrying out or supervising the Restricted Building Work (RBW) described in this form, and that based on this, I also state that the RBW:

- Complies with the building code; or
- ~~Complies with the building code subject to any waiver or modification of the building code recorded on this form.~~

Signature: 

Date: 30/06/22

ABA20220988
APPROVED - Site Copy
Hastings District Council
20/09/2022

CRESCO ENGINEERS NEW ZEALAND LTD
P O BOX 9200, Addington, Christchurch 8149
T +64.27.838.8338 web: www.cresco.co.nz

To
Hastings District Council
Building Consent Authority

30/06/22

Dear Sir / Madam,

B2 Compliance

Residential Foundation at 6 TE ARA **MATIPOU***, FRIMLEY*, **HASTINGS**

We are not able to supply a Producer Statement for Design in respect of the requirements of Clause(s) **B2** of the Building Code since there is no effective verification method for this Clause within the Building Code.

However, we can confirm that for the structural elements shown in our documentation:

Timber
Timber treatment has been selected in accordance with Table 1A of B2/AS1.

Concrete
Concrete covers have been selected in accordance with NZS3101, Part 1, Section 3.

Mild Steel
Generally, steel member/connections requirements as per NZS3604:2011 or proprietary coatings to comply with AS/NZS2312. Otherwise, steel protection has been specified in accordance with the 'Guide to the protection of structural steel against atmospheric corrosion by the use of protective coatings' AS/NZS 2312. We note that this is on a time to first maintenance basis.

We trust this provides the information that you are seeking.

Yours faithfully,



Fabio Parodi
Cresco Engineers New Zealand Limited

ABA20220988
APPROVED - Site Copy
Hastings District Council
20/09/2022

CRESCO

COMPANY PROFILE

ABA20220988
APPROVED - Site Copy
Hastings District Council
20/09/2022

CRESCO

Structural engineers with global expertise.

WATCH CRESCO GROUP SHOW REEL

Specialized. We are structural engineers specialized in foundation and steel structure designs for residential, commercial, industrial and infrastructure constructions.

International network. We provide the best engineering solutions to suit local needs by sharing knowledge and fostering cooperation across our international network of experts. Through the years we have completed high scale projects in 32 countries.

Customer oriented. We value relationships with our Customers and we always provide a tailored and personal service. Our teams are sized and managed to ensure prompt action. We have been able to handle complex high scale projects up to monthly workloads of 8,000 hrs.

Working around the clock. We can handle tight deadlines by coordinating by our teams of engineers in Europe and Australasia.



ABA20220988
APPROVED - Site Copy
Hastings District Council
20/09/2022



ABA20220988
APPROVED - Site Copy
Hastings District Council
20/09/2022

Performing in all ground conditions.

VISIT CRESCO.CO.NZ

The Armadillo™ Foundation System is a new construction method to build **robust, cost effective, environmentally smart waffle** shaped foundations for heavy duty applications (e.g. multi-storey appartments, commercial buildings...) or for constructions on grounds for specific conditions (e.g. soft, liquefiable, highly expansive...)

The Armadillo™ Foundation System is far **the strongest proprietary foundation system** available in New Zealand and, in most cases, it is **more cost effective** than other foundation options as it eliminates time-consuming activities on site.

Freight costs are also reduced, as all the components are stackable and **easily transportable**.

The Armadillo™ Foundation System can be used as a robust and stiff shallow raft or supported on deep piles.

The **Piletop™ technology** allows an effective horizontal decoupling between the slab and the deep piles.



Residential Development on liquefiable ground (TC3)

Armadillo 500™ Foundation with Piletop™ 300 on piles.

Kaiapoi (New Zealand)

ABA20220988
APPROVED - Site Copy
Hastings District Council
20/09/2022

Trusted partners for remarkable projects.

WATCH A VIDEO ABOUT AEROVILLE

Cresco has been involved in the engineering design of high-value commercial buildings.

Aeroville is a 355 million euros Unibail Rodamco project hosting 200 shops, 30 restaurants, 12 Europacorp Cinemas and a 15,000 m2 Auchan supermarket.

Cresco undertook the detailed engineering of all the steel structures of the mall optimising the original design provided by the Client and allowing a 20% reduction of steel weight.

For this project, Cresco issued about 800 detailed plans over 2 years of work reaching monthly workload peaks of 3,500 hrs.



Aeroville Shopping Mall

Steel Structure Design

Paris (France)

ABA20220988
APPROVED - Site Copy
Hastings District Council
20/09/2022

CRESCO

The highest level of complexity.

MORE ABOUT AP1000 NUCLEAR POWER PLANT

There is nothing more challenging than designing structures for a nuclear power plant station and only a selected number of engineering firms are accredited for operating within this specific field.

Cresco is proudly one these high-profile firms.

During the last decade Cresco has provided engineering design for structures of nuclear power plants in Asia and South America.

Cresco, for example, has worked on the Westinghouse AP1000 project, a “first of its kind” advanced third-generation nuclear power plant.

Cresco designed steel struture decks above the reactor within the Steel Containment and the reinforced concrete conical roof.

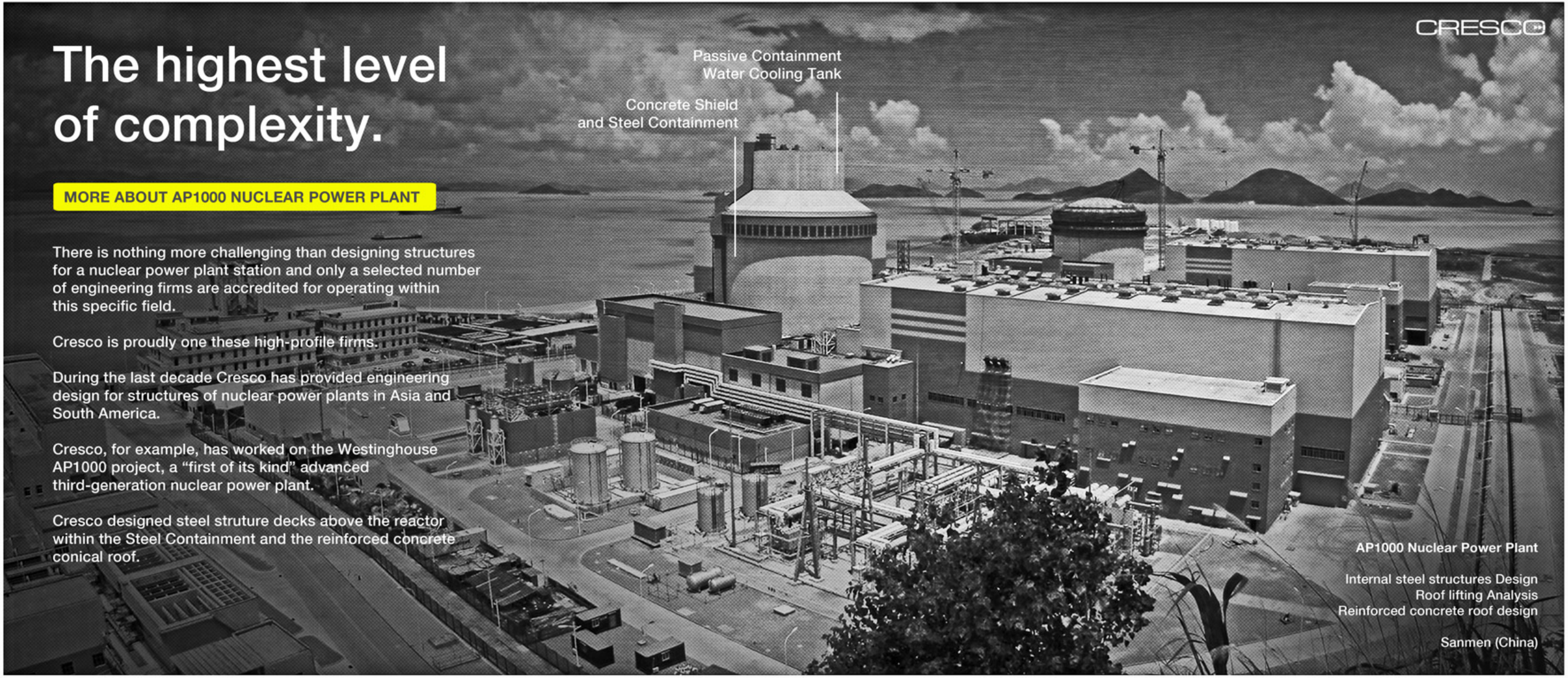

AP1000 Nuclear Power Plant

Internal steel structures Design
Roof lifting Analysis
Reinforced concrete roof design

Sanmen (China)

ABA20220988
APPROVED - Site Copy
Hastings District Council
20/09/2022

CRESCO

Structures for the world on the move.

DOWNLOAD CRESCO WORKS PORTFOLIO

Cresco has carried out designs for a variety of infrastructure projects: airports, roads, railways, intermodal logistic hubs, metros and bridges.

In 2014, Cresco participated in a design competition for a new bridge over the Serchio River in Italy. The construction of the bridge had a total budget of 35 million euros.

Cresco prevailed on a large number of prestigious European entrants achieving the gratifying result and prize for the third place.

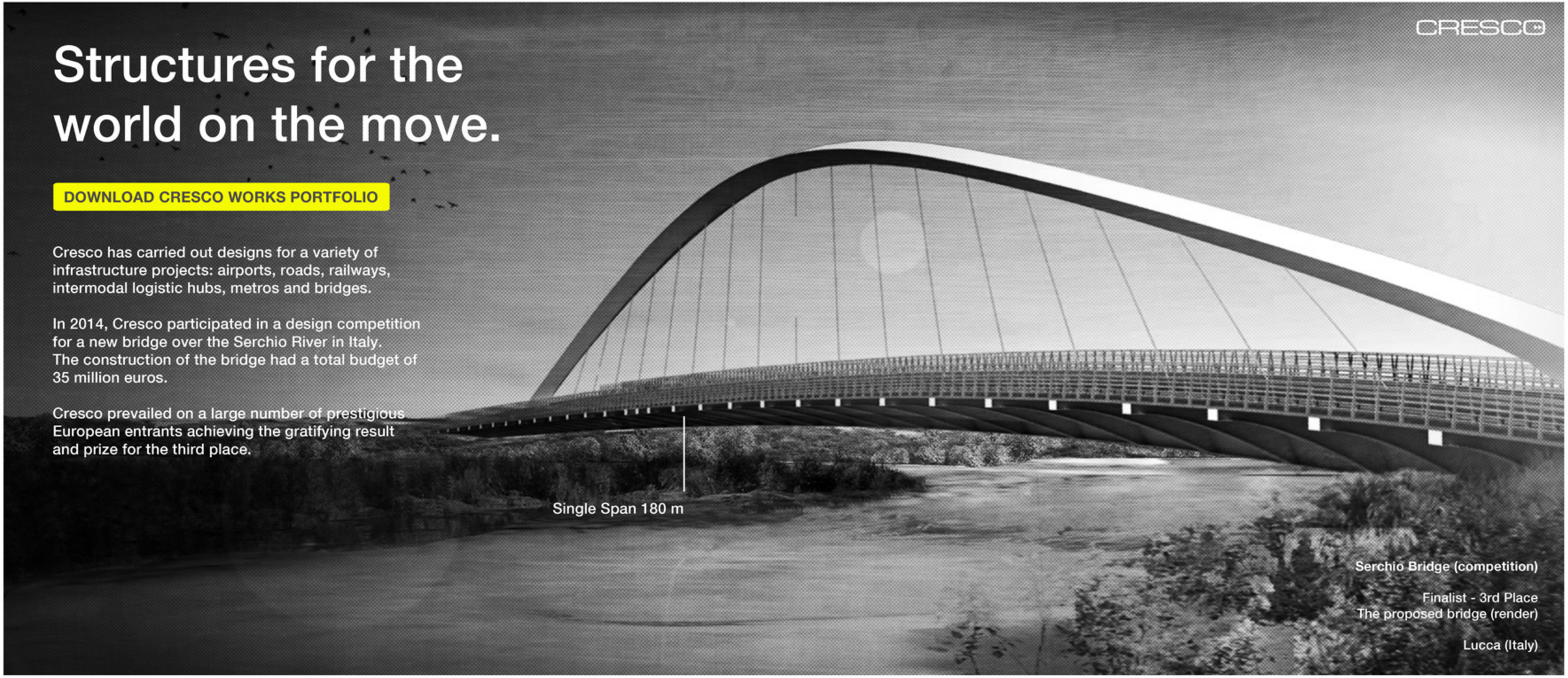

Serchio Bridge (competition)

Finalist - 3rd Place
The proposed bridge (render)

Lucca (Italy)

ABA20220988
APPROVED - Site Copy
Hastings District Council
20/09/2022



ABA20220988
APPROVED - Site Copy
Hastings District Council
20/09/2022

©CRESCO GROUP

COMPANY PROFILE

GIB EzyBrace® Bracing Software

ABA20220988
APPROVED - Site Copy
Hastings District Council
20/09/2022

Demand Calculation Sheet

Job Details

Name:	New Dwelling
Street and Number:	6 Te Ara Matipou
Lot and DP Number	Lot 33 Pt Lot 6 DP 285 Block XV Heretaunga SD
City/Town/District	Frimley, Hastings
Designer	Pam Oliver
Company	onedrafting Architectural Services
Date	20.06.2022

Building Specification

Number of Storeys	1
Floor Loading	2 kPa
Foundation Type	Slab
	Single
Cladding Weight	Light
Roof Weight	Light
Room in Roof Space	No
Roof Pitch (degrees)	22
Roof Height above Eaves (m)	2.726
Building Height to Apex (m)	5.38
Ground to Lower Floor (m)	0.225
Average Stud Height (m)	2.575
Building Length (m)	16.25
Building Width (m)	12.49
Building Plan Area (m²)	163.0

Building Location

Wind Zone = High

Earthquake Zone 3

Soil Type:	D & E (Deep to Very Soft)
Annual Prob. of Exceedance:	1 in 500 (Default)

Bracing Units required for Wind

	Along	Across
Single Level	**719**	**980**

Bracing Units required for Earthquake

	Along & Across
Single Level	**863**

ABA20220988
APPROVED - Site Copy
Hastings District Council
20/09/2022

Single Level Along Resistance Sheet

Job Name: New Dwelling

									Wind	EQ
									Demand	
									719	863
									Achieved	
Line	Element	Length (m)	Angle (degrees)	Stud Ht. (m)	Type	Supplier	Wind BUs	EQ BUs	939 131%	910 105%
a	1	0.60		2.575	HPgn	J Hardie	41	37		
	2	0.60		2.575	HPgn	J Hardie	41	37		
	3	1.20		2.575	HPn	J Hardie	75	79		
	4	1.60		2.575	HPn	J Hardie	100	106		
									256 OK	259 OK
b	1	1.90		2.575	GS2-NOM	GIB®	89	89		
	2	1.50		2.575	GS2-NOM	GIB®	70	70		
	3	0.60		2.575	HPgn	J Hardie	41	37		
	4	0.40		2.575	HPgn	J Hardie	27	25		
									226 OK	220 OK
c	1	0.60		2.575	GS2-N	GIB®	44	40		
	2	3.40		2.575	GS2-NOM	GIB®	158	158		
	3	0.42		2.575	GS1-N	GIB®	21	23		
									224 OK	221 OK
d	1	0.45		2.575	HPgn	J Hardie	31	28		
	2	0.70		2.575	HPgn	J Hardie	48	43		
	3	0.55		2.575	HPgn	J Hardie	37	34		
	4	0.55		2.575	HPgn	J Hardie	37	34		
	5	0.58		2.575	HPgn	J Hardie	39	36		
	6	0.58		2.575	HPgn	J Hardie	39	36		
				External Length =		13.89			232 OK	210 OK

ABA20220988
APPROVED - Site Copy
Hastings District Council
20/09/2022

Single Level Across Resistance Sheet

Job Name: New Dwelling

									Wind	EQ
									Demand	
									980	863
									Achieved	
Line	Element	Length (m)	Angle (degrees)	Stud Ht. (m)	Type	Supplier	Wind BUs	EQ BUs	1130 115%	1100 127%
m	1	1.20		2.575	HPn	J Hardie	75	79		
	2	1.20		2.575	HPn	J Hardie	75	79		
	3	1.20		2.575	HPn	J Hardie	75	79		
									225 OK	238 OK
n	1	3.20		2.575	GS1-N	GIB®	206	179		
									206 OK	179 OK
o	1	2.00		2.575	GS1-N	GIB®	129	112		
	2	1.20		2.575	GS2-NOM	GIB®	56	56		
	3	1.20		2.575	HPn	J Hardie	75	79		
									259 OK	247 OK
p	1	1.10		2.575	GS2-NOM	GIB®	51	51		
	2	1.10		2.575	GS2-NOM	GIB®	51	51		
	3	1.20		2.575	HPn	J Hardie	75	79		
									177 OK	182 OK
q	1	0.80		2.575	HPgn	J Hardie	54	49		
	2	1.00		2.575	HPgn	J Hardie	68	62		
	3	0.50		2.575	HPgn	J Hardie	34	31		
									156 OK	141 OK
r	1	1.70		2.575	HPn	J Hardie	106	112		
									106 OK	112 OK

ABA20220988
APPROVED - Site Copy
Hastings District Council
20/09/2022

Custom Wall Elements

Supplier	System	Min. Length m	Wind BUs/m	EQ BUs/m
Ecoply	EPBG	0.4	100	115
Ecoply	EP1-06	0.6	95	105
J Hardie	HPgn	1.2	69	58
J Hardie	JHD	0.4	83	107
J Hardie	JHD	0.6	99	107
J Hardie	JHD	1.2	154	140
J Hardie	JHDn	1.2	118	102
J Hardie	JHDgn	0.4	69	64
J Hardie	JHDgn	1.2	86	72
J Hardie	HPn	1.2	67	71
J Hardie	HP-4	0.4	85	91
J Hardie	HP-6	0.6	99	103
J Hardie	HPgn	0.4	73	66
J Hardie	HPg	0.4	90	98
J Hardie	HPg	0.6	127	136

ABA20220988
APPROVED - Site Copy
Hastings District Council
20/09/2022

GIB EzyBrace® Systems specification GS1-N

Specification code	Minimum length (m)	Lining requirement
GS1-N	0.4	Any 10mm or 13mm GIB® Standard plasterboard to one side only

WALL FRAMING

Wall framing to comply with;

- NZBC B1 — Structure B1/AS1 Clause 3 Timber (NZS 3604:2011).
- NZBC B2 — Durability B2/AS1 Clause 3.2 Timber (NZS 3602).

Framing dimensions and height as determined by NZS 3604:2011 stud and top plate tables for load bearing and non-bearing walls. The use of kiln dried stress graded timber is recommended.

BOTTOM PLATE FIXING

Timber floor

Pairs of hand driven 100 x 3.75mm nails at 600mm centres; or three power driven 90 x 3.15mm nails at 600mm centres.

Concrete floor

Internal Wall Bracing Lines: In accordance with the requirements of NZS 3604:2011 for internal wall plate fixing or 75 x 3.8mm shot fired fasteners with 16mm discs spaced at 150mm and 300mm from end studs and 600mm centres thereafter.

External Wall Bracing Lines: In accordance with the requirements of NZS 3604:2011 for external wall bottom plate fixing.

WALL LINING

- Any 10mm or 13mm GIB® plasterboard lining.
- Sheets can be fixed vertically or horizontally.
- Sheet joints shall be touch fitted.
- Use full length sheets where possible.

PERMITTED ALTERNATIVES

For permitted GIB® plasterboard alternatives refer to p. 5 in GIB EzyBrace® Systems literature.

FASTENING THE LINING

Fasteners

32mm x 6g GIB® Grabber® High Thread Screws, 32mm x 7g GIB® Grabber® Dual Thread Screws or 30mm GIB® Nails. If using the GIBFix® Angle use only 32mm x 7g GIB® Grabber® Dual Thread Screws.

Fastener centres

50,100,150, 225, 300mm maximum from each corner and 150mm thereafter around the perimeter of the bracing element. For vertically fixed sheets place fasteners at 300mm maximum centres to intermediate sheet joints. For horizontally fixed sheets place single fasteners to the sheet edge where it crosses the stud. Use daubs of GIBFix® adhesive at 300mm maximum centres to intermediate studs. Place fasteners no closer than 12mm from paper bound sheet edges and 18mm from any sheet end or cut edge.

JOINTING

Joint strength is important in delivering bracing system performance. All fastener heads stopped and all sheet joints GIB® Joint Tape reinforced and stopped in accordance with the GIB® Site Guide.

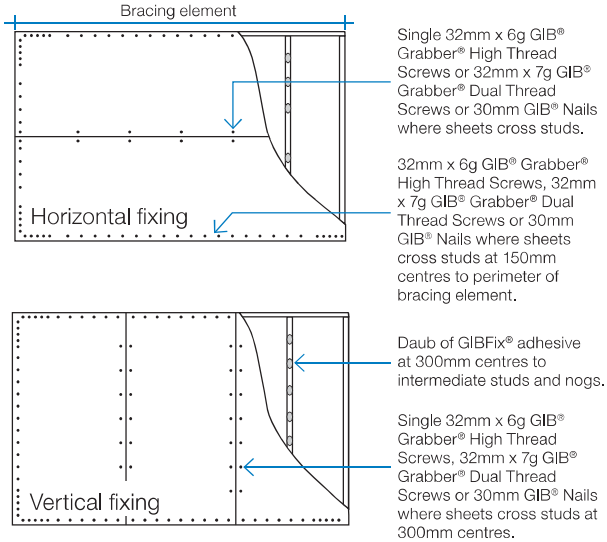

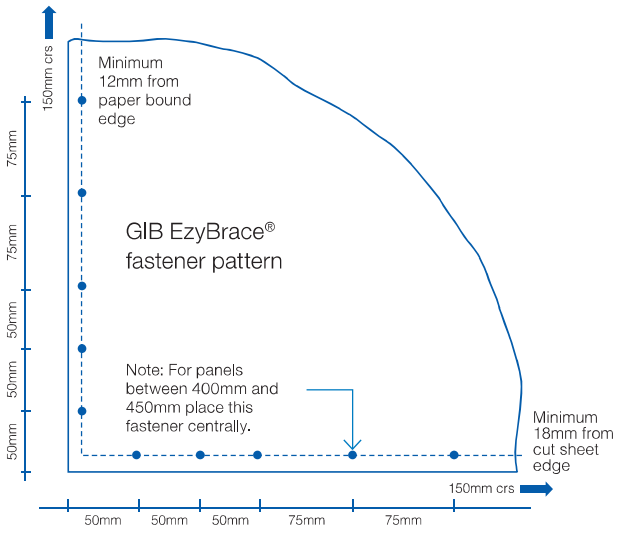

Unless stated all fastener spacings are maximums.

In order for GIB® systems to perform as tested, all components must be installed exactly as prescribed. Substituting components produces an entirely different system and may seriously compromise performance. Follow the specifications. This specification sheet is issued in conjunction with the publication GIB EzyBrace® Systems

ABA20220988
APPROVED - Site Copy
Hastings District Council
20/09/2022

GIB EzyBrace® Systems specification GS2-NOM

Specification code	Minimum length (m)	Lining requirement
GS2-NOM	0.4	Any 10mm or 13mm GIB® Standard plasterboard fixed to each side of the wall framing

WALL FRAMING

Wall framing to comply with;

- NZBC B1 — Structure B1/AS1 Clause 3 Timber (NZS 3604:2011).
- NZBC B2 — Durability B2/AS1 Clause 3.2 Timber (NZS 3602).

Framing dimensions and height as determined by NZS 3604:2011 stud and top plate tables for load bearing and non-bearing walls. The use of kiln dried stress graded timber is recommended.

BOTTOM PLATE FIXING

Timber floor

Pairs of hand driven 100mm x 3.75mm nails at 600mm centres; or three power driven 90mm x 3.15mm nails at 600mm centres.

Concrete floor

Internal Wall Bracing Lines: In accordance with the requirements of NZS 3604:2011 for internal wall plate fixing or 75mm x 3.8mm shot fired fasteners with 16mm discs spaced at 150mm and 300mm from end studs and then 600mm centres thereafter.

WALL LINING

- A layer of 10mm or 13mm GIB® plasterboard to each side of the wall.
- Sheets can be fixed vertically or horizontally.
- Sheet joints shall be touch fitted.
- Use full length sheets where possible.

PERMITTED ALTERNATIVES

For permitted GIB® plasterboard alternatives refer to p. 5 in GIB EzyBrace® Systems literature.

FASTENING THE LINING

Fasteners

32mm x 6g GIB® Grabber® High Thread Screws or 32mm x 7g GIB® Grabber® Dual Thread Screws. If using the GIBFix® Angle use 32mm x 7g GIB® Grabber® Dual Thread Screws.

Fastener centres

50, 300mm from each corner and 300mm maximum thereafter around the perimeter of the bracing element. For horizontally fixed sheets place single fasteners to the sheet edge where it crosses the stud. Use daubs of GIBFix® adhesive at 300mm maximum centres to intermediate studs. Place fasteners no closer than 12mm from paper bound sheet edges and 18mm from any sheet end or cut edge.

JOINTING

Joint strength is important in delivering bracing system performance. All fastener heads stopped and all sheet joints GIB® Joint Tape reinforced and stopped in accordance with the GIB® Site Guide.

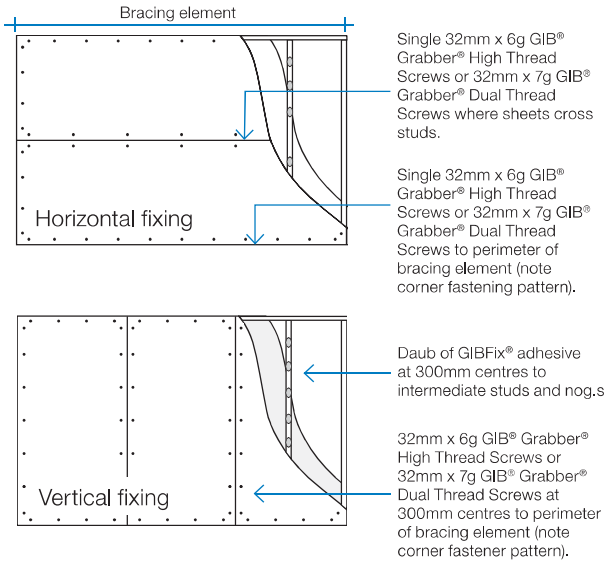

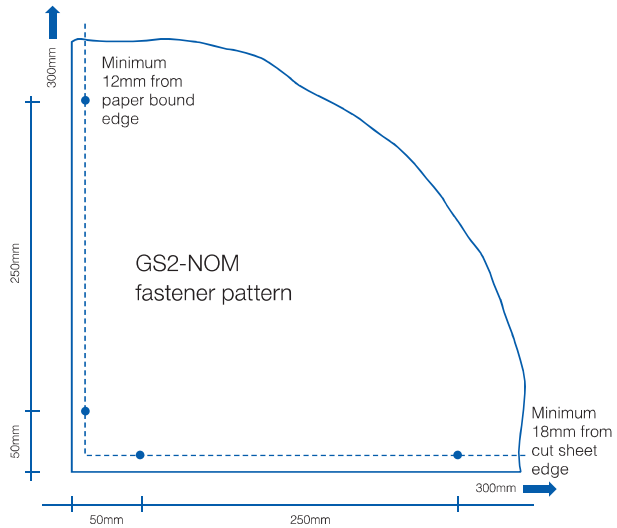

Unless stated all fastener spacings are maximums.

In order for GIB® systems to perform as tested, all components must be installed exactly as prescribed. Substituting components produces an entirely different system and may seriously compromise performance. Follow the specifications. This specification sheet is issued in conjunction with the publication GIB EzyBrace® Systems

ABA20220988
APPROVED - Site Copy
Hastings District Council
20/09/2022

GIB EzyBrace® Systems specification GS2-N

Specification code	Minimum length (m)	Lining requirement
GS2-N	0.4	Any 10mm or 13mm GIB® Standard plasterboard fixed to each side of the wall framing

WALL FRAMING

Wall framing to comply with;

- NZBC B1 — Structure B1/AS1 Clause 3 Timber (NZS 3604:2011).
- NZBC B2 — Durability B2/AS1 Clause 3.2 Timber (NZS 3602).

Framing dimensions and height as determined by NZS 3604:2011 stud and top plate tables for load bearing and non-bearing walls. The use of kiln dried stress graded timber is recommended.

BOTTOM PLATE FIXING

Timber Floor

Pairs of hand driven 100 x 3.75mm nails at 600mm centres; or three power driven 90 x 3.15mm nails at 600mm centres.

Concrete floor

Internal Wall Bracing Lines: In accordance with the requirements of NZS 3604:2011 for internal wall plate fixing or 75 x 3.8mm shot fired fasteners with 16mm discs spaced at 150mm and 300mm from end studs and then 600mm centres thereafter.

WALL LINING

- A layer of 10mm or 13mm GIB® plasterboard to each side of the wall.
- Sheets can be fixed vertically or horizontally.
- Sheet joints shall be touch fitted.
- Use full length sheets where possible.

PERMITTED ALTERNATIVES

For permitted GIB® plasterboard alternatives refer to p. 5 in GIB EzyBrace® Systems literature.

FASTENING THE LINING

Fasteners

32mm x 6g GIB® Grabber® High Thread Screws,32mm x 7g GIB® Grabber® Dual Thread Screws or 30mm GIB® Nails. If using the GIBFix® Angle use only 32mm x 7g GIB® Grabber® Dual Thread Screws.

Fastener centres

50,100,150, 225, 300mm maximum from each corner and 150mm thereafter around the perimeter of the bracing element. For vertically fixed sheets place fasteners at 300mm maximum centres to intermediate sheet joints. For horizontally fixed sheets place single fasteners to the sheet edge where it crosses the stud. Use daubs of GIBFix® adhesive at 300mm maximum centres to intermediate studs. Place fasteners no closer than 12mm from paper bound sheet edges and 18mm from any sheet end or cut edge.

JOINTING

Joint strength is important in delivering bracing system performance. All fastener heads stopped and all sheet joints GIB® Joint Tape reinforced and stopped in accordance with the GIB® Site Guide.

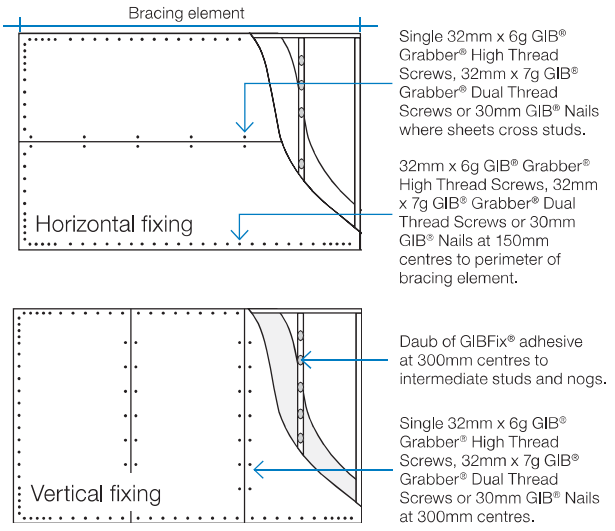

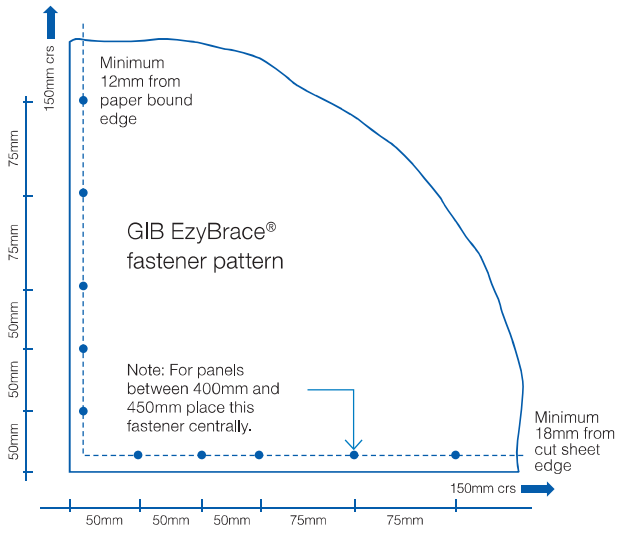

Unless stated all fastener spacings are maximums.

In order for GIB® systems to perform as tested, all components must be installed exactly as prescribed. Substituting components produces an entirely different system and may seriously compromise performance. Follow the specifications. This specification sheet is issued in conjunction with the publication GIB EzyBrace® Systems

ABA20220988
APPROVED - Site Copy
Hastings District Council
20/09/2022

15 Bracing figures - Pre-cladding

Figure 5: 400mm HomeRAB® Pre-Cladding or RAB® Board to concrete or timber floor - no hold down brackets

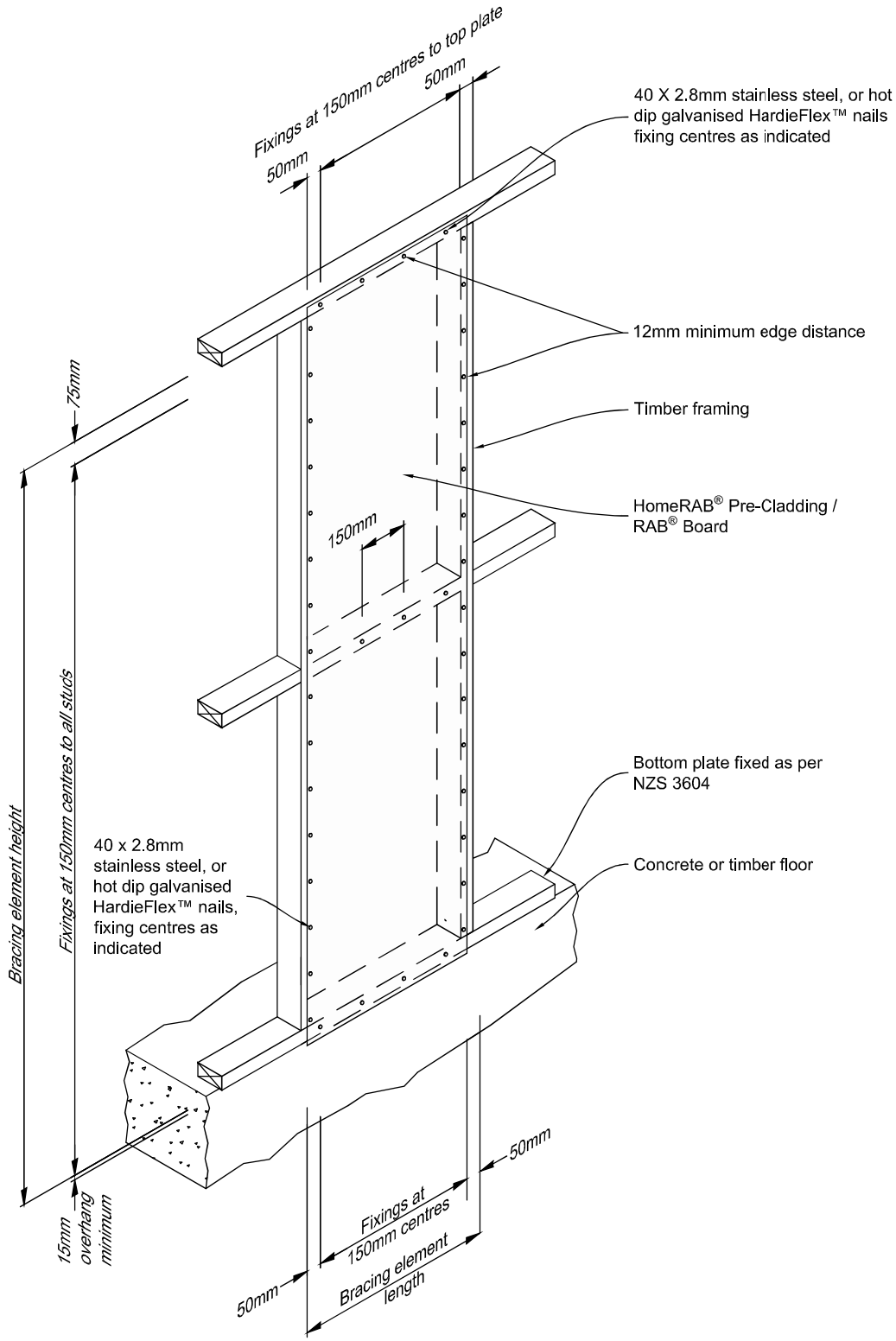

Product	System	Minimum length
HomeRAB® Pre-Cladding / GIB® Standard Plasterboard	HPgn	400mm
RAB® Board/GIB® Standard Plasterboard	JHDgn	400mm

ABA20220988
APPROVED - Site Copy
Hastings District Council
20/09/2022

Figure 6: 1200mm HomeRAB® Pre-Cladding or RAB® Board to concrete or timber floor - no hold down brackets

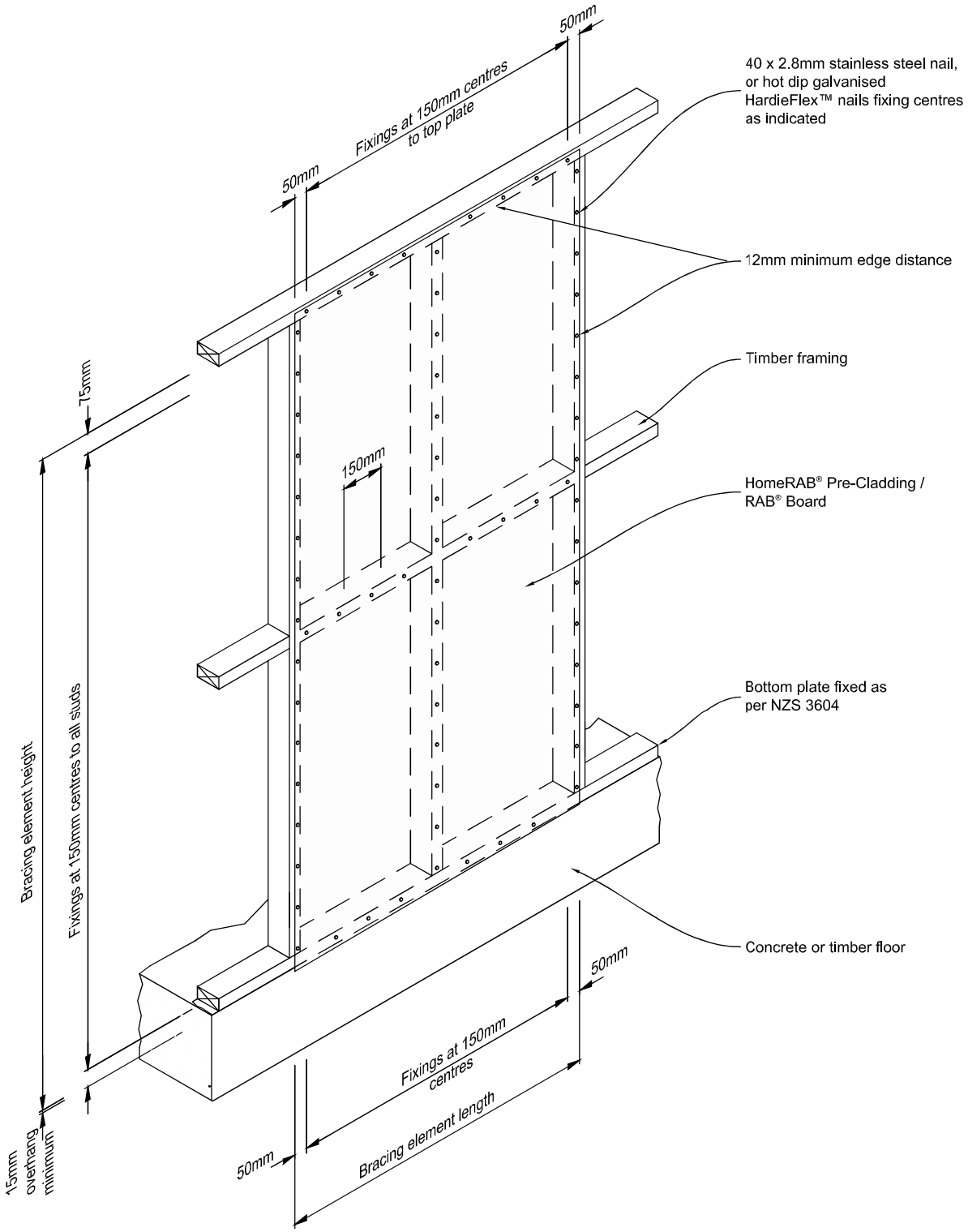

Product	System	Minimum length
HomeRAB® Pre-Cladding	HPn	1200mm
RAB® Board	JHDn	1200mm
HomeRAB® Pre-Cladding / Villaboard® Lining	HPvn	1200mm
HomeRAB® Pre-Cladding / GIB® Standard Plasterboard	HPgn	1200mm
RAB® Board / GIB® Standard Plasterboard	JHDgn	1200mm

ABA20220988
APPROVED - Site Copy
Hastings District Council
20/09/2022

Figure 7: 400/600mm HomeRAB® Pre-Cladding or RAB® Board to concrete or timber floor

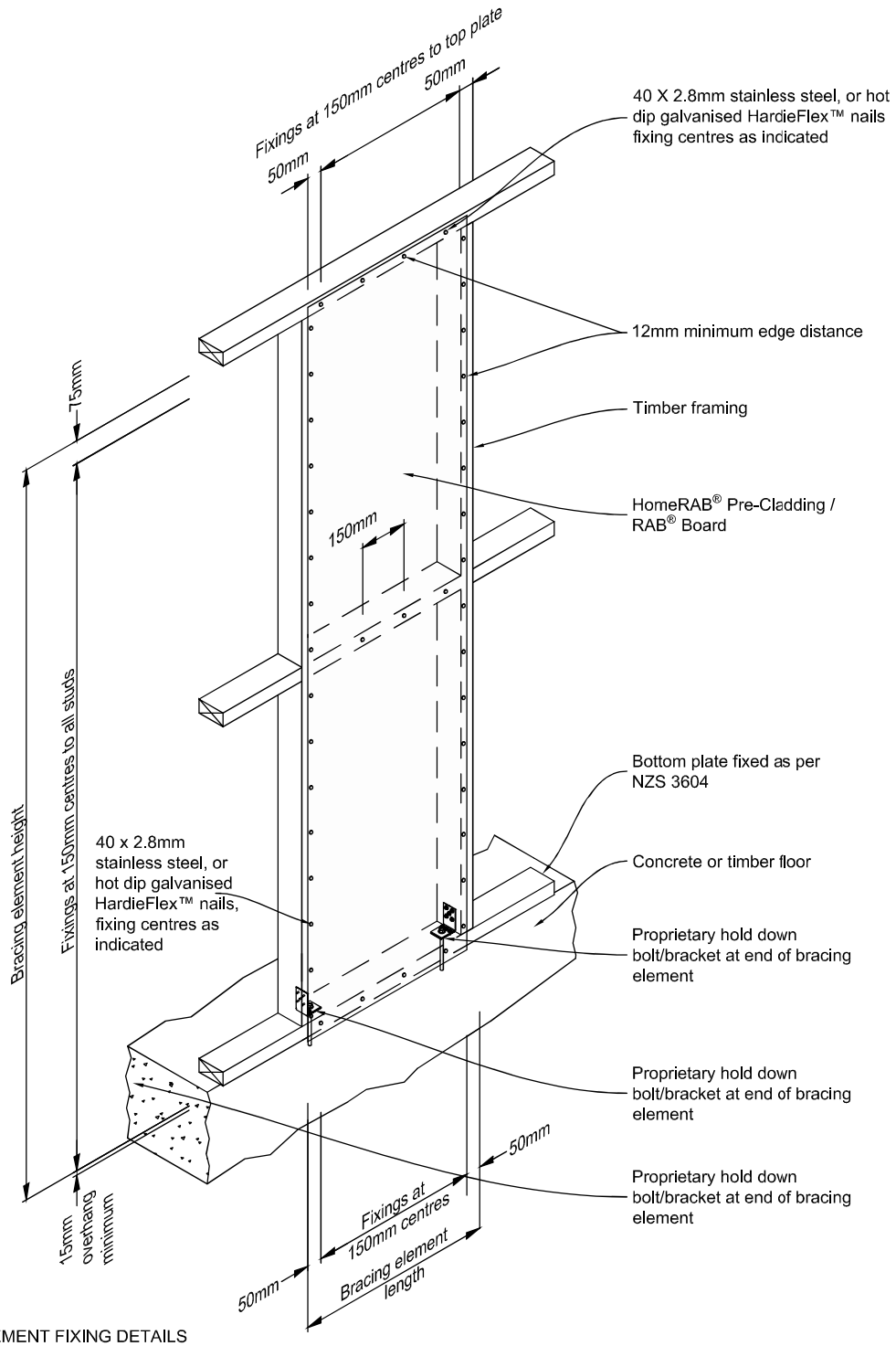

FIBRE CEMENT FIXING DETAILS

Notes for Figure 7:

- **Concrete floor** bottom plate fixing:- Ramset bracing anchor kit Concrete or GIB Handibrac® with 15kN anchor at each end of bracing element
- **Timber floor** bottom plate fixing:- Ramset bracing anchor kit Wood or GIB Handibrac® with a 12x150mm galvanised coach screw at each end of bracing element

Product	System	Minimum length
HomeRAB® Pre-Cladding	HP	400 or 600mm
HomeRAB® Pre-Cladding with 10mm GIB® Standard plasterboard	HPg	400 or 600mm
RAB® Board	JHD	400 or 600mm

ABA20220988
APPROVED - Site Copy
Hastings District Council
20/09/2022

Figure 8: 1200mm HomeRAB® Pre-Cladding or RAB® Board to concrete or timber floor

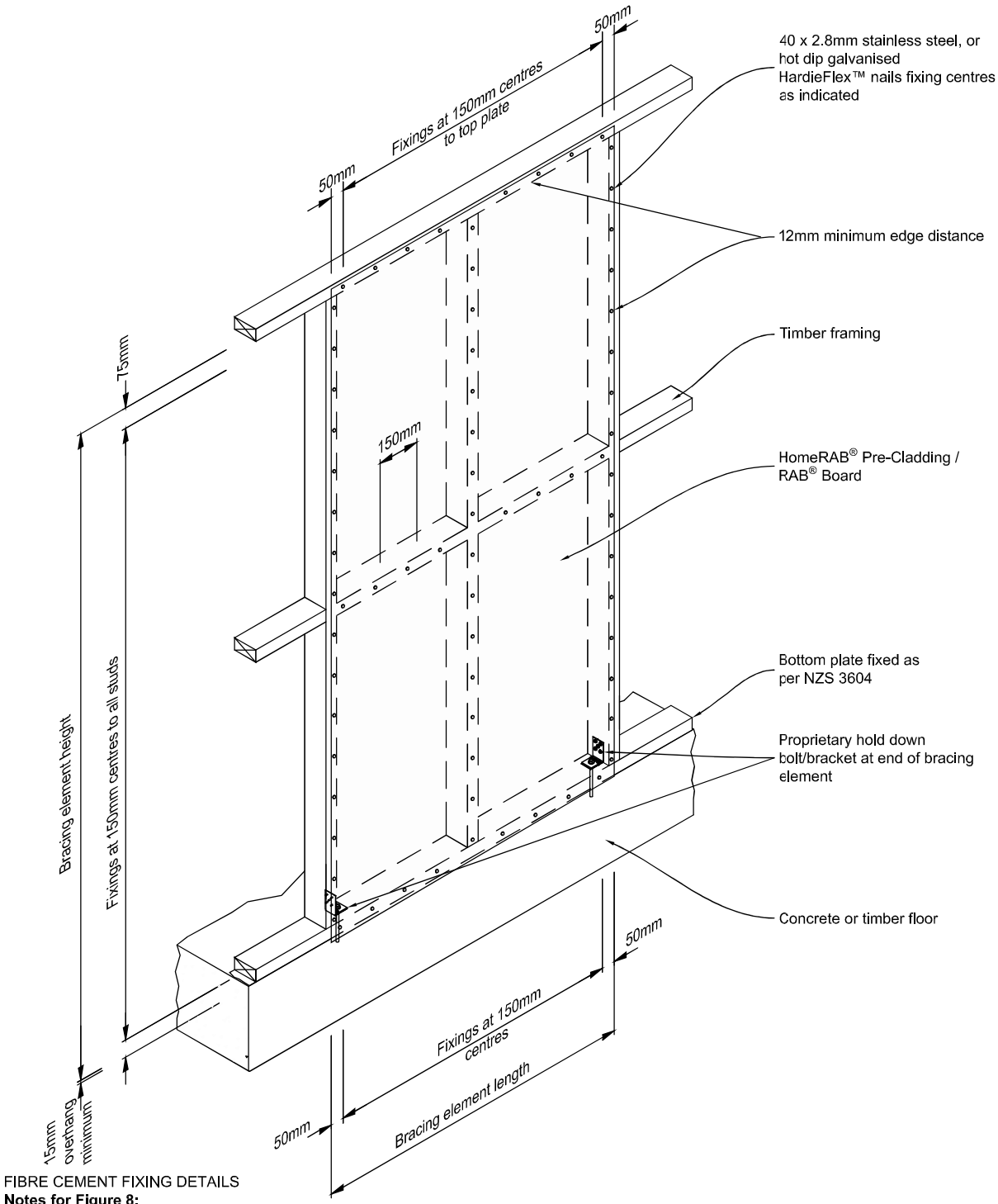

FIBRE CEMENT FIXING DETAILS

Notes for Figure 8:

- **Concrete floor** bottom plate fixing:- Ramset bracing anchor kit Concrete or GIB Handibrac® with 15kN anchor at each end of bracing element
- **Timber floor** bottom plate fixing:- Ramset bracing anchor kit Wood or GIB Handibrac® with a 12x150mm galvanised coach screw at each end of bracing element

Product	System	Minimum length
HomeRAB® Pre-Cladding	HP	1200mm
HomeRAB® Pre-Cladding with 10mm GIB® Standard plasterboard	HPg	1200mm
RAB® Board	JHD	1200mm

ABA20220988
APPROVED - Site Copy
Hastings District Council
20/09/2022

Figure 11: HomeRAB® Pre-Cladding/RAB® Board 400mm to concrete or timber floor - GIB® Standard Plasterboard - no hold down brackets

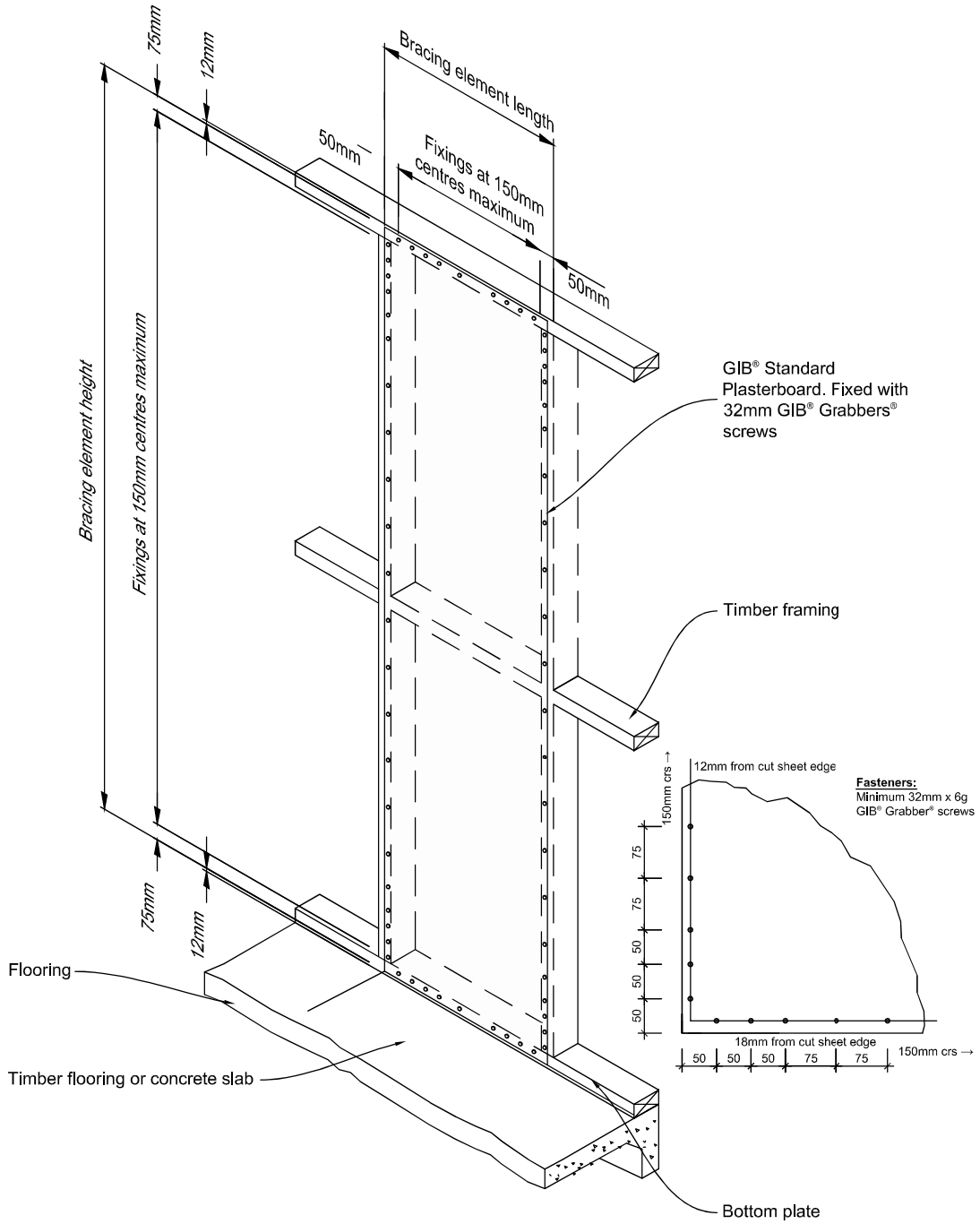

STANDARD GIB® FIXING DETAILS

Notes for Figure 11:

- All GIB® standard sheets to be fixed to Winstone Wallboards Ltd specifications. GIB® Bracing Systems.
- All GIB® bracing sheets to be stopped to Winstone Wallboards Ltd specifications. GIB® Site Guide.
- Refer Winstone Wallboards Ltd specifications for edge distance.

Product	System	Minimum length
HomeRAB® Pre-Cladding	HPgn	400mm
RAB® Board	JHDgn	400mm

ABA20220988
APPROVED - Site Copy
Hastings District Council
20/09/2022

DESIGN CERTIFICATE

Technical basis for structural design methodology contained in designIT for houses - New Zealand.

designIT for houses, New Zealand has been developed by experienced timber engineers to assist designers in selecting appropriate sizes of structural laminated veneer lumber products manufactured by Carter Holt Harvey LVL Limited (including hySPAN, hy90, hyONE and hyJOIST) and other generic stress grades of timber, to be used as structural elements for the construction of buildings that fall within the scope of NZS 3604.

The design methodology used for the software complies with the loading and general design requirements contained within AS/NZS 1170 and with timber structural design in accordance with NZS 3603:1993 including Amendment 4 (Verification method B1/VM1, 6.1).

designIT relies on the accurate input of span and loading information by the user. Where accurate inputs are submitted the product and/or stress grade and the size given will comply with the structural requirements of the New Zealand Building Code (NZBC), provided the installation is in accordance with the installation requirements provided by designIT and/or in product literature and/or NZS 3604, or specific engineering design, as appropriate.

Futurebuild LVL and SG8 components, when used and treated to the required treatment levels prescribed in NZS 3602 and NZS 3604, as modified by Acceptable Solution B2/AS1, will comply with the requirements of the NZBC (Acceptable Solution B2/AS1, 3.2).

References:
1. NZS 3603:1993 Timber Structures Standard.
2. NZS 3604:2011 Timber-framed buildings.
3. AS/NZS 1170:2002 Structural design actions, Parts 0 and 1.
4. AS/NZS 1170:2011 Structural design actions, Part 2: Wind actions.
5. AS/NZS 1170:2003 Structural design actions, Part 3: Snow and ice actions.
6. AS 1720.1:2010 Timber structures. Part 1: Design methods.
7. AS 1720.3:2016 Timber structures. Part 3: Design criteria for timber-framed residential buildings.

This Design Certificate, and any associated warranty/certification, is void where there has been substitution of alternate products not detailed within the Member Specification.

Version date: 11 April, 2022

For further information or advice contact:
Carter Holt Harvey LVL Limited,
173 Captain Springs Road, Onehunga. Auckland
Telephone: 0800 808 131
Email: designit@futurebuild.co.nz
Web: https://futurebuild.co.nz/

Specifier details:

Specifier:	Pam Oliver
Business name:	onedrafting Architectural Services
Address:	Napier 4112
Email:	pam@onedrafting.co.nz

Project & site details:

Project:	New Dwelling
Reference:	21-025
Site address:	Lot 33, 6 Te Ara Matipou Frimley Hastings 4120
For (owner/s):	Redshaw Homes
Design wind zone	High
Snow loading	Design snow zone: N1, Altitude: 10 m (sub-alpine), Ground snow load, $S_g^{1,2}$ = 0.0 kPa

1. designIT does not include any allowance for the effects of drifting and sliding of snow.
2. Snow loads are applied to roofed over structures only, the design of exposed floors/decks are not covered by designIT.

MEMBER DESIGN DETAILS

Member 1

1) Member code and description W14-L1 - Lintels - Supporting girder truss / truncated girder truss

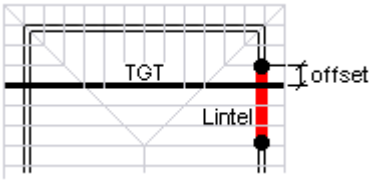

2) Date prepared 22 June 2022

3) Serviceability criteria AS 1720.1: 2010 and AS 1720.3: 2016

4) Design inputs

Roof type	Light roof and ceiling - 40 kg/m²
Roof pitch	22.0 °
Truss spacing	900 mm
Eaves overhang	450 mm
TGT span	4290 mm
TGT setback	2123 mm
TGT offset	1616 mm
Lintel span	2700 mm
Nominal wall thickness	90 mm

5) Member specification

Size, stress grade/product	Use 200 x 90 hy90
Material type	Structural Laminated Veneer Lumber to AS/NZS 4357

6) Serviceability

Load case	Limit[3] on average deflection[2]	Estimated average deflection[2]	Rigidity ratio[4]
Long term load - G + Ψ_{LQ}*	9.0 mm	3.3 mm (long term)	2.7
Live load - Ψ_sQ	10.8 mm	0.9 mm	11.4
Wind load - W_s	13.5 mm	2.8 mm	4.7

*Critical serviceability load case
See 'Notes for interpretation of serviceability data' at the end of this report

7) Reactions

Load case	k_1[1]	Limit States Design Reaction[2,3] End kN[4]
1.35G	0.60	-2.9
1.2G + 1.5Q	0.80	-4.4
1.2G + W_u + Ψ_cQ	1.00	-6.2
0.9G + W_u	1.00	3.9

8) Installation requirements

- Provide at least 30 mm bearing at end supports

Member 2

1) Member code and description G01-L1 - Lintels - In single or upper storey load bearing walls

2) Date prepared 22 June 2022

3) Serviceability criteria AS 1720.1: 2010 and AS 1720.3: 2016

4) Design inputs

Span	4.8 m
Roof load width 'RLW'	3.5 m
Roof type and mass	Light roof and ceiling - 40 kg/m²
Nominal wall thickness	90 mm

5) Member specification

Size, stress grade/product	Use 360 x 90 hyONE
Material type	Structural Laminated Veneer Lumber to AS/NZS 4357

6) Serviceability

Load case	Limit[3] on average deflection[2]	Estimated average deflection[2]	Rigidity ratio[4]
Long term load - $G + \Psi_L Q^*$	10.0 mm	3.8 mm (long term)	2.6
Live load - $\Psi_s Q$	15.0 mm	1.0 mm	14.3
Wind load - W_s	24.0 mm	3.2 mm	7.6

*Critical serviceability load case
See 'Notes for interpretation of serviceability data' at the end of this report

7) Reactions

Load case	k_1[1]	Limit States Design Reaction[2,3] End kN[4]
1.35G	0.60	-5.3
1.2G + 1.5Q	0.80	-7.9
$1.2G + W_u + \Psi_c Q$	1.00	-11.0
$0.9G + W_u$	1.00	6.5

8) Installation requirements

- Provide at least 30 mm bearing at end supports

Member 3

1) Member code and description W03-L1 - Lintels - Supporting girder truss / truncated girder truss

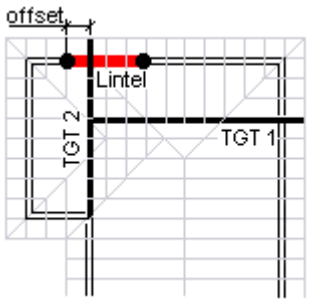

2) Date prepared 15 July 2022

3) Serviceability criteria AS 1720.1: 2010 and AS 1720.3: 2016

4) Design inputs

Roof type	Light roof and ceiling - 40 kg/m²
Roof pitch	22.0 °

Truss spacing	900 mm
Eaves overhang	450 mm
TGT 1 span	5570 mm
TGT 1 setback	2783 mm
TGT 2 span	6100 mm
TGT 2 setback	2782 mm
TGT 2 offset	632 mm
Lintel span	1800 mm
Nominal wall thickness	90 mm

5) Member specification

Size, stress grade/product	Use 200 x 90 hy90
Material type	Structural Laminated Veneer Lumber to AS/NZS 4357

6) Serviceability

Load case	Limit[3] on average deflection[2]	Estimated average deflection[2]	Rigidity ratio[4]
Long term load - G + $\Psi_L Q^*$	6.0 mm	1.9 mm (long term)	3.1
Live load - $\Psi_s Q$	7.2 mm	0.6 mm	12.2
Wind load - W_s	9.0 mm	1.8 mm	5.1

*Critical serviceability load case
See 'Notes for interpretation of serviceability data' at the end of this report

7) Reactions

Load case	k_1[1]	Limit States Design Reaction[2,3] End kN[4]
1.35G	0.60	-4.3
1.2G + 1.5Q	0.80	-6.7
1.2G + W_u + $\Psi_c Q$	1.00	-9.4
0.9G + W_u	1.00	6.1

8) Installation requirements

- Provide at least 30 mm bearing at end supports

Notes for interpretation of serviceability data

1. 'average deflection' is an engineering concept based upon a notional estimated load, notional member rigidity and, in some cases, an approximate model of material response to environmental conditions. These parameters are, 'standardised' in AS 1170 and AS 1720.

2. Deflection is the flexural response to load 'out-of-level' measurements of installations are not necessarily deflections and can incorporate 'initial out-of-straightness', whether intended or not. Furthermore, loads can be higher/lower than the notional estimate and in any comparison with measured levels, material variability needs to also be considered. AS 1720 gives the following basis for estimation of upper bound deflections for various materials.

No 1 Framing – visually graded to NZS 3631	Average + 100%
SG grades - mechanically graded to AS/NZS 1748	Average + 43%
GL grades for glulam to AS 1328	Average + 33%
LVL to AS/NZS 4357 (includes hySPAN and hyJOIST)	Average +18%

As can be seen, comparison of the 'average deflection' for different materials, even if calculated on the same basis, does not give the whole picture!

3. The limits referred are those specified in AS 1720.3 for the stated load case.

4. 'Rigidity ratio' expresses the rigidity of the specified beam relative to the rigidity of a notional beam just meeting the serviceability requirements detailed.

Notes for interpretation of reaction data

ABA20220988
APPROVED - Site Copy
Hastings District Council
20/09/2022

1. Duration of load factor 'k_1' for strength as per NZS 3603:1993
2. Negative (-) reactions relate to the 'gravity' or 'downwards' force on the support
3. Positive reactions relate to the 'upwards' forces or 'tie-down' requirement on the support
4. End reaction includes allowance for overhang/cantilever where one has been designed

ABA20220988
APPROVED - Site Copy
Hastings District Council
20/09/2022

BRANZ NZS 4218:2009 CALCULATION METHOD TOOL

PROJECT SUMMARY

Project name	Redshaw Homes
Address	Lot 33, 6 Te Ara Matipou, Frimley, Hastings
Designer	Pam Oliver - onedrafting Achitectural Services
Address	P O Box ~
Phone	0275 431005
Date	15.07.2022
Reference number	21-025

Climate zone	2: Rest of North Island not in zones 1 or 3	
Wall construction type	1: Any wall type	
If mixed wall types	0	Percentage of wall area solid timber construction
	0	Percentage of wall area high thermal mass construction
	100	Percentage of wall area "Any wall type"
If solid timber wall	1: External 75 mm thick solid timber and timber framed internal walls	

Summary of calculation method heat loss

Element	Area (m²)	Proposed building heat loss (W/°C)	Reference building heat loss (W/°C)	
Roofs/ceilings	118.4	38.2	40.8	
Walls	151.7	70.6	88.8	
Floors	163.0	101.9	125.4	
Vertical glazing	31.1	119.7	230.5	
Skylights	0.0	0.0	-	
Doors	17.0	94.3	-	
Total		424.7	485.5	W/°C

Glazing percentage: 16%
Glazing <40%: Yes
Minimum R-values OK: Yes
Issues to check:

PASS/FAIL **PASS**

ABA20220988
APPROVED - Site Copy
Hastings District Council
20/09/2022

BRANZ NZS 4218:2009 CALCULATION METHOD TOOL

BUILDING ELEMENTS

Roofs/ceilings: Skylights are not included here. Enter them in the skylights table below.

Roof/ceiling element	Description	Area (m²)	Construction R-value	Heat loss
1	90mm ceiling joist pitched steel, R3.2	118.44	3.1	38.2
2				
3	IC- Rated			
4				
5				
	Total area	118.44 m²		
	Total roofs/ceilings heat loss			38.2 W/°C

Skylights: Skylights are at an angle of 60° or less to the horizontal. If the skylight R-value is not known, use a value of 0.

Skylight	Description	Area (m²)	Construction R-value	Heat loss
1				
2				
3				
4				
5				
	From Skylight Schedule	0		0.0
	Total area	0 m²		
	Total skylight heat loss			0.0 W/°C

Walls: Doors are not included here. Enter them in the door table.

Wall element	Description	Area (m²)	Construction R-value	Heat loss
1	90mm T frame 50mm EIFS cavity R2.2	73.36	2.5	29.3
2	90mm T frame, sheet direct. R2.2	35.25	1.9	18.6
3	90mm T Frame Linea WB, cavity R2.2	43.06	1.9	22.7
4				
5				
6				
	Total area	151.67 m²		
	Total wall heat loss			70.6 W/°C

Floors: Only include the ground or exterior floors. Intermediate floors not exposed to the exterior are excluded.

Floor element	Description	Area (m²)	Construction R-value	Heat loss
1	Firth XPod concrete slab	163	1.6	101.9
2	Perimeter 58300 (2.79)			
3				
4				
5				
	Total area	163 m²		
	Floor heat loss			101.9 W/°C

Vertical glazing: Vertical glazing only (steeper than 60°), including glazing in doors. Skylights are on the Skylight table.

If the glazing R-value is not known, use a value of 0.15

Glazing element	Description	Area (m²)	Construction R-value	Heat loss
1	Double glazed Aluminium		0.26	
2				
3				
4				
5				
6				
7				
8				
9				
10				
	From Glazing Schedule	31.134		119.7
	Total area	31.134 m²		
	Total vertical glazing heat loss			119.7 W/°C

Doors: Only the non-glazed area of doors is included. The glazed area of doors must be entered in the Glazing table.

The heat loss of doors is automatically set to 0 if the total door area is ≤ 6m² or 6% of the total wall area.

If the R-value of a door is not entered a default value of R 0.18 is automatically used.

Door element	Description	Area (m²)	Construction R-value	Heat loss
1				0.0
2				0.0
3				0.0
4				0.0
5				
	From Door Schedule	16.9776		94.3
	Total area	16.9776		
	Total door heat loss			94.3 W/°C

ABA20220988
APPROVED - Site Copy
Hastings District Council
20/09/2022

BRANZ NZS 4218:2009 CALCULATION METHOD TOOL

Vertical Glazing Schedule

Vertical glazing: Vertical glazing only (steeper than 60°), including glazing in doors. Skylights are on the Skylight table.
If the glazing R-value is not known, use a value of 0.15

ID	Description	Quantity	Width (mm)	Height (mm)	Construction R-value	Area (m²)	Heat loss
1	W01	1	400	2,060	0.26	0.824	3.2
2	W02	1	1,800	1,300	0.26	2.34	9.0
3	W05, W06	2	600	1,300	0.26	1.56	6.0
4	W07	1	1,600	1,300	0.26	2.08	8.0
5	W08	1	1,200	600	0.26	0.72	2.8
6	W09	1	600	600	0.26	0.36	1.4
7	W10	1	1,000	600	0.26	0.6	2.3
8	W11, W12	2	600	100	0.26	0.12	0.5
9	W13, W18	2	2,000	2,100	0.26	8.4	32.3
10	W14	1	2,700	2,100	0.26	5.67	21.8
11	W15, W16	2	900	2,100	0.26	3.78	14.5
12	W17, W19	2	1,800	1,300	0.26	4.68	18.0
13							
14							
15							
16							
17							
18							
19							
20							
21							
22							
23							
24							
25							
26							
27							
28							
29							
30							

Total area 31.1 m²
Total vertical glazing heat loss 119.7

Door Schedule

Doors: Only the non-glazed area of doors is included. The glazed area of doors must be entered in the Glazing table.
The heat loss of doors is automatically set to 0 if the total door area is ≤ 6m² or 6% of the total wall area.
If the R-value of a door is not entered a default value of R 0.18 is automatically used.

ID	Description	Quantity	Width (mm)	Height (mm)	Construction R-value	Area (m²)	Heat loss
1	W01	1	810	2,060		1.6686	9.3
2	D1	9	810	2,100	0.18	15.309	85.1
3							
4							
5							
6							
7							
8							
9							
10							
11							
12							
13							
14							
15							
16							
17							
18							
19							
20							
21							
22							
23							
24							
25							
26							

ABA20220988
APPROVED - Site Copy
Hastings District Council
20/09/2022

27							
28							
29							
30							

Total area 17.0 m²
Total door heat loss 94.3

Skylight Schedule

Skylights: Skylights are at an angle <= 60° to the horizontal. If the skylight R-value is not known, use of 0.15.

ID	Description	Quantity	Width (mm)	Height (mm)	Construction R-value	Area (m²)	Heat loss
1							
2							
3							
4							
5							
6							
7							
8							
9							
10							
11							
12							
13							
14							
15							
16							
17							
18							
19							
20							
21							
22							
23							
24							
25							
26							
27							
28							
29							
30							

Total area 0.0 m²
Total skylight heat loss 0.0

Tumu Frame & Truss
Stortford Lodge, PO Box 2308, Hastings, Ph (06) 879-7850, Fax (06) 879-6468

ABA20220988
APPROVED - Site Copy
Hastings District Council
20/09/2022

Date: 30-05-2022
Ver 4.5.5

Fabricator / Designer Statement

Job Ref: **7011Q**

This statement may be used by the Building Consent Authority for compliance purposes and is issued by a licensed truss fabricator using the Pryda Build software.

CLIENT Name: *Redshaw Homes*

SITE Details:

Address : *33 Ikanui Road, Stage 1*
Frimley

City:
Hastings
Post Code:

Nominal Design Criteria:

Design working life: 50 years
Building importance: Residential (Importance Level 2)
Roofing: Pressed metal tiles (7.5 kg/sq.m)
Ceiling: 13mm Gib-board (8.5 kg/sq.m)
Top chord purlins: 900 mm

Design roof snow load: 0 Pa
(incl. probability factor)
Ground snow load: 0 Pa
Location: Region N1 - lower Nth Island
Altitude above sea level: 100 m

BC restraints: Battens at 600 mm crs
Standard truss spacing: 900 mm
Standard roof pitch: 22.00 deg.
Ult. design wind speed: 44 m/s (wind classification = High)

Max. eaves height: 3 m
Max. ridge height: 8 m

Int pressure coeff. up: 0.2
Overhang Condition: Metal fascia

The correctness of the Design Criteria used by the Pryda Build truss design software is the responsibility of the fabricator.
Note : Where relevant, a structural fascia beam is required at all hip and dutch hip corners to support the short creeper/rafter overhangs, as shown in AS4440-2004

Note: This statement must be read in conjuction with the truss layout and detail sheets.

Note: Some trusses in this job support ceiling materials that are different to this nominal data (see individual truss detail sheets).

Note: The Structural Timber products supplied in this building stores approximately '1990' kg of carbon.

All truss designs and their connections have been designed using Pryda design software. Additional items such as roof/ceiling plane bracing, special notes, supplementary timber, etc., which may be shown on the plan drawings are the responsibility of others.

All trusses have been manufactured in accordance with the fabrication specifications provided by Pryda, and shall be installed, connected and braced in accordance with the recommendations given in - : AS4440:2004 "Installation of nailplated timber roof trusses" and any other supplementary details that may be provided, such as the Pryda Installation Guides.

Timber verification and grading values are in accordance with clause B1 and timber treatment in accordance with clause B2 of the New Zealand Building Code.

I/we confirm that the trusses for this project have been manufactured in accordance with the fabrication specifications provided by Pryda New Zealand.

Name: Jako Du Toit Position: Detailer

Signed: Date: 30-05-2022

ABA20220988
APPROVED - Site Copy
Hastings District Council
20/09/2022

Fabricator / Designer Statement

Job Ref: **7011Q**

Note 1: All timber framing nails are machine-driven, glue coated, or annular/helical deformed shank. Use specified fixings with Pryda connectors as noted.

Note 2: The following trusses have not yet fully passed all of the design criteria, eg:-

Truss Mark	Status
R2	Fixings and connections have not been designed.
BR1	Fixings and connections have not been designed.
R1	Fixings and connections have not been designed.

Tie-downs to walls/beams:

Trusses need to be fixed at each timber support with 2/90x3.15 dia Skew Nails.

All additional tie-downs are as follows:

Truss	Sup	Distance	Fixing	Support Jt Grp	Support Width	Truss Jt Grp	Uplift (kN)	Fixing Details
C1	1	-	1/NPPC4	JD4	90	JD5	-0.83	2/12g-11x35 screws, 6/30x3.15d nails
C2	1	-	1/NPPC4	JD4	90	JD5	-0.81	2/12g-11x35 screws, 6/30x3.15d nails
C4	1	-	1/NPPC4	JD4	90	JD5	-0.93	2/12g-11x35 screws, 6/30x3.15d nails
C5	1	0	1/NPPC4	JD4	90	JD5	-0.70	2/12g-11x35 screws, 6/30x3.15d nails
C6	1	0	1/NPPC4	JD4	90	JD5	-0.94	2/12g-11x35 screws, 6/30x3.15d nails
C7	1	-	1/NPPC4	JD4	90	JD5	-0.92	2/12g-11x35 screws, 6/30x3.15d nails
H3	1	-	1/NPPC4	JD4	90	JD5	-0.80	2/12g-11x35 screws, 6/30x3.15d nails
H4	1	-	1/NPPC4	JD4	90	JD5	-1.40	2/12g-11x35 screws, 6/30x3.15d nails
J1	1	-	1/NPPC4	JD4	90	JD5	-0.96	2/12g-11x35 screws, 6/30x3.15d nails
J2	1	-	1/NPPC4	JD4	90	JD5	-1.08	2/12g-11x35 screws, 6/30x3.15d nails
J3	1	-	1/NPPC4	JD4	90	JD5	-0.97	2/12g-11x35 screws, 6/30x3.15d nails
J4	1	-	1/NPPC4	JD4	90	JD5	-0.88	2/12g-11x35 screws, 6/30x3.15d nails
J5	1	-	1/NPPC4	JD4	90	JD5	-0.80	2/12g-11x35 screws, 6/30x3.15d nails
J6	1	-	1/NPPC4	JD4	90	JD5	-0.98	2/12g-11x35 screws, 6/30x3.15d nails
M1	1	-	1/NPPC4	JD4	90	JD5	-1.33	2/12g-11x35 screws, 6/30x3.15d nails
MG1	1	-	1/NPPC4	JD4	90	JD5	-3.25	2/12g-11x35 screws, 6/30x3.15d nails
MG2	1	-	2/NPPC4	JD4	90	JD4	-5.14	2/12g-11x35 screws, 6/30x3.15d nails
	6	6178	2/NPPC6	JD4	77	JD4	-8.96	3/12g-11x35 screws, 9/30x3.15d nails
MTG1	1	-	1/NPPC4	JD4	90	JD5	-1.45	2/12g-11x35 screws, 6/30x3.15d nails
	5	4345	2/NPPC6	JD4	90	JD5	-6.89	3/12g-11x35 screws, 9/30x3.15d nails
S1	1	-	1/NPPC4	JD4	90	JD5	-1.18	2/12g-11x35 screws, 6/30x3.15d nails
	4	3045	1/NPPC4	JD4	90	JD5	-0.81	2/12g-11x35 screws, 6/30x3.15d nails
	6	4690	1/NPPC4	JD4	45	JD5	-0.94	2/12g-11x35 screws, 6/30x3.15d nails
S2	6	4473	1/NPPC4	JD4	90	JD5	-1.54	2/12g-11x35 screws, 6/30x3.15d nails
S3	1	-	1/NPPC4	JD4	90	JD5	-2.85	2/12g-11x35 screws, 6/30x3.15d nails
S4	1	-	1/NPPC4	JD4	90	JD5	-0.98	2/12g-11x35 screws, 6/30x3.15d nails
	5	4345	1/NPPC4	JD4	90	JD5	-2.34	2/12g-11x35 screws, 6/30x3.15d nails
S5	1	-	1/NPPC4	JD4	90	JD5	-2.21	2/12g-11x35 screws, 6/30x3.15d nails
	6	6780	1/NPPC4	JD4	90	JD5	-2.24	2/12g-11x35 screws, 6/30x3.15d nails
S6	1	-	1/NPPC4	JD4	90	JD5	-2.44	2/12g-11x35 screws, 6/30x3.15d nails
	14	4690	1/NPPC4	JD4	88	JD5	-1.87	2/12g-11x35 screws, 6/30x3.15d nails
	9	3045	1/NPPC4	JD4	90	JD5	-1.95	2/12g-11x35 screws, 6/30x3.15d nails
S7	1	-	1/NPPC4	JD4	90	JD5	-2.02	2/12g-11x35 screws, 6/30x3.15d nails
	6	6780	1/NPPC4	JD4	90	JD5	-2.03	2/12g-11x35 screws, 6/30x3.15d nails
S8	1	-	1/NPPC4	JD4	90	JD5	-1.75	2/12g-11x35 screws, 6/30x3.15d nails
S9	1	-	1/NPPC4	JD4	90	JD5	-2.23	2/12g-11x35 screws, 6/30x3.15d nails
	5	4290	1/NPPC4	JD4	90	JD5	-2.23	2/12g-11x35 screws, 6/30x3.15d nails
SG2	1	-	2/NPPC4	JD4	90	JD4	-6.57	2/12g-11x35 screws, 6/30x3.15d nails
	4	3045	2/NPPC4	JD4	90	JD4	-4.45	2/12g-11x35 screws, 6/30x3.15d nails
TG2	1	-	1/NPPC4	JD4	90	JD5	-1.12	2/12g-11x35 screws, 6/30x3.15d nails
	5	4045	2/NPPC4	JD4	90	JD5	-6.25	2/12g-11x35 screws, 6/30x3.15d nails
TGG1	1	-	2/NPPC4	JD4	90	JD5	-4.36	2/12g-11x35 screws, 6/30x3.15d nails
	6	7190	1/NPPC4	JD4	90	JD5	-3.34	2/12g-11x35 screws, 6/30x3.15d nails
TS1	1	-	1/NPPC4	JD4	90	JD5	-1.18	2/12g-11x35 screws, 6/30x3.15d nails
	5	4345	1/NPPC4	JD4	90	JD5	-2.72	2/12g-11x35 screws, 6/30x3.15d nails
TS2	1	-	1/NPPC4	JD4	90	JD5	-1.11	2/12g-11x35 screws, 6/30x3.15d nails
	5	4345	1/NPPC4	JD4	90	JD5	-2.81	2/12g-11x35 screws, 6/30x3.15d nails
TS3	1	-	1/NPPC4	JD4	90	JD5	-0.94	2/12g-11x35 screws, 6/30x3.15d nails
	4	4045	1/NPPC4	JD4	90	JD5	-3.72	2/12g-11x35 screws, 6/30x3.15d nails

Primary connections (truss to girder):

Truss Marks			Fixing Details	
Girder	Supported	Connector	Girder	Supported
MG1	S2	FB4590	8/30x3.15d nails	4/30x3.15d nails
	S8	FB4590	8/30x3.15d nails	4/30x3.15d nails
MG2	M1	FB4590	8/30x3.15d nails	4/30x3.15d nails

ABA20220988
APPROVED - Site Copy
Hastings District Council
20/09/2022

Fabricator / Designer Statement

Job Ref: **7011Q**

	MTG1	FB4590	8/30x3.15d nails	4/30x3.15d nails
	S4	FB4590	8/30x3.15d nails	4/30x3.15d nails
	TS1	FB4590	8/30x3.15d nails	4/30x3.15d nails
	TS2	FB4590	8/30x3.15d nails	4/30x3.15d nails
SG2	S3	2/MG	8/30x3.15d nails	8/30x3.15d nails
	TG2	FB4590	8/30x3.15d nails	4/30x3.15d nails
	TS3	FB4590	8/30x3.15d nails	4/30x3.15d nails
TGG1	MG1	2/MG	8/30x3.15d nails	8/30x3.15d nails

Secondary fixings (hip & gable ends, valleys):

All trusses are to be fixed at each support with the following:

Hip truss to truncated girder	3 face nails, bottom chords
Jack truss to truncated girder	3 skew nails or back face nails, bottom chords
Creeper truss to hip truss	3 face nails, top and bottom chords
Top chord extensions	2 skew nails
Valley trusses	1 skew nail
Outriggers	2 skew nails

All additional connections are as follows:

Supporting Truss	*Supported Truss*	*Top Chord*	*Bottom Chord*
(Various)	J5	1/MGL	-
	MV2	-	1/MGL
	MV3	-	1/MGL
	MV4	-	1/MGL
	MV5	-	1/MGL
H4	C6	1/NPA75/190	-
	C7	1/NPA75/190	-
MTG1	J2	1/MGL	-
	J3	1/MGL	-
	J4	1/MGL	-
	J5	1/MGL	-
S6	OR1	1/MGL	-
	OR3	1/MGL	-
S9	J1	1/MGL	-
TG2	H4	1/MGL	-
	J6	1/MGL	-

Fixing Summary:

Connector	*Description*	*Total*	*Fixing Method (per connector)*	
Primary			*Girder*	*Supported Truss*
FB4590	Joist hanger	13	8/30x3.15d nails	4/30x3.15d nails
MG	Multigrips	6	8/30x3.15d nails	8/30x3.15d nails
Secondary			*Supporting Truss*	*Supported Truss*
MGL	Multigrip (long)	18	6/30x3.15d nails	4/30x3.15d nails
NPA75/190	Nail-on plate (angled)	8	6/30x3.15d nails	6/30x3.15d nails
Tiedown			*Support*	*Truss*
NPPC4	Purlin cleat	86	2/12g-11x35 screws	6/30x3.15d nails
NPPC6	Purlin cleat	4	3/12g-11x35 screws	9/30x3.15d nails

Tumu Frame _Truss
Stortford Lodge, PO Box 2308, Hastings, , Ph (06) 879-7850, Fax (06) 879-6468

ABA20220988
APPROVED - Site Copy
Hastings District Council
20/09/2022

TRUSS DETAILS (DESIGN)

Job Ref: 7011Q

Truss Reference: 01 (Single Truss)

Truss type: Standard | No. plies : 1x45mm | Design spacing : 752mm | No. of : 2 | Building type: Residential

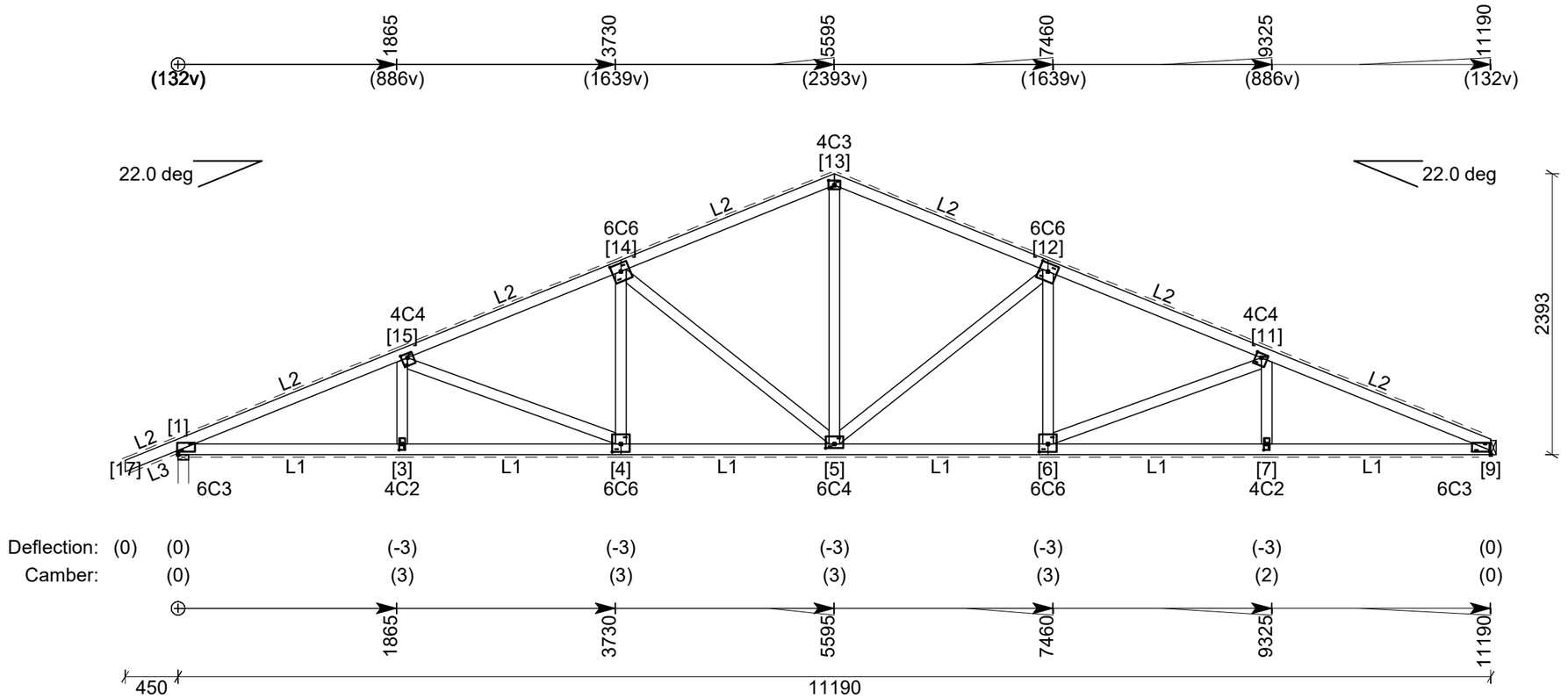

Linings

L1: 13mm Gib-board (8.5 kg/sq.m).
Battens @ 600mm.
L2: Pressed metal tiles (7.5 kg/sq.m).
Battens @ 900mm (Restraints @ 1800mm).
L3: Fibrecement (4.5mm) (7.7 kg/sq.m).
Battens @ 600mm.

Timber

Top Chords	1 / 90x45 MSG8 H12 uno
Bottom Chords	1 / 90x45 MSG10 H12 uno
Webs	1 / 90x45 MSG8 H12 uno

Notes

1. Deflection = permanent load deflection including creep (negative = downward movement).
2. Overhang condition: Metal fascia.
3. Refer to Pryda Installation Guide for full bracing details.
4. Refer to layout for overall truss bracing.
5. Truss close to gable end: NO

Major supports and factored reactions

Joint	Type	Width	Perm.	Max. down (LC)	Uplift	Tie-down	Connector
1	Wall Ext	90	1.9 kN	4.2 kN (Gc+Wd3)	-2.8 kN	1/NPPC4	-
9	Truss Chord	45	1.8 kN	3.8 kN (Gc+Wd3)	-2.8 kN	-	MG

Note: Refer to Truss Connections Report / Producer Statement for fixing details.

ABA20220988
APPROVED - Site Copy
Hastings District Council
20/09/2022

TRUSS DETAILS (DESIGN)

Job Ref: 7011Q

Truss Reference : T33 (Single Truss)

Truss type: Truncated Standard | No. plies : 1x45mm | Design spacing : 900mm | No. of : 1 | Building type: Residential | Station : 4673mm

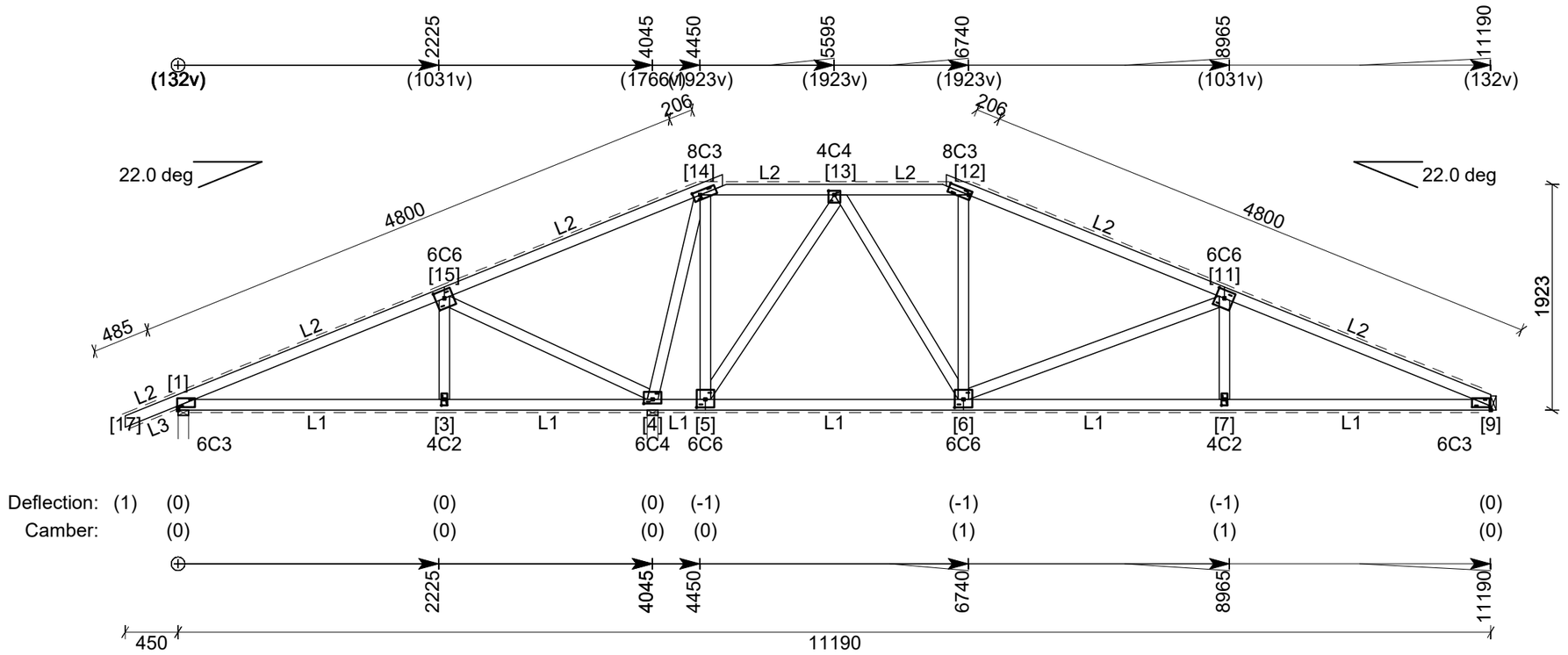

Linings

L1: 13mm Gib-board (8.5 kg/sq.m).
Battens @ 600mm.
L2: Pressed metal tiles (7.5 kg/sq.m).
Battens @ 900mm (Restraints @ 1800mm).
L3: Fibrecement (4.5mm) (7.7 kg/sq.m).
Battens @ 600mm.

Timber

Top Chords	1 / 90x45 MSG8 H12 uno
Bottom Chords	1 / 90x45 MSG8 H12 uno
Webs	1 / 90x45 MSG8 H12 uno
TC2 (12-14)	1 / 90x45 MSG10 H12

Notes

1. Deflection = permanent load deflection including creep (negative = downward movement).
2. Overhang condition: Metal fascia.
3. Refer to Pryda Installation Guide for full bracing details.
4. Refer to layout for overall truss bracing.
5. Truss close to gable end: NO

Major supports and factored reactions

Joint	Type	Width	Perm.	Max. down (LC)	Uplift	Tie-down	Connector
1	Wall Ext	90	0.7 kN	2.2 kN (Gc+Qj)	-0.9 kN	1/NPPC4	-
9	Truss Chord	45	1.2 kN	2.7 kN (Gc+Qj)	-1.9 kN	-	FB4590
4	Wall Int	90	2.6 kN	5.2 kN (Gc+Wd3)	-3.7 kN	1/NPPC4	-

Note: Refer to Truss Connections Report / Producer Statement for fixing details.

ABA20220988
APPROVED - Site Copy
Hastings District Council
20/09/2022

TRUSS DETAILS (DESIGN)

Job Ref: 7011Q

Truss Reference : TG2 (Single Truss)

Truss type: Truncated Girder | No. plies : 1x45mm | Design spacing : 900mm | No. of : 1 | Building type: Residential | Station : 3773mm

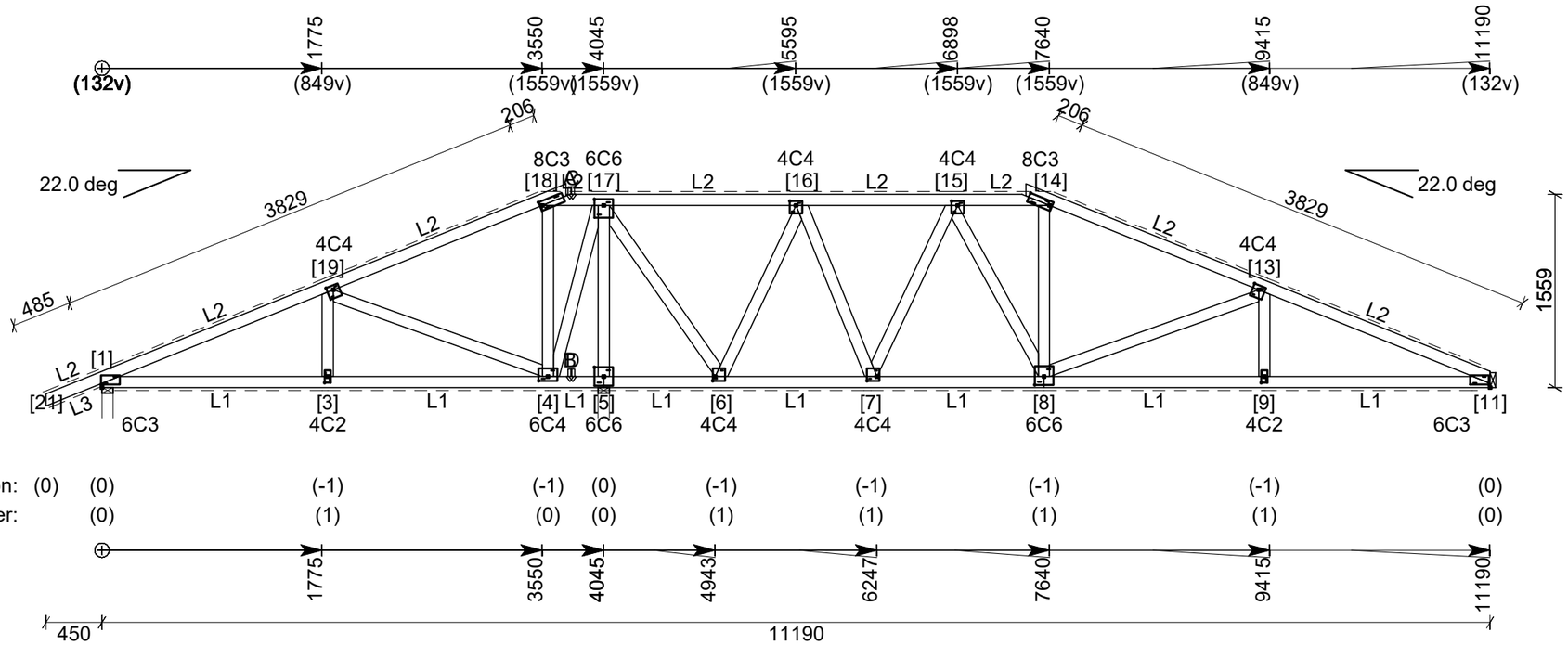

Linings

L1: 13mm Gib-board (8.5 kg/sq.m).
Battens @ 600mm.
L2: Pressed metal tiles (7.5 kg/sq.m).
Battens @ 900mm (Restraints @ 1800mm).
L3: Fibrecement (4.5mm) (7.7 kg/sq.m).
Battens @ 600mm.

Timber

Top Chords	1 / 90x45 MSG8 H12 uno
Bottom Chords	1 / 90x45 MSG8 H12 uno
Webs	1 / 90x45 MSG8 H12 uno

Supported trusses / Applied point loads

A: H4 (3772) B: H4 (3772)
C: J6 (3795) D: J6 (3795)
Note: numbers in brackets denote distance from left of truss.

Notes

1. Deflection = permanent load deflection including creep (negative = downward movement).
2. Overhang condition: Metal fascia.
3. Refer to Pryda Installation Guide for full bracing details.
4. Refer to layout for overall truss bracing.
5. Truss close to gable end: NO

Major supports and factored reactions

Joint	Type	Width	Perm.	Max. down (LC)	Uplift	Tie-down	Connector
1	Wall Ext	90	0.8 kN	2.3 kN (Gc+Qj)	-1.1 kN	1/NPPC4	-
11	Truss Chord	45	1.2 kN	2.7 kN (Gc+Qj)	-1.7 kN	-	FB4590
5	Wall Int	90	4.6 kN	8.4 kN (Gc+Wd3)	-6.2 kN	2/NPPC4	-

Note: Refer to Truss Connections Report / Producer Statement for fixing details.

TRUSS DETAILS (DESIGN)

ABA20220988
APPROVED - Site Copy
Hastings District Council
20/09/2022

Job Ref: 7011Q

Truss Reference : 34 (Single Truss)

Truss type: Standard | No. plies : 1x45mm | Design spacing : 753mm | No. of : 1 | Building type: Residential

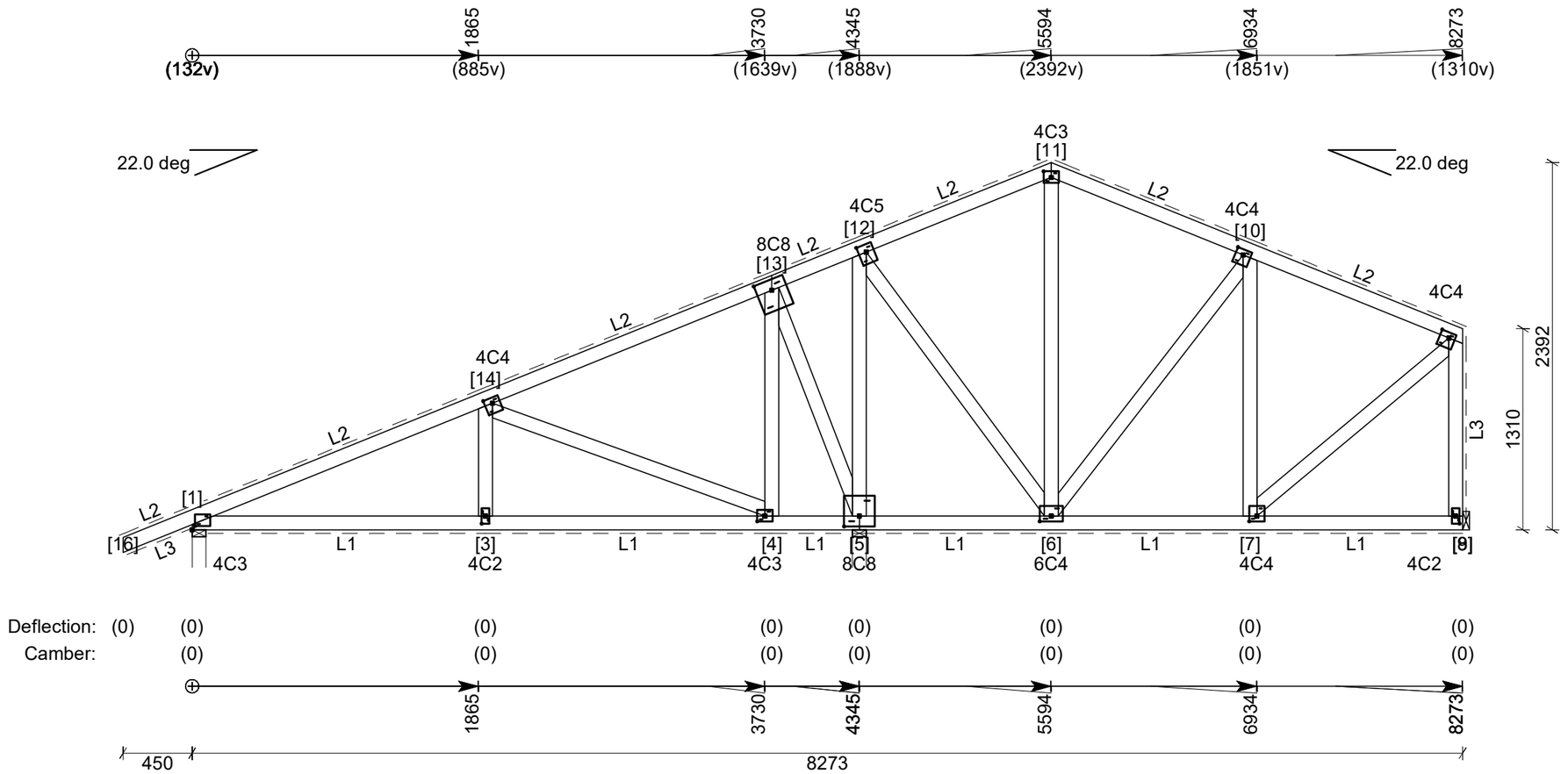

Linings

L1: 13mm Gib-board (8.5 kg/sq.m).
Battens @ 600mm.
L2: Pressed metal tiles (7.5 kg/sq.m).
Battens @ 900mm (Restraints @ 1800mm).
L3: Fibrecement (4.5mm) (7.7 kg/sq.m).
Battens @ 600mm.

Timber

Top Chords	1 / 90x45 MSG8 H12 uno
Bottom Chords	1 / 90x45 MSG8 H12 uno
Webs	1 / 90x45 MSG8 H12 uno

Notes

1. Deflection = permanent load deflection including creep (negative = downward movement).
2. Overhang condition: Metal fascia.
3. Refer to Pryda Installation Guide for full bracing details.
4. Refer to layout for overall truss bracing.
5. Truss close to gable end: NO

Major supports and factored reactions

Joint	Type	Width	Perm.	Max. down (LC)	Uplift	Tie-down	Connector
1	Wall Ext	90	0.7 kN	2.3 kN (Gc+Qj)	-1.0 kN	1/NPPC4	-
8	Truss Chord	45	0.6 kN	2.5 kN (Gc+Qj)	-0.8 kN	-	FB4590
5	Wall Int	90	1.6 kN	3.3 kN (Gc+Wd3)	-2.3 kN	1/NPPC4	-

Note: Refer to Truss Connections Report / Producer Statement for fixing details.

ABA20220988
APPROVED - Site Copy
Hastings District Council
20/09/2022

TRUSS DETAILS (DESIGN)

Job Ref: 7011Q

Truss Reference : TC2 (Single Truss)

Truss type: Truncated Standard | No. plies : 1x45mm | Design spacing : 900mm | No. of : 1 | Building type: Residential | Station : 4672mm

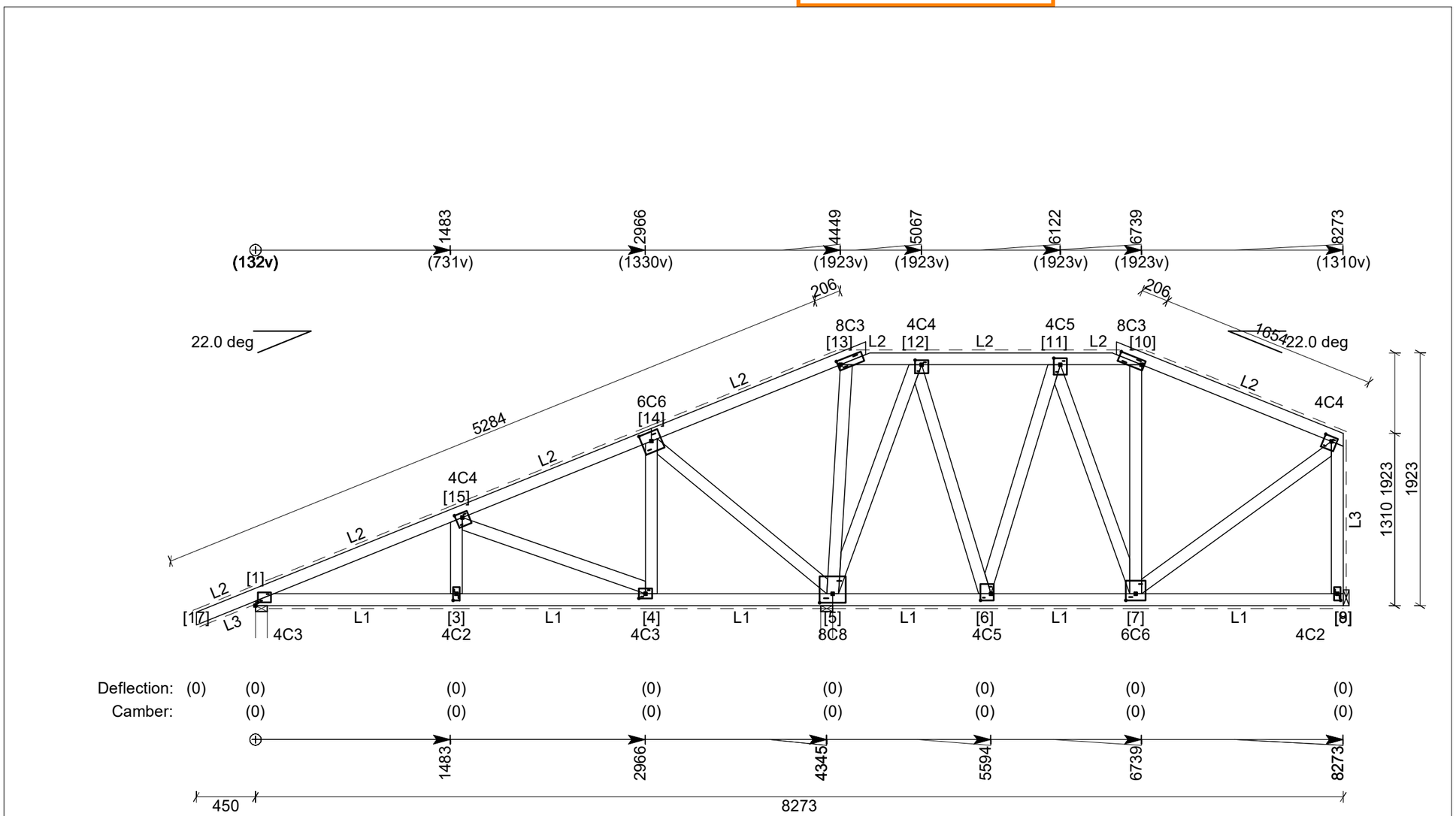

Linings

L1: 13mm Gib-board (8.5 kg/sq.m).
Battens @ 600mm.
L2: Pressed metal tiles (7.5 kg/sq.m).
Battens @ 900mm (Restraints @ 1800mm).
L3: Fibrecement (4.5mm) (7.7 kg/sq.m).
Battens @ 600mm.

Timber

Top Chords	1 / 90x45 MSG8 H12 uno
Bottom Chords	1 / 90x45 MSG8 H12 uno
Webs	1 / 90x45 MSG8 H12 uno
TC2 (10-13)	1 / 90x45 MSG10 H12

Notes

1. Deflection = permanent load deflection including creep (negative = downward movement).
2. Overhang condition: Metal fascia.
3. Refer to Pryda Installation Guide for full bracing details.
4. Refer to layout for overall truss bracing.
5. Truss close to gable end: NO

Major supports and factored reactions

Joint	Type	Width	Perm.	Max. down (LC)	Uplift	Tie-down	Connector
1	Wall Ext	90	0.8 kN	2.3 kN (Gc+Qj)	-1.1 kN	1/NPPC4	-
8	Truss Chord	45	0.6 kN	2.5 kN (Gc+Qj)	-0.8 kN	-	FB4590
5	Wall Int	90	2.1 kN	4.0 kN (Gc+Wd3)	-2.8 kN	1/NPPC4	-

Note: Refer to Truss Connections Report / Producer Statement for fixing details.

Tumu Frame _Truss
Stortford Lodge, PO Box 2308, Hastings, , Ph (06) 879-7850, Fax (06) 879-6468

ABA20220988
APPROVED - Site Copy
Hastings District Council
20/09/2022

TRUSS DETAILS (DESIGN)

Job Ref: 7011Q

Truss Reference : T01 (Single Truss)

Truss type: Truncated Standard | No. plies : 1x45mm | Design spacing : 900mm | No. of : 1 | Building type: Residential | Station : 3772mm

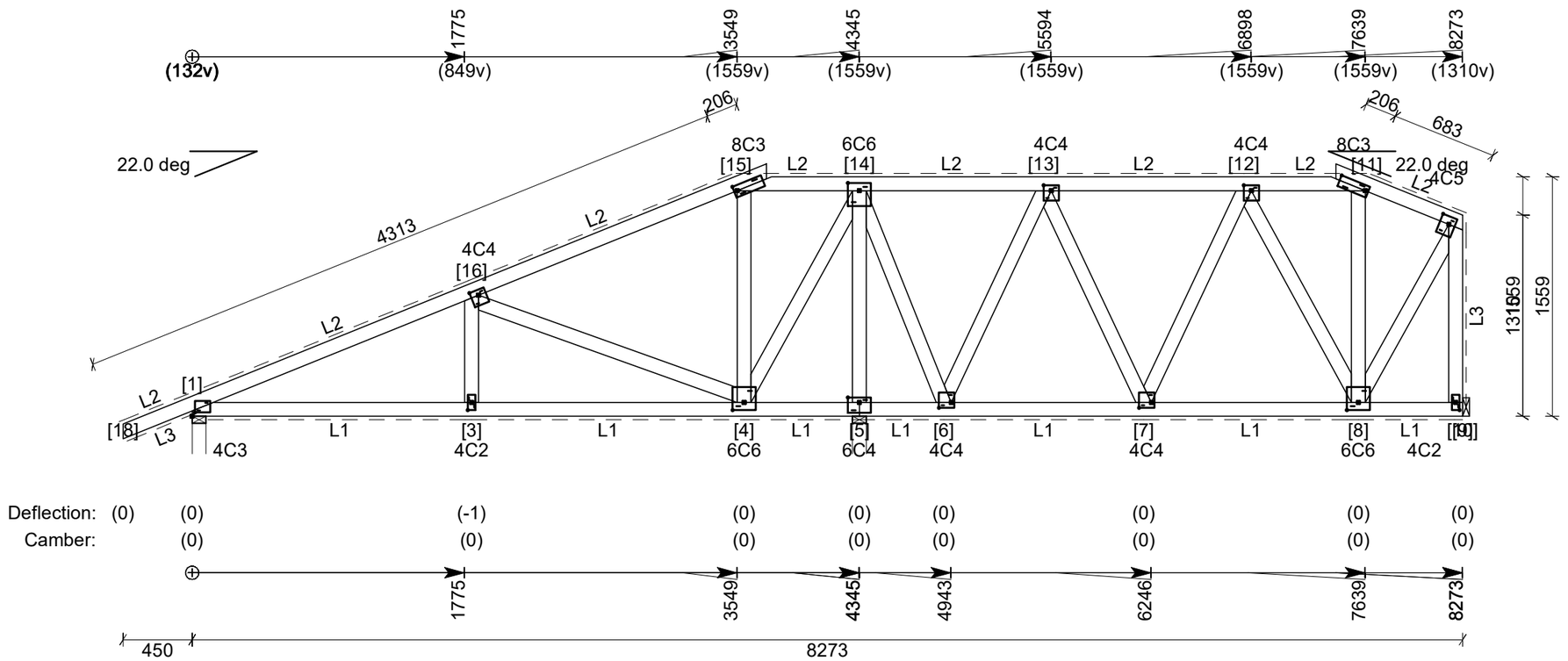

Linings

L1: 13mm Gib-board (8.5 kg/sq.m).
Battens @ 600mm.
L2: Pressed metal tiles (7.5 kg/sq.m).
Battens @ 900mm (Restraints @ 1800mm).
L3: Fibrecement (4.5mm) (7.7 kg/sq.m).
Battens @ 600mm.

Timber

Top Chords	1 / 90x45 MSG8 H12 uno
Bottom Chords	1 / 90x45 MSG8 H12 uno
Webs	1 / 90x45 MSG8 H12 uno

Notes

1. Deflection = permanent load deflection including creep (negative = downward movement).
2. Overhang condition: Metal fascia.
3. Refer to Pryda Installation Guide for full bracing details.
4. Refer to layout for overall truss bracing.
5. Truss close to gable end: NO

Major supports and factored reactions

Joint	Type	Width	Perm.	Max. down (LC)	Uplift	Tie-down	Connector
1	Wall Ext	90	0.9 kN	2.4 kN (Gc+Qj)	-1.2 kN	1/NPPC4	-
9	Truss Chord	45	0.7 kN	2.6 kN (Gc+Qj)	-0.9 kN	-	FB4590
5	Wall Int	90	1.8 kN	3.5 kN (Gc+Qj)	-2.7 kN	1/NPPC4	-

Note: Refer to Truss Connections Report / Producer Statement for fixing details.

Tumu Frame _Truss
Stortford Lodge, PO Box 2308, Hastings, , Ph (06) 879-7850, Fax (06) 879-6468

TRUSS DETAILS (DESIGN)

ABA20220988
APPROVED - Site Copy
Hastings District Council
20/09/2022

Job Ref: 7011Q

Truss Reference: MTC1 (Single Truss)

Truss type: Mono Truncated Girder | No. plies : 1x45mm | Design spacing : 900mm | No. of : 1 | Building type: Residential | Station : 2872mm

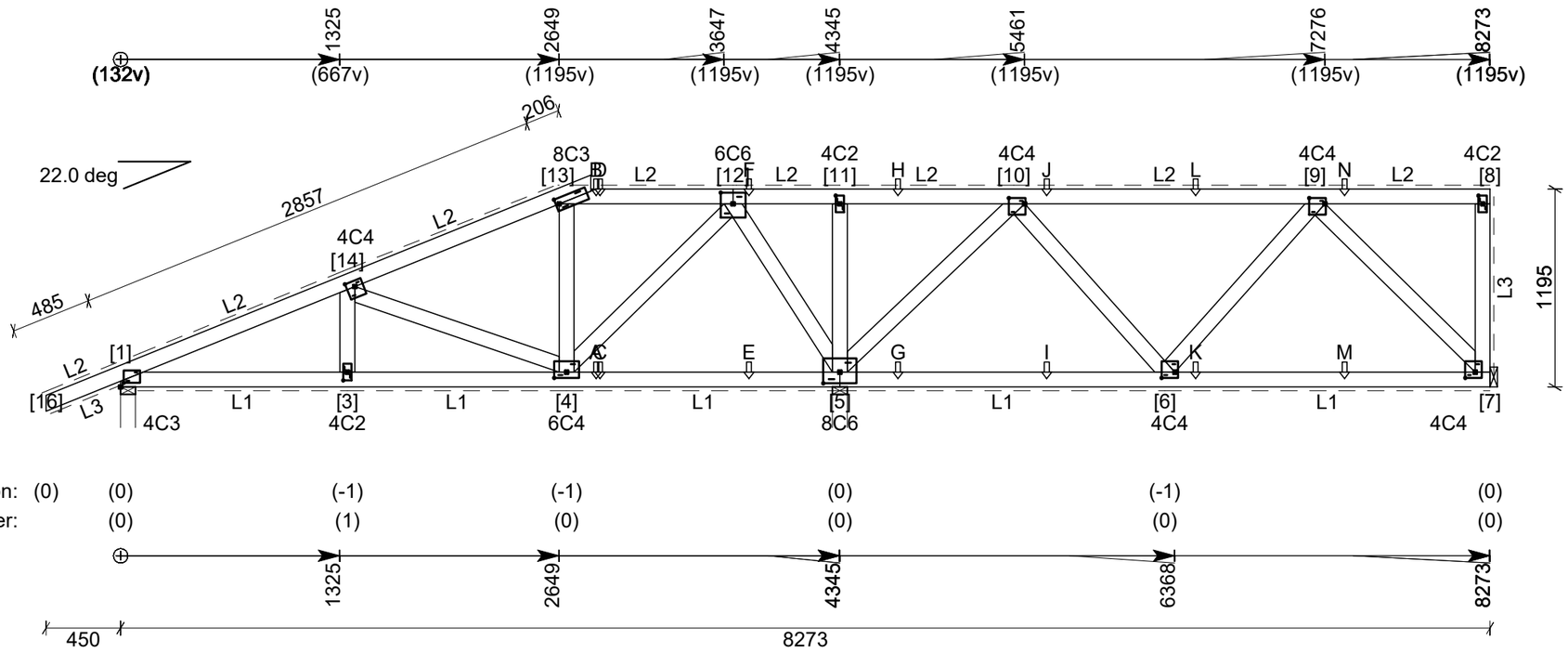

Linings

L1: 13mm Gib-board (8.5 kg/sq.m).
Battens @ 600mm.
L2: Pressed metal tiles (7.5 kg/sq.m).
Battens @ 900mm (Restraints @ 1800mm).
L3: Fibrecement (4.5mm) (7.7 kg/sq.m).
Battens @ 600mm.

Timber

Top Chords	1 / 90x45 MSG8 H12 uno
Bottom Chords	1 / 90x45 MSG8 H12 uno
Webs	1 / 90x45 MSG8 H12 uno

Supported trusses / Applied point loads

A: H3 (2873)	B: H3 (2873)
C: J2 (2896)	D: J2 (2896)
E: J3 (3796)	F: J3 (3796)
G: J4 (4696)	H: J4 (4696)
I: J5 (5595)	J: J5 (5595)
K: J4 (6494)	L: J4 (6494)
M: J3 (7394)	N: J3 (7394)

Note: numbers in brackets denote distance from left of truss.

Notes

1. Deflection = permanent load deflection including creep (negative = downward movement).
2. Overhang condition: Metal fascia.
3. Refer to Pryda Installation Guide for full bracing details.
4. Refer to layout for overall truss bracing.
5. Truss close to gable end: NO

Major supports and factored reactions

Joint	Type	Width	Perm.	Max. down (LC)	Uplift	Tie-down	Connector
1	Wall Ext	90	1.1 kN	2.6 kN (Gc+Qj)	-1.4 kN	1/NPPC4	-
7	Truss Chord	45	1.0 kN	2.5 kN (Gc+Qj)	-2.1 kN	-	FB4590
5	Wall Int	90	4.3 kN	8.5 kN (Gc+Wd1)	-6.9 kN	2/NPPC6	-

Note: Refer to Truss Connections Report / Producer Statement for fixing details.

ABA20220988
APPROVED - Site Copy
Hastings District Council
20/09/2022

TRUSS DETAILS (DESIGN)

Job Ref: 7011Q

Truss Reference: TC01 (Single Truss)

Truss type: Truncated Girder | No. plies : 1x45mm | Design spacing : 900mm | No. of : 1 | Building type: Residential | Station : 2673mm

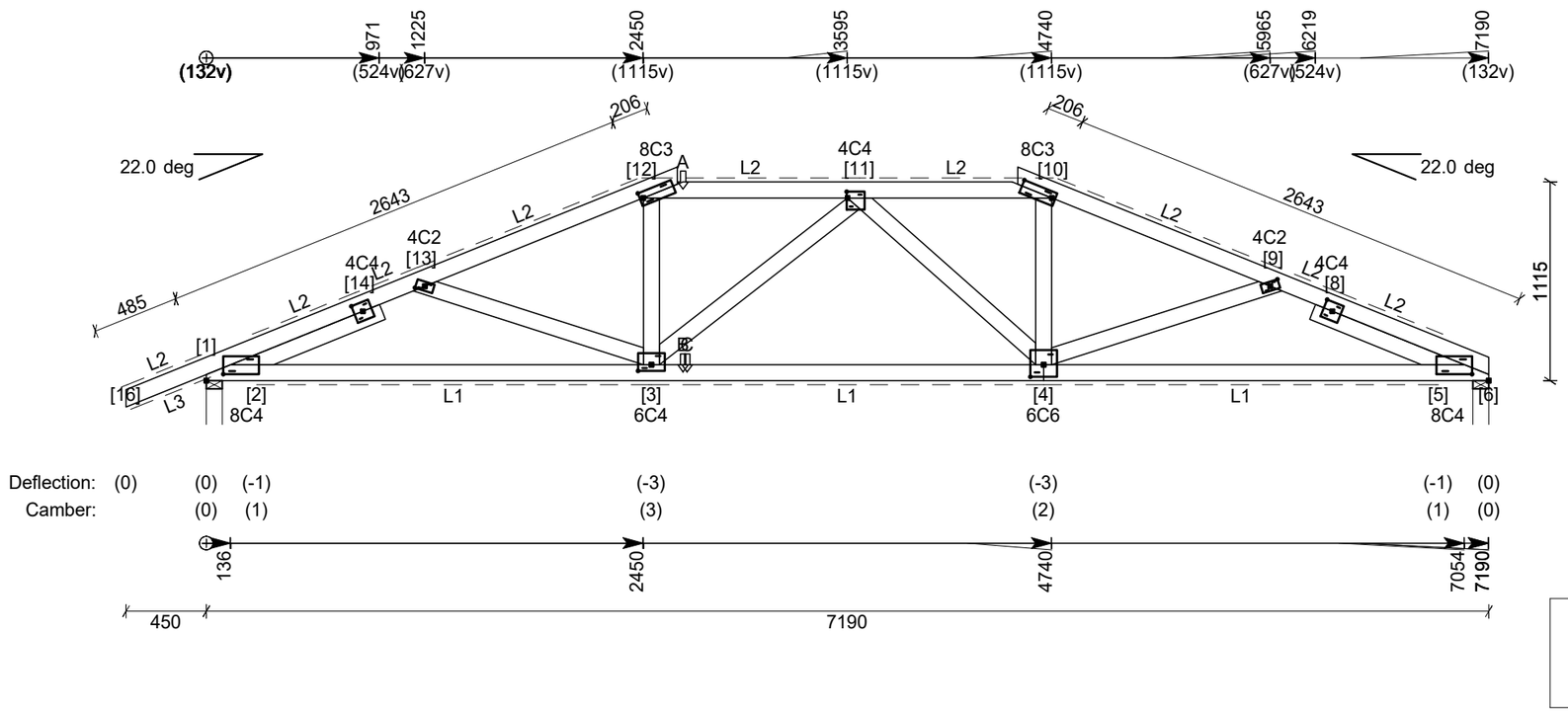

Side Symbol

Front	+
Back	○
Both	⊕

Linings

L1: 13mm Gib-board (8.5 kg/sq.m).
Battens @ 600mm.
L2: Pressed metal tiles (7.5 kg/sq.m).
Battens @ 900mm (Restraints @ 1800mm).
L3: Fibrecement (4.5mm) (7.7 kg/sq.m).
Battens @ 600mm.

Timber

Top Chords	1 / 90x45 MSG8 H12 uno
Bottom Chords	1 / 90x45 MSG10 H12 uno
Webs	1 / 90x45 MSG8 H12 uno

TC3 (12-16) 1 / 90x45 MSG10 H12

Supported trusses / Applied point loads

A: H2 (2673) B: H2 (2673)
C: MG1 (2696)
Note: numbers in brackets denote distance from left of truss.

Notes

1. Deflection = permanent load deflection including creep (negative = downward movement).
2. Overhang condition: Metal fascia.
3. Refer to Pryda Installation Guide for full bracing details.
4. Refer to layout for overall truss bracing.
5. Truss close to gable end: NO

Major supports and factored reactions

Joint	Type	Width	Perm.	Max. down (LC)	Uplift	Tie-down	Connector
1	Wall Ext	90	2.7 kN	5.0 kN (Gc+Wd3)	-4.4 kN	2/NPPC4	-
6	Wall Int	90	2.0 kN	3.8 kN (Gc+Wd3)	-3.3 kN	1/NPPC4	-

Note: Refer to Truss Connections Report / Producer Statement for fixing details.

Tumu Frame _Truss
Stortford Lodge, PO Box 2308, Hastings, , Ph (06) 879-7850, Fax (06) 879-6468

ABA20220988
APPROVED - Site Copy
Hastings District Council
20/09/2022

TRUSS DETAILS (DESIGN)

Job Ref: 7011Q

Truss Reference: 35 (Single Truss)

Truss type: Standard | No. plies : 1x45mm | Design spacing : 845mm | No. of : 1 | Building type: Residential

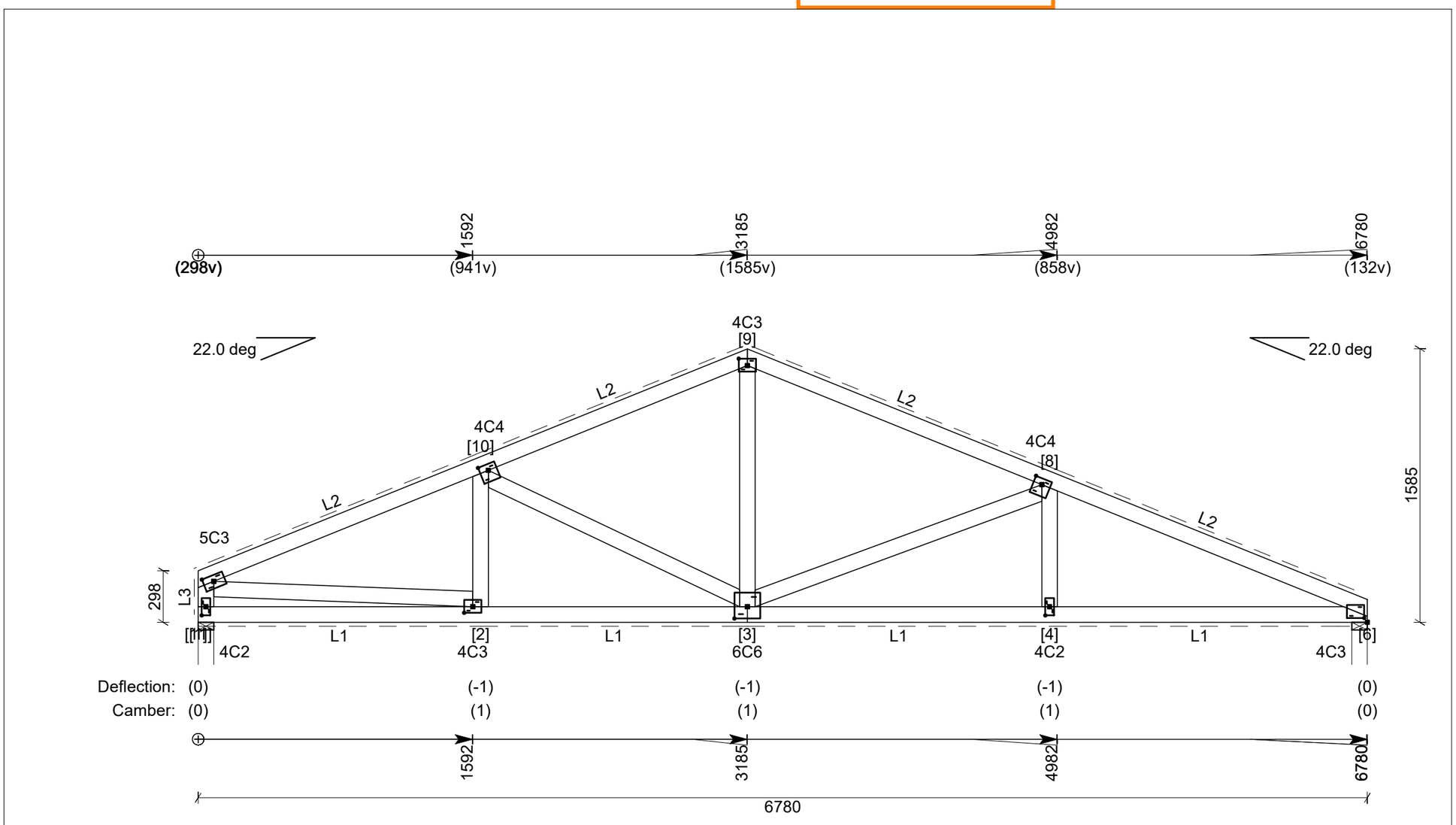

Linings

L1: 13mm Gib-board (8.5 kg/sq.m).
Battens @ 600mm.
L2: Pressed metal tiles (7.5 kg/sq.m).
Battens @ 900mm (Restraints @ 1800mm).
L3: Fibrecement (4.5mm) (7.7 kg/sq.m).
Battens @ 600mm.

Timber

Top Chords	1 / 90x45 MSG8 H12 uno
Bottom Chords	1 / 90x45 MSG8 H12 uno
Webs	1 / 90x45 MSG8 H12 uno

Notes

1. Deflection = permanent load deflection including creep (negative = downward movement).
2. Overhang condition: Metal fascia.
3. Refer to Pryda Installation Guide for full bracing details.
4. Refer to layout for overall truss bracing.
5. Truss close to gable end: YES

Major supports and factored reactions

Joint	Type	Width	Perm.	Max. down (LC)	Uplift	Tie-down	Connector
1	Wall Ext	90	1.2 kN	2.7 kN (Gc+Qj)	-2.2 kN	1/NPPC4	-
6	Wall Int	90	1.2 kN	2.7 kN (Gc+Qj)	-2.2 kN	1/NPPC4	-

Note: Refer to Truss Connections Report / Producer Statement for fixing details.

ABA20220988
APPROVED - Site Copy
Hastings District Council
20/09/2022

TRUSS DETAILS (DESIGN)

Job Ref: 7011Q

Truss Reference : 37 (Single Truss)

Truss type: Standard | No. plies : 1x45mm | Design spacing : 900mm | No. of : 1 | Building type: Residential

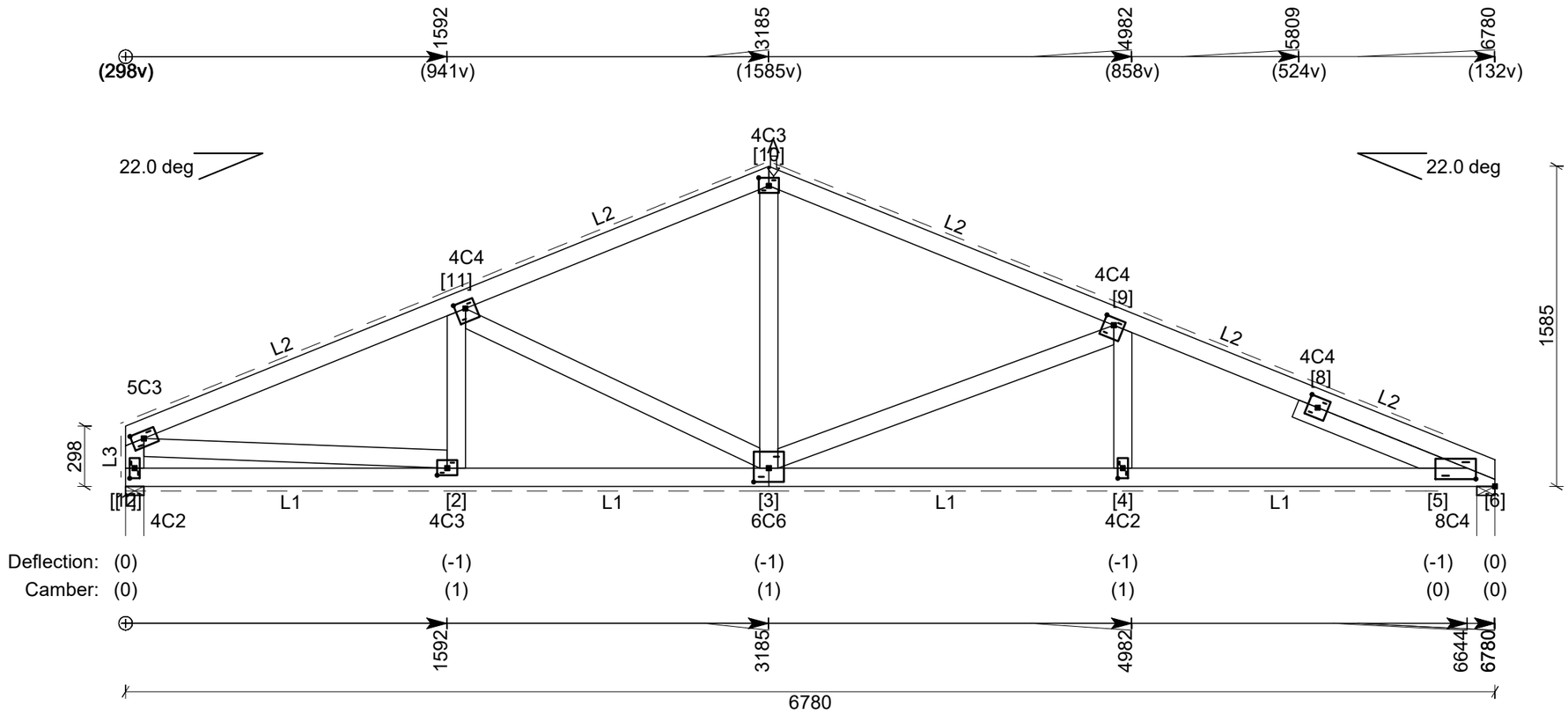

Linings
L1: 13mm Gib-board (8.5 kg/sq.m).
Battens @ 600mm.
L2: Pressed metal tiles (7.5 kg/sq.m).
Battens @ 900mm (Restraints @ 1800mm).
L3: Fibrecement (4.5mm) (7.7 kg/sq.m).
Battens @ 600mm.

Timber

Top Chords	1 / 90x45 MSG8 H12 uno
Bottom Chords	1 / 90x45 MSG8 H12 uno
Webs	1 / 90x45 MSG8 H12 uno

Supported trusses / Applied point loads
A: R1 (3208)
Note: numbers in brackets denote distance from left of truss.

Notes
1. Deflection = permanent load deflection including creep (negative = downward movement).
2. Overhang condition: Metal fascia.
3. Refer to Pryda Installation Guide for full bracing details.
4. Refer to layout for overall truss bracing.
5. Truss close to gable end: NO

Major supports and factored reactions

Joint	Type	Width	Perm.	Max. down (LC)	Uplift	Tie-down	Connector
1	Wall Ext	90	1.3 kN	2.8 kN (Gc+Qj)	-2.0 kN	1/NPPC4	-
6	Wall Int	90	1.3 kN	2.8 kN (Gc+Qj)	-2.0 kN	1/NPPC4	-

Note: Refer to Truss Connections Report / Producer Statement for fixing details.

Tumu Frame _Truss
Stortford Lodge, PO Box 2308, Hastings, , Ph (06) 879-7850, Fax (06) 879-6468

ABA20220988
APPROVED - Site Copy
Hastings District Council
20/09/2022

TRUSS DETAILS (DESIGN)

Job Ref: 7011Q

Truss Reference: MG2 (Single Truss)

Truss type: Mono | No. plies : 1x45mm | Design spacing : 900mm | No. of : 1 | Building type: Residential

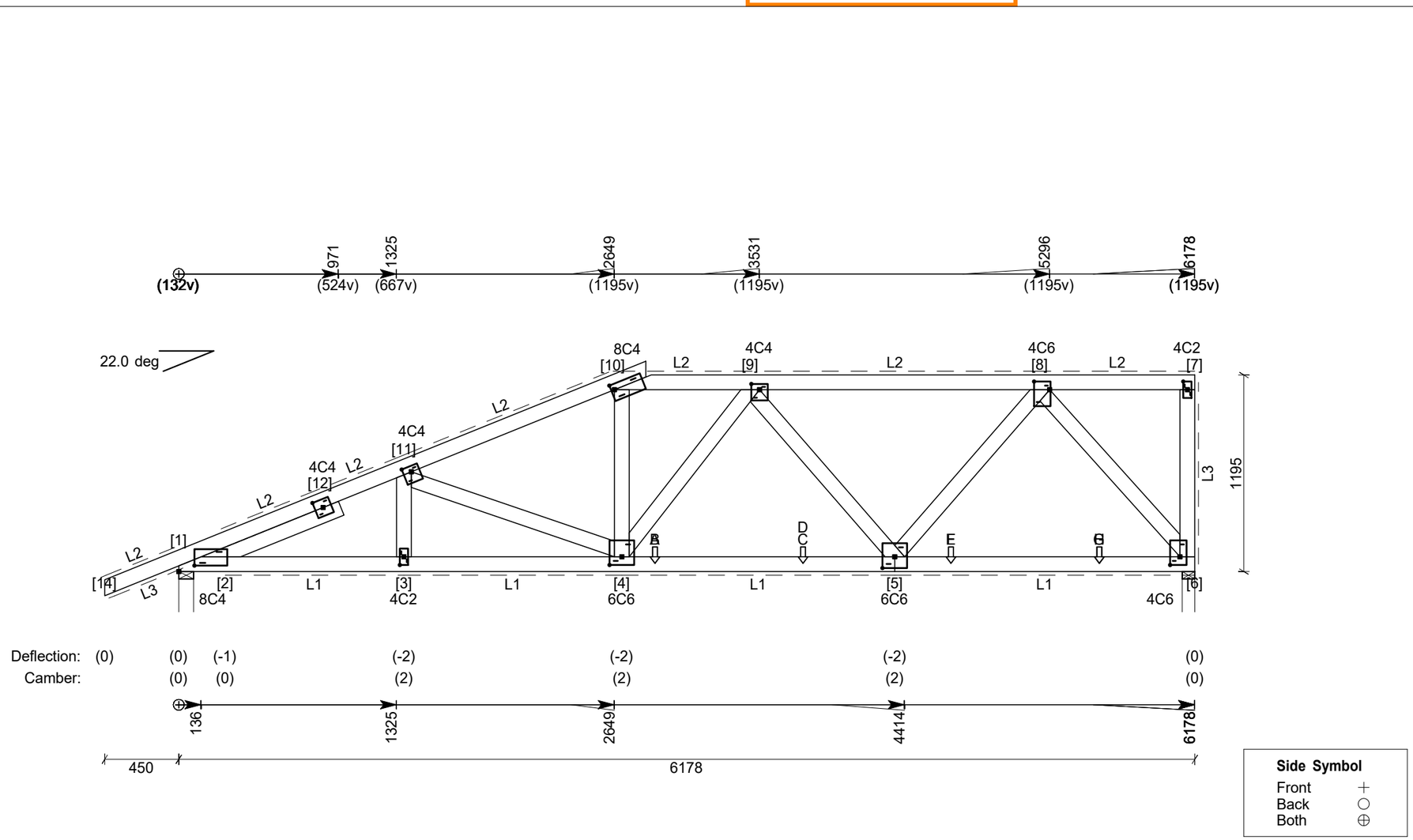

Side Symbol

Front	+
Back	○
Both	⊕

Linings

L1: 13mm Gib-board (8.5 kg/sq.m).
Battens @ 600mm.
L2: Pressed metal tiles (7.5 kg/sq.m).
Battens @ 900mm (Restraints @ 1800mm).
L3: Fibrecement (4.5mm) (7.7 kg/sq.m).
Battens @ 600mm.

Timber

Top Chords	1 / 90x45 hyCHORD H12 uno
Bottom Chords	1 / 90x45 hyCHORD H12 uno
Webs	1 / 90x45 MSG8 H12 uno
TC1 (7-10)	1 / 90x45 MSG10 H12

Supported trusses / Applied point loads

A: M1 (2895)	B: MTG1 (2896)
C: M1 (3796)	D: TS1 (3796)
E: M1 (4695)	F: TS2 (4696)
G: S4 (5596)	H: M1 (5599)

Note: numbers in brackets denote distance from left of truss.

Notes

1. Deflection = permanent load deflection including creep (negative = downward movement).
2. Overhang condition: Metal fascia.
3. Refer to Pryda Installation Guide for full bracing details.
4. Refer to layout for overall truss bracing.
5. Truss close to gable end: YES

Major supports and factored reactions

Joint	Type	Width	Perm.	Max. down (LC)	Uplift	Tie-down	Connector
1	Wall Ext	90	2.9 kN	5.4 kN (Gc+Wd3)	-5.1 kN	2/NPPC4	-
6	Wall Int	77	4.2 kN	7.7 kN (Gc+Q2r)	-9.0 kN	2/NPPC6	-

Note: Refer to Truss Connections Report / Producer Statement for fixing details.

ABA20220988
APPROVED - Site Copy
Hastings District Council
20/09/2022

TRUSS DETAILS (DESIGN)

Job Ref: 7011Q

Truss Reference: 31 (Single Truss)

Truss type: Standard | No. plies : 1x45mm | Design spacing : 628mm | No. of : 1 | Building type: Residential

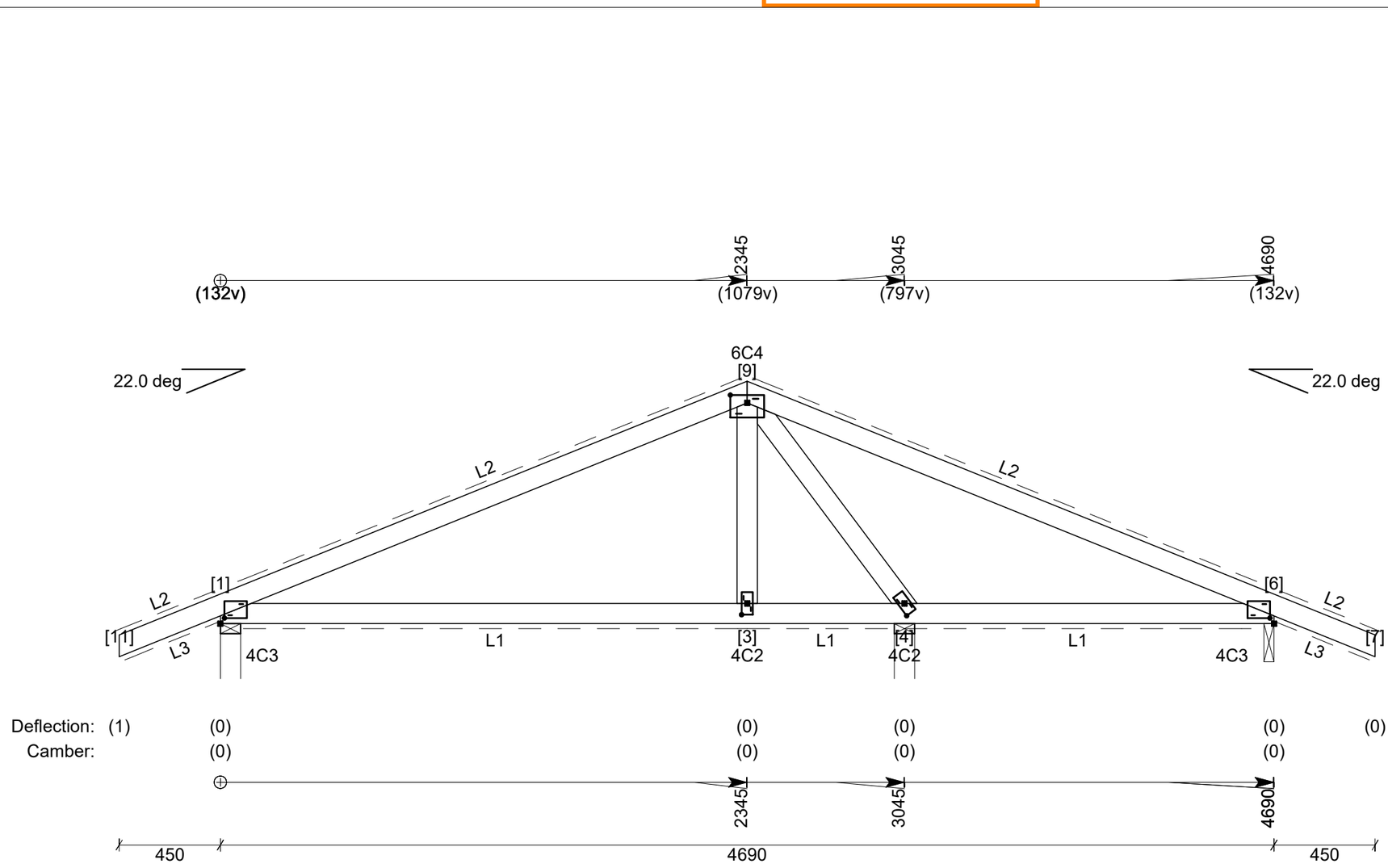

Linings

L1: 13mm Gib-board (8.5 kg/sq.m).
Battens @ 600mm.
L2: Pressed metal tiles (7.5 kg/sq.m).
Battens @ 900mm (Restraints @ 1800mm).
L3: Fibrecement (4.5mm) (7.7 kg/sq.m).
Battens @ 600mm.

Timber

Top Chords	1 / 90x45 MSG8 H12 uno
Bottom Chords	1 / 90x45 MSG8 H12 uno
Webs	1 / 90x45 MSG8 H12 uno

Notes

1. Deflection = permanent load deflection including creep (negative = downward movement).
2. Overhang condition: Metal fascia.
3. Refer to Pryda Installation Guide for full bracing details.
4. Refer to layout for overall truss bracing.
5. Truss close to gable end: YES

Major supports and factored reactions

Joint	Type	Width	Perm.	Max. down (LC)	Uplift	Tie-down	Connector
1	Wall Ext	90	0.6 kN	2.2 kN (Gc+Qj)	-1.2 kN	1/NPPC4	-
6	Beam Int	45	0.5 kN	1.7 kN (Gc+Qj)	-0.9 kN	1/NPPC4	-
4	Wall Ext	90	0.4 kN	1.6 kN (Gc+Qj)	-0.8 kN	1/NPPC4	-

Note: Refer to Truss Connections Report / Producer Statement for fixing details.

Tumu Frame _Truss
Stortford Lodge, PO Box 2308, Hastings, , Ph (06) 879-7850, Fax (06) 879-6468

ABA20220988
APPROVED - Site Copy
Hastings District Council
20/09/2022

TRUSS DETAILS (DESIGN)

Job Ref: 7011Q

Truss Reference : 36 (Single Truss)

Truss type: Standard | No. plies : 1x45mm | Design spacing : 616mm | No. of : 1 | Building type: Residential | D/Gable Station : 0mm

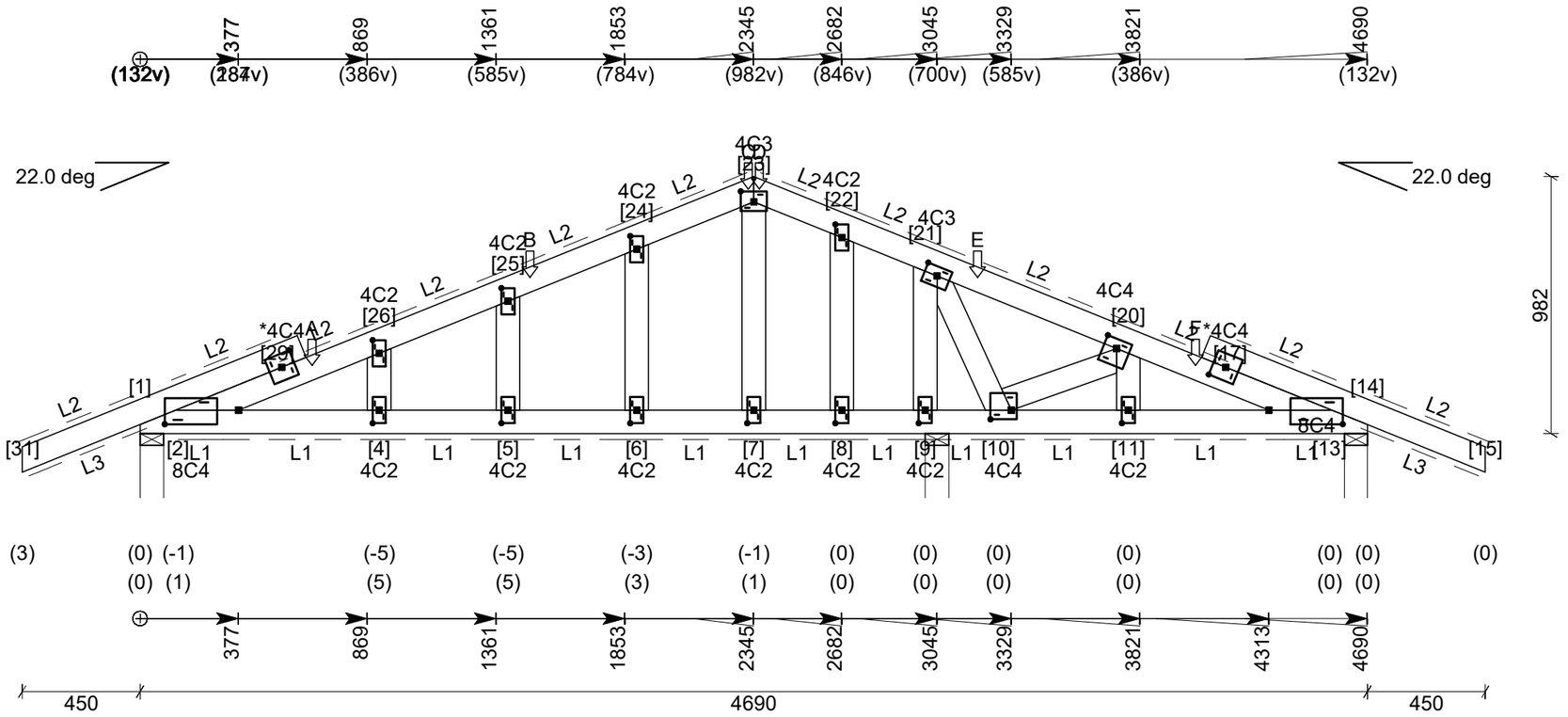

Linings
L1: 13mm Gib-board (8.5 kg/sq.m).
Battens @ 600mm.
L2: Pressed metal tiles (7.5 kg/sq.m).
Battens @ 900mm (Restraints @ 1800mm).
L3: Fibrecement (4.5mm) (7.7 kg/sq.m).
Battens @ 600mm.

Timber

Top Chords	1 / 90x45 MSG8 H12 uno
Bottom Chords	1 / 90x45 MSG10 H12 uno
Webs	1 / 90x45 MSG8 H12 uno
TC3 (23-2)	1 / 90x45 MSG10 H12

Supported trusses / Applied point loads

A: OR1 (657)	B: OR3 (1490)
C: OR2 (2324)	D: OR2 (2366)
E: OR3 (3200)	F: OR1 (4033)

Note: numbers in brackets denote distance from left of truss.

Notes
1. Deflection = permanent load deflection including creep (negative = downward movement).
2. Overhang condition: Metal fascia.
3. Refer to Pryda Installation Guide for full bracing details.
4. Refer to layout for overall truss bracing.
5. Truss close to gable end: YES

Major supports and factored reactions

Joint	Type	Width	Perm.	Max. down (LC)	Uplift	Tie-down	Connector
1	Wall Ext	90	1.1 kN	2.6 kN (Gc+Qj)	-2.4 kN	1/NPPC4	-
14	Wall Ext	88	0.9 kN	2.4 kN (Gc+Qj)	-1.9 kN	1/NPPC4	-
9	Wall Ext	90	0.7 kN	2.2 kN (Gc+Qj)	-1.9 kN	1/NPPC4	-

Note: Refer to Truss Connections Report / Producer Statement for fixing details.

Tumu Frame _Truss
Stortford Lodge, PO Box 2308, Hastings, , Ph (06) 879-7850, Fax (06) 879-6468

ABA20220988
APPROVED - Site Copy
Hastings District Council
20/09/2022

TRUSS DETAILS (DESIGN)

Job Ref: 7011Q

Truss Reference : SC2 (Single Truss)

Truss type: Standard | No. plies : 1x45mm | Design spacing : 900mm | No. of : 1 | Building type: Residential

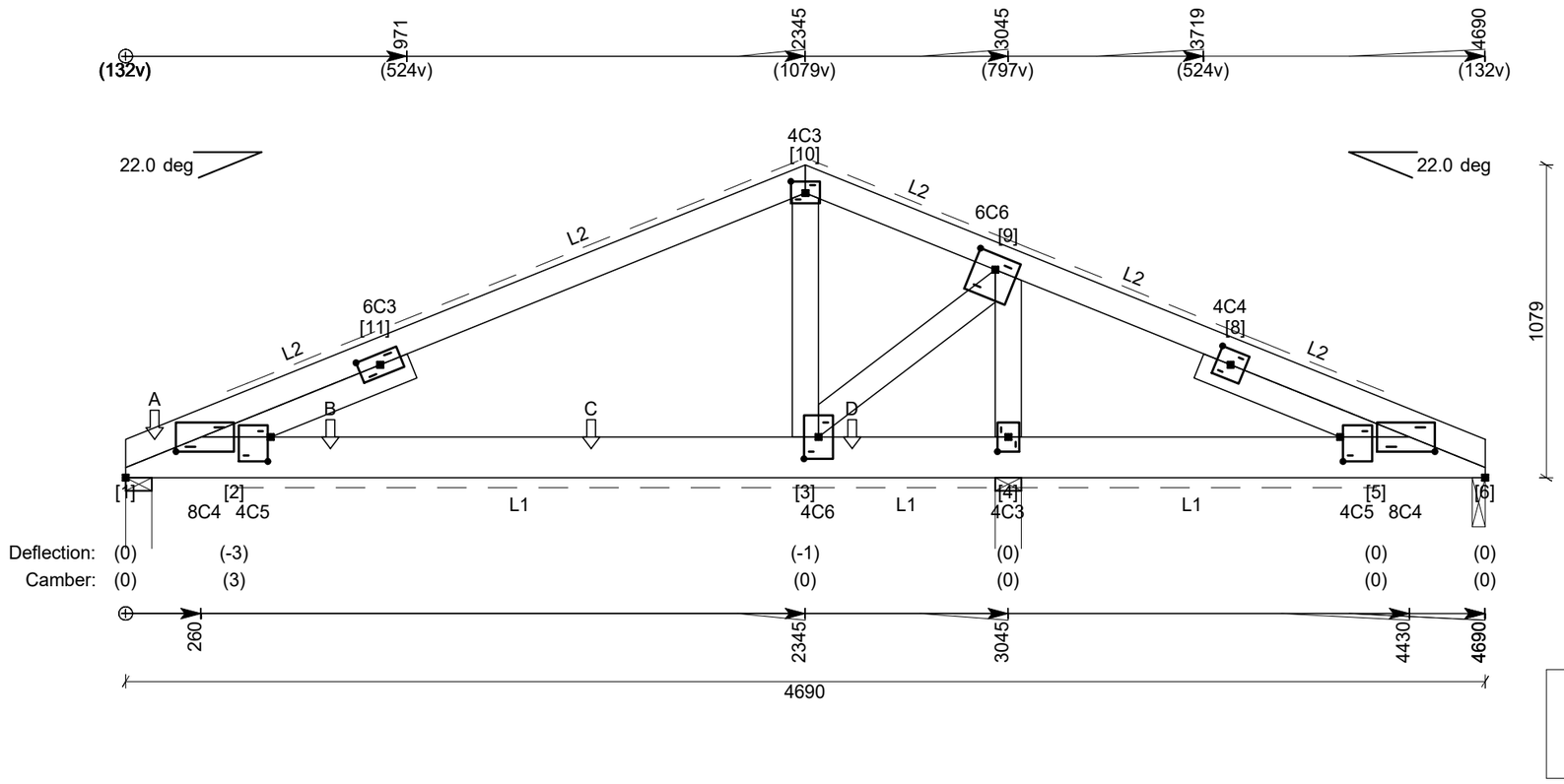

Side Symbol

Front	+
Back	○
Both	⊕

Linings

L1: 13mm Gib-board (8.5 kg/sq.m).
Battens @ 600mm.
L2: Pressed metal tiles (7.5 kg/sq.m).
Battens @ 900mm (Restraints @ 1800mm).

Timber

Top Chords	1 / 90x45 hyCHORD H12 uno
Bottom Chords	1 / 140x45 hyCHORD H12 uno
Webs	1 / 90x45 MSG8 H12 uno
TC1 (6-10)	1 / 90x45 MSG8 H12

Supported trusses / Applied point loads

A: S3 (100) B: S3 (706)
C: TS3 (1606) D: TG2 (2506)
Note: numbers in brackets denote distance from left of truss.

Notes

1. Deflection = permanent load deflection including creep (negative = downward movement).
2. Overhang condition: Metal fascia.
3. Refer to Pryda Installation Guide for full bracing details.
4. Refer to layout for overall truss bracing.
5. Truss close to gable end: YES

Major supports and factored reactions

Joint	Type	Width	Perm.	Max. down (LC)	Uplift	Tie-down	Connector
1	Wall Ext	90	4.3 kN	8.5 kN (Gc+Wd1)	-6.6 kN	2/NPPC4	-
6	Beam Int	45	0.2 kN	1.4 kN (Gc+Qj)	-0.7 kN	2/90x3.15 dia Skew Nails	-
4	Wall Ext	90	3.0 kN	5.6 kN (Gc+Wd4)	-4.5 kN	2/NPPC4	-

Note: Refer to Truss Connections Report / Producer Statement for fixing details.

ABA20220988
APPROVED - Site Copy
Hastings District Council
20/09/2022

TRUSS DETAILS (DESIGN)

Job Ref: 7011Q

Truss Reference: 32 (Single Truss)

Truss type: Standard | No. plies : 1x45mm | Design spacing : 674mm | No. of : 2 | Building type: Residential

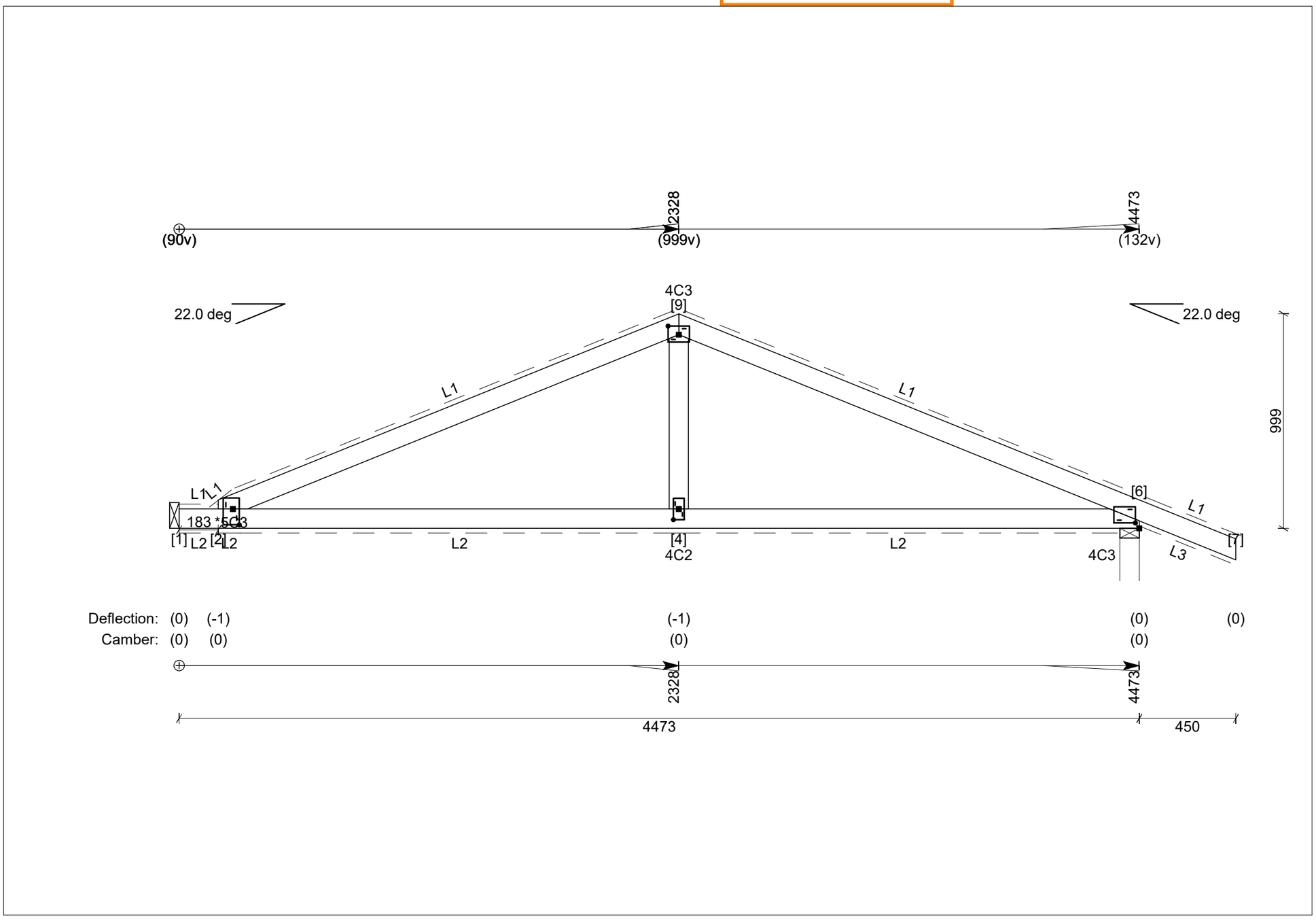

Linings

L1: Pressed metal tiles (7.5 kg/sq.m).
Battens @ 900mm (Restraints @ 1800mm).
L2: 13mm Gib-board (8.5 kg/sq.m).
Battens @ 600mm.
L3: Fibrecement (4.5mm) (7.7 kg/sq.m).
Battens @ 600mm.

Timber

Top Chords	1 / 90x45 MSG8 H12 uno
Bottom Chords	1 / 90x45 MSG8 H12 uno
Webs	1 / 90x45 MSG8 H12 uno

Notes

1. Deflection = permanent load deflection including creep (negative = downward movement).
2. Overhang condition: Metal fascia.
3. Refer to Pryda Installation Guide for full bracing details.
4. Refer to layout for overall truss bracing.
5. Truss close to gable end: YES

Major supports and factored reactions

Joint	Type	Width	Perm.	Max. down (LC)	Uplift	Tie-down	Connector
1	Truss Chord	45	0.6 kN	2.1 kN (Gc+Qj)	-1.4 kN	-	FB4590
6	Wall Ext	90	0.7 kN	2.3 kN (Gc+Qj)	-1.5 kN	1/NPPC4	-

Note: Refer to Truss Connections Report / Producer Statement for fixing details.

ABA20220988
APPROVED - Site Copy
Hastings District Council
20/09/2022

TRUSS DETAILS (DESIGN)

Job Ref: 7011Q

Truss Reference : 30 (Single Truss)

Truss type: Standard | No. plies : 1x45mm | Design spacing : 781mm | No. of : 1 | Building type: Residential

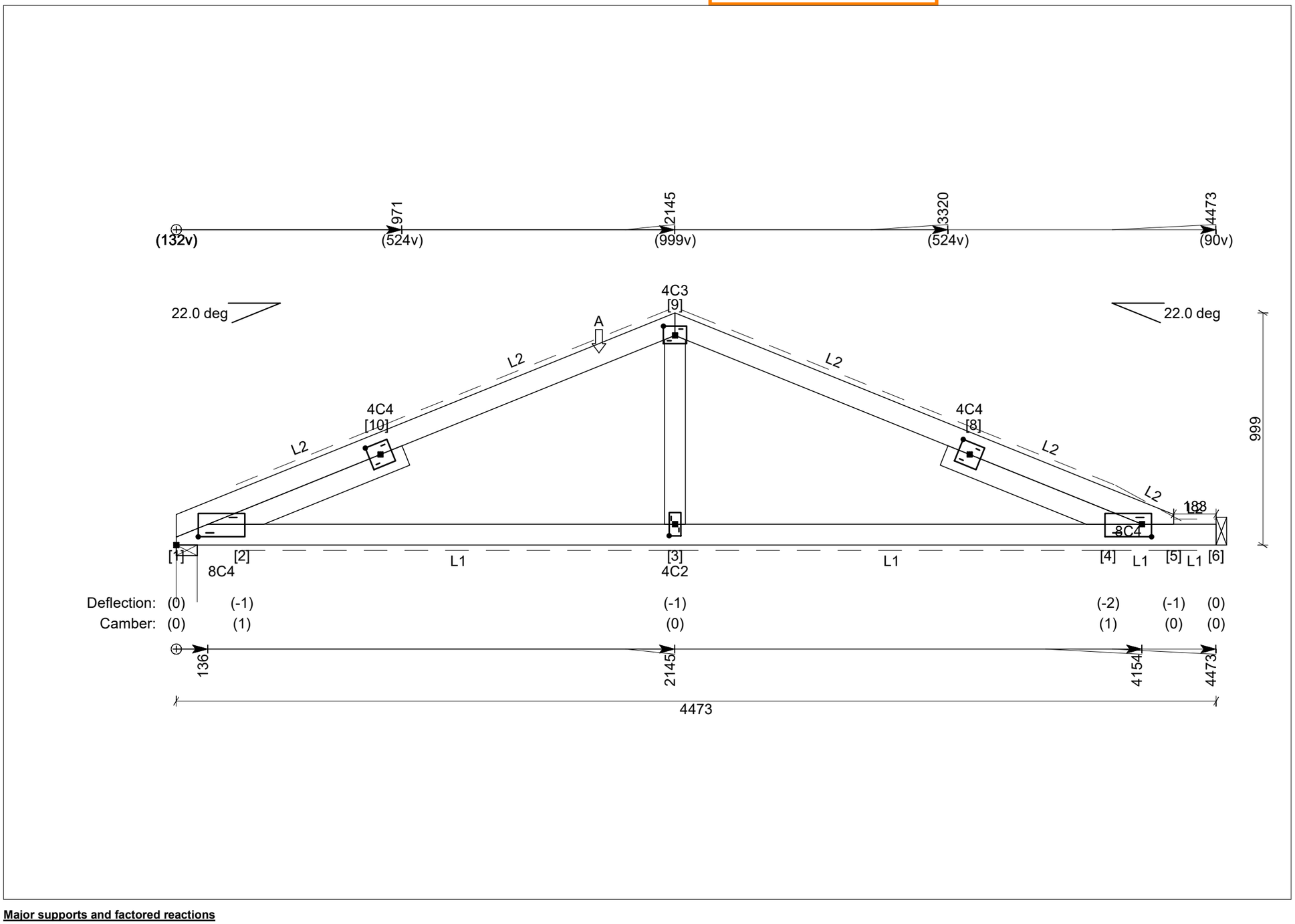

Linings
L1: 13mm Gib-board (8.5 kg/sq.m).
Battens @ 600mm.
L2: Pressed metal tiles (7.5 kg/sq.m).
Battens @ 900mm (Restraints @ 1800mm).

Timber

Top Chords	1 / 90x45 MSG8 H12 uno
Bottom Chords	1 / 90x45 MSG8 H12 uno
Webs	1 / 90x45 MSG8 H12 uno
TC1 (5-9)	1 / 90x45 MSG10 H12

Supported trusses / Applied point loads
A: R1 (1818)
Note: numbers in brackets denote distance from left of truss.

Notes
1. Deflection = permanent load deflection including creep (negative = downward movement).
2. Overhang condition: Metal fascia.
3. Refer to Pryda Installation Guide for full bracing details.
4. Refer to layout for overall truss bracing.
5. Truss close to gable end: YES

Major supports and factored reactions

Joint	Type	Width	Perm.	Max. down (LC)	Uplift	Tie-down	Connector
1	Wall Int	90	0.7 kN	2.3 kN (Gc+Qj)	-1.7 kN	1/NPPC4	-
6	Truss Chord	45	0.7 kN	2.2 kN (Gc+Qj)	-1.6 kN	-	FB4590

Note: Refer to Truss Connections Report / Producer Statement for fixing details.

ABA20220988
APPROVED - Site Copy
Hastings District Council
20/09/2022

TRUSS DETAILS (DESIGN)

Job Ref: 7011Q

Truss Reference: 01 (Single Truss)

Truss type: Standard | No. plies : 1x45mm | Design spacing : 900mm | No. of : 1 | Building type: Residential | D/Gable Station : 2145mm

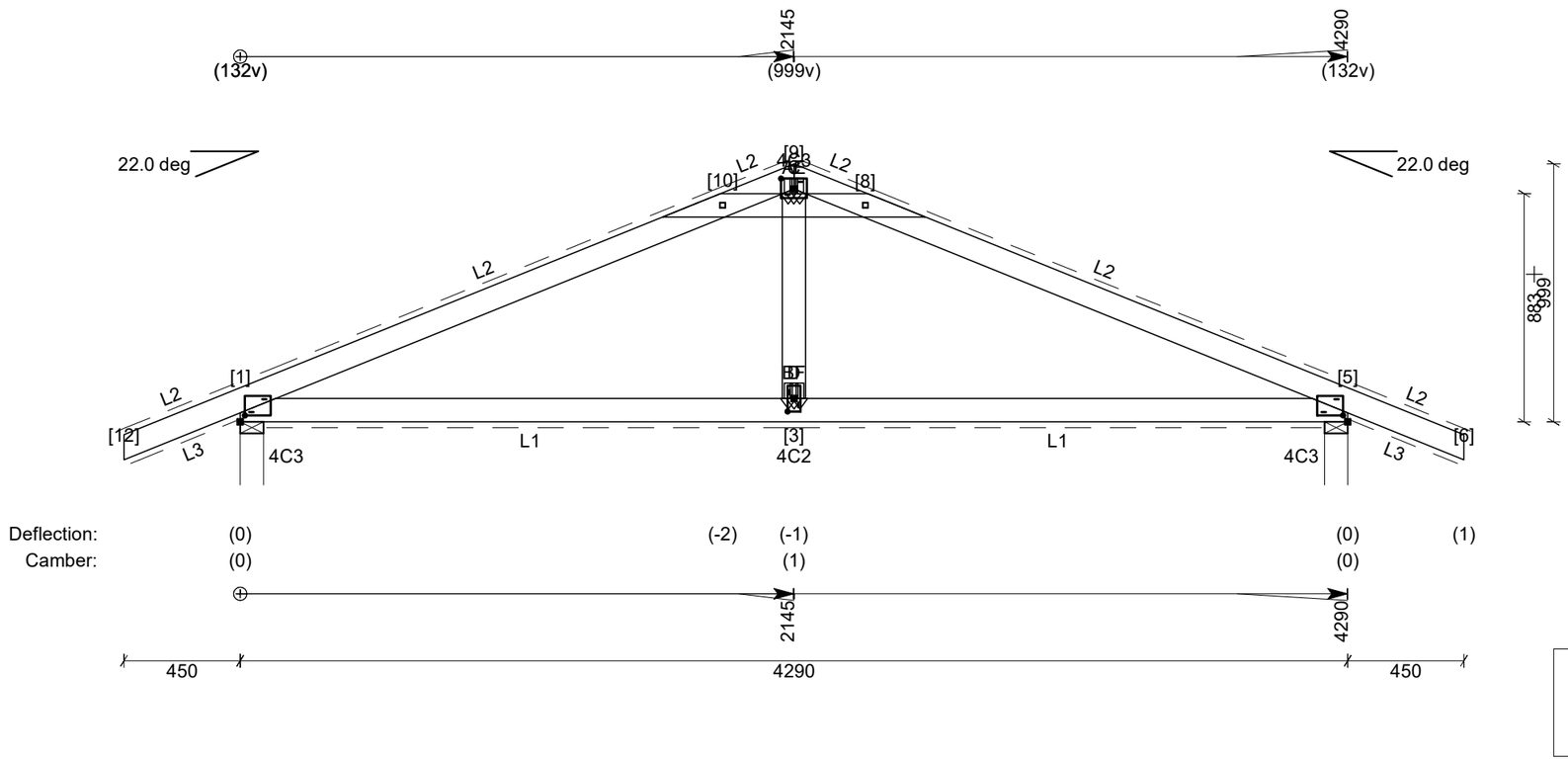

Side Symbol

Front	+
Back	○
Both	⊕

Linings

L1: 13mm Gib-board (8.5 kg/sq.m).
Battens @ 600mm.
L2: Pressed metal tiles (7.5 kg/sq.m).
Battens @ 900mm (Restraints @ 1800mm).
L3: Fibrecement (4.5mm) (7.7 kg/sq.m).
Battens @ 600mm.

Timber

Top Chords	1 / 90x45 MSG8 H12 uno
Bottom Chords	1 / 90x45 MSG8 H12 uno
Webs	1 / 90x45 MSG8 H12 uno

WP1 (8-10) 1 / 90x45 MSG8 H12

Supported trusses / Applied point loads

A: H1 (2123)	B: H1 (2123)
C: J1 (2145)	D: J1 (2145)
E: H1 (2168)	F: H1 (2168)

Note: numbers in brackets denote distance from left of truss.

Notes

1. Deflection = permanent load deflection including creep (negative = downward movement).
2. Overhang condition: Metal fascia.
3. Refer to Pryda Installation Guide for full bracing details.
4. Refer to layout for overall truss bracing.
5. Truss close to gable end: NO

Fixings

Waling plate (45mm thick) - Fix waling plate with:- 4 / 3.15 dia x 90 mach equivalent nails on each chord

Major supports and factored reactions

Joint	Type	Width	Perm.	Max. down (LC)	Uplift	Tie-down	Connector
1	Wall Ext	90	1.3 kN	2.8 kN (Gc+Qj)	-2.2 kN	1/NPPC4	-
5	Wall Ext	90	1.3 kN	2.8 kN (Gc+Qj)	-2.2 kN	1/NPPC4	-

Note: Refer to Truss Connections Report / Producer Statement for fixing details.

ABA20220988
APPROVED - Site Copy
Hastings District Council
20/09/2022

TRUSS DETAILS (DESIGN)

Job Ref: 7011Q

Truss Reference: M1 (Single Truss)

Truss type: Mono | No. plies : 1x45mm | Design spacing : 902mm | No. of : 4 | Building type: Residential

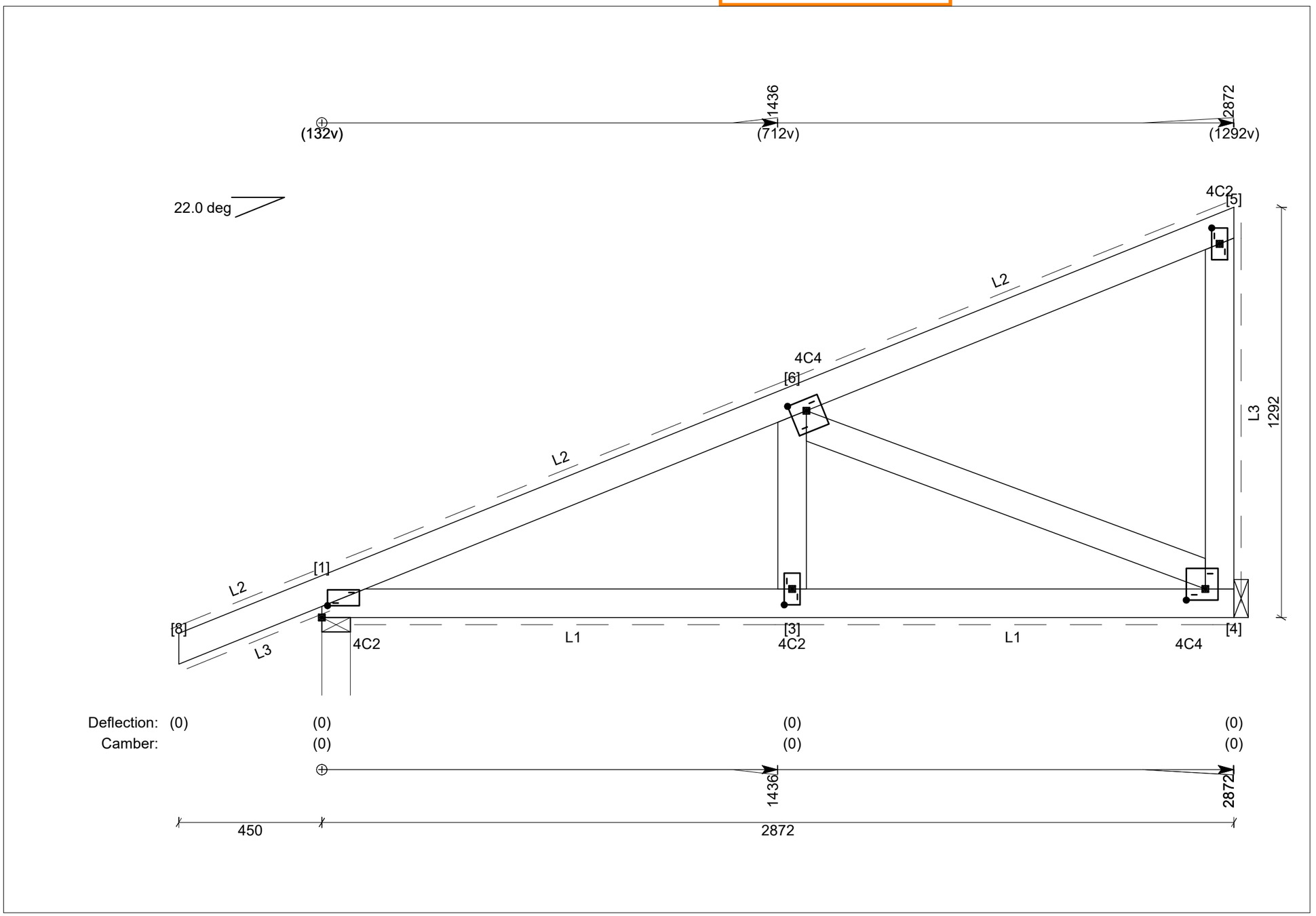

Linings

L1: 13mm Gib-board (8.5 kg/sq.m).
Battens @ 600mm.
L2: Pressed metal tiles (7.5 kg/sq.m).
Battens @ 900mm (Restraints @ 1800mm).
L3: Fibrecement (4.5mm) (7.7 kg/sq.m).
Battens @ 600mm.

Timber

Top Chords	1 / 90x45 MSG8 H12 uno
Bottom Chords	1 / 90x45 MSG8 H12 uno
Webs	1 / 90x45 MSG8 H12 uno

Notes

1. Deflection = permanent load deflection including creep (negative = downward movement).
2. Overhang condition: Metal fascia.
3. Refer to Pryda Installation Guide for full bracing details.
4. Refer to layout for overall truss bracing.
5. Truss close to gable end: YES

Major supports and factored reactions

Joint	Type	Width	Perm.	Max. down (LC)	Uplift	Tie-down	Connector
1	Wall Ext	90	0.7 kN	2.3 kN (Gc+Qj)	-1.3 kN	1/NPPC4	-
4	Truss Chord	45	0.5 kN	2.6 kN (Gc+Qj)	-1.4 kN	-	FB4590

Note: Refer to Truss Connections Report / Producer Statement for fixing details.

ABA20220988
APPROVED - Site Copy
Hastings District Council
20/09/2022

TRUSS DETAILS (DESIGN)

Job Ref: 7011Q

Truss Reference: M31 (Single Truss)

Truss type: Mono | No. plies : 1x45mm | Design spacing : 900mm | No. of : 1 | Building type: Residential

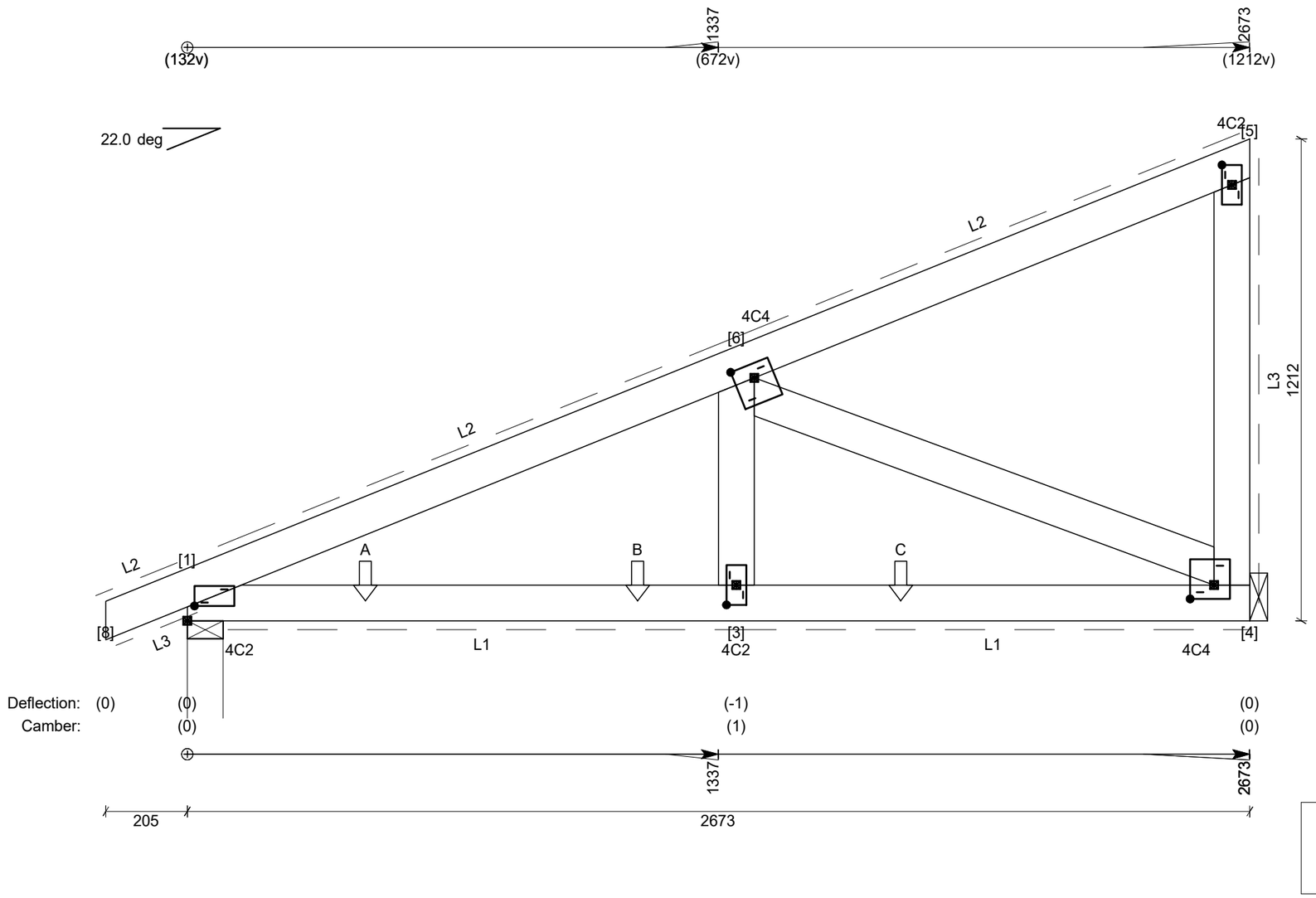

Linings

L1: 13mm Gib-board (8.5 kg/sq.m).
Battens @ 600mm.
L2: Pressed metal tiles (7.5 kg/sq.m).
Battens @ 900mm (Restraints @ 1800mm).
L3: Fibrecement (4.5mm) (7.7 kg/sq.m).
Battens @ 600mm.

Timber

Top Chords	1 / 90x45 MSG8 H12 uno
Bottom Chords	1 / 90x45 MSG8 H12 uno
Webs	1 / 90x45 MSG8 H12 uno

Supported trusses / Applied point loads

A: S2 (448) B: S2 (1133)
C: S8 (1795)
Note: numbers in brackets denote distance from left of truss.

Notes

1. Deflection = permanent load deflection including creep (negative = downward movement).
2. Overhang condition: Metal fascia.
3. Refer to Pryda Installation Guide for full bracing details.
4. Refer to layout for overall truss bracing.
5. Truss close to gable end: NO

Major supports and factored reactions

Joint	Type	Width	Perm.	Max. down (LC)	Uplift	Tie-down	Connector
1	Wall Ext	90	1.6 kN	3.0 kN (Gc+Qj)	-3.2 kN	1/NPPC4	-
4	Truss Chord	45	1.2 kN	2.7 kN (Gc+Qj)	-2.8 kN	-	MG

Note: Refer to Truss Connections Report / Producer Statement for fixing details.

Tumu Frame & Truss
Stortford Lodge, PO Box 2308, Hastings, , Ph (06) 879-7850, Fax (06) 879-6468

ABA20220988
APPROVED - Site Copy
Hastings District Council
20/09/2022

Date: 30-05-2022
Ver 4.5.5

Producer Statement - PS1 - Design

Job Ref: **7011Q**

This producer statement applies to the structural engineering design software "Pryda Build" supplied by Pryda NZ to

Tumu Frame & Truss

These truss designs are in accordance with sound and widely accepted engineering principles. I believe on reasonable grounds that if constructed in accordance with the design, the trusses will comply with relevant requirements of the New Zealand Building Code, Clause B1 and Verification Method B1/VM1. The durability shall comply with the New Zealand Building Code, Clause B2, for building importance level 2 and a design working life of 50 years.

In addition to the above, this software also complies in part with:

ANSI / TPI 1 - 2002 National Design Standard for metal plate connected wood truss construction.

AS 1649 - 2001 Timber - Methods of test for mechanical fasteners and connectors - Basic working loads and characteristic strengths.

The truss designs require that the supporting structure is stable in its own right, and that the trusses will be braced in accordance with the New Zealand Building Code Standard NZS 3604:2011, and any supplementary details provided, including but not limited to Pryda Installation Guides.

Pryda NZ holds a current policy of Professional Indemnity Insurance with cover no less than NZ$2 million. The policy includes the engineering design processes used in the software.

On behalf of Pryda NZ (a division of ITW New Zealand)



André van Blerk
Chartered Professional Engineer
BSc (Eng) CMEngNZ (214689), CPEng, IntPE

Sticks & stays stuck

ABA20220988
APPROVED - Site Copy
Hastings District Council
20/09/2022

3M All Weather Flashing Tape 8067















Features

- Sticks and stays stuck at -18°C without primers or staples.
- Adheres to damp surfaces.
- Aggressively sticks to most common building materials.
- Self seals around nails and staples *
- Thin film allows for multiple layers and won't affect window or cavity batten installation.
- Split liner for easy installation.
- No adhesive melting or staining in summer heat.
- Resists UV exposure for up to 3 months.
- BRANZ Appraised - No. 775 [2012]

** Horizontal surfaces that are nailed or stapled through require a second layer of flashing tape.*

Other applications

- Sealing joints to Rigid Air Barrier sheets
- Over flashing Metal & uPVC flashings, and penetrations to building underlays
- Over lapping to join is permitted. The lap must not be less than 50 mm.
- All substrates must be clean, dry and free from oils or other contaminants that could affect adhesion.

3M New Zealand Ltd
Industrial Adhesives and Tapes Division
94 Apollo Drive, Albany, Auckland, New Zealand
Phone: 0800 474 787, Fax: 0800 508 980
Email: 3mnzib1@mmm.com
www.3M.com/adhesives

BRANZ Appraised
Appraisal No. 775 [2012]

3M is a trademark of the 3M Company. © 3M 2011. All Rights Reserved. Please recycle.

Sticks and Stays Stuck. 3M All Weather Flashing Tape 8067

ABA20220988
APPROVED - Site Copy
Hastings District Council
20/09/2022

Internal corner gusset installation -

Cut a 152 mm long x 76 mm wide strip of 3M All Weather Flashing Tape 8067 for each of the bottom and top internal corners of the opening.
Fold in half lengthways and after removing the backing paper, install tight into the corner starting flush with the back of the opening.

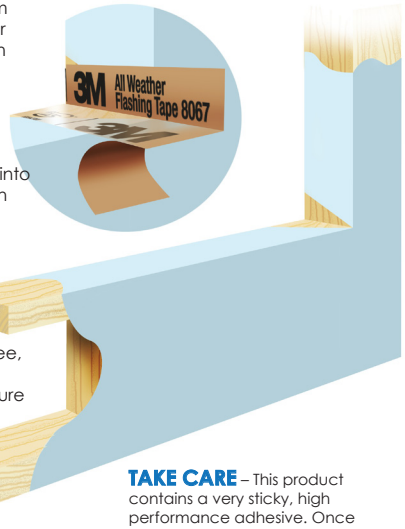

All Stages of installation

Use a roller, plastic squeegee, or similar to apply sufficient pressure to the tape to ensure adequate adhesion to the substrate.

TAKE CARE – This product contains a very sticky, high performance adhesive. Once stuck, it is difficult to remove.

1

- continued

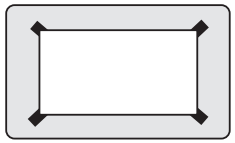

The overhanging section of gusset tape at the front of the opening is then pulled down over the outside face of the building underlay sealing the corner junction.

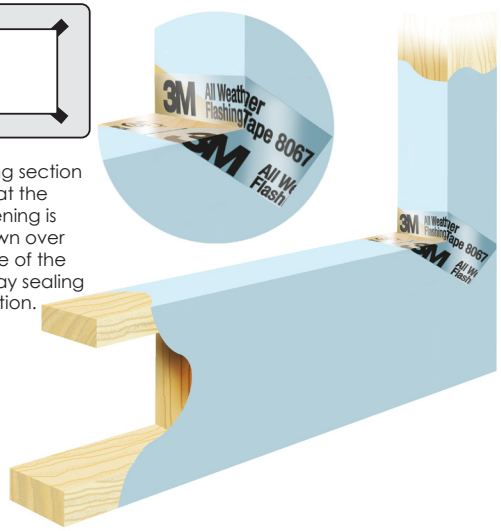

2

Sill Installation

Measure and cut a length of 3M All Weather Flashing Tape 8067 the full length of the sill. The tape is to be aligned flush with the interior face of the opening.
Once cut remove the widest portion of backing paper from the tape in sections as you apply along the horizontal surface being careful to keep the tape aligned to the inside edge of the sill.
Once completed remove the narrowest section of backing film and fold down onto the outside face of the building underlay.

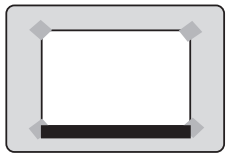

3

Sill trimmer - nail sealability

Horizontal surfaces with penetrations only

Apply a layer of 76 mm wide 3M All Weather Flashing Tape 8067, over the top of the original flashing tape, along the entire length of the sill. Align the tape to the outside face of the framing line. This is a mandatory requirement (BRANZ 775-2012) for horizontal surfaces where water may pool, to ensure nail penetrations self seal.



4

Jamb / Sill Installation

Measure vertically up the jamb from the internal corner of the sill allowing minimum 50 mm cover onto the building underlay. Using this measurement cut a section of 3M All Weather Flashing Tape 8067.
Remove the backing paper
and apply.

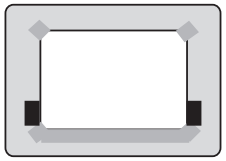

Trade Tip

Flashing tape must extend 50 mm from the exposed timber onto the building underlay

5

Jamb / Head Installation

Measure vertically down the jamb allowing minimum 50 mm cover onto the building underlay. Repeat for the head trimmer.
….Remove the backing paper and apply.

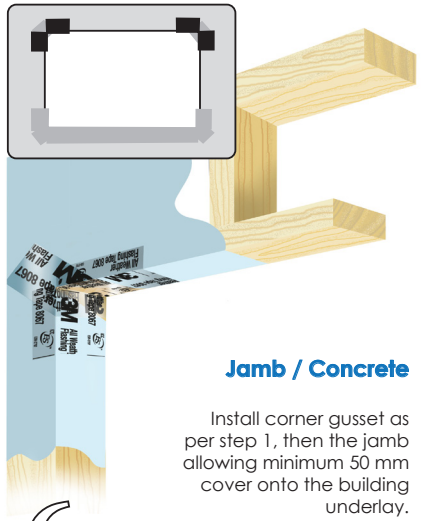

Jamb / Concrete

Install corner gusset as per step 1, then the jamb allowing minimum 50 mm cover onto the building underlay.

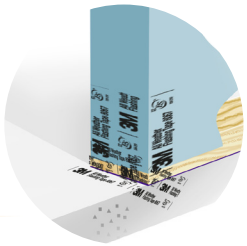

6

TECHNICAL SPECIFICATIONS

ABA20220988
APPROVED - Site Copy
Hastings District Council
20/09/2023

Thermakraft ALUBAND™ ***Window Sealing System*** can be used as a flexible flashing system around window and door joinery openings on timber framed buildings within the following scope:

- the scope limitations of NZBC Acceptable Solution E2/AS1, Paragraph 1.1; and,
- with a risk score of 0-20, calculated in accordance with NZBC Acceptable Solution E2/AS1, Table 2; and,
- with wall cladding systems complying with NZBC Acceptable Solution E2/AS1; and,
- with wall underlays compatible with the flashing tape; and,
- situated in NZS 3604 Building Wind Zones up to, and including "Very High".

Thermakraft ALUBAND™ can be used as a flexible flashing system around window and door joinery openings on steel framed buildings within the following scope:

- the scope limitations of NZBC Acceptable Solution E2/AS1; and,
- constructed with steel framing complying with the NZBC; and
- with a risk score of 0-20, calculated in accordance with NZBC Acceptable Solution E2/AS1, Table 2; and with wall cladding systems complying with NZBC Acceptable Solution E2/AS1; and,
- with wall underlays compatible with the flashing tape; and,
- situated in NZS 3604 Building Wind Zones up to, and including "Very High".

Thermakraft ALUBAND™ meets the Performance Requirements of NZBC Clauses B2, Durability (B2.3.1[b] 15 years and B2.3.2), E2 External Moisture, and F2 Hazardous Building Materials.

Thermakraft ALUBAND™ is expected to have a serviceable life equal to that of the cladding, when installed in accordance with this "Application and Installation" sheet, provided it is not exposed to the weather or ultra-violet (UV) for a total of no more than 90 days, or damaged on installation.

Thermakraft ALUBAND™ is designed to work on all kraft based building underlays that meet the requirements of NZBC E2/AS1 Table 23, and on all **Thermakraft** BRANZ appraised wall underlays.

Thermakraft ALUBAND™ should be installed when temperatures are above +10°C - +30°C.
At temperatures below 10°C, the following cold weather installation may be required:-

1. Follow application and installation steps 1-3.
2. At step 4 remove the polyethylene release film from the ALUBAND™ tape. Align the back edge of the ALUBAND™ with the inside of the sill, and press into place.
3. **USING A HEAT GUN SET ON LOW**, **APPLY HEAT** to the top of the ALUBAND™ tape (logo facing up). The ALUBAND™ adhesive will soften. Ensure during heating that the ALUBAND™ surface is not damaged or melted.
   NOTE: Take care not to apply excess heat, as this may melt or damage the wall underlay.
4. Whilst the ALUBAND™ is warm to touch, and using the **Thermakraft Aluband Tool**, firmly press the ALUBAND™ onto the wall underlay to ensure good adhesion. Using the **Thermakraft Aluband Tool**, ensure the tape is fitted tightly into the jamb to sill corners.

Thermakraft ALUBAND™ must not be left exposed to the elements for more than 90 days.

The recommendations contained in **Thermakraft's** literature are based on good building practice, but are not an exhaustive statement of all relevant information and are subject to any conditions contained in the Warranty. All product dimensions and performance claims are subject to any variation caused by normal manufacturing process and tolerances. Furthermore, as the successful performance of the relevant system depends on numerous factors outside the control of **Thermakraft** (for example quality of workmanship and design), **Thermakraft** shall not be liable for the recommendations in that literature and the performance of **the Product**, including its suitability for any purpose or ability to satisfy the relevant provisions of the Building Code, regulations and standards.

Thermakraft
Industries (NZ) Ltd

11 Turin Place, East Tamaki, Auckland, New Zealand
PO Box 58-112, Botany, Manukau 2163, New Zealand
Phone: 09-273 3727 Fax: 09-273 3726 Free Phone: 0800 806 595
Email: sales@thermakraft.co.nz Website: www.thermakraft.co.nz

ABA20220988
APPROVED - Site Copy
Hastings District Council
20/09/2022

BRANZ Appraised
Appraisal No. 238 [2018]

PINK® BATTS® INSULATION



Appraisal No. 238 (2018)

This Appraisal replaces BRANZ Appraisal No. 238 (2012).

Amended 26 November 2018.

BRANZ Appraisals

Technical Assessments of products for building and construction.

Tasman Insulation New Zealand Ltd
PO Box 12 069
Penrose
Auckland
Tel: 09 579 2139
Fax: 09 571 3482
Freephone: 0800 746 522
Web: www.pinkbatts.co.nz

BRANZ
1222 Moonshine Rd,
RD1, Porirua 5381
Private Bag 50 908
Porirua 5240,
New Zealand
Tel: 04 237 1170
branz.co.nz

Product

1.1 Pink® Batts® Insulation is a range of resin bonded fibrous glasswool thermal insulating material for use in walls, ceilings and roofs of buildings. Pink® Batts® Insulation is pre-cut to suit a range of framing spacings.

Scope

2.1 Pink® Batts® Insulation has been appraised as a thermal insulation material for framed or part-framed walls, ceilings and roofs of domestic and commercial buildings.

Building Regulations

New Zealand Building Code (NZBC)

3.1 **In the opinion of BRANZ, Pink® Batts® Insulation, if designed, used, installed and maintained in accordance with the statements and conditions of this Appraisal, will meet or contribute to meeting the following provisions of the NZBC:**

Clause B2 DURABILITY: Performance B2.3.1 (a) not less than 50 years and B2.3.1 (b) 15 years. Pink® Batts® Insulation meets these requirements. See Paragraph 8.1.

Clause E3 INTERNAL MOISTURE: Performance E3.3.1. Pink® Batts® Insulation will contribute to meeting this requirement. See Paragraphs 13.1 and 13.2.

Clause F2 HAZARDOUS BUILDING MATERIALS: Performance F2.3.1. Pink® Batts® Insulation meets this requirement and will not present a health hazard to people.

Clause H1 ENERGY EFFICIENCY: Performance H1.3.1 (a) and H1.3.2 E. Pink® Batts® Insulation will contribute to meeting these requirements. See Paragraphs 14.1 and 14.2.

Readers are advised to check the validity of this Appraisal by referring to the Valid Appraisals listing on the BRANZ website, or by contacting BRANZ.

ABA20220988
APPROVED - Site Copy
Hastings District Council
20/09/2022

Technical Specification

4.1 Pink® Batts® Insulation is a resin bonded fibrous glasswool insulation manufactured from recycled and/or virgin glass and cured urea extended phenolic resin.

4.2 Pink® Batts® Insulation is manufactured in a range of sizes to suit framing centres and cavity depths. Building Insulation Blanket (BIB) is supplied in rolls for commercial applications. Pink® Batts® Insulation is available as set out in Table 1.

Table 1: Pink® Batts® Insulation product table.

R-value	Length (mm)	Width (mm)	Nominal Thickness (mm)	Nominal Total Area (m^2)	Density (kg/m^3)
Roof - Thermal Insulation					
1.8[1]	1220	432	95	13.7	8.3
2.2[1]	1220	432	115	12.6	8.2
2.6[1]	1220	432	140	10.5	7.7
3.2[1]	1220	432	170	8.4	8.4
3.2[1]	1220	432	170	8.4	6.9
3.6[1]	1220	432	180	7.4	7.4
3.6	1220	432	180	7.4	8.8
4.0[1]	1220	432	195	6.3	8.1
5.0[1]	1220	432	220	4.2	10.0
6.0[1]	1220	432	235	3.7	13.0
6.3[1]	1220	432	250	3.2	12.3
7.0[1]	1220	432	260	2.6	15.8
Roof - Building Insulation Blanket					
1.2	12,000	1200	50	28.8	12.0
1.8	8000	1200	75	19.2	12.0
2.2	8000	1200	100	19.2	9.1
2.4	8000	1200	100	19.2	11.5
2.6	6000	1200	110	14.4	11.0
3.2	8000	1200	135	9.6	10.9
Roof - Pink® Batts® Retrofit Insulation					
2.9[1]	1220	432	150	9.5	7.7
3.3[1]	1220	432	175	8.4	7.1
Wall - Masonry Insulation					
1.0[1]	1220	580	40	21.2	14.0
1.2	1220	580	50	17.0	12.8
70 mm Wall Range - Thermal Insulation					
2.2	1140	560	70	6.4	30.0
90 mm Wall Range - Thermal Insulation					
1.8[1]	1140	560	90	16.6	9.0
2.2[1]	1140	560	90	13.4	11.6
2.4[1]	1140	560	90	10.2	14.7
2.4[1]	1140	560	90	10.2	17.4
2.6[1]	1140	560	90	9.6	19.4
2.8[1]	1140	560	90	6.4	27.1

Readers are advised to check the validity of this Appraisal by referring to the Valid Appraisals listing on the BRANZ website, or by contacting BRANZ.

ABA20220988
APPROVED - Site Copy
Hastings District Council
20/09/2022

Table 1: Pink® Batts® Insulation product table cont.

R-value	Length (mm)	Width (mm)	Nominal Thickness (mm)	Nett Area (m²)	Density (kg/m³)
90 mm Narrow Wall Range - Thermal Insulation					
2.2[1]	1140	360	90	9.0	11.8
2.6[1]	1140	360	90	7.4	19.4
2.8[1]	1140	360	90	4.5	27.1
90 mm Steel Wall Range - Thermal Insulation					
2.2[1]	1220	610	90	15.6	11.8
2.6[1]	1220	610	90	9.7	19.4
140 mm Wall Range - Thermal Insulation					
3.2[1]	1140	560	140	9.6	9.6
3.6[1]	1140	560	140	7.0	14.0
4.0[1]	1140	560	140	5.1	19.5
140 mm Narrow Wall Range - Thermal Insulation					
3.2[1]	1140	360	140	7.0	9.6
4.0[1]	1140	360	140	4.1	19.5

[1] Pink® Batts® Insulation products that have the Environmental Choice license.

4.3 Pink® Batts® Insulation is pink in colour and is baled in polythene bags with labelling in compliance with AS/NZS 4859.1.

4.4 Pink® Batts® Retrofit Ceiling Insulation is pink in colour and is baled in teal polythene bags with labelling in compliance with AS/NZS 4859.1.

4.5 Accessories used with Pink® Batts® Insulation, which are supplied by the insulation installer, are wire netting, plastic strapping and fixings.

Handling and Storage

5.1 Pink® Batts® Insulation must be stored under cover and in dry conditions. Heavy objects must not be stacked on the bales. The bales must be stored in an orientation that avoids excessive compression of the product.

5.2 In general, insulation products are sensitive to the length of time they are stored under compression packaging. Product that does not recover to its nominal thickness may not achieve the stated R-value.

Technical Literature

6.1 Refer to the Appraisal listing on the BRANZ website for details of the current Technical Literature for Pink® Batts® Insulation. The Technical Literature must be read in conjunction with this Appraisal. All aspects of design, use, installation and maintenance contained in the Technical Literature and within the scope of this Appraisal must be followed.

Design Information

General

7.1 Pink® Batts® Insulation is intended for use as thermal insulation to meet the requirements of the NZBC. Pink® Batts® Insulation can be used to meet the minimum schedule method R-values of NZBC Verification Method H1/VM1 or NZBC Acceptable Solution H1/AS1. Greater construction R-values can be achieved where specific design is used. For construction R-values refer to the BRANZ House Insulation Guide. Product R-values and dimensions are given in Table 1.

Readers are advised to check the validity of this Appraisal by referring to the Valid Appraisals listing on the BRANZ website, or by contacting BRANZ.

ABA20220988
APPROVED - Site Copy
Hastings District Council
20/09/2022

7.2 Pink® Batts® Insulation thermal resistance (R-value) has been determined by testing to AS/NZS 4859.1, which is an acceptable method in NZBC Acceptable Solution H1/AS1.

7.3 Pink® Batts® Insulation is designed to be friction-fitted between wall, ceiling or roof framing. They can also be laid directly on a ceiling lining, over ceiling battens or joists/truss chords. In other horizontal situations, the insulation must be adequately supported by galvanised wire netting or some other suitable durable material.

7.4 Where the insulation is installed in exterior walls, the insulation material nominal thickness must be selected to provide a snug close fit which touches all sides of the insulation cavity between the wall underlay and the interior wall lining.

7.5 Where the insulation is retrofitted in external walls without a wall underlay, and with direct-fixed claddings, the insulation must be at least 20 mm thinner than the framing to allow a gap of at least 20 mm between the insulation and the wall cladding. Horizontal straps must be stapled into the sides of the wall studs at 300 mm centres maximum as support before the insulation is installed. Refer also to NZS 4246, Section 5.4.2.

7.6 When the insulation is installed in a wall with a drained cavity, it is recommended that specific wall products with a controlled nominal thickness be used. Where the stud spacings are greater than 450 mm, an intermediate means of restraining the insulation from bulging into the cavity must be installed in accordance with NZBC Acceptable Solution E2/AS1, Paragraph 9.1.8.5.

7.7 Building Insulation Blanket is designed specifically for commercial roof and commercial wall applications. In residential applications, installation must be completed in line with NZS 4246.

7.8 To prevent moisture transfer and to provide roof ventilation, a separation of 25 mm minimum is required between the insulation and any rigid substrate or flexible roof underlay. Selecting specifically designed skillion roof insulation products with a controlled nominal thickness can assist with this requirement.

7.9 The building envelope must be constructed to ensure the insulation remains dry during installation and throughout the life of the building.

7.10 The clearance requirements for heating appliances and downlights must be met and reference made to the manufacturer's instructions and NZS 4246. See Paragraphs 10.1 - 10.3.

Durability

Serviceable Life

8.1 Where the building is maintained so that provisions of NZBC Clauses E2 and E3 are met, and where the insulation is not crushed or exposed to conditions that will diminish its thermal performance (e.g. moisture), Pink® Batts® Insulation can be expected to have a serviceable life of at least 50 years.

Maintenance

9.1 Insulation that has become damp must be removed and the cause of dampness repaired. Cavities must be clean and dry before fitting new insulation of an equivalent thermal rating. NZS 4246 gives guidance on thermal insulation maintenance due to water damage.

Prevention of Fire Occurring

10.1 Pink® Batts® Insulation is considered a non-combustible material and need not to be separated from heat sources such as fire places, heating appliances, flues and chimneys. However, when used in conjunction with, or attached to heat sensitive materials, the heat sensitive material must be separated from fireplaces, heating appliances, flues and chimneys in accordance with the requirements of Part 7 of NZBC Acceptable Solutions C/AS1 to C/AS6 and NZBC Verification Method C/VM1.

Readers are advised to check the validity of this Appraisal by referring to the Valid Appraisals listing on the BRANZ website, or by contacting BRANZ.

ABA20220988
APPROVED - Site Copy
Hastings District Council
20/09/2022

Downlights

10.2 Recessed luminaires shall be of type and be installed in accordance with NZBC Acceptable Solution C/AS1 to C/AS6, Section 7.4.

10.3 Insulation materials must maintain a clearance of 100 mm to undefined recessed luminaires in existing buildings.

Control of Internal Fire and Smoke Spread

11.1 Pink® Batts® Insulation has been classified non-combustible when tested to AS 1530.1 and can therefore be assigned a Group Number of 1-S. Unless foamed plastics building materials are also used as part of the wall or ceiling construction, there are no internal surface finish requirements in Risk Group SH in accordance with NZBC Acceptable Solution C/AS1, Paragraph 4.2. When used in an occupied space, Pink® Batts® Insulation does not need to be enclosed in any Risk Group. Refer to NZBC Acceptable Solutions C/AS2 to C/AS6 for the specific internal surface requirements for walls or ceilings in other Risk Groups.

External Moisture

12.1 The total building envelope must be weathertight and comply with the requirements of NZBC Clause E2 to ensure that the insulation remains dry in use.

12.2 The moisture content of the construction materials at the time of installing and enclosing the insulation must meet the requirements of NZBC Acceptable Solution E2/AS1, Paragraph 10.2 (a), or a lower moisture content if required by the lining manufacturer.

Internal Moisture

13.1 Buildings must provide an adequate combination of thermal resistance, ventilation and space temperature to all habitable spaces, bathrooms, laundries and other spaces where moisture may be generated or may accumulate. This does not apply to Communal Non-residential, Commercial, Industrial, Outbuildings or Ancillary buildings.

13.2 Roofs and walls of housing complying with the Schedule Method for Compliance with Clause H1.3.2 E will have adequate thermal resistance. Other buildings may require more thermal insulation to satisfy the requirements of NZBC Acceptable Solution E3/AS1 than that to satisfy the energy efficiency provisions alone.

Energy Efficiency

14.1 Pink® Batts® Insulation will contribute to meeting the requirements of NZBC Clause H1, Performance H1.3.1 (a) and H1.3.2 E by compliance with NZBC Verification Method H1/VM1 or NZBC Acceptable Solution H1/AS1. Refer to Paragraphs 7.1 - 7.8.

14.2 Pink® Batts® Insulation R-values have been determined by BRANZ testing to AS/NZS 4859.1 and are given in Table 1.

Installation Information

Installation Skill Level Requirements

15.1 Installation of Pink® Batts® Insulation must be completed by an installer with an understanding of insulation installation.

General

16.1 Installation of Pink® Batts® Insulation must be in accordance with the Technical Literature, Installation Instructions and this Appraisal. NZS 4246 should be used as a guide for installing insulation in residential buildings.

16.2 The product must be installed only when the building is enclosed and when the construction materials have achieved the required maximum moisture content or less.

16.3 Pink® Batts® Insulation must be released from the packaging and allowed to re-loft prior to installation. The time to loft will depend upon the length of time the product has been packaged and stored.

Readers are advised to check the validity of this Appraisal by referring to the Valid Appraisals listing on the BRANZ website, or by contacting BRANZ.

ABA20220988
APPROVED - Site Copy
Hastings District Council
20/09/2022

16.4 Pink® Batts® Insulation is supplied in segment and blanket form (see Table 1) to suit framing layouts. The product is able to be cut to suit wall cavities and when fitted between roof or ceiling framing. The insulation must be neatly friction-fitted between framing members so that the potential for gaps and convective heat loss is reduced. In wall cavities the insulation must be neatly friction-fitted between framing members to prevent sagging. In ceiling or roofs, the insulation may be fitted between framing members or fitted over framing members and butted tightly. The insulation must extend to the external wall top plate. The insulation must not be folded or compressed. A close even fit provides the most efficient thermal performance. Whenever possible, the insulation should be fitted beneath wiring or plumbing.

16.5 The clearance requirements for heating appliances and downlights must be followed. Refer also to NZS 4246.

Inspections

16.6 The Technical Literature, this Appraisal and NZS 4246 must be referred to during the inspection of Pink® Batts® Insulation installations.

Health and Safety

17.1 Refer to the Technical Literature and NZS 4246 for guidance on health and safety requirements such as personal protective clothing and installation hazard assessment.

Basis of Appraisal

The following is a summary of the technical investigations carried out:

Tests

18.1 BRANZ has carried out thermal resistance testing of Pink® Batts® Insulation in accordance with AS/NZS 4859.1.

18.2 Tests have been carried out in accordance with AS 1530.1. Pink® Batts® Insulation is not deemed combustible according to the test criteria. The results have been reviewed by BRANZ technical experts.

Other Investigations

19.1 An assessment of the durability of Pink® Batts® Insulation has been made by BRANZ technical experts.

19.2 The manufacturer's Technical Literature including installation instructions have been reviewed by BRANZ and found to be satisfactory.

Quality

20.1 The manufacture of Pink® Batts® Insulation has been examined by BRANZ, including methods adopted for quality control. Details of the manufacturing processes, and quality and composition of the raw materials used were obtained and found to be satisfactory.

20.2 The range of Pink® Batts® Insulation products have been assessed for their environmental impact by the New Zealand Ecolabelling Trust and comply with the requirements of the Environmental Choice Specification, Licence No. 2504017 - Thermal (resistive type) Building Insulants. The products that have the Environmental Choice license are noted in Table 1.

20.3 Tasman Insulation New Zealand Ltd is responsible for the quality of the product supplied.

20.4 Quality of installation of the product on site is the responsibility of the installer.

20.5 Quality of maintenance of the building to ensure the insulation material remains dry is the responsibility of the building owner.

Readers are advised to check the validity of this Appraisal by referring to the Valid Appraisals listing on the BRANZ website, or by contacting BRANZ.

ABA20220988
APPROVED - Site Copy
Hastings District Council
20/09/2022

Sources of Information

- AS 1530.1: 1994 Combustibility test for materials.
- AS/NZS 4859.1: 2002 Materials for the thermal insulation of buildings.
- NZS 4246: 2016 Energy efficiency - Installing bulk thermal insulation in residential buildings.
- BRANZ Bulletin Number 525 Preventing moisture problems in timber-framed skillion roofs.
- BRANZ House Insulation Guide, Fifth Edition 2014.
- Acceptable Solution and Verification Methods for New Zealand Building Code Energy Efficiency Clause H1, Ministry of Business, Innovation and Employment, Fourth Edition, (including Amendment 3, 1 January 2017).
- Ministry of Business, Innovation and Employment record of Amendments - Acceptable Solutions, Verification Methods and Handbooks.
- The Building Regulations 1992.

Amendments

Amendment No. 1, dated 05 September 2018.

This Appraisal has been amended to include the use of Pink® Batts® Insulation when retrofitting external walls without wall underlay with direct-fixed claddings.

Amendment No. 2, dated 26 November 2018.

This Appraisal has been amended to update Table 1 to include the Roof - Building Insulation Blanket product range.

Readers are advised to check the validity of this Appraisal by referring to the Valid Appraisals listing on the BRANZ website, or by contacting BRANZ.

ABA20220988
APPROVED - Site Copy
Hastings District Council
20/09/2022

In the opinion of BRANZ, Pink® Batts® Insulation is fit for purpose and will comply with the Building Code to the extent specified in this Appraisal provided it is used, designed, installed and maintained as set out in this Appraisal.

The Appraisal is issued only to Tasman Insulation New Zealand Ltd, and is valid until further notice, subject to the Conditions of Appraisal.

Conditions of Appraisal

1. This Appraisal:
   a) relates only to the product as described herein;
   b) must be read, considered and used in full together with the Technical Literature;
   c) does not address any Legislation, Regulations, Codes or Standards, not specifically named herein;
   d) is copyright of BRANZ.
2. Tasman Insulation New Zealand Ltd:
   a) continues to have the product reviewed by BRANZ;
   b) shall notify BRANZ of any changes in product specification or quality assurance measures prior to the product being marketed;
   c) abides by the BRANZ Appraisals Services Terms and Conditions;
   d) warrants that the product and the manufacturing process for the product are maintained at or above the standards, levels and quality assessed and found satisfactory by BRANZ pursuant to BRANZ's Appraisal of the product.
3. BRANZ makes no representation or warranty as to:
   a) the nature of individual examples of, batches of, or individual installations of the product, including methods and workmanship;
   b) the presence or absence of any patent or similar rights subsisting in the product or any other product;
   c) any guarantee or warranty offered by Tasman Insulation New Zealand Ltd.
4. Any reference in this Appraisal to any other publication shall be read as a reference to the version of the publication specified in this Appraisal.
5. BRANZ provides no certification, guarantee, indemnity or warranty, to Tasman Insulation New Zealand Ltd or any third party.

For BRANZ

Chelydra Percy
Chief Executive

Date of Issue:
03 August 2018

Readers are advised to check the validity of this Appraisal by referring to the Valid Appraisals listing on the BRANZ website, or by contacting BRANZ.

ABA20220988
APPROVED - Site Copy
Hastings District Council
20/09/2022

BRANZ Appraised
Appraisal No. 611 [2020]

JAMES HARDIE RIGID AIR BARRIERS



Appraisal No. 611 (2020)

This Appraisal replaces BRANZ Appraisal No. 611 (2011)

Amended 07 December 2020

BRANZ Appraisals

Technical Assessments of products for building and construction.

James Hardie New Zealand Limited
PO Box 12 070
Penrose
Auckland
Tel: 0800 808 868
Web: www.jameshardie.co.nz

BRANZ
1222 Moonshine Rd,
RD1, Porirua 5381
Private Bag 50 908
Porirua 5240,
New Zealand
Tel: 04 237 1170
branz.co.nz

Product

1.1 James Hardie Rigid Air Barriers are a range of rigid wall underlay materials including RAB™ Board and HomeRAB™ Pre-Cladding. They are sealed fibre cement sheets designed for use as rigid wall underlay behind wall cladding systems. HomeRAB™ Pre-Cladding and RAB™ Board are manufactured using a medium density fibre cement formulation.

Scope

2.1 HomeRAB™ Pre-Cladding has been appraised for use as a rigid wall underlay and temporary weather-protecting sheathing on timber-framed buildings within the following scope:

- the scope limitations of NZBC Acceptable Solution E2/AS1, Paragraph 1.1 with regards to building height and floor plan area; and,
- with absorbent wall claddings directly fixed to framing; and,
- with non-absorbent wall claddings directly fixed to framing with a flexible wall underlay over the HomeRAB™ Pre-Cladding; and,
- with absorbent and non-absorbent wall claddings installed over a nominal 20 mm drained cavity; and,
- with masonry veneer in accordance with NZBC Acceptable Solution E2/AS1; and,
- situated in NZS 3604 Wind Zones up to, and including, Very High.

2.2 RAB™ Board has been appraised for use as a rigid wall underlay and temporary weather-protecting sheathing on timber-framed buildings within the following scope:

- the scope limitations of NZBC Acceptable Solution E2/AS1, Paragraph 1.1 with regards to building height and floor plan area; and,
- constructed with timber framing, or timber frame infill complying with the NZBC; and,
- with absorbent wall claddings directly fixed to framing; and,
- with non-absorbent wall claddings directly fixed to framing with a flexible wall underlay over the RAB™ Board; and,
- with absorbent and non-absorbent wall claddings installed over an nominal 20 mm drained cavity; and,
- with masonry veneer in accordance with NZBC Acceptable Solution E2/AS1; and,
- when used in conjunction with wall cladding systems suitable for use with maximum wind pressures for structural and weathertightness design of 1 kPa Serviceability Limit State (SLS) and 1.5 kPa Ultimate Limit State (ULS) where studs are at maximum 600 mm centres, and 3 kPa SLS and 4.5 kPa ULS where studs are at maximum 400 mm centres.

(Note: James Hardie Rigid Air Barriers can be used to provide structural bracing. RAB™ Board can also be used in fire resistance rated construction. These aspects have not been assessed by this Appraisal and are outside its scope.)

Readers are advised to check the validity of this Appraisal by referring to the Valid Appraisals listing on the BRANZ website, or by contacting BRANZ.

ABA20220988
APPROVED - Site Copy
Hastings District Council
20/09/2022

2.3 RAB™ Board has also been appraised for use as a rigid wall underlay and temporary weather-protecting sheathing on timber-framed buildings within the following scope:

- buildings with a building height not exceeding 25 m; and,
- constructed with timber framing complying with the NZBC; and,
- with inter-storey deflections designed for up to height/180 of horizontal in-plane movement during seismic SLS events (based on a 3 m inter-storey height); and,
- with absorbent and non-absorbent wall claddings installed over a nominal 20 mm drained cavity; and,
- when used in conjunction with either James Hardie or other cladding systems suitable for use with maximum wind pressures for structural and weathertightness design of 1 kPa SLS and 1.5 kPa ULS where studs are at maximum 600 mm centres, and 3 kPa SLS and 4.5 kPa ULS where studs are at maximum 400 mm centres.

Building Regulations

New Zealand Building Code (NZBC)

3.1 **In the opinion of BRANZ, James Hardie Rigid Air Barriers, if used, designed, installed and maintained in accordance with the statements and conditions of this Appraisal, will meet, or contribute to meeting the following provisions of the NZBC:**

Clause B1 STRUCTURE: Performance B1.3.1, B1.3.2 and B1.3.4. James Hardie Rigid Air Barriers meet the requirements for loads arising from earthquake and wind [i.e. B1.3.3 (f) and (h)]. See Paragraphs 8.1-8.7.

Clause B2 DURABILITY: Performance B2.3.1 (a), not less than 50 years, B2.3.1 (b), 15 years and B2.3.2. James Hardie Rigid Air Barriers meet these requirements. See Paragraphs 9.1-9.3.

Clause C3 FIRE AFFECTING AREAS BEYOND THE SOURCE: Performance C3.5 and C3.7. When used as part of an external wall system, James Hardie Rigid Air Barriers will contribute to meeting these requirements. See Paragraphs 12.1-12.3.

Clause E2 EXTERNAL MOISTURE: Performance E2.3.2. When used as part of the cladding system, James Hardie Rigid Air Barriers will contribute to meeting this requirement. See Paragraphs 13.1-13.3.

Clause F2 HAZARDOUS BUILDING MATERIALS: Performance F2.3.1. James Hardie Rigid Air Barriers meet this requirement.

Technical Specification

4.1 System components and accessories for James Hardie Rigid Air Barriers, which are supplied by James Hardie New Zealand Limited are:

- **HomeRAB™ Pre-Cladding** is a 4.5 mm thick fibre cement sheet, manufactured from a cellulose fibre cement formulation. It is produced in sheet material form with 'HomeRAB' printed on the front face. The sheets are formed, cut to length, and then cured by high pressure autoclaving. The sheet is coated on the front face and four edges with a green tinted water repellent sealer. HomeRAB™ Pre-Cladding is available in sizes of 1,200 mm wide and 2,450, 2,750 and 3,000 mm long. It is manufactured to conform to the requirements of AS/NZS 2908.2.
- **RAB™ Board** are 6 mm or 9 mm thick fibre cement sheets, manufactured from a cellulose fibre cement formulation. It is produced in sheet material form. The sheets are formed, cut to length, and then cured by high pressure autoclaving. The sheet is coated on the front face and four edges with a green tinted water repellent sealer. RAB™ Board is available in sizes of 1,200 mm wide and 2,450, 2,750 and 3,000 mm long. It is manufactured to conform to the requirements of AS/NZS 2908.2 and is classified as a Type A, Category 2 fibre cement product.

Readers are advised to check the validity of this Appraisal by referring to the Valid Appraisals listing on the BRANZ website, or by contacting BRANZ.

ABA20220988
APPROVED - Site Copy
Hastings District Council
20/09/2022

Accessories

- **HomeRAB™ Pre-Cladding and RAB™ Board horizontal flashings** - uPVC, available in 3,000 mm lengths.

4.2 System components and accessories for James Hardie Rigid Air Barriers, which are supplied by the building contractor are:

- **Joint sealing tape and flexible sill and jamb flashing tape system** - 3M™ All Weather Flashing Tape 8067 (3M New Zealand Ltd), SUPER-STICK Flexible Flashing Tape (Marshall Innovations Ltd), Thermakraft Premium Jointing Tape (Thermakraft NZ Ltd) and Thermaflash (Thermakraft NZ Ltd).
- **HomeRAB™ Pre-Cladding and RAB™ Board 6 mm sheet fixing** – gun-driven 40 mm or 50 x 2.8 mm hot-dip galvanised or ring shank stainless steel round head nails, or hand-driven 40 x 2.8 mm hot-dip galvanised or ring shank stainless steel HardieFlex™ nails.
- **RAB™ Board 9 mm sheet fixing** – 50 x 2.8 mm hot-dip galvanised or stainless steel round drive nails.

(Note: Hot-dip galvanising must comply with AS/NZS 4680 and stainless steel must be Grade 304 or 316.)

- **Horizontal Z Flashing** - uPVC, galvanised steel or aluminium.

Handling and Storage

5.1 Handling and storage of all materials supplied by James Hardie New Zealand Limited or the building contractor, whether on-site or off-site, is under the control of the building contractor. James Hardie Rigid Air Barriers must be stacked flat, off the ground and supported on a level platform. They must be kept dry at all times either by storing under cover or providing waterproof covers to the stack. Care must be taken to avoid damage to edges, ends and surfaces. The sheathing must always be carried on edge. uPVC flashings and jointers must be protected from direct sunlight and physical damage, and should be stored flat and under cover.

5.2 Other accessories must be stored so they are kept clean, dry and undamaged.

Technical Literature

6.1 Refer to the Appraisals listing on the BRANZ website for details of the current Technical Literature for James Hardie Rigid Air Barriers. The Technical Literature must be read in conjunction with this Appraisal. All aspects of design, use, installation and maintenance contained in the Technical Literature and within the scope of this Appraisal must be followed.

Design Information

Framing

Timber Treatment

7.1 Timber wall framing behind James Hardie Rigid Air Barriers must be treated as required by NZBC Acceptable Solution B2/AS1.

Timber Framing

7.2 For HomeRAB™ Pre-Cladding installations, timber framing must comply with NZS 3604 for buildings or parts of buildings within the scope limitations of NZS 3604. Buildings or parts of buildings outside the scope of NZS 3604 must be to a specific design in accordance with NZS 3603 and AS/NZS 1170. Where specific design is required, the framing must be of at least equivalent stiffness to the framing provisions of NZS 3604. In all cases studs must be at maximum 600 mm centres. Dwangs must be fitted flush between the studs at maximum 1,200 mm centres. *(Note: The timber framing must also be suitable for the selected wall cladding. Refer to the selected cladding system's Technical Literature for specific framing requirements.)*

Readers are advised to check the validity of this Appraisal by referring to the Valid Appraisals listing on the BRANZ website, or by contacting BRANZ.

ABA20220988
APPROVED - Site Copy
Hastings District Council
20/09/2022

7.3 For RAB™ Board installations, timber framing must comply with NZS 3604 for buildings or parts of buildings within the scope limitations of NZS 3604. Buildings or parts of buildings outside the scope of NZS 3604 must be to a specific design in accordance with NZS 3603 and AS/NZS 1170 considering local factors. In all cases studs must be at maximum 600 mm centres for buildings situated in wind pressures up to 1.5 kPa ULS, and at maximum 400 mm centres for buildings situated in wind pressures greater than 1.5 kPa ULS up to 4.5 kPa ULS. Dwangs must be fitted flush between the studs at maximum 1,200 mm centres. *(Note: The timber framing must also be suitable for the selected wall cladding. Refer to the selected cladding system's Technical Literature for specific framing requirements.)*

7.4 Timber wall framing where James Hardie Rigid Air Barriers are joined must be 45 mm minimum finished width.

James Hardie Rigid Air Barrier Set Out

7.5 James Hardie Rigid Air Barriers must be installed vertically. At the base of the wall, the sheet must hang below the bottom plate a minimum of 15 mm. Sheet overhang where used with timber floors must hang below timber subfloor members a minimum of 15 mm, up to a maximum of 40 mm.

7.6 In all cases, HomeRAB™ Pre-Cladding and RAB™ Board sheet edges must be supported and fixed to the wall framing.

General

7.7 James Hardie Rigid Air Barriers are intended for use as rigid wall underlays fixed over timber-framed walls in order to support wind pressures, and to act as a secondary barrier to wind-driven rain.

Temporary Weather Protection

7.8 Commencing from installation, James Hardie Rigid Air Barriers must not be exposed to the weather for more than 180 days.

7.9 James Hardie Rigid Air Barriers may be used as a temporary weather protecting sheathing to allow the insulation and internal lining of the building to proceed before the wall cladding is installed. To achieve temporary weathertightness, all joints, internal and external corners of the James Hardie Rigid Air Barriers must be sealed, the roof cladding and soffit linings must be installed, the flexible sill and jamb flashing tape system must be installed around the window and door openings, and the window and door joinery must be installed complete with head flashings and air seals. The timber wall framing moisture content must not exceed that specified by the internal lining system supplier at the time of the insulation installation and internal lining application.

7.10 James Hardie Rigid Air Barriers are suitable for use under wall claddings as a rigid wall underlay as called up in NZBC Acceptable Solution E2/AS1, Table 23, except that non-absorbent claddings must not be installed directly over the James Hardie Rigid Air Barriers.

Table 1: NZBC E2/AS1 Table 23 Requirements

NZBC E2/AS1 Table 23 Rigid Wall Underlay Properties	Property Performance Requirement	James Hardie Rigid Air Barriers Actual Property Performance
Vapour Resistance	< 7 MN s/g	0.6 MN s/g
Water Resistance	> 20 mm	Pass

Structure

Mass

8.1 The mass of HomeRAB™ Pre-Cladding is approximately 6.5 kg/m^2 at equilibrium moisture content. The mass of 6 mm RAB™ Board is approximately 8.6 kg/m^2 at equilibrium moisture content. The mass of 9 mm RAB™ Board is approximately 13 kg/m^2 at equilibrium moisture content. This mass must be added to the selected wall cladding system mass when determining the overall wall cladding mass in terms of NZS 3604.

Readers are advised to check the validity of this Appraisal by referring to the Valid Appraisals listing on the BRANZ website, or by contacting BRANZ.

ABA20220988
APPROVED - Site Copy
Hastings District Council
20/09/2022

Wind Zones

8.2 HomeRAB™ Pre-Cladding is suitable for use in all Wind Zones of NZS 3604, up to, and including, Very High. The sheets must be fixed at centres as specified in Table 2. The fixings must be positioned a minimum of 12 mm from all sheet edges, and a minimum of 50 mm horizontally and 75 mm vertically from sheet corners. The fastener heads must finish flush with the sheet surface.

Table 2: HomeRAB™

NZS 3604 Wind Zone	Framing Set Out	HomeRAB™ Pre-Cladding Nailing Centres to Studs, Plates and Dwangs
Low, Medium and High	Studs at 600 mm centres maximum and dwangs at 800 mm centres	200 mm
Very High	Studs at 400 mm centres maximum and dwangs at 800 mm centres	200 mm

8.3 RAB™ Board is suitable for use in design wind pressures up to and including 4.5 kPa ULS when used in conjunction with wall cladding systems able to resist the same face load pressures. The sheets must be fixed at centres as specified in Table 3. The fixings must be positioned a minimum of 12 mm from all sheet edges, and a minimum of 50 mm horizontally and 75 mm vertically from sheet corners. The fastener heads must finish flush with the sheet surface.

Table 3: RAB™ Board Fixing Centres

Wind Pressure	Framing Set Out	RAB™ Board Nailing Centres to Studs, Plates and Dwangs
≤ 1.5 kPa ULS (NZS 3604 Wind Zone Medium)	Studs at 600 mm centres and dwangs at 1,200 mm	200 mm
> 1.5 kPa ULS and ≤ 4.5 kPa ULS (NZS 3604 Wind Zone High to Extra High)	Studs at 400 mm centres and dwangs at 1,200 mm	200 mm

Top Plate Hold Down Connections

8.4 James Hardie Rigid Air Barriers can be used as an alternative to wire dog connectors to achieve a top plate connection capacity of 4.7 kN in accordance with Fixing Type B of NZS 3604 Table 8.18. To achieve the connection strength, the HomeRAB™ Pre-Cladding and RAB™ Board sheets must be fixed along the top edge into the top plate with 50 x 2.8 mm hot-dip galvanised or ring shank stainless steel round head nails, or hand-driven 40 x 2.8 mm hot-dip galvanised or ring shank stainless steel HardieFlex™ nails at 75 mm centres. The fixings must be positioned a minimum of 20 mm from the sheet edge. The fastener heads must finish flush with the sheet surface. The remainder of the sheet is fixed in accordance with Table 2 or Table 3.

Wall Cladding Fixing

8.5 The length of the selected wall cladding fixing must be increased by a minimum of the thickness of the James Hardie Rigid Air Barrier to maintain the face load strength of the wall cladding system.

Bracing

8.6 HomeRAB™ Pre-Cladding and RAB™ Board can be used to provide structural bracing. This has not been assessed by this Appraisal and is outside its scope.

Readers are advised to check the validity of this Appraisal by referring to the Valid Appraisals listing on the BRANZ website, or by contacting BRANZ.

ABA20220988
APPROVED - Site Copy
Hastings District Council
20/09/2022

Inter-storey Deflection

8.7 RAB™ Board is suitable to accommodate inter-storey deflections. When installed in accordance with the detail contained in the Technical Literature, RAB™ Board is capable to withstanding SLS deflections up to height/180. For structures where greater inter-storey deflections are expected, a deflection head should be incorporated into design as detailed in the Technical Literature in conjunction with specific engineering design.

Durability

9.1 James Hardie Rigid Air Barriers meet code compliance with NZBC Clause B2.3.1 (a), not less than 50 years when used where the cladding durability requirement or expected serviceable life is not less than 50 years, e.g. behind masonry veneer, and code compliance with NZBC Clause B2.3.1 (b), 15 years where the cladding durability requirement is 15 years.

Serviceable Life

9.2 Provided they are not exposed to the weather or ultraviolet (UV) light for a total of more than 180 days, and provided the exterior cladding is maintained in accordance with the cladding manufacturer's instructions and the cladding remains weather resistant, James Hardie Rigid Air Barriers are expected to have a serviceable life of at least 50 years.

9.3 Areas of geothermal activity and coastal locations can be very corrosive to fasteners, especially coastal locations within distances of up to 500 metres of the sea including harbours, or 100 metres from tidal estuaries and sheltered inlets in some instances. These coastal locations are defined in NZS 3604 as Zone D. For the James Hardie Rigid Air Barriers when used as a rigid sheathing in Zone D they must be fixed with stainless steel fasteners. Fasteners outside Zone D may be hot-dip galvanised steel.

Maintenance

10.1 James Hardie Rigid Air Barriers will not normally require maintenance. However, if damage occurs to the cladding or lining protecting the sheathing or to the sheathing itself, the repairs or replacement must be carried out to ensure the integrity of the rigid wall underlay.

Prevention of Fire Occurring

11.1 James Hardie Rigid Air Barrier Sheets are considered a non-combustible material and need not be separated from heat sources such as fireplaces, heating appliances, flues and chimneys. However, when used in conjunction with, or attached to heat sensitive materials, the heat sensitive material must be separated from heat sources such as fireplaces, heating appliances and chimneys. Part 7 of NZBC Acceptable Solution C/AS1, C/AS2 and NZBC Verification Method C/VM1 provide methods for separation and protection of combustible materials from heat sources.

External Vertical Fire Spread

12.1 James Hardie RAB™ Board has been tested to NFPA 285 and can be used to meet the requirements of NZBC Clause C3.5 and C3.7 with regard to external vertical fire spread when external walls are constructed to the following specifications:

- 6 or 9 mm RAB™ Board installed in accordance with the technical literature; and,
- A cladding system comprised entirely of non-combustible components over James Hardie CLD fibre cement cavity battens; and,
- Pink Batts R2.2 Glasswool or insulation as specified by James Hardie fitted within the framing cavity throughout the external façade.

[Note: NZBC Clause C3.5 applies only to buildings where the building height exceeds 10 m. In these instances, the compliance of the selected cladding system with all aspects of the Building Code must be addressed by the designer.]

[Note: Alternative insulation types specified by James Hardie have not been assessed by BRANZ and is outside the scope of this Appraisal.]

Readers are advised to check the validity of this Appraisal by referring to the Valid Appraisals listing on the BRANZ website, or by contacting BRANZ.

ABA20220988
APPROVED - Site Copy
Hastings District Council
20/09/2022

12.2 James Hardie RAB™ Board with 20 x 40 mm timber cavity battens and James Hardie Axon Panel cladding system has been tested to NFPA 285 and is suitable to meet the requirements of NZBC Clause C3.5 with regard to external vertical fire spread.

- [Note: James Hardie Axon Panel cladding system has not been assessed by BRANZ and is outside the scope of this Appraisal.]

12.3 James Hardie RAB™ Board with 20 x 40 mm timber cavity battens and James Hardie Axon Panel cladding system has been tested to NFPA 285 and is therefore considered by NZBC Acceptable Solution C/AS2 to meet the requirements of NZBC Clause C3.7 with regard to external fire spread.

- [Note: James Hardie Axon Panel cladding system has not been assessed by BRANZ and is outside the scope of this Appraisal.]

External Moisture

13.1 James Hardie Rigid Air Barriers must be used behind claddings that meet the performance requirements of NZBC Clause E2.

13.2 James Hardie Rigid Air Barriers meet the performance requirements for a rigid wall underlay as specified in NZBC Acceptable Solution E2/AS1, Table 23, except that non-absorbent claddings must not be installed directly over the James Hardie Rigid Air Barriers.

13.3 James Hardie Rigid Air Barriers, when installed in accordance with the Technical Literature and this Appraisal, will assist in the total cladding system's compliance with NZBC Clause E2.

Installation Information

Installation Skill Level Requirements

14.1 All design and building work must be carried out in accordance with the James Hardie Rigid Air Barriers Technical Literature and this Appraisal by competent and experienced tradespersons conversant with rigid air barriers. Where the work involves Restricted Building Work (RBW) this must be completed by, or under the supervision of, a Licensed Building Practitioner (LBP) with the relevant License class.

System Installation

15.1 James Hardie Rigid Air Barriers may be cut by scoring and snapping, hand guillotine, hand or power saw. Holes and cut-outs may be formed by drilling a number of holes around the perimeter of the opening required and tapping out the centre with a hammer, or by using a hole saw.

15.2 Sheets must be dry prior to installation. Cut edges that are left exposed must be sealed prior to installation.

15.3 Prior to fixing James Hardie Rigid Air Barriers, a check must be made to ensure all sheet edges will be supported by framing. At the base of the wall, the sheet must hang below the bottom plate by a minimum of 15 mm.

15.4 James Hardie Rigid Air Barriers must be fixed to the timber framing with 40 mm or 50 x 2.8 mm hot-dip galvanised or ring shank stainless steel round head nails, or hand-driven 40 x 2.8 mm hot-dip galvanised or ring shank stainless steel HardieFlex™ nails. Refer to Table 2, Table 3 and Paragraph 8.4 for fixing centres and Paragraph 9.3 for material selection.

15.5 At vertical joints, James Hardie Rigid Air Barriers must be installed with a 2-3 mm gap between the sheet edges and must be supported over vertical framing. At horizontal joints between floor levels, James Hardie Rigid Air Barriers must be installed with a minimum 6 mm gap between the sheet edges and must be supported over horizontal framing. At inter-storey floor levels, James Hardie Rigid Air Barriers must not be fixed to inter-storey joists or blocking and must have a minimum 15 mm gap between the sheet edges at this point to allow for shrinkage of the framing. All horizontal joints must be flashed with a uPVC flashing.

15.6 Any damaged areas, such as holes or gaps around service penetrations, must be repaired. Damaged areas can be repaired by covering with joint sealing tape.

Readers are advised to check the validity of this Appraisal by referring to the Valid Appraisals listing on the BRANZ website, or by contacting BRANZ.

ABA20220988
APPROVED - Site Copy
Hastings District Council
20/09/2022

Joint Sealing Tape Installation

15.7 All vertical sheet joints, internal and external corners must be covered with 3M™ All Weather Flashing Tape 8067, SUPER-STICK flexible flashing tape or Thermakraft Premium Jointing Tape. The manufacturer's instructions regarding the application temperatures for the joint sealing tapes, and the requirements for the use of adhesive primer must be followed.

15.8 James Hardie Rigid Air Barriers must be cleaned of dust and other surface contaminants prior to the application of the joint sealing tape to ensure adequate adhesion is achieved.

Flexible Sill and Jamb Tape Installation

15.9 The selected flexible sill and jamb tape flashing system must be installed in accordance with the tape manufacturer's instructions, except where varied by the James Hardie Rigid Air Barriers Technical Literature. Particular attention must be paid to the installation of the sill and jamb tapes around window and door joinery openings to ensure all exposed timber wall framing in the opening is protected.

Inspections

15.10 The Technical Literature must be referred to during the inspection of James Hardie Rigid Air Barriers installations. When the construction sequence is followed in accordance with the Technical Literature, the Building Consent Authority (BCA) inspections for pre-cladding and pre-lining may be combined.

Health and Safety

16.1 Cutting of James Hardie Rigid Air Barriers must be carried out in well ventilated areas, and a dust mask and eye protection must be worn.

16.2 When power tools are used for cutting, grinding or forming holes, health and safety measures as set out in the Technical Literature must be undertaken because of the amount of dust generated.

16.3 Safe use and handling procedures for James Hardie Rigid Air Barriers and the components that make up the cladding system are provided in the relevant manufacturer's Technical Literature.

Basis of Appraisal

The following is a summary of the technical investigations carried out:

Tests

17.1 Testing has been carried out by James Hardie Building Products to determine the face load pressure resistance of HomeRAB™ Pre-Cladding. Testing has also been carried out by James Hardie Building Products to determine the face load pressure resistance of RAB™ Board in conjunction with Titan Facade Panels. The testing was completed in a National Association of Testing Authorities (NATA) Accredited laboratory and was observed by BRANZ. The test method and results have been reviewed by BRANZ and found to be satisfactory.

17.2 The resistance of James Hardie Rigid Air Barriers to water vapour transmission in accordance with AS/NZS 4200.1 and resistance to water penetration in accordance with AS/NZS 4201.4 has been completed by BRANZ.

17.3 Testing of specimens assembled containing James Hardie Rigid Air Barriers has been carried out to NFPA 285 by Intertek Group plc.

Readers are advised to check the validity of this Appraisal by referring to the Valid Appraisals listing on the BRANZ website, or by contacting BRANZ.

ABA20220988
APPROVED - Site Copy
Hastings District Council
20/09/2022

BRANZ

Other Investigations

18.1 Structural and durability opinions were given by BRANZ technical experts.

18.2 BRANZ expert opinion on NZBC E2 code compliance for James Hardie Rigid Air Barriers was based on evaluation of all details within the scope and as stated within this Appraisal. The details contained within the Technical Literature have been reviewed, and an opinion has been given by BRANZ technical experts that the system will meet the performance levels of Acceptable Solution E2/AS1 for rigid wall underlays.

18.3 BRANZ expert opinion on NZBC External Fire Spread compliance for James Hardie Rigid Air Barriers was based on evaluation of cladding types referenced in this Appraisal against the results of NFPA 285 testing

18.4 The non-combustibility of James Hardie Rigid Air Barriers have been assessed by BRANZ technical experts.

18.5 The Technical Literature for James Hardie Rigid Air Barriers has been examined by BRANZ and found to be satisfactory.

Quality

19.1 The manufacture of James Hardie Rigid Air Barriers has been examined by BRANZ, including methods adopted for quality control. Details regarding the composition of the materials used were obtained by BRANZ and found to be satisfactory.

19.2 The quality of materials, components and accessories supplied by James Hardie New Zealand Limited is the responsibility of James Hardie New Zealand Limited. The quality control system of James Hardie New Zealand Limited has been assessed and registered as meeting the requirements of ISO 9001: 2015.

19.3 Quality of installation on site of components and accessories supplied by James Hardie New Zealand Limited and the building contractor is the responsibility of the installer.

19.4 Designers are responsible for the building design, and building contractors are responsible for the quality of installation of the framing systems, uPVC flashings, joint seal tapes and flexible sill and jamb tape systems in accordance with the instructions of James Hardie New Zealand Limited.

Sources of Information

- AS/NZS 1170: 2002 Structural design action - General principles.
- AS/NZS 2908.2: 2000 Cellulose-cement products - Flat sheet.
- AS/NZS 4200.1: 1994 Pliable building membranes and underlays - materials.
- AS/NZS 4201.4: 1994 Pliable building membranes and underlays - Methods of test - Resistance to water penetration.
- NFPA 285: 2012 Standard method of test for the evaluation of flammability characteristics of exterior non-loadbearing wall assemblies containing components using the intermediate scale, multi-storey test apparatus.
- NZS 3602: 2003 Timber and wood-based products for use in building.
- NZS 3603: 1993 Timber Structures Standard.
- NZS 3604: 2011 Timber-framed buildings.
- Ministry of Business, Innovation and Employment Record of amendments – Acceptable Solutions, Verification Methods and handbooks.
- The Building Regulations 1992.

Readers are advised to check the validity of this Appraisal by referring to the Valid Appraisals listing on the BRANZ website, or by contacting BRANZ.

ABA20220988
APPROVED - Site Copy
Hastings District Council
20/09/2022

Amendments

Amendment No.1, dated 07 December 2020

This Appraisal has been amended to add Thermaflash and Thermakraft Premium Jointing Tape.

Readers are advised to check the validity of this Appraisal by referring to the Valid Appraisals listing on the BRANZ website, or by contacting BRANZ.

ABA20220988
APPROVED - Site Copy
Hastings District Council
20/09/2022

BRANZ

In the opinion of BRANZ, James Hardie Rigid Air Barriers are fit for purpose and will comply with the Building Code to the extent specified in this Appraisal provided they are used, designed, installed and maintained as set out in this Appraisal.

The Appraisal is issued only to James Hardie New Zealand Limited, and is valid until further notice, subject to the Conditions of Appraisal.

Conditions of Appraisal

1. This Appraisal:
   a) relates only to the product as described herein;
   b) must be read, considered and used in full together with the Technical Literature;
   c) does not address any Legislation, Regulations, Codes or Standards, not specifically named herein;
   d) is copyright of BRANZ.
2. James Hardie New Zealand Limited:
   a) continues to have the product reviewed by BRANZ;
   b) shall notify BRANZ of any changes in product specification or quality assurance measures prior to the product being marketed;
   c) abides by the BRANZ Appraisals Services Terms and Conditions;
   d) warrants that the product and the manufacturing process for the product are maintained at or above the standards, levels and quality assessed and found satisfactory by BRANZ pursuant to BRANZ's Appraisal of the product.
3. BRANZ makes no representation or warranty as to:
   a) the nature of individual examples of, batches of, or individual installations of the product, including methods and workmanship;
   b) the presence or absence of any patent or similar rights subsisting in the product or any other product;
   c) any guarantee or warranty offered by James Hardie New Zealand Limited.
4. Any reference in this Appraisal to any other publication shall be read as a reference to the version of the publication specified in this Appraisal.
5. BRANZ provides no certification, guarantee, indemnity or warranty, to James Hardie New Zealand Limited or any third party.

For BRANZ

Chelydra Percy
Chief Executive

Date of Issue:
07 December 2020

Readers are advised to check the validity of this Appraisal by referring to the Valid Appraisals listing on the BRANZ website, or by contacting BRANZ.

ABA20220988
APPROVED - Site Copy
Hastings District Council
20/09/2022

BRANZ Appraised
Appraisal No. 633 [2018]

INSULATED FAÇADE SYSTEM



Appraisal No. 633 (2018)

Amended 16 March 2020

This Appraisal replaces BRANZ Appraisal No. 633 (2009) and Appraisal No. 476 (2013)

BRANZ Appraisals

Technical Assessments of products for building and construction.

Resene Construction Systems

Rockcote Resene Ltd T/A Resene Construction Systems
PO Box 39108
Harewood
Christchurch

Tel: 03 338 6328

Fax: 03 338 6819

Web: www.reseneconstruction.co.nz

BRANZ

BRANZ
1222 Moonshine Rd,
RD1, Porirua 5381
Private Bag 50 908
Porirua 5240,
New Zealand
Tel: 04 237 1170
branz.co.nz

WFTAO
WORLD FEDERATION OF TECHNICAL ASSESSMENT ORGANISATIONS

Product

1.1 Insulated Façade System is a cavity-based Exterior Insulation and Finishing System (EIFS) wall cladding. It is an external wall cladding system for residential and light commercial type buildings where domestic construction techniques are used.

1.2 The system consists of Graphex (Neopor®), expanded polystyrene (EPS), extruded polystyrene (XPS) or polyisocyanurate (PIR) sheets fixed over battens to form the cavity. The plaster coating system consists of 5 mm thickness of fibreglass mesh reinforced, polymer-modified, cement-based plaster, which is finished with a cement-based finishing plaster that is then painted with a 100% acrylic-based paint system. The chosen finishing plaster is applied to give a range of different appearances, such as a sponge, patterned, adobe or spray textured finish.

1.3 The system incorporates Resene Construction Systems EdgeSeal joinery flashings. It also incorporates a primary and secondary means of weather resistance (first and second line of defence) against water penetration by separating the cladding from the external wall framing with a nominal 20 mm drained cavity.

Scope

2.1 Insulated Façade System has been appraised as an external wall cladding system for buildings within the following scope:

- the scope limitations of NZBC Acceptable Solution E2/AS1, Paragraph 1.1; and,
- with a risk score of 0-20, calculated in accordance with NZBC Acceptable Solution E2/AS1, Table 2; and,
- situated in NZS 3604 Wind Zones up to, and including Extra High.

2.2 Insulated Façade System has also been appraised for weathertightness and structural wind loading when used as an external wall cladding system for buildings within the following scope:

- the scope limitations of NZBC Acceptable Solution E2/AS1, Paragraph 1.1; and,
- constructed with timber and steel framing subject to specific engineering design; and,
- situated in specific design wind pressures up to a maximum design differential ultimate limit state (ULS) of 2.5 kPa.

2.3 Insulated Façade System must only be installed on vertical surfaces (except for tops of parapets, sills and balustrades, which must have a minimum 10° slope and be waterproofed in accordance with the Technical Literature).

2.4 The system is appraised for use with aluminium window and door joinery that is installed with vertical jambs and horizontal heads and sills. *(Note: The Appraisal of Insulated Façade System relies on the joinery meeting the requirements of NZS 4211 for the relevant Wind Zone or wind pressure.)*

Readers are advised to check the validity of this Appraisal by referring to the Valid Appraisals listing on the BRANZ website, or by contacting BRANZ.

ABA20220988
APPROVED - Site Copy
Hastings District Council
20/09/2022

2.2 Installation of components and accessories supplied by Resene Construction Systems and its approved applicators must be carried out only by Resene Construction Systems approved applicators.

Building Regulations

New Zealand Building Code (NZBC)

3.1 **In the opinion of BRANZ, Insulated Façade System if designed, used, installed and maintained in accordance with the statements and conditions of this Appraisal, will meet or contribute to meeting the following provisions of the NZBC:**

Clause B1 STRUCTURE: Performance B1.3.1, B1.3.2 and B1.3.4. Insulated Façade System meets the requirements for loads arising from self-weight, wind, impact and creep [i.e. B1.3.3 (a), (h), (j) and (q)]. See Paragraphs 10.1 - 10.4.

Clause B2 DURABILITY: Performance B2.3.1 (b), 15 years, B2.3.1 (c), 5 years and B2.3.2. Insulated Façade System meets these requirements. See Paragraphs 11.1 and 11.3.

Clause E2 EXTERNAL MOISTURE: Performance E2.3.2. Insulated Façade System meets this requirement. See Paragraphs 16.1 - 16.5.

Clause F2 HAZARDOUS BUILDING MATERIALS: Performance F2.3.1. Insulated Façade System meets this requirement and will not present a health hazard to people.

Technical Specification

4.1 System components and accessories supplied by Resene Construction Systems are as follows:

Cavity Battens

- **Graphex peel 'n' stick battens** –manufactured to meet the requirements of AS 1366 Part 3 with an approximate density of 18 kg/m^3. The battens are 45 mm wide by 21 mm thick, are supplied in 1200 mm lengths and are coated on the back face with an acrylic adhesive, which is protected prior to installation by a removable film.
- **Standard EPS cavity battens** – manufactured from high density (Class H) expanded polystyrene (EPS) with an approximate density of 24 kg/m^3. The battens are 40 mm wide by 22 mm thick and are supplied in 2400 mm lengths.
- **Timber cavity battens** – nominal 50 mm wide by 25 mm thick (minimum finished size of 45 mm wide by 18 mm thick) timber treated to minimum Hazard Class H3.1.

Graphex

- **Graphex sheets** are 50 - 100 mm thick with an approximate density of 18 kg/m^3. The sheets are supplied in lengths ranging from 2.4 to 3.6 m x 1.2 m wide and are manufactured to meet the requirements of AS 1366 Part 3.

EPS Sheets

- **EPS sheets** are 40-100 mm thick Class H with an approximate density of 24 kg/m^3, or 50 or 60 mm minimum thickness if using Class S with an approximate density of 16 kg/m^3. The sheets are supplied in lengths ranging from 2.4 to 3.6 m x 1.2 m wide and are manufactured to meet the requirements of AS 1366 Part 3.

XPS Sheets (XTherm Blue)

- **XPS sheets** are 50mm – 100 mm thick with an approximate density of 34kg/m3. The sheets are supplied in lengths ranging from 1.2,m and 2.2m x 0.6m wide and are manufactured to meet the requirements of AS 1366 Part 3.

PIR Sheets (XTherm PIR)

- **PIR sheets** are 50 mm thick with an approximate density of 35kg/m3. The sheets are supplied in lengths ranging from 1.2m and 2.2m x 0.6 m wide and are manufactured to meet the requirements of AS 1366 Part 3.

Readers are advised to check the validity of this Appraisal by referring to the Valid Appraisals listing on the BRANZ website, or by contacting BRANZ.

ABA20220988
APPROVED - Site Copy
Hastings District Council
20/09/2022

Base, Levelling and Waterproofing Plasters

- A base (mesh) coat is applied using one of the following renders, followed by a subsequent coat of the same render to level the surface.
- **Coarse Mesh Render** is a polymer-modified, Portland cement-based plaster supplied in 20 kg bags and mixed on site with clean drinking water. It is applied as the base coat in a minimum 2 mm layer followed by the embedment of fibreglass mesh reinforcement in the outer surface.
- **Rockcote PM100 Quick Render** is a dry mix, cement-based, polymer-modified plaster supplied in 20 kg bags and mixed on site with clean water. It is used as a base coat for bonding and bedding the fibreglass mesh and is trowel-applied to an approximate thickness of 4-5 mm.
- **Resene Construction Systems RMaxx** is a high-yielding, cement-free dispersion based basecoat plaster supplied in 20 kg pails. It is applied as the base coat in a minimum 1.5 mm layer followed by the embedment of fibreglass mesh reinforcement in the outer surface. An additional 1.0-1.5 mm is applied to fully encase the mesh.
- **HydroPlast** is an acrylic dry powder with cement activator, that when mixed with water creates a flexible waterproofing render for use over plastered balustrade and fixing blocks. It is supplied in 10 kg bags and is applied over the levelling render with a trowel in a 1 mm layer followed by the embedment of fibreglass mesh reinforcement in the outer surface.

Primer

- **Rockcote Render Prime** is a water-borne acrylic, polymer dispersion, tintable coating supplied in 15 litre pails. It is brush or roller-applied as a primer between the selected base coat and acrylic texture.
- **Resene Limelock** is a water-borne acrylic, polymer dispersion, tintable coating supplied in 10 litre pails. It is brush or roller applied as a primer between the mineral textures and the finishing system.

Mineral Texture Coating

- **Resene Construction Systems Mineral Textures** are dry mix, cement-based, polymer-modified plasters, supplied in 20 kg bags and mixed on site with clean water. They are trowel or spray applied to an approximate thickness of 1.0-3.0 mm.

Acrylic Texture Coating

- Resene Construction Systems acrylic texture coatings are ready mixed, tintable, mineral-filled, polymer-based, elastomeric high-build coating with in pail and dry film preservatives, supplied in 15 litre pails. They are spray or trowel applied to an approximate thickness of 0.5 – 2.0 mm. The selected Resene Construction Systems texture colour must have a minimum light reflectance value (LRV) of 25%.

uPVC Primer, Plaster Modifier, Waterproofing Plaster and Finishes

- **Multistop bedding compound** – used as a uPVC primer when mixed with diluted Acrylbond resin or water.
- **Acrylbond** is a water-based co-polymer resin supplied in 4 and 15 litre pails used as a plaster modifier.
- **Resene Lumbersider** is a water-borne 100% acrylic-based protective finish for use over mineral and acrylic textures. It is supplied in 4 and 10 litre pails and is brush or roller applied. The protective finish coat must have a minimum LRV of 25%.
- **Resene X200** is an acrylic waterproofing membrane for use as a protective finish over mineral and acrylic textures. It is supplied in 4 and 10 litre pails and is brush, roller or spray applied. The protective finish coat must have a minimum LRV of 25%.

Accessories

- **Reinforcing mesh** - alkali-resistant fibreglass mesh with a nominal mesh size of approximately 5 x 4 mm square and a weight of 160 g/m² for use in domestic and light commercial situations.
- **uPVC components** – starter strip flashing, standard corner flashing, vertical control joint, horizontal control joint, EdgeSeal sill, jamb and head flashings, and 40, 50, 60 mm and universal ventilated starter strips.

Readers are advised to check the validity of this Appraisal by referring to the Valid Appraisals listing on the BRANZ website, or by contacting BRANZ.

ABA20220988
APPROVED - Site Copy
Hastings District Council
20/09/2022

- **3M All Weather Flashing Tape 8067** – flexible flashing tape with a proprietary backing and an acrylic pressure sensitive adhesive to seal the EdgeSeal head flashing to the building underlay. The tape is available 76 mm wide in rolls 22.8 m long.
- **Graphex/EPS/XPS/PIR sheet nail fixings (timber frame)** – hot-dip galvanised steel flat head nails with 40 mm diameter washers. Refer to Table 1 for fixing length requirements. *(Note: Hot-dip galvanising must comply with AS/NZS 4680.)*
- **Sticky Mesh** - alkali-resistant fibreglass, 150 mm wide corner pieces

Table 1: Graphex/EPS/XPS/PIR sheet fixing lengths (timber frame)

Sheet Thickness	Nail Size (mm)
40	90 x 3.55
50	100 x 3.75
60	110 x 4.0
70	125 x 5.3
80	150 x 6.0
90	150 x 6.0
100	150 x 6.0

- **Graphex/EPS/XPS/PIR sheet screw fixings (timber frame)** – 8 gauge AS 3566 Corrosion Class 4 hot-dip galvanised wood screws with 40 mm diameter washers in NZS 3604 defined Exposure Zones B, C and D. Refer to Table 2 for fixing length requirements.

Table 2: Neopor® board and EPS sheet fixing lengths (timber frame)

Sheet Thickness	Minimum Screw Length (mm)
40	80
50	100
60	110
70	120
80	130
90	140
100	150

- **Graphex/EPS/XPS/PIR sheet screw fixings (steel frame)** – 8 gauge self-drilling AS 3566 Corrosion Class 4 hot-dip galvanised screws with 40 mm diameter washers in NZS 3604 defined Exposure Zones B, C and D. Refer to Table 3 for fixing length requirements.

Table 3: Graphex/EPS/XPS/PIR sheet fixing lengths (steel frame)

Sheet Thickness	Minimum Screw Length (mm)
40	80
50	95
60	95
70	105
80	115
90	125
100	135

- **Washers** - 40 mm diameter polypropylene washers.

4.2 Accessories used with the system which are supplied by the approved applicator are:

- **Waterproof membrane tapes** - tapes covered by a valid BRANZ Appraisal for use as waterproofing membranes over tops of plastered parapets, balustrades, fixing blocks and the like.
- **Flexible sealant** - sealant complying with NZBC Acceptable Solution E2/AS1, or sealant covered by a valid BRANZ Appraisal for use as a weather sealing sealant for exterior use.
- **Adhesive** - Compatible adhesive for gluing uPVC components to the Graphex EPS/XPS/PIR sheets as and where required.

4.3 Accessories used with the system which are supplied by the building contractor are:

Readers are advised to check the validity of this Appraisal by referring to the Valid Appraisals listing on the BRANZ website, or by contacting BRANZ.

ABA20220988
APPROVED - Site Copy
Hastings District Council
20/09/2022

- **Flexible wall underlay** - building paper complying with NZBC Acceptable Solution E2/AS1, Table 23, or breather-type membranes covered by a valid BRANZ Appraisal for use as wall underlays.
- **Flexible wall underlay support** - polypropylene strap, 75 mm galvanised mesh, galvanised wire, or additional vertical battens for securing the flexible building underlay in place and preventing bulging of the bulk insulation into the drainage cavity. [Note: mesh and wire galvanising must comply with AS/NZS 4534.]
- **Rigid wall underlay** - Plywood or fibre cement sheet complying with NZBC Acceptable Solution E2/AS1, Table 23, or rigid sheathing covered by a valid BRANZ Appraisal for use as rigid air barrier systems.
- **Flexible sill and jamb flashing tapes** - flexible flashing tapes complying with NZBC Acceptable Solution E2/AS1, Paragraph 4.3.11, or flexible flashing tapes covered by a valid BRANZ Appraisal for use around window and door joinery openings.
- **Window and door trim cavity airseal** - air seals complying with NZBC Acceptable Solution E2/AS1, Paragraph 9.1.6, or self-expanding, moisture cure polyurethane foam air seals covered by a valid BRANZ Appraisal for use around window, door and other wall penetration openings.

Handling and Storage

5.1 Handling and storage of all materials supplied by Resene Construction Systems or the approved installer, whether on or off site, are under the control of Resene Construction Systems approved installers. Dry storage must be provided on site for the fibreglass mesh and bags of plaster. Graphex /EPS/XPS/PIR sheets, battens, uPVC flashings and profiles must be protected from direct sunlight and physical damage, and should be stored flat and under cover. Liquid components must be stored in frost-free conditions.

5.2 Handling and storage of all materials supplied by the building contractor, whether on or off site, are under the control of the building contractor. Materials must be handled and stored in accordance with the relevant manufacturer's instructions.

Technical Literature

6.1 Refer to the Appraisals listing on the BRANZ website for details of the current Technical Literature for Insulated Façade System. The Technical Literature must be read in conjunction with this Appraisal. All aspects of design, use, installation and maintenance contained in the Technical Literature and within the scope of this Appraisal must be followed. Insulated Façade System listing on the BRANZ website excludes specific details. These details are outside the scope of this Appraisal.

Design Information

Framing

Timber Treatment

7.1 Timber wall framing behind Insulated Façade System must be treated as required by NZBC Acceptable Solution B2/AS1.

Timber Framing

7.2 Timber framing must comply with NZS 3604 for buildings or parts of buildings within the scope limitations of NZS 3604. Buildings or parts of buildings outside the scope of NZS 3604 must be to a specific design in accordance with NZS 3603 and AS/NZS 1170. Where specific design is required, the framing must be of at least equivalent stiffness to the framing provisions of NZS 3604. In all cases studs must be at maximum 600 mm centres for buildings designed to NZS 3604 in Wind Zones up to and including Very High and at maximum 400 mm centres for buildings situated in NZS 3604 Wind Zone Extra High and specifically designed buildings situated in Wind Zones above NZS 3604 defined Extra High. Dwangs must be fitted flush between the studs at maximum 800 mm centres.

Readers are advised to check the validity of this Appraisal by referring to the Valid Appraisals listing on the BRANZ website, or by contacting BRANZ.

ABA20220988
APPROVED - Site Copy
Hastings District Council
20/09/2022

7.3 Timber framing must have a maximum moisture content of 24% at the time of the cladding application. [Note: If sheets are fixed to framing with a moisture content of greater than 24% problems may occur at a later date due to excessive timber shrinkage.]

Steel Framing

7.4 Steel framing must be to a specific design meeting the requirements of the NZBC.

7.5 The minimum framing specification is 'C' section studs and nogs of overall section size of 75 mm web and 32 mm flange. Steel thickness must be minimum 0.55 mm.

7.6 For steel framed buildings situated within NZS 3604 defined Wind Zones up to, and including, Very High, studs must be at maximum 600 mm centres. For all other buildings studs must be at maximum 400 mm centres. Dwangs must be fitted flush between the studs at maximum 800 mm centres.

Graphex/EPS/XPS/PIR Sheet Setout

7.7 All vertical Neopor® board or EPS sheet edges must be supported and fixed through the cavity battens to the framing. Horizontal board edges must be supported at fixing locations with cavity spacers in accordance with the requirements of NZBC Acceptable Solution E2/AS1, Paragraph 9.1.8.2 (f). At the base of the wall, the Neopor® boards or EPS sheets must hang 50 mm below the supporting framing.

7.8 Additional framing will be required at soffits, internal and external corners and window and door openings for the support and fixing of sheet edges.

General

8.1 When Insulated Façade System is used for specifically designed buildings up to 2.5 kPa design differential ULS wind pressure, only the weathertightness aspects of the cladding and maximum framing centres and sheet fixing centres are within the scope of this Appraisal. All other aspects of the building need to be specifically designed and are outside the scope of this Appraisal.

8.2 Openings in the cavity vent strip provide a minimum ventilation opening area of 1000 mm^2 per lineal metre of wall in accordance with the requirements of NZBC Acceptable Solution E2/AS1, Paragraph 9.1.8.3 (b).

8.3 The ground clearance to finished floor levels as set out in NZS 3604 must be adhered to at all times. At ground level, paved surfaces, such as footpaths, must be kept clear of the bottom edge of the cladding system by a minimum of 100 mm, and unpaved surfaces by 175 mm in accordance with the requirements of NZBC Acceptable Solution E2/AS1, Table 18.

8.4 At balcony, deck or roof/wall junctions, the bottom edge of Insulated Façade System must be kept clear of any adjacent surface, or above the top surface of any adjacent roof flashing by a minimum of 35 mm in accordance with the requirements of NZBC Acceptable Solution E2/AS1, Paragraph 9.1.3.

8.5 All external walls of buildings must have barriers to airflow in the form of interior linings with all joints stopped for wind zones up to and including Very High, and rigid underlays for buildings in the Extra High wind zone and specifically designed buildings up to 2.5 kPa design differential ULS wind pressure. Unlined gables and walls must incorporate a rigid sheathing or an air barrier which meets the requirements of NZBC Acceptable Solution E2/AS1, Table 23. For attached garages, wall underlays must be selected in accordance with NZBC Acceptable Solution E2/AS1, Paragraph 9.1.3.4. Where rigid underlays are used, the fixing lengths must be increased by a minimum of the thickness of the underlay.

8.6 Where penetrations through the system are wider than the cavity batten spacing, allowance must be made for airflow between adjacent cavities. A minimum 10 mm gap must be left between the bottom of the vertical cavity batten and the flashing to the opening.

8.7 Where the system abuts other cladding systems, designers must detail the junction to meet their own requirements and the performance requirements of the NZBC. The Technical Literature provides some guidance. Details not included within the Technical Literature have not been assessed and are outside the scope of this Appraisal.

Readers are advised to check the validity of this Appraisal by referring to the Valid Appraisals listing on the BRANZ website, or by contacting BRANZ.

ABA20220988
APPROVED - Site Copy
Hastings District Council
20/09/2022

Electrical Cables

8.2 PVC sheathed electrical cables must be prevented from direct contact with the sheets. When cables must penetrate the sheets for exterior electrical connections, the cable must be directly supported by passing through an electrical conduit.

Control Joints

9.1 Control joints must be constructed in accordance with the Technical Literature, and be provided as follows:

- Horizontal control joints - at maximum 6 m centres.
- Vertical control joints - at maximum 8 m centres; aligned with any control joint in the structural framing; where the system abuts different cladding types, or where the system covers different structural materials.

[Note: Horizontal and Vertical Control joints must be located over structural supports. The design of vertical control joints where the system abuts different cladding types is outside the scope of this Appraisal and is the responsibility of the designer - see Paragraph 8.7.]

Inter-storey Junctions

9.2 Inter-storey drained joints must be constructed in accordance with the Technical Literature. Inter-storey joints must be provided to limit continuous cavities to the lesser of 2-storeys or 7 metres in height, in accordance with the requirements of NZBC Acceptable Solution E2/AS1, Paragraph 9.1.9.4 (b). (Note: Refer to Paragraph 14.2 for the requirements for barriers to vertical fire spread at inter-storey junctions for buildings of three or more floors.)

Structure

Mass

10.1 The mass of Insulated Façade System is approximately 7 kg/m^2, therefore it is considered a light wall cladding in terms of NZS 3604.

Impact Resistance

10.2 The system has adequate resistance to hard body impacts likely to be encountered in normal residential use. Where a greater level of impact protection is required a heavier grade of reinforcing mesh may be used. The heavy-grade fibreglass reinforcing mesh (360 g/m^2) embedded in 5 mm thick plaster provides approximately 4 times the hard body impact strength of the standard grade mesh in 3 mm thick plaster. The likelihood of impact damage to the system when used in light commercial situations should be considered at the design stage, and appropriate protection such as the installation of bollards and barriers should be considered for vulnerable areas.

Wind Zones

10.3 Insulated Façade System is suitable for use in all Wind Zones of NZS 3604, up to, and including Extra High where buildings are designed to meet the requirements of NZBC Acceptable Solution E2/AS1, Paragraph 1.1, or up to 2.5 kPa design differential ULS wind pressure where buildings are specifically designed.

Graphex/EPS/XPS/PIR Sheet Fixing

10.4 Sheets must be fixed through the cavity battens and cavity spacers to the wall framing at maximum centres specified in Table 4.

Readers are advised to check the validity of this Appraisal by referring to the Valid Appraisals listing on the BRANZ website, or by contacting BRANZ.

ABA20220988
APPROVED - Site Copy
Hastings District Council
20/09/2022

Table 4: Sheet Fixing Centres for Edges and Body of the Sheet

NZS 3604 Wind Zone	Maximum Fixing Centres (mm)
Low[1]	300
Medium[1]	300
High[1]	300
Very High[2]	200

1. One fixing is also required into each dwang and top and bottom plates at mid length.
2. Fixings are also required to each dwang at 200 mm centres and top and bottom plates at mid-dwang length.

NZS 3604 Wind Zone Extra High and specifically designed buildings up to 2.5 kPa design differential ULS wind pressure with studs at maximum 400 mm centres.		
Maximum vertical fixing centres (mm) along studs	Maximum horizontal fixing centres (mm) along top and bottom plates	Maximum horizontal fixing centres (mm) along dwangs
150	200	150

Durability

11.1 Insulated Façade System meets code compliance with NZBC Clause B2.3.1 (b), 15 years for the cavity system and plaster finish, and code compliance with NZBC Clause B2.3.1 (c), 5 years for the exterior paint system.

Serviceable Life

11.2 Insulated Façade System is expected to have a serviceable life of at least 30 years provided the system is maintained in accordance with this Appraisal, and the sheets, fixings and plaster are continuously protected by a weathertight coating and remain dry in service.

11.3 Microclimatic conditions, including geothermal hot spots, industrial contamination and corrosive atmospheres, and contamination from agricultural chemicals or fertilisers can convert mildly corrosive atmosphere into aggressive environments for fasteners. The fixing of sheets in areas subject to microclimatic conditions requires specific design in accordance with NZS 3604, Paragraph 4.2.4, and is outside the scope of this Appraisal.

Maintenance

12.1 Regular maintenance is essential to ensure the performance requirements of the NZBC are continually met and to ensure the maximum serviceability of the system.

12.2 Regular cleaning (at least annually) of the paint coating is required to remove grime, dirt and organic growth and to maximise the life and appearance of the coating. Grime may be removed by brushing with a soft brush, warm water and detergent. Paint systems must be recoated at approximately 5-10 yearly intervals in accordance with the paint manufacturer's instructions.

12.3 Annual inspections must be made to ensure that all aspects of the cladding system, including the coating system, plaster, flashings and any sealed joints remain in a weatherproof condition. Any cracks, damaged areas or areas showing signs of deterioration which would allow water ingress, must be repaired immediately. Sealant, coatings and the like must be repaired in accordance with the instructions of Resene Construction Systems.

12.4 Minimum ground clearances as set out in this Appraisal and the Technical Literature must be maintained at all times during the life of the system. (Note: Failing to adhere to the minimum ground clearances given in this Appraisal and the Technical Literature will adversely affect the long term durability of Insulated Façade System.)

Readers are advised to check the validity of this Appraisal by referring to the Valid Appraisals listing on the BRANZ website, or by contacting BRANZ.

ABA20220988
APPROVED - Site Copy
Hastings District Council
20/09/2022

Control of Internal Fire and Smoke Spread

13.1 The Graphex/EPS/XPS/PIR sheets used with the system meets the flame propagation criteria of AS 1366 as specified in NZBC Acceptable Solution C/AS1, Paragraph 4.2.2 or NZBC Acceptable Solutions C/AS2, Paragraph 4.17.2. The completed wall system, including the surface lining product enclosing the Graphex/EPS/XPS/PIR sheet from the adjacent occupied space, must achieve the Group Number for internal surface finish requirements as specified in the relevant NZBC Acceptable Solutions C/AS1 and C/AS2.

Control of External Fire Spread

14.1 Insulated Façade System using Graphex or EPS sheet, Rockcote PM100 Quick Render base coat with mineral texture finish, Rockcote Render Prime and Resene Construction Systems Premium Armour protective finishing coat has a peak heat release rate of less than 100 kw/m2 and a total heat released of less than 25 MJ/m2. Testing was carried out as per Paragraph 5.4 of NZBC Acceptable Solution C/AS1 and Paragraph 5.8.1 of NZBC Acceptable Solution C/AS2, achieving a Type A performance. The Insulated Facade System can therefore be used within 1m of the relevant boundary.

14.2 Insulated Façade System using any other substrate, Rockcote texture or surface finish has not been assessed for a peak heat release or total heat released rating.

14.3 For buildings in risk groups other than SH and VP Insulated Façade System is Appraised for use where the cladding extends over no more than 2 floors continuously.

14.4 Refer to NZBC Acceptable Solutions C/AS1 and C/AS2 and Verification Method C/VM2 for fire resistance rating and control of external fire spread requirements for external walls.

Prevention of Fire Occurring

15.1 Separation or protection must be provided to Insulated Façade System from heat sources such as fire places, heating appliances, flues and chimneys. Part 7 of NZBC Acceptable Solutions C/ AS1, C/AS2 and NZBC Verification Method C/VM1 provide methods for separation and protection of combustible materials from heat sources.

External Moisture

16.1 Insulated Façade System, when installed in accordance with this Appraisal and the Technical Literature, prevents the penetration of moisture that could cause undue dampness or damage to building elements.

16.2 The cavity must be sealed off from the roof and sub-floor space to meet code compliance with Clause E2.3.5.

16.3 Insulated Façade System allows excess moisture present at the completion of construction to be dissipated without permanent damage to building elements to meet code compliance with Clause E2.3.6.

16.4 The details given in the Technical Literature for weather sealing are based on the design principle of having a first and second line of defence against moisture entry for all joints, penetrations and junctions. The ingress of moisture must be excluded by detailing joinery and wall interfaces as shown in the Technical Literature. Weathertightness details that are developed by the designer are outside the scope of this Appraisal and are the responsibility of the designer for compliance with the NZBC.

16.5 The use of Insulated Façade System where there is a designed cavity drainage path for moisture that penetrates the cladding, does not reduce the requirement for junctions, penetrations, etc to remain weather resistant.

Internal Moisture

17.1 Insulated Façade System alone does not meet NZBC Acceptable Solution E3/AS1, Paragraph 1.1.1 (a). Buildings must be constructed with an adequate combination of thermal resistance and ventilation, and space temperature must be provided to all habitable spaces, bathrooms, laundries and other spaces where moisture may be generated or may accumulate.

Readers are advised to check the validity of this Appraisal by referring to the Valid Appraisals listing on the BRANZ website, or by contacting BRANZ.

ABA20220988
APPROVED - Site Copy
Hastings District Council
20/09/2022

Water Vapour

17.2 Insulated Façade System is not a barrier to the passage of water vapour, and when correctly installed will not create or increase the risk of moisture damage resulting from condensation.

17.3 When Insulated Façade System is installed over a steel frame, the battens and insulated drainage cavity will act as a thermal break to the steel frame in accordance with NZBC Acceptable Solution E3/AS1.

Energy Efficiency

Building Thermal Envelope

18.1 NZBC Acceptable Solution H1/AS1 or NZBC Verification Method H1/VM1 can be used for housing, communal residential, communal non-residential and commercial buildings.

Determining Thermal Resistance

18.2 The thermal resistance (R-values) of building elements may be verified by using NZS 4214. The BRANZ 'House Insulation Guide' Fifth Edition provides thermal resistances of common building elements and is based on calculations from NZS 4214. Calculations in accordance with NZS 4214 require that the ventilated air gap and the thermal resistance of each layer between the ventilated air gap and outside air be de-rated by a factor of 0.45. Therefore, in Insulated Façade System, unless better information is available for a specific case, the R-value of the Graphex layer must be taken as R0.69 (40 mm thick), R0.86 (50 mm thick), R1.03 (60 mm thick), R1.20 (70 mm thick), R1.38 (80 mm thick), R1.55 (90 mm thick) and R1.72 (100 mm thick) based on a thermal conductivity (k value) of 0.032 W/m °C; the R-value of Class H EPS must be taken as R0.58 (40 mm thick), R0.72 (50 mm thick), R0.87 (60 mm thick), R1.01 (70 mm thick), R1.16 (80 mm thick), R1.30 (90 mm thick) and R1.44 (100 mm thick) based on a k value of 0.038 W/m°C. R-values for XPS and PIR sheets have not been assessed and are outside the scope of this Appraisal.

Installation Information

Installation Skill Level Requirements

19.1 Installation and finishing of components and accessories supplied by Resene Construction Systems and its approved installers must be completed by trained applicators, approved by Resene Construction Systems.

19.2 Installation of the accessories supplied by the building contractor must be carried out in accordance with Insulated Façade System Technical Literature and this Appraisal by, or under the supervision of, a Licensed Building Practitioner (LBP) with the relevant Licence Class.

System Installation

Wall Underlay and Flexible Sill and Jamb Tape Installation

20.1 The selected wall underlay and flexible sill and jamb tape system must be installed by the building contractor in accordance with the underlay and tape manufacturer's instructions prior to the installation of the cavity battens and the rest of Insulated Façade System. Flexible wall underlay must be installed horizontally and be continuous around corners. Underlay must be lapped 75mm minimum at horizontal joints and 150mm minimum over studs at vertical joints. Generic rigid wall underlay materials must be installed in accordance with NZBC Acceptable Solution E2/AS1 and be overlaid with a flexible wall underlay. Proprietary systems shall be installed in accordance with the manufacturer's instructions. Particular attention must be paid to the installation of the wall underlay and sill and jamb tapes around window and door openings to ensure a continuous seal is achieved and all exposed wall framing in the opening is protected.

20.2 Where studs are at greater than 450 mm centres and a flexible wall underlay is being used, a wall underlay support must be installed over the underlay at maximum 300 mm centres horizontally.

Readers are advised to check the validity of this Appraisal by referring to the Valid Appraisals listing on the BRANZ website, or by contacting BRANZ.

ABA20220988
APPROVED - Site Copy
Hastings District Council
20/09/2022

Aluminium Joinery Installation

20.3 Aluminium joinery and associated head flashings must be installed by the building contractor in accordance with the Technical Literature. A 7.5-10 mm nominal gap must be left between the joinery reveal and the wall framing so a PEF rod and air seal can be installed after the joinery has been secured in place.

Insulated Façade System

20.4 The system must be installed in accordance with the Technical Literature by Resene Construction Systems approved installers.

20.5 The plaster system must only be applied when the air and substrate temperature is within the range of +5°C to +30°C.

Inspections

20.6 The Technical Literature must be referred to during the inspection of Insulated Façade System installations.

Finishing

20.7 The paint manufacturers' instructions must be followed at all times for application of the paint finish. The plaster must be cured for a minimum of 2-3 days and must be dry before commencing painting.

Health and Safety

21.1 Safe use and handling procedures for the components that make up Insulated Façade System are provided in the relevant manufacturer's Technical Literature.

Basis of Appraisal

The following is a summary of the technical investigations carried out:

Tests

22.1 The following testing has been completed by BRANZ:

- BRANZ expert opinion on NZBC E2 code compliance for Insulated Façade System was based on evaluation of all details within the scope and as stated within this Appraisal and testing of the Resene Construction Systems Insulated Facade System to E2/VM1. The testing assessed the performance of the foundation detail, window head, jamb and sill details, meter box head, jamb and sill details, vertical and horizontal control joints, internal and external corners and balustrade to wall junction with a plastered cap. In addition to the weathertightness test, the details contained within the Technical Literature have been reviewed, and an opinion has been given by BRANZ technical experts that the system will meet the performance levels of Acceptable Solution E2/AS1 for drained cavity claddings.
- Wind face load and fastener pull through testing for EIFS cladding systems. BRANZ determined design wind suction pressures, and by comparing these pressures with AS/NZS 1170 pressure coefficients, the fixing requirements were determined for timber and steel framed walls.
- Cone Calorimeter testing of the Insulated Façade plaster system over 40 mm EPS. The testing was carried out in accordance with AS/NZS 3837.

Readers are advised to check the validity of this Appraisal by referring to the Valid Appraisals listing on the BRANZ website, or by contacting BRANZ.

ABA20220988
APPROVED - Site Copy
Hastings District Council
20/09/2022

Other Investigations

23.1 Structural and durability opinions have been given by BRANZ technical experts.

23.2 Site visits have been carried out by BRANZ to assess the practicability of installation, and to examine completed installations.

23.2 The manufacturer's Technical Literature has been examined by BRANZ and found to be satisfactory.

Quality

24.1 The manufacture of the plasters and finishes has been examined by BRANZ, including methods adopted for quality control. Details regarding the quality and composition of the materials used were obtained by BRANZ and found to be satisfactory.

24.2 The quality of materials, components and accessories supplied by Resene Construction Systems is the responsibility of Resene Construction Systems.

24.3 Quality on site is the responsibility of the Resene Construction Systems approved installers.

24.4 Designers are responsible for the building design, and building contractors are responsible for the quality of installation of framing systems and joinery, wall underlays, flashing tapes, air seals and joinery head flashings in accordance with the instructions of Resene Construction Systems.

24.5 Building owners are responsible for the maintenance of Insulated Façade System in accordance with the instructions of Resene Construction Systems.

Sources of Information

- AS 1366.3: 1992 Rigid cellular plastic sheets for thermal insulation - Rigid cellular polystyrene - Moulded [RC/PS-M]
- AS 3566: 2002 Self-drilling screws for the building and construction industries.
- AS/NZS 1170: 2002 Structural design action – General principles.
- AS/NZS 3837: 1998 Method of test for heat and smoke release rates for materials and products using an oxygen consumption calorimeter.
- NZS 3602: 2003 Timber and wood-based products for use in building.
- NZS 3603: 1993 Timber Structures Standard.
- NZS 3604: 2011 Timber-framed buildings.
- NZS 4211: 2008 Specification for performance of windows.
- NZS 4214: 2006 Methods of determining the total thermal resistance of parts of buildings.
- Ministry of Business, Innovation and Employment Record of amendments - Acceptable Solutions, Verification Methods and handbooks.
- The Building Regulations 1992.

Amendments

Amendment No. 1, 16 March 2020

This Appraisal has been amended to update the system name, include Polyisocyanurate [PIR] and Extruded Polystyrene [XPS] sheets within the technical specification and update references to C/AS2.

Readers are advised to check the validity of this Appraisal by referring to the Valid Appraisals listing on the BRANZ website, or by contacting BRANZ.

ABA20220988
APPROVED - Site Copy
Hastings District Council
20/09/2022

BRANZ

In the opinion of BRANZ, Insulated Façade System is fit for purpose and will comply with the Building Code to the extent specified in this Appraisal provided it is used, designed, installed and maintained as set out in this Appraisal.

The Appraisal is issued only to Rockcote Resene Ltd T/A Resene Construction Systems, and is valid until further notice, subject to the Conditions of Appraisal.

Conditions of Appraisal

1. This Appraisal:
   a) relates only to the product as described herein;
   b) must be read, considered and used in full together with the Technical Literature;
   c) does not address any Legislation, Regulations, Codes or Standards, not specifically named herein;
   d) is copyright of BRANZ.
2. Rockcote Resene Ltd T/A Resene Construction Systems:
   a) continues to have the product reviewed by BRANZ;
   b) shall notify BRANZ of any changes in product specification or quality assurance measures prior to the product being marketed;
   c) abides by the BRANZ Appraisals Services Terms and Conditions;
   d) warrants that the product and the manufacturing process for the product are maintained at or above the standards, levels and quality assessed and found satisfactory by BRANZ pursuant to BRANZ's Appraisal of the product.
3. BRANZ makes no representation or warranty as to:
   a) the nature of individual examples of, batches of, or individual installations of the product, including methods and workmanship;
   b) the presence or absence of any patent or similar rights subsisting in the product or any other product;
   c) any guarantee or warranty offered by Rockcote Resene Ltd T/A Resene Construction Systems.
4. Any reference in this Appraisal to any other publication shall be read as a reference to the version of the publication specified in this Appraisal.
5. BRANZ provides no certification, guarantee, indemnity or warranty, to Rockcote Resene Ltd T/A Resene Construction Systems or any third party.

For BRANZ

Chelydra Percy
Chief Executive

Date of Issue:
22 November 2018

Readers are advised to check the validity of this Appraisal by referring to the Valid Appraisals listing on the BRANZ website, or by contacting BRANZ.

ABA20220988
APPROVED - Site Copy
Hastings District Council
20/09/2022

BRANZ Appraised
Appraisal No. 767 [2018]

PINK® BATTS® SKILLION ROOF INSULATION



Appraisal No. 767 (2018)

This Appraisal replaces BRANZ Appraisal No. 767 (2012).

BRANZ Appraisals

Technical Assessments of products for building and construction.

Tasman Insulation New Zealand Ltd
PO Box 12 069
Penrose
Auckland
Tel: 09 579 2139
Fax: 09 571 3482
Freephone: 0800 746 522
Web: www.pinkbatts.co.nz

BRANZ
1222 Moonshine Rd,
RD1, Porirua 5381
Private Bag 50 908
Porirua 5240,
New Zealand
Tel: 04 237 1170
branz.co.nz

Product

1.1 Pink® Batts® Skillion Roof Insulation is a range of resin bonded fibrous glasswool thermal insulating material, with a controlled thickness for use in skillion roof applications.

Scope

2.1 Pink® Batts® Skillion Roof Insulation has been appraised for use as a thermal insulation material for timber framed skillion roofs of domestic and commercial buildings.

Building Regulations

New Zealand Building Code (NZBC)

3.1 **In the opinion of BRANZ, Pink® Batts® Skillion Roof Insulation, if designed, used, installed and maintained in accordance with the statements and conditions of this Appraisal, will meet or contribute to meeting the following provisions of the NZBC:**

Clause B2 DURABILITY: Performance B2.3.1 (a) not less than 50 years. Pink® Batts® Skillion Roof Insulation meets this requirement. See Paragraph 9.1.

Clause E3 INTERNAL MOISTURE: Performance E3.3.1. Pink® Batts® Skillion Roof Insulation will contribute to meeting this requirement. See Paragraphs 14.1 and 14.2.

Clause F2 HAZARDOUS BUILDING MATERIALS: Performance F2.3.1. Pink® Batts® Skillion Roof Insulation meets this requirement and will not present a health hazard to people.

Clause H1 ENERGY EFFICIENCY: Performance H1.3.1 (a) and H1.3.2 E. Pink® Batts® Skillion Roof Insulation will contribute to meeting these requirements. See Paragraphs 15.1 and 15.2.

Readers are advised to check the validity of this Appraisal by referring to the Valid Appraisals listing on the BRANZ website, or by contacting BRANZ.

ABA20220988
APPROVED - Site Copy
Hastings District Council
20/09/2022

Technical Specification

4.1 Pink® Batts® Skillion Roof Insulation is a resin bonded fibrous glasswool insulation manufactured from recycled and/or virgin glass and cured urea extended phenolic resin. Pink® Batts® Skillion Roof Insulation is available as set out in Table 1.

Table 1: Pink® Batts® Skillion Roof Insulation product range.

R-value	Nominal Thickness (mm)	Width (mm)	Length (mm)	Nett Area (m^2)	Density (kg/m^3)
3.2	115	432	1220	3.7	22.6
3.6[1]	165	432	1220	6.3	10.3

1. Pink® Batts® Skillion Roof Insulation products that have the Environmental Choice license.

4.2 Pink® Batts® Skillion Roof Insulation is pink in colour and baled in pink polythene bags with labelling in compliance with AS/NZS 4859.1.

Handling and Storage

5.1 Pink® Batts® Skillion Roof Insulation must be stored under cover and in dry conditions. Heavy objects must not be stacked on the bales. The bales must be stored in an orientation that avoids excessive compression of the product.

5.2 In general, insulation products are sensitive to the length of time they are stored under compression packaging. Product that does not recover to its nominal thickness may not achieve the stated R-value.

Technical Literature

6.1 Refer to the Appraisal listing on the BRANZ website for details of the current Technical Literature for Pink® Batts® Skillion Roof Insulation. The Technical Literature must be read in conjunction with this Appraisal. All aspects of design, use, installation and maintenance contained in the Technical Literature and within the scope of this Appraisal must be followed.

Design Information

General

7.1 Pink® Batts® Skillion Roof Insulation is intended for use as thermal insulation to meet the requirements of the NZBC. Pink® Batts® Skillion Roof Insulation R-values of 3.2 $m^2°C/W$ and 3.6 $m^2°C/W$ can be used to meet the minimum schedule method R-values of NZBC Verification Method H1/VM1 or NZBC Acceptable Solution H1/AS1. Greater construction R-values can be achieved where specific design is used. For construction R-values refer to the BRANZ House Insulation Guide. Product R-values and dimensions are given in Table 1.

7.2 Pink® Batts® Skillion Roof Insulation thermal resistance (R-value) has been determined by testing to AS/NZS 4859.1, which is an acceptable method in NZBC Acceptable Solution H1/AS1.

7.3 Pink® Batts® Skillion Roof Insulation is designed to be friction-fitted between timber roof framing (rafters) in skillion roofs.

7.4 Pink® Batts® Skillion Roof Insulation is designed to maintain its labelled nominal thickness and to maintain ventilation in a skillion roof application.

7.5 The building envelope must be constructed to ensure the insulation remains dry during installation and throughout the life of the building.

7.6 The clearance requirements for downlights must be met and reference made to the manufacturers instructions and NZS 4246. See Paragraphs 11.1 -11.3.

Readers are advised to check the validity of this Appraisal by referring to the Valid Appraisals listing on the BRANZ website, or by contacting BRANZ.

ABA20220988
APPROVED - Site Copy
Hastings District Council
20/09/2022

Roof Ventilation

8.1 To prevent moisture transfer and to provide roof ventilation in skillion roof applications, separation of 25 mm minimum is required between the insulation and any rigid substrate or flexible roof underlay. Pink® Batts® Skillion Roof Insulation is designed to maintain its nominal thickness in order to achieve the 25 mm clearance in normal applications. The R3.2 product (115 mm nominal thickness) has been designed for minimum 140 mm deep rafters, and the R3.6 product (165 mm nominal thickness) has been designed for minimum 190 mm deep rafters.

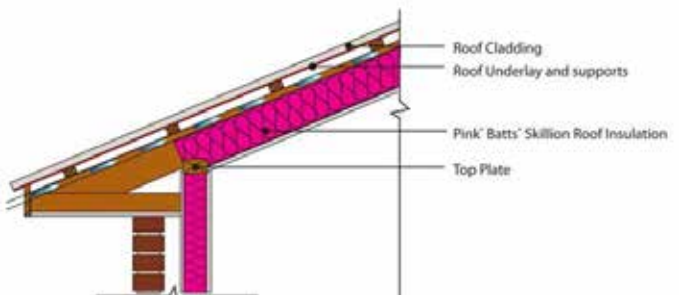

Durability

Serviceable Life

9.1 Where the building is maintained so that provisions of the NZBC Clauses E2 and E3 are met, and where the insulation is not crushed or exposed to conditions that will diminish its thermal performance (e.g. moisture), Pink® Batts® Skillion Roof Insulation can expect to have a serviceable life of at least 50 years.

Maintenance

10.1 Insulation that has become damp must be removed and the cause of dampness repaired. Cavities must be clean and dry before fitting new insulation of an equivalent thermal rating. NZS 4246 gives guidance on thermal insulation maintenance due to water damage.

Prevention of Fire Occurring

11.1 Pink® Batts® Skillion Roof Insulation is considered a non-combustible material and need not to be separated from heat sources such as fire places, heating appliances, flues and chimneys. However, when used in conjunction with, or attached to heat sensitive materials, the heat sensitive material must be separated from fireplaces, heating appliances, flues and chimneys in accordance with the requirements of Part 7 of NZBC Acceptable Solutions C/AS1 to C/AS6 and NZBC Verification Method C/VM1.

Downlights

11.2 Recessed luminaires shall be of type and be installed in accordance with NZBC Acceptable Solution C/AS1 to C/AS6, Section 7.4.

11.3 Insulation materials must maintain a clearance of 100 mm to undefined recessed luminaires in existing buildings.

Control of Internal Fire and Smoke Spread

12.1 Pink® Batts® Skillion Roof Insulation has been classified non-combustible when tested to AS 1530.1 and can therefore be assigned a Group Number of 1-S. Unless foamed plastics building materials are also used as part of the wall or ceiling construction, there are no internal surface finish requirements in Risk Group SH in accordance with NZBC Acceptable Solution C/AS1, Paragraph 4.2. When used in an occupied space, Pink® Batts® Skillion Roof Insulation does not need to be enclosed in any Risk Group. Refer to NZBC Acceptable Solutions C/AS2 to C/AS6 for the specific internal surface requirements for walls or ceilings in other Risk Groups.

Readers are advised to check the validity of this Appraisal by referring to the Valid Appraisals listing on the BRANZ website, or by contacting BRANZ.

ABA20220988
APPROVED - Site Copy
Hastings District Council
20/09/2022

External Moisture

13.1 The total building envelope must be weathertight and comply with the requirements of NZBC Clause E2 to ensure that the insulation remains dry in use.

13.2 The moisture content of the construction materials at the time of installing and enclosing the insulation must meet the requirements of NZBC Acceptable Solution E2/AS1, Paragraph 10.2 (a), or a lower moisture content if required by the lining manufacturer.

Internal Moisture

14.1 Buildings must provide an adequate combination of thermal resistance, ventilation and space temperature to all habitable spaces, bathrooms, laundries and other spaces where moisture may be generated or may accumulate. This does not apply to Communal Non-residential, Commercial, Industrial, Outbuildings or Ancillary buildings.

14.2 Roofs of housing complying with the Schedule Method for Compliance with Clause H1.3.2 E will have adequate thermal resistance. Other buildings may require more thermal insulation to satisfy the requirements of NZBC Acceptable Solution E3/AS1 than that to satisfy the energy efficiency provisions alone.

Energy Efficiency

15.1 Pink® Batts® Skillion Roof Insulation will contribute to meeting the requirements of NZBC Clause H1, Performance H1.3.1(a) and H1.3.2 E by compliance with NZBC Verification Method H1/VM1 or NZBC Acceptable Solution H1/AS1. Refer to Paragraphs 7.1 - 7.5.

15.2 Pink® Batts® Skillion Roof Insulation R-values have been determined by BRANZ testing to AS/NZS 4859.1 and are given in Table 1.

Installation Information

Installation Skill Level Requirements

16.1 Installation of Pink® Batts® Skillion Roof Insulation must be completed by an installer with an understanding of insulation installation.

General

17.1 Installation of Pink® Batts® Skillion Roof Insulation must be in accordance with the Technical Literature, Installation Instructions and this Appraisal. NZS 4246 should be used as a guide for installing insulation in residential buildings.

17.2 Pink® Batts® Skillion Roof Insulation must be installed only when the building is enclosed and when the construction materials have achieved the required maximum moisture content or less.

17.3 Pink® Batts® Skillion Roof Insulation must be released from the packaging and allowed to re-loft prior to installation. The time to loft will depend upon the length of time the product has been packaged and stored.

17.4 In situations where the material is installed from above (pre-roofing), planning and preparation must be undertaken to ensure the product does not get wet.

17.5 Where a controlled thickness is required, the installer must ensure the specified maximum thickness is not exceeded.

17.6 Pink® Batts® Skillion Roof Insulation is installed by friction-fitting the insulation between framing members. The insulation must not be folded, tucked or compressed. A close, even fit provides the most efficient thermal performance.

17.7 Pink® Batts® Skillion Roof Insulation is manufactured to suit roof rafter framing centres of 450 mm. Where the insulation is required to be cut to fit, the cut should be 10 mm wider than the space to ensure a friction fit.

17.8 The clearance requirements for heating appliances and downlights must be followed. Refer also to NZS 4246.

Readers are advised to check the validity of this Appraisal by referring to the Valid Appraisals listing on the BRANZ website, or by contacting BRANZ.

ABA20220988
APPROVED - Site Copy
Hastings District Council
20/09/2022

Inspections

17.9 The Technical Literature, this Appraisal and NZS 4246 must be referred to during the inspection of Pink® Batts® Skillion Roof Insulation installations.

Health and Safety

18.1 Refer to the Technical Literature and NZS 4246 for guidance on health and safety requirements such as personal protective clothing and installation hazard assessment.

18.2 Pink® Batts® Skillion Roof Insulation is manufactured using fibre technology to ensure that the product meets the bio-solubility requirements. *(Note: This has not been assessed and is outside the scope of this Appraisal.)*

Basis of Appraisal

The following is a summary of the technical investigations carried out:

Tests

19.1 BRANZ has carried out thermal resistance testing of Pink® Batts® Skillion Roof Insulation in accordance with AS/NZS 4859.1.

19.2 Tests have been carried out in accordance with AS 1530.1. Pink® Batts® Skillion Roof Insulation is not deemed combustible according to the test criteria. The results have been reviewed by BRANZ technical experts.

Other Investigations

20.1 An assessment of the durability of Pink® Batts® Skillion Roof Insulation has been made by BRANZ technical experts.

20.2 The manufacturer's Technical Literature including Installation Instructions have been reviewed by BRANZ and found to be satisfactory.

Quality

21.1 The manufacture of Pink® Batts® Skillion Roof Insulation has been examined by BRANZ, including methods adopted for quality control. Details of the manufacturing processes, and quality and composition of the raw materials used were obtained and found to be satisfactory.

22.1 The range of Pink® Batts Skillion Roof Insulation products have been assessed for their environmental impact by the New Zealand Ecolabelling Trust and comply with the requirements of the Environmental Choice Specification, Licence No. 2504017 - Thermal (resistive type) Building Insulants. The products that have the Environmental Choice license are noted in Table 1.

22.2 Tasman Insulation New Zealand Ltd is responsible for the quality of the product supplied.

22.3 Quality of installation of the product on site is the responsibility of the installer.

22.4 Quality of maintenance of the building to ensure the insulation material remains dry is the responsibility of the building owner.

Sources of Information

- AS 1530.1: 1994 Combustibility test for materials.
- AS/NZS 4859.1: 2002 Materials for the thermal insulation of buildings.
- NZS 4246: 2016 Energy efficiency - Installing bulk thermal insulation in residential buildings.
- BRANZ House Insulation Guide, Fifth Edition 2014.
- BRANZ Bulletin Number 525 Preventing moisture problems in timber-framed skillion roofs.
- Acceptable Solution and Verification Methods for New Zealand Building Code Energy Efficiency Clause H1, Ministry of Business, Innovation and Employment, Fourth Edition, (including Amendment 3, 1 January 2017).
- Ministry of Business, Innovation and Employment Record of Amendments - Acceptable Solutions, Verification Methods and Handbooks.
- The Building Regulations 1992.

Readers are advised to check the validity of this Appraisal by referring to the Valid Appraisals listing on the BRANZ website, or by contacting BRANZ.

ABA20220988
APPROVED - Site Copy
Hastings District Council
20/09/2022

BRANZ

In the opinion of BRANZ, Pink® Batts® Skillion Roof Insulation is fit for purpose and will comply with the Building Code to the extent specified in this Appraisal provided it is used, designed, installed and maintained as set out in this Appraisal.

The Appraisal is issued only to Tasman Insulation New Zealand Ltd, and is valid until further notice, subject to the Conditions of Appraisal.

Conditions of Appraisal

1. This Appraisal:
   a) relates only to the product as described herein;
   b) must be read, considered and used in full together with the Technical Literature;
   c) does not address any Legislation, Regulations, Codes or Standards, not specifically named herein;
   d) is copyright of BRANZ.
2. Tasman Insulation New Zealand Ltd:
   a) continues to have the product reviewed by BRANZ;
   b) shall notify BRANZ of any changes in product specification or quality assurance measures prior to the product being marketed;
   c) abides by the BRANZ Appraisals Services Terms and Conditions;
   d) warrants that the product and the manufacturing process for the product are maintained at or above the standards, levels and quality assessed and found satisfactory by BRANZ pursuant to BRANZ's Appraisal of the product.
3. BRANZ makes no representation or warranty as to:
   a) the nature of individual examples of, batches of, or individual installations of the product, including methods and workmanship;
   b) the presence or absence of any patent or similar rights subsisting in the product or any other product;
   c) any guarantee or warranty offered by Tasman Insulation New Zealand Ltd.
4. Any reference in this Appraisal to any other publication shall be read as a reference to the version of the publication specified in this Appraisal.
5. BRANZ provides no certification, guarantee, indemnity or warranty, to Tasman Insulation New Zealand Ltd or any third party.

For BRANZ

Chelydra Percy
Chief Executive

Date of Issue:
03 August 2018

Readers are advised to check the validity of this Appraisal by referring to the Valid Appraisals listing on the BRANZ website, or by contacting BRANZ.

ABA20220988
APPROVED - Site Copy
Hastings District Council
20/09/2022

BRANZ Appraised
Appraisal No. 1096 [2020]

ROSS ROOF GROUP ROOFING SYSTEMS



Appraisal No. 1096 (2020)

BRANZ Appraisals

Technical Assessments of products for building and construction.

Ross Roof Group Ltd
1C Inlet Road
Takanini
Auckland 2112
Tel: 09 299 9498
Email: info@metrotile.com
Web: www.rossroofgroup.com

BRANZ
1222 Moonshine Rd,
RD1, Porirua 5381
Private Bag 50 908
Porirua 5240,
New Zealand
Tel: 04 237 1170
branz.co.nz

Product

1.1 The Ross Roof Group Roofing Systems are available in seven different pressed metal roofing tile profiles with stone coated surface finishes or painted satin finishes in a range of finishing colours.

1.2 The pressed metal roofing tiles and flashing accessories form roofing systems installed over roofing underlay and roofing battens.

1.3 The tiles are branded with Ross Roof Group on the underside of the tile.

Scope

2.1 The Ross Roof Group Roofing Systems have been appraised as roof claddings for buildings within the following scope:

- the scope limitations of NZBC Acceptable Solution E2/AS1, Paragraph 1.1, with regard to floor plan area and building height; and,
- constructed with timber roof framing and timber battens specified in this Appraisal; and
- with a minimum roof pitch in accordance with Table 1 of this Appraisal and a maximum roof pitch of 60°; and,
- situated in NZS 3604 Wind Zones up to and including Extra High.

Building Regulations

New Zealand Building Code (NZBC)

3.1 **In the opinion of BRANZ, the Ross Roof Group Roofing Systems, if designed, used, installed and maintained in accordance with the statements and conditions of this Appraisal, will meet the following provisions of the NZBC:**

Clause B1 STRUCTURE: Performance B1.3.1, B1.3.2 and B1.3.4. The Ross Roof Group Roofing Systems meet the requirements for loads arising from self-weight, gravity loads, temperature, snow, wind, impact and creep [i.e. B1.3.3 (a), (b), (c), (g), (h), (j), and (q)]. See Paragraphs 8.1 – 8.7.

Clause B2 DURABILITY: Performance B2.3.1 (b), 15 years. The Ross Roof Group Roofing Systems meet this requirement. See Paragraphs 9.1 and 9.2.

Clause E2 EXTERNAL MOISTURE: Performance E2.3.1 and E2.3.2. The Ross Roof Group Roofing Systems meet these requirements. See Paragraphs 13.1 and 13.2.

Clause F2 HAZARDOUS BUILDING MATERIALS: Performance F2.3.1. The Ross Roof Group Roofing Systems meet this requirement and will not present a health hazard to people.

Readers are advised to check the validity of this Appraisal by referring to the Valid Appraisals listing on the BRANZ website, or by contacting BRANZ.

ABA20220988
APPROVED - Site Copy
Hastings District Council
20/09/2022

Technical Specification

4.1 The Ross Roof Group Roofing Systems are pressed metal tile roofing systems manufactured from Zincalume® steel and finished with a stone chip coating or painted satin finish. These are available in seven profiles as set out in Table 1.

Table 1: Ross Roof Group Roofing Systems Specifications

Profile	Antica	Bond	Classic	Roman
Dimensions (l x w)	1300 mm x 428 mm	1330 mm x 425 mm	1330 mm x 418 mm	1295 mm x 420 mm
Effective coverage (l x w)	1220 mm x 368 mm	1260 mm x 368 mm	1260 mm x 368 mm	1215 mm x 365 mm
Profile height	29 mm	14 mm	18 mm	29 mm
weight/tile	2.0 kg (satin) 3.0 kg (stone chip)	2.1 (satin) 3.0 (stone chip)	2.1 (satin) 3.0 (stone chip)	2.9 (stone chip)
weight/m^2	4.3 kg (satin) 6.4 kg (stone chip)	4.4 (satin) 6.4 (stone chip)	4.5 (satin) 6.4 (stone chip)	6.3 (stone chip)
Tile fasteners in Wind Zone up to and including extra high	4 per tile as specified in E2/AS1	4 per tile as specified in E2/AS1	4 per tile as specified in E2/AS1	4 per tile as specified in E2/AS1
Tile fastener dimensions	50 mm x 3.05 mm	50 mm x 3.05 mm	50 mm x 3.05 mm	50 mm x 3.05 mm
Batten dimensions	50 mm x 40 mm	50 mm x 40 mm	50 mm x 40 mm	50 mm x 40 mm
Min/max roof pitch*	12.5°/60°	12.5°/60°	12.5°/60°	12.5°/60°

Table 1 continued...

Profile	Royal	Shake	Tudor
Dimensions (l x w)	1350 mm x 420 mm	1345 mm x 411 mm	1335 mm x 414 mm
Effective coverage (l x w)	1260 mm x 368 mm	1260 mm x 368 mm	1260 mm x 368 mm
Profile height	24 mm	10 mm	18 mm
weight/tile	3.0 (stone chip)	2.1 (satin) 3.0 (stone chip)	2.1 (satin) 3.0 (stone chip)
weight/m^2	6.4 kg (stone chip)	4.5 kg (satin) 6.4 kg (stone chip)	4.5 (satin) 6.4 (stone chip)
Tile fasteners in Wind Zone up to and including extra high	4 per tile as specified in E2/AS1	4 per tile as specified in E2/AS1	4 per tile as specified in E2/AS1
Tile fastener dimensions	50 mm x 3.05 mm	50 mm x 3.05 mm	50 mm x 3.05 mm
Batten dimensions	50 mm x 40 mm	50 mm x 40 mm	50 mm x 40 mm
Min/max roof pitch*	15°/60°	15°/60°	12.5°/60°

*Where the rafter/truss length exceeds 12 m, the minimum roof pitch shall increase by 1° per additional 0.5 m.

Accessories

- **Roofing battens** - 50 mm x 40 mm or 50 mm x 50 mm rough sawn H1.2 treated timber, as specified in NZS 3604, Table 10.12.
- **Roof underlay** - BRANZ Appraised roof underlay, specified and supplied by the Ross Roof Group.
- **Batten Fasteners** - 90 mm x 3.15 mm D head, bright steel for battens to trusses in Wind Zones up to and including Very High, and 10g self-drilling 80 mm long screws for Extra High Wind Zone, as specified in NZS 3604, Table 10.12.
- **Tile Fasteners** - 50 x 3.05 mm hot-dipped galvanized painted flat-head annular-grooved nails. For fastening through the top of the tiles the nails must be fitted with a neoprene washer.
- **Flashings** - as specified in the Technical Literature and manufactured by the Ross Roof Group.

Readers are advised to check the validity of this Appraisal by referring to the Valid Appraisals listing on the BRANZ website, or by contacting BRANZ.

ABA20220988
APPROVED - Site Copy
Hastings District Council
20/09/2022

Handling and Storage

5.1 The Ross Roof Group Roofing Systems must be transported and handled with care to avoid damaging the pre-finished surfaces.

5.2 Long term storage of the roofing tiles and accessories must be under dry, ventilated cover. For short term storage on site, the tiles must be stored flat, no more than one pallet high, and off the ground.

5.3 Handling and storage of all materials supplied by the Ross Roof Group Ltd, whether on or off site, are under the control of the installer. Materials must be handled and stored in accordance with the relevant manufacturer's instructions.

Technical Literature

6.1 Refer to the Appraisals listing on the BRANZ website for details of the current Technical Literature for the Ross Roof Group Roofing Systems. The Technical Literature must be read in conjunction with this Appraisal. All aspects of design, use, installation and maintenance contained in the Technical Literature and within the scope of this Appraisal must be followed.

Design Information

General

7.1 Roof framing must comply with NZS 3604, or be to a specific design in accordance with NZS 3603 and AS/NZS 1170.

7.2 Timber roof framing must be treated as required by NZS 3602 for the building design application.

7.3 Roof design must take into account any requirements for areas subject to regular snowfalls as required by NZBC Acceptable Solution E2/AS1, Paragraph 1.3.

7.4 Roof underlay must be installed as required by NZBC Acceptable Solution E2/AS1, Paragraph 8.3.6 and Paragraph 8.1.5.

7.5 The minimum roof pitch is profile dependent and listed in Table 1. Where the rafter/truss length exceeds 12 m, the minimum roof pitch shall increase by 1° per additional 0.5 m. The maximum roof pitch is 60°.

7.6 Roof penetrations not detailed in the Technical Literature are the responsibility of the designer and are outside the scope of this Appraisal.

7.7 Tile battens must be installed in accordance with the Technical Literature and NZS 3604.

7.8 The collection of potable water has not been assessed and is outside the scope of this Appraisal.

Structure

Mass

8.1 The approximate masses of the Ross Roof Group Roofing tiles are given in Table 1.

8.2 The total mass of the Ross Roof Group Roofing Systems are expected to not exceed 20 kg/m² and is therefore considered to be a light roof as defined in NZS 3604.

Snow

8.3 The Ross Roof Group Roofing Systems are suitable for use in areas where buildings are designed for a 1 kPa snow loading. Refer to the Ross Roof Group Ltd for installation details for snow-prone areas.

Wind Zones

8.4 When fixed in accordance with the manufacturer's instructions and this Appraisal, the Ross Roof Group Roofing Systems are suitable for use in all NZS 3604 Wind Zones, up to, and including Extra High. Refer to E2/AS1, NZS 3604 and the Technical Literature for fastening requirements.

Readers are advised to check the validity of this Appraisal by referring to the Valid Appraisals listing on the BRANZ website, or by contacting BRANZ.

ABA20220988
APPROVED - Site Copy
Hastings District Council
20/09/2022

Tile battens

8.5 Rafters or trusses must be at maximum 1200 mm centres.

8.6 For the Ross Roof Group Roofing Systems the batten dimensions are 50 mm x 40 mm. Tile battens must be H1.2 treated.

8.7 Tile battens must be fastened as described in NZS 3604 and the Technical Literature.

Durability

9.1 The Ross Roof Group Roofing Systems meet the durability requirement of 15 years provided maintenance is carried out in accordance with this Appraisal and the Technical Literature.

Serviceable Life

9.2 The Ross Roof Group Roofing Systems are expected to have a serviceable life as detailed in Table 2 if maintenance is carried out in accordance with the Technical Literature.

Table 2: Minimum expected serviceable life.

Roof care	NZS 3604:2011 Exposure Zone	
	Zone B	Zone C
Cleaning and re-coating	50 years	30 years
Cleaning only	35 years	20 years

Weathering

9.3 The Ross Roof Group Roofing Systems with a stone chip finish may lose some stone granules over a period of time.

9.4 The Ross Roof Group Roofing Systems with a satin coating may fade slightly over a period of time.

Maintenance

10.1 Little maintenance should be required apart from the removal of lichen, moss and organic growth that may become established and the removal of accumulations of the stone granules in spouting.

10.2 Annual inspections must be made to ensure that all aspects of the roof cladding, including the pre-finished coating, the flashings and any joints remain in a weatherproof condition. Any damaged areas or areas showing signs of deterioration which would allow water ingress must be repaired immediately.

10.3 A water-based chemical treatment recommended by the Ross Roof Group Ltd as being suitable for use with the Ross Roof Group Roofing Systems must be used for the removal of organic material. Petroleum-based solvents or cleaners must not be used.

10.4 Areas of the roof that are not washed by rain should be washed down with fresh water approximately every six months.

10.5 In marine environments, or in areas exposed to industrial pollution, washing down should be carried out every two to three months.

10.6 To avoid cracking, denting or any other damage to the tiles, walking on the roof should be avoided. If it is necessary to walk on the roof, soft-soled shoes should be worn, and loads should be placed over battens or rafters.

Prevention of Fire Occurring

11.1 Separation or protection must be provided to the combustible materials of the Ross Roof Group Roofing Systems from heat sources such as fireplaces, heating appliances and chimneys. Part 7 of NZBC Acceptable Solution C/AS1 and C/AS2, and NZBC Verification Method C/VM1 provide methods for separation and protection of combustible materials from heat sources.

Readers are advised to check the validity of this Appraisal by referring to the Valid Appraisals listing on the BRANZ website, or by contacting BRANZ.

ABA20220988
APPROVED - Site Copy
Hastings District Council
20/09/2022

External Moisture

12.1 The Ross Roof Group Roofing Systems, when installed in accordance with this Appraisal and the Technical Literature, will shed precipitated moisture and therefore meet the performance requirements of NZBC Clause E2.3.1. They will also prevent the penetration of water that could cause undue dampness, or damage to building elements, therefore meeting the performance requirements of NZBC Clause E2.3.2.

Construction Moisture

12.2 The Ross Roof Group Roofing Systems when installed in accordance with this Appraisal and the Technical Literature will allow excess moisture present at the completion of construction to be dissipated without permanent damage to building elements and therefore meet the performance requirements of NZBC Clause E2.3.6. This is achieved by ensuring the construction moisture levels are no higher than 18% when the roofing tiles are laid and before the ceiling is closed-in, as well as providing an adequate level of roof cavity ventilation.

Internal Moisture

13.1 Adequate roof space ventilation is necessary to ensure roof space internal moisture levels and temperatures are controlled. Roof space ventilation requirements are given in the Technical Literature.

13.2 Air should be allowed to flow from the bottom to the top of the roof. In skillion-type roofs, a clear, uninterrupted, ventilated air gap of at least 25 mm must be present under Ross Roof Group Roofing Systems.

13.3 The Ross Roof Group Ltd should be consulted for further advice and information on roof ventilation and moisture control, especially when the roof design is unusual.

Installation Information

Installation Skill Level Requirements

14.1 All design and building work must be carried out in accordance with the Ross Roof Group Roofing Systems Technical Literature and this Appraisal. Where the work involves Restricted Building Work this must also be completed by, or under the supervision of, a Licensed Building Practitioner (LBP) with the relevant License class.

14.2 Technical Literature must be referred to during all inspections of the Ross Roof Group Roofing Systems installations.

System Installation

Roofing Battens

15.1 Roofing battens and framing must have a maximum moisture content of 18% at the time of the installation of the roofing tiles.

15.2 The roofing battens must be designed and installed in accordance with NZS 3604 and the Technical Literature.

15.2 Roofing battens of 50 mm x 40 mm must be used for rafters or trusses at 900 mm centres and roofing battens of 50 mm x 50 mm must be used for rafters or trusses at 1200 mm centres.

15.3 Two gun nails per fastening point of 90 mm x 3.15 mm must be used for Wind Zones up to and including Medium for rafter or trusses at 1200 mm centres and for Wind Zones up to and including Very High for rafter or trusses at 900 mm centres as per NZS 3604.

15.4 One 80 mm x 10g self-drilling screw per fastening point must be used for Wind Zones High to Extra High for rafter or trusses at 1200 mm centres and for Extra High Wind Zone for rafter or trusses at 900 mm centres as per NZS 3604.

Roof Underlay

16.1 The roof underlay must be tightly laid horizontally across the roof, and completely cover hips, ridges (except where ridge vents are used), and valleys.

Readers are advised to check the validity of this Appraisal by referring to the Valid Appraisals listing on the BRANZ website, or by contacting BRANZ.

ABA20220988
APPROVED - Site Copy
Hastings District Council
20/09/2022

16.2 When plywood sheathing is used, the roof underlay is installed to the requirements of the Technical Literature.

16.3 When battens are used the roof underlay is installed to the requirements of NZBC Acceptable Solution E2/AS1, Paragraph 8.3.6 and the Technical Literature.

16.4 Only sufficient fasteners to temporarily hold the underlay in place need be used.

Roofing Tiles Installation

17.1 The Ross Roof Group Roofing tiles must be fixed with 50 mm x 3.05 mm hot dipped galvanized painted flat-head annular-grooved nails. Tiles are fixed with four fasteners per tile through the turn-down for the body of the roof. Tiles at the eaves are fixed with four nail fasteners which include a neoprene washer. The fasteners must be near the high point in the tile profile. This follows the requirements of NZBC Acceptable Solution E2/AS1 and the Technical Literature.

System Installation

18.1 For the installation of the roofing tiles and the flashings the Technical Literature must be referred to.

Health and Safety

19.1 Safe use and handling procedures for the Ross Roof Group Roofing Systems are provided in the manufacturer's Technical Literature.

Readers are advised to check the validity of this Appraisal by referring to the Valid Appraisals listing on the BRANZ website, or by contacting BRANZ.

ABA20220988
APPROVED - Site Copy
Hastings District Council
20/09/2022

Basis of Appraisal

The following is a summary of the technical investigations carried out:

Other Investigations

20.1 Weathertightness, structural and durability opinions have been provided by BRANZ technical experts.

20.2 The manufacturer's Technical Literature has been examined by BRANZ and found to be satisfactory.

20.3 Site inspections have been undertaken by BRANZ to assess the practicability of installation.

20.4 The long-term performance of Ross Roof Group Roofing Systems in New Zealand and many countries overseas, along with the durability and non-hazardous nature of the materials used has been noted. The overseas and New Zealand experience of the Ross Roof Group Roofing Systems form the basis of the durability opinion.

Quality

21.1 The manufacture of the Ross Roof Group Roofing Systems have been examined by BRANZ, and details regarding the quality and composition of the materials used were obtained by BRANZ and found to be satisfactory.

21.2 The quality management system of the Ross Roof Group Ltd, has been assessed and registered by Telarc as meeting the requirements of ISO 9001:2015.

21.3 The quality of the supply of materials and accessories is the responsibility of the Ross Roof Group Ltd.

21.4 Quality on site is the responsibility of the installer.

21.5 Designers are responsible for the building design, and the building contractor is responsible for the quality of installation of the roof framing and sheathing or roofing battens in accordance with the Technical Literature.

21.6 Building owners are responsible for the maintenance of the Ross Roof Group Roofing Systems in accordance with the instructions of the Ross Roof Group Ltd.

Sources of Information

- NZS 3604: 2011 Timber-framed buildings.
- Ministry of Business, Innovation and Employment Record of amendments - Acceptable Solutions, Verification Methods and handbooks.
- The Building Regulations 1992.

Readers are advised to check the validity of this Appraisal by referring to the Valid Appraisals listing on the BRANZ website, or by contacting BRANZ.

ABA20220988
APPROVED - Site Copy
Hastings District Council
20/09/2022

BRANZ

In the opinion of BRANZ, the Ross Roof Group Roofing Systems is fit for purpose and will comply with the Building Code to the extent specified in this Appraisal provided it is used, designed, installed and maintained as set out in this Appraisal.

The Appraisal is issued only to Ross Roof Group Ltd, and is valid until further notice, subject to the Conditions of Appraisal.

Conditions of Appraisal

1. This Appraisal:
   a) relates only to the product as described herein;
   b) must be read, considered and used in full together with the Technical Literature;
   c) does not address any Legislation, Regulations, Codes or Standards, not specifically named herein;
   d) is copyright of BRANZ.
2. Ross Roof Group Ltd:
   a) continues to have the product reviewed by BRANZ;
   b) shall notify BRANZ of any changes in product specification or quality assurance measures prior to the product being marketed;
   c) abides by the BRANZ Appraisals Services Terms and Conditions;
   d) warrants that the product and the manufacturing process for the product are maintained at or above the standards, levels and quality assessed and found satisfactory by BRANZ pursuant to BRANZ's Appraisal of the product.
3. BRANZ makes no representation or warranty as to:
   a) the nature of individual examples of, batches of, or individual installations of the product, including methods and workmanship;
   b) the presence or absence of any patent or similar rights subsisting in the product or any other product;
   c) any guarantee or warranty offered by Ross Roof Group Ltd.
4. Any reference in this Appraisal to any other publication shall be read as a reference to the version of the publication specified in this Appraisal.
5. BRANZ provides no certification, guarantee, indemnity or warranty, to Ross Roof Group Ltd or any third party.

For BRANZ

Chelydra Percy
Chief Executive
Date of Issue:
28 February 2020

Readers are advised to check the validity of this Appraisal by referring to the Valid Appraisals listing on the BRANZ website, or by contacting BRANZ.

ABA20220988
APPROVED - Site Copy
Hastings District Council
20/09/2022

BRANZ Appraised
Appraisal No. 447 [2020]

LINEA™ WEATHERBOARD CAVITY CLADDING



Appraisal No. 447 (2020)

This Appraisal replaces BRANZ Appraisal No. 447 (2010)

BRANZ Appraisals

Technical Assessments of products for building and construction.

James Hardie New Zealand Limited
PO Box 12 070
Penrose
Auckland
Tel: 0800 808 868
Fax: 0800 808 988
Web: www.jameshardie.co.nz

BRANZ
1222 Moonshine Rd,
RD1, Porirua 5381
Private Bag 50 908
Porirua 5240,
New Zealand
Tel: 04 237 1170
branz.co.nz

Product

1.1 Linea™ Weatherboard Cavity Cladding is a cavity-based bevel-back fibre cement weatherboard wall cladding. It is designed to be used as part of an external cladding system for residential and light commercial type buildings where domestic construction techniques are used.

1.2 Linea™ Weatherboard Cavity Cladding consists of Linea™ Weatherboard, which is a bevel-back fibre cement weatherboard, fixed over timber battens to form the cavity. The cladding is finished with a latex paint system.

Scope

2.1 Linea™ Weatherboard Cavity Cladding has been appraised as an external wall cladding for buildings within the following scope:

- the scope limitations of NZBC Acceptable Solution E2/AS1, Paragraph 1.1; and,
- constructed with timber framing complying with the NZBC; and,
- with a risk score of 0-20, calculated in accordance with NZBC Acceptable Solution E2/AS1, Table 2; and,
- situated in NZS 3604 Wind Zones up to, and including, Extra High.

2.2 Linea Weatherboard Cavity Cladding has also been appraised for weathertightness and structural wind loading when used as an external horizontally fixed wall cladding solution for buildings within the following scope:

- the scope limitations of NZBC Acceptable Solution E2/AS1, Paragraph 1.1 with regards to building height and floor plan area; and,
- constructed with timber framing complying with the NZBC; and,
- situated in specific design wind pressures up to a maximum design differential ultimate limit state [ULS] of 2.5 kPa.

2.3 Linea™ Weatherboard must only be installed horizontally on vertical surfaces.

2.4 Linea™ Weatherboard Cavity Cladding is appraised for use with aluminium window and door joinery that is installed with vertical jambs and horizontal heads and sills. *[Note: The Appraisal of Linea™ Weatherboard Cavity Cladding relies on the joinery meeting the requirements of NZS 4211 for the relevant Wind Zone.]*

[Note: Linea™ Weatherboard Cavity Cladding can be used to provide fire resistance rated construction, but these aspects have not been assessed by this Appraisal and are outside its scope.]

Readers are advised to check the validity of this Appraisal by referring to the Valid Appraisals listing on the BRANZ website, or by contacting BRANZ.

ABA20220988
APPROVED - Site Copy
Hastings District Council
20/09/2022

Building Regulations

New Zealand Building Code (NZBC)

3.1 **In the opinion of BRANZ, Linea™ Weatherboard Cavity Cladding if designed, used, installed and maintained in accordance with the statements and conditions of this Appraisal, will meet the following provisions of the NZBC:**

Clause B1 STRUCTURE: Performance B1.3.1, B1.3.2 and B1.3.4. Linea™ Weatherboard Cavity Cladding meets the requirements for loads arising from self-weight, earthquake, wind, impact and creep [i.e. B1.3.3 (a), (f), (h), (j) and (q)]. See Paragraphs 9.1-9.3.

Clause B2 DURABILITY: Performance B2.3.1 (b), 15 years and B2.3.2. Linea™ Weatherboard Cavity Cladding meets these requirements. See Paragraphs 10.1-10.3.

Clause E2 EXTERNAL MOISTURE: Performance E2.3.2. Linea™ Weatherboard Cavity Cladding meets this requirement. See Paragraphs 14.1-14.5.

Clause F2 HAZARDOUS BUILDING MATERIALS: Performance F2.3.1. Linea™ Weatherboard Cavity Cladding meets this requirement and will not present a health hazard to people.

Technical Specification

4.1 System components and accessories for Linea™ Weatherboard Cavity Cladding supplied by James Hardie New Zealand Limited are:

- **Linea™ Weatherboards** are bevel-back weatherboards with a tongue and groove at each end for jointing. The weatherboards are pre-primed with an acrylic primer on the front face and both edges. Linea™ Weatherboards are 16 mm thick and are available 135 mm, 150 mm and 180 mm wide. All boards are supplied 4,200 mm long. Linea™ Weatherboards are manufactured from a reduced density cellulose fibre cement formulation. The boards are formed, cut to length and then cured by high-pressure autoclaving. After autoclaving, a bevel is cut on the back face of the weatherboards, the front edge at the bottom of the board is chamfered and the ends are tongue and grooved for jointing. Linea™ Weatherboards are manufactured to meet the requirements of AS/NZS 2908.2.

Accessories

- **Axent™ Trim** - a 16 mm thick fibre cement trim manufactured from a reduced density cellulose fibre cement formulation. Axent™ Trim is pre-primed with an acrylic primer on the front face and both edges, and is available in sizes of 84 mm and 100 mm wide by 2,600 mm long.
- **External and internal corner mouldings** - chromate treated aluminium external box corner, 90° internal corner 'W' mould and 135° internal corner 'W' mould. The mouldings are available in 2,700 mm and 4,000 mm lengths.
- **Corner soakers** - 90° soakers are available for 135 mm, 150 mm and 180 mm Linea™ Weatherboards. The soakers are available in chromate treated aluminium, copper and stainless steel.
- **Cavity vent strip** - uPVC, available in 3,000 mm lengths.
- **Rigid wall underlay** – HomeRAB™ Pre-Cladding, RAB™ Board, plywood or fibre cement sheet complying with NZBC Acceptable Solution E2/AS1, Table 23, or rigid sheathing covered by a valid BRANZ Appraisal for use as rigid air barrier systems.

4.2 System components and accessories used with Linea™ Weatherboard Cavity Cladding which are supplied by the building contractor are:

- **Flexible wall underlay** – building paper complying with NZBC Acceptable Solution E2/AS1 Table 23, or breather-type membranes covered by a valid BRANZ Appraisal for use as wall underlays.
- **Flexible building underlay support** – polypropylene strap at 300 mm centres fixed horizontally and drawn taut, 75 mm galvanised mesh, galvanised wire, or additional vertical battens for securing the flexible building underlay in place and preventing bulging of the bulk insulation into the drainage cavity. *[Note: Mesh and wire galvanising must comply with AS/NZS 4534. Additional vertical battens may also be installed to provide support.]*

Readers are advised to check the validity of this Appraisal by referring to the Valid Appraisals listing on the BRANZ website, or by contacting BRANZ.

ABA20220988
APPROVED - Site Copy
Hastings District Council
20/09/2022

- **Flexible sill, head and jamb flashing tape** - flexible flashing tapes complying with NZBC Acceptable Solution E2/AS1, Paragraph 4.3.11, or flexible flashing tapes covered by a valid BRANZ Appraisal for use around window and door joinery openings.
- **Cavity battens** - nominal 50 mm wide by 25 mm thick (minimum finished size of 45 mm wide by 18 mm thick) timber treated to Hazard Class H3.1.
- **Joinery head flashings** - folded from aluminium or galvanised steel to suit the window or door trim opening. Refer to NZS 3604, Section 4 and NZBC Acceptable Solution E2/AS1, Table 20 for durability requirements.
- **Planted sill and scribers** - timber treated to Hazard Class H3.1, pre-primed before installation.
- **Window and door trim cavity air seal** - air seals complying with NZBC Acceptable Solution E2/AS1, Paragraph 9.1.6, or self-expanding, moisture cure polyurethane foam air seals covered by a valid BRANZ Appraisal suitable for use around window, door and other wall penetration openings.
- **Flexible sealant** - sealant complying with NZBC Acceptable Solution E2/AS1, or sealant covered by a valid BRANZ Appraisal for use as a weather sealing sealant for exterior use.
- **Cavity batten fixings** - 40 x 2.8 mm flathead hot-dip galvanised nails.
- **Linea™ Weatherboard fixings** - 60 x 3.15 mm flathead hot-dip galvanised HardieFlex nails or stainless steel ring shank HardieFlex nails (for concealed nailing in NZS 3604 Wind Zones up to, and including, Very High), 75 x 3.15 mm jolthead hot-dip galvanised nails or stainless steel ring shank nails (for face nailing in NZS 3604 Wind Zones up to, and including, Very High), and 90 x 3.55 mm jolthead hot-dip galvanised nails or stainless steel ring shank nails (for face nailing in the NZS 3604 Extra High Wind Zone and specific design wind pressures up to a maximum design differential ULS of 2.5 kPa).

(Note: Stainless steel fixings must be Grade 316 and hot-dip galvanising must comply with AS/NZS 4680).

- **Axent™ Trim fixings** - 60 x 3.15 mm or 75 x 3.15 mm hot-dip galvanised jolthead nails and stainless steel ring shank jolthead nails.
- **Aluminium joinery head flashing** - as supplied by the joinery manufacturer or the contractor.
- **Flashings** - balustrade and parapet cap flashings, and inter-storey joint flashings. Refer to NZS 3604 Section 4, and NZBC Acceptable Solution E2/AS1, Table 20 for durability requirements.

Paint System Specification

4.3 Paint systems are not supplied by James Hardie New Zealand Limited and have not been assessed, therefore they are outside the scope of this Appraisal.

4.4 All exposed faces, including top edges at sills and all bottom edges of Linea™ Weatherboard, Axent™ Trim and accessories must be finished with at least 2 coats of an exterior grade latex acrylic paint system complying with any of Parts 7, 8, 9, or 10 of AS 3730.

Handling and Storage

5.1 Handling and storage of all materials supplied by James Hardie New Zealand Limited or the building contractor, whether on-site or off-site, is under the control of the building contractor. Linea™ Weatherboards must be stacked flat, off the ground and supported on a level platform. They must be kept dry at all times either by storing under cover or providing waterproof covers to the stack. Care must be taken to avoid damage to edges, ends and surfaces. Weatherboards must always be carried on edge.

5.2 Accessories must be stored so they are kept clean, dry and undamaged. All accessories must be used within the maximum storage period recommended by the manufacturer.

Technical Literature

6.1 Refer to the Appraisals listing on the BRANZ website for details of the current Technical Literature for Linea™ Weatherboard Cavity Cladding. The Technical Literature must be read in conjunction with this Appraisal. All aspects of design, use, installation and maintenance contained in the Technical Literature and within the scope of this Appraisal must be followed.

Readers are advised to check the validity of this Appraisal by referring to the Valid Appraisals listing on the BRANZ website, or by contacting BRANZ.

ABA20220988
APPROVED - Site Copy
Hastings District Council
20/09/2022

Design Information

Framing

Timber Treatment

7.1 Timber wall framing behind Linea™ Weatherboard Cavity Cladding must be treated as required by NZBC Acceptable Solution B2/AS1.

Timber Framing

7.2 Timber framing must comply with NZS 3604 for buildings or parts of a building within the scope limitations of NZS 3604. Buildings or parts of a building outside the scope of NZS 3604 must be to a specific design in accordance with NZS 3603 and AS/NZS 1170. Where specific design is required, the framing must be of at least equivalent stiffness to the framing provisions of NZS 3604. Studs must be at maximum 600 mm centres in Low, Medium, High and Very High Wind Zones and maximum 400 mm centres for the NZS 3604 Extra High Wind Zone and specifically designed buildings. Nogs must be fitted flush between the studs at maximum 800 mm centres (for studs at 600 mm centres) when a flexible wrap is used. The nogs may be omitted when a rigid air barrier is used.

7.3 Timber framing must have a maximum moisture content of 20% at the time of the cladding application. *(Note: If weatherboards are fixed to framing with a moisture content of greater than 20%, problems may occur at a later date due to excessive timber shrinkage.)*

General

8.1 When Linea™ Weatherboard Cavity Cladding is used for specifically designed buildings up to 2.5 kPa ULS wind pressure, only the weathertightness and structural aspects of the cladding are within the scope of this Appraisal. All other aspects of the building need to be specifically designed and are outside the scope of this Appraisal.

8.2 Punchings in the cavity vent strip provide a minimum ventilation opening area of 1,000 mm^2 per lineal metre of wall in accordance with NZBC Acceptable Solution E2/AS1, Paragraph 9.1.8.3 b).

8.3 At ground level, the bottom edge of Linea™ Weatherboards must be kept clear of paved surfaces, such as footpaths, by a minimum of 100 mm and unpaved surfaces by 175 mm in accordance with NZBC Acceptable Solution E2/AS1, Table 18. The ground clearances to finished floor levels as set out in NZS 3604 must be adhered to.

8.4 At balcony, deck or low pitch roof/wall junctions, the bottom edge of Linea™ Weatherboards must be kept clear of any adjacent surface, or above the top surface of any adjacent roof flashing by a minimum of 50 mm.

8.5 All external walls of buildings must have barriers to airflow in the form of interior linings with all joints stopped for Wind Zones up to, and including, Very High, a rigid underlay must be used for buildings in the Extra High Wind Zone and SED buildings up to 2.5 kPa design differential ULS wind pressure. Unlined gables and unlined walls must incorporate a rigid sheathing or an air barrier which meets the requirements of NZBC Acceptable Solution E2/AS1, Table 23. For attached garages, wall underlays must be selected in accordance with NZBC Acceptable Solution E2/AS1, Paragraph 9.1.3.4. Where rigid underlays are used, the cavity batten fixing lengths must be increased by a minimum of the thickness of the underlay.

8.6 Where Linea™ Weatherboard Cavity Cladding abuts other cladding systems, designers must detail the junction to meet their own requirements and the performance requirements of the NZBC. Details not included within the Technical Literature have not been assessed and are outside the scope of this Appraisal.

Inter-storey Junctions

8.7 Inter-storey drained joints must be constructed in accordance with the Technical Literature. Inter-storey drained joints must be provided to limit continuous cavities to the lesser of 2-storeys or 7 m in height, in accordance with the requirements of NZBC Acceptable Solution E2/AS1, Paragraph 9.1.9.4 b).

Readers are advised to check the validity of this Appraisal by referring to the Valid Appraisals listing on the BRANZ website, or by contacting BRANZ.

ABA20220988
APPROVED - Site Copy
Hastings District Council
20/09/2022

Structure

Mass

9.1 The mass of the 135 mm wide Linea™ Weatherboard when installed on the wall is 25.7 kg/m^2 at equilibrium moisture content (EMC). The mass of the 150 mm wide board is 24.93 kg/m^2 at EMC and the mass of the 180 mm wide board is 23.92 kg/m^2 at EMC. Linea™ Weatherboard Cavity Cladding is therefore considered a light wall cladding in terms of NZS 3604.

Impact Resistance

9.2 Linea™ Weatherboard Cavity Cladding will resist impacts likely to be encountered in normal residential use. The likelihood of impact damage to the cladding when used in light commercial situations should be considered at the design stage, and appropriate protection such as the installation of bollards and barriers provided for vulnerable areas.

Wind Zones

9.3 Linea™ Weatherboard Cavity Cladding is suitable for use in all Wind Zones of NZS 3604 up to, and including, Extra High where buildings are designed to meet the requirements of NZBC Acceptable Solution E2/AS1, Paragraph 1.1, or up to 2.5 kPa ULS wind pressure where buildings are specifically designed.

Durability

Serviceable Life

10.1 Linea™ Weatherboard Cavity Cladding installations are expected to have a serviceable life of at least 50 years provided the paint coating system is maintained in accordance with this Appraisal to ensure the Linea™ Weatherboards and fixings remain dry in service. Linea™ Weatherboards must be painted within 3 months of fixing.

10.2 Coastal locations can be very corrosive to fasteners, especially locations within distances of up to 500 m from the sea including harbours, or 100 metres from tidal estuaries and sheltered inlets, and otherwise as shown in NZS 3604, Figure 4.2. These coastal locations are defined in NZS 3604 as Zone D. To achieve a 50 year serviceable life in Zone D, Linea™ Weatherboards must be fixed with stainless steel fasteners. Fasteners outside Zone D may be hot-dip galvanised steel.

10.3 Microclimatic conditions, including geothermal hot spots, industrial contamination and corrosive atmospheres, and contamination from agricultural chemicals or fertilisers can convert mildly corrosive atmosphere into aggressive environments for fasteners. The fixing of Linea™ Weatherboards in areas subject to microclimatic conditions requires specific design in accordance with NZS 3604, Paragraph 4.2.4, and is outside the scope of this Appraisal.

Maintenance

11.1 Regular maintenance is essential for Linea™ Weatherboard Cavity Cladding installations to continue to meet the NZBC durability performance provision and to maximise their serviceable life.

11.2 Annual inspections must be made to ensure that all aspects of the cladding system, including the paint coating system, flashings and any sealed joints remain in a weatherproof condition. Any damaged areas or areas showing signs of deterioration which would allow water ingress must be repaired immediately. Sealant and paint coatings must be repaired in accordance with the sealant or paint coating manufacturer's instructions.

11.3 Regular cleaning (at least annually) of the paint coating surface is recommended to remove grime, dirt and organic growth and to maximise the life and appearance of the coating. Paint systems must be re-coated at approximately 7-15 yearly intervals in accordance with the paint manufacturer's instructions.

11.4 Minimum ground clearances as set out in this Appraisal must be maintained at all times during the life of the cladding. *(Note: Failure to adhere to the minimum ground clearances given in this Appraisal and the Technical Literature will adversely affect the long term durability of Linea™ Weatherboard Cavity Cladding.)*

Readers are advised to check the validity of this Appraisal by referring to the Valid Appraisals listing on the BRANZ website, or by contacting BRANZ.

ABA20220988
APPROVED - Site Copy
Hastings District Council
20/09/2022

Fire Affecting Areas Beyond the Fire Source

Vertical Fire Spread

12.1 This Appraisal only covers buildings 10 m or less in height. NZBC Functional Requirement C3.2 identifies that external vertical fire spread to upper floors only needs be considered for buildings with a building height greater than 10 m. Control of external vertical fire spread is therefore outside the scope of this Appraisal.

Horizontal Fire Spread

12.2 Linea™ Weatherboards have a peak heat release rate of less than 100 kw/m^2 and a total heat released of less than 25 MJ/m^2. Testing was carried out as per Paragraph 5.4 of NZBC Acceptable Solution C/AS1 and Paragraph 5.8.1 of NZBC Acceptable Solution C/AS2, achieving a Type A performance. Linea™ Weatherboards can therefore be used within 1 m of the relevant boundary.

12.3 Refer to NZBC Acceptable Solutions C/AS1 and C/AS2 and Verification Method C/VM2 for fire resistance rating and control of external fire spread requirements for external walls.

Prevention of Fire Occurring

13.1 Separation or protection must be provided to the Linea™ Weatherboards from heat sources such as fireplaces, heating appliances and chimneys. Part 7 of NZBC Acceptable Solution C/AS1 and C/AS2, and NZBC Verification Method C/VM1 provide methods for separation and protection of combustible materials from heat sources.

External Moisture

14.1 Linea™ Weatherboard Cavity Cladding, when installed in accordance with this Appraisal and the Technical Literature will prevent the penetration of moisture that could cause undue dampness or damage to building elements.

14.2 The cavity must be sealed off from the roof and sub-floor space to meet code compliance with NZBC Clause E2.3.5.

14.3 Linea™ Weatherboard Cavity Cladding allows excess moisture present at the completion of construction to be dissipated without permanent damage to building elements to meet code compliance with NZBC Clause E2.3.6.

14.4 The details given in the Technical Literature for weather sealing are based on the design principle of having a first and second line of defence against moisture entry for all joints, penetrations and junctions. The ingress of moisture must be excluded by detailing joinery and wall interfaces as shown in the Technical Literature. Weathertightness details that are developed by the designer are outside the scope of this Appraisal and are the responsibility of the designer for compliance with the NZBC.

14.5 The use of Linea™ Weatherboard Cavity Cladding where there is a designed cavity drainage path for moisture that penetrates the cladding, does not reduce the requirement for junctions, penetrations, etc to remain weather resistant.

Internal Moisture

15.1 Buildings must be constructed with an adequate combination of thermal resistance and ventilation, and space temperature must be provided to all habitable spaces, bathrooms, laundries and other spaces where moisture may be generated or may accumulate.

Water Vapour

15.2 Linea™ Weatherboard Cavity Cladding is not a barrier to the passage of water vapour, and when installed in accordance with the Technical Literature and this Appraisal will not create or increase the risk of moisture damage resulting from condensation.

Readers are advised to check the validity of this Appraisal by referring to the Valid Appraisals listing on the BRANZ website, or by contacting BRANZ.

ABA20220988
APPROVED - Site Copy
Hastings District Council
20/09/2022

Installation Information

Installation Skill Level Requirements

16.1 All design and building work must be carried out in accordance with the Linea™ Weatherboard Cavity Cladding Technical Literature and this Appraisal by competent and experienced tradespersons conversant with the cladding system. Where the work involves Restricted Building Work (RBW) this must be completed by, or under the supervision of, a Licensed Building Practitioner (LBP) with the relevant Licence class.

System Installation

Building Underlay and Flexible Sill and Jamb Tape Installation

17.1 The selected building underlay and flexible sill and jamb tape system must be installed by the building contractor in accordance with the underlay and tape manufacturer's instructions prior to the installation of the cavity battens and the rest of the Linea™ Weatherboard Cavity Cladding system. Flexible building underlay must be installed horizontally and be continuous around corners. Underlay must be lapped 75 mm minimum at horizontal joints and 150 mm minimum over studs at vertical joints. Generic rigid sheathing materials must be installed in accordance with NZBC Acceptable Solution E2/AS1 and be overlaid with a flexible wall underlay. Proprietary systems shall be installed in accordance with the manufacturer's instructions. Particular attention must be paid to the installation of the building underlay and sill and jamb tapes around window and door openings to ensure a continuous seal is achieved and all exposed wall framing in the opening is protected.

Cavity Battens

17.2 Cavity battens must be installed over the building underlay to the wall framing at maximum 600 mm centres where the studs are at 600 mm centres or at 400 mm centres when studs are at 400 mm centres. The battens must be fixed in place with 40 x 2.8 mm hot-dip galvanised flathead nails at maximum 800 mm centres.

17.3 Where studs are at greater than 400 mm centres, a building underlay support must be installed over the building underlay between the cavity battens at maximum 300 mm centres.

Linea™ Weatherboard Installation

17.4 Linea™ Weatherboards may be cut on-site by power saw. Holes and cut-outs may be formed by drilling a number of holes around the perimeter of the opening required and tapping out the centre with a hammer, or by using a hole saw.

17.5 Linea™ Weatherboards must be dry prior to installation. Before the weatherboards are installed, cut ends exposed to the exterior such as at aluminium box corners or internal corners must be sealed with an acrylic sealer to reduce the absorbency of the fibre cement.

17.6 Linea™ Weatherboards must be installed starting at the bottom of the wall. A cant strip (H3.1 treated timber or fibre cement) must be fixed behind the bottom course of weatherboards to ensure the weatherboards are set at the correct angle. The cant strip must be continuous around the perimeter of the building. The bottom course of weatherboards must overhang the bottom plate by a minimum of 50 mm.

17.7 Before the weatherboards are installed, the corner detail must be prepared to suit the selected option, e.g. external box corner, corner soaker. The necessary flashings, including window flashings, must be installed before commencing weatherboard fixing.

17.8 The first course of weatherboards must be full length, i.e. 4,200 mm and commence from an external corner. Jointing of Linea™ Weatherboards is made off the stud using the pre-cut tongue and groove joint. Tongue and groove joints may be located centrally between the studs, but must be no closer than 100 mm to the edge of a stud. A bead of sealant must be applied to the front side of the tongue before the corresponding board is inserted. Subsequent courses of weatherboards must be installed so that the tongue and groove joints are staggered by 600 mm minimum from joints in the previous course.

Readers are advised to check the validity of this Appraisal by referring to the Valid Appraisals listing on the BRANZ website, or by contacting BRANZ.

ABA20220988
APPROVED - Site Copy
Hastings District Council
20/09/2022

17.9 Linea™ Weatherboards must have a minimum lap of 30 mm, and should be set out so as near to a full board as possible will finish under and over windows and doors and at the top of the wall. A storey rod can be used to accurately position weatherboard courses.

17.10 Linea™ Weatherboards must be fixed to each stud using concealed fixings behind the lap of the boards or face nailing, except that face nailing must be provided at all corners and vertical edges of openings.

17.11 Concealed fixing must be carried out using 60 x 2.8 mm hot-dip galvanised or stainless steel Hardieflex nails depending on the location, see Paragraph 10.2. Nails must be fixed 25 mm from the top edge of the board and must be driven flush with the board surface.

17.12 Face nailing must be carried out using 75 x 3.15 mm hot-dip galvanised or stainless steel jolthead nails in NZS 3604 Wind Zones up to, and including, Very High, or 90 x 4.0 mm hot-dip galvanised or stainless steel jolthead nails in the NZS 3604 Extra High Wind Zone and specific design wind pressures up to a maximum design differential ULS of 2.5 kPa, depending on the location, see Paragraph 10.2. Nails must be fixed 15 mm up from the bottom of the board and punched a maximum of 2 mm below the surface of the board. The top board must be pre-drilled for fixing.

17.13 Linea™ Weatherboards can be hand or gun nailed. Nails must not be closer than 25 mm to the end of the board when hand nailing, or closer than 50 mm when gun nailing. *(Note: Gun nailing must only be used for concealed nailing.)*

Aluminium Joinery Installation

17.14 Aluminium joinery and associated head and sill (for direct fixed) flashings must be installed by the building contractor in accordance with the Technical Literature. An 8 mm nominal gap must be left between the joinery reveal and the wall framing so a PEF rod and air seal can be installed after the joinery has been secured in place.

17.15 After installing the window and door joinery, Axent™ Trim, planted sills and scribers may be installed in accordance with the Technical Literature to provide additional weatherproofing for the joinery/weatherboard junction.

Inspections

17.16 The Technical Literature must be referred to during the inspection of Linea™ Weatherboard Cavity Cladding installations.

Finishing

17.17 The paint coating manufacturer's instructions must be followed at all times for application of the paint finish. Linea™ Weatherboards and trim must be clean and dry before commencing painting.

Health and Safety

18.1 Cutting of Linea™ Weatherboards must be carried out in well ventilated areas, and a dust mask and eye protection must be worn.

18.2 When power tools are used for cutting, grinding or forming holes, health and safety measures as set out in the Technical Literature must be observed because of the amount of dust generated.

18.3 Safe use and handling procedures for Linea™ Weatherboards and the components that make up the cladding system are provided in the relevant manufacturer's Technical Literature.

Readers are advised to check the validity of this Appraisal by referring to the Valid Appraisals listing on the BRANZ website, or by contacting BRANZ.

ABA20220988
APPROVED - Site Copy
Hastings District Council
20/09/2022

Basis of Appraisal

The following is a summary of the technical investigations carried out:

Tests

19.1 The following testing has been completed by BRANZ:

- BRANZ expert opinion on NZBC E2 code compliance for Linea™ Weatherboard Cavity Cladding was based on testing and evaluation of all details within the scope and as stated within this Appraisal. Linea™ Weatherboard Cavity Cladding was tested to E2/VM1 (as contained within NZBC Clause E2, Third Edition, Amendment 5).
- Uniform wind face load tests to simulate wind pressures on 12 mm thick Linea™ Weatherboards were carried out by BRANZ, and the results were used in assessing 16 mm thick Linea™ Weatherboard used in Linea™ Weatherboard Cavity Cladding.
- Cone calorimeter testing to determine the peak rate of heat release and total heat release of Linea™ Weatherboard was completed by BRANZ. The testing was carried out in accordance with AS/NZS 3837.

19.2 Linea™ Weatherboards have been tested by a National Association of Testing Authorities (NATA) accredited laboratory in accordance with AS/NZS 2908.2. The results have been reviewed by BRANZ and found to be satisfactory.

19.3 Testing has been carried out by James Hardie New Zealand Limited to determine the modulus of rupture and inter-laminar bond strength of carbonated and non-carbonated Linea™ Weatherboard. The test methods and results have been reviewed by BRANZ and found to be satisfactory.

Other Investigations

20.1 Weathertightness, structural, fire and durability opinions have been provided by BRANZ technical experts.

20.2 Site inspections have been carried out by BRANZ to assess the practicability of installation, and to examine completed installations.

20.3 The manufacturer's Technical Literature has been examined by BRANZ and found to be satisfactory.

Quality

21.1 The manufacture of Linea™ Weatherboards has been examined by BRANZ, and details regarding the quality and composition of the materials used were obtained by BRANZ and found to be satisfactory.

21.2 The quality of materials, components and accessories supplied by James Hardie New Zealand Limited is the responsibility of James Hardie New Zealand Limited. The quality control system of James Hardie New Zealand Limited has been assessed and registered as meeting the requirements of ISO 9001: 2015.

21.3 Quality on site is the responsibility of the installer.

21.4 Designers are responsible for the building design, and building contractors are responsible for the quality of installation of the building underlay, cavity battens, Linea™ Weatherboard and accessories in accordance with the instructions of James Hardie New Zealand Limited.

21.5 Building owners are responsible for the maintenance of Linea™ Weatherboard Cavity Cladding in accordance with the instructions of James Hardie New Zealand Limited.

Readers are advised to check the validity of this Appraisal by referring to the Valid Appraisals listing on the BRANZ website, or by contacting BRANZ.

ABA20220988
APPROVED - Site Copy
Hastings District Council
20/09/2022

Sources of Information

- AS 3730 Guide to the properties of paints for buildings.
- AS/NZS 1170: 2002 Structural design actions.
- AS/NZS 2908.2: 2000 Cellulose-cement products - Flat sheet.
- AS/NZS 3837: 1998 Method of test for heat and smoke release rates for materials and products using an oxygen consumption calorimeter.
- AS/NZS 4534: 1998 Zinc and zinc/aluminium-alloy coatings on steel wire.
- AS/NZS 4680: 2006 Hot-dip galvanized (zinc) coatings on fabricated ferrous articles.
- NZS 3602: 2003 Timber and wood-based products for use in building.
- NZS 3603: 1993 Timber Structures Standard.
- NZS 3604: 1999 Timber framed buildings.
- NZS 4211: 2008 Specification for performance of windows.
- Ministry of Business, Innovation and Employment Record of amendments - Acceptable Solutions, Verification Methods and handbooks.
- The Building Regulations 1992.

Readers are advised to check the validity of this Appraisal by referring to the Valid Appraisals listing on the BRANZ website, or by contacting BRANZ.

ABA20220988
APPROVED - Site Copy
Hastings District Council
20/09/2022

BRANZ

In the opinion of BRANZ, Linea™ Weatherboard Cavity Cladding is fit for purpose and will comply with the Building Code to the extent specified in this Appraisal provided it is used, designed, installed and maintained as set out in this Appraisal.

The Appraisal is issued only to James Hardie New Zealand Limited, and is valid until further notice, subject to the Conditions of Appraisal.

Conditions of Appraisal

1. This Appraisal:
   a) relates only to the product as described herein;
   b) must be read, considered and used in full together with the Technical Literature;
   c) does not address any Legislation, Regulations, Codes or Standards, not specifically named herein;
   d) is copyright of BRANZ.
2. James Hardie New Zealand Limited:
   a) continues to have the product reviewed by BRANZ;
   b) shall notify BRANZ of any changes in product specification or quality assurance measures prior to the product being marketed;
   c) abides by the BRANZ Appraisals Services Terms and Conditions;
   d) warrants that the product and the manufacturing process for the product are maintained at or above the standards, levels and quality assessed and found satisfactory by BRANZ pursuant to BRANZ's Appraisal of the product.
3. BRANZ makes no representation or warranty as to:
   a) the nature of individual examples of, batches of, or individual installations of the product, including methods and workmanship;
   b) the presence or absence of any patent or similar rights subsisting in the product or any other product;
   c) any guarantee or warranty offered by James Hardie New Zealand Limited.
4. Any reference in this Appraisal to any other publication shall be read as a reference to the version of the publication specified in this Appraisal.
5. BRANZ provides no certification, guarantee, indemnity or warranty, to James Hardie New Zealand Limited or any third party.

For BRANZ

Chelydra Percy
Chief Executive

Date of Issue:
02 September 2020

Readers are advised to check the validity of this Appraisal by referring to the Valid Appraisals listing on the BRANZ website, or by contacting BRANZ.

ABA20220988
APPROVED - Site Copy
Hastings District Council
20/09/2022

BRANZ Appraised
Appraisal No. 427 [2021]

GIB® WET AREA SYSTEMS

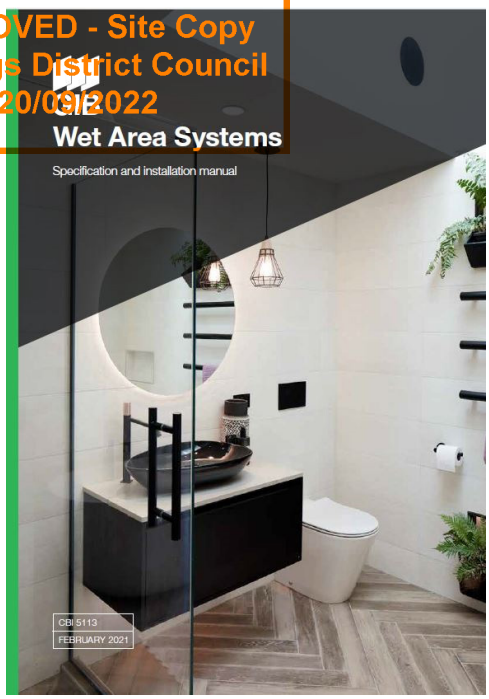

Appraisal No. 427 (2021)

This Appraisal replaces BRANZ Appraisal No. 427 (2007)

BRANZ Appraisals

Technical Assessments of products for building and construction.

Winstone Wallboards Ltd
PO Box 12 256
Penrose
Auckland 1642
Tel: 09 633 0100
Email: info@gib.co.nz
Web: www.gib.co.nz

BRANZ
1222 Moonshine Rd,
RD1, Porirua 5381
Private Bag 50 908
Porirua 5240,
New Zealand
Tel: 04 237 1170
branz.co.nz

Product

1.1 GIB® Wet Area Systems are for the interior lining of timber and steel-framed walls and ceilings in wet areas such as bathrooms, laundries, kitchens and toilets where a water-resistant lining material is desirable.

Scope

2.1 GIB® Wet Area Systems have been appraised for use as a wet area wall and ceiling lining in buildings within the following scope:

- on timber-framed walls and ceilings within the scope limitations on NZS 3604; or,
- on steel-framed walls and ceilings within the scope limitations of NASH Standard Part 2, or,
- on timber and light gauge steel-framed walls and ceilings subject to specific design.

Building Regulations

New Zealand Building Code (NZBC)

3.1 **In the opinion of BRANZ, GIB® Wet Area Systems, if designed, used, installed and maintained in accordance with the statements and conditions of this Appraisal, will meet or contribute to meeting the following provisions of the NZBC:**

Clause B1 STRUCTURE: Performance B1.3.1, B1.3.2 and B1.3.4. GIB® Wet Area Systems meet the requirements for loads arising from self-weight and impact [i.e. B1.3.3 (a) and (j)]. See Paragraphs 8.1-8.3.

Clause B2 DURABILITY: Performance B2.3.1 (b) 15 years and B2.3.1 (c) 5 years. GIB® Wet Area Systems meet these requirements. See Paragraphs 9.1-9.5.

Clause E3 INTERNAL MOISTURE: Performance E3.3.4 and E3.3.5. GIB® Wet Area Systems meet these requirements. See Paragraphs 12.1-12.3.

Clause F2 HAZARDOUS BUILDING MATERIALS: Performance F2.3.1. GIB® Wet Area Systems meet this requirement.

Readers are advised to check the validity of this Appraisal by referring to the Valid Appraisals listing on the BRANZ website, or by contacting BRANZ.

ABA20220988
APPROVED - Site Copy
Hastings District Council
20/09/2022

Technical Specification

4.1 The GIB® plasterboards and accessories used in GIB® Wet Area Systems, and supplied by Winstone Wallboards Ltd are as follows:

GIB® Plasterboards

- **GIB Aqualine®** is a paper-bound, modified water-resistant gypsum-plaster core sheet lining material. It is available in 10 and 13 mm sheet thicknesses. Sheets are available in various edge profiles and lengths from 2,400 mm to 4,800 mm. Refer to Table 1. The nominal sheet weights are 8 kg/m² and 11 kg/m² for 10 mm and 13 mm thick sheets respectively. GIB Aqualine® face paper is green in colour.
- **GIB Toughline® Aqua** is a paper-bound, modified water-resistant gypsum-plaster core sheet lining material. It is available in a sheet thickness of 13 mm. Sheets are available in various edge profiles and lengths from 2,400 mm to 3,000 mm. Refer to Table 1. The nominal sheet weight is 11.4 kg/m². GIB Toughline® Aqua face paper is mauve in colour.
- **GIB Weatherline®** is an exterior-grade, glass-fibre fleece-wrapped modified-gypsum core sheet material. The product is available in 10 mm and 13 mm thicknesses and a board width of 1,200 mm. Standard sheet lengths are 2,450, 2,700 and 3,000 mm. Custom sheet lengths are also available. The nominal sheet weights are 9 kg/m² and 11.5 kg/m² for 10 mm and 13 mm thick sheets respectively.

Table 1: GIB® Wet Area Plasterboard Available Sheet Sizes

Plasterboard Type	Sheet Thickness (mm)	Sheet Edge Profile	Sheet Width (mm)	Sheet Length (mm)					
				2,400	2,450	2,700	3,000	3,600	4,800
GIB Aqualine®	10	TE/TE	1,200	✓		✓	✓	✓	
		TE/SE	1,200	✓					✓
		TE/SE	1,350	✓				✓	
	13	TE/TE	1,200	✓		✓	✓	✓	
GIB Toughline® Aqua	13	TE/TE	1,200	✓		✓	✓		
GIB Weatherline®	10	SE/SE	1,200		✓	✓	✓		
	13	SE/SE	1,200			✓	✓		

TE = Tapered Edge SE = Square Edge

Fastenings

- GIB® Grabber® High Thread Drywall screws for fixing to timber: 6 g x 25 mm and 32 mm.
- GIB® Grabber® Self Tapping Drywall screws for fixing to light gauge steel: 6 g x 25 mm and 32 mm.

Adhesive and Sealants

- GIBFix® One (Acrylic).
- GIBFix® All-Bond (Solvent).

GIB® Accessories

- Corner Support Angle - GIBFix® Angle or GIB® Rondo® NZ18. Minimum 32 x 32 x 0.55 mm galvanised metal angle.

GIB® Jointing Compounds

- As specified in the GIB® Wet Area Systems and GIB® Site Guide Technical Literature.

Readers are advised to check the validity of this Appraisal by referring to the Valid Appraisals listing on the BRANZ website, or by contacting BRANZ.

ABA20220988
APPROVED - Site Copy
Hastings District Council
20/09/2022

4.2 System components and accessories for the GIB® Wet Area Systems, which are supplied by the building contractor are:

Waterproofing

- A waterproofing system complying with AS/NZS 4858.

Finishes

- Finishes such as tiling, flexible sheet vinyl, paints and wallpapers have not been assessed and are outside the scope of this Appraisal.

Handling and Storage

5.1 The best results are achieved when GIB® plasterboards are treated as a finishing material and protected from damage. Sheets must be stacked flat and kept dry at all times. For limits on stack heights see the GIB® Site Guide. Sheets must be carried on edge and not dragged.

5.2 All accessories must be kept dry.

Technical Literature

6.1 Refer to the Appraisals listing on the BRANZ website for details of the current Technical Literature for GIB® Wet Area Systems. The Technical Literature must be read in conjunction with this Appraisal. All aspects of design, use, installation and maintenance contained in the Technical Literature and within the scope of this Appraisal must be followed.

Design Information

General

7.1 GIB® Wet Area Systems provide a water-resistant lining as a base for finishing systems in wet areas such as bathrooms, toilets, laundries and kitchens. The typical finishes are ceramic tiles and flexible sheet vinyl to walls, and paint and wallpaper to walls and ceilings. [*Note: GIB Weatherline® is a suitable substrate for ceramic tiles and sheet vinyl. For paint or wallpaper finishes use GIB Aqualine® or GIB Toughline® Aqua.]*

7.2 GIB® Wet Area Systems must not be used in the following situations:

- For bracing applications in shower areas or adjacent baths [See Paragraphs 7.4 and 8.2].
- In areas of high humidity [above 90% RH] or continually wet areas such as group showers, steam rooms, or swimming pools.
- Installed over a vapour barrier.
- Applied directly to masonry, concrete or solid plaster.
- Applied over other sheet lining materials.
- Used externally of the building envelope.
- Exposed to temperatures of 52°C or greater for prolonged periods. [Refer to appliance and fitting manufacturers for installation details.]

7.3 GIB Aqualine® may be substituted for some other GIB® plasterboard products in specific GIB® Bracing Systems, GIB® Fire Rated Systems and GIB® Noise Control Systems. Refer to the relevant systems technical literature for details.

Readers are advised to check the validity of this Appraisal by referring to the Valid Appraisals listing on the BRANZ website, or by contacting BRANZ.

ABA20220988
APPROVED - Site Copy
Hastings District Council
20/09/2022

Wet Areas

7.4 Wet areas are spaces where sanitary fixtures and sanitary appliances are located such as bathrooms, toilets, laundries and kitchens. There are two general categories of wet areas as follows:

- Water Splash – These are areas subject to intermittent splashing of water such as around baths, vanities, tubs and sinks.
- Shower Areas – These are areas subject to frequent and heavy water splash such as enclosed showers, unenclosed shower zones and showers over baths.

7.5 Both the above wet area categories must be finished with surfaces and joints that are impervious and easily cleaned. In addition, shower areas must be waterproofed. This can be achieved using proprietary rigid shower lining systems, flexible vinyl shower wall finishes, or tiling. Tiled shower areas must include a wet area waterproofing membrane system under the tiles.

Intertenancy Walls – Wet Areas

7.6 Intertenancy construction that incorporates fire resistance and noise control must be protected from water splash. In shower areas, GIB® Wet Area plasterboards must not be substituted for other GIB® plasterboards but must be an extra lining layer. Refer to the Technical Literature.

Tiling

7.7 GIB® Wet Area Systems are suitable as a substrate for tiling up to the following weights:

- 10 mm GIB Aqualine® and GIB Weatherline® - up to 26 kg/m^2.
- 13 mm GIB Aqualine®, GIB Toughline® Aqua and GIB Weatherline® - up to 40 kg/m^2.

[Note: Most ceramic and porcelain wall tiles weigh less than 20 kg/m^2. For further information on tiling consult the BRANZ Good Practice Guide – Tiling.]

Framing

7.8 Supporting framing must comprise one of the following, subject to the minimum sizes, dwang centres and all other frame requirements of GIB® Wet Area Systems Technical Literature:

- Timber framing must be designed and constructed in accordance with NZS 3604, or to a specific design using NZS 3603 and AS/NZS 1170. Refer to Paragraph 15.2 regarding recommended moisture content of timber framing.
- Steel framing must be designed and constructed in accordance with NASH Standard Part 2, or to a specific design in accordance with AS/NZS 1170.

Structure

Bracing

8.1 GIB Aqualine®, GIB Toughline® Aqua and GIB Weatherline®can be used in GIB EzyBrace® Systems. Refer to BRANZ Appraisals Nos. 928 [2016] and 1048 [2019].

8.2 GIB Wet Area Systems must not be used for bracing in shower areas or behind baths.

Impact Resistance

8.3 GIB® plasterboards provide adequate resistance to soft body impact, based upon experience of use in domestic and light commercial applications. GIB Toughline® Aqua is recommended by Winstone Wallboards Ltd where higher impact resistance is desired.

Readers are advised to check the validity of this Appraisal by referring to the Valid Appraisals listing on the BRANZ website, or by contacting BRANZ.

ABA20220988
APPROVED - Site Copy
Hastings District Council
20/09/2022

Durability

Serviceable Life

9.1 GIB® Wet Area Systems have a serviceable life of at least 15 years as a fully protected shower or water splash lining. As a general wall and ceiling lining, GIB® Wet Area Systems will have a serviceable life in excess of 50 years. The ability of GIB® plasterboards to remain durable is dependent on being protected and remaining dry in service, and being maintained in accordance with this Appraisal.

Maintenance

9.2 The building must be maintained weathertight and all lining systems protected from internal and external moisture.

9.3 Finishes to water splash and shower areas, including tiles, grout, waterproof membranes, sealants and flexible sheet vinyl must be checked to ensure the integrity of the system is maintained. They must be repaired or replaced if necessary. When repairing or replacing finishes, the GIB® plasterboard substrate must be checked for defects and repaired or replaced, as required.

9.4 For flexible sheet vinyl, particular attention must be paid to joints, especially at corners. Checks should be made to ensure the vinyl has not been punctured. Where damage has occurred, repairs must be made immediately.

9.5 Impact damage to GIB® plasterboard, resulting in small holes and cracks, may be patched, stopped and finished. For larger areas of damage, expert advice on repair must be sought from Winstone Wallboards Ltd.

Prevention of Fire Occurring

10.1 Separation or protection must be provided to the GIB® Wet Area Systems from heat sources such as fireplaces, heating appliances, flues and chimneys. Part 7 of NZBC Acceptable Solutions C/AS1 and C/AS2, and NZBC Verification Method C/VM1 provide methods for separation and protection of combustible materials from heat sources.

Fire Affecting Areas Beyond the Fire Source

Control of Internal Fire and Smoke Spread

11.1 The gypsum plasterboard used in GIB® Wet Area Systems without an applied paint or wallpaper finish has been tested in accordance with ISO 5660 and achieved a Material Group Number of 1-S.

11.2 The gypsum plasterboard used in GIB® Wet Area Systems with an untested applied finish of a waterborne or solvent borne paint coating ≤ 0.4mm thick achieves a Material Group Number of G2-S in accordance with Table A1 of NZBC Verification Method C/VM2.

11.3 A lower Material Group Number may be achieved when used with a tested finishing system. The Material Group Number for the complete lining system must be obtained from the supplier of the finish product or system.

Fire Resistance Ratings (FRRs)

11.4 GIB® Wet Area plasterboards, when used as part of GIB® Fire Rated Systems, can be used to provide FRRs as determined by NZBC Acceptable Solutions C/AS1 and C/AS2 and NZBC Verification Method C/VM2. Refer to BRANZ Appraisal No. 289 (2018) and relevant technical literature.

Internal Moisture

12.1 When installed in accordance with this Appraisal, GIB® Wet Area Systems will provide wall surfaces adjacent to sanitary fixtures and sanitary appliances that are impervious and easily cleaned.

12.2 The construction methods in the Technical Literature meet with the internal moisture requirements of the NZBC Acceptable Solution E3/AS1.

12.3 To minimise internal condensation, adequate levels of ventilation and thermal resistance must be provided to all spaces where moisture may be generated.

Readers are advised to check the validity of this Appraisal by referring to the Valid Appraisals listing on the BRANZ website, or by contacting BRANZ.

ABA20220988
APPROVED - Site Copy
Hastings District Council
20/09/2022

Airborne and Impact Sound

13.1 GIB® Wet Area plasterboards, when used as part of GIB® Noise Control systems, can be used to provide acoustic ratings as required by NZBC Acceptable Solution G6/AS1. Refer to BRANZ Appraisal No. 394 (2017) and relevant technical literature.

Installation Information

Installation Skill Level Requirement

14.1 Installation of GIB® Wet Area Systems must be completed by, or under the supervision of, a Licensed Building Practitioner with the relevant Licence Class, in accordance with the Technical Literature and this Appraisal.

General

15.1 GIB® Wet Area Systems must be installed in accordance with the Technical Literature. For inspection, reference must be made to the Technical Literature.

Framing

15.2 To achieve an acceptable decorative finish, the walls must not be lined unless the moisture content of timber framing is less than 18%. Winstone Wallboards Ltd recommend a moisture content of 8–12% where buildings are to be air conditioned or centrally heated.

Cutting

15.3 GIB® Wet Area plasterboards are easily cut by scoring the face paper with a sharp short-bladed trimming knife, and then snapping the plasterboard away from the cut face and cutting the back paper or by sawing. Use of a metal straightedge facilitates clean straight cuts. Cut edges can be tidied up by using a knife. Paper dags should be removed.

Fixing Sheets

Non-Tiled Areas

16.1 GIB® Wet Area plasterboards may be installed vertically or horizontally. Sheets are fixed with GIB® Grabber® screws at 300 mm centres around the perimeter of the sheet, and with GIBFix® adhesive on all intermediate studs and dwangs. Adhesive must not be used under fasteners. A 5-10 mm gap must be left between the floor and the bottom of the sheet.

Tiled Areas

16.2 Control joints must be provided at maximum 4 m centres.

16.3 Internal corners in shower areas must be reinforced with a minimum 32 x 32 x 0.55 mm galvanised metal angle (i.e. GIBFix® Angle or GIB® Rondo® NZ18) prior to lining the walls.

16.4 GIB® Wet Area plasterboards may be installed vertically or horizontally. Sheets are fixed with GIB® Grabber® screws at 150 mm centres to the perimeter of wall and to all intermediate studs. Adhesive must not be used in place of screws.

Ceilings

16.5 Supports of timber or steel battens or ceiling joists must be 450 mm centres for 10 mm GIB Aqualine®, or 600 mm centres for 13 mm GIB Aqualine® or GIB Toughline® Aqua.

16.6 GIB Aqualine® and GIB Toughline® Aqua sheets must be fixed with GIB® Grabber® screws at 600 mm centres around the perimeter of the ceiling and at 200 mm centre along supports. Alternatively, sheets are screw fixed at 600 mm centres along the supports and GIBFix® adhesive placed at 200 mm centres between the screws.

Readers are advised to check the validity of this Appraisal by referring to the Valid Appraisals listing on the BRANZ website, or by contacting BRANZ.

ABA20220988
APPROVED - Site Copy
Hastings District Council
20/09/2022

Penetrations and Sealants

17.1 All cut-outs for pipe penetrations must be made neatly using a hole saw. Cut-outs should be made approximately 12 mm diameter greater than the pipe.

17.2 A bead of sealant must be placed to the full thickness of the plasterboard sheet around all pipe penetrations, at bath rims and preformed shower bases and where an impervious junction is required at the floor/wall line.

17.3 In tiled areas, a bead of sealant 6 mm wide must also be placed to the full thickness of the tiles where the above situation occurs. The sealant manufacturer's technical literature must be followed for installation.

Jointing and Finishing

18.1 Jointing must be carried out in accordance with GIB® Site Guide Technical Literature.

18.2 Tiled shower areas must incorporate a waterproofing membrane over GIB® Wet Area Systems. Waterproofing membranes are outside the scope of this Appraisal and must otherwise be specified and approved.

Health and Safety

19.1 Dust resulting from the sanding of stopping and finishing compounds may be a respiratory irritant, and the use of a suitable facemask is recommended.

Basis of Appraisal

The following is a summary of the technical investigations carried out:

Tests

20.1 Winstone Wallboards Ltd GIB® plasterboards have been assessed for the following properties: MOR, MOE, paper tensile strength, paper shear strength, nail pull resistance, edge hardness, water resistance, hard and soft body impact tests and humidified deflection.

20.2 Cone calorimeter tests to ISO 5660 have been carried out by BRANZ.

Other Investigations

21.1 An assessment was made of the durability of the systems by BRANZ technical experts and found to be satisfactory.

21.2 Site inspections were carried out by BRANZ to assess the practicability of the installation of the systems, and to view completed installations.

21.3 The GIB® Wet Area Systems and GIB® Site Guide Technical Literature have been examined by BRANZ and found to be satisfactory.

Quality

22.1 Winstone Wallboards Ltd's manufacturing process and details of the quality and composition of the materials, have been examined by BRANZ and found to be satisfactory.

22.2 The quality management systems of Winstone Wallboards Ltd have been assessed and registered by TELARC as meeting the requirements of ISO 9001: 2015, Registration No. 581.

22.3 Winstone Wallboards Ltd is responsible for the quality of the product supplied.

22.4 The quality of the application and finish on site is the responsibility of the installation, stopping and finishing contractors.

22.5 Designers are responsible for the design of buildings.

22.6 Building owners are responsible for the maintenance in accordance with the instructions of Winstone Wallboards Ltd.

Readers are advised to check the validity of this Appraisal by referring to the Valid Appraisals listing on the BRANZ website, or by contacting BRANZ.

ABA20220988
APPROVED - Site Copy
Hastings District Council
20/09/2022

Sources of Information

- AS/NZS 1170: 2002 Structural design actions - General principles.
- AS/NZS 2588: 2018 Gypsum plasterboard.
- BRANZ Good Practice Guide: Tiling (3rd edition), April 2015.
- ISO 5660-1:2002 Reaction-to-fire tests - Heat release, smoke production and mass loss rate - Part 1: Heat release rate (cone calorimeter method).
- NZS 3603: 1993 Timber Structures Standard.
- NZS 3604: 2011 Timber-framed buildings.
- Ministry of Business, Innovation and Employment Record of Amendments - Acceptable Solutions, Verification Methods and handbooks.
- The Building Regulations 1992.

Readers are advised to check the validity of this Appraisal by referring to the Valid Appraisals listing on the BRANZ website, or by contacting BRANZ.

ABA20220988
APPROVED - Site Copy
Hastings District Council
20/09/2022

BRANZ

In the opinion of BRANZ, GIB® Wet Area Systems are fit for purpose and will comply with the Building Code to the extent specified in this Appraisal provided they are used, designed, installed and maintained as set out in this Appraisal.

The Appraisal is issued only to Winstone Wallboards Ltd, and is valid until further notice, subject to the Conditions of Appraisal.

Conditions of Appraisal

1. This Appraisal:
   a) relates only to the product as described herein;
   b) must be read, considered and used in full together with the Technical Literature;
   c) does not address any Legislation, Regulations, Codes or Standards, not specifically named herein;
   d) is copyright of BRANZ.
2. Winstone Wallboards Ltd:
   a) continues to have the product reviewed by BRANZ;
   b) shall notify BRANZ of any changes in product specification or quality assurance measures prior to the product being marketed;
   c) abides by the BRANZ Appraisals Services Terms and Conditions;
   d) warrants that the product and the manufacturing process for the product are maintained at or above the standards, levels and quality assessed and found satisfactory by BRANZ pursuant to BRANZ's Appraisal of the product.
3. BRANZ makes no representation or warranty as to:
   a) the nature of individual examples of, batches of, or individual installations of the product, including methods and workmanship;
   b) the presence or absence of any patent or similar rights subsisting in the product or any other product;
   c) any guarantee or warranty offered by Winstone Wallboards Ltd.
4. Any reference in this Appraisal to any other publication shall be read as a reference to the version of the publication specified in this Appraisal.
5. BRANZ provides no certification, guarantee, indemnity or warranty, to Winstone Wallboards Ltd or any third party.

For BRANZ

Chelydra Percy
Chief Executive

Date of Issue:
15 February 2021

Readers are advised to check the validity of this Appraisal by referring to the Valid Appraisals listing on the BRANZ website, or by contacting BRANZ.

ABA20220988
APPROVED - Site Copy
Hastings District Council
20/09/2022

AFFORDABLE FASCIA Available From Your Friends At Continuous Spouting

Affordable Fascia Ltd
94 Takanini School Rd
PO Box 151, Takanini, Auckland

Phone: 09 268 1555
Fax: 09 267 3157
Free Phone: 0800 50 1993

Email: sales@affordablefascia.co.nz
Website: www.affordablefascia.co.nz
GST No. 94 288 215

180MM FASCIA

Metal Tile or Longrun

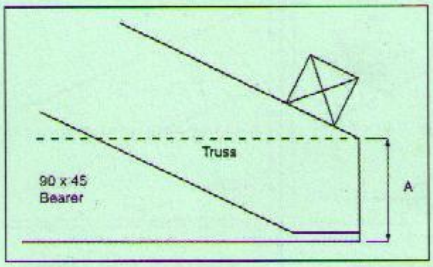

Gable End Detail

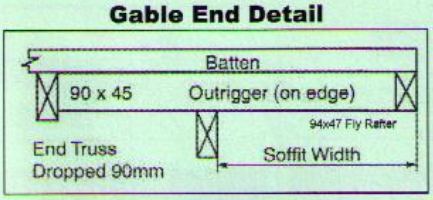

Soffit Drops

Pitch	Distance A	
	Longrun	Colourtile
17.5°	135mm	140mm
20°	135mm	140mm
22.5°	135mm	140mm
25°	140mm	145mm
27.5°	140mm	145mm
30°	140mm	145mm
35°	145mm	150mm
40°	145mm	150mm
45°	145mm	150mm

Concrete Tile

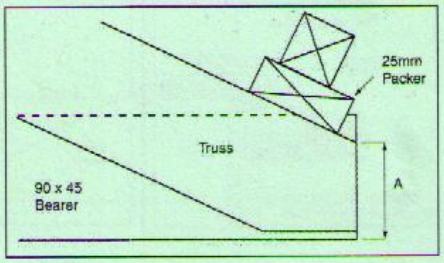

Gable End Detail

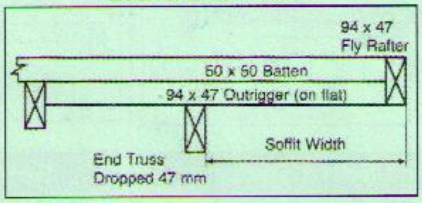

Soffit Drops

Pitch	Distance A
17.5°	105mm
20°	105mm
22.5°	105mm
25°	110mm
27.5°	110mm
30°	110mm
35°	115mm
40°	115mm
45°	115mm

Standard Colours

Copperstone	Titiania	Desert Sand
Greyfriars	Bone White	Mist Green
Ironsand	Karaka	Windsor Grey
Lignite	New Denim Blue	Pioneer Red
Metallic Silver	Permanant Green	Rivergum
Sandstone Grey	Scoria	Gull Grey
Threabow White	Black	Lichen

NB: Metal Fascia and Spouting will be sectional, not continuous

Dektite®Aluminium

The versatile solution for hundreds of applications.

ABA20220988
APPROVED - Site Copy
Hastings District Council
20/09/2022

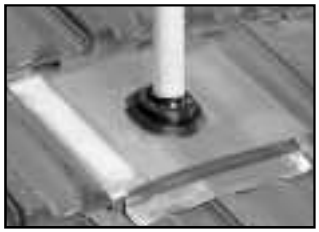

The base is 99.9% pure grade aluminium - strong, malleable and easy to install.

Environmentally friendly, ideal where potable water is collected.

INSTALLATION INSTRUCTIONS

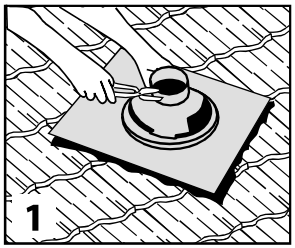

Trim Dektite™ cone to suit pipe size using sharp tin snips

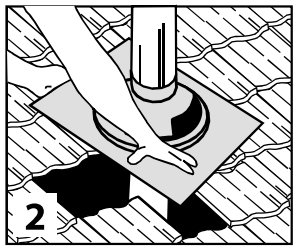

After lubricating the flue with water, slide Dektite™ down to the tile level.

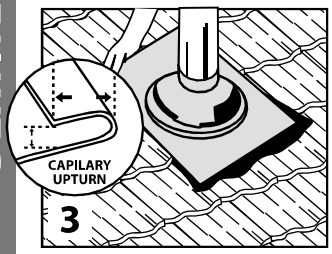

Place upper edge of base under tiles, forming an anti-capillary fold

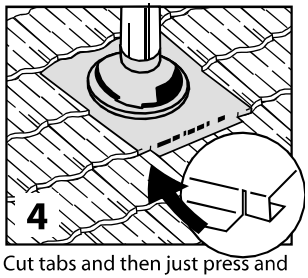

Cut tabs and then just press and tap the bottom corners to form a soaker run-off tray.

Easy Selection Guide

Code	PIPE mm	BASE mm	PITCH	COLOUR
TFA 12-70	12 - 70	600 x 450	0 - 40°	**BLACK** (EPDM)* **RED** (EPDM)*
TFA 50-170	50 - 170	600 x 500	0 - 45°	
TFA 110-220	110 - 200	900 x 600	0 - 45°	
TFA 160-300	160 - 300	900 x 764	0 - 45°	

E.P.D.M. withstands temperatures from -50°C to 115°C, & up to 150°C intermittently

HINT: When flashing a metal flue that has an exposed seam, using a neutral cure sealant, seal the seam from undersideof cowl to the top of Dektite® cone.

Dekstrip® Flashing

With the amazing patented stretch edge

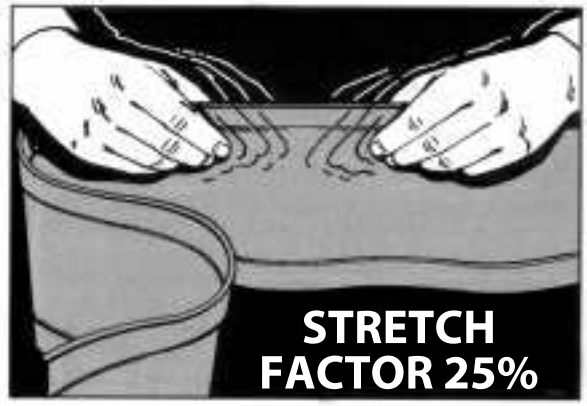

The edges of Dekstrip® contain an expanding aluminium strip (in concertina form) totally encased by the E.P.D.M. rubber flashing. The strip allows the flashing to be stretched and formed around most roof profiles - and maintain that shape. Fastening may be done through the aluminium strip using fasteners with a minimum 10mm diameter head.

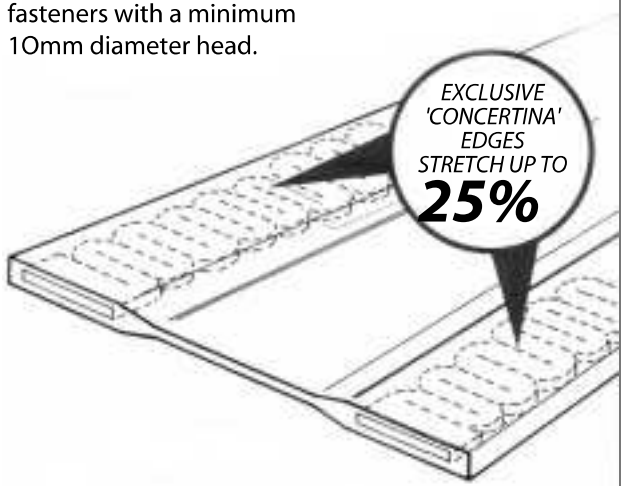

Both edges of Dekstrip® stretch up to 25% and retain shape over most roof cladding profiles.

ABA20220988
APPROVED - Site Copy
Hastings District Council
20/09/2022

James Hardie
a smarter way™

James Hardie®
EAVES AND SOFFITS



Installation Manual

AUGUST 2017 | NEW ZEALAND

ABA20220988
APPROVED - Site Copy
Hastings District Council
20/09/2022

Content

1 INTRODUCTION 3
1.1 HardieSoffit™ Lining 3
1.2 HardieFlex™ Eaves Lining 3
1.3 Eclipsa™ Eaves Lining 3
1.4 HardieGroove™ Soffit Lining 4
1.5 Villaboard® Soffit Lining 4
1.6 Product Description 5
1.7 Accessories 6

2 SAFE WORKING PRACTICES 9

3 FRAMING 11
3.1 Timber Frame 11
3.2 Steel Frame 11
3.3 Framing Set-Out 11
3.4 Batten Requirements 12
3.5 Skillion Roof Design 12

4 JOINTING OPTIONS 13
Hardiesoffit Lining 13
Hardieflex Eaves Lining 13
Eclipsa Eaves Lining 13
Hardiegroove Soffit Lining 13
Villaboard Soffit Lining 13

5 INSTALLATION 15
5.1 General 15
5.2 Fastener Durability 15
5.3 HardieSoffit Lining 15
5.4 HardieFlex Eaves Lining 15
5.5 HardieGroove Soffit Lining Fixing Method 16
5.6 Eclipsa Eaves Lining 16
5.7 Villaboard Soffit Lining (small soffits) 17
5.8 Villaboard Soffit And Ceiling Lining (Large Areas) 18
5.9 Titan® Facade Panel 21
5.10 Internal Swimming Pool Application 21
5.11 Special Details 22

6 JOINTING AND FINISHING 23
6.1 General 23
6.2 Glancing Light 23
6.3 Level of Finishes 23
6.4 Paint Finishes 24
6.5 Villaboard Soffit Lining Jointing and Stopping 24
Mixing Instructions 24
6.6 Set Joints 25

7 FINISHING 26
7.1 Painting 26

8 PRODUCT INFORMATION 27
8.1 General 27
8.2 Durability 27
8.3 Finishes 27

9 MAINTENANCE 27

PRODUCT WARRANTIES 31

WE VALUE YOUR FEEDBACK

To continue with the development of our products and systems, we value your input. Please send any suggestions, including your name, contact details, and relevant sketches to:

Ask James Hardie™
Fax 0800 808 988
literaturefeedback@jameshardie.co.nz

ABA20220988
APPROVED - Site Copy
Hastings District Council
20/09/2022

1 Introduction

James Hardie have a wide range of soffit linings and pre-finished soffit linings that enable you to create the look you want.

Cool, wide soffits and verandahs have, over the years, been a feature which specifiers have used to provide shade from the hot summer sun and to give UV protection to exterior paintwork and interior fabrics.

Today's high energy costs demand that all avenues be explored to develop cost-efficient ways for keeping our homes cool. One of these methods — tried and proven — is the use of wide soffits, verandahs and covered outdoor living areas. James Hardie products are resistant to fire and damage from moisture and rotting when installed and maintained as directed.

James Hardie HardieSoffit Lining, HardieFlex Eaves Lining, Eclipsa Eaves Lining, HardieGroove Soffit Lining and Villaboard Soffit Lining are not suitable for use as a cladding.





1.1

HardieSoffit™
LINING

HardieSoffit™ Linings are 4.5mm thick and are specifically manufactured for the narrow soffit around the perimeter of the house or building. Standard widths of 450mm, 600mm and 750mm are available.

- HardieSoffit Linings have an unsanded finish suitable for semi-gloss acrylics or lightly textured semi-gloss or high-gloss coatings. Smooth high-gloss coatings must be avoided as some surface undulations may be visible in critical light.
- HardieSoffit Linings can be nail-fixed to timber or mechanically fixed to a steel frame.
- HardieSoffit Linings can be uPVC jointed or the joints can be left expressed.

1.2

HardieFlex™
EAVES LINING

HardieFlex™ Eaves Lining are 4.5mm in thickness and are available in wider widths for use in wider soffits, ceilings and verandahs. They are complementary to the HardieSoffit Lining and are fixed and jointed in a similar way.

- HardieFlex Eaves Lining has an unsanded finish suitable for semi-gloss acrylics or lightly textured coatings. Smooth high-gloss coatings must be avoided as some surface undulations may be visible in critical light.
- HardieFlex Sheet 6mm, can also be used in eaves application for extra rigidity on larger spanning eaves.
- When higher impact or wind resistance is required, 6mm thick HardieFlex Sheet is used.

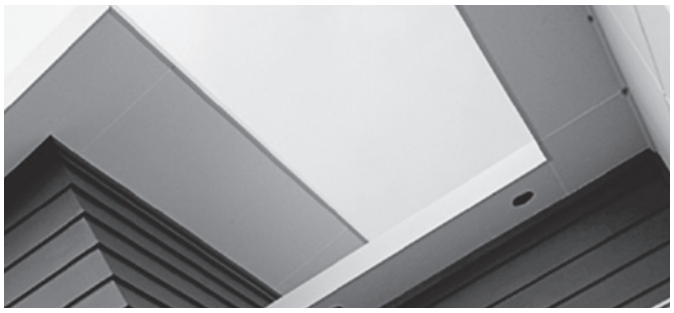

1.3

Eclipsa™
EAVES LINING

Eclipsa™ Eaves Lining is a 4.5mm thick, pre-finished acrylic eave providing innovative style and enduring performance.

- Easy to install, saving both time and money.
- A slipsheet minimises surface marks on paint during transportation and installation.

ABA20220988
APPROVED - Site Copy
Hastings District Council
20/09/2022





1.4

HardieGroove™

SOFFIT LINING

HardieGroove™ Soffit Lining has the charm of traditional tongue and groove timber panelling, but has all the qualities of a modern James Hardie fibre cement product. It's perfect for enhancing design lines on modern buildings or renovating old villas and bungalows.

- HardieGroove Soffit Lining comes with a half groove length ways along the edge of the sheet to achieve concealed joints.

1.5

Villaboard®

SOFFIT LINING

Villaboard® Soffit Linings are 6mm and 9mm in thickness to suit both residential and commercial applications. The recessed edges are suitable for flush jointing to give a smooth flush finish. Ideal for larger sized soffits.

- The sheets are fully sanded to give a smoother face surface.
- Two long sheet edges are supplied with a recessed finish and site-cut edges can be readily ground on site. Other combinations are also available. Refer Table 2, page 5.
- Square-edge sheets are also available. These sheets can be used for the alternative expressed, sealant-filled or uPVC joint finish.



This manual covers the use of HardieSoffit Lining, HardieFlex Eaves Lining, Eclipsa Eaves Lining, HardieGroove Soffit Lining, and Villaboard Soffit Lining in external eave and soffit applications. Further technical literature relating to these products and internal linings are available from James Hardie in the following manuals:

- HardieFlex Sheet Technical Specification.
- Villaboard Lining Installation Manual.
- HardieGroove Lining Installation Manual.
- Fire and Acoustic Design Manual.

The specifier or other responsible party for the project must ensure the information and details in this manual are appropriate for the intended application and specific design and detailing is undertaken for areas which fall outside the scope of this document.

MAKE SURE YOUR INFORMATION IS UP TO DATE

When specifying or installing James Hardie products, ensure you have the current manual. If you're not sure you do, or you need more information, visit www.jameshardie.co.nz or Ask James Hardie™ on 0800 808 868.

ABA20220988
APPROVED - Site Copy
Hastings District Council
20/09/2022

Table 1

HardieSoffit Lining Sheet Sizes

Square–cut edge for use with jointers

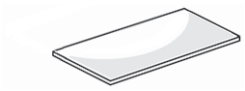

Length (mm)	Mass (kg/m²)	Width 1200mm		
		450	600	750
4.5mm thickness	6.5			
2400		401948	401947	401946

Table 2

HardieFlex Eaves Lining Sheet Sizes

Square-cut edge for use with jointers

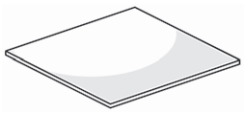

Width (mm)	Mass (kg/m²)	Length (mm)			
		1800	2400	2700	3000
4.5mm thickness	6.5				
900			400194		
1200		400190	400187	400185	400183

Table 3

Eclipsa Eaves Lining Sheet Sizes

Pre-finished square-cut edge sheet for use with jointers

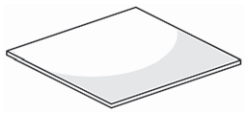

Length (mm)	Mass (kg/m²)	Width (mm)	
		600	1200
4.5mm thickness	6.6		
2400		404807	404808

Table 4

HardieGroove Soffit Lining Sheet Sizes

Half groove length ways to achieve concealed joints

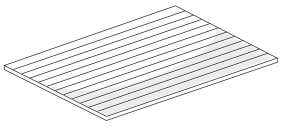

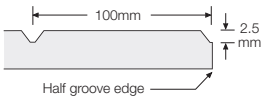

Length (mm)	Mass (kg/m²)	Width (mm)
		1200
7.5mm thickness	10.4	
2400		400246
2700		400245

Table 5

Villaboard Soffit Lining Sheet Sizes

Smooth recessed edge for flush jointing.
Square-cut edge also available for use with jointers.

Villaboard Lining 6mm has no chamfer on square edge sheet.
Villaboard Lining 9mm has small chamfer on square edge sheet.

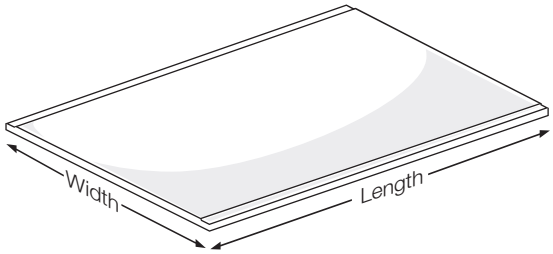

Length (mm)	Mass (kg/m²)	Width 1200mm		
		Edge Finish		
		4 rec/ edges	2 rec/ edges (long)	Square edges
6mm thickness	8.6			
2400		400432	400429	400444
2700			400428	
3000			400427	400442
9mm thickness	12.4			
2400		400439	400436	400445
2700			400435	
3000			400434	400059

ABA20220988
APPROVED - Site Copy
Hastings District Council
20/09/2022

Table 6

HardieFlex™ Eaves Lining And HardieSoffit™ Lining — Accessories / Tools Supplied by James Hardie					
Accessories	**Description**	**Product Code**	**Accessories**	**Description**	**Product Code**
	**Soffit 4.5mm PVC 2-way Jointer** 2400mm long, uPVC / White	300915		**Hardiejointer 5mm** uPVC / White 2400mm long 750mm long 600mm long 450mm long	 300729 300921 300920 300919
	**6mm Hardiejointer** uPVC/Bone colour 2400mm long 3000mm long	 300730 300734		**HardieFlex 5mm Capping Mould** 2400mm long, uPVC / White	300538
	**6mm Capping Mould** uPVC/Bone colour 2400mm long 3000mm long	 300539 300540		**Scotia Mould (base and cap)** 2400mm long, uPVC / White	300916
	**Fastfix Fasteners** 38 x 12mm, Nylon / White	300632	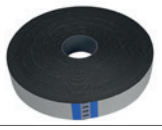	**Inseal 3259** 1.5mm thick 50mm wide x 50m long, Black compressible foam	300767
	**HardieKnife™** Scoring tool for easy cutting.	305926			

Table 7

Eclipsa Eaves Lining — Accessories / Tools Supplied by James Hardie					
Accessories	**Description**	**Product Code**	**Accessories**	**Description**	**Product Code**
	**Hardiejointer 5mm uPVC** 2400mm long 750mm long 600mm long 450mm long	 300729 300921 300920 300919		**Soffit 4.5mm PVC 2-way Jointer** 2400mm long, uPVC / White	300915
	**Soffit Scotia Mould (base and cap)** 2400mm long, uPVC / White	300916		**HardieFlex Capping Mould 5mm** 2400mm long, uPVC / White	300538
	**Fastfix Fasteners** 38 x 12mm, Nylon / White	300632	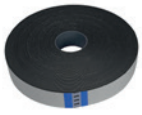	**Inseal 3259** 1.5mm thick 50mm wide x 50m long, Black compressible foam	300767
	**Eclipsa Eaves Lining Touch-up Paint** 15ml	Free Ask James Hardie on 0800 808 868		**HardieKnife™** Scoring tool for easy cutting.	305926

ABA20220988
APPROVED - Site Copy
Hastings District Council
20/09/2022

Table 8

HardieGroove Soffit Lining — Accessories / Tools Supplied by James Hardie					
Accessories	**Description**	**Product Code**	**Accessories**	**Description**	**Product Code**
	**Soffit Scotia Mould (base and cap)** 2400mm long, uPVC / white	300916	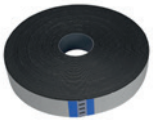	**Inseal 3259** 1.5mm thick 50mm wide x 50m long, black compressible foam	300767
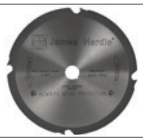	**HardieBlade Saw Blade** Ø184mm poly crystalline diamond blade, for fast, clean cutting of James Hardie fibre cement.	300660		**James Hardie Base Coat** Base compound for filling over screws. 4kg Pail 15kg Bag	 304490 304491
	**HardieDrive Screw s/s 316** 30mm x 7g. 100 per jar For fastening to timber frames.	300928		**Villadrive Screw 6g x 30mm** For fastening to timber frames. 100/jar 5kg Box Collated/ 1000	 300992 300993 300994
	**HardieKnife™** Scoring tool for easy cutting.	305926			

Table 9

Villaboard® Soffit Lining — Accessories / Tools Supplied by James Hardie					
Accessories	**Description**	**Product Code**	**Accessories**	**Description**	**Product Code**
	**Soffit Scotia Mould (base and cap)** 2400mm long, uPVC / White	300916	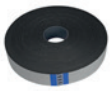	**Inseal 3259** 1.5mm thick 50mm wide x 50m long, Black compressible foam	300767
	**Hardiejointer 6mm** uPVC / Bone colour 2400mm long 3000mm long	 300730 300734		**9mm Hardiejointer** uPVC / Bone colour 3000mm long	300736
	**HardieFlex Capping Mould 6mm** uPVC / Bone colour 2400mm long 3000mm long	 300539 300540		**Control Joint** 2700mm long, uPVC / White	300978
	**Corner Angle** uPVC 3000mm long	300669		**James Hardie Top Coat** Topping compound for flush finished jointing. 3kg Pail 15kg Pail	 304492 304493
	**James Hardie Base Coat** Base compound for flush finished jointing. 4kg Pail 15kg Bag	 304490 304491		**HardieBlade Saw Blade** Ø184mm poly crystalline diamond blade, for fast, clean cutting of James Hardie fibre cement.	300660
	**HardieDrive Screw s/s 316** 30mm x 7g 100 per jar For fastening to timber frames.	300928		**Villadrive Screw 6g x 30mm** For fastening to timber frames. 100/jar 5kg Box Collated/1000	 300992 300993 300994
	**FibreZip® Screws** Self drilling rib head screw Box 1000	303840		**HardieKnife™** Scoring tool for easy cutting.	305926

ABA20220988
APPROVED - Site Copy
Hastings District Council
20/09/2022

Table 10

Components Not Supplied by James Hardie

James Hardie recommends the following products for use in conjunction with its eaves and soffit linings. James Hardie does not supply these products. Please contact component manufacturer for information on their warranties and further information on their products.

Accessories	Description	Accessories	Description
	**HardieFlex Nail** 40 x 2.8mm galvanised or stainless steel nails.	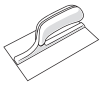	**Second Coat Trowel 200mm** For installing second coats on set joints on Villaboard Lining.
	Rondo P35 Control joint used in movement joints.	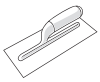	**Finishing Coat Trowel** For installing top coats on set joints on Villaboard Lining.
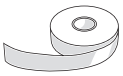	**Perforated Paper Tape** Joint reinforcing tape.		**Corner Tool** For setting of internal corners on Villaboard Lining.
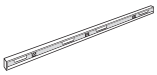	**Level/straight Edge** For checking straightness of frame.		**Hawk** To assist in the application of finishing compounds especially with the use of trowels.
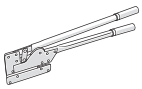	**Hand Guillotine** Guillotine for cutting fibre cement.	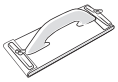	**Hand Sander** For sanding set joints on Villaboard Lining.
	**Collated Screw Gun**		**Notched Trowel** For applying tile adhesive to face of Villaboard Lining.
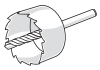	**Hole Saw**	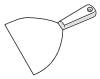	**Broadknife 150mm** For setting of joints on Villaboard Lining.
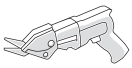	**Electric shear/Fibreshear** For cutting Villaboard Soffit Lining, HardieGroove Soffit Lining, HardieSoffit Lining, HardieFlex Eaves Lining.	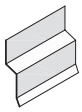	**Flashing to Table 20 'E2/AS1'** Flashing fabricator
	**Flashing Tape** Proprietary tape to adhere to building wrap. Tyvek, Protecto wrap or similar		**Flexible Joint Sealant** Tube Sikaflex MS or similar
	**Masking Tape** 3M Scotch™ Blue 2090 - I8E 70006576972 or Sellotape 5855 Long Life		**Paperback Corners** 'Goldline' corner moulds
	**Polyurethane Tape**		**Adhesive Sealant** Sikaflex-11FC by Sika Seal N Flex-1 by Bostik
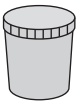	**Acrylic Paint** Dulux X10 or similar brand		**Waterproofing Admixture** Multiplast Resin by Plaster Systems. Used in diluted form over Villaboard Lining sheet edges to control moisture suction before flush stopping.

ABA20220988
APPROVED - Site Copy
Hastings District Council
20/09/2022

2 Safe working practices

STAY HEALTHY WHEN WORKING WITH BUILDING PRODUCTS CONTAINING CRYSTALINE SILICA

Crystalline Silica
What is it? Why and when is it a health hazard?

Crystalline Silica is
- Commonly known as sand or quartz
- Found in many building products e.g. concrete, bricks, grout, wallboard, ceramic tiles, and all fibre cement materials

Why is Crystalline Silica a health hazard?
- Silica can be breathed deep into the lungs when present in the air as a very fine (respirable) dust
- Exposure to silica dust without taking the appropriate safety measures to minimise the amount being breathed in, can lead to a potentially fatal lung disease – silicosis – and has also been linked with other diseases including cancer. Some studies suggest that smoking may increase these risks.
- The most hazardous dust is the dust you cannot see!

When is Crystalline Silica a health hazard?
- It's dangerous to health if safety protocols to control dust are not followed when cutting, drilling or rebating a product containing crystalline silica.
- Products containing silica are harmless if intact (e.g. an un-cut sheet of wall board).

FAILURE TO ADHERE TO OUR WARNINGS, SAFETY DATA SHEETS AND INSTALLATION INSTRUCTIONS WHEN WORKING WITH JAMES HARDIE PRODUCTS MAY LEAD TO SERIOUS PERSONAL INJURY OR DEATH.

AVOID BREATHING IN CRYSTALLINE SILICA DUST!

Safe working practices

👎 NEVER use a power saw indoors or in a poorly ventilated area

👎 NEVER dry sweep

👍 ALWAYS use M Class extractor unit as a minimum and always hose down with water/wet wipe for clean up

👎 NEVER use grinders

👍 ALWAYS use a circular sawblade specifically designed to minimise dust creation when cutting fibre cement – preferably a sawblade that carries the HardieBlade™ logo or one with at least equivalent performance.

👍 ALWAYS follow tool manufacturers' safety recommendations

👍 ALWAYS expose only the minimum required depth of blade for the thickness of fibre cement to be cut

👍 ALWAYS wear an approved properly-fitted, approved dust mask (P1 or P2) or respirator

Use one of the following methods based on the required cutting rate:

BEST
- HardieKnife™
- Hand guillotine
- Fibreshear

BETTER
- Dust reducing circular saw equipped with HardieBlade™ Saw Blade and M Class extractor unit.

GOOD
- Dust reducing circular saw with HardieBlade™ Saw Blade

Working outdoors

👍 Make sure you work in a well ventilated area

👍 Position cutting station so wind will blow dust away from yourself and others in the working area

👍 Cut products with either a HardieKnife or fibre cement shears or, when not feasible, use a HardieBlade™ Saw Blade (or equivalent) and a dust-reducing circular saw attached to a M Class extractor unit

👍 When sawing, sanding, rebating, drilling or machining fibre cement products, always:
- Wear your P1 or P2 mask (correctly fitted in accordance with manufacturers' instructions) and when others are close by, ask them to do the same
- If you are not clean shaven, then use a powered air respirator with a loose fitting head top.
- Wear safety glasses
- Wear hearing protection
- When others are close by, ask them to do the same.

Working indoors

👎 Never cut using a circular saw indoors

👍 Position cutting station in a well ventilated area

👍 Cut ONLY using a HardieKnife, hand guillotine or fibreshears (manual, electric or pneumatic)

👍 Make sure you clean up BUT never dry sweep. Always hose down with water/wet wipe or use an M Class extractor unit

IF CONCERN STILL EXISTS ABOUT EXPOSURE LEVELS OR YOU DO NOT COMPLY WITH THE ABOVE PRACTICES, YOU SHOULD ALWAYS CONSULT A QUALIFIED INDUSTRIAL HYGIENIST.

ABA20220988
APPROVED - Site Copy
Hastings District Council
20/09/2022

Working Instructions

- Refer to Recommended Safe Working Practices before starting any cutting or machining of product.

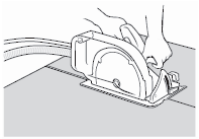

HardieBlade™ Saw Blade

The HardieBlade™ Saw Blade used with a dust-reducing saw is ideal for fast, clean cutting of James Hardie fibre cement products. A dust-reducing saw uses a dust deflector or a dust collector connected to a vacuum system. When sawing, clamp a straight-edge to the sheet as a guide and run the saw base plate along the straight edge when making the cut.

Hole-Forming

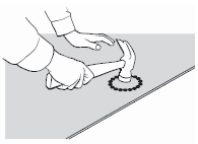

For smooth clean cut circular holes:

- Mark the centre of the hole on the sheet.
- Pre-drill a 'pilot' hole.
- Using the pilot hole as a guide, cut the hole to the appropriate diameter with a hole saw fitted to a heavy duty electric drill.

For irregular holes:

- Small rectangular or circular holes can be cut by drilling a series of small holes around the perimeter of the hole then tapping out the waste piece from the sheet face.
- Tap carefully to avoid damage to sheets, ensuring that the sheet edges are properly supported.

STORAGE & DELIVERY

Keeping products and people safe

Off loading

- James Hardie products should be off-loaded carefully by hand or by forklift.
- James Hardie products should not be rolled or dumped off a truck during the delivery to the jobsite.

Storage

James Hardie products should be stored:

- in their original packaging
- under cover where possible or otherwise protected with a waterproof covering to keep products dry
- off the ground – either on a pallet or adequately supported on timber or other spacers
- flat so as to minimise bending

James Hardie products must not be stored:

- directly on the ground
- in the open air exposed to the elements

JAMES HARDIE IS NOT RESPONSIBLE FOR DAMAGE DUE TO IMPROPER STORAGE AND HANDLING.

TIPS FOR SAFE AND EASY HANDLING

Weatherboard products

- Do not lift planked products flat and in the middle
- Carry the products on the edge
- If only one person is carrying the product, hold it in the middle and spread arms apart to better support the product
- If two people are carrying the plank, hold it near each end and on edge
- Exercise care when handling weatherboard products to avoid damaging the edges/corners

Sheet products

- Carry with two people
- Hold near each end and on edge
- Exercise care when handling sheet products to avoid damaging the edges/corners

3 Framing

ABA20220988
APPROVED - Site Copy
Hastings District Council
20/09/2022

3.1 TIMBER FRAME

Timber framing must be in accordance with NZS 3604 Timber Frame Buildings.

Specific design to NZS 3603 and AS/NZS 1170 can also be undertaken providing that:

- the framing centres do not exceed those given in this specification
- the framing member widths conform to this specification.

Also refer to the Approved Document for NZBC Clause B2 'Durability' and NZS 3602 (Timber and Wood-Based Products for use in Buildings) regarding timber treatment requirements and allowable moisture contents in timber for various components of the building. Also refer to the framing manufacturer's literature for further guidance on the use of treated timber.

3.2 STEEL FRAME

The figures in this brochure are drawn for timber framing. However, steel framing and furring channels can also be used.

All metal framing centres are to be the same as specified for timber frame in this manual.

Steel framing members must be fabricated from light-gauge sheet steel 0.55mm thick minimum to 1.6mm maximum. If heavier sections are used difficulties may be experienced in fixing the self-drilling, self-tapping fasteners. Refer to specific details for the minimum flange width requirements.

Sheets must not be fixed directly to drawn steel or hot-rolled steel sections. These must first be battened out with ex 50mm-thick (40mm minimum) timber battens or light-gauge metal furring channels.

Screw-fix 6mm or thicker sheets only.

Screw fixings can be finished flush or sunk a maximum of 0.5mm below the sheet surface ready for filling.

NOTE: The fasteners must not be over driven as will reduce the holding capaciity of the sheet.

3.3 FRAMING SET-OUT

For the framing set-out of up to 600mm-wide soffit refer to Figure 1.

For the framing set-out of 601mm to 1200mm wide soffits refer to Figure 2.

3.3.1 Pre-finished steel fascia/gutters

When pre-finished steel fascia/gutters are used the soffit edge must be supported 4mm minimum into fascia recess, similar to Figure 10.

Ribbon board to be continuous for product fixing.

NOTE: Because of the limited fascia groove available with some metal fascias a supporting ribbon board will be required with fixings at 300mm centres maximum. Pre-finished soffits can distort due to surface tension when adequate edge support is not provided.

Table 11

Eaves Lining Framing Centres		
Eaves And Soffit Width (mm)	**Wind Zone**	**Max. Soffit Bearer Centres (mm)**
Up to 450	L, M	1200
	H, VH	900
451 - 600	L, M	1200
	H, VH	600
601 - 1200	L, M, H, VH	600
Various	EH*	600

*HardieFlex Sheet 6mm or Villaboard Lining 6mm must be used in EH Wind Zone with soffit bearers maximum 600mm centres.

Figure 1: Eaves and soffit up to 600mm

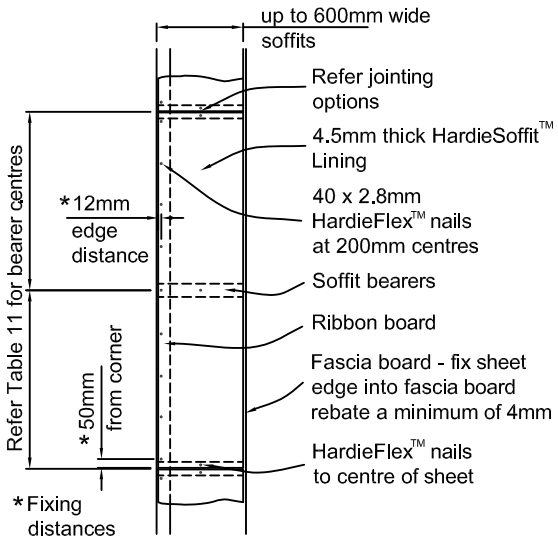

Notes

1. HardieFlex™ nails are the usual fixing method for HardieSoffit™ Lining. The fastfix method can also be used as an alternative.
2. When fastfix fastenings are used refer to Table 7 and Figure 8 and 9.

ABA20220988
APPROVED - Site Copy
Hastings District Council
20/09/2022

Figure 2: Eaves and soffits 601mm to 1200mm

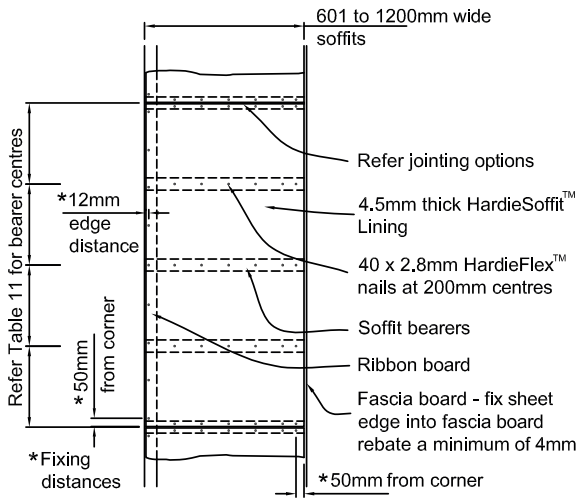

1. HardieFlex™ nails are the usual fixing method for HardieSoffit™ Lining. The fastfix method can also be used as an alternative.
2. When fastfix fastenings are used refer to Table 7 and Figure 8 and 9.

NOTE: Because of the limited fascia groove available with some metal fascias a supporting ribbon board will be required with fixings at 300mm centres maximum. Pre-finished soffits can distort due to surface tension when adequate edge support is not provided.

3.4 BATTEN REQUIREMENTS

Battens are required when sheets are fixed over:

- Gypsum board exceeding 20mm in thickness
- Softboard, polystyrene or similar
- Concrete, masonry block or brick.

Timber battening is to be a minimum of 35mm deep x 40mm wide to achieve adequate sheet nail penetration.

Steel battens must be minimum 0.55mm thick, 23mm deep and have a bearing surface of 38mm min. Battens must be galvanised to meet the durability requirements of the New Zealand Building Code (NZBC) and fixed to manufacturer's specifications. All battening centres and sheet fixing is to be strictly in accordance with the framing and fixing required by this manual. Care must be taken to ensure the battens are packed and aligned to give a true even surface for the sheets to be fixed. Check the face of the battens with a long straight-edge before fixing sheets.

3.5 SKILLION ROOF DESIGN

When installing soffit linings direct to the under side of skillion roof framing, ensure that sufficient ventilation has been provided within the roof space. The temperatures within these smaller roof spaces can reach very high levels in certain conditions and this can cause cracking in flush stopped joints due to excessive movement in roof framing. Therefore the framing in skillion soffits and ceilings need a specific engineering design consideration.

General design guide for a narrow strip of flash stopped soffits is to provide a control joint at 4.8m centres.

General design guide for large flash stopped soffits is to provide control joints at 4.8m x 3.6m in either direction when fixing to this type of framing.

Figure 3: uPVC Hardiejointer detail

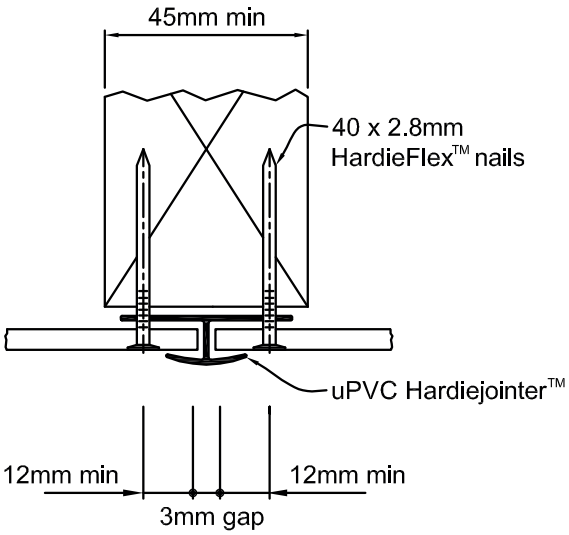

ABA20220988
APPROVED - Site Copy
Hastings District Council
20/09/2022

4 Jointing options

- All soffit lining sheet edges must be supported by framing and/or a fascia board.

HARDIESOFFIT LINING

- Refer to Figure 3 for uPVC Hardiejointer detail
- Refer to Figure 5 for express joint detail
- Refer to Figure 9 for two-way uPVC jointer

HARDIEFLEX EAVES LINING

- Refer to Figure 3 for uPVC Hardiejointer detail
- Refer to Figure 4 for butt joint detail
- Refer to Figure 5 for express joint detail
- Refer to Figure 9 for two-way uPVC jointer

ECLIPSA EAVES LINING

- Refer to Figure 3 for uPVC Hardiejointer detail
- Refer to Figure 8 for Fastfix Fasteners fixing detail. Use a 6mm diameter masonry drill bit to drill a hole and fix fasteners
- Refer to Figure 9 for Two-way uPVC Jointer

HARDIEGROOVE SOFFIT LINING

- Sheets have half groove along the long edges for butt jointing
- Sheets to have chamfer formed on site along the short edge for butt jointing

VILLABOARD SOFFIT LINING

- Refer to Figure 6 for flush joint details. Refer to Section 5.5 for flush jointing
- Refer to Figure 3 for uPVC Hardiejointer detail
- Refer to Figure 4 for butt joint detail
- Refer to Figure 5 for express joint detail
- Refer to Figure 7 for sealant joint detail

Figure 4: Butt joint detail

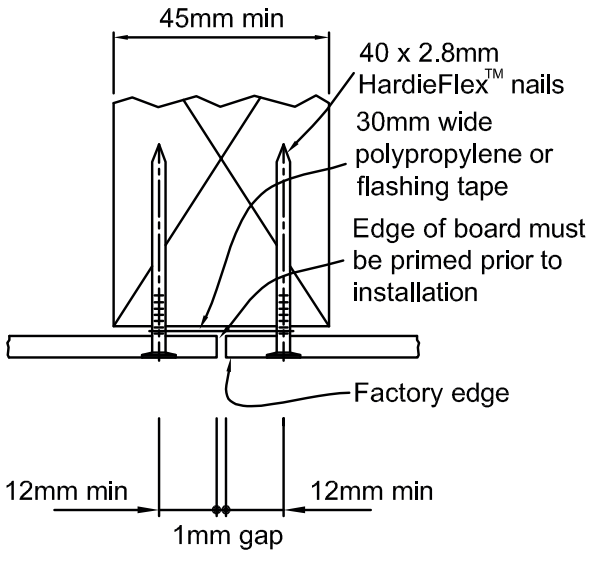

Figure 5: Expressed joint detail

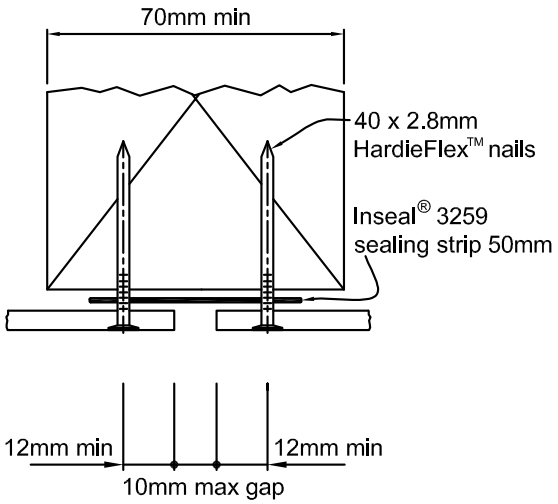

Figure 6: Vertical flush joint setout

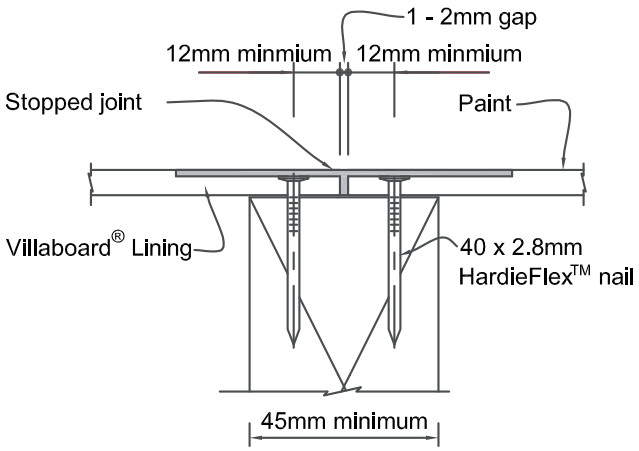

Figure 7: Sealant joint detail

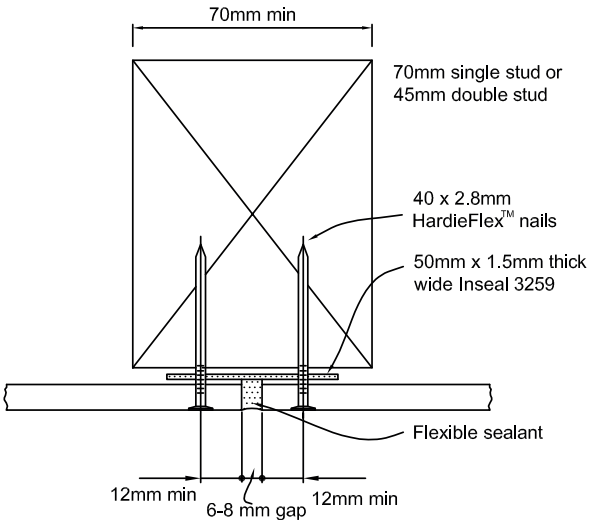

ABA20220988
APPROVED - Site Copy
Hastings District Council
20/09/2022

Figure 8: Fastfix fastener fixing detail

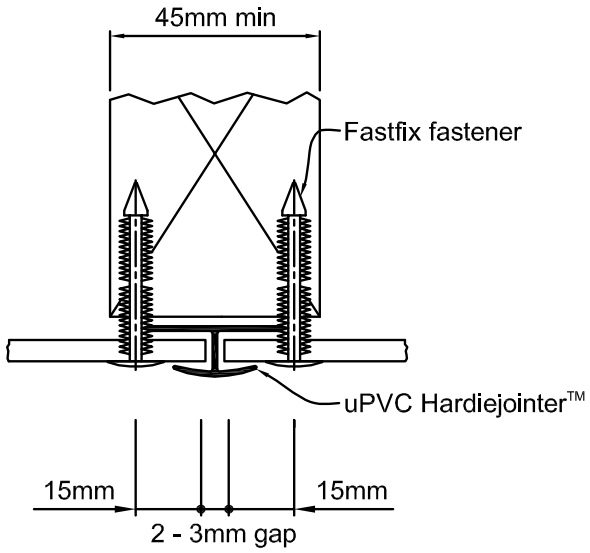

Note: Use a 6mm drill bit for drilling holes in sheet for fixing Fastfix fasteners.

Figure 9: Two-way uPVC jointer

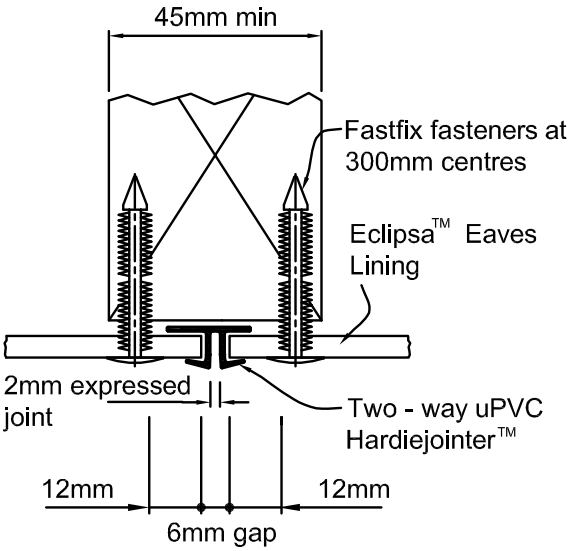

Note: Use a 6mm drill bit for drilling holes in sheet for fixing Fastfix fasteners.

Figure 10: Cladding detail with scotia mould

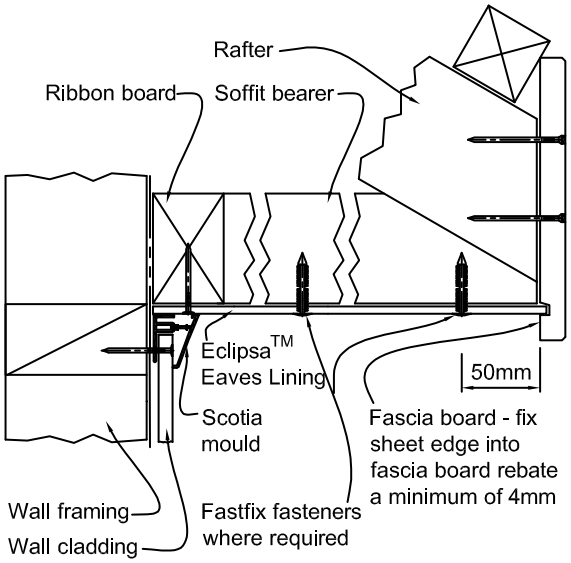

Figure 11: Brick veneer detail with scotia mould

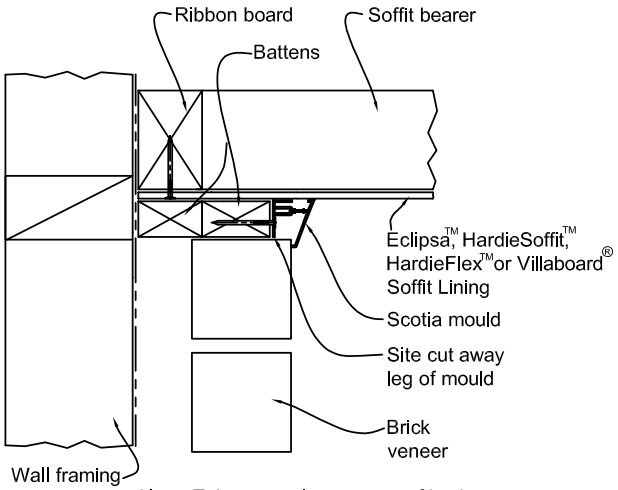

Note: Take vertical mortar out of bricks to provide ventilation as required by NZS 3604

ABA20220988
APPROVED - Site Copy
Hastings District Council
20/09/2022

5 Installation

This installation manual covers the use of James Hardie Eaves and Soffits for buildings within the scope of NZS 3604. For all other buildings specific engineering design is required.

5.1 GENERAL

Refer to Table 11 and Figure 1 and 2 regarding nail fixing centres, for framing and types of fasteners.

The eaves/soffits must be sealed against claddings to minimise moisture ingress behind the claddings. The roof must have been installed before installing the soffits linings. Where the soffits are sloping upwards away from the wall, a mechanical flashing must be provided in the soffit to wall junction. The flashing is fixed under soffit lining and laps over the face of cladding by 35mm minimum Refer to Figure 27 - Figure 30.

5.1.1 Drip Edge

All soffit linings must either be installed with a grooved fascia, refer Figure 10, or with exterior cladding which forms a drip edge below the soffit lining by 15mm minimum. Soffit linings are generally fitted into the recess formed in fascia board to form the drip edge.

5.1.2 Structural Ceiling Diaphragms

HardieFlex Eaves Lining and Villaboard Soffit Lining are suitable for use in structural ceiling diaphragms as per NZS 3604. Refer to the James Hardie Bracing Design Manual.

5.1.3 Curved Applications

HardieFlex Eaves Lining and Villaboard Soffit Lining can be used for curved applications.

The minimum bending radii are shown below.

Table 12

Curved Soffit/Ceiling Minimum Bending Radii	
	Along length (mm)
9mm Villaboard Lining	3000
6mm Villaboard Lining	1800
HardieFlex Eaves Lining	1800
HardieSoffit Lining	1800

NOTE: The bending radii given above require no pre-wetting of the sheet. Mechanical fix at 200mm centres maximum to entire framing.

To maintain the smoothness of the curve, ceiling battens are generally required at spacings as shown below.

Table 13

Curved Lining — Soffit Batten Spacing	
Range of Radii (mm)	**Soffit batten spacing (mm)**
1800 to 3000	300
Above 3001	400

5.1.4 FIRE RATED SOFFITS

For full details refer to the James Hardie Fire and Acoustic Design Manual or Ask James Hardie on 0800 808 868.

5.2 FASTENER DURABILITY

Fasteners used in external applications must meet the minimum durability requirements of the NZBC. NZS 3604 specifies the requirements for fixing's material to be used in relation to the exposure conditions and are summarised in Table 14.

Table 14

Exposure conditions and nail selection prescribed by NZS 3604		
Zone / Nail Material		
Zone D*	Zone C outside sea spray zone and Zone B and geothermal hot spots	Bracing — All zones
Grade 316 Stainless	Hot-dipped galvanised or 316 stainless	Grade 316 Stainless

* (Zone C areas where local knowledge dictates that increased durability is required, appropriate selection shall be made)

When using screws to fix into steel framing a minimum class-3 coated screw must be used.

5.3 HARDIESOFFIT LINING

For framing and fixing schedules refer to Section 3.

All sheet edges are to be supported by framing or a fascia board. Fixings are to be at 200mm centres to all framing (refer Figures 1 and 2).

HardieSoffit Lining up to a max. width of 600mm can be jointed up to a maximum 150mm off the ceiling/soffit batten when using uPVC jointers.

NOTES

1. Use of 6mm thick sheets will minimise the deflection and enhance the impact resistance.
2. Sheets can be jointed as per Section 4.
3. Do not screw fix 4.5mm thick sheets.

5.4 HARDIEFLEX EAVES LINING

For framing and fixing schedules refer to Section 3.

All sheet edges are to be supported by framing or a fascia board. Fixings are to be at 200mm centres to all framing (refer Figures 1 and 2).

NOTES

1. Use of 6mm thick sheets will minimise the deflection and enhance the impact resistance.
2. Sheets can be jointed as per Section 4.
3. Do not screw fix 4.5mm thick sheets.

ABA20220988
APPROVED - Site Copy
Hastings District Council
20/09/2022

5.5 HARDIEGROOVE SOFFIT LINING FIXING METHOD

For framing and fixing schedules refer to Section 3.

The recommended fixing methods are combined nail and adhesive or screw and adhesive. (Refer Figure 12).

To achieve a concealed joint, butt the long edges together (half grooved). (Refer Figure 13).

Figure 12: Nail or screw and adhesive fixing

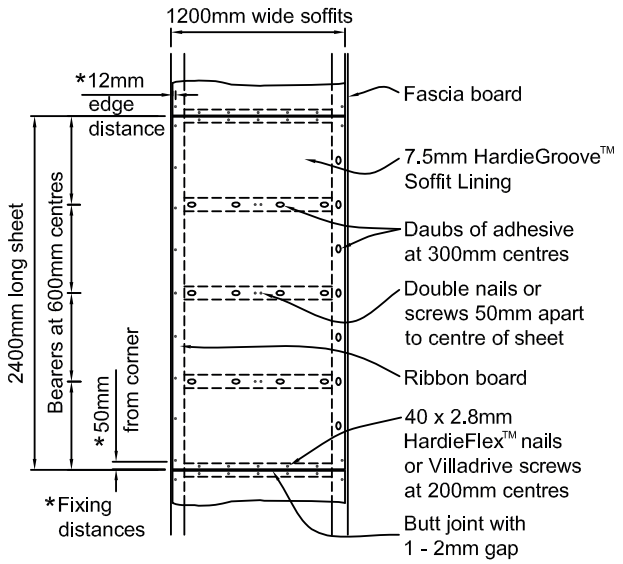

NOTES

1. Do not place nails or screws within 100mm of the adhesive daubs.
2. Fix with either HardieFlex nails 40 x 2.8mm (galvanised or 316 stainless steel), Villadrive wood screws or HardieDrive stainless steel 30mm x 7g wood screws.
3. Use only stainless steel fixings in sea spray zones.
4. When butt jointing short ends of HardieGroove Lining in ceiling/soffit applications, the short edges must be cut square and have chamfer formed.

Nails must be finished flush with the sheet surface. Screw heads can be finished 0.5mm below the sheet surface and stopped.

In steel framing the fasteners should be driven as close as possible to the stud corners to avoid deflection of the stud flange

Figure 13: Sheet edge and groove detail

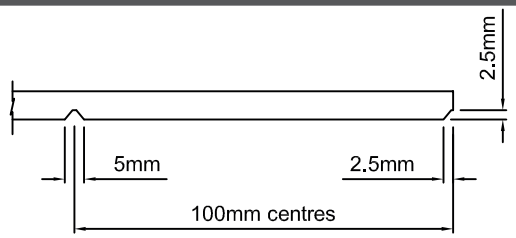

Note: Sheets are grooved along the length of the sheet.

5.5.1 Finishing

Once the sheets are in place, fill over all driven fixings with James Hardie Base Coat to the required level of finish.

5.6 ECLIPSA EAVES LINING

- Eclipsa Eaves Lining are to be supported by bearers and fasteners at the maximum spacings specified for the 4.5mm sheets in Section 3, Table 11 and Figures 3, 8 and 9 of this manual
- To fix larger soffit, ceiling or verandah applications provide a perimeter frame to all sheet edges and intermediate nogging at the centres shown in Table 11.
- Fix the Eclipsa Eaves Lining into the fascia board groove then nail into the ribbon board at 300mm centres with 40 x 2.8mm HardieFlex nails. Ensure nails will be hidden by the scotia mould or timber scotia (refer Figures 10, 11 and 14).
- Use a 6mm-diameter masonry bit to drill holes and fix Fastfix fasteners (refer Figures 8 and 9).
- Eclipsa Eaves Lining up to a maximum 600mm width can be jointed up to a maximum 150mm off the ceiling/soffit batten when using uPVC jointers.

Figure 14: Fastfix fastener and adhesive fixing

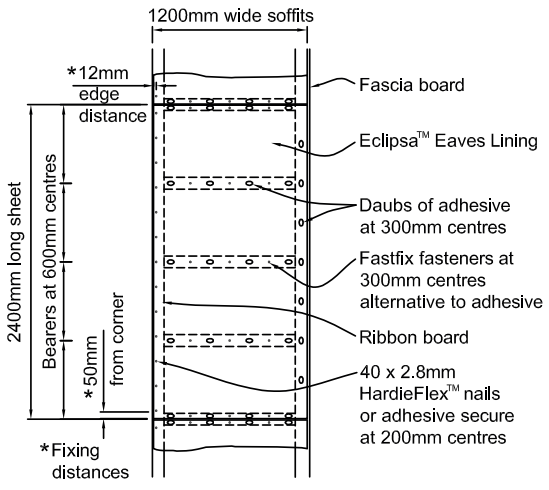

ABA20220988
APPROVED - Site Copy
Hastings District Council
20/09/2022

5.6.1 Fastfix fasteners

Fastfix fasteners (38mm long) can be used as an alternative fixing for prefinished soffit and ceiling systems in conjunction with adhesives. Drill a 6mm-diameter hole through the sheet and framing to insert the Fastfix fastener. In timber the hole must be 40mm deep.

5.6.2 Masking Tape

The recommended masking tape for use with Eclipsa Eaves Lining is 3M Scotch Blue I8E 2090 or Sellotape 5855 longlife. This tape can only be left on the Eclipsa Eaves Lining for maximum 7 days, otherwise tape removal may cause paint loss.

5.7 VILLABOARD SOFFIT LINING (SOFFITS UP TO 1200mm)

Villaboard Lining 6mm-thick is used when a smooth sanded sheet is required to achieve a painted flush finish.

Refer to the framing fixing schedule Section 3 Table 11, Figures 1 and 2, and finishing schedules on Section 6.

Refer to the flush jointing procedures, Section 6.

Fix with either HardieFlex nails 40 x 2.8mm (galvanised or 316 stainless steel), Villadrive sood screws or HardieDrive stainless steel 30mm x 7g wood screws

Screws finished 0.5mm below surface,

Nails finished flush with surface.

Figure 15: Nail/screw and adhesive fixed soffit

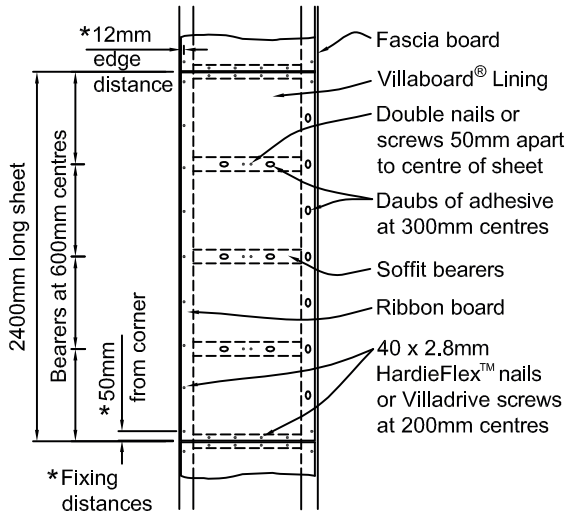

- Alternatively sheets can be fixed with nails / screws only at 200mm centres at sheet edges and 250mm centres at intermediate framing

Figure 16: Soffit cross section

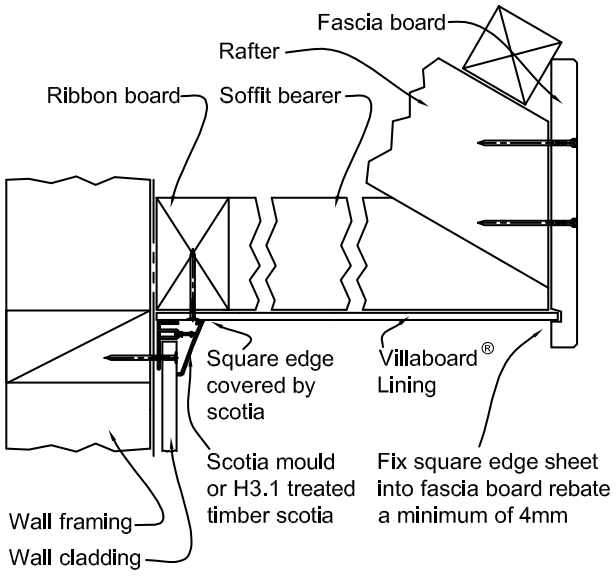

5.7.1 Control Joints

Control joints are required in long runs of Villaboard Lining soffits/ ceilings to accommodate structural movement. Control joints must also be provided where the soffits change in direction, change in level, where there is a construction joint in framing or where the soffits continue into passage ways etc. See Table 15 for maximum control joint spacing and Figure 17 for a typical control joint detail.

5.7.2 Jointing Options

Villaboard Soffit Lining is suitable for:

- Flush-jointed narrow strip soffits around a building
- Flush-jointed ceilings over verandahs, porches and entryways to residential and small-scale commercial buildings
- Expressed, uPVC-jointed and sealant-filled joint ceilings where a smooth surface finish is required
- All edges to be supported by the framing.

Table 15

Maximum spacing for control joints (m)		
	STEEL FRAMING	TIMBER FRAMING
General	4.8	7.2

ABA20220988
APPROVED - Site Copy
Hastings District Council
20/09/2022

5.7.3 Narrow-Strip Flush-Jointed Soffits And Ceilings

In these applications sheets must be jointed on the framing as shown in Figures 1 and 2. Control joints, as shown in Figure 17, must be located at a distance as specified in Table 15. Sheets must not be fixed to the bottom cord of roof trusses.

Figure 17: Control joint

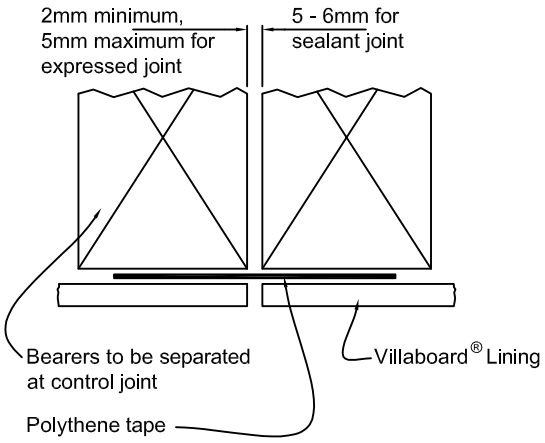

NOTE
Refer Section 5.7.3 for skillion roof design.

5.8 VILLABOARD SOFFIT AND CEILING LINING (LARGE AREAS)

For standard commercial soffits and ceilings, framing must be at 600mm maximum centres and 6mm thick Villaboard Soffit Lining can be used. For high-impact areas, heavy-use commercial areas, and high-wind areas, framing at 600mm maximum centres and 9mm thick Villaboard Soffit Lining should be used. Sheets must not be fixed to the bottom cord of roof trusses. Timber or steel ceiling battens must be fixed to the underside of the roof truss. Sheets must be laid in an offset pattern so that adjacent end joints do not coincide. Timber ceiling battens must comply with the requirements of NZS 3604 or the specific engineering design. Steel ceiling battens must be a minimum of 37mm wide x 23mm deep x 0.55mm thick and have a bearing surface of 37mm minimum. Battens must be galvanised steel (275 g/m2 zinc coating), have a suitable coating to meet the durability requirements and be fixed to the manufacturer's specifications. Refer to the flush-jointing and finishing procedures on Section 6.

For specific engineering design projects consideration must be given to framing deflections expected due to loadings and appropriate selection of sheet jointing method must be made.

NOTE
1. It is recommended that flush stopping of joints is suitable when using recessed edge Villaboard Lining.
2. When nogs not installed for perimeter support, the unsupported sheet edges across the framing must be supported by back blocking using a 300 – 400mm wide Villaboard Lining strip adhered to rear face and centred between the framing.

Figure 18: Ceiling layout

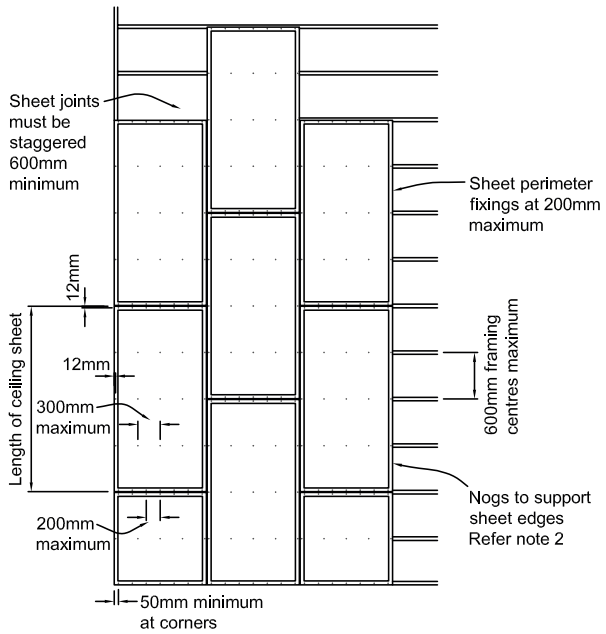

5.8.1 Control Joints

The ceilings must be divided into bays not exceeding 7.2 x 4.8m. To permit movement, control joints must be formed at the perimeter of each bay (refer Figures 19, 20, 21 and 22) and at the junction of large ceilings with narrow passage strips or where there is a change in direction (also refer Figures 20 and 21). Each bay must be independent of adjacent bays and the surrounding building structure. When the ceilings or soffits contain sloping areas then control joint centres must be reduced to coincide with the slope change lines (refer Figure 22). Framing members (to which the sheet is fixed) must not continue across this control joint. Sheets shall be fixed across the ceiling joists or ceiling battens (refer Figures 24 and 25). Figures 20 and 21 show control joints with the battens running in the same direction as the sheet joint. When these ceilings are wider than one sheet width the sheets can be fixed to the framing provided the control joints are placed to limit the bay size to 7.2m x 4.8m maximum.

ABA20220988
APPROVED - Site Copy
Hastings District Council
20/09/2022

Figure 19: Control joint layout

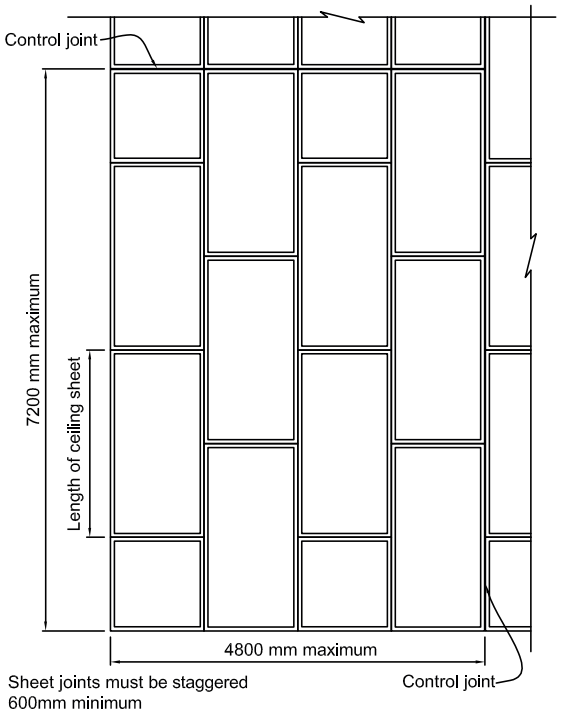

Figure 20: Steel ceiling batten control joint detail

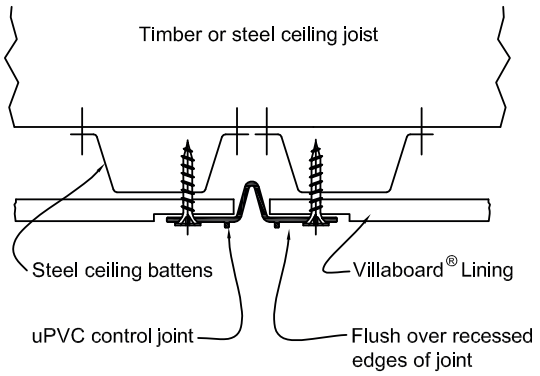

Figure 21: Timber control joint detail

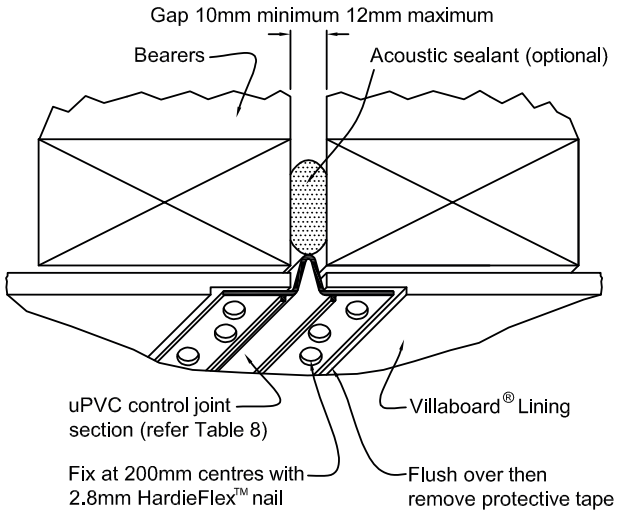

Figure 22: Directional changes to soffits and ceilings — control joint

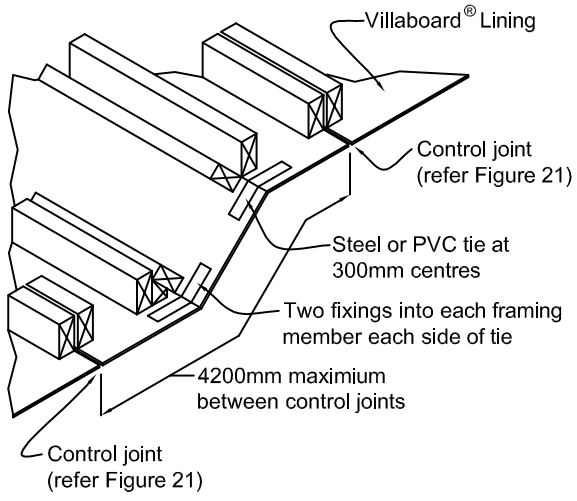

Note: Tie fixings to be 40 x 2.8mm HardieFlex™ nails.

ABA20220988
APPROVED - Site Copy
Hastings District Council
20/09/2022

Figure 23: Skillion Roof/Ceiling

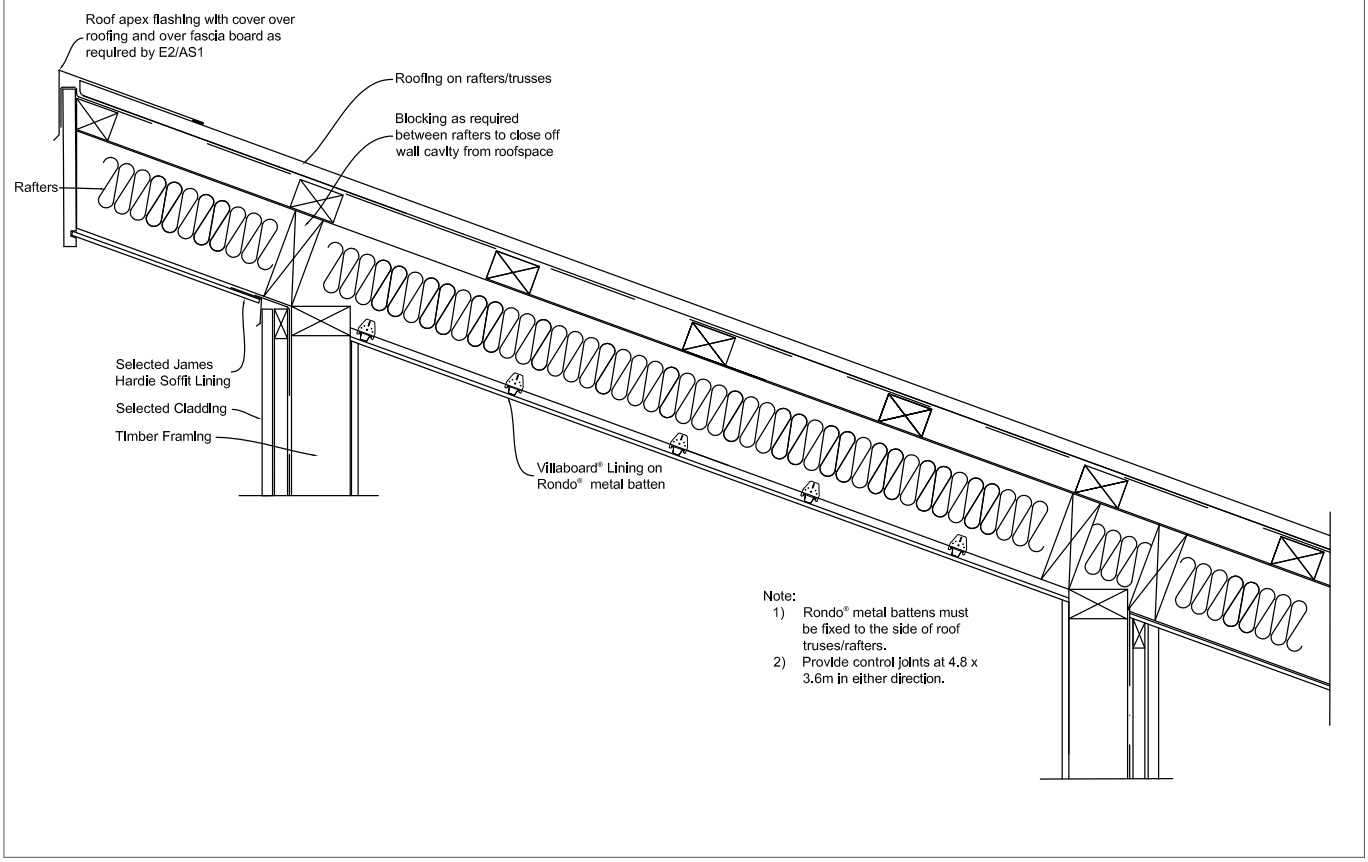

5.8.2 Skillion Roof Design

When installing soffit linings direct to skillion roof framing ensure that sufficient ventilation has been provided within the roof space. The temperatures within these smaller roof spaces can reach very high levels in certain conditions and this can cause cracking in flush stopped joints due to excessive movement in framing. Therefore the framing in skillion soffits and ceiling need a static engineering design consideration. General design guide is to provide control joints at 4.8m x 3.6m in either direction when fixing to this type of framing.

5.8.3 Fixing Option One

A smooth surface finish is obtained by minimising the visible sheet fixings. For painted finishes the combined nail or screw and adhesive method gives this superior finish (refer Figure 24). Fix at 200mm centres down each sheet end with edge fixings in each joist or batten. Double-fix in the centre of each joist or batten. Do not place nails or screws within 100mm of adhesive daubs. Daubs of wallboard adhesive 25mm diameter and 15mm thick must be applied to the intermediate joists or battens at 250mm centres (refer Figure 24). When nogs are not installed for perimeter support, the unsupported edges between ceiling joists or battens must be supported with back blocking using a 300-400mm wide Villaboard Lining strip adhered to rear face and centred between framing.

NOTES

1. All surfaces to receive adhesive must be clean, free of dust, oil etc.
2. Ensure daubs of adhesive never coincide with permanent fastener points, as adhesive shrinkage may cause fastener head protrusion.

Figure 24: Nail or screw and adhesive fixing

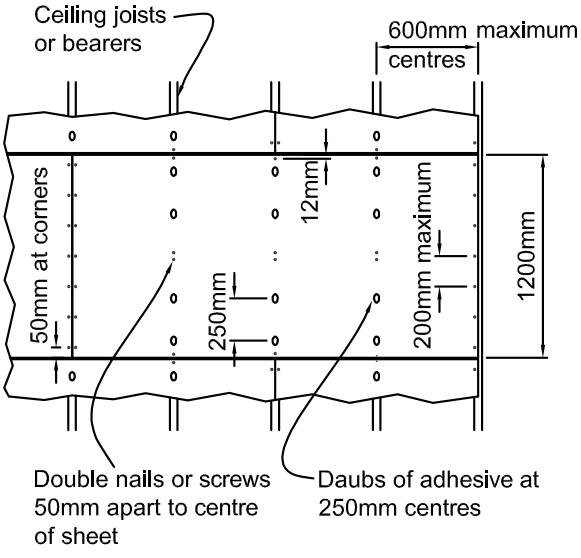

ABA20220988
APPROVED - Site Copy
Hastings District Council
20/09/2022

Figure 25: Nail or screw

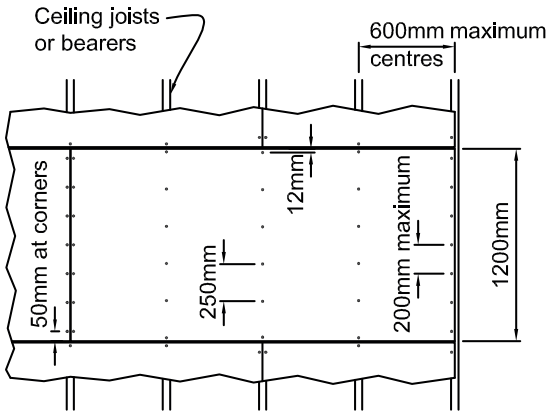

Figure 26: Nail or screw along ceiling joist (expressed or butt joints)

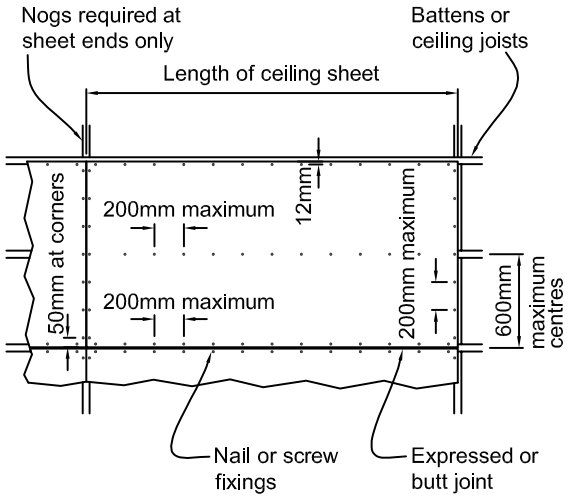

5.8.4 Fixing Option Two

For an alternative nail or screw-fixing method, fasteners are to be driven along the sheet perimeter at 200mm centres and along intermediate ceiling battens at 250mm centres (refer Figure 25).

When nogs are not installed for perimeter support, the unsupported edges between ceiling joists or battens must be supported with back blocking using a 300-400mm wide Villaboard Lining strip adhered to rear face and centred across ceiling joists.

5.8.5 Column Or Wall Abutments

Soffit sheeting must be free to move independently from the building element it abuts with. This is critical for flush-jointed sheeting, otherwise cracking at the joint may occur.

5.8.6 Square-Edge Villaboard Lining Ceilings And Soffits

Square-edge Villaboard Lining is used for butt-joint; expressed-joint or uPVC-jointed ceilings.

5.9 TITAN FACADE PANEL

May be used as soffit with expressed joint when installed as per Figure 5 and fixings as per Villaboard Soffit Lining.

5.10 INTERNAL SWIMMING POOL APPLICATION

For fixing Villaboard Lining and HardieGroove Lining in internal swimming pool areas;

- The sheets must be back and edge sealed before installation.
- When fixing Villaboard Lining to the ceiling under a skillion roof, roof ventilation must be considered to minimise thermal movement and sheet joint cracking.
- All Villaboard Lining recessed sheet joints must be stopped.
- Alternatively, when using square edge Villaboard Lining, the sheet joint must be butted over an Inseal 3259 tape with an appropriate flexible sealant in the 1mm joint.
- All HardieGroove Lining joints must have continuous bead of sealant applied to edge of sheet before butting together.

Only stainless steel fasteners must be used.

- Full perimeter fixing required.
- In addition, it is recommended that H3.1 treated timber ceiling battens are used to resist decay due to higher condensation levels present in this area.

ABA20220988
APPROVED - Site Copy
Hastings District Council
20/09/2022

5.11 SPECIAL DETAILS

Figure 27: Sloping soffit and direct fixed flatsheet cladding

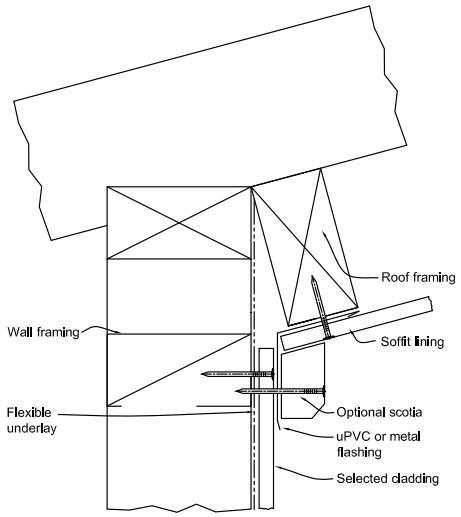

Figure 28: Sloping soffit and cavity fixed flatsheet cladding

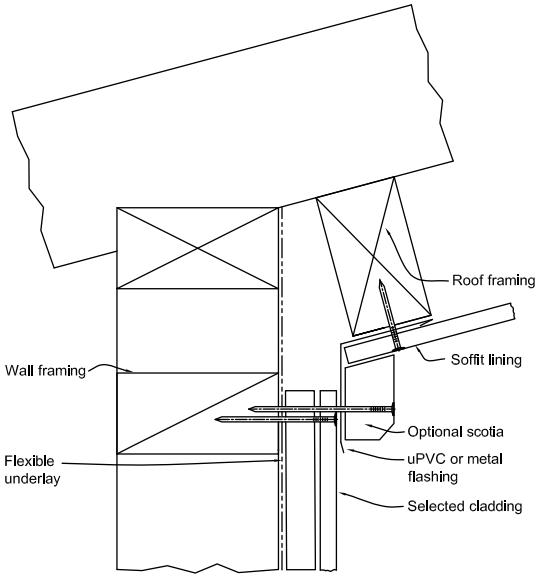

Figure 29: Sloping soffit and direct fixed weatherboard cladding

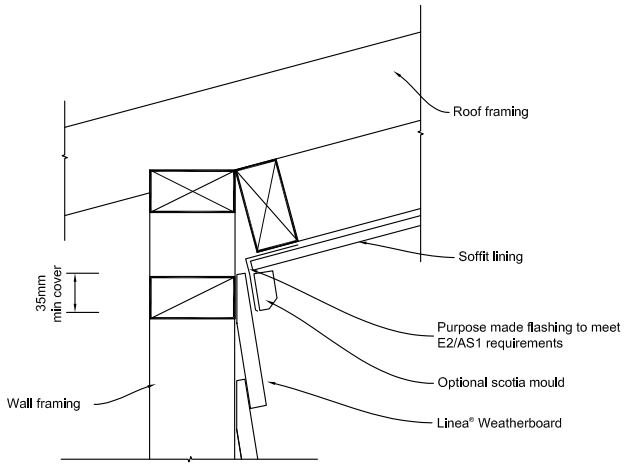

Figure 30: Sloping soffit and cavity fixed weatherboard cladding

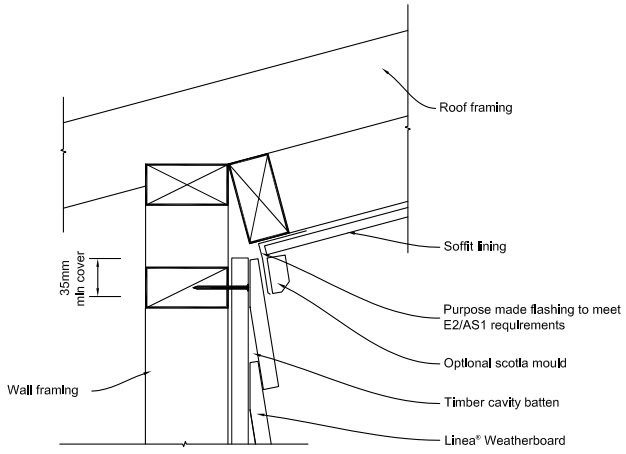

ABA20220988
APPROVED - Site Copy
Hastings District Council
20/09/2022

6 Villaboard Joint Stopping

FOR VILLABOARD LINING

6.1 GENERAL

Villaboard Soffit Lining is finished with paint complying with parts 7, 8, 9 and 10 of AS 3730. The application and maintenance must be in accordance with the manufacturer's specifications.

NOTE: Before flush stopping sheet edges must be sealed with Multiplast resin, water proofing admixture or other similar products.

6.2 GLANCING LIGHT

In some instances, due to glancing light, set joints may be noticeable in Villaboard Lining walls, especially where paint finishes have a high gloss level. Work closely with your builder or designer to minimise this.

Artificial lighting needs to be considered in relation to soffits.

Where glancing light is an issue its effect can be lessened by:

- Artificial light shading devices.
- The use of light coloured, matt finish paints.

6.3 LEVEL OF FINISHES

Different levels of finishes are typically specified for different applications. Higher levels of finishes are used to address the glancing light issues with painted Villaboard Soffit Lining referred to above. A description of the various levels of finishes and the jointing/coating requirements can be found in Table 16.

Table 16

Levels of Finishes

Level of finish	Definition*	Typical jointing/setting	Finish
0	This level of finish may be useful in temporary construction.	No stopping, taping, finishing or accessories are required. The work is confined to gluing or screwing/nailing sheets in place.	For use in areas where finishing and stopping is not considered necessary.
1	For use in plenum areas above ceilings, in areas where the work would generally be concealed, or in building service corridors and other areas not normally open to public view.	Joints and corner joints will be set with James Hardie Base Coat reinforced with perforated paper tape.	Surface free from excess jointing compound. Tool marks and ridges are generally acceptable.
2	For use in warehouse, storage or other areas where surface appearance is not of primary concern.	Joints and corner joints will be set with James Hardie Base Coat reinforced with perforated paper tape and James Hardie Top Coat.	Minor tool marks and ridges are generally acceptable.
3	For use in areas which are to receive heavy or medium texture (spray or hand applied) finishes or where heavy wall paper coverings are to be applied as the final decoration. This level of finish is not generally suitable where smooth painted surfaces or light to medium wall coverings are specified.	Joints and corner joints will be set with James Hardie Base Coat reinforced with perforated paper tape and James Hardie Top Coat.	This level of finish must be sufficiently smooth to accept heavy vinyl, tiles or textured coatings without blemishes.
4	This is generally the accepted level of finish for domestic construction. It is used where light textures or wall coverings and smooth textured finishes and satin/flat/low sheen paints are illuminated by noncritical lighting.	Refer to flush jointing recommendations on page 24. All joints and corner joints will have tape embedded in James Hardie Base Coat applied over all joints, angles, fastener heads and accessories. This application is applicable to recessed edge sheets only. The use of square edge sheets will require a high build application and coating finish.	For use where light-texture coatings or wallpaper or other lightweight wall coverings are to be applied. For painted finishes in non-critical lighting areas flat and low-sheen textured paints are to be applied. Gloss and semi-gloss paints are not generally suitable over this level of finish as any minor blemish will show under critical light. The weight, texture and sheen level or wall coverings applied over this level of finish must be carefully evaluated. Joints and fasteners must be adequately concealed if the wall-covering material is lightweight, contains limited pattern, has a gloss finish, or any combination of these features is present. Unbacked vinyl wall coverings are not suitable over this level of finish.
5	This level of finish is for use where gloss or semi-gloss paints are specified or where critical lighting conditions occur on satin, flat or low sheet paints.	Refer to page 23 steps 1–4 for jointing. Final James Hardie Base Coat application should be feathered out to approximately 200mm + each side of the joint. Then a full skim coat of James Hardie Top Coat must be applied over entire sheet surface in order to achieve a uniform finish. This application is applicable to recessed edge sheets only. The use of square edge sheets will require a high build application and coating finish.	This level of finish is for use where gloss, semigloss, low-sheen or non-textured paints are specified or where critical lighting conditions occur.

*Reference: AS/NZS 2589.1: 'Gypsum lining in residential and light commercial construction — Application and finishing. Part 1: Gypsum plasterboard'

ABA20220988
APPROVED - Site Copy
Hastings District Council
20/09/2022

6.4 PAINT FINISHES

Prior to application of paint finishes, remove any residual sanding dust and ensure the surface is suitable for paint application.

Always follow the paint manufacturer's recommendations for paint suitability, mixing and application.

NOTES

1. Use of a 'sealer coat' or 'preparation undercoat' is recommended.
2. Do not tile ceilings.

6.5 VILLABOARD SOFFIT LINING JOINTING AND STOPPING

Villaboard Soffit Lining joints are set with James Hardie jointing compounds reinforced with perforated paper tape. Recessed edge sheet joints require joint setting by using the jointing products outlined. The performance of joints is the responsibility of the installer, as this is governed by the installation practices and the standard of workmanship applied. However, James Hardie considers that the recommendations provided in Table 16 describe best practice to reduce the risk of joint cracking or other problems. There are various factors that can affect the performance of jointing compounds on edge recessed fibre cement substrates. These factors include the framing, movement, installation quality, vibrations, moisture, humidity, temperature, etc. To achieve satisfactory joint performance these factors need to be carefully considered and understood by the installer and designer when positioning joints and selecting jointing compounds. Furthermore, it is important that the jointing compound used has the physical attributes required to perform considering these factors. James Hardie compounds have been specifically developed for use with Villaboard Soffit Lining.

In addition, provision for movement needs to be made by the installation of control joints. Refer to clasue 5.7.1.

COMPOUND COVERAGE

1kg of Base Coat will provide approximately 5 lm of standard joints.

1kg of Top Coat will provide approximately 5.6 lm of standard joints.

NOTE

Follow the mixing instructions carefully when mixing James Hardie Base Coat and Top Coat.

MIXING INSTRUCTIONS

Table 17

James Hardie Base Coat Mixing Instructions

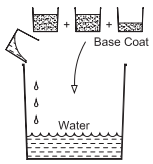

Step 1

First, add 1 part of clean water into bucket.

Then add 2½ parts James Hardie Base Coat powder

Allow to soak for 1 minute.

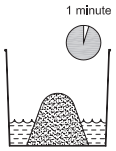

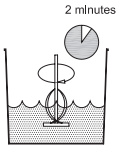

Step 2

Mix for 1½ – 2 minutes using paint mixer or equivalent. (approximately 2500-3000rpm)

James Hardie Base Coat is NOT like the plaster based compounds. Initial mixing will indicate a dry mix and further mixing **WITHOUT** further addition of water will deliver the ideal workable paste.

Warning: Inadequate or over mixing can lead to poor workability and can cause performance issues. **Do not hand mix.**

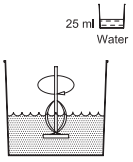

Step 3

The mix at this stage should be consistently smooth.

Based on the environmental conditions (i.e. temperature and humidity) you may add maximum of 25ml of water per 1Kg of base coat powder in the mix at this stage to adjust workability. Mix it well.

(Note: Adding excess water than the recommendation may delay the drying of base coat and may cause joint cracking due to excessive shrinkage.)

Mix should be glossy and smooth. There should be no lumps in the mix.

Important Notes:

1. Do not apply James Hardie Base Coat in temperatures above 40° C or below 5° C.
2. Allow the compounds to dry before applying the next coat. The drying time will vary between 12 to 24 hours depending upon the weather conditions.
3. Site cut and site recessed sheet edges must be sealed with an acrylic sealer e.g. Dulux Acraprime 501/1, Dulux 1 Step or similar product.
4. In corners, use James Hardie uPVC internal/external corner mould primed with Dulux Primerlock or similar. A 'GIB® Goldline™ Platinum' corner mould can also be used.
5. Use only perforated paper tapes in straight joints.
6. It is recommended that one (1) base coat bag is mixed in three (3) portions.
7. Before stopping the sheet edges, Multiplast Resin or a similar product in diluted form must be applied over the sheet edges. Mix the resin as per the manufacturers recommendations.

Product Life:

James Hardie Base Coat has a shelf life of 12 months in unopened bags when stored in a cool dry place.

James Hardie Base Coat has a bag life of 1 month if opened bags are resealed and stored in a cool dry place.

ABA20220988
APPROVED - Site Copy
Hastings District Council
20/09/2022

6.6 SET JOINTS

Step 1 — Preparation

Ensure that the recesses are clean and free of dust and contaminants. Sheet edges must be sealed with Multiplast resin, water proofing admixture or other similar products. If working conditions are hot and dry, dampen the area around the joint prior to working.

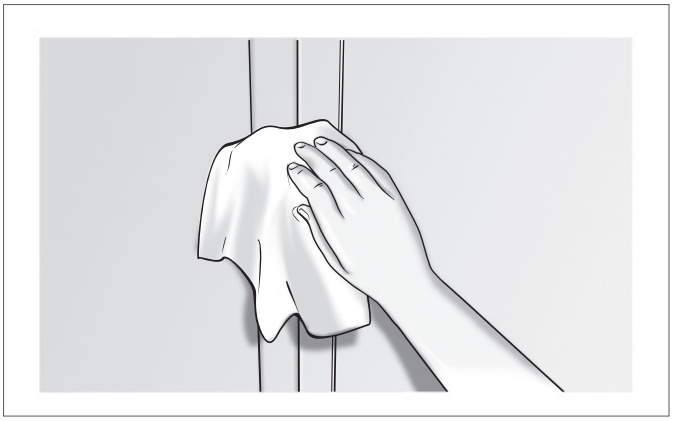

NOTE

The jointing method shown below provides a Level 4 finish. For more information about this and other finishes refer to page 21.

Step 2 — First Coat

Apply James Hardie Base Coat to fill the recess with a 150mm broad knife.

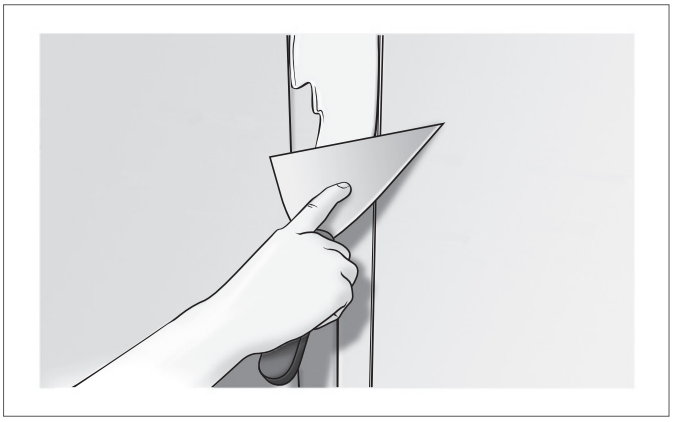

Step 3 — Embed Tape

Firmly embed the perforated paper tape centrally into the joint using a 50mm broad knife. Ensure that there are no voids under the tape and remove excess compounds.

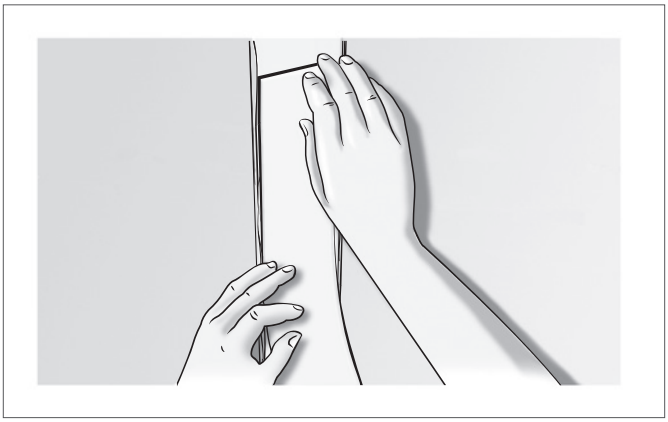



Step 4 — Thin Layer

Immediately cover tape with a thin layer of James Hardie Base Coat applied with a 150mm broadknife.

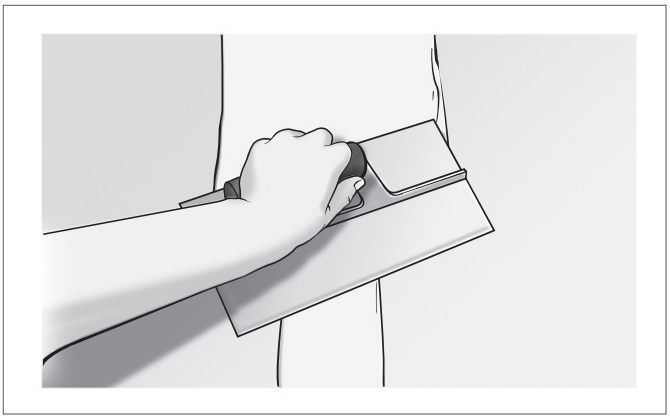

NOTE

Steps 5, 6 and 7 are only required for paint and wall paper finish.

ABA20220988
APPROVED - Site Copy
Hastings District Council
20/09/2022

Step 5 — Second Coat

When the first coat is fully dry, use a 200mm wide second coat trowel to apply the James Hardie Base Coat. Apply this coat approximately 180mm wide, laid down over the recess and feather the edges.

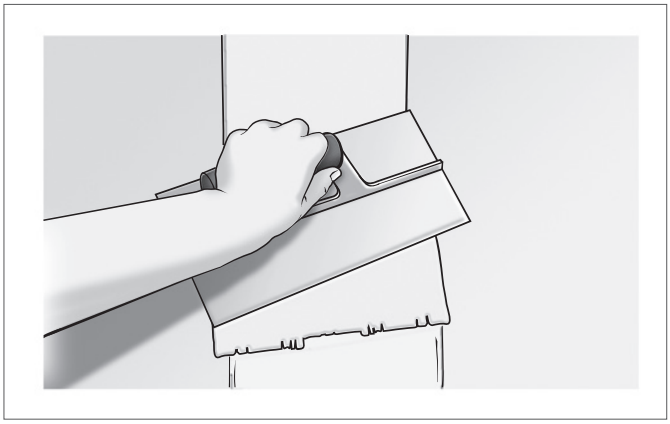

Step 6 — Finishing Coat

Ensure the second coat is fully dry. Using a finishing trowel, apply a coat of James Hardie Top Coat 280mm wide centrally over the joint and feather out the edges. Allow to dry fully before sanding. Sand with a 180 grit sand paper to achieve a smooth finish for painting.

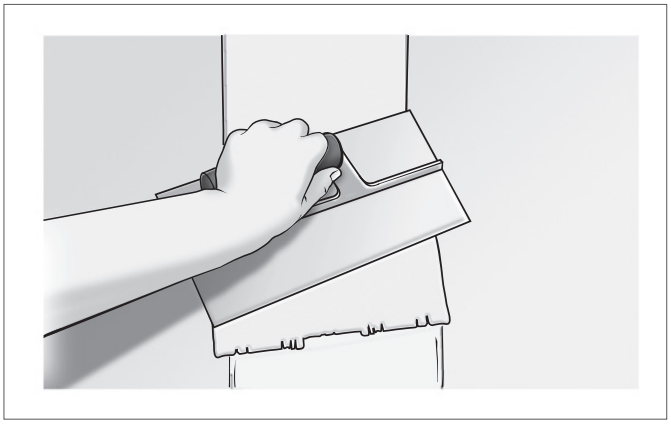

Step 7 — Fastener Heads

Apply a finishing coat of James Hardie Base Coat to fastener heads, feathering out the edges. Allow to fully dry before sanding.

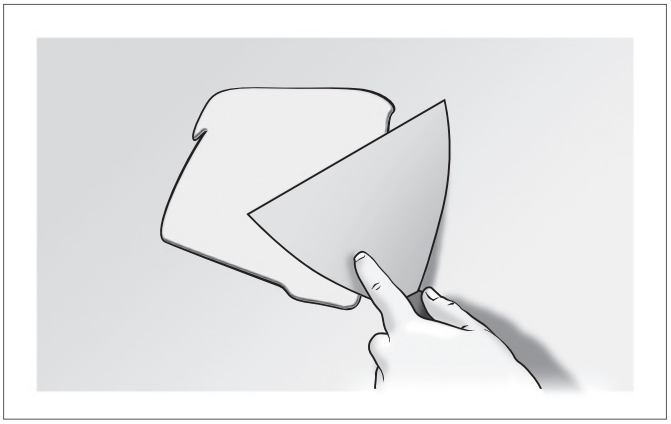

7.1 PAINTING

HardieSoffit Lining, HardieFlex Eaves Lining, Villaboard Soffit Lining and HardieGroove Soffit Lining sheets are to have a minimum of two coats of acrylic paint applied after fixing in order to meet the requirements of the NZBC. All sheets must be coated within 3 months of installation.

Use quality 100% acrylic paints. Economy paints are not recommended because generally they are less well bound, less moisture resistant and more prone to mould growth.

In all cases the manufacturer's specification for the selected paint must be followed. Note that some paints require an undercoat before applying finish coats.

Damp, shady situations, proximity to bush, agricultural paddocks or seaspray environments may induce an extra tendency to mould growth. Use mould-inhibiting and alkaline-resistant undercoats and consult the paint manufacturer for details of maximum mould-resistant paints.

Before painting, remove any surface grime or other contaminants and ensure the HardieSoffit Lining, HardieFlex Eaves Lining, Villaboard Soffit Lining and HardieGroove Soffit Lining is dry. Paint must not be applied when the air temperature is below 10˚C.

When using uPVC moulds avoid dark colours (paints must have light reflection of 40% or more) as excessive movement may cause buckling of the uPVC when exposed to direct sunlight.

Enamel-based paints can be used, utilising a three-coat system.

For full details apply to the selected paint manufacturer before commencing the work.

ABA20220988
APPROVED - Site Copy
Hastings District Council
20/09/2022

8 Product information

8.1 GENERAL

HardieSoffit Lining, HardieFlex Eaves Lining, Eclipsa Eaves Lining, HardieGroove Soffit Lining and Villaboard Soffit Lining are a cellulose fibre reinforced cement building product. The basic composition is Portland cement, ground sand, cellulose fibre and water.

HardieSoffit Lining, HardieFlex Eaves Lining, Eclipsa Eaves Lining, HardieGroove Soffit Lining and Villaboard Soffit Lining is manufactured to AS/NZS 2908.2 'Cellulose-Cement Products Part 2: Flat Sheets' (ISO 8336 'Fibre Cement Flat Sheets').

James Hardie New Zealand is an ISO 9001 'Telarc' certified manufacturer. HardieSoffit Lining, HardieFlex Eaves Lining, Eclipsa Eaves Lining, HardieGroove Soffit Lining and Villaboard Soffit Lining are classified Type A, Category 3 in accordance with AS/NZS 2908.2 'Cellulose-Cement Products'.

For Safety Data Sheets (SDS) visit www.jameshardie.co.nz or Ask James Hardie on 0800 808 868.

8.2 DURABILITY

Resistance to moisture/rotting

HardieSoffit Lining, HardieFlex Eaves Lining, Eclipsa Eaves Lining, HardieGroove Soffit Lining and Villaboard Soffit Lining has demonstrated resistance to permanent moisture induced deterioration (rotting) and has passed the following tests in accordance with AS/NZS 2908.2:

- Heat rain (Clause 6.5)
- Water permeability (Clause 8.2.2)
- Warm water (Clause 8.2.4)
- Soak dry (Clause 8.2.5)

8.3 FINISHES

HardieSoffit Lining, HardieFlex Eaves Lining, Eclipsa Eaves Lining, HardieGroove Soffit Lining and Villaboard Soffit Lining must be paint finished within 90 days of their installation. Refer to the paint manufacturer for paint suitability, mixing and application.

8.4 GROUP NUMBER CLASSIFICATION

HardieGroove Lining and Villaboard Lining have a 'Group Number' classification of 1 – S as per the requirements of Clause C of the NZBC.

9 Maintenance

It is the responsibility of the specifier to determine normal maintenance requirements for eaves and soffits to comply with NZBC Acceptable Solution B2/AS1. The extent and nature of maintenance will depend on the geographical location and exposure of the building. As a guide, it is recommended that basic normal maintenance tasks shall include but not be limited to:

- Washing down exterior surfaces every 6-12 months*,
- Pre-painted soffits, such as Eclipsa Soffit Lining, when used in harsh costal environments, the soffit must be washed down using a hose and soft brush minimum once every four months in addition to the other maintenance requirements*,
- Re-applying exterior protective finishes**,
- Maintaining the exterior envelope and connections including joints, penetrations, flashings and sealants,
- Cleaning out gutters, blocked pipes and overflows as required,
- Pruning back vegetation close to or touching the building.

* Do not use a water blaster to wash down the soffits.

**Refer to your paint manufacturer for washing down and recoating requirements related to paint performance.

ABA20220988
APPROVED - Site Copy
Hastings District Council
20/09/2022

Notes

ABA20220988
APPROVED - Site Copy
Hastings District Council
20/09/2022

Notes

ABA20220988
APPROVED - Site Copy
Hastings District Council
20/09/2022

Notes

ABA20220988
APPROVED - Site Copy
Hastings District Council
20/09/2022

Product Warranty

James Hardie®

EAVES AND SOFFITS

August 2017

All James Hardie eaves and soffit linings come with a 15 year product warranty. Pre-finished products such as Eclipsa Eaves Lining come with a 10 year coating warranty and 15 year warranty on the base sheet. All accessories supplied by James Hardie are warranted for a period of 15 years. For full warranty details visit www.jameshardie.co.nz or Ask James Hardie on 0800 808 868.

Disclaimer: The recommendations in James Hardie's literature are based on good building practice, but are not an exhaustive statement of all relevant information and are subject to conditions (c), (d), (f) and (g) in each products warranty under "Conditions of Warranty". James Hardie has tested the performance of the HardieSoffit™ Lining, HardieFlex™ Eaves Lining, Eclipsa™ Eaves Lining, HardieGroove™ Lining and Villaboard® Soffit Lining, and when installed in accordance with the HardieSoffit™ Lining, HardieFlex™ Eaves Lining, Eclipsa™ Eaves Lining, HardieGroove™ Lining and Villaboard® Soffit Lining installation manual, in accordance with the standards and verification methods required by the New Zealand Building Code (NZBC) and those test results demonstrate the product complies with the performance criteria established by the NZBC. However, as the successful performance of the relevant system depends on numerous factors outside the control of James Hardie (e.g. quality of workmanship and design) James Hardie shall not be liable for the recommendations made in its literature and the performance of the relevant system, including its suitability for any purpose or ability to satisfy the relevant provisions of the NZBC, regulations and standards, as it is the responsibility of the building designer to ensure that the details and recommendations provided in the relevant James Hardie installation manual are suitable for the intended project and that specific design is conducted where appropriate.

ABA20220988
APPROVED - Site Copy
Hastings District Council
20/09/2022

James Hardie
a smarter way™



Copyright August 2017. © James Hardie New Zealand. TM and ® denotes a Trademark or Registered Mark owned by James Hardie Technology Limited.

ABA20220988
APPROVED - Site Copy
Hastings District Council
20/09/2022

7.3 WALLS

Design Deflection Limits:

D.L.	L.L.
SPAN/300	SPAN/360
OR 10 mm	OR 10 mm

TABLE 14: LINTELS – UPPER/SINGLE STOREY

Section D x B (mm)	Product	Light Roof And Ceiling Roof Load Width 'RLW' (m)									
		1.8	2.4	3.0	3.6	4.2	4.8	5.4	6.0	6.6	7.2
		Maximum Span (m)									
90 x 45	hyCHORD®	1.7	1.5	1.3	1.2	1.1	1.1	1.0	1.0	0.9	0.8
2/90 x 45	hyCHORD	2.3	2.0	1.8	1.7	1.5	1.5	1.4	1.3	1.3	1.2
140 x 45	hyCHORD	2.7	2.5	2.4	2.3	2.1	2.0	1.8	1.8	1.7	1.6
150 x 45	hySPAN®	3.0	2.8	2.7	2.5	2.4	2.4	2.3	2.1	2.0	2.0
150 x 63	hySPAN	3.2	3.0	2.9	2.7	2.6	2.5	2.5	2.4	2.4	2.3
2/140 x 45	hyCHORD	3.2	3.0	2.8	2.7	2.6	2.5	2.5	2.4	2.4	2.3
150 x 90	hy90®	3.2	3.0	2.9	2.7	2.6	2.5	2.5	2.4	2.4	2.3
170 x 45	hySPAN	3.3	3.1	2.9	2.8	2.7	2.6	2.5	2.4	2.4	2.4
190 x 45	hyCHORD	3.4	3.2	3.0	2.9	2.8	2.7	2.6	2.5	2.5	2.4
2/150 x 45	hySPAN	3.5	3.3	3.1	3.0	2.9	2.8	2.7	2.6	2.6	2.5
200 x 45	hySPAN	3.7	3.5	3.3	3.1	3.0	2.9	2.8	2.8	2.7	2.6
2/170 x 45	hySPAN	3.8	3.6	3.4	3.3	3.2	3.1	3.0	2.9	2.8	2.8
200 x 63	hySPAN	4.0	3.7	3.5	3.4	3.3	3.2	3.1	3.0	2.9	2.9
2/190 x 45	hyCHORD	4.0	3.7	3.5	3.4	3.3	3.2	3.1	3.0	2.9	2.9
200 x 90	hy90	4.0	3.7	3.5	3.4	3.3	3.2	3.1	3.0	2.9	2.9
240 x 45	hySPAN	4.2	4.0	3.8	3.6	3.5	3.3	3.3	3.2	3.1	3.0
2/200 x 45	hySPAN	4.4	4.1	3.9	3.7	3.6	3.5	3.4	3.3	3.2	3.1
240 x 63	hySPAN	4.6	4.3	4.1	3.9	3.7	3.6	3.5	3.4	3.4	3.3
240 x 90	hy90	4.6	4.3	4.0	3.9	3.7	3.6	3.5	3.4	3.4	3.3
2/240 x 45	hySPAN	5.0	4.7	4.5	4.2	4.1	4.0	3.8	3.7	3.7	3.6
300 x 45	hySPAN	5.0	4.8	4.5	4.2	4.1	4.0	3.8	3.7	3.7	3.6 ■
240 x 90	hyONE®	5.2	4.9	4.7	4.5	4.3	4.1	4.0	3.9	3.8	3.7
300 x 90	hy90	5.3	5.0	4.8	4.6	4.5	4.3	4.2	4.1	4.0	3.9
300 x 63	hySPAN	5.4	5.1	4.8	4.6	4.5	4.3	4.2	4.1	4.0	3.9
360 x 45	hySPAN	5.7	5.3	5.1	4.9	4.8	4.6	4.5	4.3	4.2 ■	4.0 ■
2/300 x 45	hySPAN	5.8	5.4	5.2	5.0	4.9	4.8	4.6	4.5	4.4	4.2

■ Indicates minimum bearing at end supports = 90 mm
- Minimum bearing at end supports 45 mm, except where indicated otherwise
- Double sections built-up by vertical lamination – see section 5.4

ABA20220988
APPROVED - Site Copy
Hastings District Council
20/09/2022

5.2 GIB AQUALINE® WET AREA SYSTEMS

This section covers the installation of GIB Aqualine® Wet Area Systems. Full information can be found in the GIB Aqualine® Wet Area Systems literature.

GIB Aqualine®

GIB Aqualine®, with its green face paper, has a water resistant core which will provide resistance to the effects of moisture in wet areas such as bathrooms and laundries.

Although able to cope with infrequent short-term exposure, standard gypsum plasterboard will have a shortened life expectancy when frequently exposed to water or moisture.

The NZBC does not call for water resistant linings in wet areas but it is highly desirable to incorporate lining materials which will maintain their integrity longer when exposed more frequently to water or steam and particularly to one-off events such as leakages or flooding of a room.

Limitations

- Do not use GIB Aqualine® in situations where it is exposed for extended periods to humidities of 90% RH or greater. Such areas include group shower rooms, as well as moisture and chlorine laden environments such as indoor heated swimming pools
- GIB Aqualine® must not be installed in exterior situations
- GIB Aqualine® must not be directly applied to solid plaster (gypsum or cement) wood based sheet linings or similar materials, masonry or concrete. GIB Aqualine® may only be applied to these materials where timber strapping or steel furring channels are installed
- GIB Aqualine® must not be installed over a vapour barrier or a wall acting as a vapour barrier
- GIB Aqualine® must not be used for bracing purposes in shower cubicles or over baths

NZBC Clauses E3 Internal Moisture

E3.3.4 requires impervious and easily cleaned surfaces to all surfaces adjacent to sanitary fixtures or laundering facilities.

E3.3.5 requires that surfaces of building elements likely to be splashed or contaminated in the course of the intended use of the building, must also be impervious and easily cleaned.

E3.3.6 requires that surfaces of building elements likely to be splashed must be constructed in a way that prevents water from penetrating behind linings or into concealed spaces (e.g. wall cavities).

Walls in wet areas therefore need to be addressed according to whether they fall within the scope of one of the following descriptions:

1. Wall surface likely to be splashed
2. Wall surfaces directly exposed to water e.g. shower walls

Although not a requirement of NZBC it is highly recommended that the wall surfaces within 150mm of the top edge of a bath, and the vertical faces immediately under the edge of a bath, are treated in the same way as for a shower wall.

ABA20220988
APPROVED - Site Copy
Hastings District Council
20/09/2022

5.2.1 Surface in Showers and Around Baths

A waterproof membrane complying with AS/NZS 4858 MUST be applied to all lining materials used under ceramic tiles in these areas.

The waterproof membrane must extend to a 1500mm horizontal radius from a shower rose unless the shower is contained within a fixed enclosure. A shower curtain does not constitute a fixed enclosure.

Particleboard flooring manufacturers recommend that in wet areas, panels should be protected with a suitable wet area membrane or an integrally waterproof sheet material. Some local authorities call for this treatment on all timber based floors. Local requirements should be checked before proceeding.

Dark grey shaded areas in the diagrams below represent the minimum extent of wall surfaces requiring impervious sheet materials or waterproof membranes prior to tiling. Light grey shaded areas represent best practice.

Enclosed shower over bath

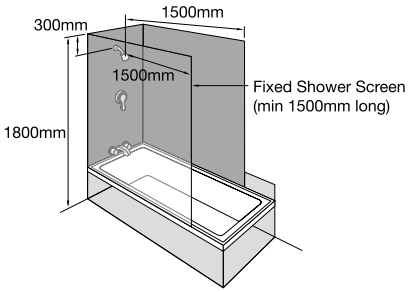

Unenclosed shower over bath

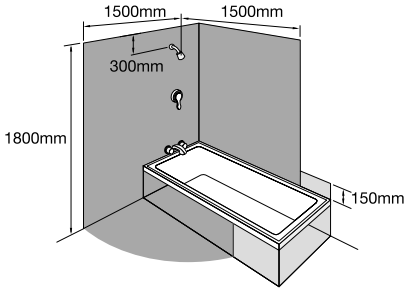

Enclosed Shower

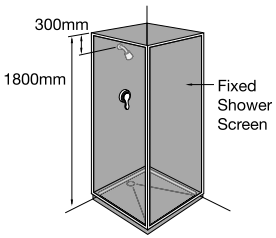

Unenclosed shower

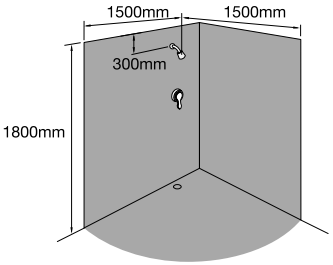

Bath

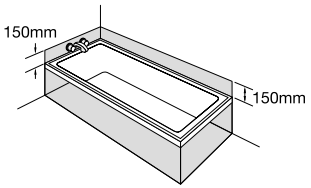

Code requirements

Best practice

ABA20220988
APPROVED - Site Copy
Hastings District Council
20/09/2022

5.2.2 Fixing Details for Non Tiled Walls

As for general installation details (see p. 38–41)

Ceilings

Battens or ceiling joists shall be spaced at 450mm centres maximum for 10mm GIB Aqualine® and 600mm centres maximum for 13mm GIB Aqualine®.

Ceiling Fixing

Fixing as for GIB® Standard plasterboard (see p. 45)

Jointing

All sheet joints must be GIB® tape reinforced and stopped in accordance with instructions on p. 83.

5.2.3 Fixing Details for Tiled Walls

Wall Framing

Timber Framing dimensions and spacings must comply with the requirements of NZS 3604:2011.

Prior to lining in tiled areas (shower cubicles and shower over bath only) the internal corners shall be reinforced with a minimum 32mm x 32mm angle such as NZ18 or GIBFix® Angle. Each side of the angle shall be fastened to the framing with 30mm galvanised clouts at 300mm centres (see p. 74).

Steel stud systems are proprietary but do not generally incorporate nogs except as required below:

- Adjacent to each pipe penetration and behind sink and tub flashings
- Between all studs above bath flanges and preformed shower bases
- To support towel rails, grab rails and wall basin brackets
- For impact protection in shower cubicles or shower over bath situations it is important that all sheet joints are made on solid blocking. This may either require vertical fixing of the GIB Aqualine® or the installation of some additional nogs

Lining and Tile Weights

- 10mm or 13mm GIB Aqualine® is recommended for use on timber or steel framing and for tile weights up to 20kg/m^2
- 13mm GIB Aqualine® must be used for tile weights between 20 and 32kg/m^2 and when steel framing has been used
- GIB® Grabber® Drywall Screws at 100mm centres to perimeter of tiled wall and to all intermediate studs
- For 10mm GIB Aqualine® use minimum 25mm x 6g GIB® Grabber® Drywall Screws
- For 13mm GIB Aqualine® use minimum 32mm x 6g GIB® Grabber® Drywall Screws
- GIB Aqualine® may be fixed vertically or horizontally
- Provide a 5mm–10mm gap at the wall/floor junction
- Provide a 5mm–10mm gap between the bottom edge of the GIB Aqualine® and any bath rim or preformed shower base to allow for placement of sealant
- GIB Aqualine® sheets shall be touch fitted
- Where the framing or fastener centres required for tiled GIB Aqualine® are closer than those specified for GIB® Fire Rated and GIB Noise Control® Systems, the GIB Aqualine® specification shall prevail. Where relevant check fastener lengths comply with requirements of GIB® Fire Rated Systems
- Do not fix tiles to GIB® plasterboard ceilings or non-vertical planes

Jointing

- Jointing shall be carried out in accordance with instructions on p. 85
- No joint compound is required under impervious shower linings
- Air drying compounds shall not be used on areas that are to be tiled

Fastening the Linings – Horizontal Fixing in Tiled Areas

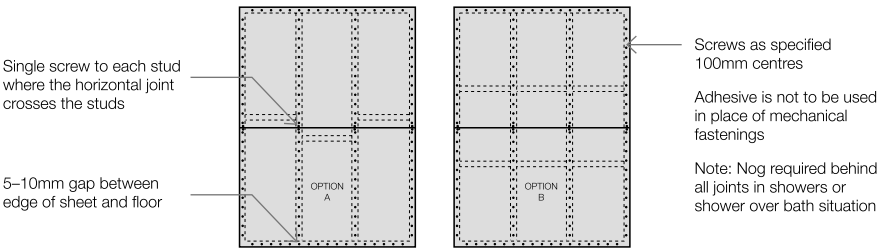

ABA20220988
APPROVED - Site Copy
Hastings District Council
20/09/2022

5.2.4 Tiling, Flexible Sheet Vinyl and Rigid Sheet Shower Linings

Tiling

- Tile grouting and sealing shall be carried out in accordance with the requirements of AS3958.1 2007 (Guide to the Installation of Ceramic Tiles)
- Provide for surface control joints at 4m centres maximum
- The adhesive shall be organic based complying with AS2358 – 1990 (Adhesives for Fixing Ceramic Tiles)
- Note that the adhesive should be combed in a horizontal direction only. It is important that adhesive is applied to the wall and not "buttered" onto individual tiles

Flexible Sheet Vinyl – Showers and Other Wet Areas

- GIB Aqualine® is a suitable substrate for flexible vinyl wall finishes in wet areas of residential, commercial or institutional buildings
- Framing requirements and installation procedures for the GIB Aqualine® substrate shall be as per p. 72, except that the lining gap at the floor is reduced to 5mm when a pencil cove detail is used
- The installation of metal reinforcing angles (minimum. 32 x 32 x 0.55mm) behind internal GIB Aqualine® corners is recommended for sheet vinyl applications in showers or shower over bath situations (see illustration p. 74)
- The GIB Aqualine® lining must be jointed and stopped to a paint quality finish (Level 4) – trowel marks can telegraph through even a commercial grade 2mm vinyl
- A minimum vinyl thickness of 2mm is recommended for the wall finish in commercial or institutional bathrooms and showers
- In areas directly exposed to liquid water, all joints in flexible sheet vinyl must be heat welded
- Installation of the flexible vinyl must be carried out strictly in accordance with the specifications provided by the suppliers/ manufacturers of the vinyl

Rigid Sheet Shower Linings

- The manufacturers/suppliers of thin (usually 2mm–3mm) and rigid acrylic shower linings commonly recommend direct adhesive fixing to wall linings using solvent-based adhesives
- Do not pre-seal areas which are to be covered by the rigid shower linings
- Some suppliers of rigid sheet acrylic shower linings recommend a minimum of one week for the adhesive to cure fully prior to use
- Water temperature changes will cause movement of the thin acrylic sheet, which in turn will stress the adhesive and wall lining substrate
- Care must be taken to ensure that rooms are adequately ventilated and the adhesive is fully cured before the shower is used
- Consult the manufacturer/supplier of the shower lining for full installation details

Waterproof Membranes (tiled shower areas and shower over baths)

- In showers and shower over bath situations the GIB Aqualine® system is not complete and ready for tiling until coated with a waterproof membrane over the lining and the jointed areas
- Only in-situ waterproofing materials which are manufactured to AS/NZS 4858:2004 Wet Area Membranes Requirements are recommended.
- Waterproof membranes must be fully cured and dry prior to application of tiling adhesives
- Embed reinforcing mats in the membrane at all internal corners of the shower (including floor/wall junctions)

For further information on waterproof membranes prior to tiling, consult BRANZ GOOD PRACTICE GUIDE TILING.

ABA20220988
APPROVED - Site Copy
Hastings District Council
20/09/2022

FIG. B: Typical Details for Tiled Shower over Bath

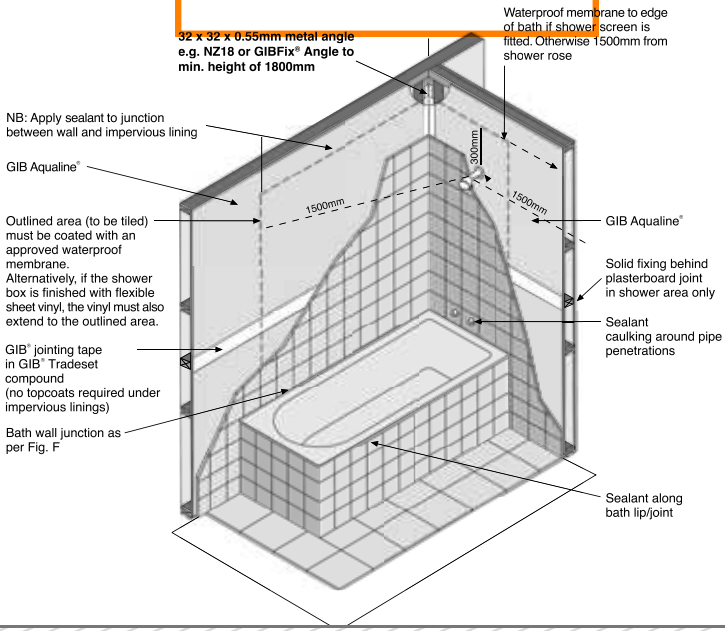

FIG. C: Typical Details for Tiled Shower Enclosure

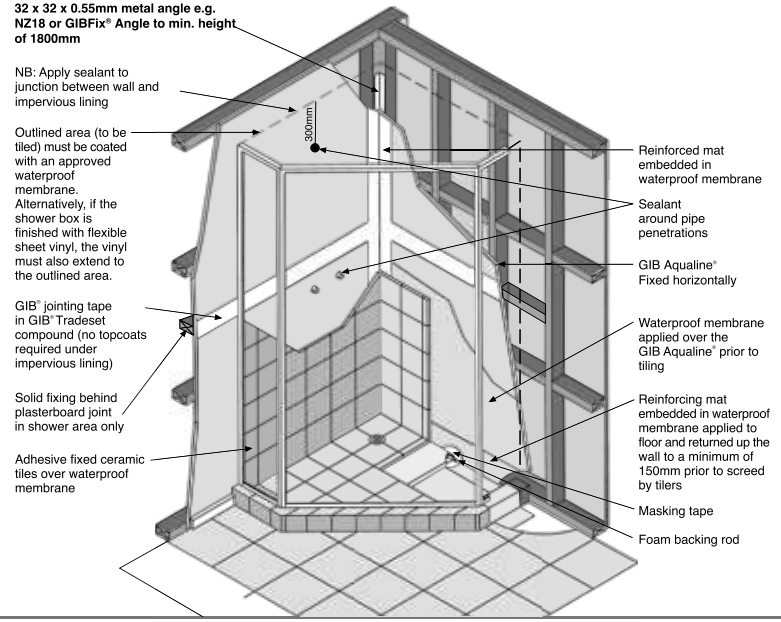

ABA20220988
APPROVED - Site Copy
Hastings District Council
20/09/2022

FIG. D: Typical shower edge detail

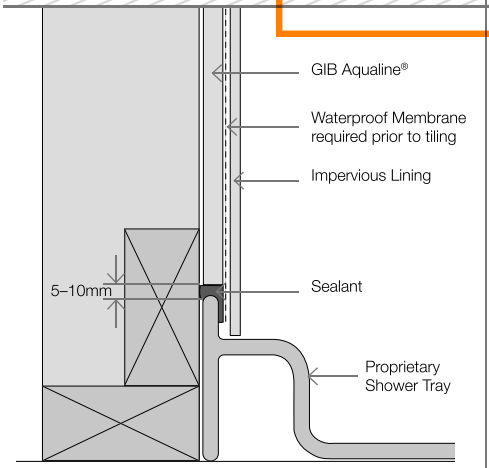

FIG. E: Typical shower edge detail in fire or noise control area

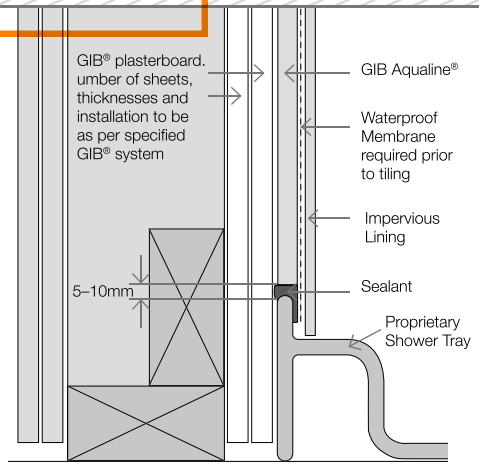

FIG. F: Typical bath edge detail

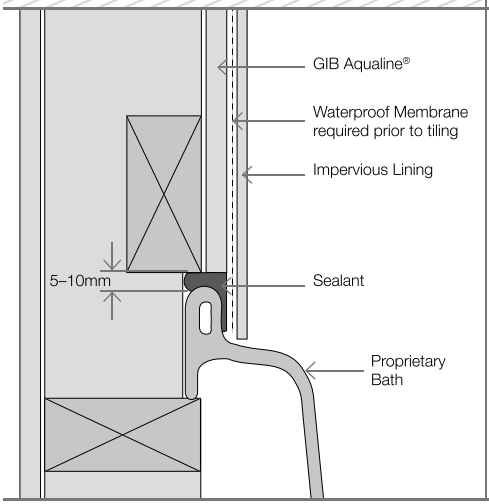

FIG. G: Typical bath edge detail in fire or noise control area

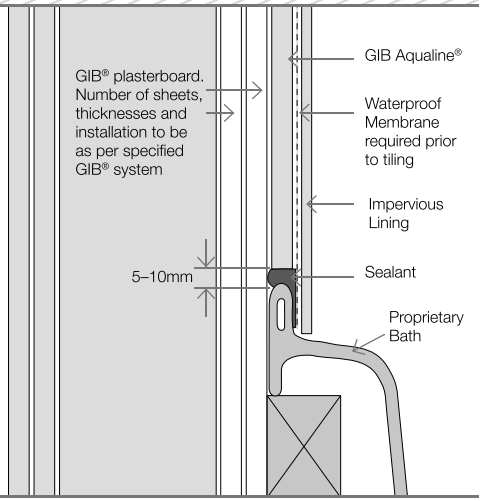

As the edge profiles of showers and baths can vary significantly between manufacturers, these details are intended only as a guide. Attention should be paid to ensure that:

- Sufficient sealant to effect a waterproof barrier has been used
- The sealant has been applied in a manner that does not permit water ingress

Note: The gap between the front face of the shower/bath upstand and the front face of the GIB Aqualine® should be 1mm–4mm. This may require additional packing behind final layer of GIB Aqualine® OR checking shower tray or bath into framing.

Silicone sealants must be of the mould inhibiting type and must be compatible with GIB Aqualine®, shower/bath surfaces and the impervious lining.

ABA20220988
APPROVED - Site Copy
Hastings District Council
20/09/2022

5.2.5 Typical Construction Details

It is recommended that GIB Aqualine® is fixed to ceilings in wet areas such as bathrooms and laundries. Installation is the same as for standard ceiling. See p. 45.

FIG. H: Typical Plumbing Penetration

Penetrations in wet areas should be sealed with silicon sealant to prevent moisture access to the framing.

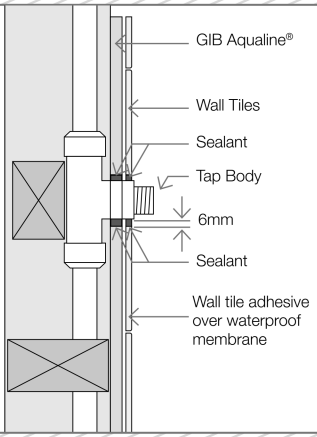

FIG. I: Sealing Under Mixer Facia

Apply a bead of sealant behind the cover plate on shower mixer to divert any water from the penetration.

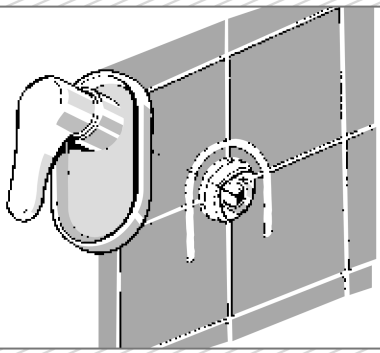

FIG. J: Tiled Shower – Internal Corner Detail

Edge profiles of baths and shower trays can vary significantly between manufacturers. Always follow the manufacturers installation instructions.

The details shown are intended as a guide only.

Allow 5mm–10mm gap between bath rim and/or shower base to allow for installation of sealant.

Sealants should contain a mould inhibitor.

Ensure that the gap is well filled with sealant.

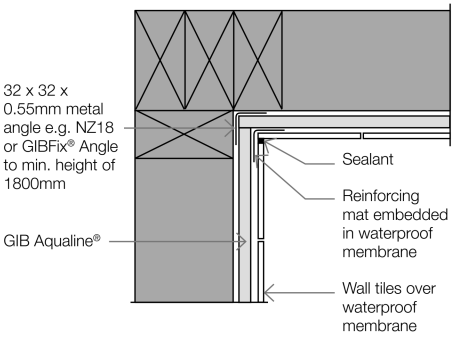

ABA20220988
APPROVED - Site Copy
Hastings District Council
20/09/2022

GIB®

Wet Area Systems

Specification and installation manual



CBI 5113
FEBRUARY 2021

ABA20220988
APPROVED - Site Copy
Hastings District Council
20/09/2022

NATIONAL SUPPORT

VISIT: Winstone Wallboards Limited
37 Felix Street, Penrose,
Auckland 1061, New Zealand
POST: PO Box 12 256, Penrose,
Auckland 1642, New Zealand
PHONE: +64 9 633 0100
EMAIL: info@gib.co.nz
WEB: gib.co.nz

GIB® HELPLINE

0800 100 442

ABA20220988
APPROVED - Site Copy
Hastings District Council
20/09/2022

RESIDENTIAL AND NON-RESIDENTIAL APPLICATIONS. BATHROOMS, LAUNDRIES, TOILETS AND KITCHENS.

Protection from internal moisture is an important consideration when designing interior lining systems for homes, multi-unit apartments, educational, healthcare and commercial applications.

The New Zealand Building Code sets out minimum standards for wet area spaces in residential dwellings. However, often higher levels of performance and protection from internal moisture is demanded.

The GIB® Wet Areas System specification and installation manual provides internal lining options and details for specifiers, builders and building owners.

USE ONLY THE CURRENT SPECIFICATION

This manual supersedes the publication GIB Aqualine® Wet Area Systems March 2007. Winstone Wallboards Ltd accepts no liability for reliance upon publications that have been superseded.

If you are unsure whether this is the current publication, call the GIB® Helpline on 0800 100 442 or go to gib.co.nz

BEWARE OF SUBSTITUTION

The performance of GIB® Wet Area Systems requires accurate design detailing and construction practices. All GIB® Systems have been developed specifically for New Zealand conditions and independently tested, assessed or appraised, to ensure the required level of performance. It is important to use GIB® components where specified and to closely follow the specified design details and construction practices, to be confident that the required level of performance and quality is achieved on site.

BRANZ Appraised
Appraisal No.427 [2021]

ABA20220988
APPROVED - Site Copy
Hastings District Council
20/09/2022

CONTENTS

Introduction	**5**
Design considerations	**6-11**
Where to use GIB® Wet Area linings	6
Benefits	6
Handling and storage	6
Limitations	6
Board substitution options	7
Penetrations and sealants	8
Renovations	8
Maintenance	8
Compliance with the NZ Building Code	9-11
Installation	**12-17**
Non-tiled walls – Timber Framing	12
Non-tiled walls – Steel Framing	13
Tiled walls – Timber Framing	14
Tiled walls – Steel Framing	15
Metal angles and maximum tile weights	16
Ceilings	17
Construction Details	**18-30**
Limitations	31
Use only the current specification	31
Substitution	31
Trademarks	31
Copyright	31

ABA20220988
APPROVED - Site Copy
Hastings District Council
20/09/2022

This publication

This publication is a best practice guide to the design and construction of wall and ceiling linings in wet areas with intermittent water exposure within residential and non-residential buildings, as covered by NZ Building Code Clause E3 Internal Moisture.

The information is designed to be helpful to designers, contractors and home-owners wishing to achieve a result that is easy to incorporate into modern design, simple and clear to construct, and that will satisfy the needs, requirements and expectations of both the NZ Building Code and the end user.

Wet areas in the home often require relatively frequent and expensive renovation or repair, often because of the ingress of water to the structure of the building.

To form a complete wet area system it is important to specify compatible materials and systems, designed to cope with conditions that are common in wet areas, and to ensure correct installation using best practice.

WET AREAS

Generally, wet areas are described as spaces to where fresh water is reticulated, such as bathrooms, toilets, laundries and kitchens. Within wet areas the following requirements apply;

1. NZBC Clause E3.3.4 states that wall surfaces adjacent to sanitary fixtures or sanitary appliances must be impervious and easily cleaned.
2. NZBC Clause E3.3.6 states that surfaces of building elements likely to be splashed must be constructed in a way that prevents water splash from penetrating behind linings or into concealed spaces.

NZ Building Code Clause E3 also refers to other requirements not covered in this publication, such as ventilation, condensation control and overflow management. Ongoing maintenance of wet areas is also important to maximise service life.

GIB AQUALINE®, GIB TOUGHLINE® AQUA AND GIB WEATHERLINE®

Although able to cope with infrequent short-term exposure, standard gypsum plasterboard will have a shortened life expectancy when frequently exposed to water or a high moisture environment.

The NZ Building Code does not call for water resistant linings in wet areas but it is desirable to specify lining materials which will maintain their integrity longer when exposed more frequently to moisture, and to one-off events such as leaks or flooding.

GIB Aqualine®, GIB Toughline® Aqua and GIB Weatherline® feature a water-resistant polymer impregnated core, designed for wet area applications. These core formulations not only resist penetration of moisture through the lining into the framing behind, but also resist water “wicking” up the core, a common cause of long-term damage where a water-resistant lining has not been used.

WATER ABSORPTION TEST

The illustrations below show how GIB Aqualine®, GIB Toughline® Aqua and GIB Weatherline® compare with standard plasterboard after soaking for two-hours in green dye.



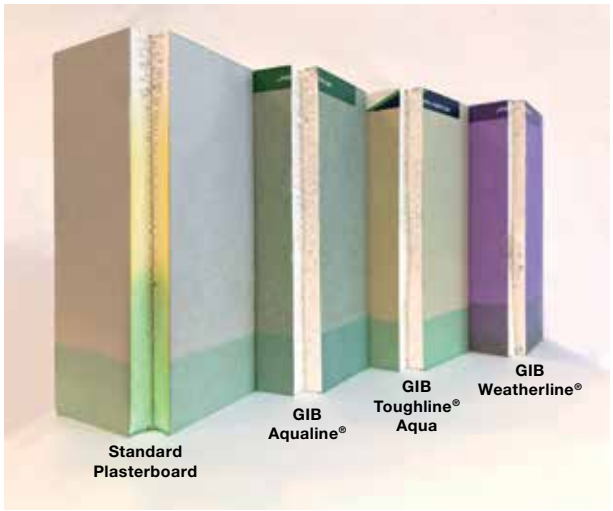

ABA20220988
APPROVED - Site Copy
Hastings District Council
20/09/2022

WHERE TO USE GIB® WET AREA LININGS

In order to prolong the life expectancy of the space it is highly desirable to include wet area linings in situations where there is an increased risk of water or moisture damage. Applications include walls and ceilings in bath and shower rooms, and walls in laundries, toilets and kitchens.

BENEFITS

- Water resistant and durable linings help protect against water damage
- Proven substrate for paint, wallpaper, waterproofing membranes, tiles, sheet vinyl and rigid sheet shower linings
- Suitable for both residential and non-residential applications
- Dimensionally stable and an excellent substrate for ceramic tiles
- Conventional jointing methods
- Easy to cut and form openings
- Contains glass fibres and other additives to increase strength and fire resistance
- May be used in GIB® Bracing, GIB® Fire Rated and GIB Noise Control® Systems (see Compliance with the NZ Building Code, Clauses B1, C3 and G6). Consult the appropriate GIB® literature for installation details

HANDLING AND STORAGE

- GIB® plasterboard must be stored under cover, stacked flat and clear of the floor with sufficient support to avoid sagging
- GIB® plasterboard must be handled as a finishing material

LIMITATIONS

- GIB® wet area linings must not be used for bracing purposes in shower cubicles or above baths. For more information refer to page 9 of this manual
- Do not use GIB® wet area linings where exposed for extended periods to humidity levels above 90% RH, such as in group shower or steam rooms, or where exposed to moisture and chlorine rich environments such as in indoor swimming pools
- GIB® wet area linings used in a bathroom or other high humidity environment must not be directly applied to solid plaster (gypsum or cement), wood-based sheet linings or similar materials, masonry or concrete, without strapping or steel furring channels
- GIB® wet area linings must not be installed over a vapour barrier or a wall acting as a vapour barrier
- Cracked or damaged sheets must never be used
- GIB Aqualine® or GIB Toughline® Aqua must not be used in external applications
- GIB® plasterboard must not be exposed to temperatures in excess of 52°C for prolonged periods. Heat-generating devices may include halogen lighting, cooking elements, radiant heating, solid fuel exhausts and fire surrounds. Consult the appliance manufacturer for installation details

Table 1: GIB® Wet Area linings sheet dimensions and weights

Product	Sheet face colour	Thickness (mm)	Sheet width (mm)	Edge Type	Sheet length (mm)						Max. Weight (kg/m²)
					2400	2450	2700	3000	3600	4800	
GIB Aqualine®	Green	10	1200	TE/TE	■		■	■	■		8.0
			1200	TE/SE	■					■	
			1350	TE/SE	■				■		
		13	1200	TE/TE	■		■	■	■		11.0
GIB Toughline® Aqua	Mauve	13	1200	TE/TE	■		■	■			11.4
GIB Weatherline®	Purple	10	1200	SE/SE		■	■	■			9.0
		13	1200	SE/SE			■	■			11.5

ABA20220988
APPROVED - Site Copy
Hastings District Council
20/09/2022

BOARD SUBSTITUTION OPTIONS

Acceptable GIB Aqualine® alternatives	
10mm GIB Aqualine® can be replaced with:	10mm GIB Weatherline® 13mm GIB Toughline® Aqua
13mm GIB Aqualine® can be replaced with:	13mm GIB Weatherline® 13mm GIB Toughline® Aqua

GIB® Wet Area System construction details in this manual refer to the use of GIB Aqualine®, GIB Toughline® Aqua and GIB Weatherline® sheets may also be used in place of GIB Aqualine®.

FLEXIBLE SHEET VINYL – SHOWERS AND OTHER WET AREAS

- GIB Aqualine®, GIB Toughline® Aqua and GIB Weatherline® are suitable substrates for flexible vinyl wall finishes in wet areas of residential, commercial or institutional buildings
- Framing requirements and installation procedures are presented in this literature, except that the lining gap at the floor is no more than 5mm when a pencil cove detail is used
- The installation of galvanised steel reinforcing angles behind internal lining corners is recommended for sheet vinyl applications in showers or shower over bath situations
- The lining must be jointed and stopped to a paint quality finish (Level 4) – trowel marks can telegraph even through a commercial grade 2mm vinyl
- A commercial grade vinyl is recommended in commercial or institutional bathrooms and showers
- In areas directly exposed to liquid water, all joints in flexible sheet vinyl must be heat welded
- Installation of flexible vinyl must be carried out strictly in accordance with the specifications provided by the suppliers/ manufacturers of the vinyl

RIGID SHEET SHOWER LININGS

- The wall surface must be free of dust before installation of the lining
- Avoid lining joints as much as possible and where necessary flush with plaster to achieve a level surface
- Do not preseal or paint areas which are to be covered by the rigid shower linings
- The suppliers of thin (usually 2-3mm) and rigid acrylic shower linings commonly recommend direct adhesive fixing to wall linings using solvent-based adhesives
- Care must be taken to ensure that rooms are adequately ventilated
- Water temperature changes will cause movement of the thin acrylic sheet, which in turn will stress the adhesive and wall lining substrate
- Consult the supplier of the shower lining for full installation details
- Suppliers of rigid sheet acrylic shower linings recommend a minimum of 24 hours for the adhesive to cure fully prior to the shower being put into service

WATERPROOF MEMBRANE SYSTEMS AND TILING

- A waterproof membrane system must be applied to lining materials used as a substrate for ceramic tiles in a shower or shower over bath situation
- The wall surface in a shower or shower over bath situation is not complete and ready for tiling until coated with a waterproof membrane system over the lining and once penetrations for shower mixers, taps and associated fittings are sealed
- The installation of galvanised steel reinforcing angles behind internal lining corners is required for tiled wall applications in showers or shower over bath situations
- In-situ waterproofing membrane materials manufactured to AS/NZS 4858:2004 “Wet Area Membranes” are recommended and must be applied to manufacturer’s recommendations. Typically, these types of membrane systems are not suitable for paint and wallpaper finishes
- Waterproof membrane systems must be fully cured and dry prior to application of tiling adhesives
- Preformed sheet membranes are also available and may be more suitable where curing times or specialist skills are an issue
- The details shown in this manual are generic in nature. For accurate detailing, follow the specifications provided by the supplier of the proprietary waterproof membrane system

For further information on tiling consult the BRANZ Good Practice Guide – Tiling.

ABA20220988
APPROVED - Site Copy
Hastings District Council
20/09/2022

PENETRATIONS AND SEALANTS

As leaks and water ingress typically occur at junctions between building elements and at penetrations, it is essential that particular attention is given to these details at the time of installation. Lack of attention to detail can result in water damage that could remain undetected for a long time.

- Ensure that all cut-outs for pipe penetrations are made neatly, and slightly oversize, with a hole saw. These penetrations should be of a diameter no more than 12mm greater than that of the pipe
- Ensure shower mixer and tap penetrations are sealed with a proprietary flange system to prevent the passage of moisture into the wall cavity
- Sealants should be of a mould inhibiting type and be paintable. Neutral cure silicones will generally meet these requirements
- Surfaces should be dry and free from dust before application, a minimum of a 4mm joint width provided and the depth should not exceed the width
- Apply a bead of sealant to the full depth of the lining in the following locations:
  - Around all tap/pipe bodies
  - The gap between the bath rim and the bottom edge of the wet area lining
  - Between the upstand of preformed shower bases and the bottom edge of the lining
  - Where an impervious junction is required at the floor/wall line, carefully seal the gap between the bottom edge of the board and the finished floor. Leave a 5-10mm gap at the bottom of the wall lining for this purpose, ensuring the gap is free from dirt and dust
- Do not locate shower heads or taps on fire rated or intertenancy walls. Should this be unavoidable always use tested and approved proprietary penetration seals

RENOVATIONS

Bathrooms, kitchens and laundries are the most renovated rooms in the house, partly due to fashion considerations and partly because of damage sustained by ingress of water and moisture.

When renovating these rooms it is often easier and more cost-effective to remove the existing linings and replace them. This allows for a new start in the room and offers sound substrates for new surfaces such as tiling and painting, where otherwise flaking paint or damaged plasterboard may compromise good and sound finish or practice. At the very least re-lining will:

- Allow for inspection of framing where damage may have occurred and provide the opportunity to repair such damage
- Allow plumbing and electrics to be checked and altered or replaced where required
- Provide the opportunity to install thermal and acoustic insulation, water-resistant linings, and propriety plumbing penetration flange systems where appropriate
- Make the job easier

MAINTENANCE

Lack of maintenance is frequently the cause of premature and often expensive failure of components and building elements within wet areas.

It is important to regularly inspect and repair any potential problem before it becomes expensive to reinstate. Good maintenance should include:

- Ongoing ventilation. At the very least, good passive ventilation (e.g. window vents); but good active ventilation (e.g. extraction fans) of an appropriate size for the room is recommended
- Impervious coatings and surfaces should be checked for wear and damage and maintained and re-coated before ingress of water to the substrate occurs
- Regular cleaning with appropriate cleaners so that build-up of matter, such as mould, is well controlled
- Sealants at junctions and penetrations should be checked for adhesion on a regular basis and replaced where adhesion failure to substrates occurs
- Where pipe leaks have become evident, however small, they should be repaired promptly and any area around such leaks dried out completely before any other repairs are carried out

ABA20220988
APPROVED - Site Copy
Hastings District Council
20/09/2022

Compliance with the NZ Building Code

STRUCTURE – CLAUSE B1

The design and material specification for steel and timber framing used in GIB® Wet Area systems must be in accordance with the performance requirements of NZ Building Code Clause B1 (Structure).

Bracing elements are required to have a durability of 50 years. GIB® bracing elements are not to be located in shower cubicles or behind baths because of durability requirements, the likelihood of renovation, and practical issues associated with fixing bracing elements to perimeter framing members, such as at bath and shower tray locations.

Otherwise, GIB® Bracing Systems can be used in water-splash areas, provided these are maintained impervious for the life of the building.

GIB Aqualine®, GIB Toughline® Aqua and GIB Weatherline® can be used in place of GIB® Standard plasterboard in GIB® bracing elements. They can also be used in place of GIB Braceline® in GIB® bracing elements 900mm or longer, provided the perimeter of the element is fixed with GIB® Grabber 32mm x 6g screws at 100mm centres, using the GIB Braceline® corner fixing pattern. Refer to the GIB® Bracing System literature.

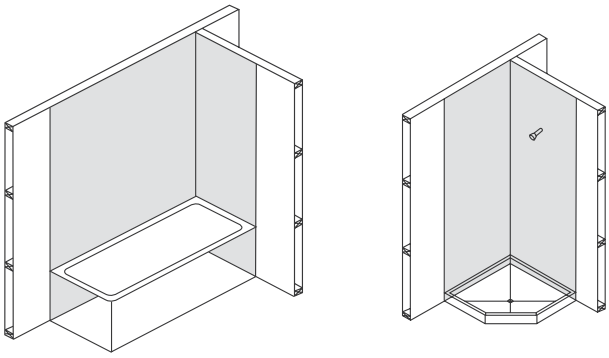

No bracing in the shaded areas.

DURABILITY – CLAUSE B2

When installed and maintained in accordance with this literature, GIB® Wet Area systems tiled or vinyl covered have a serviceable life of at least 15 years. They comply with the requirements of NZ Building Code Clause B2 (Durability) for use in wet areas directly exposed to liquid water, e.g. showers, showers over baths and splash-backs.

When used as a general wet area lining and maintained under normal dry internal conditions, GIB® Wet Area Systems have a serviceable life of at least 50 years and comply with NZ Building Code Clause B2 (Durability) for use within toilets, kitchens, bathrooms and laundries not directly exposed to liquid water.

FIRE AFFECTING AREAS BEYOND THE SOURCE – CLAUSE C3

GIB® Fire Rated Systems provide passive fire protection in accordance with the requirements of NZ Building Code Clause C3. When GIB Aqualine® or GIB Toughline® Aqua is substituted into fire rated systems in place of the equivalent thickness GIB Fyreline®, the Fire Resistance Rating (FRR) of that system will be maintained.

The protection of combustible surfaces surrounding gas cooking appliances is covered by the latest version of AS/NZS 5601.1.

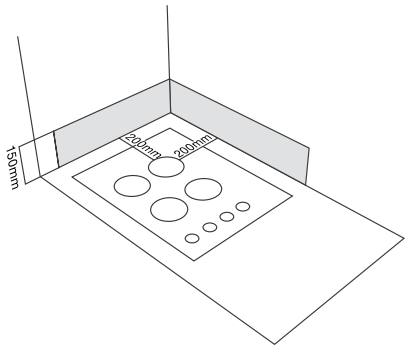

As a guide the following options are acceptable for wall surfaces within 200mm of the periphery of a gas element to a height of 150mm above the element for the full dimension (width and depth) of the cooktop surface area:

- 5mm tiles on GIB® plasterboard
- 5mm toughened glass on GIB® plasterboard
- or any system that can be demonstrated to meet the specific requirements of AS/NZS 5601.1

GIB® plasterboard products must not be exposed to temperatures in excess of 52°C for sustained periods. Check with the appliance manufacturer that this requirement will be met. It would be unusual for surfaces outside 200mm to exceed 52°C for sustained periods.

ABA20220988
APPROVED - Site Copy
Hastings District Council
20/09/2022

INTERNAL MOISTURE – CLAUSE E3

The New Zealand Building Code Clauses that relate to wall surfaces are;

E3.3.4 - Wall surfaces adjacent to sanitary fixtures or sanitary appliances must be impervious and easily cleaned.

E3.3.5 - Surfaces of the building elements likely to be splashed or become contaminated in the course of the intended use of the building, must be impervious and easily cleaned.

E3.3.6 - Surfaces of building elements likely to be splashed must be constructed in a way that prevents water splash from penetrating behind linings or into concealed spaces.

New Zealand Building Code Acceptable Solution E3/AS2 substantially refers to the Waterproof Membrane Association Incorporated (WMAI) Code of Practice for Internal Wet Area Membrane Systems (IWAM), August 2020.

The IWAM Code of Practice refers to wet area membranes and over-surfaces that are easy to clean and suggests an extent as outlined below for a typical bathroom application. For further details refer to the IWAM Code of Practice which also lists suitable rigid sheet materials and tiling membranes.

Shaded areas in the diagrams below represent the minimum extent of wall surfaces requiring impervious sheet materials or waterproof membrane systems prior to tiling.

Enclosed shower over bath

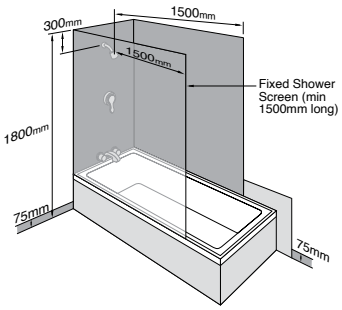

Unenclosed shower over bath

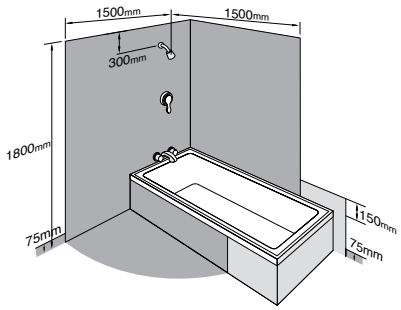

Unenclosed shower

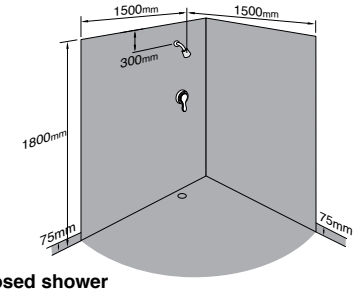

Bath

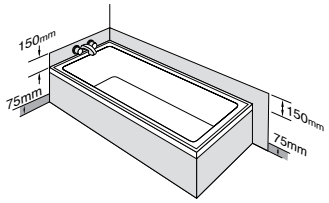

Enclosed shower

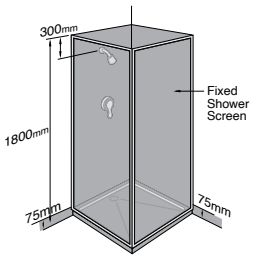

ABA20220988
APPROVED - Site Copy
Hastings District Council
20/09/2022

HAZARDOUS BUILDING MATERIALS – CLAUSE F2

At no stage during its serviceable life does GIB Aqualine® constitute a health hazard. It therefore meets the provisions of NZ Building Code Clause F2 (Hazardous Building Materials). Dust resulting from the sanding of stopping compounds may be a respiratory irritant and the use of a suitable facemask is recommended.

VENTILATION – CLAUSE G4

NZ Building Code Clause G4 (Ventilation) requires buildings to have a means of collecting or otherwise removing steam generated from laundering, utensil washing, bathing or showering. To prolong the life of interior linings and surface finishes and to minimise the risk of moisture related problems such as condensation and mould growth, adequate heating, thermal insulation and mechanical ventilation must be provided in kitchens, bathrooms and laundries.

AIRBORNE AND IMPACT SOUND – CLAUSE G6

GIB® Noise Control Systems can be used to provide ratings for Sound Transmission Class (STC) and Impact Insulation Class (IIC) in accordance with the requirements of NZ Building Code Clause G6 (Airborne and Impact Sound). When GIB Aqualine®, GIB Toughline® Aqua or GIB Weatherline® is substituted into GIB® Noise Control systems in place of the equivalent thickness GIB® Standard plasterboard or GIB Fyreline®, the STC and IIC rating of that system will be maintained. When GIB Aqualine®, GIB Toughline® Aqua or GIB Weatherline® is substituted in place of the equivalent thickness GIB Noiseline®, a small performance loss may occur. For further information refer to the GIB Noise Control® Systems literature or contact the GIB® Helpline 0800 100 442.

ABA20220988
APPROVED - Site Copy
Hastings District Council
20/09/2022

TIMBER WALL FRAMING

Framing dimensions must comply with the requirements of NZS 3604:2011.

- The moisture content of timber framing shall be 18% or less at the time of lining
- Studs shall be spaced at 600mm centres maximum for both 10mm and 13mm GIB® plasterboard
- Nogs to be evenly spaced with a maximum spacing of 1350mm. Alternatively, nogs may be staggered 150mm maximum either side of a horizontal joint line
- Nogs are not required behind horizontal joints except in shower situations or specific fire or noise control systems

FASTENERS

- Minimum 32mm x 6g GIB® Grabber® High Thread screws.

FASTENER CENTRES

- 300mm centres to top and bottom plates and to perimeter studs
- Single fasteners to each stud where the horizontal joint crosses the studs
- Place fasteners 12mm from sheet edges and 18mm from sheet ends
- Daubs of GIBFix® adhesive at 300mm centres to intermediate studs
- Do not place adhesive at sheet edges or under fasteners. Sheet edges at door or window openings can be adhesive fixed unless forming part of the perimeter of a bracing element

For bracing, noise control or fire rating applications including fastener lengths consult the relevant GIB® technical publication.

LINING

- Use minimum 10mm GIB® plasterboard
- Install the sheets leaving a 5-10mm gap at the floor line to allow for movement of the framing members and to allow for cleaning dirt and rubbish before sealing
- Sheets to be touch fitted.

JOINTING

- Jointing shall be carried out in accordance with the instructions in the GIB® Site Guide.

Fastening the Linings – Horizontal Fixing Only

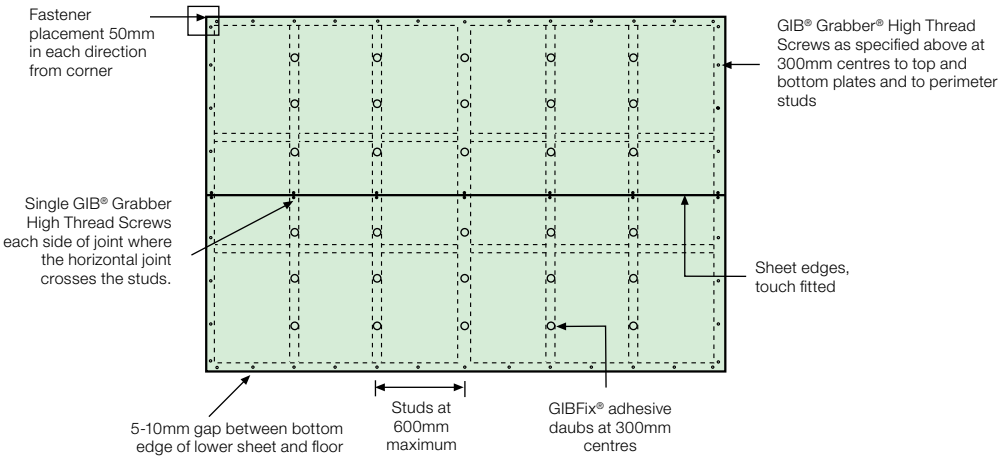

Fastening the Linings – Vertical Fixing Only

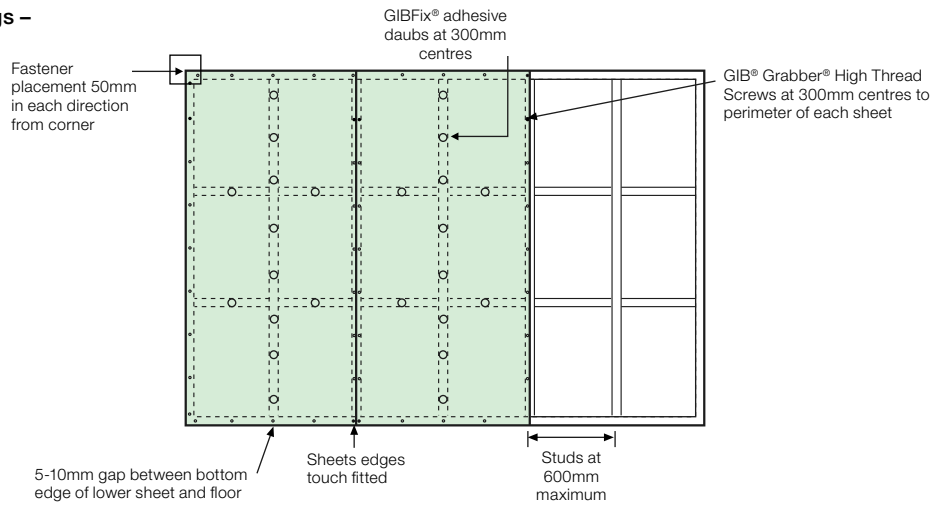

ABA20220988
APPROVED - Site Copy
Hastings District Council
20/09/2022

STEEL WALL FRAMING

The minimum sheet thickness for fixing on light gauge 0.55mm base metal thickness (BMT) steel framing is 13mm GIB® plasterboard. For bracing, noise control or fire rating applications consult the relevant GIB® technical publication.

Steel frame for residential construction is in accordance with NZBC B1/AS1 9.1 NASH Standard Part 2 Light Steel Framed Buildings, or by specific design. 10mm GIB plasterboard is commonly used on minimum 0.75mm BMT residential steel framing.

FASTENERS

— Minimum 25mm x 6g GIB® Grabber® Self Tapping Screws.

FASTENER CENTRES

— 300mm centres to top and bottom channels and to end studs

— Single screws to each stud where the horizontal joint crosses the studs

— Place fasteners 12mm from sheet edges and 18mm from sheet ends

— Daubs of GIBFix® All-Bond adhesive or screws at 300mm centres to intermediate studs

— Do not place adhesive at sheet edges or under fasteners.

— Sheet edges at door or window openings can be adhesive fixed.

For bracing, noise control or fire rating applications including fastener lengths consult the relevant GIB® technical publication.

LINING

— Lay the sheets, leaving a 5-10mm gap at the floor line. Note: If friction fitted steel studs have been used, sheets must be fitted hard to the floor. Ensure floor is cured and dry

— Sheets to be touch fitted.

JOINTING

— Jointing shall be carried out in accordance with the instructions in the GIB® Site Guide

Fastening the Linings – Horizontal Fixing Only

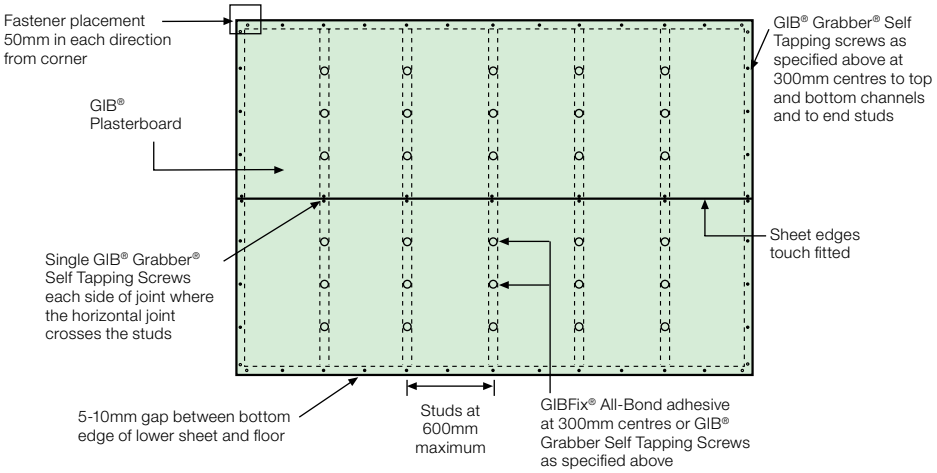

Fastening the Linings – Vertical Fixing Only

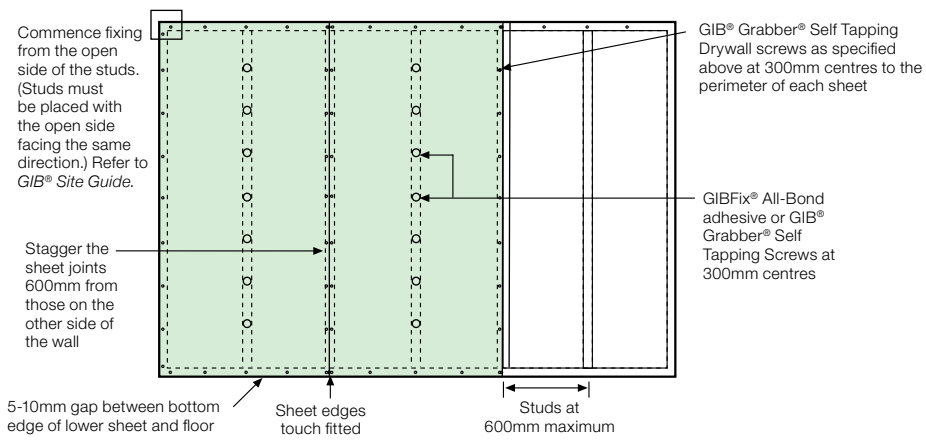

ABA20220988
APPROVED - Site Copy
Hastings District Council
20/09/2022

TIMBER WALL FRAMING

Framing dimensions and spacing must be appropriate for the tile weight and comply with the requirements of NZS 3604:2011 Timber Framed Buildings, or relevant specific design Standard.

NOGS

For impact protection in shower cubicles or shower over bath situations it is important that all sheet joints are made on solid framing. This may require vertical fixing or the installation of additional nogs. Also provide nogs:

- Adjacent to each pipe penetration and behind sink and tub flashings
- Between all studs above bath flanges and preformed shower bases

CORNER REINFORCING

- Prior to lining in tiled areas (shower cubicles and shower over bath only) the internal corners shall be reinforced with a minimum
- 32 x 32 x 0.55mm NZ18 or 45 x 45 x 0.55mm GIBFix® Angle. Each leg shall be fastened to the framing at 300mm centres

FASTENERS

- Minimum 32mm x 6g GIB® Grabber® High Thread Screws

FASTENER CENTRES

- 150mm centres to perimeter of wall and all intermediate studs
- Adhesive is not to be used in place of mechanical fasteners
- Place fasteners 12mm from sheet edges and 18mm from sheet ends
- Single fasteners to each stud where the horizontal joint crosses the studs
- Where relevant, fastener lengths must comply with the requirements of GIB® Fire Rated Systems or GIB® Noise Control Systems

For bracing, noise control or fire rating applications including fastener lengths consult the relevant GIB® technical publication.

LINING AND TILE WEIGHTS

- Use minimum 10mm GIB® plasterboard
- For maximum permitted tile weights refer to pg 16 of this manual
- GIB® Wet Area linings may be fixed vertically or horizontally
- Sheets are touch fitted
- Provide a 5-10mm gap at the wall/floor junction and between the bottom edge of the lining and any bath rim or preformed shower base to allow for placement of sealant
- Do not tile on the resilient side of GIB Rail® or STWC Acoustic Clip (ST001) and channel noise control system
- GIB® Wet Area linings are suitable for tiling full height of walls, but if a wall is to be partially tiled (e.g. half high), only the area of wall under the tiles needs to be fixed as required for tiled areas. The remainder of the wall may be fixed as for non-tiled areas

JOINTING

- Jointing shall be carried out in accordance with the instructions of the GIB® Site Guide

Fastening the Linings – Horizontal Fixing Only

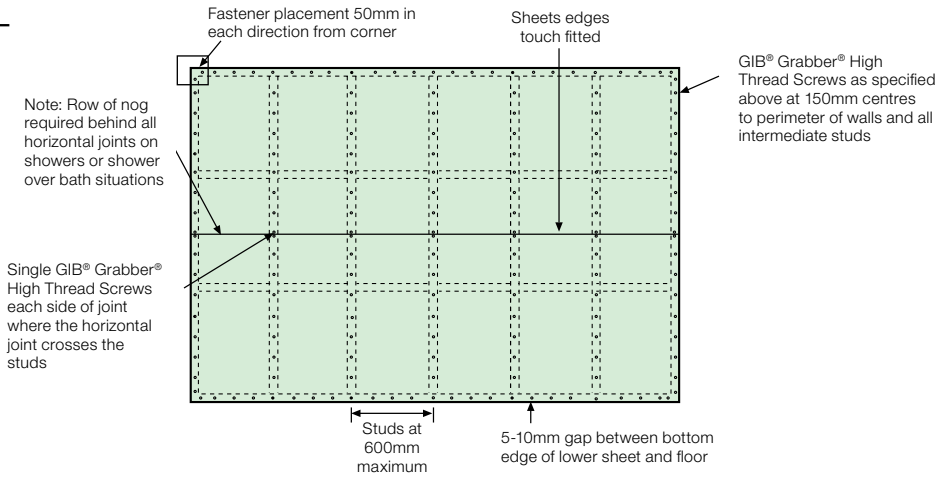

Fastening the Linings – Vertical Fixing Only

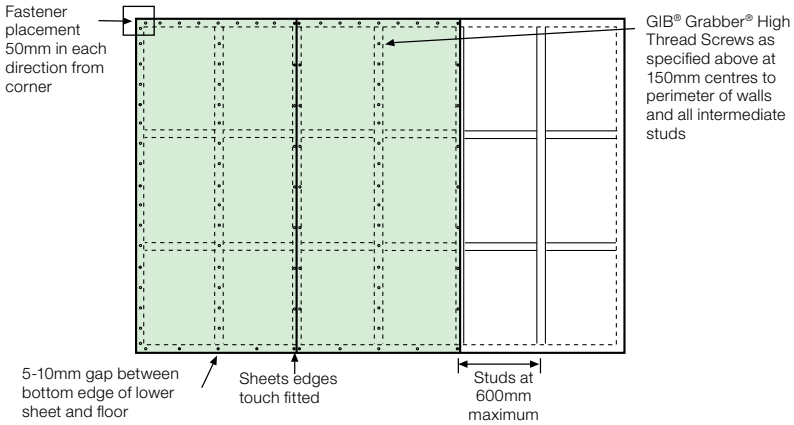

ABA20220988
APPROVED - Site Copy
Hastings District Council
20/09/2022

STEEL WALL FRAMING

Framing dimensions and spacing must be appropriate for the tile weight and comply with the requirements of NASH Standard Part 2:2019 Light Steel Framed Buildings, or relevant specific design Standard.

- Linings are placed hard to floor, bedded into a sealant bead
- Steel framing for tiling to have a minimum base metal thickness (BMT) of 0.75mm

NOGS

For impact protection in shower cubicles or shower over bath situations it is important that all sheet joints are made on solid framing. This may require vertical fixing or the installation of additional nogs. Also provide nogs:

- Adjacent to each pipe penetration and behind sink and tub flashings
- Between all studs above bath flanges and preformed shower bases

CORNER REINFORCING

- Prior to lining in tiled areas (shower cubicles and shower over bath only) the internal corners shall be reinforced with a minimum
- 32 x 32 x 0.55mm NZ18 or 45 x 45 x 0.55mm GIBFix® Angle. Each leg is fastened to the framing at 600mm centres

FASTENERS

- Minimum 32mm x 6g GIB® Grabber® Self Tapper screws

FASTENER CENTRES

- 150mm centres to perimeter of wall and all intermediate studs
- Adhesive is not to be used in place of mechanical fasteners
- Single screws to each stud where the horizontal joint crosses the studs
- Place fasteners 12mm from sheet edges and 18mm from sheet ends.

For bracing, noise control or fire rating applications including fastener lengths consult the relevant GIB® technical publication.

LINING AND TILE WEIGHTS

- Use minimum 13mm GIB® plasterboard
- For maximum permitted tile weights refer to pg 16 of this manual
- GIB® Wet Area linings may be fixed vertically or horizontally
- Sheets are touch fitted
- Provide a 5-10mm gap at the wall/floor junction and between the bottom edge of the lining and any bath rim or preformed shower base to allow for placement of sealant
- Do not tile on the resilient side of GIB Rail® or STWC Acoustic Clip (ST001) and channel noise control system
- GIB® Wet Area linings are suitable for tiling full height of walls, but if a wall is to be partially tiled (e.g. half high), only the area of wall under the tiles needs to be fixed as required for tiled areas. The remainder of the wall may be fixed as for non-tiled areas

JOINTING

- Jointing shall be carried out in accordance with the instructions of the GIB® Site Guide

Fastening the Linings – Horizontal Fixing Only

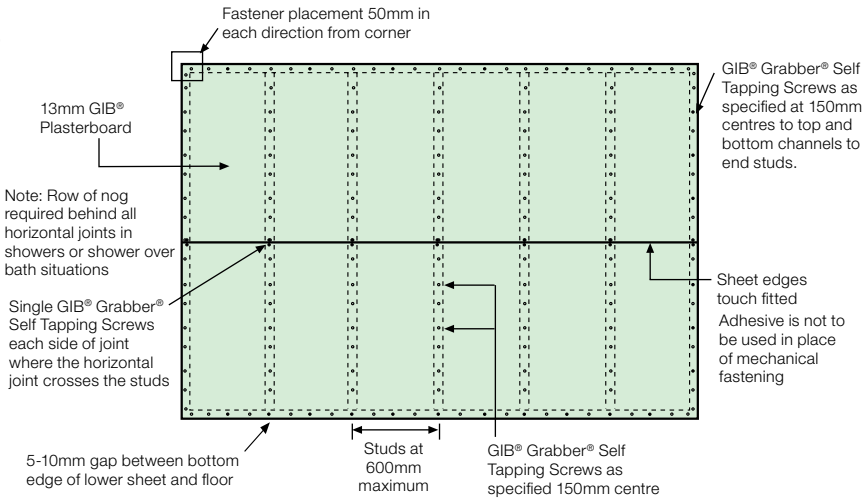

Fastening the Linings – Vertical Fixing Only

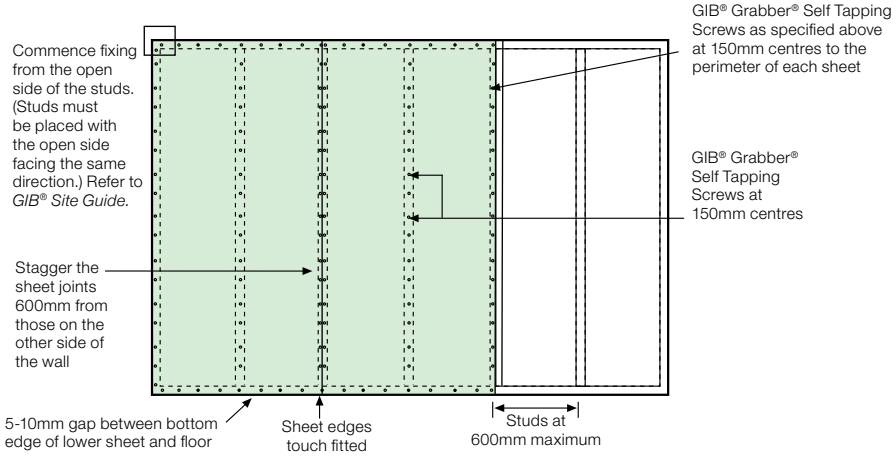

ABA20220988
APPROVED - Site Copy
Hastings District Council
20/09/2022

METAL ANGLES FOR TILED INTERNAL CORNERS

- Prior to lining in tiled areas (shower cubicles and shower over bath only) the internal corners shall be reinforced with a minimum 32 x 32 x 0.55mm galvanised metal angle.
- Suitable GIB® metal angle options include:
  - GIB® Rondo® NZ18 metal angle, available length: 3.0m
  - GIBFix® Angle metal angle, available lengths: 2.4m and 2.7m

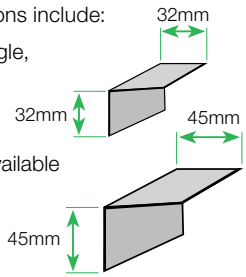

- Each side of the angle is secured to the framing with at 600mm centres
- Minimum height of the metal angle is 1800mm

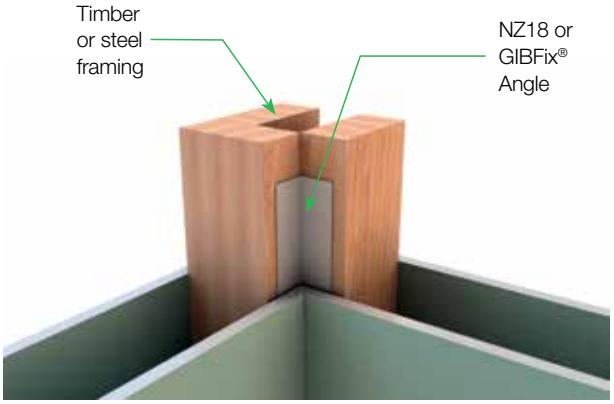

WATERPROOF MEMBRANE SYSTEMS

A waterproof membrane system must be applied to all lining materials used as a substrate for ceramic tiles in a shower or shower over a bath application, or any other tiled application exposed to frequent water splash.

For further information see p10.

TILES AND TILE WEIGHTS

In areas likely to be directly exposed to water, tiles may be ceramic, porcelain or stone must comply with the over-surface finish requirements of the IWAM Code of Practice and be bedded with a suitable tile adhesive on the waterproof membrane system. See page 10 for the minimum extent of wall surfaces requiring impervious sheet materials or waterproof membrane systems prior to tiling.

Smaller mosaic tiles are often lighter, but the integrity of grout joints might be more prone to impact, whilst heavier tiles are larger and have less and deeper grout and sealant joints. For more information also see AS 3958:2007 Ceramic tiles – Guide to the installation of ceramic tiles.

Table 2: Recommended maximum tile weights

Maximum Tile Weights for GIB Aqualine®, GIB Toughline® Aqua or GIB Weatherline®			
Stud Centre (maximum)	**Fasteners Centre (maximum)**	**Lining Thickness**	**Tile Weight**
600mm maximum	150mm maximum	10mm	26kg/m^2
		13mm	40kg/m^2

ADHESIVE AND GROUT WEIGHTS

The weight of adhesive and grout can vary depending on the type of tile and the installation process used. The maximum tile weights stated in table 2 are conservative and refer to the tile weight excluding grout and adhesive used. An additional 3kg/m^2 has been factored into tile adhesion testing on top of the above stated tile weights to account for adhesive and grout weight used during the installation of the tile.

ABA20220988
APPROVED - Site Copy
Hastings District Council
20/09/2022

CEILING FRAMING

Framing dimensions and spacing must comply with the requirements of NZS 3604:2011, NASH for steel or relevant NZ Standard.

For noise control or fire rating applications consult the relevant GIB® technical publication.

FASTENERS

- Steel battens – 25mm x 6g GIB® Grabber® Self Tapping screws
- Timber battens or Joists – 32mm x 6g GIB® Grabber® High Thread screws

ADHESIVES

- Steel battens - GIBFix® All-Bond
- Timber battens - GIBFix® All-Bond or GIBFix® One

FASTENERS CENTRES

- Single screws to the edges and centre of the sheets across each batten
- Single screw at 600mm maximum to the perimeter of the ceiling
- Screws to be 12mm from sheet edges
- Daubs of adhesive at 200mm centres between the screws
- Do not place adhesive at sheet edges or under fasteners, this may lead to screw pops

LINING

- The lining shall be fixed at right angles to the battens or joists
- Commence fixing from the centre of the sheets outwards.
- Sheets to be touch fitted
- Use long length sheets to minimise sheet end butt joints.
- Back-block sheet end butt joints
- See GIB® Site Guide for sheet edge backblocking requirements

BATTEN SPACINGS

- 13mm GIB® plasterboard – 600mm centres maximum
- 10mm GIB® plasterboard – 450mm centres maximum

JOINTING

- All sheet joints must be paper tape reinforced and stopped in accordance with instructions in the GIB® Site Guide
- Do not fix tiles to GIB® plasterboard ceilings

Maximum GIB® Rondo® metal ceiling batten centres:

- 600mm for 13mm GIB® plasterboard
- 450mm for 10mm GIB® plasterboard

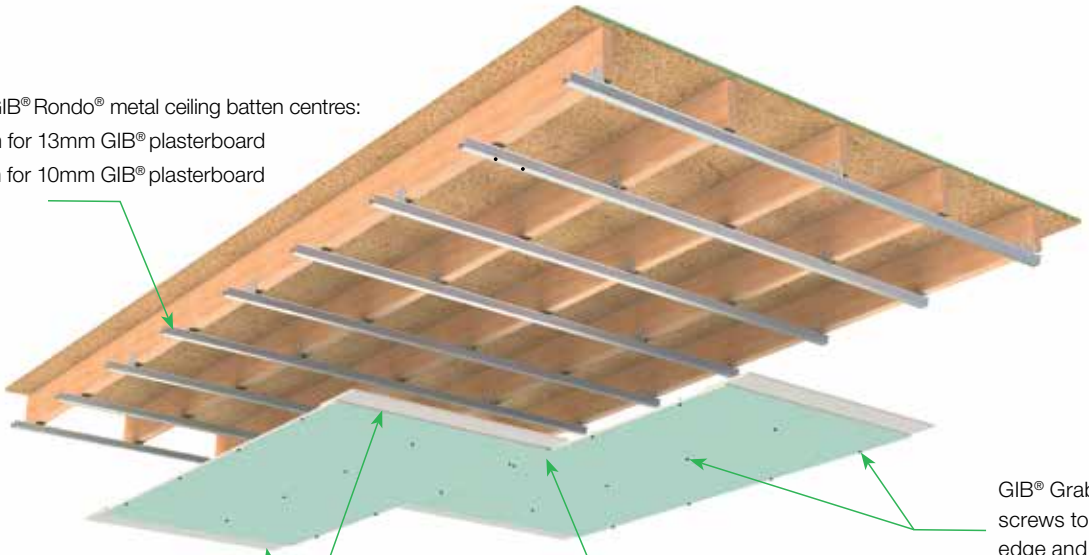

GIB® Grabber® screws to sheet edge and sheet centre at each batten intersection

Back-block sheet end joints (see GIB® Site Guide)

Stagger sheet end joints by 600mm or nearest batten

ABA20220988
APPROVED - Site Copy
Hastings District Council
20/09/2022

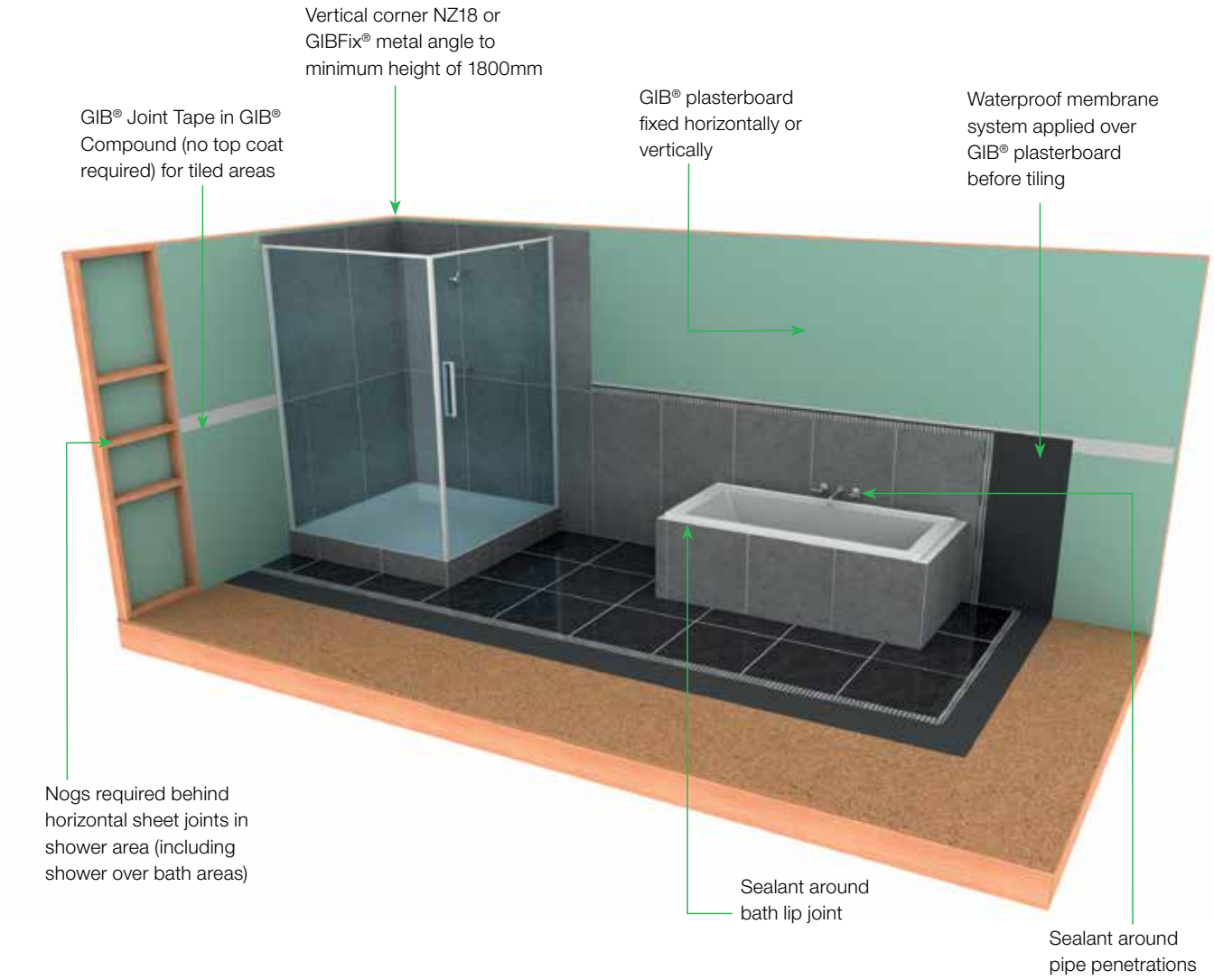

ABA20220988
APPROVED - Site Copy
Hastings District Council
20/09/2022

A: TILED INTERNAL CORNER

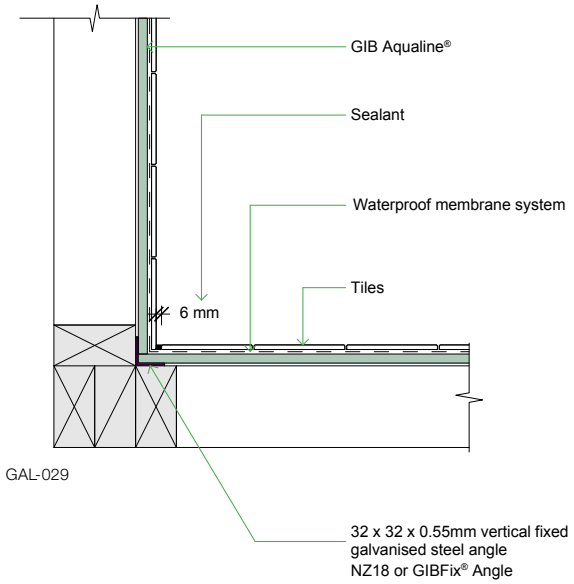

GAL-029

B: CERAMIC FLOOR LINING JUNCTION

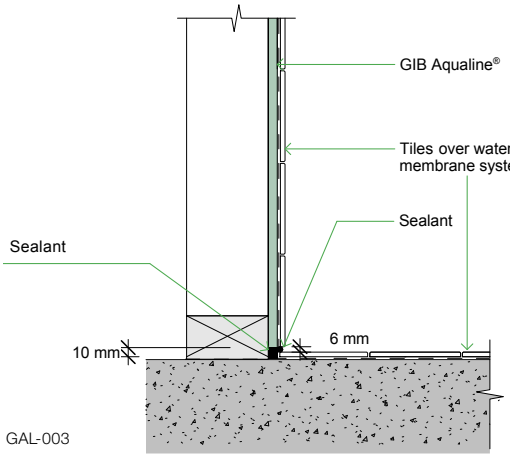

GAL-003

C: BATH LINING JUNCTION

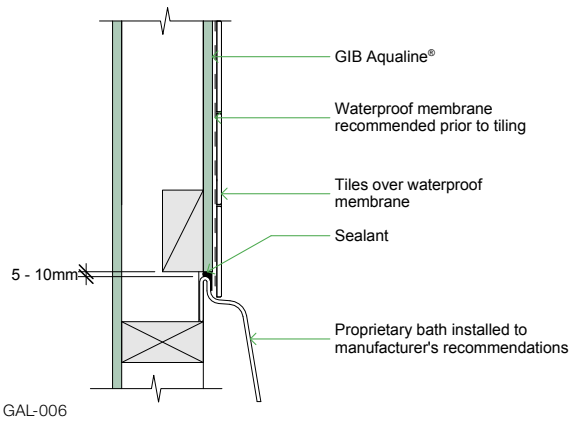

GAL-006

G: SHOWER MIXER PENETRATION IN WET WALL LININGS

Refer to the shower mixer manufacturer for shower mixer installation detailing including the use of proprietary products to prevent water or moisture ingress behind the wet wall lining.

D: SEALING WET AREA PENETRATION

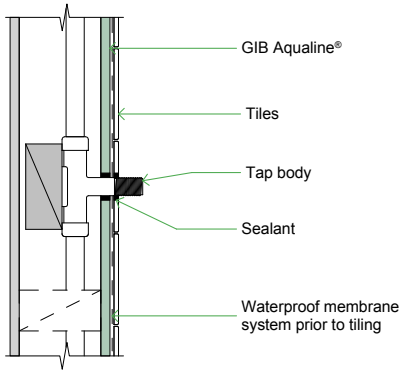

GAL-002

E: BATH CRADLE LINING DETAIL

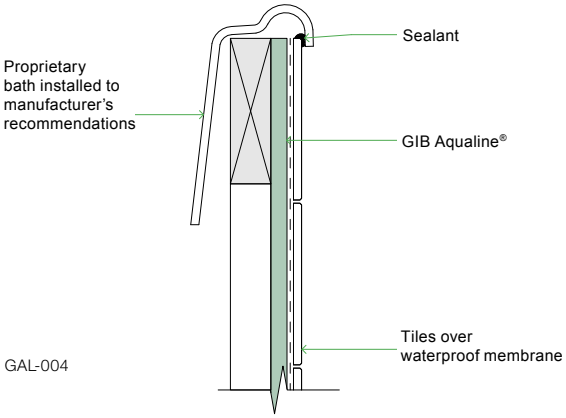

GAL-004

F: VANITY TOP LINING JUNCTION

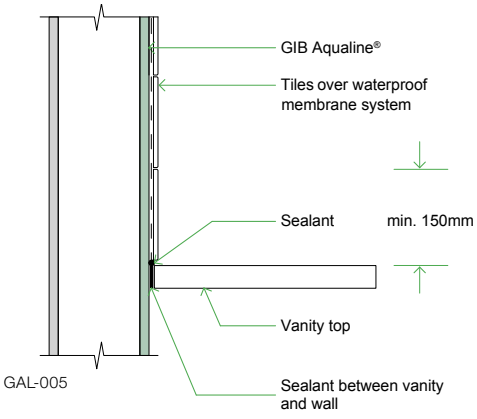

GAL-005

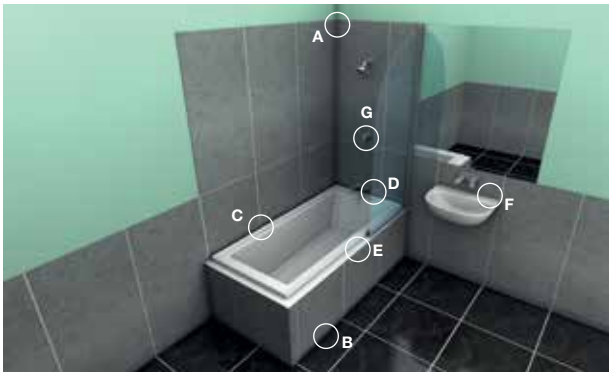

ABA20220988
APPROVED - Site Copy
Hastings District Council
20/09/2022

A: BATH LINING JUNCTION

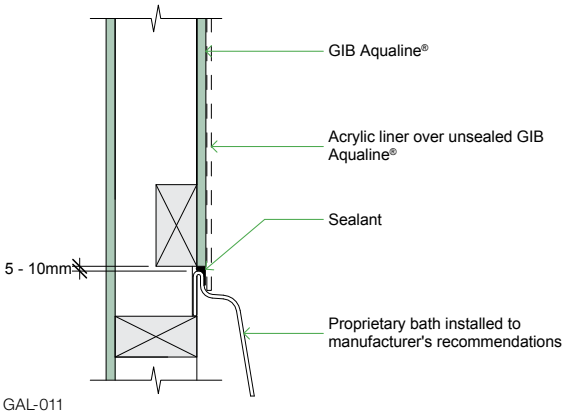

GAL-011

B: VANITY TOP LINING JUNCTION

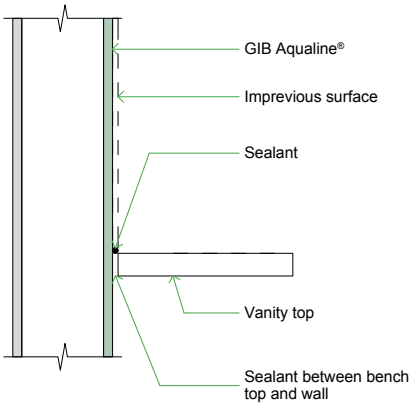

GAL-023A

C: UNSEALED PLASTERBOARD LINING

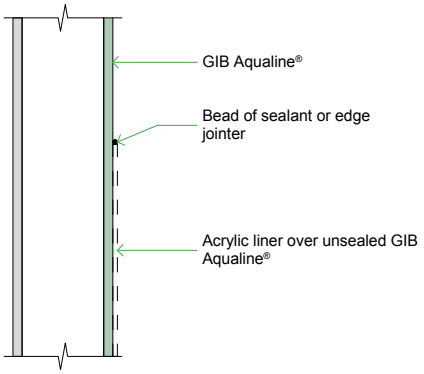

GAL-028

D: CERAMIC FLOOR SKIRTING LINING JUNCTION

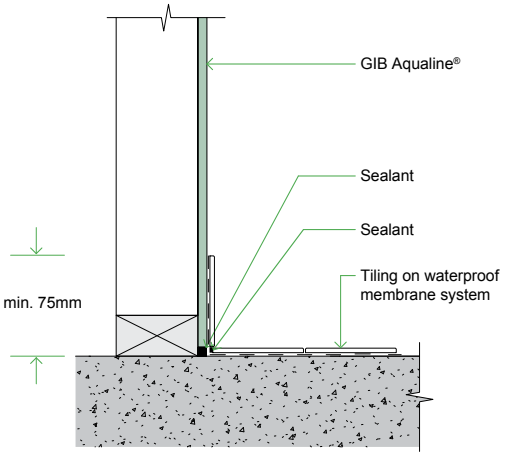

GAL-001

E: SEALING SEMI WET AREA PENETRATION

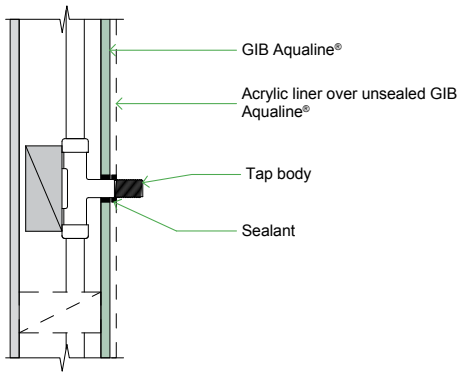

GAL-019

F: SHOWER MIXER PENETRATION IN WET WALL LININGS

Refer to the shower mixer manufacturer for shower mixer installation detailing including the use of proprietary products to prevent water or moisture ingress behind the wet wall lining.



ABA20220988
APPROVED - Site Copy
Hastings District Council
20/09/2022

A: BATH LINING JUNCTION

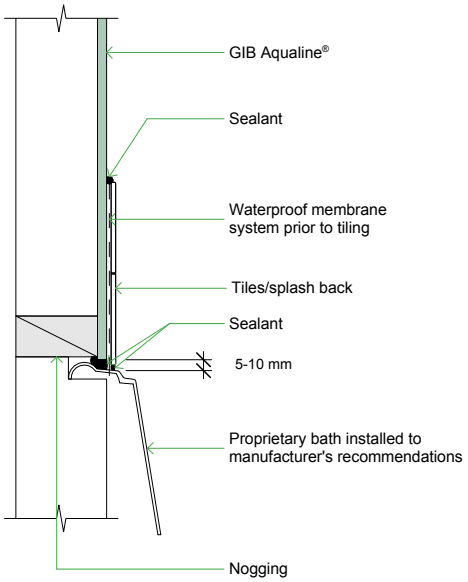

GAL-009

B: SEALING SEMI WET AREA PENETRATION

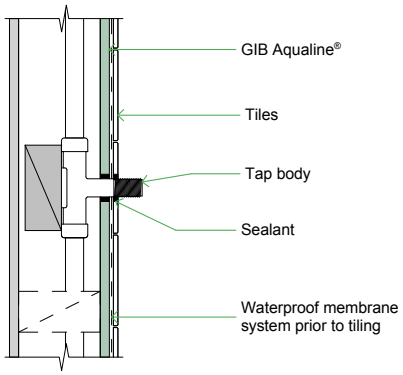

GAL-020

C: VANITY TOP LINING JUNCTION

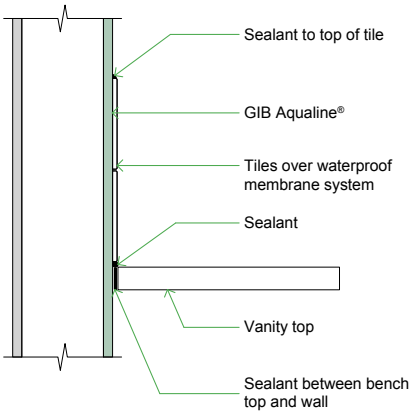

GAL-024

D: BATH LINING JUNCTION

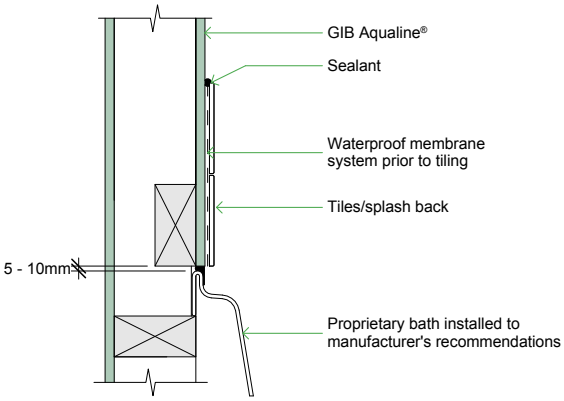

GAL-010

E: CRADLE VINYL LINING JUNCTION

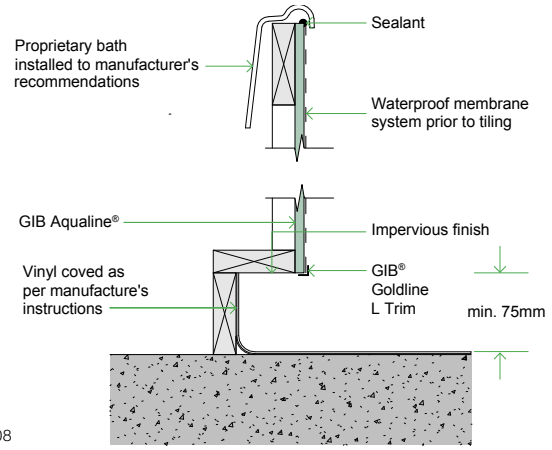

GAL-008

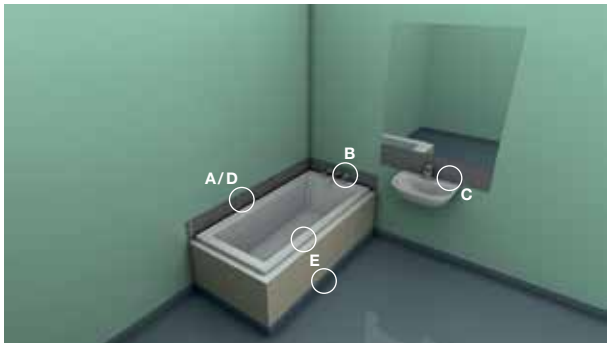

ABA20220988
APPROVED - Site Copy
Hastings District Council
20/09/2022

A: MORTAR UNDER CERAMIC FLOOR LINING JUNCTION

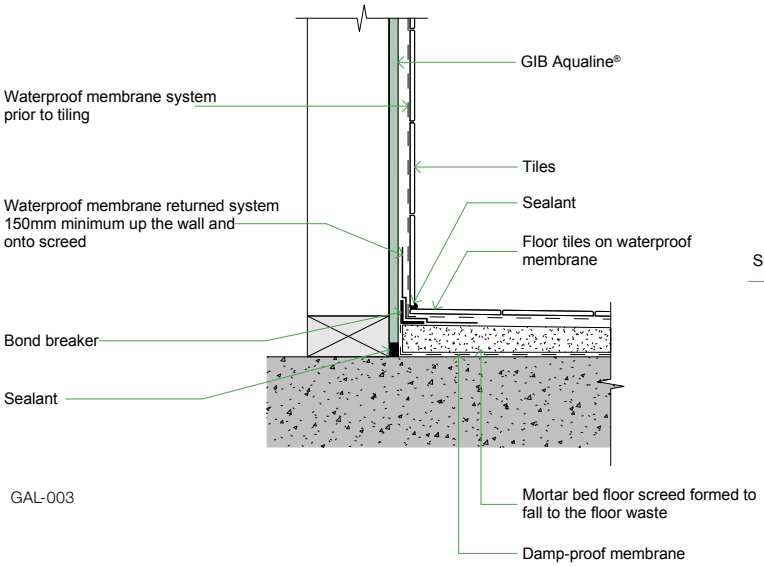

GAL-003

C: CERAMIC FLOOR LINING JUNCTION

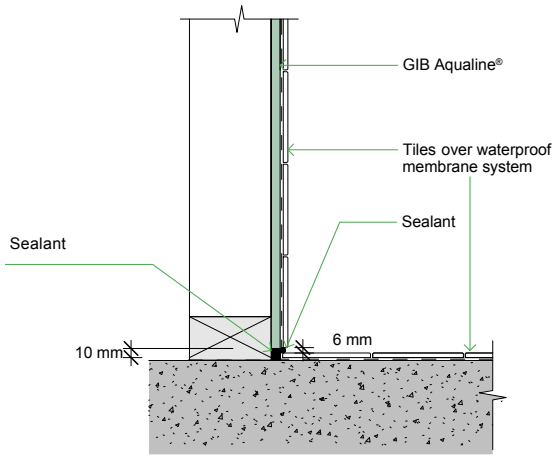

GAL-002A

PREFORMED SHOWER BASE JUNCTIONS

Refer to the shower base manufacturer for proprietary shower tray installation detailing including wet wall lining junction detailing.

B: TILED INTERNAL CORNER

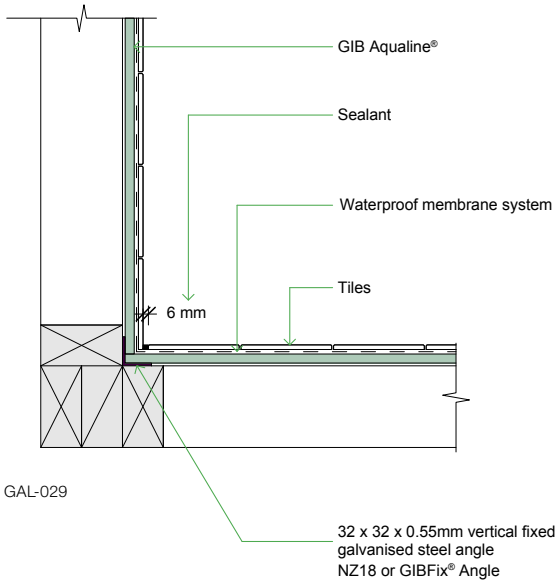

GAL-029

D: TILED INTERNAL CORNER METAL ANGLE POSITION

Refer to page 16 of this publication for specification and installation guidance.

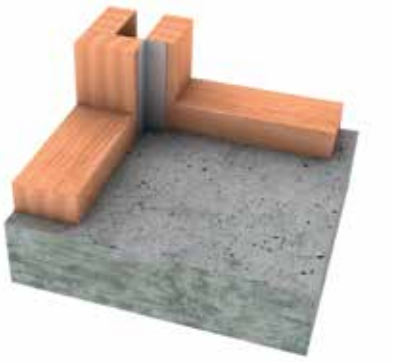

E: SHOWER MIXER PENETRATION IN WET WALL LININGS

Refer to the shower mixer manufacturer for shower mixer installation detailing including the use of proprietary products to prevent water or moisture ingress behind the wet wall lining.



ABA20220988
APPROVED - Site Copy
Hastings District Council
20/09/2022

A: CERAMIC FLOOR SKIRTING LINING JUNCTION

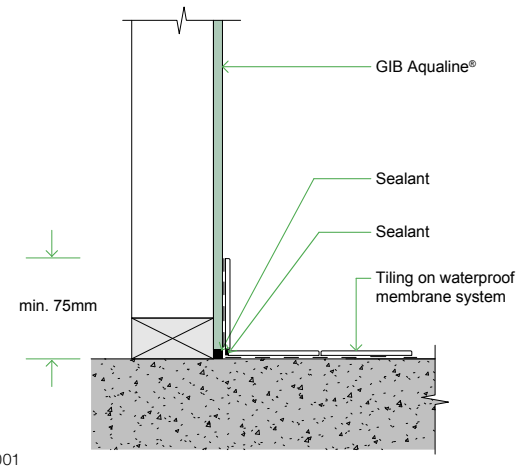

GAL-001

B: MOULDED SHOWER TRAY DOUBLE LINING JUNCTION

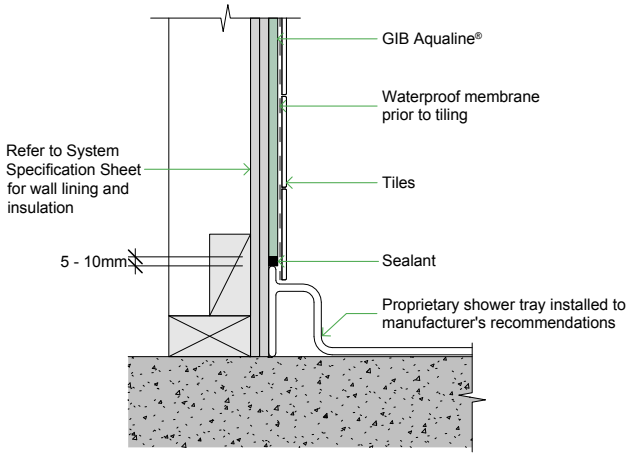

GAL-016

C: TILED INTERNAL CORNER

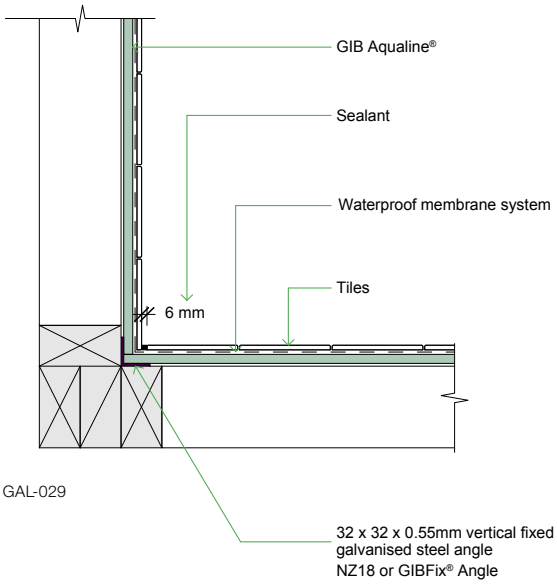

GAL-029

D: TILED INTERNAL CORNER METAL ANGLE POSITION

Refer to page 16 of this publication for specification and installation guidance.

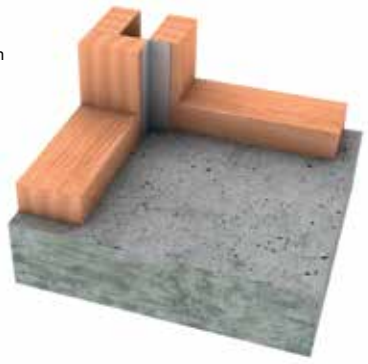

E: SHOWER MIXER PENETRATION IN WET WALL LININGS

Refer to the shower mixer manufacturer for shower mixer installation detailing including the use of proprietary products to prevent water or moisture ingress behind the wet wall lining.



ABA20220988
APPROVED - Site Copy
Hastings District Council
20/09/2022

A: MOULDED SHOWER TRAY DOUBLE LINING JUNCTION

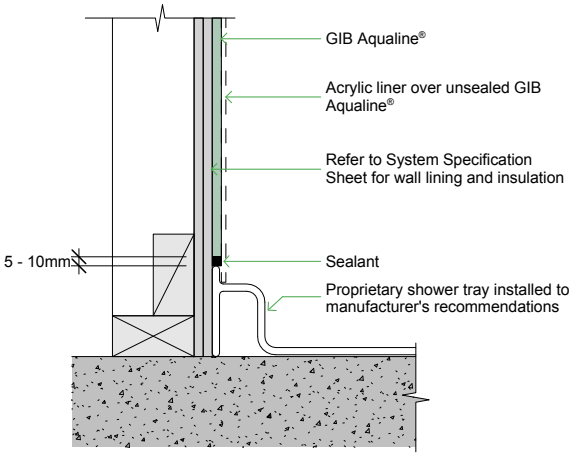

GAL-015

B: CERAMIC FLOOR SKIRTING LINING JUNCTION

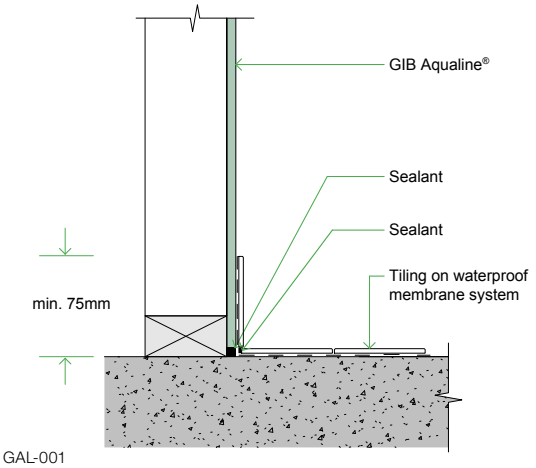

GAL-001

C: UNSEALED PLASTERBOARD LINING

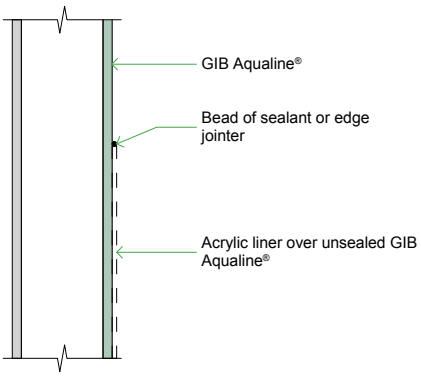

GAL-028

D: SHOWER MIXER PENETRATION IN WET WALL LININGS

Refer to the shower mixer manufacturer for shower mixer installation detailing including the use of proprietary products to prevent water or moisture ingress behind the wet wall lining.



ABA20220988
APPROVED - Site Copy
Hastings District Council
20/09/2022

A: BENCH TOP LINING JUNCTION

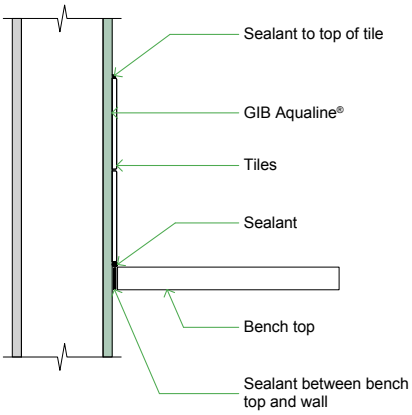

GAL-024

B: COOKTOP LINING JUNCTION

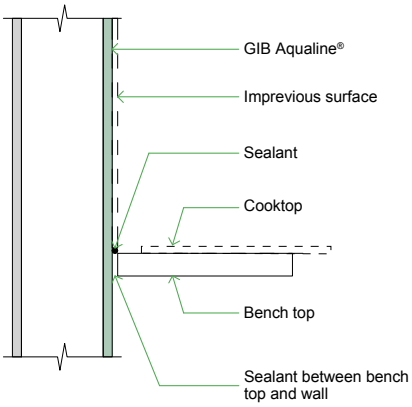

GAL-023B

CERAMIC FLOOR SKIRTING LINING JUNCTION

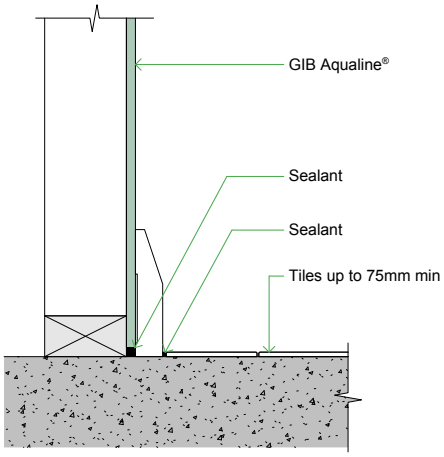

GAL-001A



ABA20220988
APPROVED - Site Copy
Hastings District Council
20/09/2022

A: VANITY TOP LINING JUNCTION

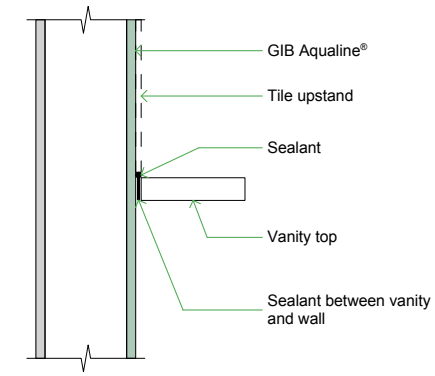

GAL-022

B: SEALING WET AREA PENETRATION LINING JUNCTION

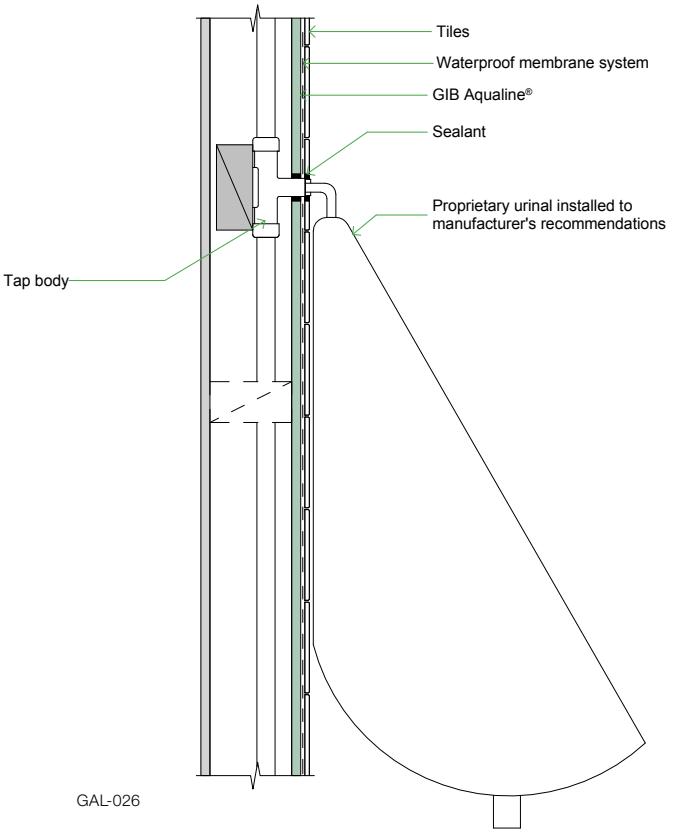

GAL-026



ABA20220988
APPROVED - Site Copy
Hastings District Council
20/09/2022

A: SURFACE MOUNTED WITH NOG

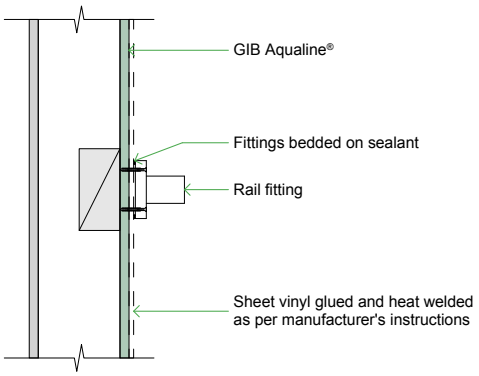

GAL-027

C: BASIN LINING JUNCTION

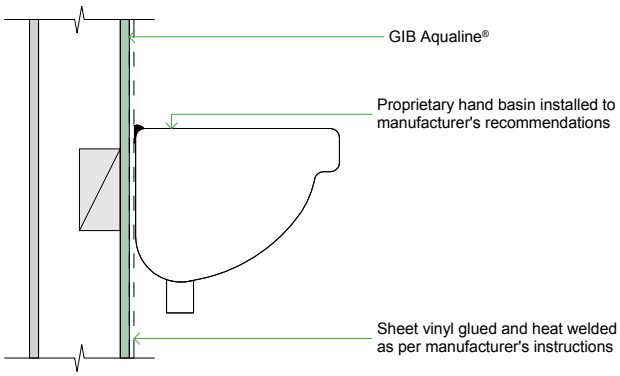

GAL-025

B: VINYL FLOOR LINING JUNCTION

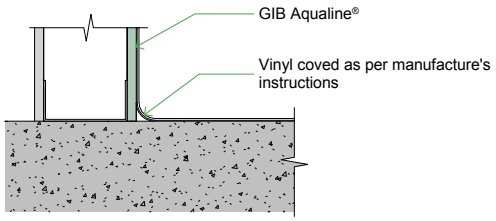

GAL-006A



ABA20220988
APPROVED - Site Copy
Hastings District Council
20/09/2022

A: MOULDED SHOWER TRAY DOUBLE LINING JUNCTION

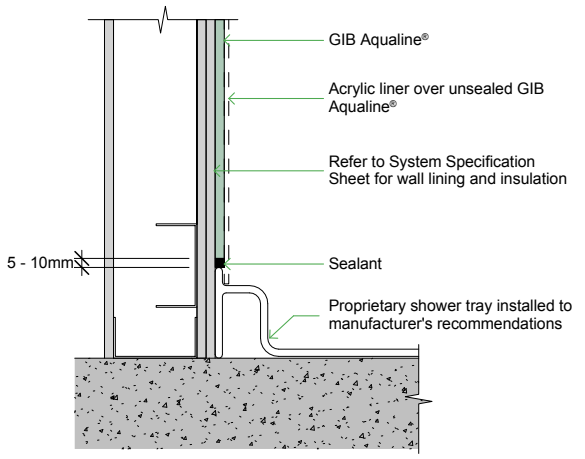

GAL-017

C: MOULDED SHOWER TRAY DOUBLE LINING JUNCTION

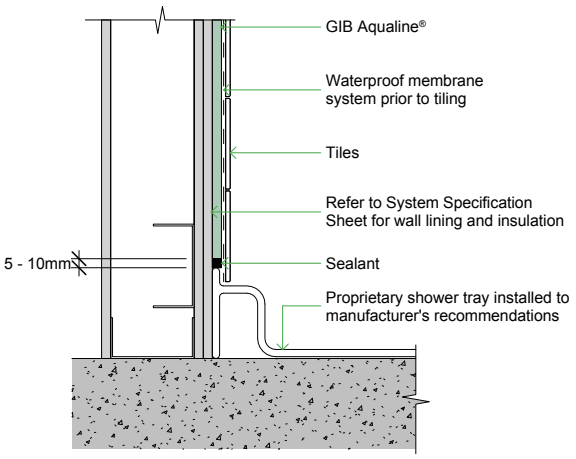

GAL-018

B: BATH DOUBLE LINING JUNCTION

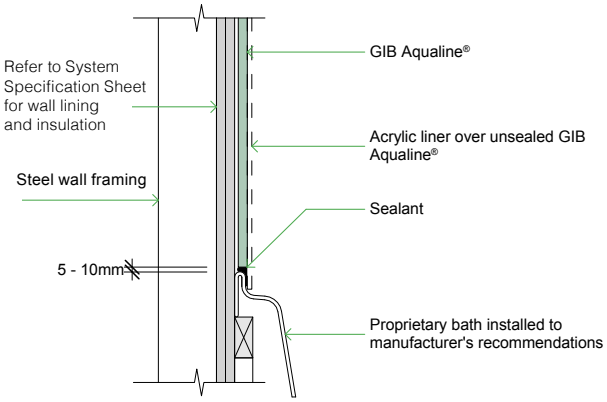

GAL-013

D: BATH DOUBLE LINING JUNCTION

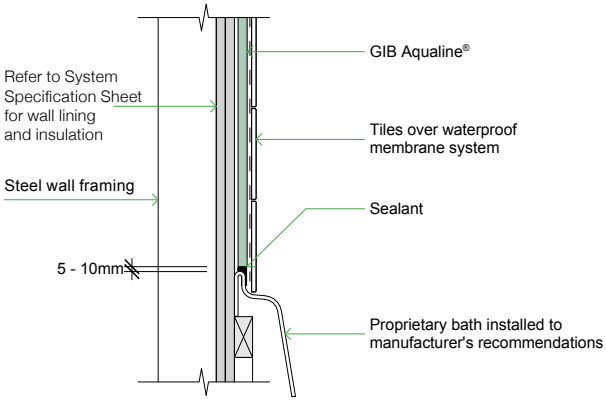

GAL-014

GIB® WET AREA SYSTEMS FIRE RESISTANCE AND NOISE CONTROL PERFORMANCE

Given recesses required for shower trays, bath upstands, etc., and the likelihood of renovations during the service life of the building, it is recommended that GIB® Wet Area linings in water splash areas are installed in addition to and over required fire and noise control systems in commercial or multi-residential applications.

Do not tile on the resilient side of a GIB Rail® or Acoustic Resilient Mount (ST-001) and channel noise control system.

E: INTERTENANCY WALL AND WET AREA WALL JUNCTION

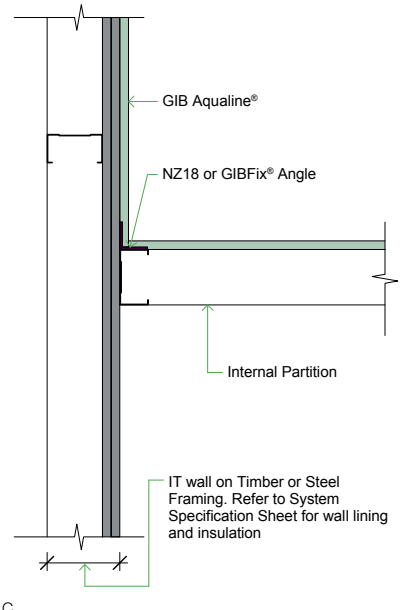

GAL-031C

ABA20220988
APPROVED - Site Copy
Hastings District Council
20/09/2022

TIMBER FRAME TILE RECESS

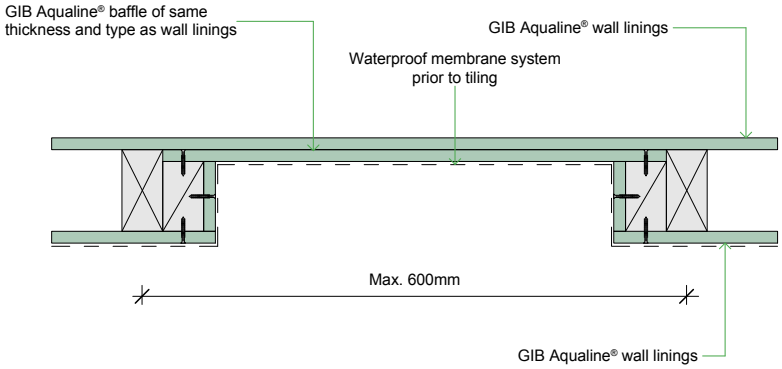

Larger recesses can be accommodated depending on specific framing layout provided 500mm is not exceeded in at least one direction.

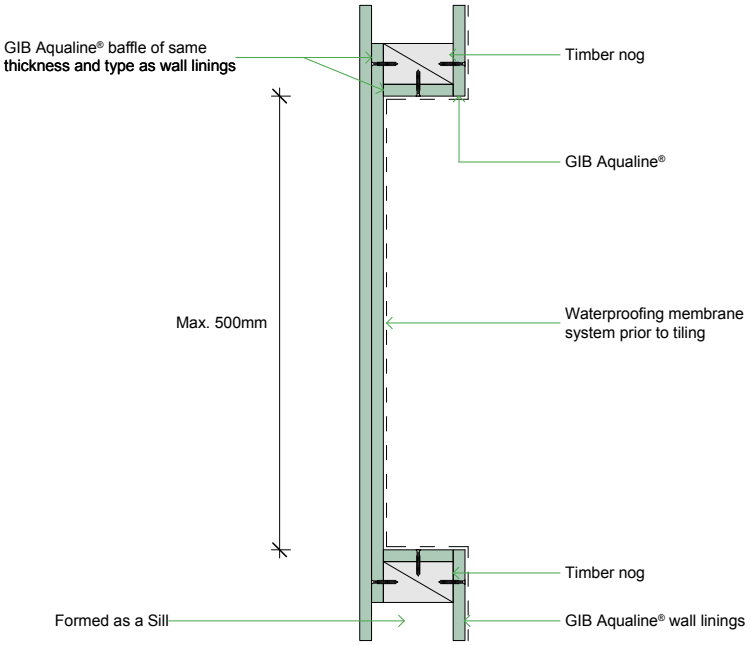

GAL-029B

ABA20220988
APPROVED - Site Copy
Hastings District Council
20/09/2022

STEEL FRAME TILE RECESS

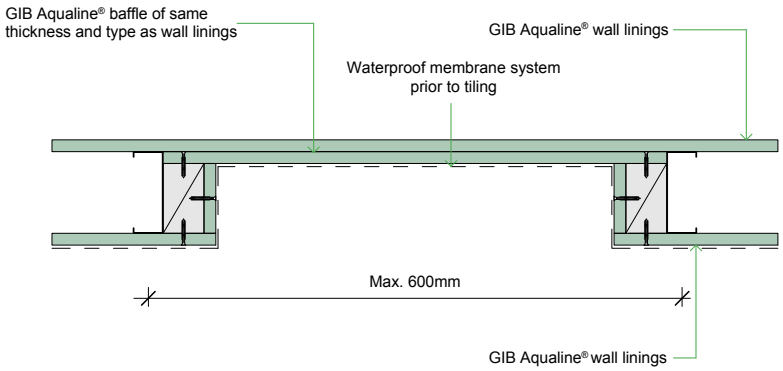

Larger recesses can be accommodated depending on specific framing layout provided 500mm is not exceeded in at least one direction.

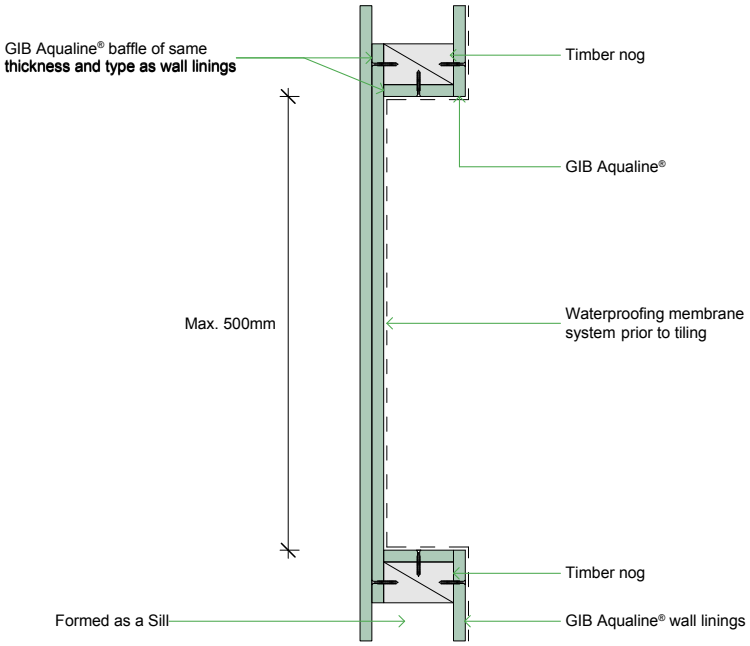

GAL-030

ABA20220988
APPROVED - Site Copy
Hastings District Council
20/09/2022

GIB® Wet Area Systems, February 2021

LIMITATIONS

Winstone Wallboards Ltd accepts no liability if the GIB® Wet Area Systems and junction details are not installed in strict accordance with instructions contained within this publication.

USE ONLY THE CURRENT SPECIFICATION

This publication may be superseded by a new publication. Winstone Wallboards accepts no liability for reliance upon publications that have been superseded. You should check the GIB® website to ensure you are using the current publication. If you are unsure whether this is the current publication, simply call the GIB® Helpline on 0800 100 442.

SUBSTITUTION

GIB® Wet Area Systems have been specifically designed and tested to achieve the stated performance levels. To maintain the GIB® Product and System Warranty, all system components detailed in this publication must be used when specifying and installing GIB® Wet Area Systems.

TRADEMARKS

The names GIB®, GIB Fyreline®, GIB Ultraline®, GIB Toughline®, GIB Braceline® GIB Noiseline®, GIB Aqualine®, GIB Weatherline®, GIB Tradeset®, GIB Plus 4®, GIB-Cove®, GIB Lite Blue®, GIBFix®, GIB® Quiet Stud®, GIB Rail®, GIB Barrierline®, GIB X-Block®, GIB Fire Soundseal®, GIB Clip®, the colour mauve for GIB Toughline®, the colour blue for GIB Braceline® GIB Noiseline®, the colour pink for GIB Fyreline®, the colour green for GIB Aqualine®, the colour purple for GIB Weatherline® and the shield device are registered trademarks of Fletcher Building Holdings Limited.

COPYRIGHT

All of the material contained in this brochure, including all text, tables, charts, graphs, drawings, images and diagrams, are protected by copyright. These materials may not be reproduced, adapted or transmitted in any form by any process, without the permission of Winstone Wallboards Ltd.

Copyright© Winstone Wallboards Ltd, 2021.

ABA20220988
APPROVED - Site Copy
Hastings District Council
20/09/2022

GIB®

FOR MORE INFORMATION VISIT

gib.co.nz

OR CALL THE GIB® HELPLINE

0800 100 442

February 2021

Resene
Construction Systems

graphex.

INSULATED FACADE SYSTEM

Our premium Insulated cavity based, rainscreen Façade System coated with our reinforced render system applied over our exclusive GRAPHEX Insulation panels.

The GRAPHEX Insulated Plaster Façade System offers a lightweight, complete thermal barrier to the weather extremes' which will keep your home cooler in summer and warmer in winter in a cost effective manner all the while protecting the structure.

Proven Technology

Our GRAPHEX Insulation panel is installed over the time tested cavity construction method along with our exclusive EdgeSeal flashing technology. Protected with our 6 layers of hand applied reinforced render, texture & paint. All finished with your choice of texture from our wide range incorporating 'genuine' Resene colours.

Attractive and Durable

This System carries our written Performance Guarantee, Workmanship Warranty from your qualified LBP Registered Plasterer. The System includes our premium OnSite Quality Assurance programme providing surety of performance from installation to finish.

Innovative design.
Integrated systems.
Enduring finish.

ABA20220988
APPROVED - Site Copy
Hastings District Council
20/09/2022



Resene Construction Systems

graphex.

INSULATED FACADE SYSTEM

ABA20220988
APPROVED - Site Copy
Hastings District Council
20/09/2022

ROCKCOTE | Plaster Systems

SYSTEM FEATURES:

- Drained Rainscreen Façade System
- Hand Plastered
- Registered LBP plasterer application
- Performance Guarantee
- Patented EdgeSeal window flashing suite
- GRAPHEX Thermal envelope
- 'Genuine' Resene Colour Range
- Technical OnSite Assistance
- Seismic and Weathertight tested (BRANZ)
- BRANZ Appraisal # 633

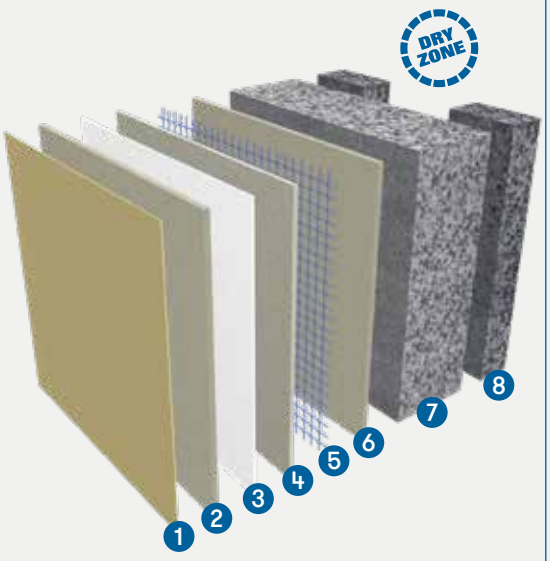

1 Resene X 200
2 Pre-Coloured Texture
3 Resene Limelock
4 PM100 Quick Render
5 Fibreglass Reinforcing
6 PM100 Quick Render
7 GRAPHEX Insulation
8 Cavity Battens

	INTEGRA Façade Light Weight Concrete	INTEGRA Flooring	INTEGRA Fencing	GRAPHEX Insulated Façade	GRAPHEX Masonry Overlay	GRAPHEX solid	Masonry Block	Fibre Cement	LiteRock	Brick	ICF(Polystyrene Blocks)	Tilt Panel	Artisan Interiors
Insulated	○	○		●	○	○					○		
Impact Resistance	○	○	○	●	○	○	○	○	○		○	○	
Acoustic	○	○	○			○			○	○	○	○	
Resene Colours	○		○	●	○		○	○	○	○	○	○	○
BRANZ	○			●	○	○	○	○	○				
Fire Tests	○			●	○	○	○	○	○	○	○	○	○
FPB	○	○	○	●	○	○	○	○	○	○	○	○	○
Full Render System	○		○	●	○	○	○	○	○	○	○		
Substrate supplied	○	○	○	●		○							
Acrylic Texture	○		○	●	○	○	○	○	○	○	○	○	
Mineral Texture	○		○	●	○	○	○		○	○	○	○	○
Cavity System	○			●				○	○				
GreenSite	○	○	○	●	○	○	○	○	○	○	○	○	
Masonry Construction	○	○	○		○	○	○			○	○	○	
Window Reveals	○		○	●	○	○	○			○	○	○	

BRANZ Appraised 530 476 477 500 681 633 706 553

FPS.CO.NZ FUTURE-PROOF BUILDING

P 0800 50 70 40
W reseneconstruction.co.nz

Resene
Construction Systems

ABA20220988
APPROVED - Site Copy
Hastings District Council
20/09/2022

ROCKCOTE psl PLASTER SYSTEMS

graphex.

Insulated Façade



Graphex Insulated Façade System Specification

www.reseneconstruction.co.nz
0800 50 70 40

Resene
Construction Systems

graphex.

INSULATED FACADE SYSTEM

Our premium Insulated cavity based, rainscreen Façade System coated with our reinforced render system applied over our exclusive GRAPHEX Insulation panels.

The GRAPHEX Insulated Plaster Façade System offers a lightweight, complete thermal barrier to the weather extremes' which will keep your home cooler in summer and warmer in winter in a cost effective manner all the while protecting the structure.

Proven Technology

Our GRAPHEX Insulation panel is installed over the time tested cavity construction method along with our exclusive EdgeSeal flashing technology. Protected with our 6 layers of hand applied reinforced render, texture & paint. All finished with your choice of texture from our wide range incorporating 'genuine' Resene colours.

Attractive and Durable

This System carries our written Performance Guarantee, Workmanship Warranty from your qualified LBP Registered Plasterer. The System includes our premium OnSite Quality Assurance programme providing surety of performance from installation to finish.

Innovative design.
Integrated systems.
Enduring finish.

ABA20220988
APPROVED - Site Copy
Hastings District Council
20/09/2022



Resene Construction Systems

graphex.

INSULATED FACADE SYSTEM

ABA20220988
APPROVED - Site Copy
Hastings District Council
20/09/2022

ROCKCOTE | Plaster Systems

SYSTEM FEATURES:

- Drained Rainscreen Façade System
- Hand Plastered
- Registered LBP plasterer application
- Performance Guarantee
- Patented EdgeSeal window flashing suite
- GRAPHEX Thermal envelope
- 'Genuine' Resene Colour Range
- Technical OnSite Assistance
- Seismic and Weathertight tested (BRANZ)
- BRANZ Appraisal # 633

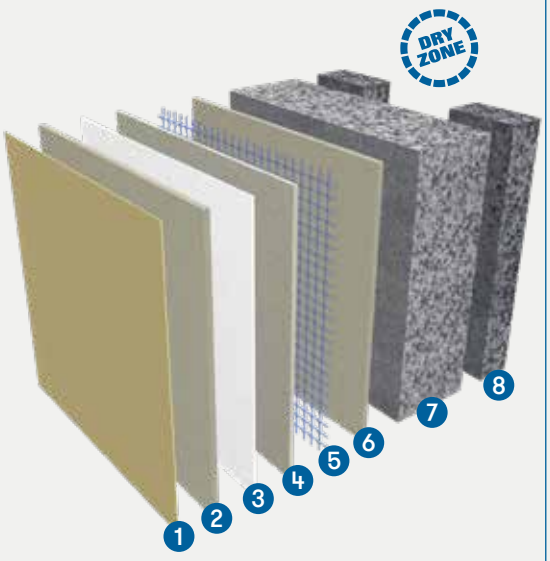

1 Resene X 200
2 Pre-Coloured Texture
3 Resene Limelock
4 PM100 Quick Render
5 Fibreglass Reinforcing
6 PM100 Quick Render
7 GRAPHEX Insulation
8 Cavity Battens

	INTEGRA Façade Light Weight Concrete	INTEGRA Flooring	INTEGRA Fencing	GRAPHEX Insulated Façade	GRAPHEX Masonry Overlay	GRAPHEX solid	Masonry Block	Fibre Cement	LiteRock	Brick	ICF(Polystyrene Blocks)	Tilt Panel	Artisan Interiors
Insulated	○	○		●	○	○					○		
Impact Resistance	○	○	○	●	○	○	○	○	○		○	○	
Acoustic	○	○	○			○			○	○	○	○	
Resene Colours	○		○	●	○		○	○	○	○	○	○	○
BRANZ	○			●	○	○	○	○	○				
Fire Tests	○			●	○	○	○	○	○	○	○	○	○
FPB	○	○	○	●	○	○	○	○	○	○	○	○	○
Full Render System	○		○	●	○	○	○	○	○	○	○		
Substrate supplied	○	○	○	●		○							
Acrylic Texture	○		○	●	○	○	○	○	○	○	○	○	
Mineral Texture	○		○	●	○	○	○		○	○	○	○	○
Cavity System	○			●				○	○				
GreenSite	○	○	○	●	○	○	○	○	○	○	○	○	
Masonry Construction	○	○	○		○	○	○			○	○	○	
Window Reveals	○		○	●	○	○	○			○	○	○	

BRANZ Appraised 530 476 477 500 681 633 706 553

FPS.CO.NZ FUTURE-PROOF BUILDING

P 0800 50 70 40
W reseneconstruction.co.nz

ABA20220988
APPROVED - Site Copy
Hastings District Council
20/09/2022

Graphex Insulated Facade System - Graphex 50mm Panel on 20mm Cavity - Acrylic RenderSpec

General

Properties

Graphex Panels have the following material properties:

- Thermal Conductivity: 0.032 W/(mk)
- Thermal Resistivity, R0.69 @40mm, R0.86 @50mm, R1.03 @60mm (The thermal calculations shown are de-rated in accordance with NZS4214)
- Substrate Thickness: 40/50/60mm GRAPHEX Insulation panel
- Total thickness: 45/55/65mm (min/average) coatings and substrate (excluding cavity)
- Weight: approx 7kg/m2 coatings and substrate, considered a light weight cladding in terms of NZS3604
- Windzone: All wind zones of 3604

Building Code Compliance

If the project has a building consent then the following clauses apply.

Durability

The work covered by this part of the specification has been designed and constructed to meet the durability performance requirements of NZBC B2.

On Going Maintenance Instructions

Provide ongoing maintenance instructions required to meet the performance requirements of the NZBC.

Substrate

All the appropriate inspections are to be carried out by a BCA representative and that it complies with the NZBC requirements.

Documents

Abbreviations

The following abbreviations are used throughout this work section:

Documents to also refer to where applicable

- NZBC B1 Structure
- NZBC B2 Durability
- NZBC E2 External Moisture
- NZBC F2 Hazardous Building Materials
- AS/NZS 1170.2 Structural design actions - Wind actions
- NZS 3602 Timber and wood-based products for use in building
- NZS 3603 Timber structures standard
- NZS 3604 Timber framed buildings
- BRANZ Bulletin 353 Ground clearances
- BRANZ Bulletin 418 Weathertightness do's and don'ts
- BRANZ Bulletin 439 Condensation risk in walls

Manufacturers Documents

- Resene Construction Systems Technical Resources
- Resene Construction Systems TradeSpec
- Resene Construction Systems Project Guide
- Resene: Total Colour System

Copies of the above relevant company documents referred to in this specification are available at;

ABA20220988
APPROVED - Site Copy
Hastings District Council
20/09/2022

Resene Construction Systems
Web: reseneconstruction.co.nz
Telephone: 0800 50 70 40

Resene Paints
Web:resene.co.nz
Telephone: 0800 RESENE (0800 737 363)

No Substitutions

Substitutions are not permitted to any specified Resene Construction Systems system. Materials and execution to Resene Construction Systems specification except where varied by this specification and supported by architectural detailing.

Qualifications

Use only LBP registered plasterers licensed to apply the Resene Construction Systems exterior render systems.

Documentation

Finish Sample

Submit one 300 mm x 300 mm sample of the selected texture finish and colour for approval on request by the main contractor or specifier. Obtain signature of acceptance on sample and return to the Registered Plasterer.

Maintenance Instructions

Provide Resene Construction Systems Maintenance Guide on or before practical completion of the contract for issuing to the building owner. Resene Construction Systems Maintenance Guide to be provided on request.

Producer Statement

If the project has a building consent then a producer statement shall be supplied by the plasterer in the form as required by the BCA.

Health and Safety

Refer to the requirements of the Health and Safety in Employment Act 2015 and Worksafe NZ: Guidelines for the provision of facilities and general safety in the construction industry. If the elimination or isolation of potential hazards and risks is not possible then minimise hazards and risks in this work on site by using the proper equipment and techniques as required in the MPNZA Painters hazard handbook. Supply protective clothing and equipment. Inform employees and others on site of the hazards and put into place procedures for dealing with emergencies. Obtain from Resene Construction Systems the Material Safety Data Sheets for each product. Keep sheets on site and comply with the required safety procedures. Confirmation at the start of the project as to whether a Site Specific Safety Plan is to be produced by the Registered Plasterer prior to works starting.

Warranty

Warrant this system under normal environmental and use conditions against failure. Resene Construction Systems system warranty.
Materials: by Resene Construction Systems - 15 Years Materials only
Execution: by Registered Plasterer - 5 Years Workmanship only

OnSite Assistance

Allow to inspect the whole of the work at each stage. Determine a programme for onsite assistance including notification when each part and stage of the work is ready for inspection prior to the work commencing. Permit representatives of Resene Construction Systems to inspect the work in progress and to take samples of their products from site if requested.

Components

RCS 20mm Graphex Battens

- 40mm x 20mm H-Grade Graphex Peel and Stick Batten
- Supplied in Boxes
- 228 units in a box
- AS 1366 Part 3 Class H (with fire retardant).

Graphex 50mm

ABA20220988
APPROVED - Site Copy
Hastings District Council
20/09/2022

- 2400 x 1200
- 50mm Thick
- Allow for 10% Wastage when Installing
- AS 1366 Part 3 Class H (with fire retardant).

Nails (Preloaded) 110mm

- Flat-head, hot-dipped galvanised and 40 mm diameter nylon washers.
- 110mm x 3.55

RCS Drip Edge (Window Heads)

- Supplied in 2400mm Lengths
- Used with both the EdgeSeal Head Flashing and also the Universal Starter Strip

RCS EdgeSeal Head Flashing

- Supplied in 2.4m Lengths
- Generally requires the Drip Edge Flashing

RCS EdgeSeal Window Flashing

- Used for sill and jamb installations
- Supplied in 2400mm lengths

RCS Pre-meshed Corners

- Supplied in 2400mm Lengths

RCS Starter Strip (50mm Clip-On)

- Supplied in 2400mm Lengths
- Suitable for 50mm Substrates
- Allows for a 20mm Cavity

Rockcote PM100 Quick Render Base Coat

- Polymer-modified cement-based dry plaster mix. Supplied in 20 kg bags

- View Technical Data Sheet - View Safety Data Sheet

RCS Blue Mesh (1200mm wide)

- Alkali Resistant 6mm x 5mm Weave mesh supplied in 50m rolls

- View Technical Data Sheet

Rockcote PM100 Quick Render Level Coat

- Polymer-modified cement-based dry plaster mix. Supplied in 20 kg bags

- View Technical Data Sheet - View Safety Data Sheet

Rockcote RenderPrime

- Water based acrylic polymer dispersion. Supplied in 15 litre pails.

- View Safety Data Sheet

Bostik MS Sealant (Tubes)

- 550gm Cartridges

- View Technical Data Sheet - View Safety Data Sheet

ABA20220988
APPROVED - Site Copy
Hastings District Council
20/09/2022

Rockcote Classico

- 100% acrylic, high-build texture coating. Supplied in 15 Litre pails

- View Technical Data Sheet - View Safety Data Sheet

Resene X200 (2 Coats)

- Acrylic reinforced waterproof membrane. Supplied in 4 and 10 litre pails. Tinted to the selected colour

- View Technical Data Sheet - View Safety Data Sheet

Installation

The following Resene Construction Systems TradeSpec® Documents can be found at http://tradespec.co.nz
All Technical Data Sheets are available at https://reseneconstruction.co.nz/tds
All Safety Data Sheets are available at https://reseneconstruction.co.nz/sds

- Building Underlays and Flashing Tapes - Timber Frame - Refer to RCS TradeSpec™ document 1.1
- Design Information - Refer to RCS TradeSpec™ document 1.2
- Checking Joinery - Refer to RCS TradeSpec™ document 1.3
- Light and Heavyweight Fixings - Refer to RCS TradeSpec™ document 1.9
- Check Timber or Steel Framing - Refer to RCS TradeSpec™ document 2.1
- Cavity and Batten Installation - Refer to RCS TradeSpec™ document 2.2
- Fastening EPS / XPS / Graphex board - to timber / steel frame - Refer to RCS TradeSpec™ document 2.3
- Check and Prepare EPS / Graphex - Refer to RCS TradeSpec™ document 2.9
- Resene Construction Systems Flashings - Refer to RCS TradeSpec™ document 4.1
- Rockcote PM100 Quick Render Base Coat
- RCS Mesh (Standard Weave)
- Rockcote PM100 Quick Render Levelling Coat
- Rockcote RenderPrime
- Rockcote Classico Texture Finish
- Resene X200 Paint Finish (2 Coats)
- Light Reflectance Values (LRV) - Refer to RCS TradeSpec™ document 1.6
- Maintenance - Refer to RCS TradeSpec™ document 1.7
- Cleaning Up - Refer to RCS TradeSpec™ document 5.10

Important:

This specification must be read in conjunction with the Resene Construction Systems technical drawings.
No alteration to the Resene Construction Systems RenderSpec® is permitted.
This Resene Construction Systems RenderSpec® must be read in conjunction with Resene Construction Systems TradeSpec® available at http://tradespec.co.nz
All Technical Data Sheets are available at https://reseneconstruction.co.nz/tds
All Safety Data Sheets are available at https://reseneconstruction.co.nz/sds

ABA20220988
APPROVED - Site Copy
Hastings District Council
20/09/2022

Resene Construction Systems

Graphex Insulated Facade System

Technical Drawings

Foundation
Recessed Foundation
External Corner
Internal Corner
Window Sill
Window Jamb
Window Head
Soffit
Roof Apron
Vertical Control Joint
Meter Box

Further details are available on our website www.reseneconstruction.co.nz

ABA20220988
APPROVED - Site Copy
Hastings District Council
20/09/2022

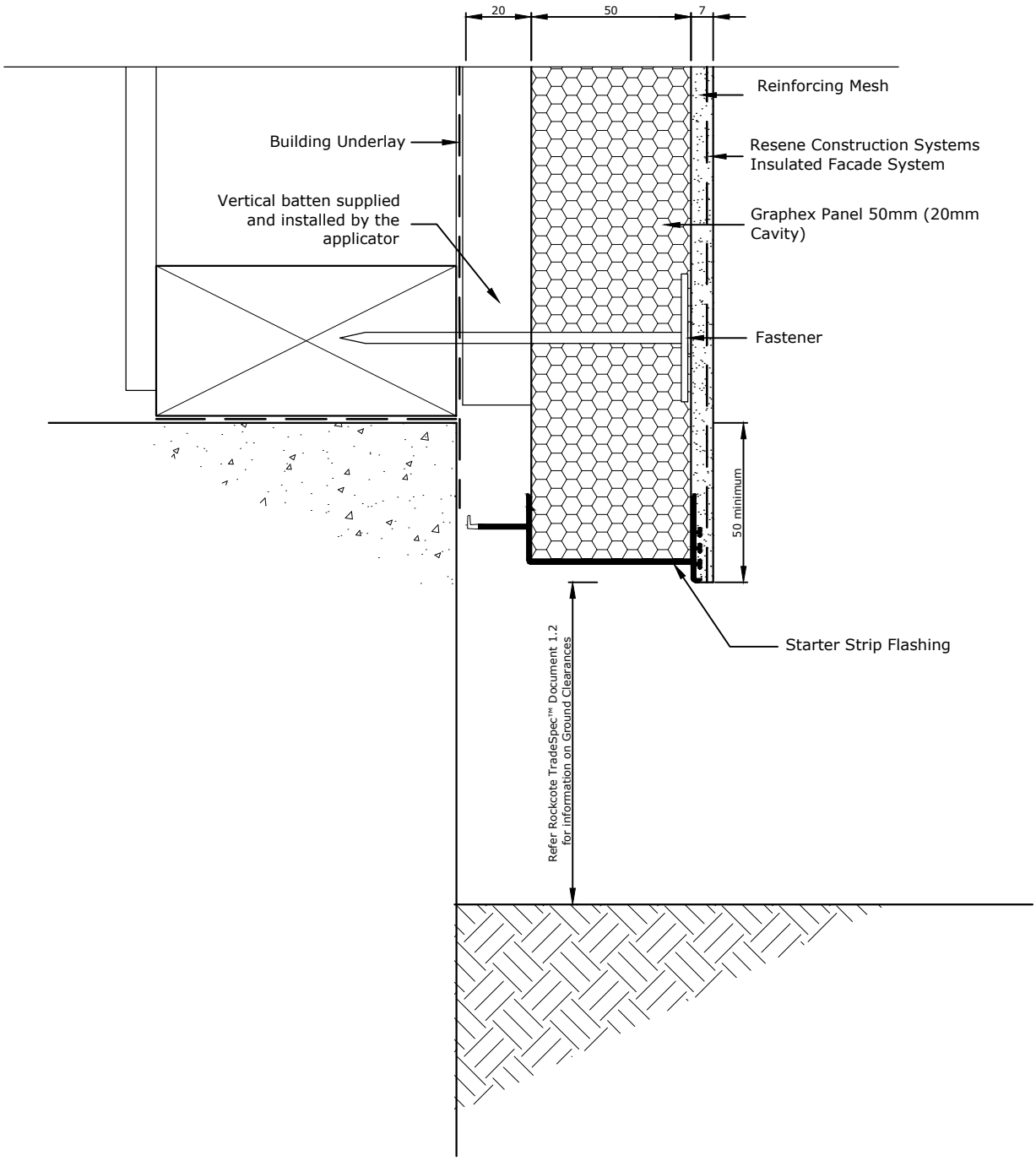

Refer TradeSpec™ Document 1.2 for information on Ground Clearances

TradeSpec™ and RenderSpec™ are Registered Trademarks, both Documents are available on the Resene Construction Systems

Resene Construction Systems

CONFIDENTIALITY: No part of this publication may be reproduced or transmitted other than the intended use by Resene Construction Systems without written consent from the author.

System
Insulated Facade System

Substrate
Graphex Panel 50mm (20mm Cavity)

Drawing Name
Foundation

Scale
1 : 2 @ A4

Date
1 November 2017

Sheet
71.02.00

ABA20220988
APPROVED - Site Copy
Hastings District Council
20/09/2022

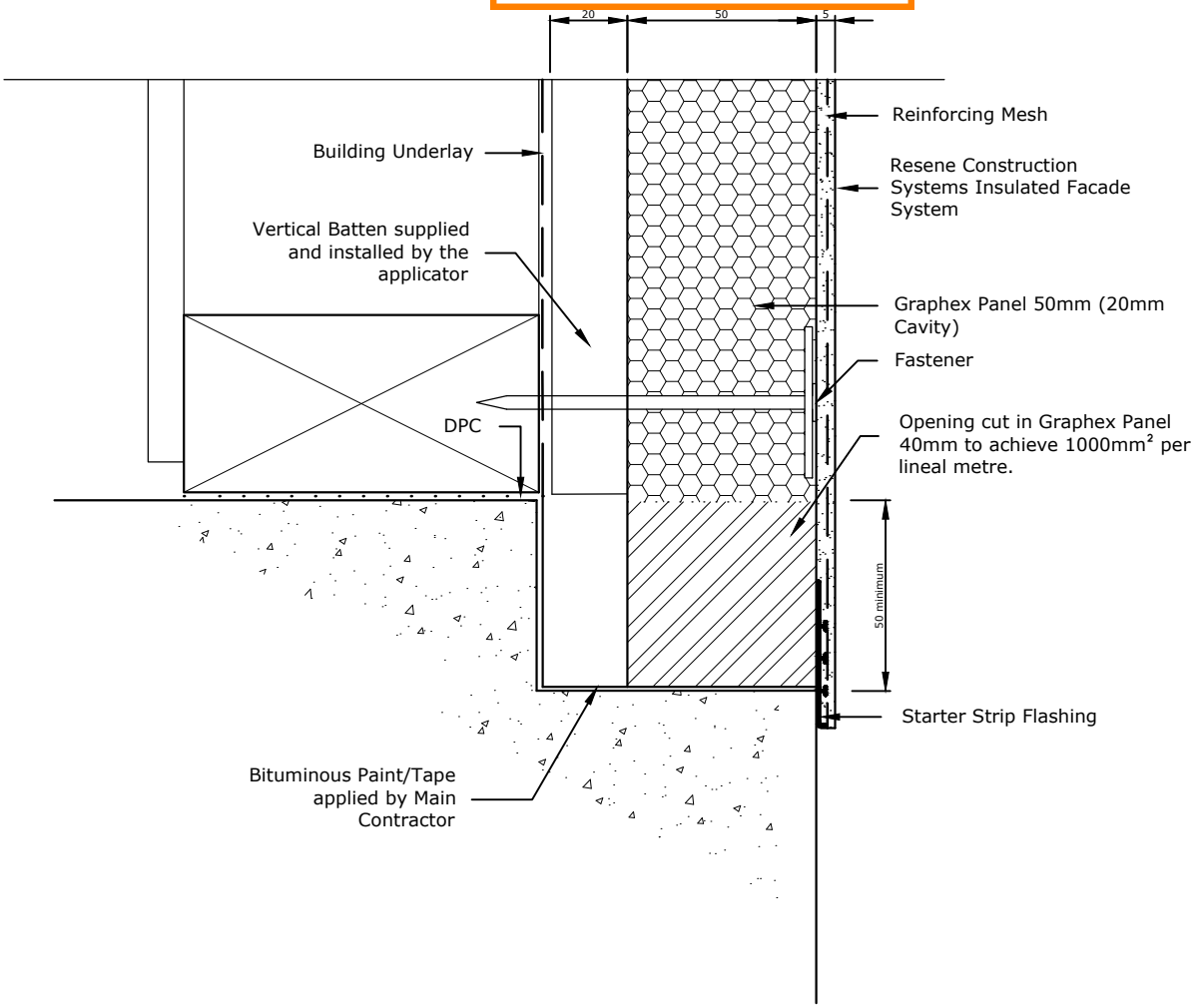

Refer to NZBC E2/AS1 for information on Ground Clearances

TradeSpec™ and RenderSpec™ are Registered Trademarks, both Documents are available on the Resene Construction Systems

Resene Construction Systems

CONFIDENTIALITY: No part of this publication may be reproduced or transmitted other than the intended use by Resene Construction Systems without written consent from the author.

System
Insulated Facade System

Substrate
Graphex Panel 50mm (20mm Cavity)

Drawing Name
Recessed Foundation - Option 3

Scale
1 : 2 @ A4

Date
1 November 2017

Sheet
71.02.12

ABA20220988
APPROVED - Site Copy
Hastings District Council
20/09/2022

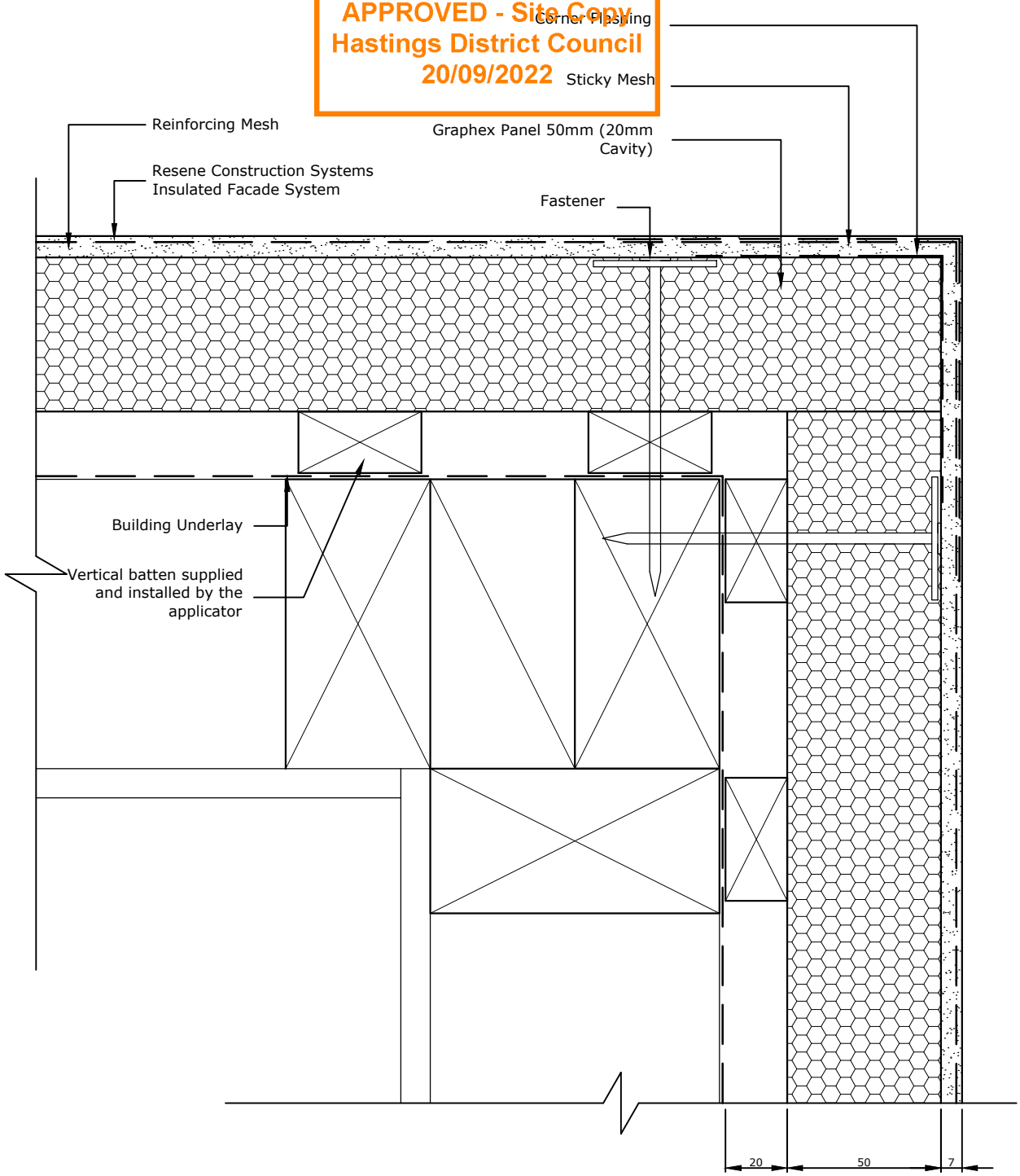

TradeSpec™ and RenderSpec™ are Registered Trademarks, both Documents are available on the Resene Construction Systems

Resene Construction Systems

CONFIDENTIALITY: No part of this publication may be reproduced or transmitted other than the intended use by Resene Construction Systems without written consent from the author.

System
Insulated Facade System

Substrate
Graphex Panel 50mm (20mm Cavity)

Drawing Name
External Corner

Scale
1 : 2 @ A4

Date
1 November 2017

Sheet
71.03.00

ABA20220988
APPROVED - Site Copy
Hastings District Council
20/09/2022

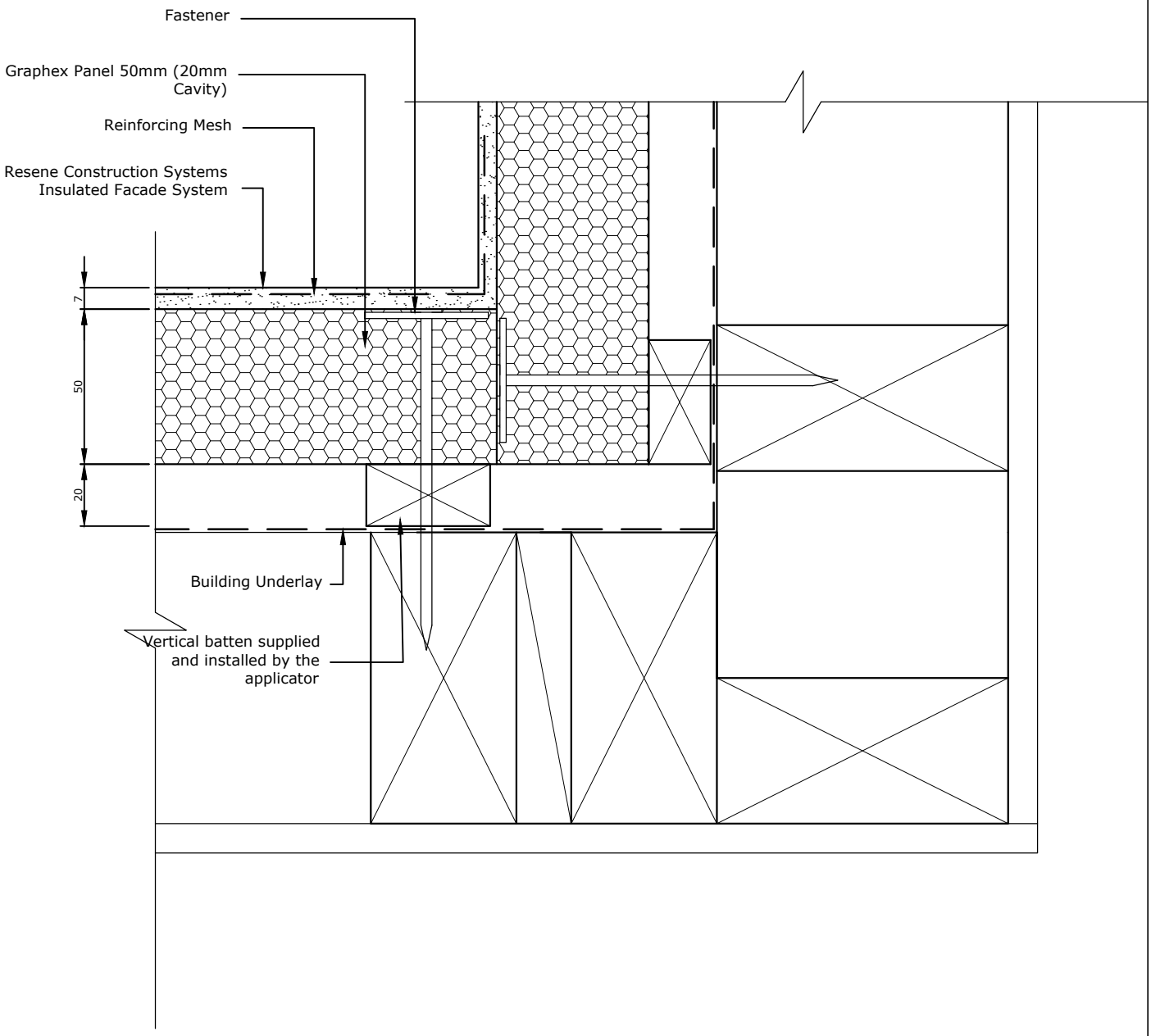

TradeSpec™ and RenderSpec™ are Registered Trademarks, both Documents are available on the Resene Construction Systems

Resene Construction Systems

CONFIDENTIALITY: No part of this publication may be reproduced or transmitted other than the intended use by Resene Construction Systems without written consent from the author.

System
Insulated Facade System

Substrate
Graphex Panel 50mm (20mm Cavity)

Drawing Name
Internal Corner

Scale
1 : 2 @ A4

Date
1 November 2017

Sheet
71.04.00

ABA20220988
APPROVED - Site Copy
Hastings District Council
20/09/2022

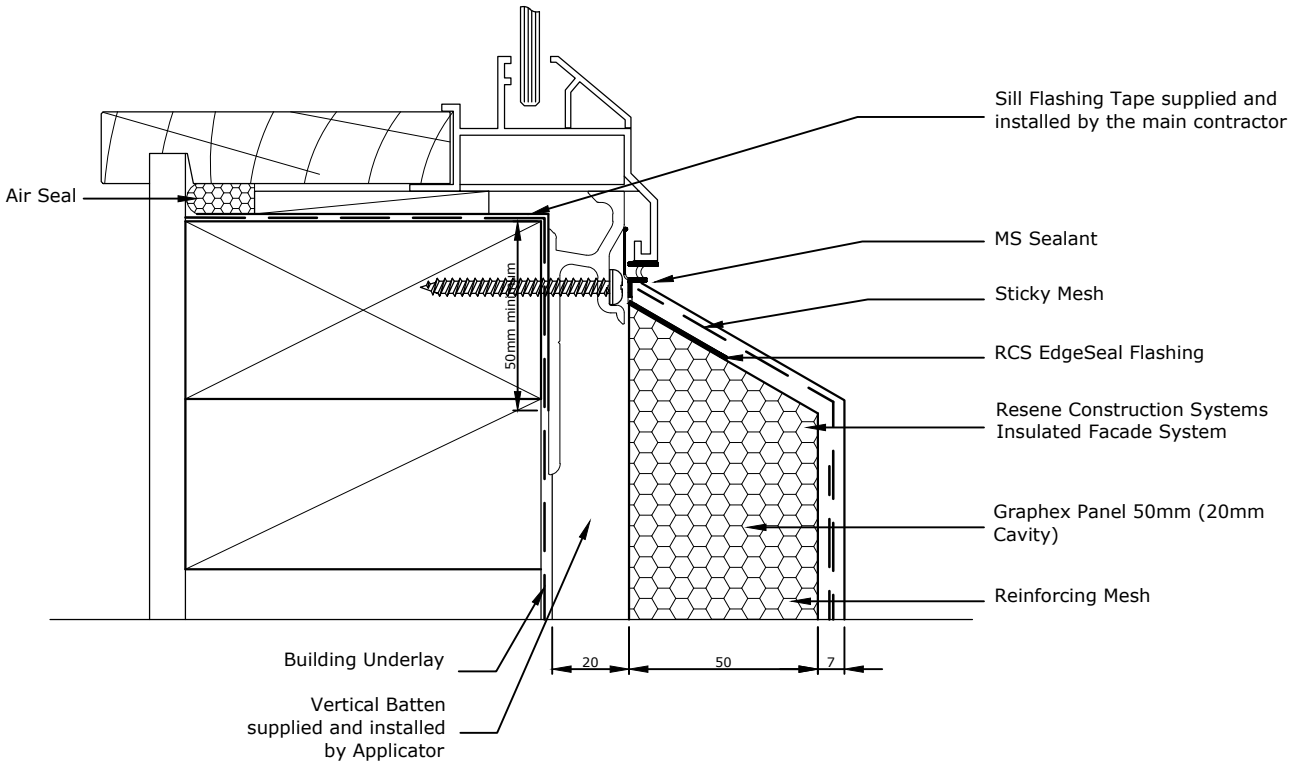

Allow a 25mm Gap between the back of the joinery and external facing timber framing to allow the sill flashing to fit.

TradeSpec™ and RenderSpec™ are Registered Trademarks, both Documents are available on the Resene Construction Systems

Resene Construction Systems

CONFIDENTIALITY: No part of this publication may be reproduced or transmitted other than the intended use by Resene Construction Systems without written consent from the author.

System
Insulated Facade System

Substrate
Graphex Panel 50mm (20mm Cavity)

Drawing Name
Window Sill

Scale
1 : 2 @ A4

Date
1 November 2017

Sheet
71.05.00

ABA20220988
APPROVED - Site Copy
Hastings District Council
20/09/2022

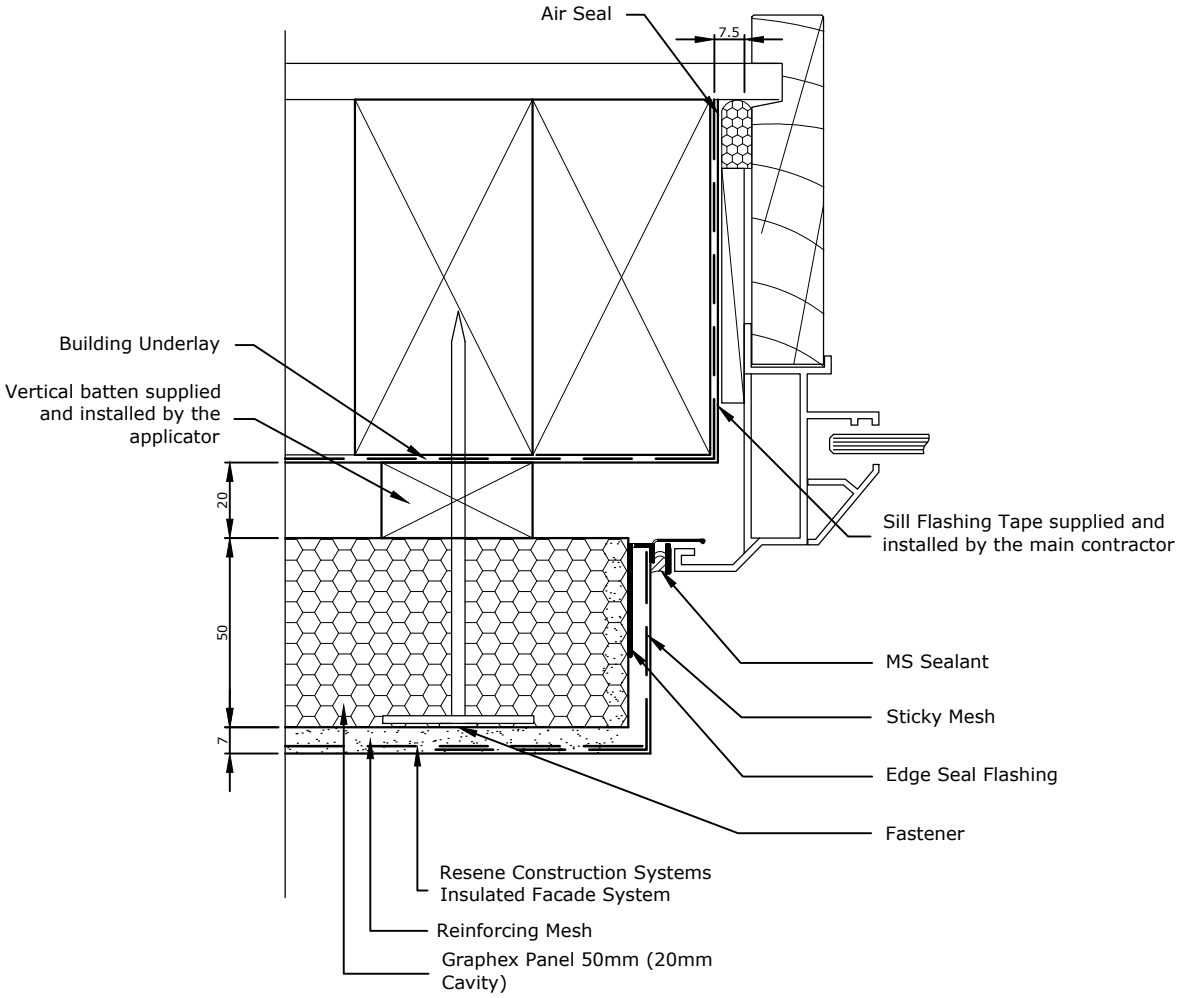

Allow a 25mm Gap between the back of the joinery and external facing timber framing to allow the jamb flashing to fit.

TradeSpec™ and RenderSpec™ are Registered Trademarks, both Documents are available on the Resene Construction Systems

Resene Construction Systems

CONFIDENTIALITY: No part of this publication may be reproduced or transmitted other than the intended use by Resene Construction Systems without written consent from the author.

System
Insulated Facade System

Substrate
Graphex Panel 50mm (20mm Cavity)

Drawing Name
Window Jamb

Scale
1 : 2 @ A4

Date
1 November 2017

Sheet
71.06.00

ABA20220988
APPROVED - Site Copy
Hastings District Council
20/09/2022

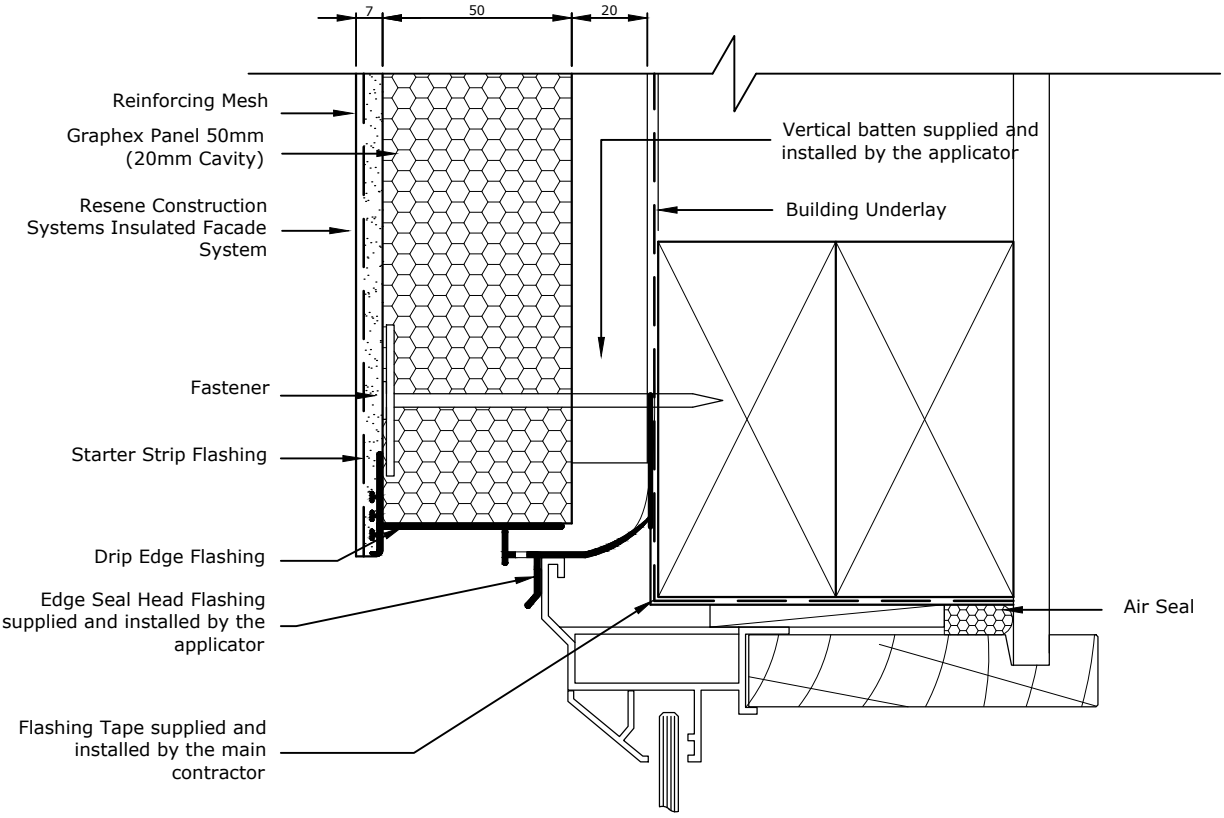

TradeSpec™ and RenderSpec™ are Registered Trademarks, both Documents are available on the Resene Construction Systems

Resene Construction Systems

CONFIDENTIALITY: No part of this publication may be reproduced or transmitted other than the intended use by Resene Construction Systems without written consent from the author.

System
Insulated Facade System

Substrate
Graphex Panel 50mm (20mm Cavity)

Drawing Name
Window Head - Option 1

Scale
1 : 2 @ A4

Date
1 November 2017

Sheet
71.07.00

ABA20220988
APPROVED - Site Copy
Hastings District Council
20/09/2022

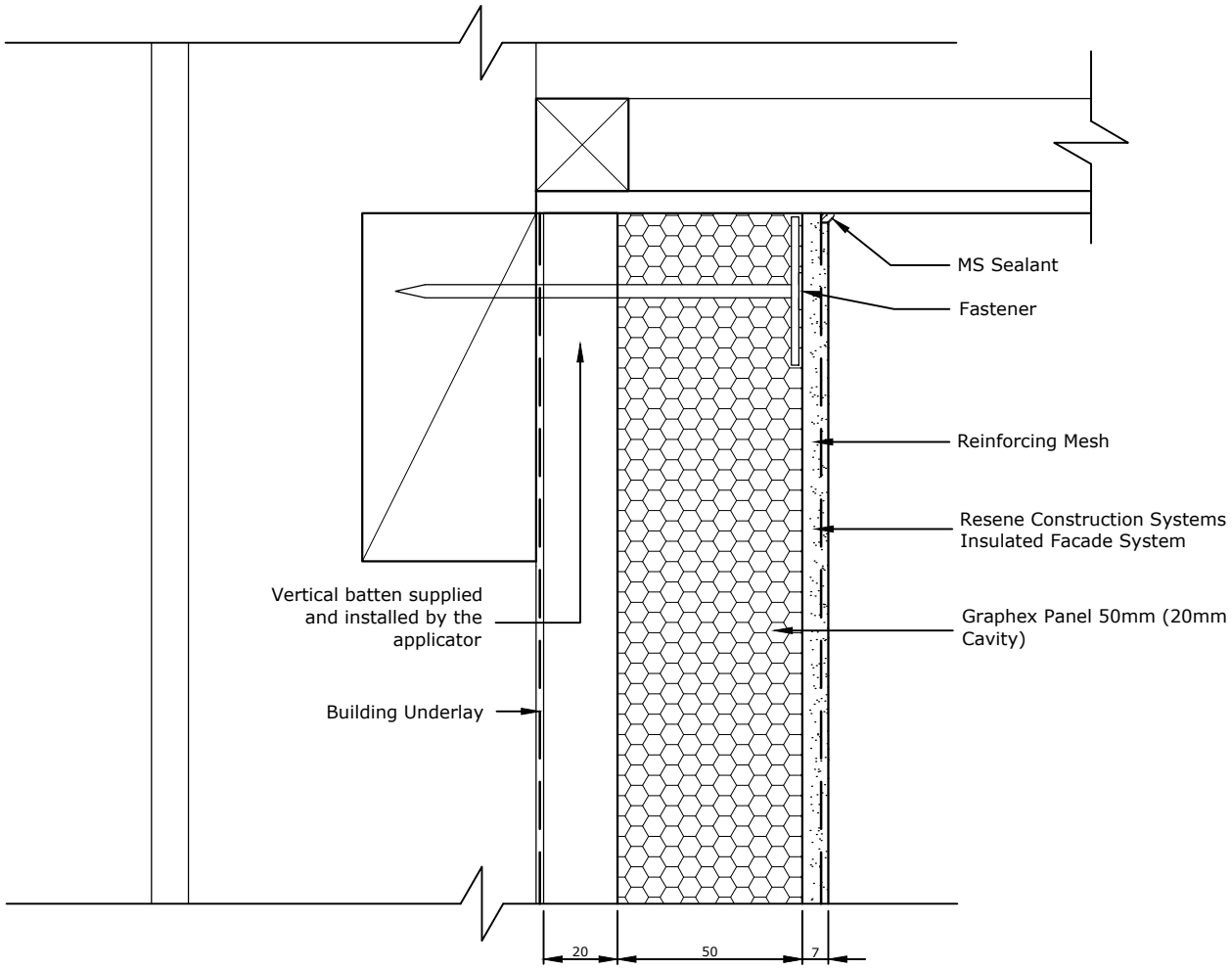

TradeSpec™ and RenderSpec™ are Registered Trademarks, both Documents are available on the Resene Construction Systems

Resene Construction Systems

CONFIDENTIALITY: No part of this publication may be reproduced or transmitted other than the intended use by Resene Construction Systems without written consent from the author.

System
Insulated Facade System

Substrate
Graphex Panel 50mm (20mm Cavity)

Drawing Name
Soffit

Scale
1 : 2 @ A4

Date
1 November 2017

Sheet
71.08.00

ABA20220988
APPROVED - Site Copy
Hastings District Council
20/09/2022

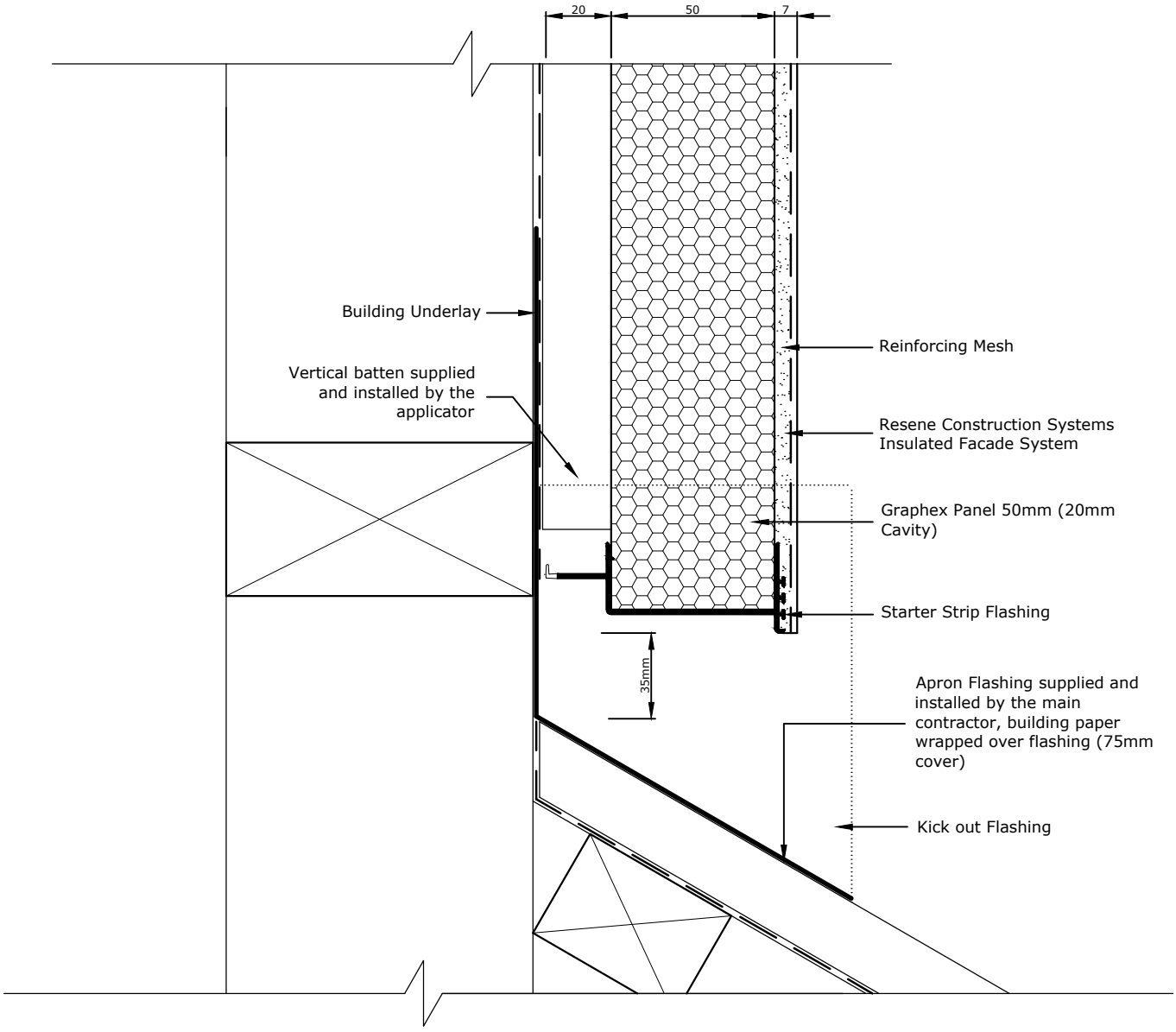

Refer TradeSpec™ Document 1.2 for information on Roof Clearances

Metal flashing must be taped to the Building Underlay by the main contractor/window installer

TradeSpec™ and RenderSpec™ are Registered Trademarks, both Documents are available on the Resene Construction Systems

Resene Construction Systems

CONFIDENTIALITY: No part of this publication may be reproduced or transmitted other than the intended use by Resene Construction Systems without written consent from the author.

System
Insulated Facade System

Substrate
Graphex Panel 50mm (20mm Cavity)

Drawing Name
Roof Apron

Scale
1 : 2 @ A4

Date
1 November 2017

Sheet
71.09.00

ABA20220988
APPROVED - Site Copy
Hastings District Council
20/09/2022

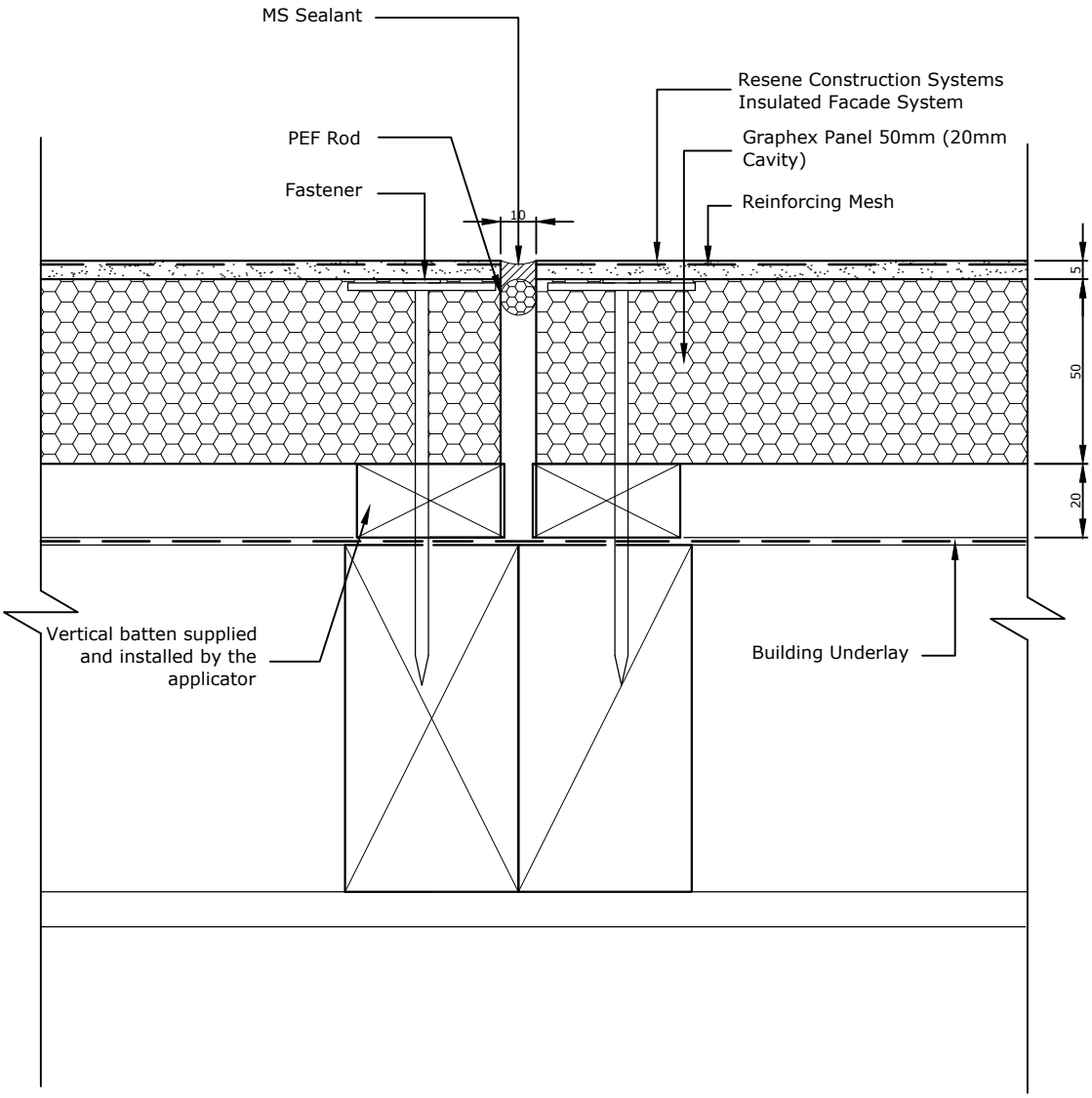

All Control Joint spacings and setouts are the responsibility of the Designer, for suggested locations refer to TradeSpec™ Document 1.4

TradeSpec™ and RenderSpec™ are Registered Trademarks, both Documents are available on the Resene Construction Systems

Resene Construction Systems

CONFIDENTIALITY: No part of this publication may be reproduced or transmitted other than the intended use by Resene Construction Systems without written consent from the author.

System
Insulated Facade System

Substrate
Graphex Panel 50mm (20mm Cavity)

Drawing Name
Vertical Control Joint - Option 1

Scale
1 : 2 @ A4

Date
1 November 2017

Sheet
71.10.00

ABA20220988
APPROVED - Site Copy
Hastings District Council
20/09/2022

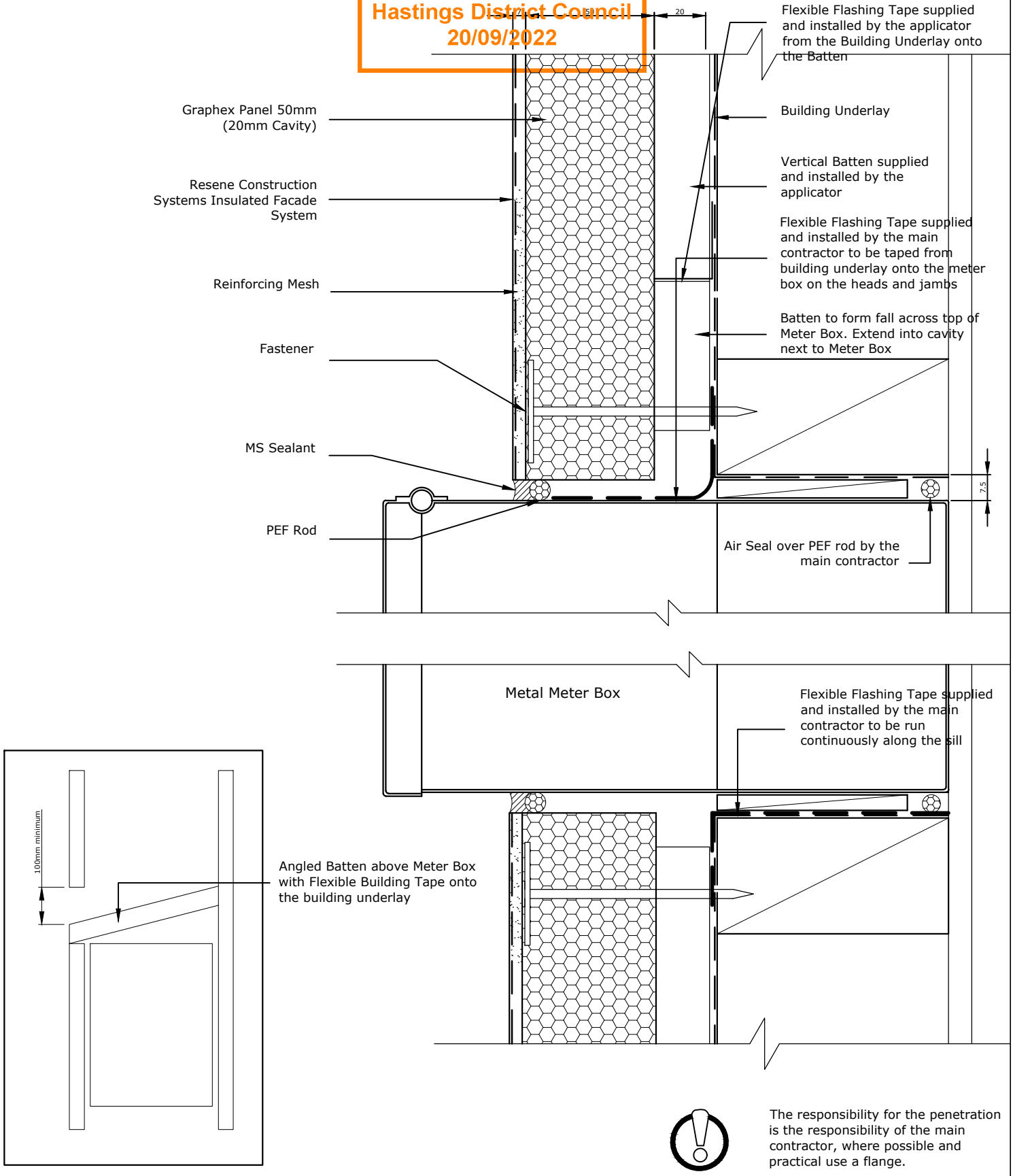

Angled Batten above Meter Box with Flexible Building Tape onto the building underlay

The responsibility for the penetration is the responsibility of the main contractor, where possible and practical use a flange.

TradeSpec™ and RenderSpec™ are Registered Trademarks, both Documents are available on the Resene Construction Systems

Resene Construction Systems

CONFIDENTIALITY: No part of this publication may be reproduced or transmitted other than the intended use by Resene Construction Systems without written consent from the author.

System
Insulated Facade System

Scale
1 : 2 @ A4

Substrate
Graphex Panel 50mm (20mm Cavity)

Date
1 November 2017

Drawing Name
Meter Box Penetration - Option 1

Sheet
71.12.10

Resene
Construction Systems

ABA20220988
APPROVED - Site Copy
Hastings District Council
20/09/2022

ROCKCOTE psl PLASTER SYSTEMS

Resene Construction Systems.
Head Office
PO Box 39108, Harewood, Christchurch. 8545
10b Abros Place, Burnside, Christchurch.
New Zealand
Telephone: 03 3386328
Fax: 03 3386819

Auckland
Telephone 09 259 2732
Fax 09 259 2713

Wellington
Telephone 04 567 3576
Fax 04 567 3578

The Resene Construction Systems network is New Zealand wide from Keri Keri in the North to Invercargill in the South.

Call our Onsite Assist 0800 50 70 40 for your nearest consultant or visit our website: www.reseneconstruction.co.nz

INTEGRA LIGHTWEIGHT CONCRETE SYSTEMS

graphex.

EARTHEN NATURAL CLAY PLASTER

Seismolock GRC Restrengthening System

CoolPlast Innovative Protection

Marrakesh Tadelakt

ezyplast Interior Hardwall Plaster

Milano ITALIAN POLISHED LIME

MULTISTOP PATCH, REPAIR & FINISH

villastop Stopping and Finishing Compound

multiplast

ABA20220988
APPROVED - Site Copy
Hastings District Council
20/09/2022

PRODUCT CERTIFICATE

THIS IS TO CERTIFY

PROLAM H5 GLUE LAMINATED POSTS

CODEMARK®

Certificate No: BRANZ-CM-1018
Date of Issue: 02 December 2019
Revision Date: 02 December 2022

CERTIFICATE HOLDER

Prolam

Prowood Limited

283 Waiwhero Road
Motueka
New Zealand

Tel: 03 526 7436
Email: info@prowoodnz.com
Web: www.prolamnz.com

CERTIFICATION BODY

BRANZ

BRANZ Limited

1222 Moonshine Rd,
RD1, Porirua 5381
Private Bag 50 908
Porirua 5240,
New Zealand

Tel: 04 237 1170
Email: assuranceservices@branz.co.nz
Web: branz.nz

Cheyldra Percy
Chief Executive Officer
BRANZ Limited

DESCRIPTION OF PRODUCT

Prolam H5 Glue Laminated Posts are glue laminated Radiata Pine structural timber posts used to support above ground, applied loads. Prolam H5 Glue Laminated Posts are available in sizes ranging from 88 x 88 mm to 260 x 260 mm. Stock lengths range between 2400 mm and 7200 mm with other lengths available by order. Prolam H5 Glue Laminated Posts are identified by identification tags that contain a detailed product specification stapled to the ends of each individual post.

USE OF PRODUCT

Prolam H5 Glue Laminated Posts are for use as exterior structural posts subject to structural specific engineering design. Prolam H5 Glue Laminated Posts can be installed either using proprietary cast-in structural post support brackets or with the posts directly encased in concrete footings below ground.

COMPLIES WITH THE FOLLOWING PROVISIONS OF THE NEW ZEALAND BUILDING CODE (NZBC)

Clause B1 STRUCTURE: Performance B1.3.1, B1.3.2 and B1.3.3 (b),(g),(h) and (j) [i.e. imposed gravity loads arising from use, snow, wind and impact]

Clause B2 DURABILITY: Performance B2.3.1 (a) 50 years.

Clause F2 HAZARDOUS BUILDING MATERIALS: Performance F2.3.1.

SUBJECT TO THE FOLLOWING CONDITIONS AND LIMITATIONS

- Prolam H5 Glue Laminated Posts are suitable as structural posts subject to specific engineering design for buildings of importance level 1 to 5 as described by AS/NZS1170. *Note: Guidance for specific engineering design using Prolam H5 Glue Laminated Posts is given in the product technical literature.*
- In-service structural loadings for Prolam H5 Glue Laminated Posts must not exceed those given in the product technical literature.
- Prolam H5 posts shall not be dimensionally altered in any way that results in a reduction of structural dimension. Dimensional stability and strength rely on the width and thickness remaining unchanged.
- Structural connection details, such as to post support brackets or to other framing members shall be in accordance with the details given in NZS 3604: 2011 Section 9 or specifically designed. Structural connection details are outside the scope of this certificate.
- Steel fixings and fastenings in contact with Prolam H5 Glue Laminated Posts shall be selected in accordance with section 4 of NZS 3604.
- Where installed directly into concrete below ground, Prolam H5 Glue Laminated Posts shall be encased by a minimum of 100 mm thickness of concrete to all sides and concrete shall finish at or above finished ground level.
- All exposed sections of post must be finished with an exterior grade enamel or acrylic paint system and compatible primer complying with any of Parts 7,8,9 or 10 of AS 3730 within 14 days of installation in accordance with the requirements of the technical literature.

JAS-ANZ
www.jas-anz.org/register

The Certificate Holder must maintain compliance with the conditions set out in Regulation 15 of the Building (Product Certification) Regulations 2008.

This Certificate is issued by BRANZ Limited, an independent certification body accredited by the product certification body appointed by the Chief Executive of the Ministry of Business, Innovation and Employment (MBIE) under the Building Act 2004. MBIE does not in any way warrant, guarantee or represent that the building method or product the subject of this certificate conforms with the New Zealand Building Code, nor accept any liability arising out of the use of the building method or product. MBIE disclaims, to the extent permitted by law, all liability (including negligence) for claims of losses, expenses, damages and costs arising as a result of the use of the building method(s) or products(s) referred to in this certificate.

It is advised to check that this Product Certificate is currently valid and not withdrawn, suspended or superseded by a later issue, by referring to the MBIE website, www.mbie.govt.nz

This certificate may only be reproduced in its entirety.

CODEMARK®

Certificate No: BRANZ-CM-1018
Date of Issue: 02 December 2019
Revision Date: 02 December 2022

CERTIFICATE HOLDER

Prolam

Prowood Limited

283 Waiwhero Road
Motueka
New Zealand

Tel: 03 526 7436
Email: info@prowoodnz.com
Web: www.prolamnz.com

CERTIFICATION BODY

BRANZ

BRANZ Limited

1222 Moonshine Rd,
RD1, Porirua 5381
Private Bag 50 908
Porirua 5240,
New Zealand

Tel: 04 237 1170
Email: assuranceservices@branz.co.nz
Web: branz.nz

Cheyldra Percy
Chief Executive Officer
BRANZ Limited

REFERENCE DOCUMENTS

This Product Certificate must be read in conjunction with:

- Prolam Structural Timber Guide – 2019.

ABA20220988
APPROVED - Site Copy
Hastings District Council
20/09/2022

APPENDIX A - PRODUCT TECHNICAL DATA

A1: PRODUCT SPECIFICATION

Prolam H5 Glue Laminated Posts are engineered glue laminated timber structural posts manufactured from Radiata Pine treated with chromated copper arsenate (CCA) preservative to hazard class H5. Prolam H5 Glue Laminated Posts are assembled from finger jointed, H5 treated lamina layers glued together using resorcinol phenol formaldehyde resin to make up the final post size. Prolam H5 Glue Laminated Posts are available in structural grades PL8 and PL17, which are equivalent to grades GL8 and GL17 given in AS/NZS 1328.

Prolam H5 Glue Laminated Posts are produced to a high visual appearance standard. Prolam H5 Glue Laminated Posts are supplied in a smooth machined finish or can be supplied bandsawn, primed or sanded and sealed. Prolam H5 Glue Laminated Posts shall be painted with an exterior grade enamel or acrylic paint system.

A2: STORAGE AND HANDLING

Prolam H5 Glue Laminated Posts are supplied in job lots, wrapped in protective plastic. Prolam H5 Glue Laminated Posts shall be stored on site laid flat, well supported and under cover until installation. Posts shall be protected from impact damage during storage and after installation to maintain the visual appearance of the posts.

A3: INSTALLATION REQUIREMENTS

Installation must be carried out in accordance with the following:

- Technical Literature: Prolam Structural Timber Guide – 2019.
- NZS 3604: 2011 Section 9 and the instructions included in the structural design by a Chartered Professional Engineer.

JAS-ANZ
www.jas-anz.org/register

The Certificate Holder must maintain compliance with the conditions set out in Regulation 15 of the Building (Product Certification) Regulations 2008.

This Certificate is issued by BRANZ Limited, an independent certification body accredited by the product certification body appointed by the Chief Executive of the Ministry of Business, Innovation and Employment (MBIE) under the Building Act 2004. MBIE does not in any way warrant, guarantee or represent that the building method or product the subject of this certificate conforms with the New Zealand Building Code, nor accept any liability arising out of the use of the building method or product. MBIE disclaims, to the extent permitted by law, all liability (including negligence) for claims of losses, expenses, damages and costs arising as a result of the use of the building method(s) or products(s) referred to in this certificate.

It is advised to check that this Product Certificate is currently valid and not withdrawn, suspended or superseded by a later issue, by referring to the MBIE website, www.mbie.govt.nz

This certificate may only be reproduced in its entirety.

CODEMARK®

Certificate No: **BRANZ-CM-1018**
Date of Issue: 02 December 2019
Revision Date: 02 December 2022

CERTIFICATE HOLDER

Prolam

Prowood Limited

283 Waiwhero Road
Motueka
New Zealand

Tel: 03 526 7436
Email: info@prowoodnz.com
Web: www.prolamnz.com

CERTIFICATION BODY

BRANZ

BRANZ Limited

1222 Moonshine Rd,
RD1, Porirua 5381
Private Bag 50 908
Porirua 5240,
New Zealand

Tel: 04 237 1170
Email: assuranceservices@branz.co.nz
Web: branz.nz

Cheyldra Percy
Chief Executive Officer
BRANZ Limited

ABA20220988
APPROVED - Site Copy
Hastings District Council
20/09/2022

APPENDIX B - OTHER RELEVANT TECHNICAL DATA

B1 STRUCTURE

Prolam H5 Glue Laminated Posts will resist structural loads likely to be encountered in normal use. The likelihood of impact damage to the posts and the possibility of consequential structural failure should be reviewed at the design stage, and appropriate mitigation should be considered for vulnerable areas.

B2 DURABILITY

Prolam H5 Glue Laminated Posts, when installed and maintained in accordance with the details given in the technical literature, meets code compliance with NZBC Clause B2.3.1(a), not less than 50 years as a building element that provides structural stability to a building.

APPENDIX C - BASIS OF CODEMARK CERTIFICATION

The following evaluations have been carried out on Prolam H5 Glue Laminated Posts to determine compliance with the NZBC:

- A durability assessment has been undertaken of Prolam H5 Glue Laminated Posts by BRANZ technical experts.
- Site visits have been carried out by BRANZ to assess the practicability of installation, and to examine completed installations.
- The referenced Technical Literature has been examined by BRANZ and found to be satisfactory.
- The quality of supply to the market is the responsibility of Prowood Limited.
- Building designers are responsible for the design of the building, and for the incorporation of Prolam H5 Glue Laminated Posts into their design in accordance with the instructions of Prowood Limited.
- Quality of installation is the responsibility of the installer in accordance with the instructions of Prowood Limited.

SOURCES OF INFORMATION

- AS/NZS 1170 Structural design actions.
- AS/NZS 1328: 1998 part 1 and 2 Glued laminated structural timber.
- AS 3730: 2006 (R2016) parts 7,8,9 and 10 Guide to the properties of paints for buildings.
- NZS 3604: 2011 Timber-framed buildings.
- NZS 3640: 2003 Chemical preservation of round and sawn timber
- Ministry of Business, Innovation and Employment Record of Amendments for Compliance Documents and Handbooks.
- The Building Regulations 1992.

JAS-ANZ
www.jas-anz.org/register

The Certificate Holder must maintain compliance with the conditions set out in Regulation 15 of the Building (Product Certification) Regulations 2008.

This Certificate is issued by BRANZ Limited, an independent certification body accredited by the product certification body appointed by the Chief Executive of the Ministry of Business, Innovation and Employment (MBIE) under the Building Act 2004. MBIE does not in any way warrant, guarantee or represent that the building method or product the subject of this certificate conforms with the New Zealand Building Code, nor accept any liability arising out of the use of the building method or product. MBIE disclaims, to the extent permitted by law, all liability (including negligence) for claims of losses, expenses, damages and costs arising as a result of the use of the building method(s) or products(s) referred to in this certificate.

It is advised to check that this Product Certificate is currently valid and not withdrawn, suspended or superseded by a later issue, by referring to the MBIE website, www.mbie.govt.nz

This certificate may only be reproduced in its entirety.

ABA20220988
APPROVED - Site Copy
Hastings District Council
20/09/2022

HomeRAB™ PRE-CLADDING | JH™

RAB™ BOARD | JH™



Installation Manual

DECEMBER 2020 | NEW ZEALAND

ABA20220988
APPROVED - Site Copy
Hastings District Council
20/09/2022

Content

1 INTRODUCTION **3**

2 SAFE WORKING PRACTICES **7**
2.1 Storage and delivery 9
2.2 Tips for safe and easy handling of HomeRAB Pre-Cladding and RAB Board 9

3 APPLICATIONS **10**
3.1 James Hardie Rigid Air Barrier 10
3.2 Stud to top plate fixing 10
3.3 Seismic deflections 10

4 FRAMING AND FIXINGS **11**
4.1 Framing 11
4.2 Fixings 11
4.3 Fastener durability 11
4.4 Clearances 13

5 INSTALLATION **14**
5.1 Board layout 14
5.2 Stud to top plate fixing 20
5.3 Flashings 22

6 BRACING **28**
6.1 Bottom Plate Fixing/Hold down restraints 28
6.2 Fastener Durability and Size 28
6.3 Sheet Nailing 28
6.4 Sheet Orientation 28
6.5 Service Penetrations 28

7 PRODUCT INFORMATION **37**
7.1 General 37
7.2 Durability 37
7.3 Alpine regions 37

8 FINISHES AND MAINTENANCE **37**

PRODUCT WARRANTY **39**

WE VALUE YOUR FEEDBACK

To continue with the development of our products and systems, we value your input. Please send any suggestions, including your name, contact details, and relevant sketches to:

Ask James Hardie™
literaturefeedback@jameshardie.co.nz

ABA20220988
APPROVED - Site Copy
Hastings District Council
20/09/2022

1 Introduction

James Hardie manufactures a range of rigid air barriers such as HomeRAB™ Pre-Cladding and RAB™ Board.

1.1 HomeRAB Pre-Cladding is a 4.5mm thick fibre cement sheet which is sealed on the face and edges and is used as a rigid air barrier for residential buildings within the scope of NZS 3604. HomeRAB Pre-Cladding is manufactured by James Hardie and complies with the requirements of AS/NZS 2908.2.

It acts as temporary weather protection during construction, ideal for renovations or new construction. It is suitable for use as rigid underlay in residential buildings as per section 9.1.4 of E2/AS1 and complies with the requirements of Table 23 of E2/AS1. HomeRAB Pre-Cladding is suitable to withstand wind pressures experienced in all wind zones up to and including Very High (VH) wind zone as specified in NZS 3604. HomeRAB Pre-Cladding doesn't get fatigued or tear under the wind pressures exerted on it in the long term. HomeRAB Pre-Cladding has been tested to withstand wind pressures up to VH wind zone.

1.2 RAB Board 6mm is a 6mm thick fibre cement sheet which is sealed on the face and edges and is suitable for use as a rigid air barrier in Extra High (EH) wind zones or in wind pressures up to 4.5kPa.

It complies with the requirements of Table 23 of E2/AS1.

It is suitable for use as rigid underlay as per the requirement of section 9.1.4 of E2/AS1. RAB Board 6mm is also suitable to withstand high wind pressures experienced on building facades where it creates a wind barrier which equalises pressure within the cavity to the external pressures. Flexible underlays can deteriorate caused by positive/negative pumping actions created by gusting winds within the cavity and on building facade.

Due to these pressures a flexible underlay may not perform as desired in the long term. RAB Board 6mm has been tested to withstand wind pressures up to 4.5kPa(ULS).

1.3 RAB Board 9mm is a 9mm thick fibre cement sheet which is sealed on the face and edges and is suitable for use as a rigid air barrier in Extra High (EH) wind zones or in wind pressures up to 4.5kPa.

RAB Board 9mm is suitable for specific design shear wall for residential or commercial applications where the structural design require strong/stiffer shear walls.

RAB Board 9mm is an ideal rigid backing substrate for use behind the façade cavities to improve the acoustic performance of the wall assembly. The continuity of RAB Board 9mm on the exterior of framing with its heavier mass cuts down the environmental noise, blocks noise flanking paths and therefore enhances the overall acoustic performance of building facades.

It complies with the requirements of Table 23 of E2/AS1.

It is suitable for use as rigid underlay as per the requirement of section 9.1.4 of E2/AS1. RAB Board is also suitable to withstand high wind pressures experienced on building facades where it creates a wind barrier which equalises pressure within the cavity to the external pressures. Flexible underlays can deteriorate caused by positive/negative pumping actions created by gusting winds within the cavity and on building facade.

Due to these pressures a flexible underlay may not perform as desired in the long term. RAB Board 9mm is suitable for use for wind pressures up to 4.5kPa(ULS).

1.4 James Hardie rigid air barriers provide the following benefits:

- Resistant to moisture damage and rotting when installed correctly
- Integral sealer applied on the face and edges repels moisture rapidly and helps resist moisture penetration
- Provides temporary weathertightness to the building envelope until the final claddings are installed
- Provides general rigidity to the entire structure
- An efficient way to achieve structural bracing

This manual covers the use of HomeRAB Pre-Cladding and RAB Board in external wall pre-cladding applications only. Further information relating to HomeRAB Pre-Cladding and RAB Board is also available in the following James Hardie design manuals:

- Fire and Acoustic Design Manual
- Bracing Design Manual

The Specifier or other responsible party for the project must ensure that the information in this manual is appropriate for the intended application and that specific design and detailing is undertaken for areas which are not covered in this manual.

James Hardie rigid air barriers have been tested to comply with the performance requirements of the New Zealand Building Code (NZBC).

James Hardie rigid air barriers have been BRANZ appraised. This should be read in conjunction with this installation manual. BRANZ Appraisal No. 611 can be viewed on www.jameshardie.co.nz or www.branz.co.nz.

1.5 Make sure your information is up to date

When specifying or installing James Hardie products, ensure you have the current manual. If you're not sure you do, or you need more information, visit www.jameshardie.co.nz or Ask James Hardie on 0800 808 868.

ABA20220988
APPROVED - Site Copy
Hastings District Council
20/09/2022

Table 1

HomeRAB Pre-Cladding				
Product	**Description**	**Sheet Sizes**		
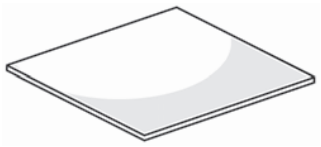	**HomeRAB Pre-Cladding** A fibre cement sheet with a green water repellent sealer applied on the face and edges. Installed with green side facing out. Approximate mass: 6.5 kg/m^2	**Thickness: 4.5mm**		
		Length (mm)	**Width (mm)**	**Code**
		2450	1200	**404766**
		2750	1200	**404768**
		3000	1200	**404916**

RAB Board 6mm				
Product	**Description**	**Sheet Sizes**		
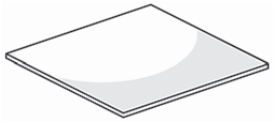	**RAB Board** A fibre cement sheet with a green water repellent sealer applied on the face and edges. Installed with green side facing out. Approximate mass: 8.6 kg/m^2	**Thickness: 6mm**		
		Length (mm)	**Width (mm)**	**Code**
		2450	1200	**402980**
		2750	1200	**405131**
		3000	1200	**402981**

RAB Board 9mm				
Product	**Description**	**Sheet Sizes**		
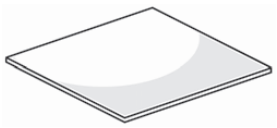	**RAB Board** A fibre cement sheet with a green water repellent sealer applied on the face and edges. Installed with green side facing out. Approximate mass: 12.2 kg/m^2	**Thickness: 9mm**		
		Length (mm)	**Width (mm)**	**Code**
		2450	1200	**405132**
		2750	1200	**404972**
		3000	1200	**404971**

NOTE: All dimensions and masses provided are approximate only and are subject to manufacturing tolerances. Masses are based on Equilibrium Moisture Content (EMC) of product.

Table 2

Accessories/tools supplied by James Hardie			
	**HomeRAB 4.5 Horizontal Flashing** 3000mm long for horizontal joints **CODE: 305798**	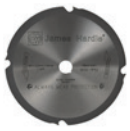	**HardieBlade™ Saw Blade** 185mm diameter, Poly diamond blade for fast, clean cutting of James Hardie fibre cement. **CODE: 300660**
	**RAB 6mm Horizontal Flashing** 3000mm long for horizontal joints **CODE: 305152**		**HardieKnife™** For easy cutting of fibre cement sheets. **CODE: 305926**
	**RAB 9mm Horizontal Flashing** 3000mm long for horizontal joints **CODE: 305945**		

ABA20220988
APPROVED - Site Copy
Hastings District Council
20/09/2022

Table 3

Components not supplied by James Hardie

James Hardie recommends the following products for use in conjunction with its James Hardie rigid air barriers. James Hardie does not manufacture these products and does not provide a warranty for their use. Please contact component manufacturer for information on their warranties and further information on their products.

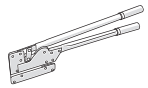	**Hand guillotine** Guillotine for cutting fibre cement.		**Sealing tape/window flashing tape** Tape used to seal vertical joints and flash around window, door and pipe penetrations. Thermakraft™ Premium Joining Tape, Thermaflash Self Adhesive Window Flashing tape - Thermakraft™ Ltd 0800 806 595 SUPER-STICK Building Tape® - Marshall Innovations 0800 776 9727 3M™ All Weather Flashing Tape 8067 - 3M™ 0800 474 787
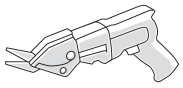	**Electric shear/fibreshear**		
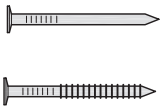	**Fibre cement nails** 40 x 2.8mm hot dipped galvanised HardieFlex™ nails as per Table 5. 40 x 2.8mm stainless steel HardieFlex™ nails as per Table 5.		**General installation - Nail gun and nails** • Galvanised/stainless steel round head gun nails minimum length required for specific application.
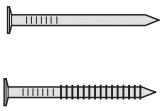	**Fibre cement nails** 50 x 2.8mm hot dipped galvanised HardieFlex™ nails as per Table 5. 50 x 2.8mm stainless steel HardieFlex™ nails as per Table 5.		**Bracing installation - Nail gun and nails** • Galvanised/stainless steel round head gun nail minimum length required for specific application. Refer to Section 4.3.
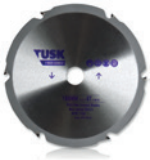	**Tusk 160mm diameter blade** Blade for fast, clean cutting of James Hardie fibre cement		**Penetration Seals** OneSeal Multi-Fit by Thermakraft: 0800 806 595 Trade-Seal by Marshall Innovations: 0800 776 9727

Figure 1: James Hardie Rigid Air Barriers with Linea™ Weatherboard

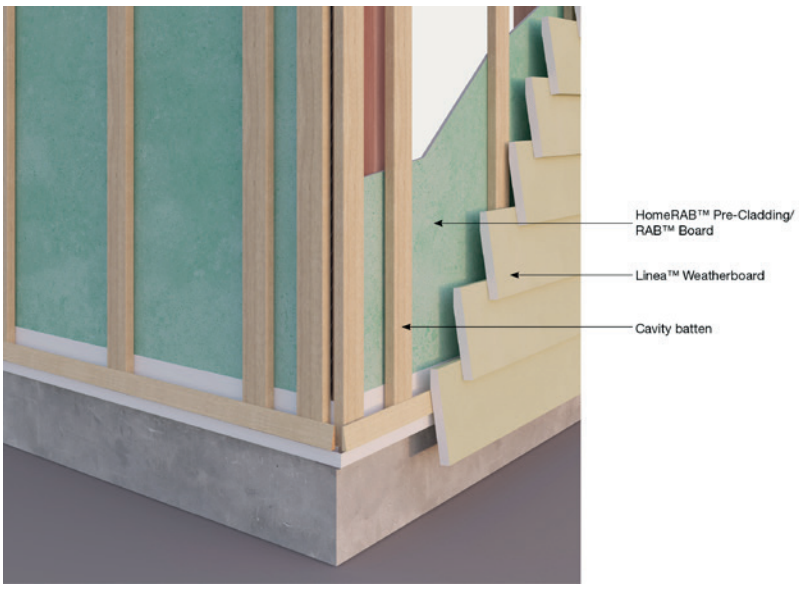

ABA20220988
APPROVED - Site Copy
Hastings District Council
20/09/2022

Figure 2: James Hardie Rigid Air Barriers with brick/block cladding

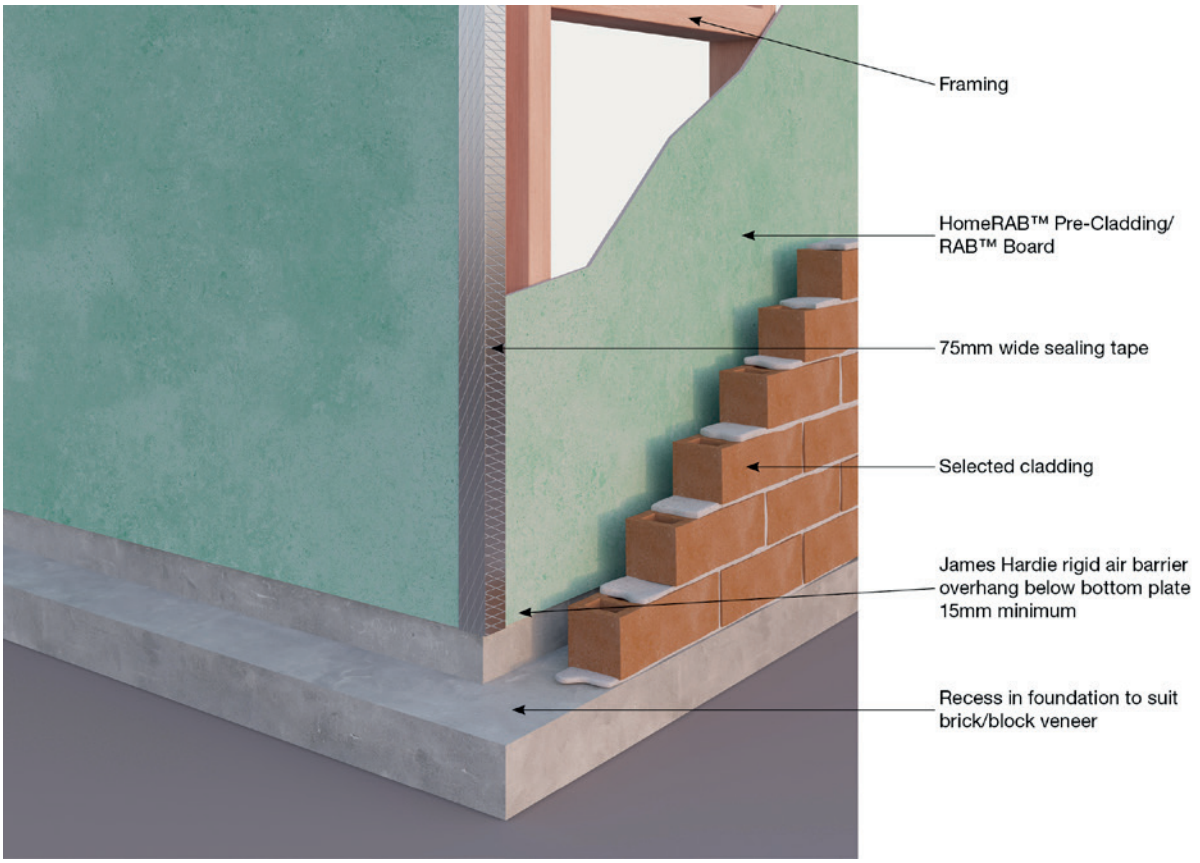

ABA20220988
APPROVED - Site Copy
Hastings District Council
20/09/2022

2 Safe working practices

WARNING - DO NOT BREATHE DUST AND CUT ONLY IN WELL VENTILATED AREA

James Hardie products contain sand, a source of respirable crystalline silica. May cause cancer if dust from product is inhaled. Causes damage to lungs and respiratory system through prolonged or repeated inhalation of dust from product.

Intact fibre cement products are not expected to result in any adverse toxic effects. The hazard associated with fibre cement arises from the respirable crystalline silica present in dust generated by activities such as cutting, rebating, drilling, routing, sawing, crushing, or otherwise abrading fibre cement, and when cleaning up, disposing of or moving dust.

When doing any of these activities in a manner that generates dust, follow James Hardie instructions and best practices to reduce or limit the release of dust.

If using a dust mask or respirator, use an AS/NZS 1716 P1 filter and refer to Australian/New Zealand Standard 1715:2009 Selection, Use and Maintenance of Respiratory Protective Equipment for more extensive guidance and more options for selecting respirators for workplaces. For further information, refer to our installation instructions and Safety Data Sheets available at www.jameshardie.co.nz.

FAILURE TO ADHERE TO OUR WARNINGS, SAFETY DATA SHEETS, AND INSTALLATION INSTRUCTIONS MAY LEAD TO SERIOUS PERSONAL INJURY OR DEATH.

Crystalline Silica is

- Commonly known as sand or quartz
- Found in many building products e.g. concrete, bricks, grout, wallboard, ceramic tiles, and all fibre cement materials

Why is Crystalline Silica a health hazard?

- Silica can be breathed deep into the lungs when present in the air as a very fine (respirable) dust
- Exposure to silica dust without taking the appropriate safety measures to minimise the amount being breathed in, can lead to a potentially fatal lung disease – silicosis – and has also been linked with other diseases including cancer. Some studies suggest that smoking may increase these risks
- The most hazardous dust is the dust you cannot see!

When is Crystalline Silica a health hazard?

- It's dangerous to health if safety protocols to control dust are not followed when cutting, drilling or rebating a product containing crystalline silica
- Products containing silica are harmless if intact (e.g. an un-cut sheet of wall board)

Avoid breathing in crystalline silica dust

Safe working practices

- ✕ NEVER use a power saw indoors or in a poorly ventilated area
- ✕ NEVER dry sweep
- ✓ ALWAYS use M Class or higher vacuum or damp down dust before sweeping up
- ✕ NEVER use grinders
- ✓ ALWAYS use a dust reducing circular saw equipped with a sawblade specifically designed to minimise dust creation when cutting fibre cement – preferably a sawblade that carries the HardieBlade™ logo or one with at least equivalent performance – connected to an M Class or higher vacuum
- ✓ Before cutting warn others in the area to avoid dust
- ✓ ALWAYS follow tool manufacturers' safety recommendations
- ✓ ALWAYS expose only the minimum required depth of blade for the thickness of fibre cement to be cut
- ✓ ALWAYS wear a properly-fitted, approved dust mask or respirator P1 or higher in accordance with applicable government regulations and manufacturer instructions
- ✓ Consider rotating personnel across cutting tasks to further limit respirable silica exposures.

Use one of the following methods for cutting HomeRAB Pre-Cladding and RAB Board 6mm

Best

- HardieKnife™
- Hand guillotine
- Fibreshear

Better

Dust reducing circular saw equipped with HardieBlade™ Saw Blade and connected to a M Class or higher vacuum.

When cutting outdoors

- ✓ Make sure you work in a well ventilated area
- ✓ Position cutting station so wind will blow dust away from yourself and others in the working area
- ✓ Rotate employees across cutting task over duration of shift
- ✓ Cut products with a HardieBlade Saw Blade (or equivalent) and a dust reducing circular saw connected to a M Class or higher vacuum
- ✓ When sawing, sanding, rebating, drilling or machining fibre cement products, always:
  - Wear your P1 or higher (correctly fitted in accordance with manufacturers' instructions), ask others to do the same.
  - Keep persons on site at least 2 metres and as far as practicable away from the cutting station while the saw is in operation
  - If you are not clean shaven, then use a powered air respirator with a loose fitting head top
  - Wear safety glasses
  - Wear hearing protection

ABA20220988
APPROVED - Site Copy
Hastings District Council
20/09/2022

✓ Make sure you clean up BUT never dry sweep. Always hose down with water/wet wipe or use an M Class or higher vacuum

When cutting indoors

✗ Never cut using a circular saw indoors

✓ Position cutting station in a well ventilated area

✓ Cut ONLY using a HardieKnife™, hand guillotine or fibreshears (manual, electric or pneumatic)

✓ Make sure you clean up BUT never dry sweep. Always hose down with water/wet wipe or use an M Class or higher vacuum

Use the following method for cutting RAB Board 9mm

Dust reducing circular saw equipped with HardieBlade Saw Blade and M Class or higher vacuum.

When cutting

✓ Work outdoors only

✓ Make sure you work in a well ventilated area

✓ Position cutting station so wind will blow dust away from yourself and others in the working area

✓ Rotate employees across cutting task over duration of shift

✓ Cut products with a HardieBlade Saw Blade (or equivalent) and a dust reducing circular saw connected to a M Class or higher vacuum

✓ When sawing, sanding, rebating, drilling or machining fibre cement products, always:

- Wear your P1 or higher (correctly fitted in accordance with manufacturers' instructions), ask others to do the same.
- Keep persons on site at least 2 metres and as far as practicable away from the cutting station while the saw is in operation.
- If you are not clean shaven, then use a powered air respirator with a loose fitting head top
- Wear safety glasses
- Wear hearing protection
- When others are close by, ask them to do the same

✓ Make sure you clean up BUT never dry sweep. Always hose down with water/wet wipe or use an M Class or higher vacuum

If concern still exists about exposure levels or you do not comply with the above practices, you should always consult a qualified industrial hygienist or contact James Hardie for further information.

Working instructions

HardieBlade™ Saw Blade

The HardieBlade™ Saw Blade used with a dust-reducing saw is ideal for fast, clean cutting of James Hardie fibre cement products. A dust-reducing saw uses a dust collector connected to a M Class or higher vacuum. When sawing, clamp a straight edge to the sheet as a guide and run the saw base plate along the straight edge when making the cut.

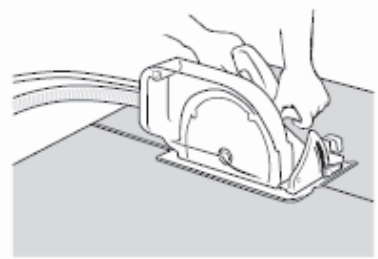

Hole forming

For smooth clean cut circular holes:

- Mark the centre of the hole on the sheet
- Pre-drill a 'pilot' hole
- Using the pilot hole as a guide, cut the hole to the appropriate diameter with a hole saw fitted to a heavy duty electric drill



For irregular holes:

- Small rectangular or circular holes can be cut by drilling a series of small holes around the perimeter of the hole then tapping out the waste piece from the sheet face
- Tap carefully to avoid damage to sheets, ensuring that the sheet edges are properly supported

ABA20220988
APPROVED - Site Copy
Hastings District Council
20/09/2022

2.1 STORAGE AND DELIVERY

Keeping products and people safe

Off loading

- ✓ James Hardie products should be off-loaded carefully by hand or by forklift
- ✓ James Hardie products should not be rolled or dumped off a truck during the delivery to the jobsite

Storage

James Hardie products should be stored:

- ✓ In their original packaging
- ✓ Under cover where possible or otherwise protected with a waterproof covering to keep products dry
- ✓ Off the ground – either on a pallet or adequately supported on timber or other spacers
- ✓ Flat so as to minimise bending

James Hardie products must not be stored:

- ✗ Directly on the ground
- ✗ In the open air exposed to the elements

James Hardie is not responsible for damage due to improper storage and handling.

2.2 TIPS FOR SAFE AND EASY HANDLING OF HOMERAB PRE-CLADDING AND RAB BOARD

- ✓ Carry with two people
- ✓ Hold near each end and on edge
- ✓ Exercise care when handling sheet products to avoid damaging the edges/corners

ABA20220988
APPROVED - Site Copy
Hastings District Council
20/09/2022

3 Applications

HomeRAB Pre-Cladding is suitable for use as a rigid air barrier for residential buildings up to and including VH wind zone within the scope of NZS 3604 and E2/AS1. HomeRAB Pre-Cladding is fixed directly to the framing. The vertical joints are sealed over the face of the HomeRAB Pre-Cladding. HomeRAB Pre-Cladding is suitable for use behind all James Hardie claddings or alternative claddings such as brick, timber weatherboard, EIFS etc.

RAB Board is suitable for use as a rigid air barrier in EH wind zone in residential or SED project applications to withstand high wind pressures in conjunction with cladding/commercial facades. In these applications, RAB Board is fixed directly to the framing. The vertical joints are sealed over the face of the RAB Board using joint flashing tape.

3.1 JAMES HARDIE RIGID AIR BARRIER

James Hardie rigid air barriers can remain exposed to the external elements for maximum 180 days prior to the external cladding being installed.

The James Hardie rigid air barriers can be used as a backing board behind stucco plasters. Refer to James Hardie Stucco Solution technical specification, E2/AS1 'External Moisture' clause of the NZBC and BRANZ 'Weathertight Solutions Stucco' for further information on stucco plaster. The RAB Board can also be used as a backing board behind other proprietary claddings which comply with the NZBC requirements. Proprietary cladding must be installed as per their manufacturing specifications. In these applications, a building underlay must be used as a slip layer to cover RAB Board and ensure a separation between mortars and RAB Board. The RAB Board is fixed over a minimum 18mm thick cavity batten for these applications. The RAB Board may also be required over the framing to withstand high wind pressures within the cavity.

The claddings/facades used over James Hardie rigid air barriers must satisfy the various performance requirements of the NZBC.

Horizontal profiled metal and uPVC claddings must not be direct fixed over James Hardie rigid air barriers. These must be fixed over an underlay or overlay the James Hardie rigid air barrier using the cavity construction method.

Vertical profiled metal cladding can be direct fixed over James Hardie rigid air barriers with a flexible underlay separator to comply with manufacturers recommendations.

The cladding fastener length must be increased by 5mm minimum to maintain the required nail pull out strength.

In case of gable end trusses sitting on top plates of external wall frame, the frame size must comply with the minimum timber sizes stipulated for wall frames in Section 8 of the NZS 3604.

3.1.1 Temporary weather protection

Installation of internal lining can be started after James Hardie rigid air barriers have been installed on the exterior of the building envelope. In order to achieve this, all sheet joints and penetrations must be sealed and the roof, soffit lining, windows/doors (including head flashings and airseals) must have been installed to ensure the building is weathertight before starting the installation of internal linings. The insulation, electrical cables, plumbing and any other services required in external walls must be installed and inspected by the building consent authority before starting the installation of internal linings. The internal lining and services must be installed in accordance with their manufacturer's product literature and comply with the NZBC requirements.

The claddings must be installed within 180 days after the installation of James Hardie rigid air barriers.

3.1.2 Bracing

For bracing application the James Hardie rigid air barriers must be installed as per HomeRAB Pre-Cladding/RAB Board bracing details in the James Hardie Bracing Design Manual. Bracing with rigid air barriers can only be achieved when fixed direct to frame. The board must be fixed in accordance with the bracing details to all framing. For further information on bracing refer to Section 6 and the James Hardie Bracing Design Manual or Ask James Hardie on 0800 808 868.

3.1.3 Fire rated wall construction

RAB Board is classified as 'Non-Combustible Material'. For fire rated wall applications RAB Board must be installed as per the current James Hardie Fire and Acoustic Design Manual. RAB Board is suitable to achieve fire ratings up to 60 minutes when installed in accordance with fire systems specifications published in the James Hardie Fire and Acoustic Design Manual. The board must be fixed with HardieFlex nails at 150mm centres to all framing.

3.2 STUD TO TOP PLATE FIXING

Refer to Section 5.2, Figures 16 and 17 for alternative stud to top plate connection.

3.3 SEISMIC DEFLECTIONS

RAB Board is suitable for use as rigid backing in buildings where the structure is designed to expect the lateral inter-storey seismic deflections. The seismic deflections can have a significant effect on the performance of the façade system and its components, therefore it is crucial to first understand the amount of inter-storey deflections and then to choose a suitable rigid air barrier and façade system that has been tested to meet the performance appraised.

James Hardie has a range of tested cladding/façade systems with RAB Board that are suitable for a range of seismic deflection. For further design and installation guidance, refer to clause 5.3.3 of this manual and Figure 26.

ABA20220988
APPROVED - Site Copy
Hastings District Council
20/09/2022

4 Framing and fixings

4.1 FRAMING

The timber framing shall be in accordance with NZS 3604 or comply with the specific engineering design requirements. The timber treatment must comply with NZBC Acceptable Solution B2/AS1 requirements.

The minimum framing size required for fixing James Hardie rigid air barriers is 90 x 45mm. Ensure that the framing is suitable for installing the selected cladding. Refer to cladding installation manual for further information about the framing requirements.

For specific engineering design projects where the timber framing differs from whats been provided in this manual, Ask James Hardie on 0800 808 868.

Table 4

Product	Wind zone	Framing centres (max)
HomeRAB Pre-Cladding	Up to and including H (High)	600mm
HomeRAB Pre-Cladding	Very High	400mm
RAB Board	Up to and including VH (Very High)	600mm
RAB Board	EH (Extra High) & SED (above 1.5kPa to 4.5kPa)	400mm

NOTE:

- HomeRAB Pre-Cladding must not be used in EH, SED wind zones and on fire rated wall application. Use RAB Board instead

4.2 FIXINGS

James Hardie rigid air barriers must be installed with its sealed face towards the external cladding and unsealed face towards the framing. The sealer applied on the face helps the board to drain the moisture freely over the face and keeps it dry.

- Nails must finish flush with board surface

The HomeRAB Pre-Cladding and RAB Board are fixed as described below.

HomeRAB Pre-Cladding and RAB Board can either be gun nailed or hand nailed. It is recommended to use gun nails to cut down installation time. When gun nailing use round head nails and follow nail gun manufacturer's instructions for correct operation of tool and site safety requirements.

- Nails must have a minimum clearance of 12mm from the sheet edges and a minimum of 50mm horizontally and 75mm vertically from the sheet corners
- When using a nail gun the gun nails must have a full round head to provide the required holding power, and minimum length of the hand nail

Note:

- Refer to Table 5 regarding nail sizes and fixing centres for various applications

Table 5

HomeRAB Pre-Cladding/RAB Board 6mm			
Application	**Type of nail**	**Nailing centres to all framing**	**Nailing option**
General	40 x 2.8mm HardieFlex nail	200mm	Gun nail or hand nail
Fire rating	40 x 2.8mm HardieFlex nail	150mm	Gun nail or hand nail
Bracing	40 x 2.8mm HardieFlex nail	100mm 150mm	Gun nail or hand nail
Stucco plaster (over cavity)	60 x 3.15mm HardieFlex nail	200mm	Gun nail or hand nail

RAB Board 9mm			
Application	**Type of nail**	**Nailing centres to all framing**	**Nailing option**
General	50 x 2.8mm HardieFlex nail	200mm	Gun nail or hand nail
Fire rating	50 x 2.8mm HardieFlex nail	150mm	Gun nail or hand nail
Bracing	50 x 2.8mm HardieFlex nail	100mm 150mm	Gun nail or hand nail

NOTE:

- Nails must finish flush with board surface
- Nails must have minimum clearance of 12mm from the sheet edges and a minimum of 50mm horizontally and 75mm vertically from the sheet corners
- **Do not use D-head nails**

4.3 FASTENER DURABILITY

Fasteners must have the appropriate level of durability required for the intended project to comply with the NZBC. This is of particular importance in coastal areas, areas subject to salt spray and other corrosive environments. Refer to Table 6 for information regarding the types of nails to use to comply with the durability requirements of the NZBC.

ABA20220988
APPROVED - Site Copy
Hastings District Council
20/09/2022

Table 6

Exposure conditions and nail selection prescribed by NZS 3604		
Zone	**Application**	**Nail material**
D (Sea Spray) * and Geothermal hot spots	General	Stainless steel 304/316
	Fire	
	Bracing	
C and B	General	Hot dip galvanised**
	Fire	
	Bracing	

*Where local knowledge dictates that increased durability is required use stainless steel nails

** Hot dip galvanised must comply with AS/NZS 4680

Fasteners must be fully compatible with all other materials that they are in contact with to ensure the durability and integrity of the assembly. Contact fastener manufacturers for more information. Also refer to Table 20 and 21 of E2/AS1 for further information about the suitable fastening materials and their compatibility with other materials.

Figure 3: James Hardie rigid air barriers layout

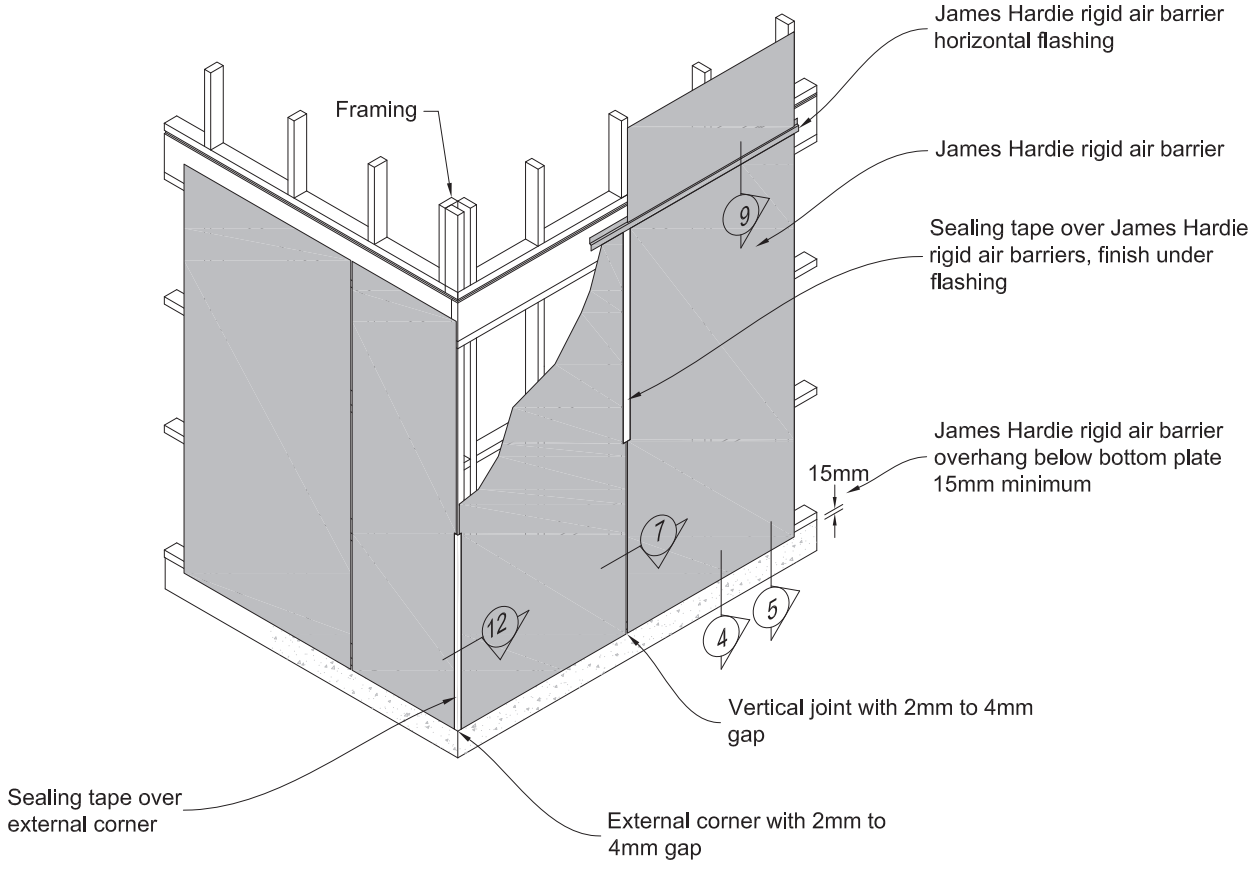

ABA20220988
APPROVED - Site Copy
Hastings District Council
20/09/2022

4.4 CLEARANCES

James Hardie rigid air barriers must extend below the bottom plate by 15mm minimum over concrete foundation and 15mm past floor joist of timber foundation. James Hardie rigid air barriers must maintain a 100mm minimum clearance between the bottom edge of the sheet and the finished ground.

Check cladding manufacturer for minimum clearances required for the selected cladding.

Maintain the required clearances between the bottom plate and top of ground to comply with the NZBC and NZ standards. The adjacent finished ground must slope away from the building in accordance with the NZBC requirements. Do not install James Hardie rigid air barriers in such a way that it may remain in contact with standing water.

Figure 4: Foundation detail — direct fix cladding

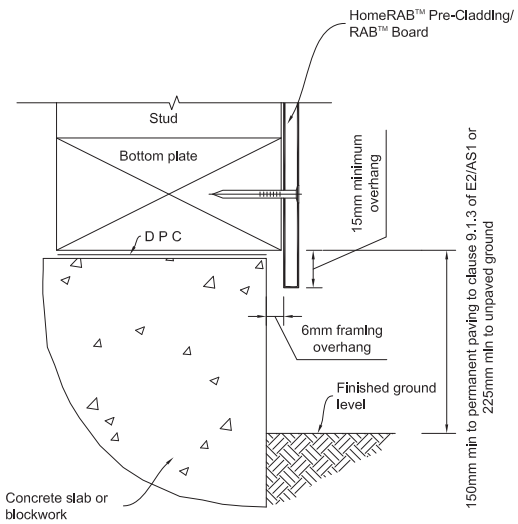

Figure 5: Foundation detail — cavity fix cladding

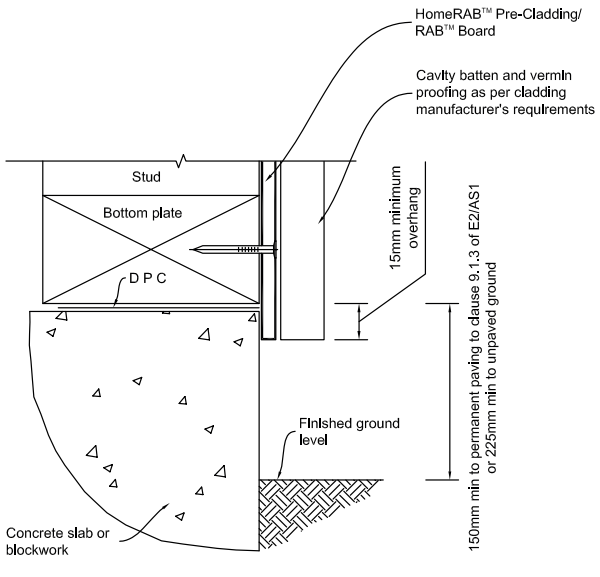

Figure 6: Foundation detail – timber foundation

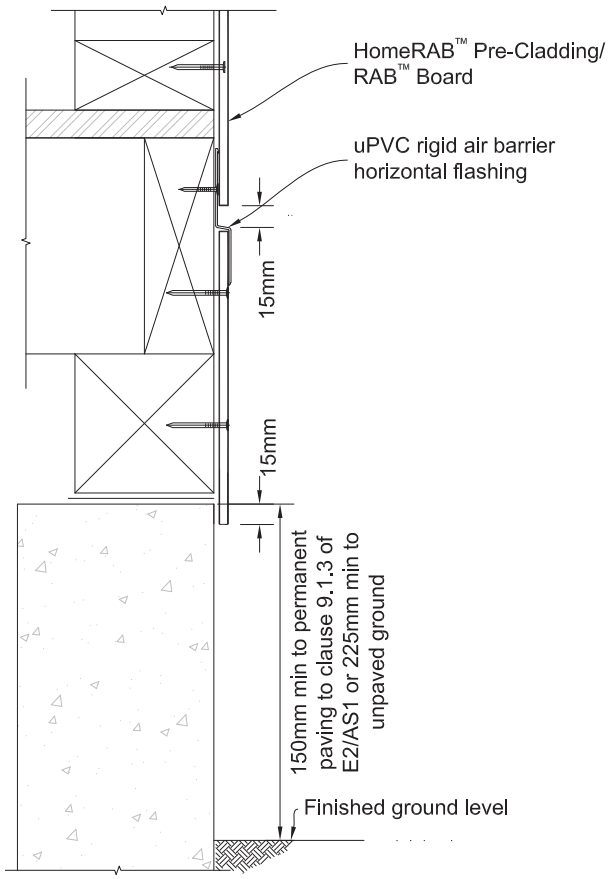

ABA20220988
APPROVED - Site Copy
Hastings District Council
20/09/2022

5 Installation

5.1 BOARD LAYOUT

When using James Hardie rigid air barrier, building underlays are not required over the framing. HomeRAB Pre-Cladding/ RAB Board have been tested and comply with the performance requirements of Table 23 of Clause E2 of the NZBC. The sheets are jointed keeping a gap of 2-4mm maximum between the sheet edges. The board must be cleaned of any dust before fixing the jointing tape over the joint.

Cut edges where exposed must be primed prior to installation with Dulux® 1 Step, Resene Quick Dry or similar.

The bottom edge of James Hardie rigid air barriers must overhang below the bottom plate by 15mm minimum, refer to Figures 4 and 5.

5.1.1 Vertical joints

Vertical joints must be sealed to stop the moisture ingress into the framing behind James Hardie rigid air barrier. The vertical joints are sealed over by running a 75mm wide sealing tape e.g. Thermakraft Premium Joining Tape, SUPER-STICK Building Tape/3M All Weather Flashing Tape 8067.

The sealing tapes must be pressed hard over the James Hardie rigid air barriers surface while fixing so that they achieve the required bond. The sealing tapes must not be exposed to elements for more than 180 days. This achieves the required protection when the cladding is installed. The claddings must be installed within 180 days.

NOTE: Refer to sealing tape manufacturers recommendations regarding the installation of their sealing tapes in cold climate conditions. It is recommended to warm up the sealing tapes eg when the air and substrate temperatures are below 10°C. Check with tape manufacturer for their recommendations

5.1.2 Horizontal joints

The horizontal joint of James Hardie rigid air barriers must be flashed using a uPVC horizontal flashing or alternatively aluminium or colour steel Z flashings can also be used. Refer to Figures 8, 9 and 10. Leave a gap of 15mm minimum at the solid timber floor joist or as specified by the project engineer. The flashing must be lapped by a 35mm minimum on both sides of the joint.

For walls longer than 3m, horizontal uPVC flashing must be lapped by 50mm minimum and silicone sealed.

Rigid air barriers must not be fixed into floor joists.

5.1.3 Internal/external corners

James Hardie rigid air barrier corner joints must be sealed using a 75mm minimum wide sealing tape.

When using a uPVC horizontal flashing in horizontal joints, the internal and external corner flashing joints must be sealed using a 75mm minimum wide joint sealing tape. Refer to Figures 13a, 13b and 13c.

When using James Hardie rigid air barrier as a backing board for stucco plaster, the vertical joints of James Hardie rigid air barrier are not required to be sealed using flashing tapes. The horizontal joints at floor level and in tall walls must be flashed to satisfy the requirements of clause E2 of the NZBC.

Figure 7: Vertical joint

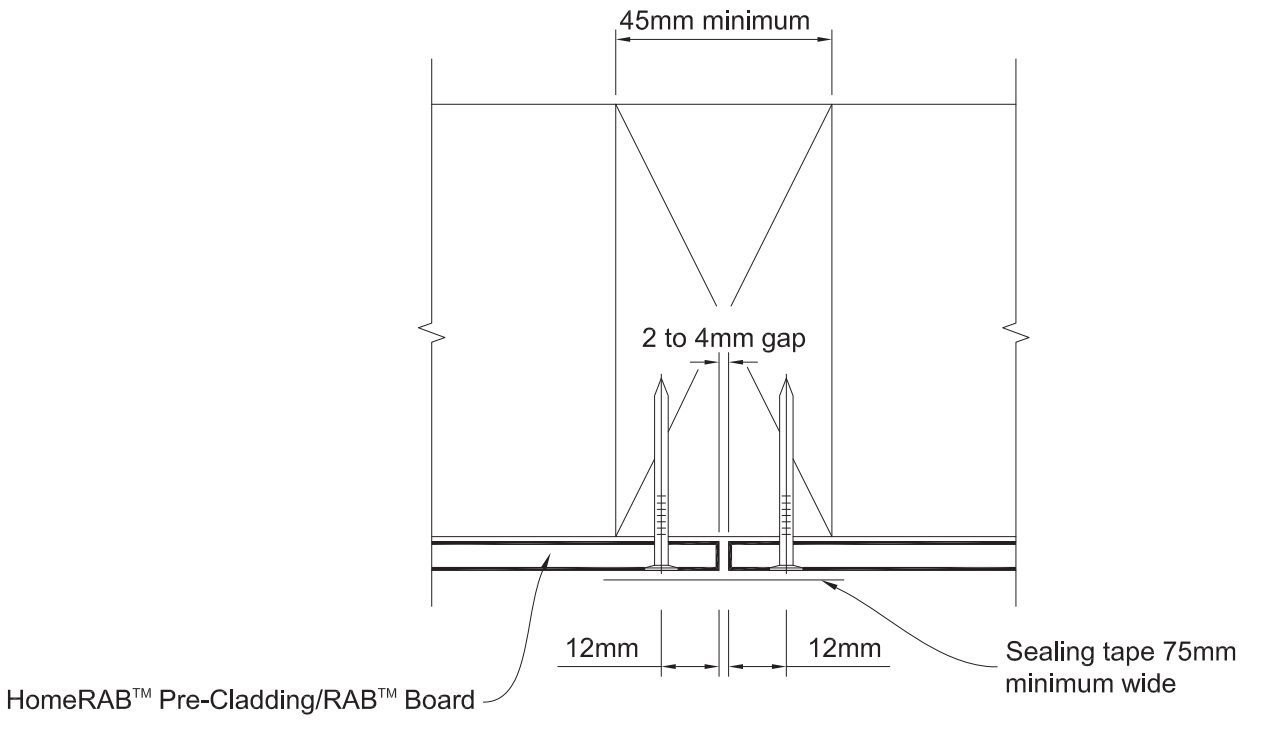

ABA20220988
APPROVED - Site Copy
Hastings District Council
20/09/2022

5.1.4 Flexible underlay

James Hardie rigid air barriers can also be used in conjunction with flexible underlay in accordance with Section 9.1.7.2 of E2/AS1. When installing rigid underlay as per E2/AS1 requirements, its horizontal and vertical joint does not require to be sealed with flashing tapes, but instead, a flexible underlay is applied over the entire rigid air barrier in accordance with Section 9.1.7.1. The flexible underlay must comply with Table 23 of E2/AS1. The wall openings must be flashed in accordance with E2/AS1 and this installation manual.

Figure 8: Horizontal joint flashing - tall wall

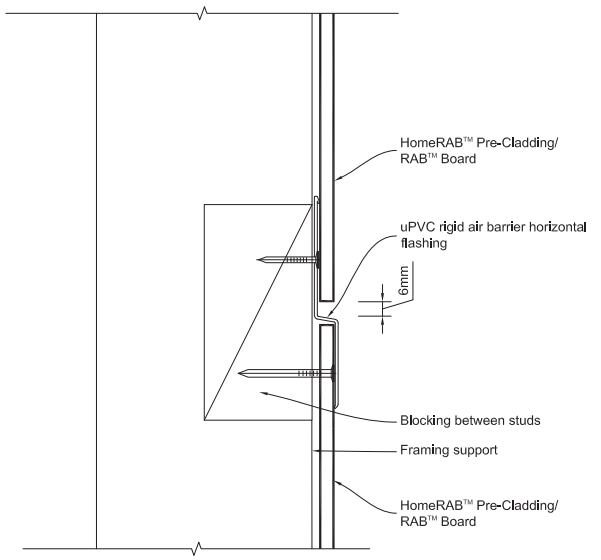

Figure 9: Horizontal joint/flashing - floor joist

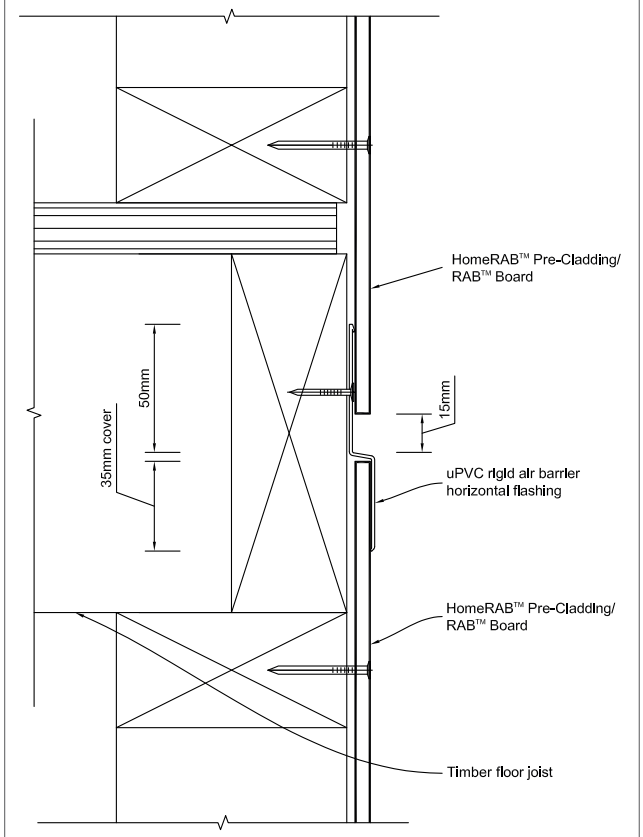

ABA20220988
APPROVED - Site Copy
Hastings District Council
20/09/2022

Figure 10: Horizontal joint flashing - concrete beam

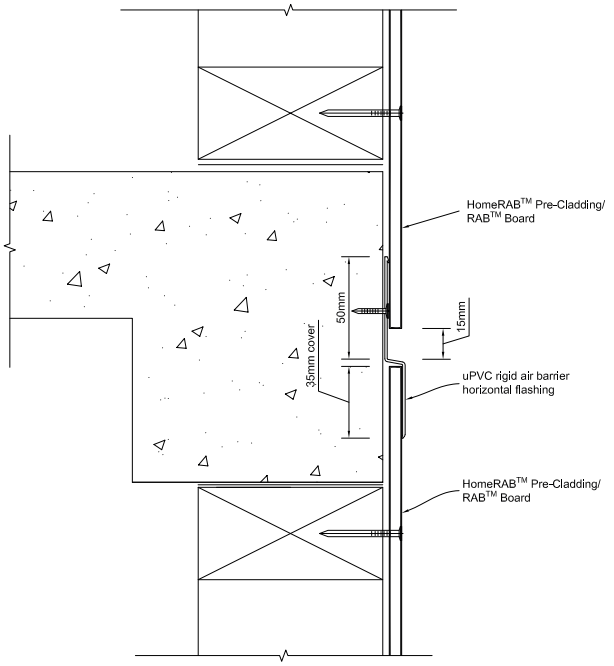

Figure 11: Internal corner joint

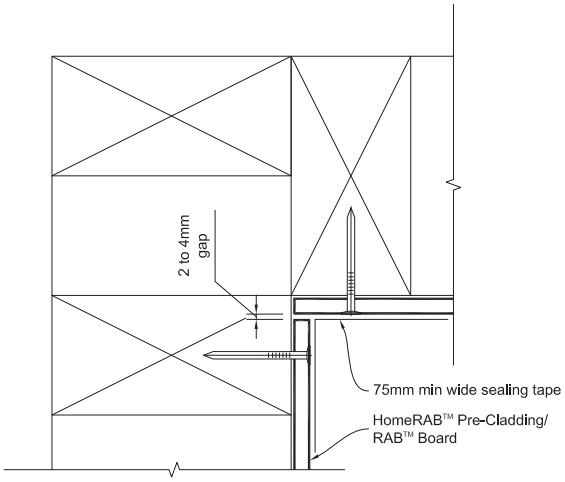

Figure 12: External corner joint

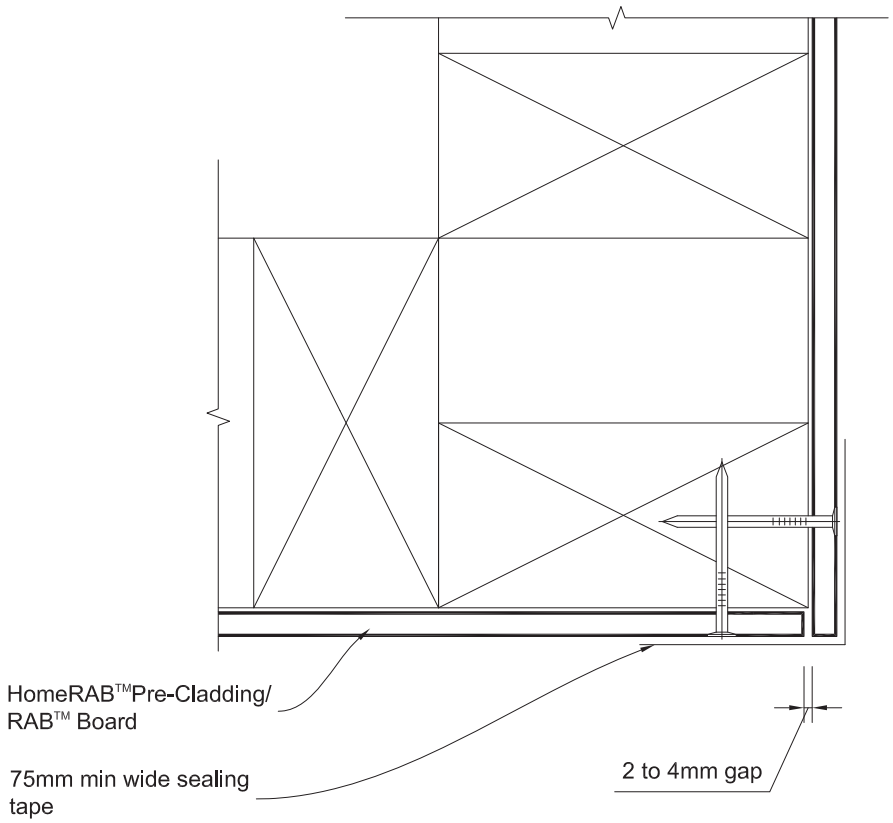

ABA20220988
APPROVED - Site Copy
Hastings District Council
20/09/2022

Figure 13a: Corner junction to horizontal joint

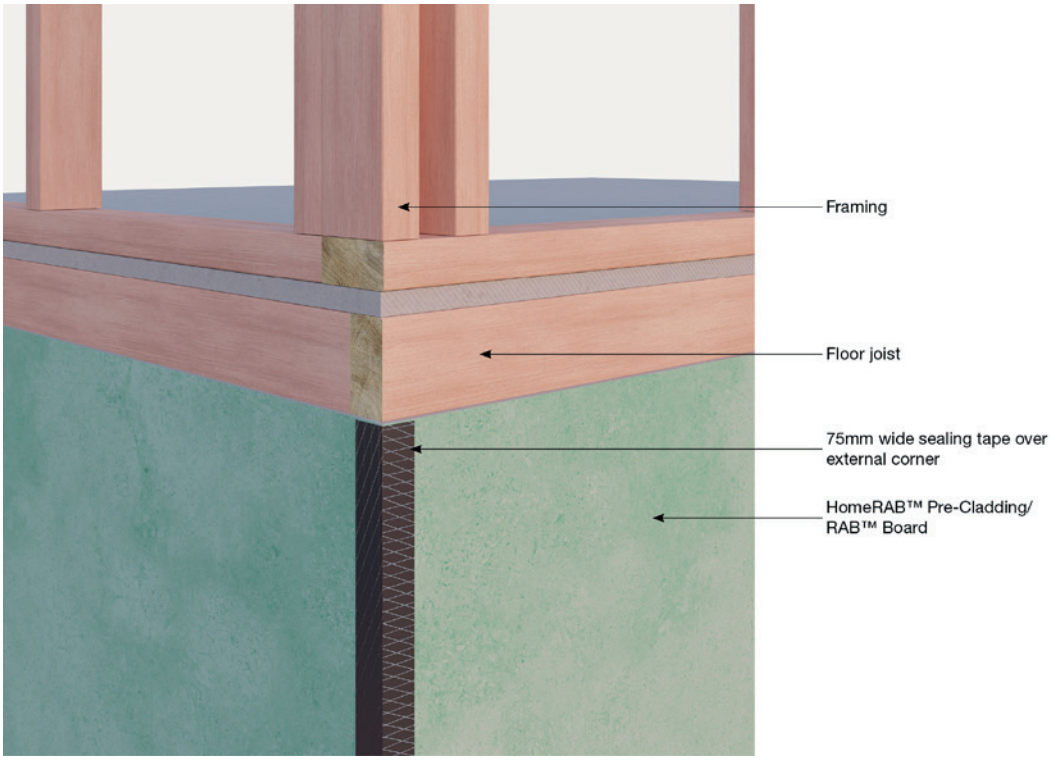

Figure 13b: Corner junction to horizontal joint

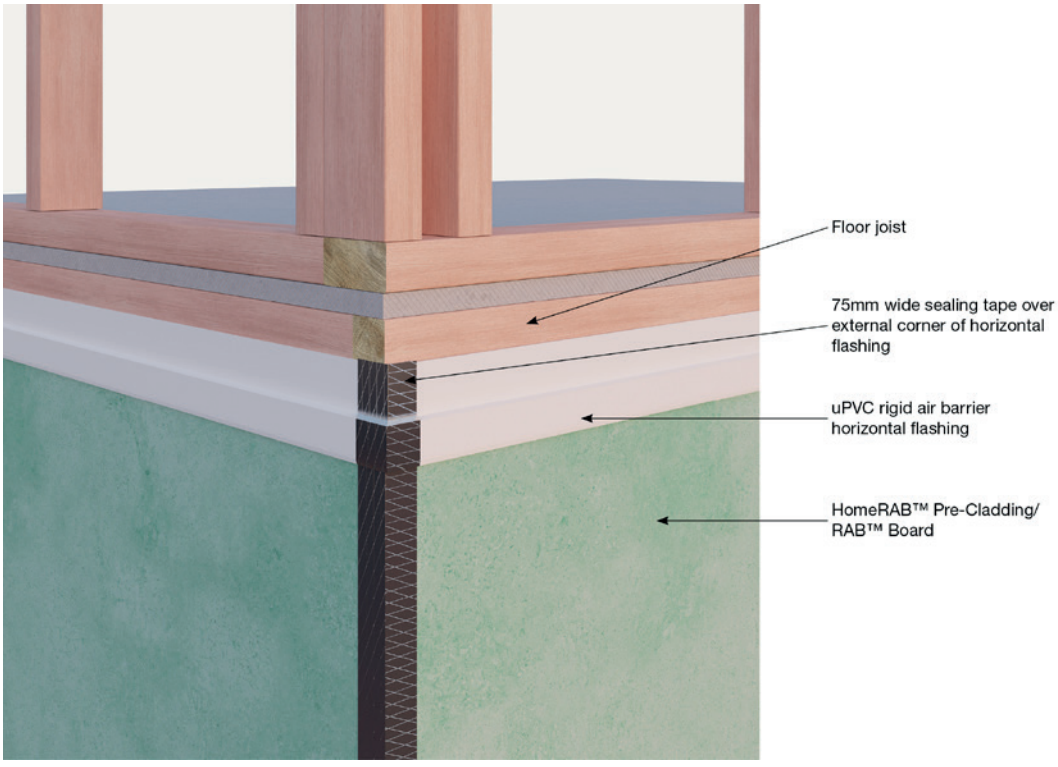

ABA20220988
APPROVED - Site Copy
Hastings District Council
20/09/2022

Figure 13c: Corner junction to horizontal joint

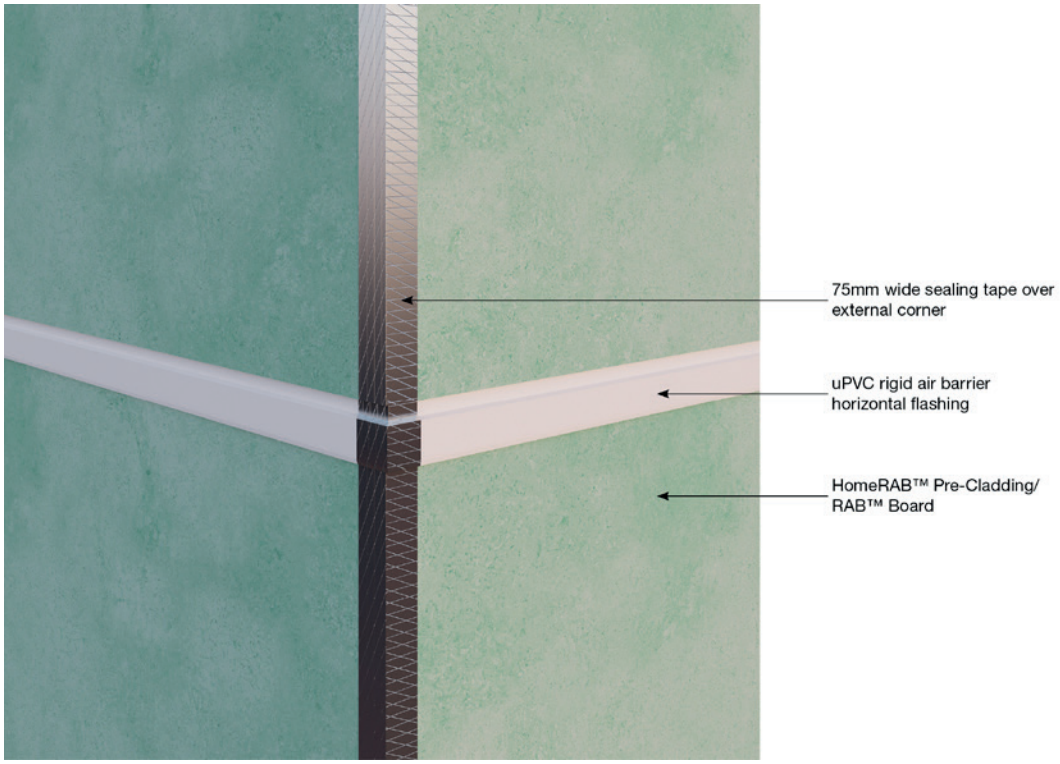

Figure 14: RAB Board used as backing board for stucco plaster/proprietary cladding systems

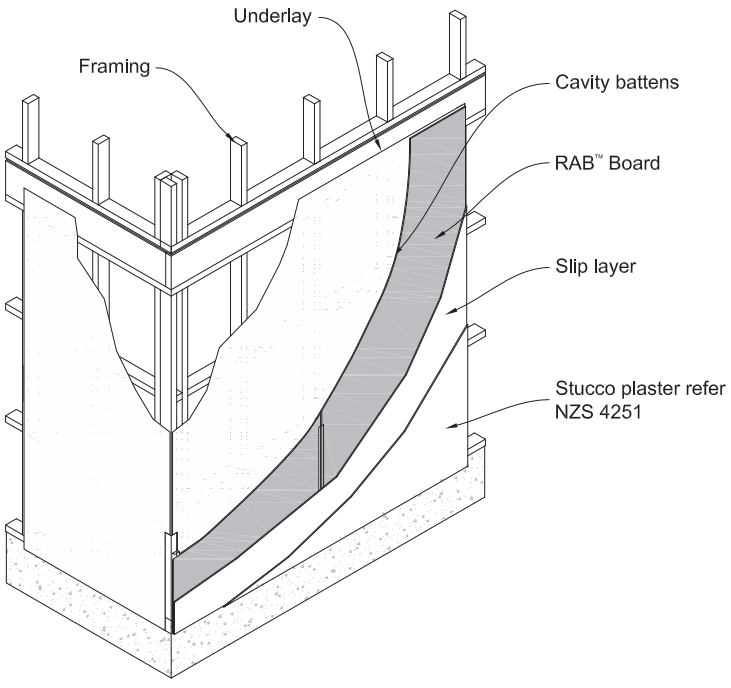

ABA20220988
APPROVED - Site Copy
Hastings District Council
20/09/2022

Figure 15: Sheet Fixing - General Application

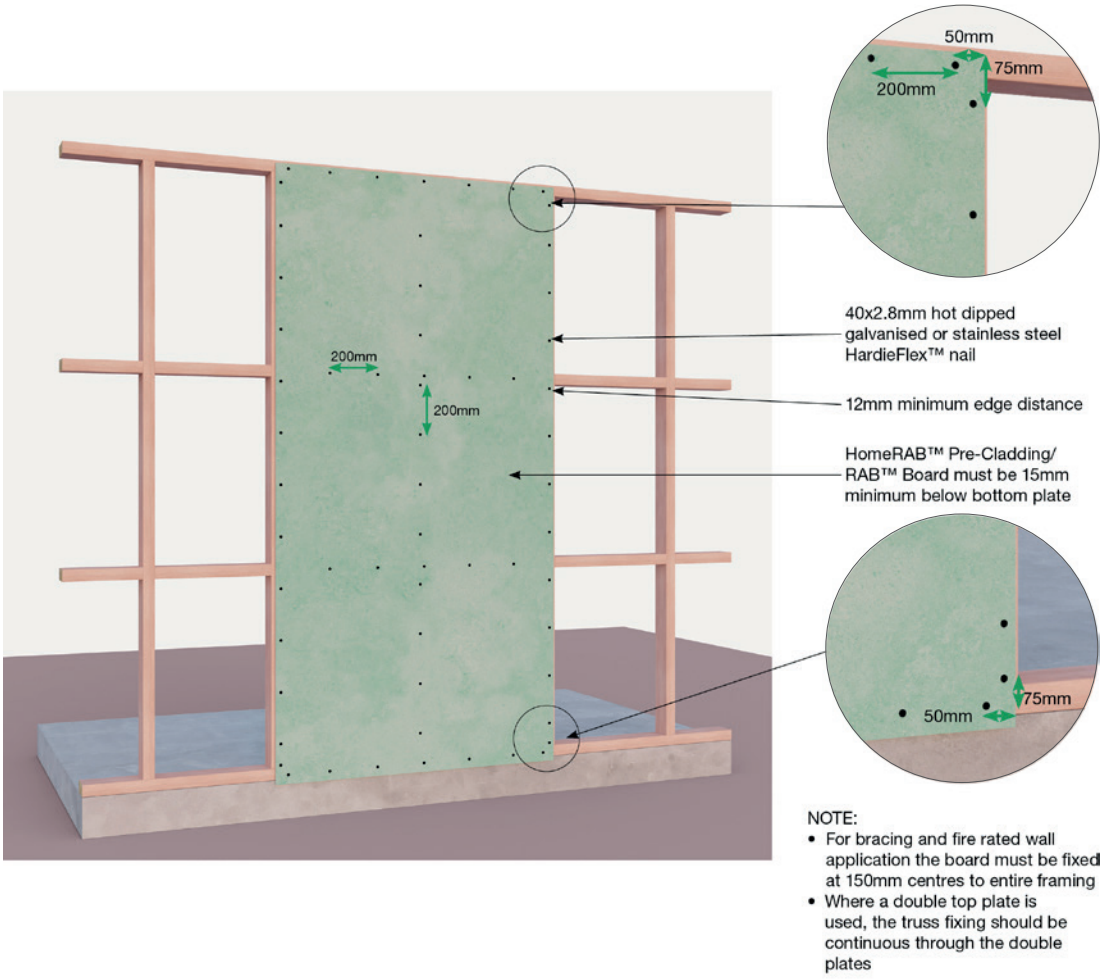

ABA20220988
APPROVED - Site Copy
Hastings District Council
20/09/2022

5.2 STUD TO TOP PLATE FIXING

Table 8.18 of NZS 3604 specifies two types of fixings i.e. Type-A with a fixing capacity of 0.7kN and Type-B with a fixing capacity 4.7kN. HomeRAB Pre-Cladding or RAB Board rigid air barriers have been tested and are verified as suitable alternatives to achieve the required stud top plate connectivity as mentioned above and no special use of straps/plates or wire dogs etc. is required.

For a 0.7kN connectivity, the standard fixing of HomeRAB Pre-Cladding and RAB Board using 40 x 2.8mm HardieFlex nails at 200mm centres maximum will achieve this.

For a 4.7kN connectivity, fix HomeRAB Pre-Cladding or RAB Board using 40 x 2.8mm HardieFlex nails or gun nail at 75mm centres maximum to top plate with a minimum edge distance of 20mm. Refer to Figure 16.

Figure 16: Stud to top plate connection

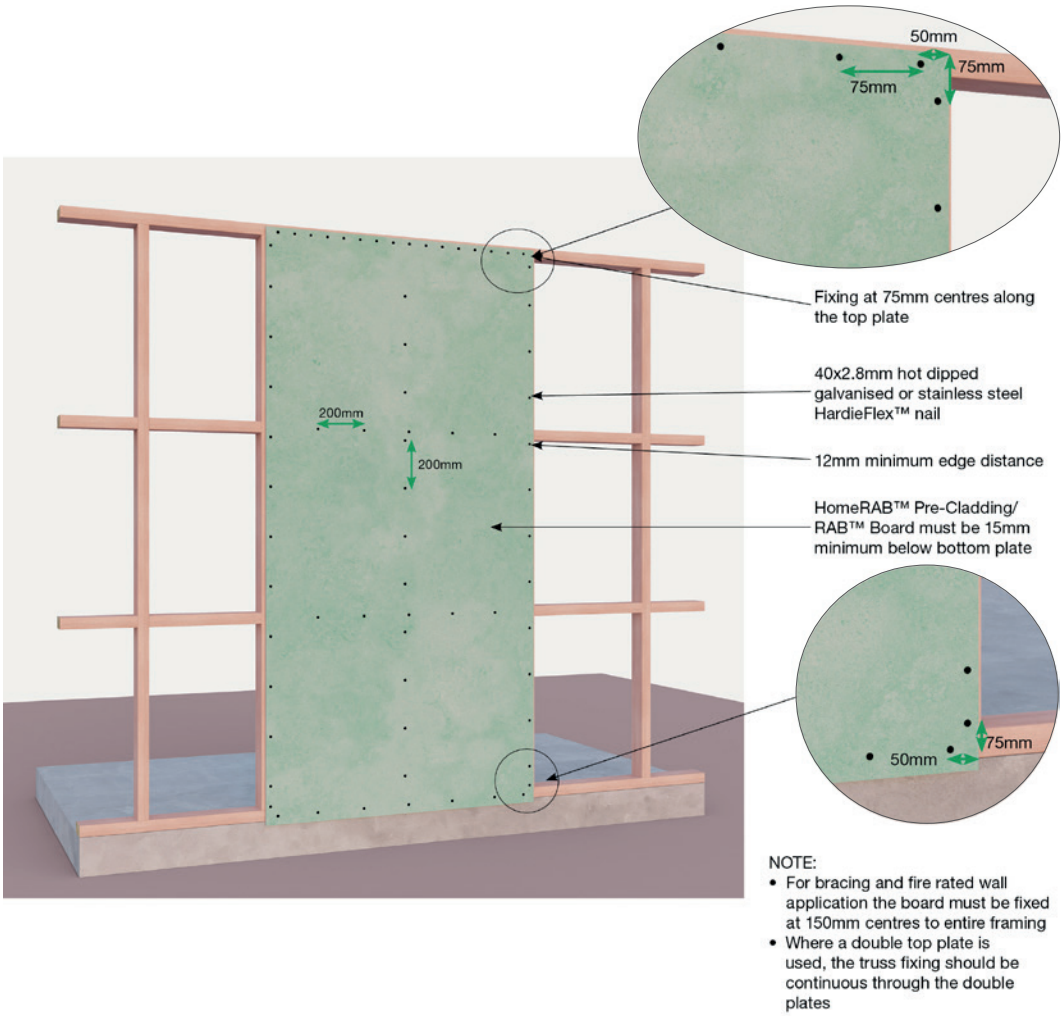

ABA20220988
APPROVED - Site Copy
Hastings District Council
20/09/2022

Figure 17: Stud to top plate connection - tall wall

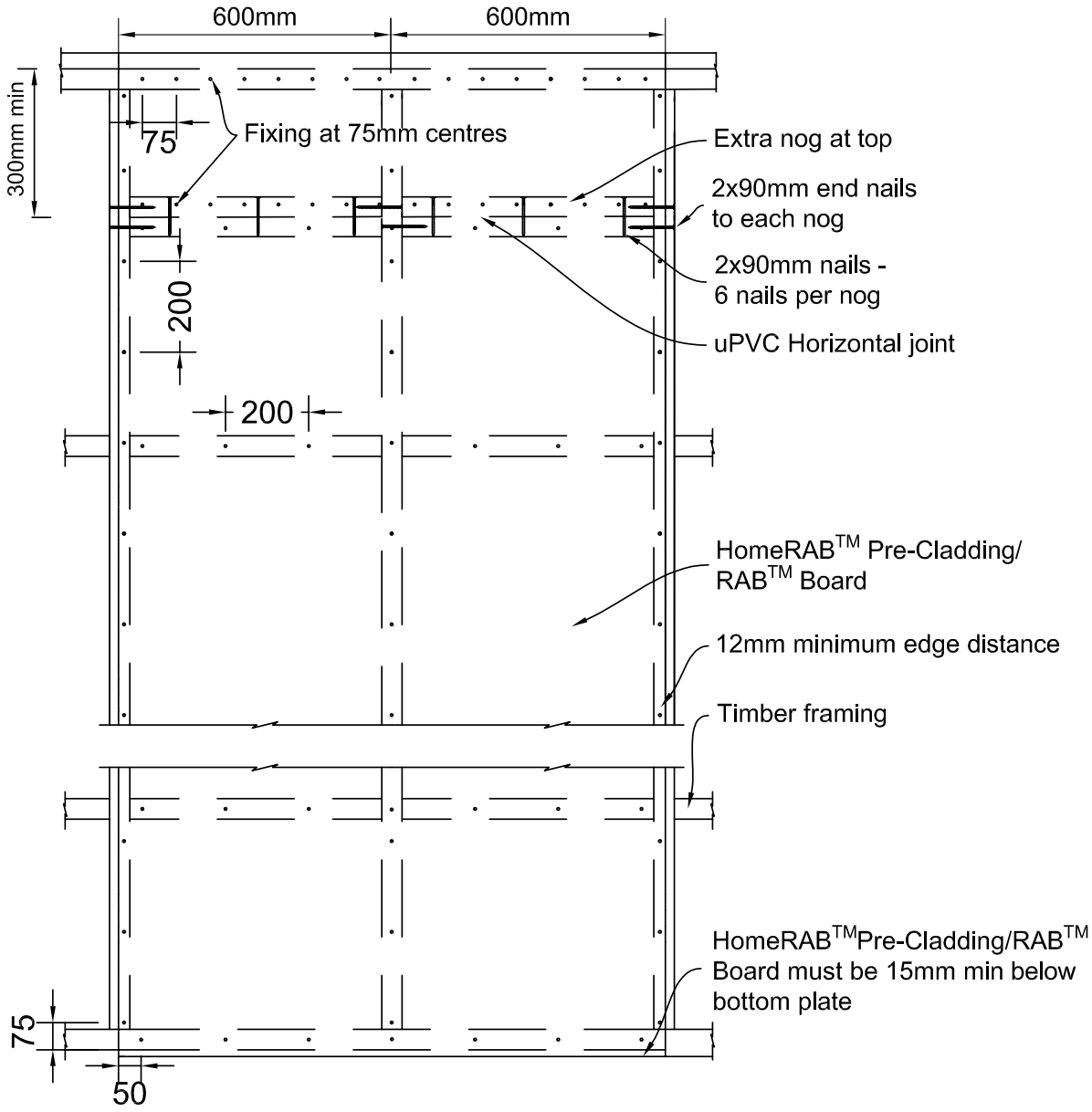

Note:

1. Where a double top plate is used, the truss fixing should be continuous through the double plates.
2. For bracing and fire rated wall application, the board must be fixed at 150mm c/c to entire framing.

ABA20220988
APPROVED - Site Copy
Hastings District Council
20/09/2022

Figure 18: Lintel connection

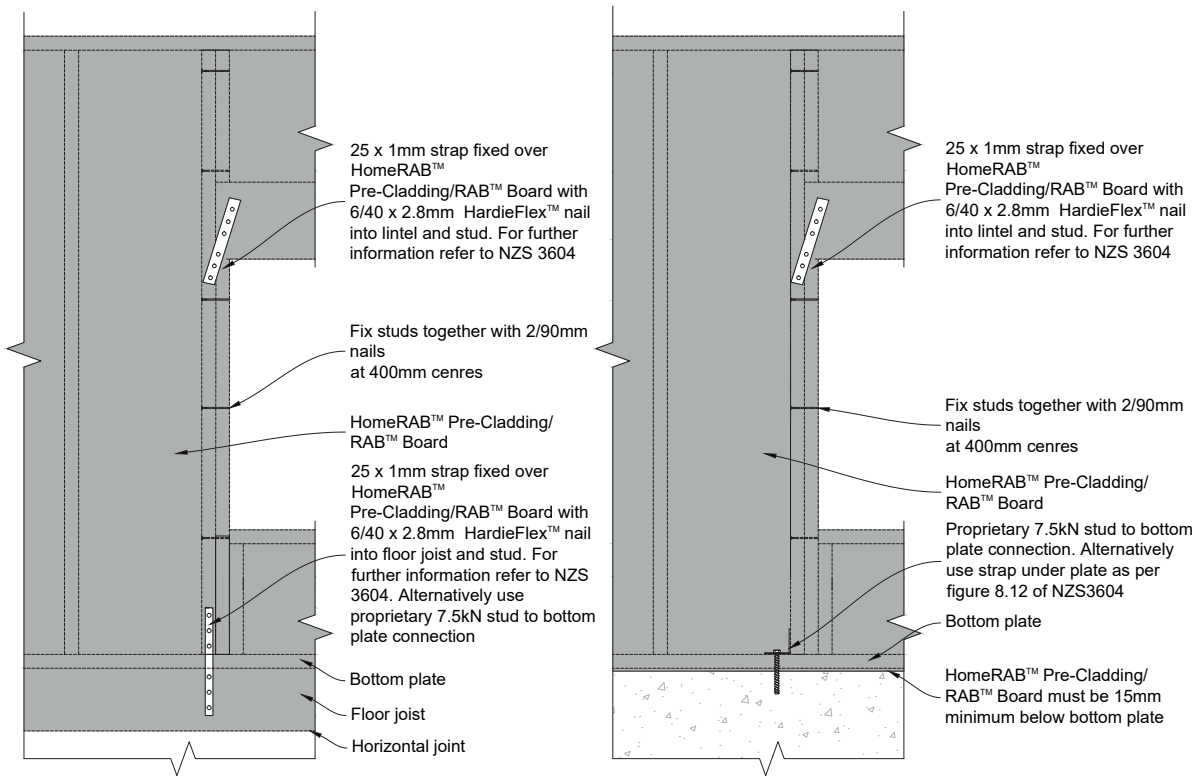

5.3 FLASHINGS

The exposed timber framing around the window jamb can be covered with a 150mm minimum wide flashing tape or a sealing tape refer to Figures 19 and 20. The window sill must be dressed with a 150mm minimum wide flashing tape. The tape is sealed over the face of the James Hardie rigid air barrier.

The James Hardie rigid air barrier surface must be clean, free of grime and dry before the tapes are applied. Some tape manufacturers require a primer tak spray be applied before fixing the tapes to the board surface to achieve a better tape adhesion. Check with the tape manufacturers for further information regarding minimum requirements etc.

ABA20220988
APPROVED - Site Copy
Hastings District Council
20/09/2022

Figure 19: Window sealing with flashing tapes

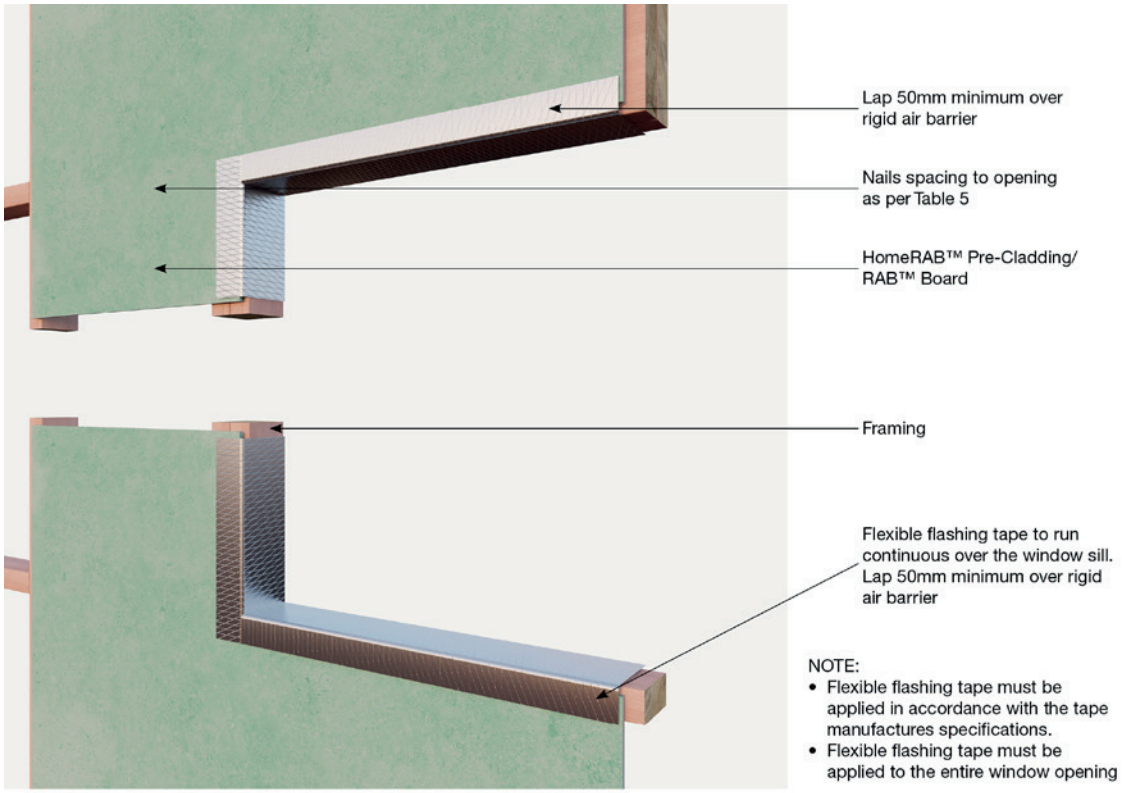

Figure 20: Window jamb with flashing tape

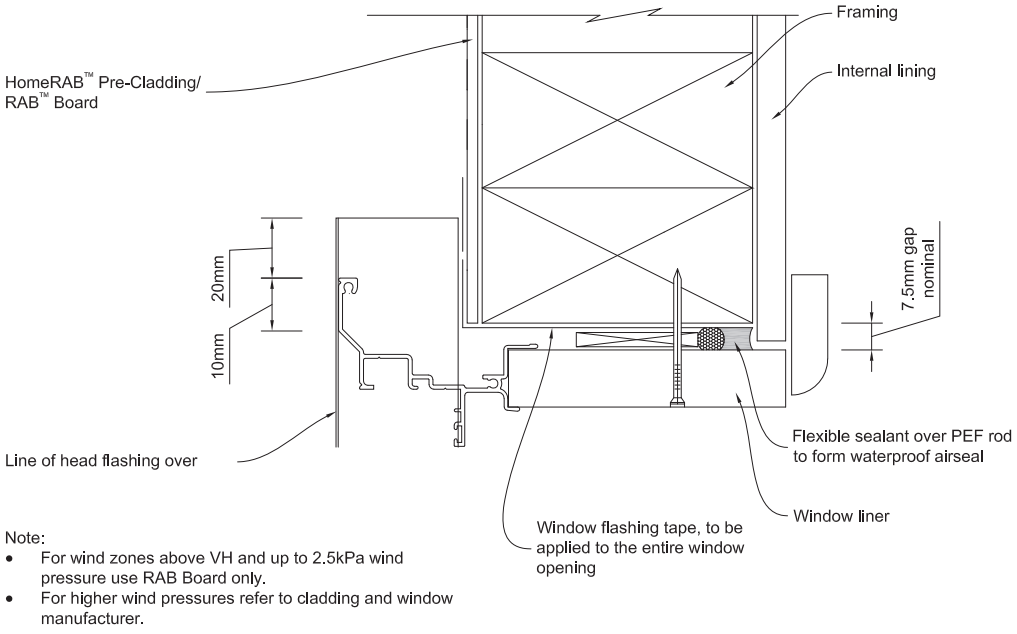

ABA20220988
APPROVED - Site Copy
Hastings District Council
20/09/2022

Figure 21: James Hardie rigid air barriers to standard soffit

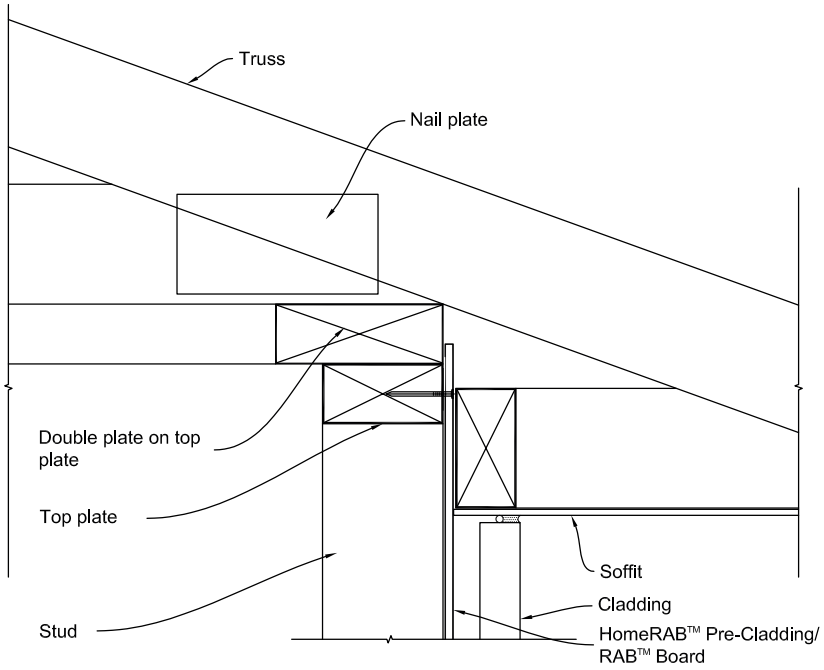

Figure 22: RAB Board to concrete slab junction

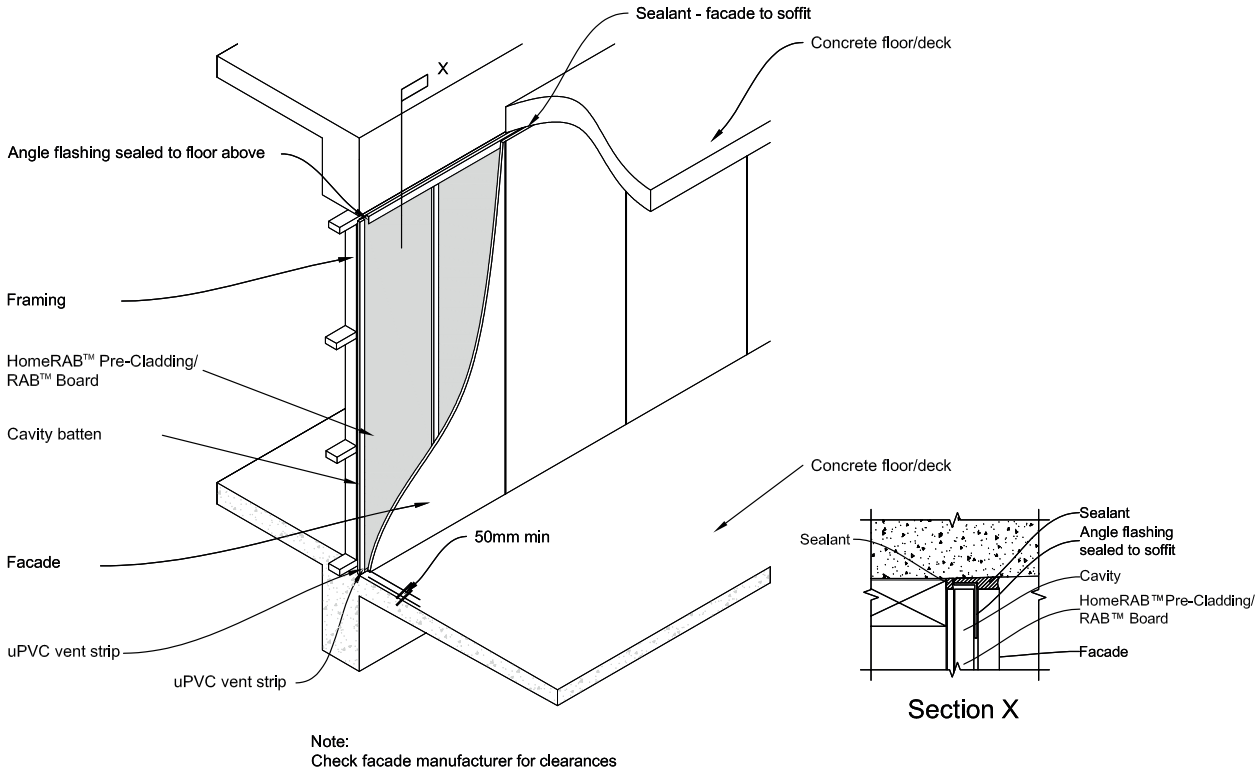

ABA20220988
APPROVED - Site Copy
Hastings District Council
20/09/2022

5.3.1 Penetrations

The pipe penetrations through James Hardie rigid air barrier must be sealed securely using a flexible flashing tape. Maintain a 100mm minimum cover of flashing over the board around the penetration.

5.3.2 Balustrade to wall junctions

The junctions between balustrades to wall should be appropriately flashed. Refer to E2/AS1 of the NZBC for information and flashing details.

Figure 23: Pipe penetration through James Hardie rigid air barriers

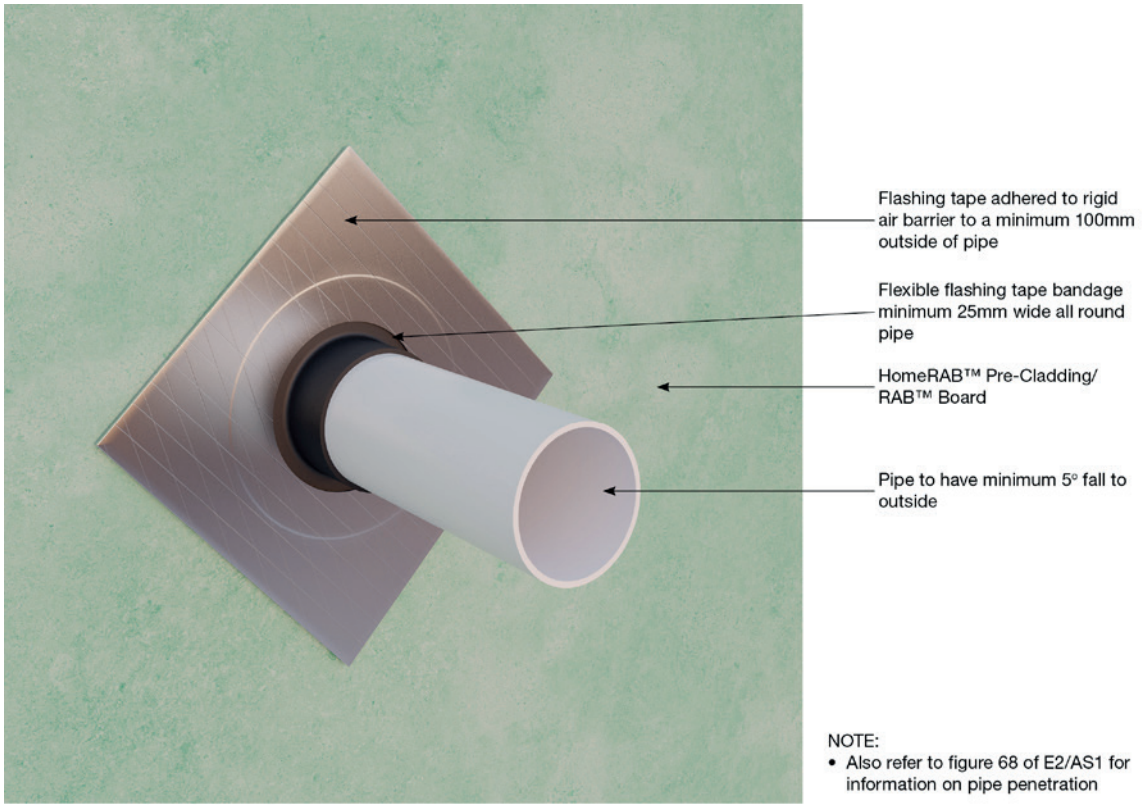

ABA20220988
APPROVED - Site Copy
Hastings District Council
20/09/2022

Figure 24: Flashing at balustrade

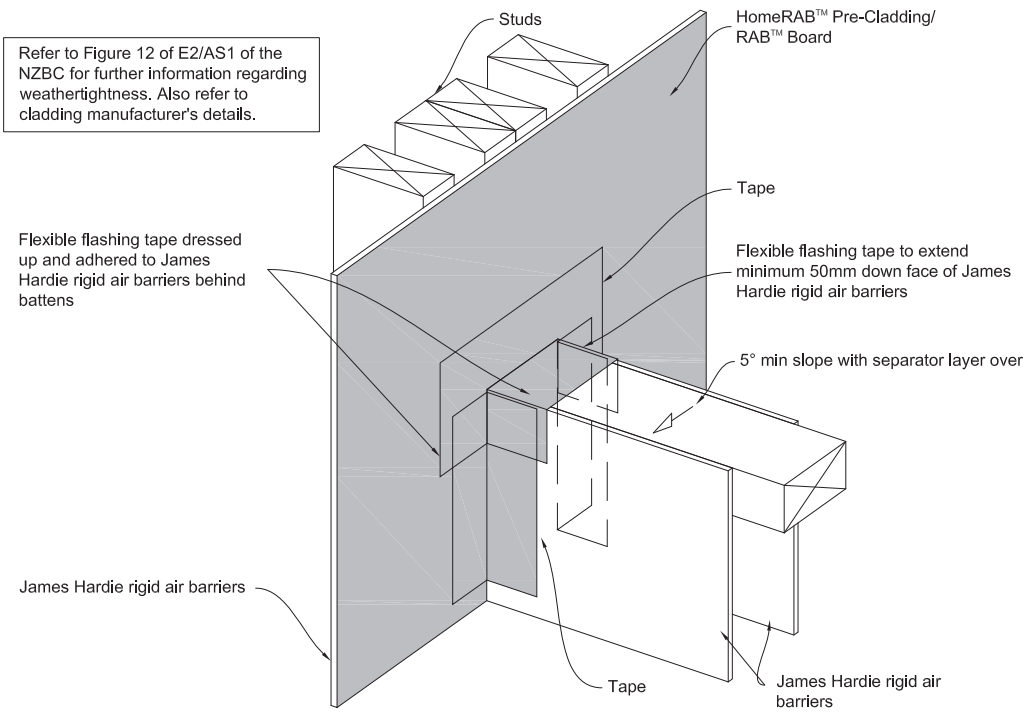

Figure 25: Apron flashing

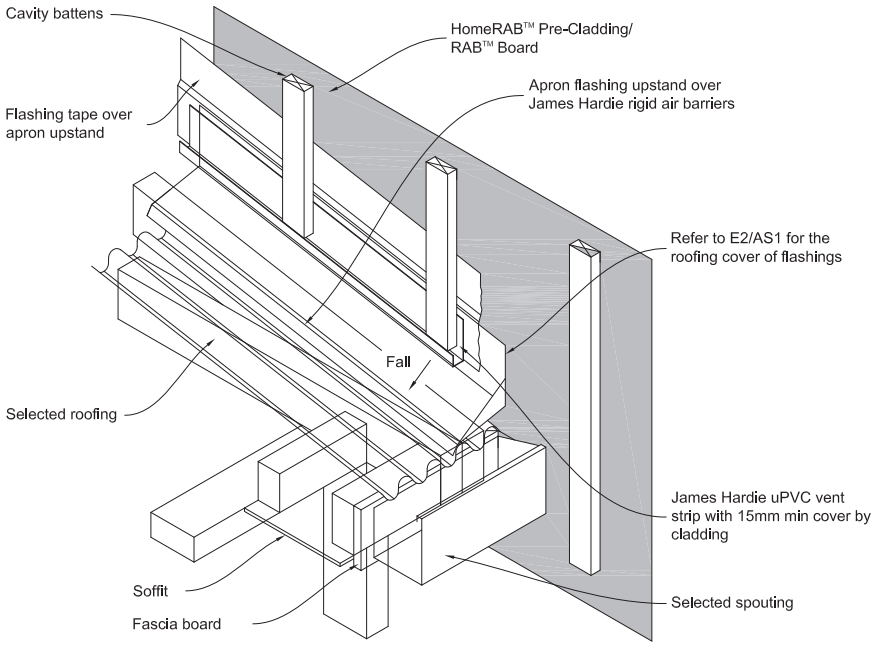

ABA20220988
APPROVED - Site Copy
Hastings District Council
20/09/2022

5.3.3 Inter-storey deflections

When installing James Hardie rigid air barriers, a horizontal joint in the RAB Board must be incorporated between sheets at each floor level to accommodate for the inter-storey deflections. Refer to Figures 9 and 10.

For the specific engineering design (SED), where structures are subject to high wind pressures and designed with inter-storey seismic deflections, the use of 6mm or 9mm RAB Board is recommended. RAB Board, when fixed as per this installation manual, is readily capable of withstanding Serviceability Limit State (SLS) deflections up to span/180. For structures where greater inter-storey seismic deflections are expected, a deflection head should be used, as per the project structural engineer's design and detailing. Refer to Figure 26.

Figure 26: Deflection head

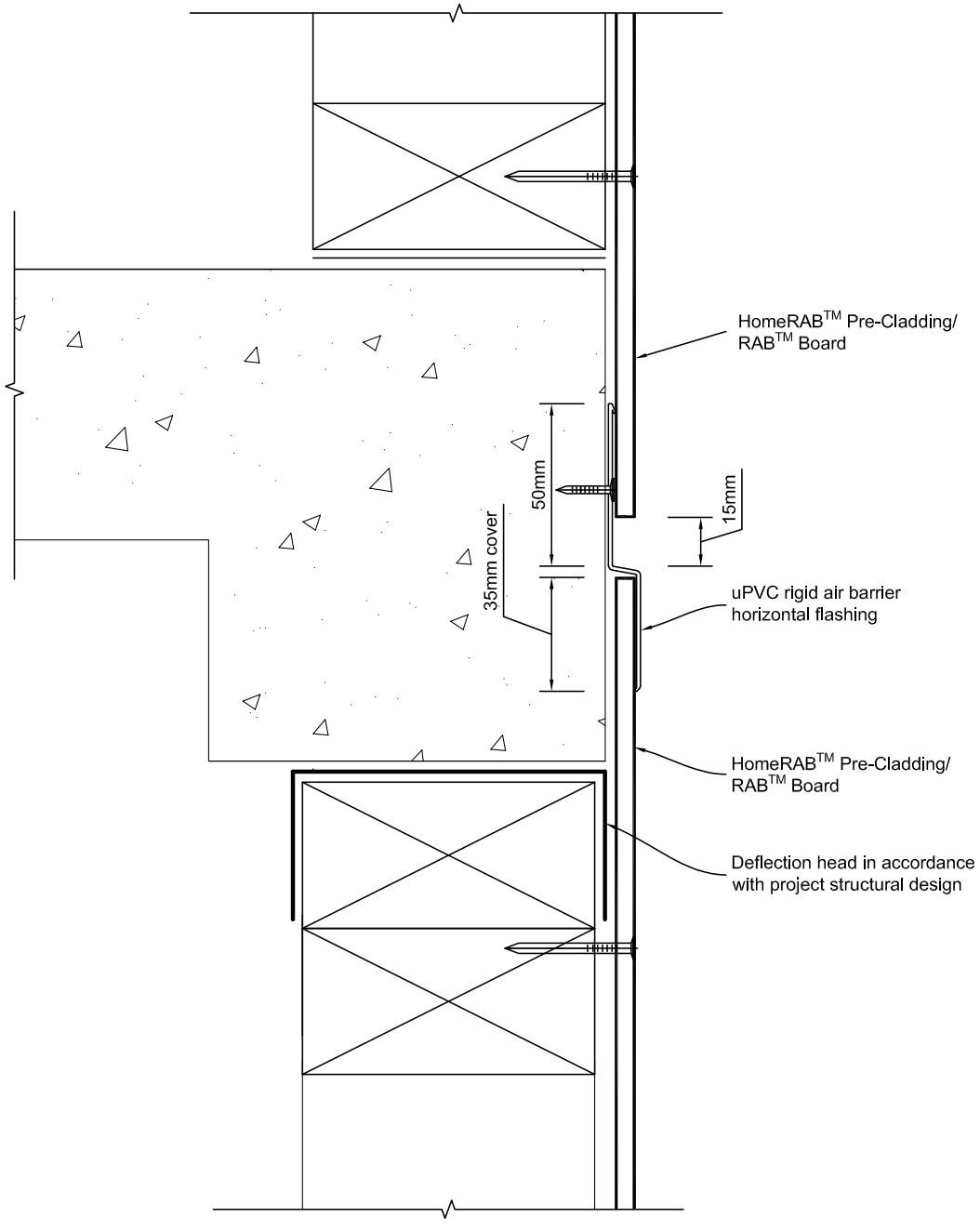

ABA20220988
APPROVED - Site Copy
Hastings District Council
20/09/2022

6 Bracing

James Hardie rigid air barriers are suitable for bracing applications. Given below are various bracing systems that have been tested and the bracing values published. Refer to bracing system details for bracing installation or refer to James Hardie Bracing Design Manual for further information.

6.1 BOTTOM PLATE FIXING/ HOLD DOWN RESTRAINTS

The timber framing must be fixed in accordance to table 8.19 of NZS 3604. Additional hold down restraints must be provided as per each bracing system's requirements. Refer to bracing systems details.

6.7.1 Concrete foundation

Pydra brace anchor kits or GIB Handibrac® with a 15kN minimum uplift capacity holding down bolt can be used as end restraints.

6.7.2 Timber foundation

Pydra brace anchor kits or GIB Handibrac® with a M12 x 150mm holding down bolt can be used as end restraints. Alternatively, holding down straps as per NZS 3604 can also be used.

6.2 FASTENER DURABILITY AND SIZE

Coach screws and holding down (HD) bolts, where used, must be M12 hot-dipped galvanised steel fitted with 50 x 50 x 3mm galvanised washers. The holding down bolts and washers must have a protective coating as per Table 4.2 of NZS 3604.

PRE-CLADDINGS:
All nails for fixing the pre-cladding bracing panels in Zone D must be Grade 304/316 stainless steel in accordance with NZS 3604.

All nails for fixing the pre-cladding bracing panels for Zone B and Zone C can be Grade 304/316 stainless steel or hot dipped galvanised steel nail.

Note: Fastener sizes are given in the respective details section for each product or system.

6.3 SHEET NAILING

Nails can be hand driven or gun nailed at a minimum edge distance as shown in the bracing details within this specification. This also applies to dimensions from corners, vertically and horizontally. The sheets must be held hard against the framing during nailing to minimise sheet break-out at the back of sheet. Always drive all nails flush with the sheet surface. For sheet/panel systems do not punch the nail below the surface as it reduces the nail's holding power.

Fix all sheets from the centre working towards outer edges to avoid drumminess. Fixings at 150mm maximum centres when hand nailing.

Gun nails can be used on some bracing systems with fixings at 100mm maximum centres. Must use a 6.85mm Ø round head coil nail with a pneumatic nail gun. **Refer to bracing tables for hand or gun nail options available.**

6.4 SHEET ORIENTATION

For the bracing systems specified in this manual, all flat sheets must be fixed vertically with the exception of Villaboard™ Lining, which can either be fixed vertically or horizontally as per the bracing systems details.

Full-height sheets must be used for walls up to 3000mm in height. When bracing walls height exceed 3000mm, sheet jointing is acceptable. Only one horizontal sheet joint is permitted within the element height. The maximum height of bracing wall is limited to 4800mm.

A site cut bracing sheet must be minimum 300mm wide when used in a bracing element. Refer to Figure 16.

Always ensure that the sheet joint is on the centre line of the stud or nog to achieve sufficient cover of fixings.

In internal walls the lining sheet used for bracing must stop 6mm above the finished floor.

6.5 SERVICE PENETRATIONS

Holes/penetrations up to 100 x 100mm positioned no closer than 200mm of the edge or another penetration, are allowed for services. Maximum of two service penetrations are recommended per sheet.

No window/door penetrations are allowed within the bracing elements.

ABA20220988
APPROVED - Site Copy
Hastings District Council
20/09/2022

Table 7

HomeRAB™ Pre-Cladding vertically fixed

System number	Length	Hold down	Refer figures	BU/M		kN/m		Fixing method	
				Wind	Earthquake	Wind	Earthquake	Hand nail	Gun nail
Hpn	1200	N	27	67	71	3.4	3.6	√	
HP	400	Y	28,32,33,34	85	91	4.3	4.6	√	E
	600	Y	28,32,33,34	99	103	5.0	5.2	√	E
	1200 to 2400	Y	29,32,33,34	133*	104	6.7	5.2	√	E
	2400 to 4800	Y	29,32,33,34	141*	67	7.1	3.4	√	E

*A limit of 120BUs/m maximum applies to timber floors and 150BUs/m maximum to concrete floors built as per NZS 3604: 2011 unless a specific engineering design is carried out to ensure the uplift force generated by bracing elements does not exceed the maximum limit for each floor type.

Table 8

HomeRAB™ Pre-Cladding vertically fixed with 10mm GIB® Standard plasterboard

System number	Length	Hold down	Refer figures	BU/M		kN/m		Fixing method	
				Wind	Earthquake	Wind	Earthquake	Hand nail	Gun nail
HPg	400	Y	28,30,32,33,34	90	98	4.5	4.9	√	E
	600	Y	28,30,32,33,34	127*	136*	6.4	6.8	√	E
	1200 to 2400	Y	29,31,32,33,34	164*	138*	8.2	6.9	√	E

*A limit of 120BUs/m maximum applies to timber floors and 150BUs/m maximum to concrete floors built as per NZS 3604: 2011 unless a specific engineering design is carried out to ensure the uplift force generated by bracing elements does not exceed the maximum limit for each floor type.

Table 9

RAB™ Board 6mm or 9mm

System number	Length	Hold down	Refer figures	BU/M		kN/m		Fixing method	
				Wind	Earthquake	Wind	Earthquake	Hand nail	Gun nail
JHDn	1200	N	27	118	102	5.9	5.1	√	
JHD	400	Y	28,32,33,34	83	107	4.2	5.4	√	E & P
	600	Y	28,32,33,34	99	107	5.0	5.4	√	E & P
	1200 to 2400	Y	29,32,33,34	154*	140*	7.7	7.0	√	E & P
	2400 to 4800	Y	29,32,33,34	133*	150*	6.7	7.5	√	E & P

*A limit of 120BUs/m maximum applies to timber floors and 150BUs/m maximum to concrete floors built as per NZS 3604: 2011 unless a specific engineering design is carried out to ensure the uplift force generated by bracing elements does not exceed the maximum limit for each floor type.

E = Ecko Pneumatic wireless coil nail
P = Paslode RounDrive ring shank nail

ABA20220988
APPROVED - Site Copy
Hastings District Council
20/09/2022

Figure 27: 1200mm HomeRAB™ Pre-Cladding or RAB™ Board to concrete or timber floor - no hold down brackets

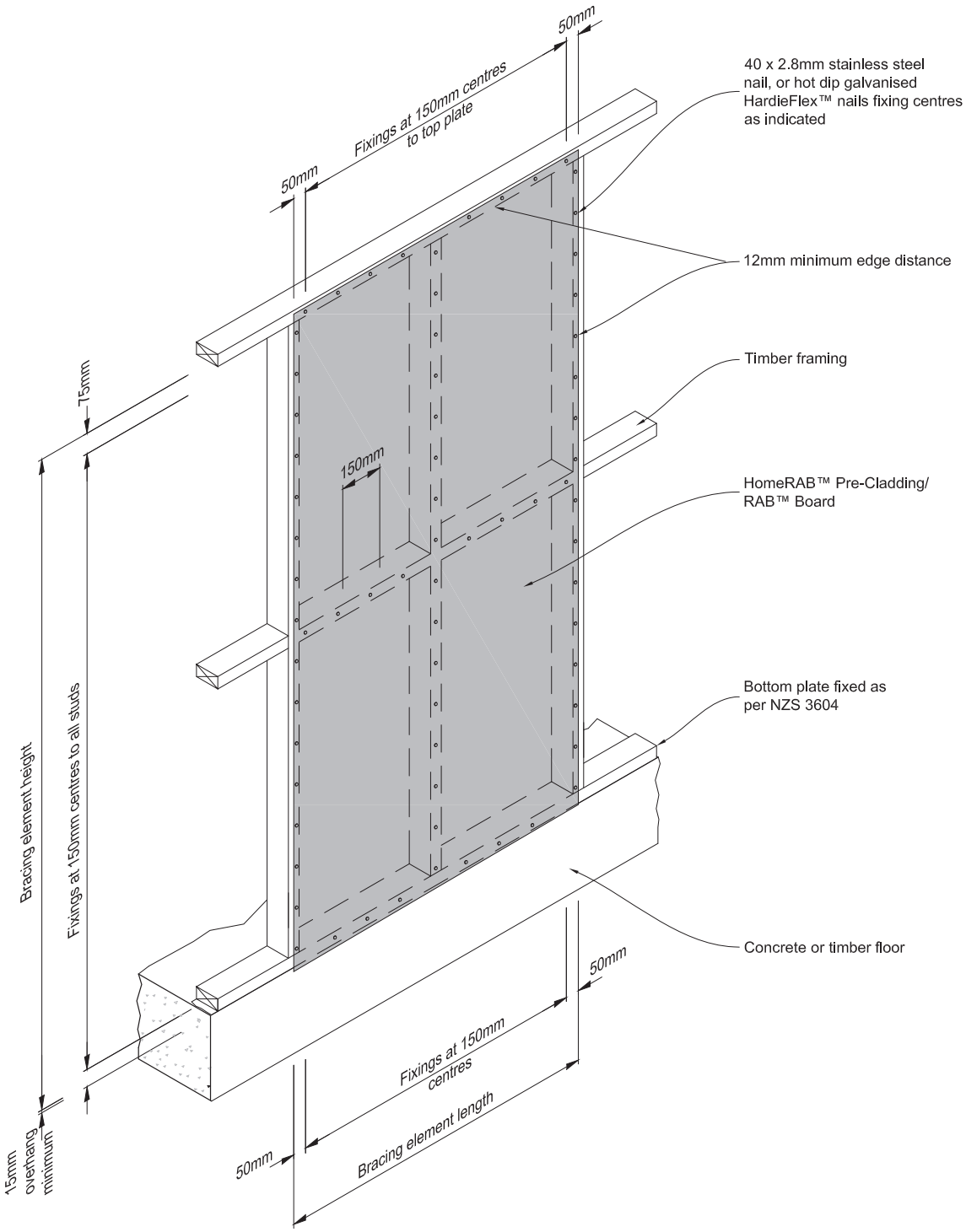

Product	System	Minimum length
HomeRAB™ Pre-Cladding	HPn	1200mm
RAB™ Board	JHDn	1200mm

ABA20220988
APPROVED - Site Copy
Hastings District Council
20/09/2022

Figure 28: 400/600mm HomeRAB™ Pre-Cladding or RAB™ Board to concrete or timber floor

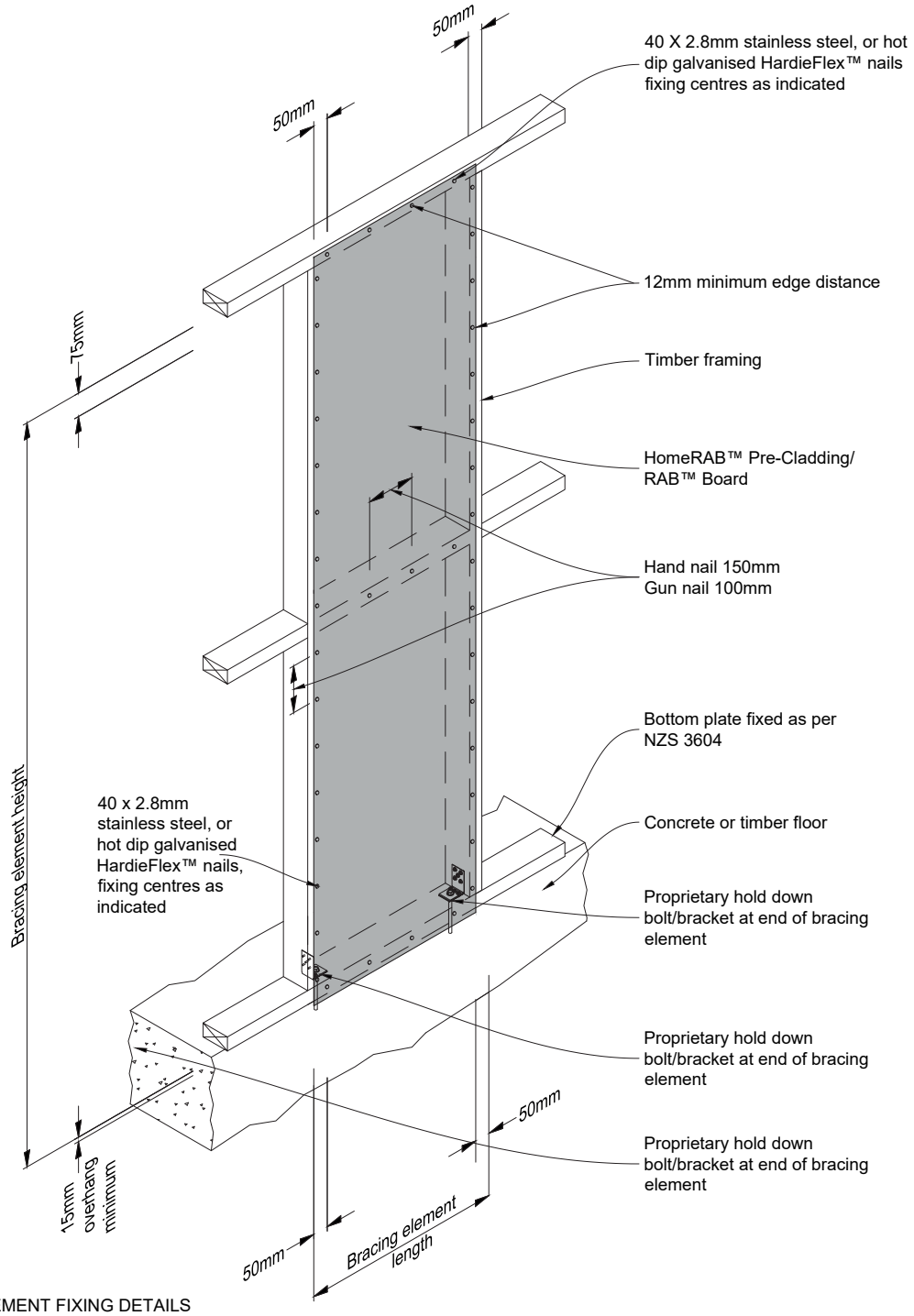

FIBRE CEMENT FIXING DETAILS

Notes for Figure 28:

- **Concrete floor** bottom plate fixing:- Ramset bracing anchor kit Concrete or GIB Handibrac® with 15kN anchor at each end of bracing element
- **Timber floor** bottom plate fixing:- Ramset bracing anchor kit Wood or GIB Handibrac® with a 12x150mm galvanised coach screw at each end of bracing element

Product	System	Minimum length
HomeRAB™ Pre-Cladding	HP	400 or 600mm
HomeRAB™ Pre-Cladding with 10mm GIB® Standard plasterboard	HPg	400 or 600mm
RAB™ Board	JHD	400 or 600mm

ABA20220988
APPROVED - Site Copy
Hastings District Council
20/09/2022

Figure 29: 1200mm HomeRAB™ Pre-Cladding or RAB™ Board to concrete or timber floor

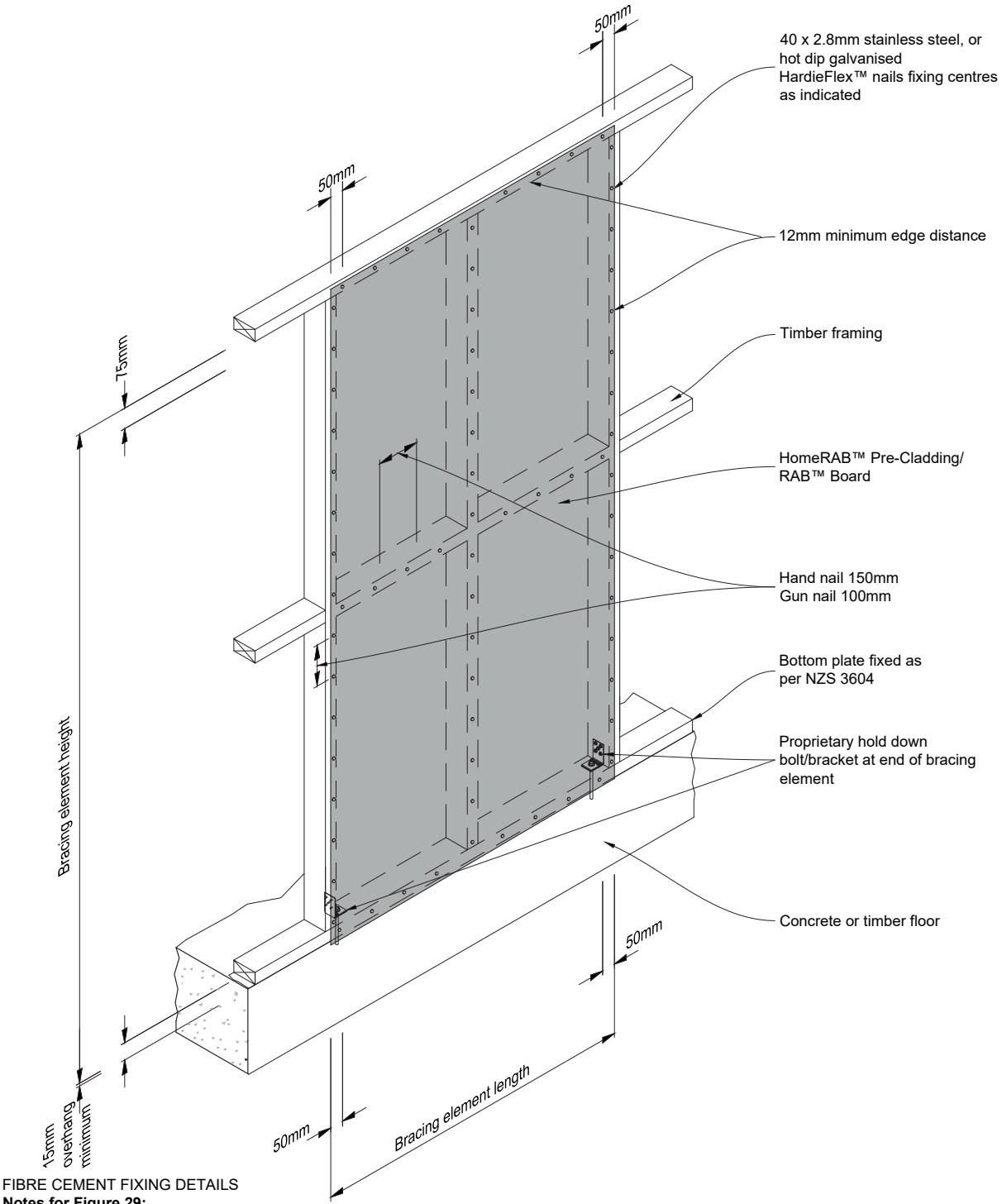

FIBRE CEMENT FIXING DETAILS

Notes for Figure 29:

- **Concrete floor** bottom plate fixing:- Ramset bracing anchor kit Concrete or GIB Handibrac® with 15kN anchor at each end of bracing element
- **Timber floor** bottom plate fixing:- Ramset bracing anchor kit Wood or GIB Handibrac® with a 12x150mm galvanised coach screw at each end of bracing element

Product	System	Minimum length
HomeRAB™ Pre-Cladding	HP	1200mm
HomeRAB™ Pre-Cladding with 10mm GIB® Standard plasterboard	HPg	1200mm
RAB™ Board	JHD	1200mm

ABA20220988
APPROVED - Site Copy
Hastings District Council
20/09/2022

Figure 30: 400mm/600mm HomeRAB™ Pre-Cladding with 10mm GIB® Standard Plasterboard

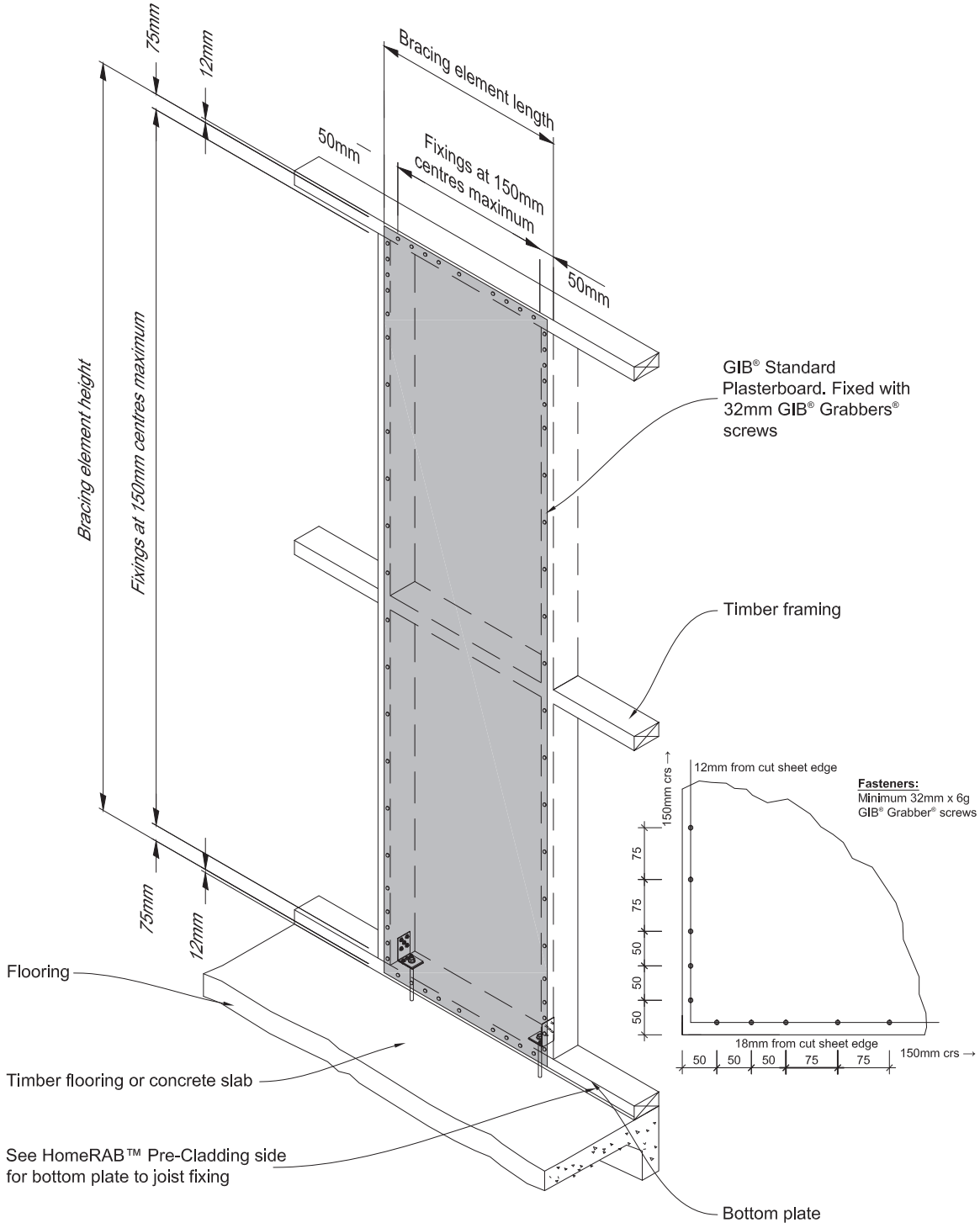

STANDARD GIB® FIXING DETAILS

Notes for Figure 30:

- All GIB® standard sheets to be fixed to Winstone Wallboards Ltd specifications. GIB® Bracing Systems.
- All GIB® bracing sheets to be stopped to Winstone Wallboards Ltd specifications. GIB® Site Guide.
- Refer Winstone Wallboards Ltd specifications for edge distance.

Product	System	Minimum length
HomeRAB™ Pre-Cladding	HPg	400 or 600mm

ABA20220988
APPROVED - Site Copy
Hastings District Council
20/09/2022

Figure 31: 1200mm HomeRAB™ Pre-Cladding with 10mm GIB® Standard Plasterboard

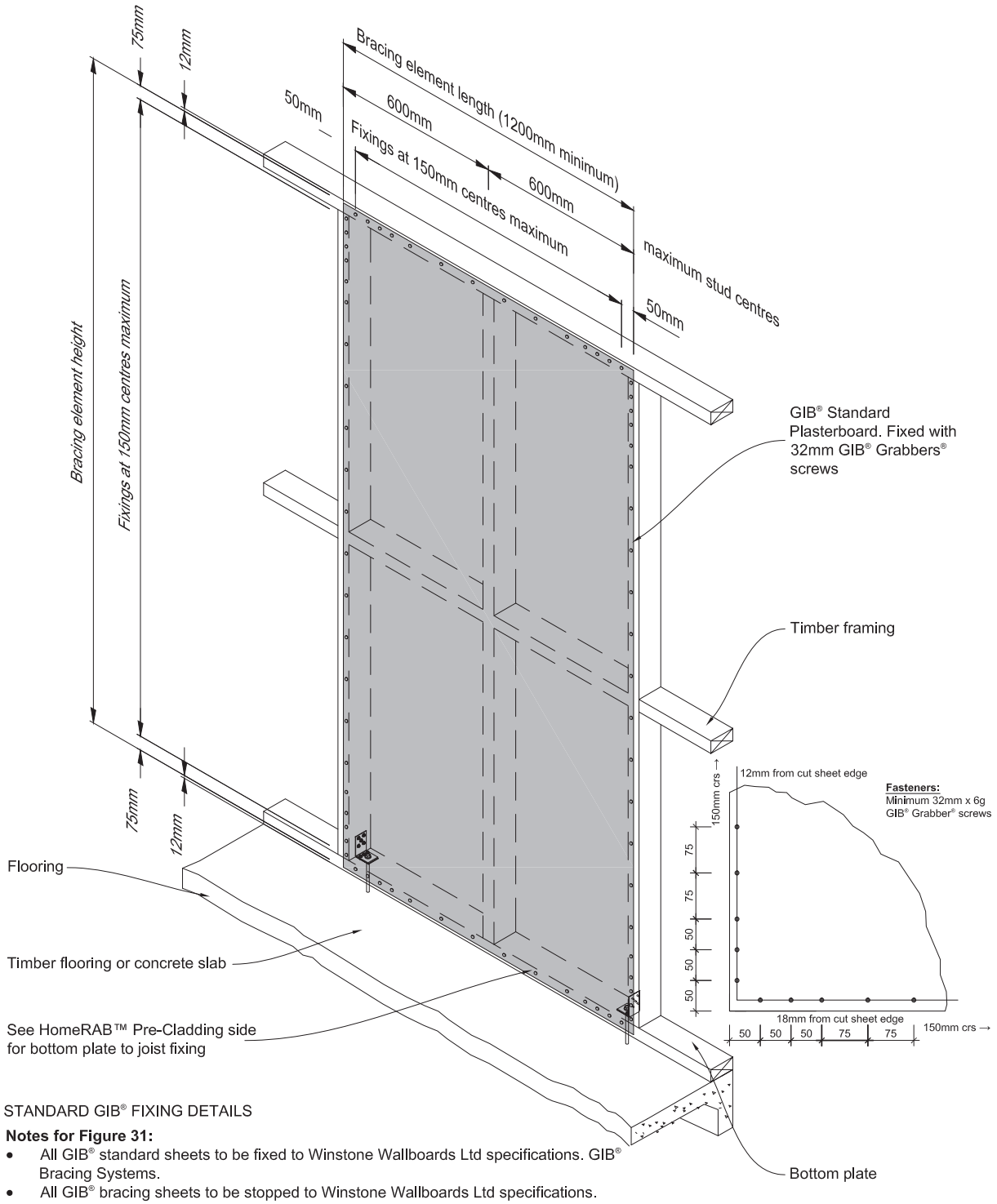

STANDARD GIB® FIXING DETAILS

Notes for Figure 31:

- All GIB® standard sheets to be fixed to Winstone Wallboards Ltd specifications. GIB® Bracing Systems.
- All GIB® bracing sheets to be stopped to Winstone Wallboards Ltd specifications. GIB® Site Guide.
- Refer Winstone Wallboards Ltd specifications for edge distance.

Product	System	Minimum length
HomeRAB™ Pre-Cladding/GIB® Standard Plasterboard	HPg	1200mm

ABA20220988
APPROVED - Site Copy
Hastings District Council
20/09/2022

Bracing Construction Figures

Figure 32: End bracket to concrete slab

Notes for Figure 32:

- **Concrete floor** bottom plate fixing:- Ramset bracing anchor kit Concrete or GIB Handibrac® with 15kN anchor at each end of bracing element

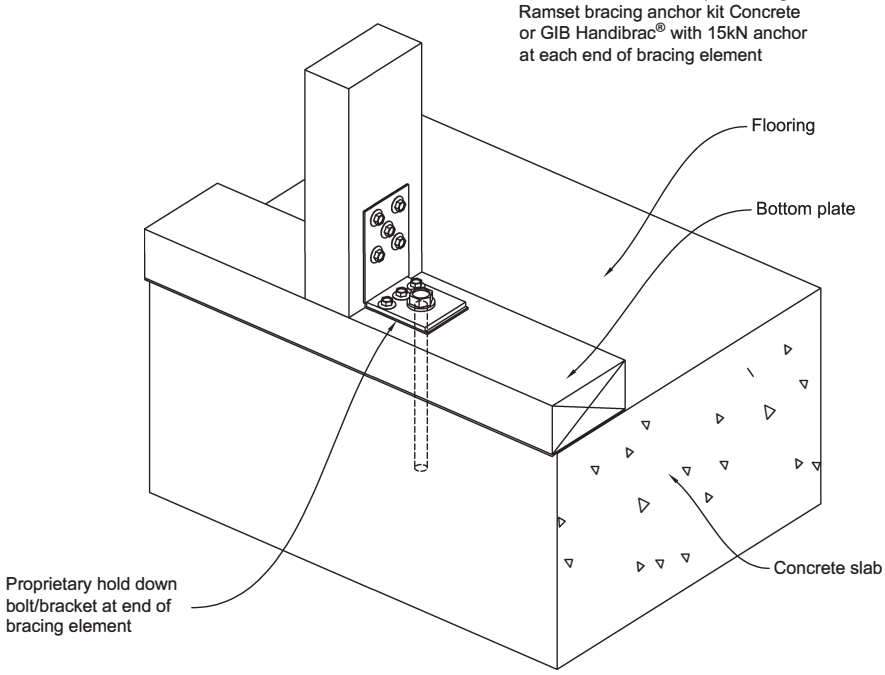

Figure 33: End bracket to timber joist

Notes for Figure 33:

- **Timber floor** bottom plate fixing:- Ramset bracing anchor kit Wood or GIB Handibrac® with a 12x150mm galvanised coach screw at each end of bracing element

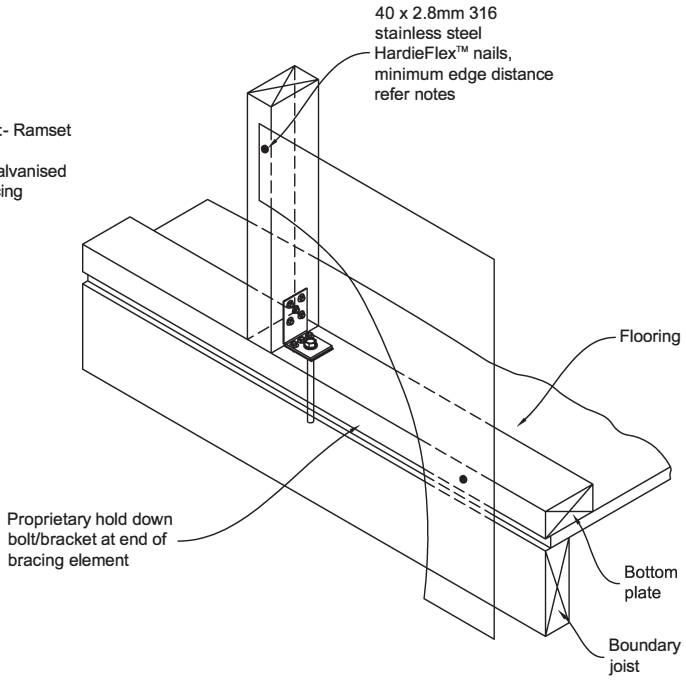

ABA20220988
APPROVED - Site Copy
Hastings District Council
20/09/2022

Figure 34: Hold down straps to timber joists

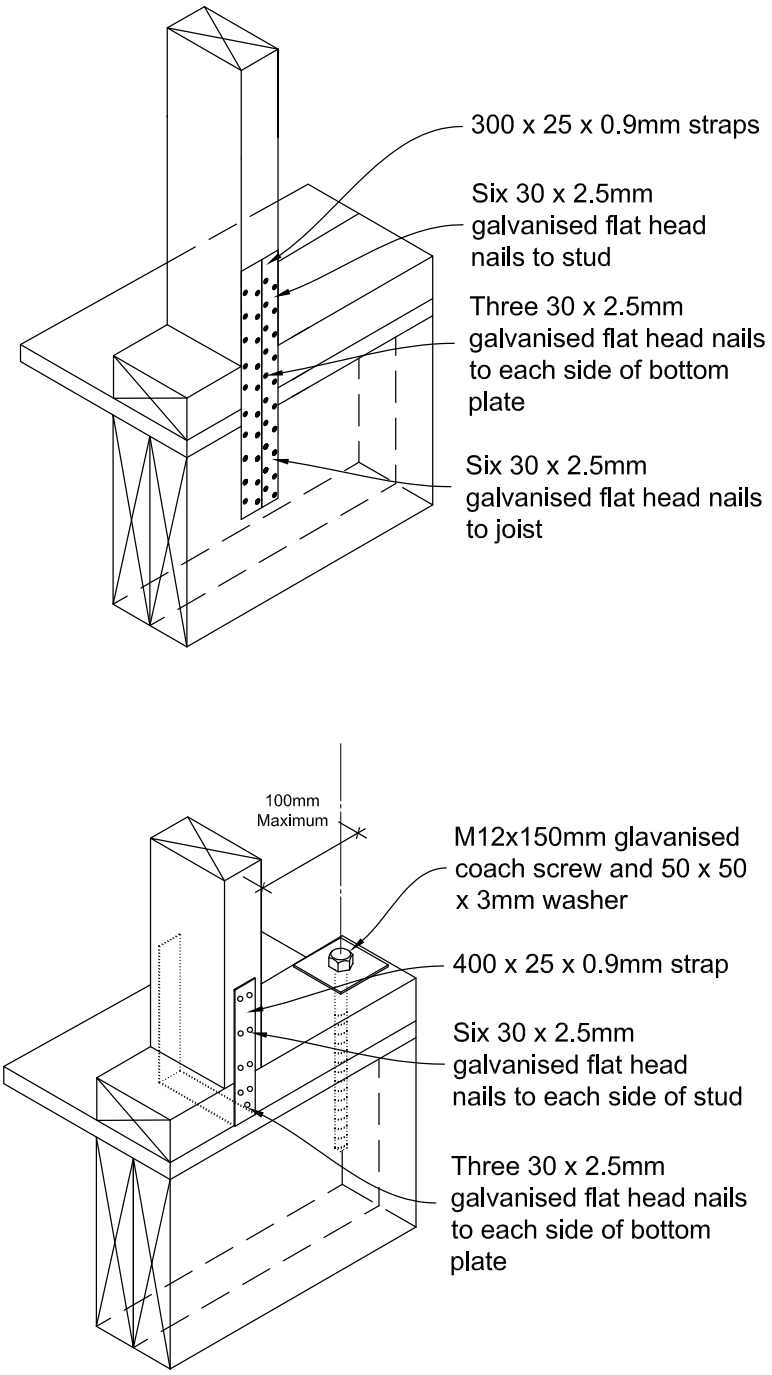

ABA20220988
APPROVED - Site Copy
Hastings District Council
20/09/2022

7 Product information

8 Finishes and maintenance

7.1 GENERAL

HomeRAB Pre-Cladding and RAB Board are cellulose fibre reinforced cement building products. The basic composition is Portland cement, ground sand, cellulose fibre and water.

RAB Board is easily identified by the name RAB Board printed on the back face. It has a green colour water repellant sealer applied on its front face.

HomeRAB Pre-Cladding is easily identified by the name 'HomeRAB Pre-Cladding' on the front face. It has a green colour water repellent sealer applied on its front face. The name is also printed on the back face of the lining.

HomeRAB Pre-Cladding and RAB Board are manufactured to conform to the requirements of AS/NZS 2908.2 'Cellulose-Cement Products Part 2: Flat Sheet (ISO 8336).

HomeRAB Pre-Cladding and RAB Board are classified Type B, Category 3 in accordance with AS/NZS 2908.2.

For Safety Data Sheets (SDS) visit www.jameshardie.co.nz or Ask James Hardie on 0800 808 868.

7.2 DURABILITY

Resistance to moisture/rotting

James Hardie rigid air barriers have been assessed for permanent moisture induced deterioration (rotting) and have met the performance requirements of AS/NZS 2908.2.

Resistance to fire

James Hardie rigid air barriers have been tested/assessed and are classified as Non-Combustible Material.

7.3 ALPINE REGIONS

In regions subject to freeze/thaw conditions, James Hardie rigid air barriers must not be in direct contact with snow or ice build up e.g. external walls in alpine regions subject to snow drifts over winter. James Hardie rigid air barriers have been tested to resist freeze thaw in accordance with AS/NZS 2908.2 clause 8.2.3 requirements and is suitable for use in alpine regions.

The selected cladding must be installed and finished within 180 days after the installation of James Hardie rigid air barriers, and the cladding must comply with the requirements of the NZBC. Regular cleaning and maintenance of claddings paints, joints, junctions, penetrations, flashings etc must be carried out at regular intervals and as per the requirements of the material manufacturers. Regular maintenance of cladding is also a requirement under the NZBC.

The ground clearances required for the James Hardie rigid air barriers and the cladding must always be maintained.

ABA20220988
APPROVED - Site Copy
Hastings District Council
20/09/2022

Notes

ABA20220988
APPROVED - Site Copy
Hastings District Council
20/09/2022

Product Warranty

HomeRAB™ PRE-CLADDING | RAB™ BOARD

James Hardie New Zealand Limited ("James Hardie") warrants for a period of 15 years from the date of purchase that the HomeRAB™ Pre-Cladding/RAB™ Board (the "Product"), will be free from defects due to defective factory workmanship or materials and, subject to compliance with the conditions below, will be resistant to cracking, rotting, fire and damage from termite attacks to the extent set out in James Hardie's relevant published literature current at the time of installation. James Hardie warrants for a period of 15 years from the date of purchase that the accessories supplied by James Hardie will be free from defects due to defective factory workmanship or materials. Nothing in this document shall exclude or modify any legal rights a customer may have under the Consumer Guarantees Act or otherwise which cannot be excluded or modified at law.

CONDITIONS OF WARRANTY:

The warranty is strictly subject to the following conditions:

a) James Hardie will not be liable for breach of warranty unless the claimant provides proof of purchase and makes a written claim either within 30 days after the defect would have become reasonably apparent or, if the defect was reasonably apparent prior to installation, then the claim must be made prior to installation;

b) this warranty is not transferable;

c) the Product must be installed and maintained strictly in accordance with the relevant James Hardie literature current at the time of installation and must be installed in conjunction with the components or products specified in the literature. Further, all other products, including coating and jointing systems, applied to or used in conjunction with the Product must be applied or installed and maintained strictly in accordance with the relevant manufacturer's instructions and good trade practice;

d) the project must be designed and constructed in strict compliance with all relevant provisions of the current New Zealand Building Code ("NZBC"), regulations and standards;

e) the claimant's sole remedy for breach of warranty is (at James Hardie's option) that James Hardie will either supply replacement product, rectify the affected product or pay for the cost of the replacement or rectification of the affected product;

f) James Hardie will not be liable for any losses or damages (whether direct or indirect) including property damage or personal injury, consequential loss, economic loss or loss of profits, arising in contract or negligence or howsoever arising. Without limiting the foregoing James Hardie will not be liable for any claims, damages or defects arising from or in any way attributable to poor workmanship, poor design or detailing, settlement or structural movement and/or movement of materials to which the Product is attached, incorrect design of the structure, acts of God including but not limited to earthquakes, cyclones, floods or other severe weather conditions or unusual climatic conditions, efflorescence or performance of paint/coatings applied to the Product, normal wear and tear, growth of mould, mildew, fungi, bacteria, or any organism on any Product surface or Product (whether on the exposed or unexposed surfaces);

g) all warranties, conditions, liabilities and obligations other than those specified in this warranty are excluded to the fullest extent allowed by law;

h) if meeting a claim under this warranty involves re-coating of Products, there may be slight colour differences between the original and replacement Products due to the effects of weathering and variations in materials over time.

Disclaimer: The recommendations in James Hardie's literature are based on good building practice, but are not an exhaustive statement of all relevant information and are subject to conditions (c), (d), (f) and (g) above. James Hardie has tested the performance of the HomeRAB™ Pre-Cladding/RAB™ Board when installed in accordance with the HomeRAB™ Pre-Cladding/RAB™ Board installation manual in accordance with the standards and verification methods required by the NZBC and those test results demonstrate the product complies with the performance criteria established by the NZBC. However, as the successful performance of the relevant system depends on numerous factors outside the control of James Hardie (e.g. quality of workmanship and design) James Hardie shall not be liable for the recommendations made in its literature and the performance of the relevant system, including its suitability for any purpose or ability to satisfy the relevant provisions of the NZBC, regulations and standards, as it is the responsibility of the building designer to ensure that the details and recommendations provided in the relevant James Hardie installation manual are suitable for the intended project and that specific design is conducted where appropriate.

Copyright 2020. © James Hardie New Zealand Limited. TM and ® denotes a Trademark or Registered Mark owned by James Hardie Technology Limited.

JamesHardie™

ABA20220988
APPROVED - Site Copy
Hastings District Council
20/09/2022



Ask James Hardie™ | Call 0800 808 868 | jameshardie.co.nz

Copyright 2020. © James Hardie New Zealand Limited. TM and ® denotes a Trademark or Registered Mark owned by James Hardie Technology Limited.

ABA20220988
APPROVED - Site Copy
Hastings District Council
20/09/2022

Thermakraft™

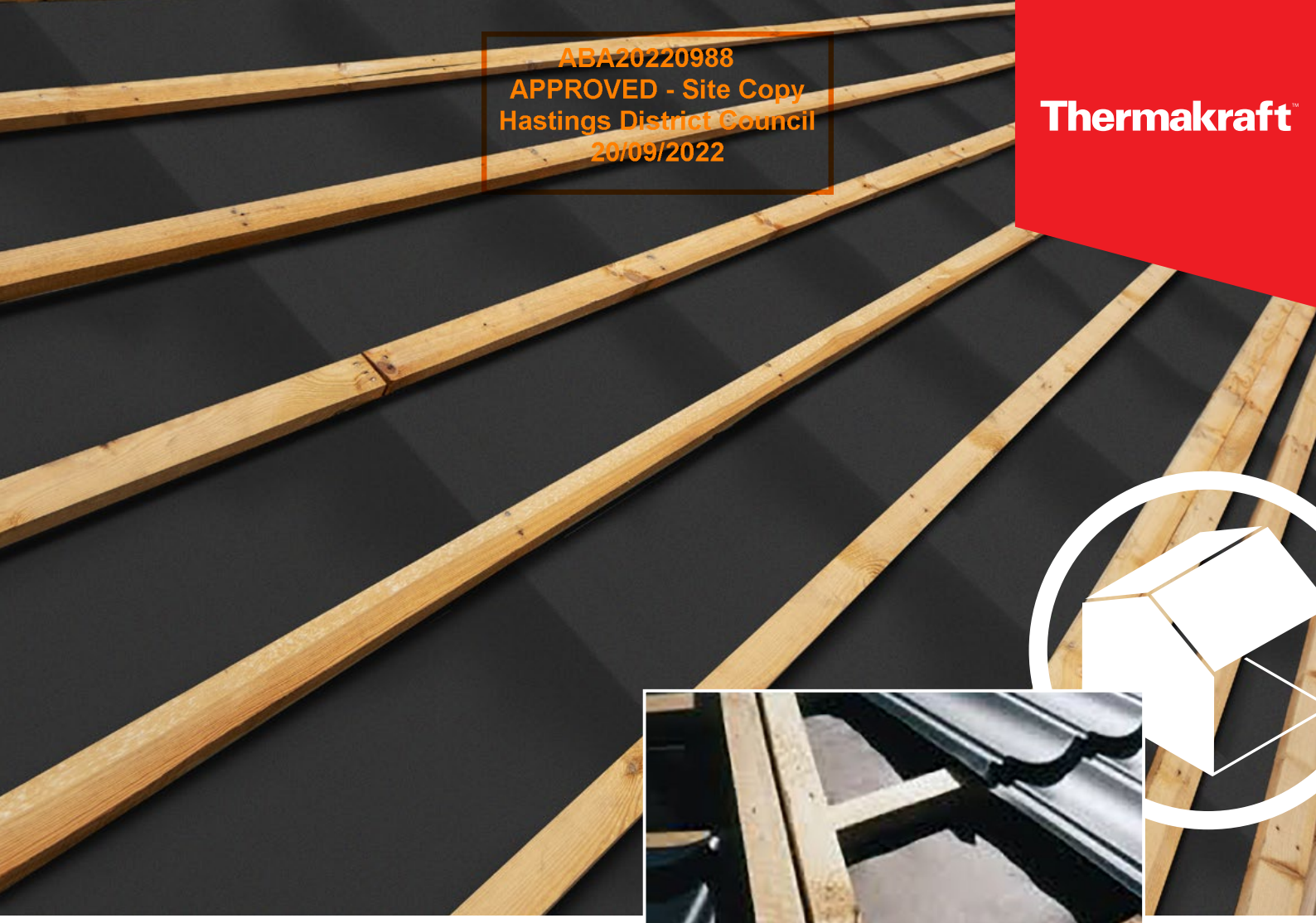

Installation Guide

THERMAKRAFT 215

Self-supporting bituminous wall and roof underlay

Commonly referred to as “Building Paper” Thermakraft 215 is a self-supporting, kraft paper based, bituminous building underlay that is suitable for use on roofs and walls in residential buildings. It is vapour permeable, meaning that liquid water from the outside is prevented from penetrating but water vapour from the inside can pass through and escape the building envelope. Thermakraft 215 is easy to install.

Smarter products. Better buildings.
thermakraft.co.nz

Installation Guide

ABA20220988
APPROVED - Site Copy
Hastings District Council
20/09/2022

Thermakraft

Application Method (Roofing)

Thermakraft 215 is a bituminous building underlay used on roofs in residential buildings.

- Thermakraft 215 can be used in direct fix or cavity fix for roof construction.
- Run NO longer than 10m.

Long-run metal roofing/vertical or horizontal installation method

- Fix using stainless steel 8-12mm staples or 20mm flat head clouts, or appropriate proprietary fastenings on timber framed structure. Fixing at 300mm centres. Fixing types and requirements for steel framed structure can be found in the MRM Code of Practice.
- Refer to table below to determine underlay support requirements.

Roof Pitch	Span	Underlay Support Required	
		Horizontally Installed	Vertically Installed
≥ 10°	> 1200mm	Yes	Yes
	≤ 1200mm	No	No
< 10° (Min 3°)	> 1200mm	Yes	Yes
	≤ 1200mm	No	Yes

- Thermakraft 215 upper sheet lapped over lower sheets (shiplap) to ensure water is shed to the outer face.
  Note: Thermakraft 215 can move downwards. To prevent this, it must be "Captured" by the fastenings at each purlin. Horizontal fix must not be used on purlin distance greater than 1100mm to allow for 150mm laps.
- Must be laid firmly (tight/taut) without creases. All laps either vertical or horizontal must be a minimum of 150mm lap.
- When underlay support is required, Thermakraft recommend using AUSMESH Safety Mesh, AUSNET hexagonal netting or Thermastrap 201.
- Thermakraft 215 can be installed above the battens or purlins for profiled metal roof claddings and otherwise in accordance with NZBC E2/AS1.
- If required to achieve a lap seal (refer to NZ Metal Roofing Code of Practice), use Thermakraft Aluband window sealing tape or Thermakraft White General Purpose Tape.
- Thermakraft 215 will provide temporary weather protection during construction, same day coverage recommended. DO NOT over expose the product to the weather or UV for more than 7 days in any roof applications.
- Thermakraft 215 may be unwound to the full length from the gutter to the ridge. However, when ridge ventilation is required Thermakraft 215 may be terminated or slit at the ridge purlin to allow a free passage of air.
- Thermakraft 215 must NOT overhang the gutter line by more than 20 mm, or if eaves flashings are used, terminate on the upper side of the flashing. More details can be found in the MRM Code of Practice.
- Flue penetrations must have a minimum distance of 50mm from Thermakraft 215 (refer to NZ Metal Roof and Wall Cladding Code of Practice 10.11.5).
- Thermakraft 215 must be free of tears and punctures, fit tightly and be lap taped around all penetrations (except flue penetrations), to provide drainage for any condensation, or surface water from leaks.

Note: Do not use Aluband on penetrations where Polybutene water pipes have been installed. Refer Pipe Manufacturers for instructions on sealing penetrations.

Concrete/Metal tile roofing

- Thermakraft 215 must be laid over rafters prior to fixing the tile battens. The maximum span between rafters for Thermakraft 215 is 1200mm. Masonry tile roofs must have antiponding boards in accordance with NZBC E2/AS1 Paragraph 8.2.5.
- Installed Thermakraft may be laid over the top of the antiponding boards and draped into the gutter by no more than 20mm. Antiponding boards must be treated in accordance with NZS 3604.
- Do NOT Run Thermakraft 215 longer than 10m in length.

Application Method (Wall)

- Fix Thermakraft 215 underlay with printed side facing the exterior.
- Fix to all exterior walls from below bearers to the top plate. Pull the Thermakraft 215 underlay tight and fix securely to the frame with fasteners such as galvanized Little Grippers, 6mm-8mm staples or 20mm large head galvanized clouts at 300mm centres horizontally and vertically. Additional fasteners should be used around each opening to be cut out. Fixing types and requirements for steel framed structure can be found in the MRM Code of Practice.

Installation Guide

ABA20220988
APPROVED - Site Copy
Hastings District Council
20/09/2022

- When fixing Thermakraft 215 underlay to Steel framing the same procedures applies, use adhesive spray or tape or flat head screws to fasten to the framing or thermal break, the exterior cladding fastenings will act as the permanent fixings.
- Cover all windows and door openings with Thermakraft 215 underlay.
- It is recommended that the Thermakraft 215 underlay is not cut and prepared for window installation until the arrival of the windows. minimum of 150mm lap is required at joins, all vertical laps must be made over studs. Horizontal laps to be laid ship lap style allowing water to be shed to the outer face of the membrane.
- When windows and doors are ready for installation, the Thermakraft 215 underlay covering the openings should cut at 45° and folded into the opening and securely fastened. Thermakraft window flashing tapes are recommended as the window flashing system.
  Note: In accordance with NZBC Acceptable Solution E2/AS1, wall underlay must be prevented from bulging into the drained cavity. Where stud spacing is greater than 450mm Thermakraft stud strap run horizontal at 300 centres is an acceptable means of prevention.
- Once installed, Thermakraft 215 must not be left exposed to the weather or UV for a maximum of 28 days. Thermakraft 215 underlays will provide temporary weather protection during construction allowing work to continue. Internal linings and insulation must not be installed until the exterior cladding is completed.
- Fastenings behind Brick Veneer Cladding must have an equivalent service life to that of Brick Veneer (50 years). Refer to NZS 3604.
- Make good any forced tears with Thermakraft window flashing tapes. Any large areas which require repair may be covered with a second layer of underlay, a lap of 150mm is required.
- For wall cavity systems where stud spacings are greater than 450mm centres, another means of restraint is required on the flexible underlay to prevent insulation bulge (refer to E2/AS1).
- Thermakraft 215 underlay must be installed by a licensed building practitioner.

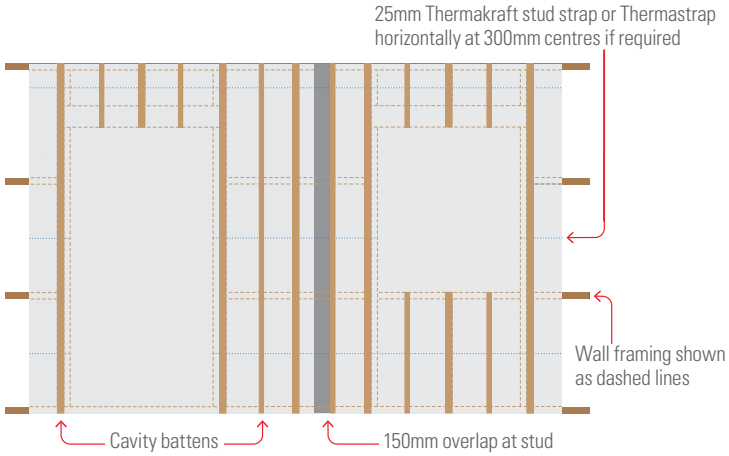

Application Tips

- Unaffected by LOSP or other solvent based treated timber. However, LOSP or other solvent based treated timber must have sufficient time for the solvent chemical to flash off in a well ventilated area. Recommended minimum 7 days.

Handling and Storage

Thermakraft 215 underlay must be handled with care to prevent damage such as tearing and roll deformation. Due to the width of the product, care should be taken when installing in windy conditions.

The product must be stored under cover well away from direct moisture, rainfall contact and sunlight (UV). Care should be taken not stack other materials on top of the product.

The recommendations contained in Thermakraft's literature are based on good building practice, but are not an exhaustive statement of all relevant information and are subject to any conditions contained in the Warranty. All product dimensions and performance claims are subject to any variation caused by normal manufacturing process and tolerances. Furthermore, as the successful performance of the relevant system depends on numerous factors outside the control of Thermakraft (for example quality of workmanship and design), Thermakraft shall not be liable for the recommendations in that literature and the performance of the Product, including its suitability for any purpose or ability to satisfy the relevant provisions of the Building Code, regulations and standards. Literature subject to change without notification. Latest documentation can be found on the website. E&OE.

Issue 1, November 2019

ABA20220988
APPROVED - Site Copy
Hastings District Council
20/09/2022

Linea™ WEATHERBOARD | JH™

jameshardie.co.nz

Cavity Fix

Technical Specification

May 2020 New Zealand



ABA20220988
APPROVED - Site Copy
Hastings District Council
20/09/2022

Linea™ WEATHERBOARD | JH™



We value your feedback!

To continue with the development of our products and systems, we value your input. Please send any suggestions, including your name, contact details, and relevant sketches to:

Ask James Hardie™
literaturefeedback@jameshardie.co.nz

Make sure your information is up to date

When specifying or installing James Hardie products, ensure that you have the current manual. Additional installation information, warranties and warnings are available at **www.jameshardie.co.nz** or **Ask James Hardie™ on 0800 808 868.**

ABA20220988
APPROVED - Site Copy
Hastings District Council
20/09/2022

Contents

1 Product Overview 4

1.1 Product Information 4
1.2 Manufacturing and Classification 5
1.3 Components and Accessories 5

2 Application and Scope 9

2.1 Application 9
2.2 Scope 9
2.3 Limitations 9
2.4 Details 9

3 Compliance 10

3.1 NZBC Compliance 10

4 Design 10

4.1 Responsibility 10
4.2 Clearances 11
4.3 Structure 11
4.3.1 Timber Framing 11
4.3.2 Durability 11
4.4 Structural Bracing 11
4.5 Energy Efficiency 11
4.6 Fire Rated Walls 11
4.7 Control of External Fire Spread 12
4.8 Alpine regions 12

5 Safe Working Practices 13

5.1 Storage and delivery 15
5.2 Tips for safe and easy handling of weatherboard products 16

6 Installation 16

6.1 Fastener 16
6.1.1 Fastener – Size and Method 16
6.1.2 Gun Nailing 17
6.1.3 Fastener Durability 17
6.2 Framing 18
6.2.1 Specific Engineering Design (SED) 18
6.2.2 Gable Ends 18
6.2.3 Tolerances 19
6.3 Flexible Underlay or HomeRAB Pre-Cladding 19
6.4 Intermediate Support 19
6.5 Rigid Air Barrier 19
6.6 Vent Strip 19
6.7 Cavity Battens 19
6.8 Joints 20
6.8.1 Jointing 20
6.8.2 Drainage Joint 20
6.8.3 External Corner Joint 20
6.8.4 Internal Corner Joint 20
6.9 Junctions and Penetrations 20

7 Finishes 21

7.1 Preparation and Priming 21
7.2 Sealants 21
7.3 Painting 21

8 Care and Maintenance 22

9 Details Section Index 23

Product Warranty 51

ABA20220988
APPROVED - Site Copy
Hastings District Council
20/09/2022

1 Product Overview

1.1 Product Information

Linea™ Weatherboard is an external cladding.

Linea Weatherboard is a 16mm thick, pre-primed bevel back fibre cement weatherboard. The bottom front edge of Linea Weatherboard is chamfered. It has tongue and groove ends for jointing and is classified as lightweight wall cladding for use in residential and light commercial buildings using timber or lightweight steel framed external walls. Linea Weatherboard is available in 135mm, 150mm and 180mm widths.

James Hardie also has available:

- Axent™ Fascia is a 16mm thick, pre-primed fibre cement product available in two widths. It's designed to accommodate James Hardie soffit linings.
- Axent™ Trim is a 16mm thick, pre-primed fibre cement product available in two widths. For use as decorative trims around openings and external corners.

For fixing to a steel frame. Ask James Hardie™ on 0800 808 868 for specific requirements. Or refer to the James Hardie cladding to steel framing technical supplement about the installation of Linea Weatherboard to steel frame.

Table 1

Linea Weatherboard and Axent Trim sizes									
							Coverage Information		
Product	Code	Length (mm)	Width (mm)	Thickness (mm)	End details	Effective cover (mm)	No. of planks/ metre height (approx.)	Mass kg/lineal m (approx. at EMC)	Mass kg/m2 (approx. at EMC)
Linea Weatherboard 135	401844	4200	135	16	T & G	105	9.5	2.62	25.70
Linea Weatherboard 150	402533	4200	150	16	T & G	120	8.3	3.1	24.93
Linea Weatherboard 180	401847	4200	180	16	T & G	150	6.7	3.57	23.92
Axent Trim 84mm	401943	2600	84	16	Square	N/A	N/A	1.6	N/A
Axent Trim 100mm	401930	2600	100	16	Square	N/A	N/A	1.9	N/A

The effective thickness of finished Linea Weatherboard on the wall at the lap is approximately 33 to 35mm

All dimensions and masses provided are approximate only and are subject to manufacturing tolerances.

Linea Weatherboard is categorised as a Light Weight Wall Cladding as described in the NZS 3604.

ABA20220988
APPROVED - Site Copy
Hastings District Council
20/09/2022

1.2 Manufacturing and Classification

The manufacturing process of Linea Weatherboard by James Hardie is ISO 9001 Certified.

Linea Weatherboard is an advanced lightweight cement composite cladding manufactured using a basic composition of Portland cement, ground sand, cellulose fibre and water. The product is easily identified by the name 'Linea' printed on the back.

Axent Trim is an advanced lightweight cement composite cladding manufactured using a basic composition of Portland cement, ground sand, cellulose fibre and water. The product is easily identified by the name 'Axent' printed on the back. The trims are factory sealed and primed.

Linea Weatherboard and Axent Trim products are manufactured to Australian/New Zealand Standard AS/NZS 2908.2 'Cellulose-Cement Products' (ISO 8336 'Fibre-Cement Flat Sheet').

Linea Weatherboard is classified Type A, Category 2 in accordance with AS/NZS 2908.2 "Cellulose-Cement Products".

For Safety Data Sheets (SDS) visit **www.jameshardie.co.nz** and view them in the technical literature section or Ask James Hardie on **0800 808 868**.

1.3 Components and Accessories

Table 2

Accessories/tools supplied by James Hardie			
Accessories	**Description**	**Size (mm)**	**Code**
	**External corner soaker 90º for Linea Weatherboards 180mm** • Aluminium • Copper • Stainless Steel	200 long	 **301186** **301188** **301197**
	**External corner soaker 135º for Linea Weatherboards 180mm** • Aluminium	200 long	 **301178**
	**External corner soaker 90º for Linea Weatherboards 150mm** • Aluminium • Stainless Steel	170 long	 **302820** **302821**
	**External corner soaker 90º for Linea Weatherboards 135mm** • Aluminium • Stainless Steel	155 long	 **301185** **301196**
	**External Slimline Box Corner Mould** Etched primed aluminium extrusion used to create external corner	2700 long 4000 long	**301195** **305809**
	**Linea 35mm Cavity Closer**	3000 long	**306035**
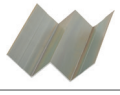	**Internal 'W' Mould 90º** Etched primed aluminium extrustion used to create 900 internal corner	2700 long 4000 long	**301184** **305807**
	**Internal 'W' Mould 135º** Etched primed aluminium extrustion used to create 135º internal corner	2700 long	**301183**

ABA20220988
APPROVED - Site Copy
Hastings District Council
20/09/2022

Table 2 contd.

Accessories/tools supplied by James Hardie			
Accessories	**Description**	**Size (mm)**	**Code**
	**JH Corner Under Flashing 50 x 50mm** PVC moulding used as under fashing for internal and external corners	3000 long	**303745**
	**Axent Trim 84mm**	84 x 2600 long	**401943**
	**Axent Trim 100mm**	100 x 2600 long	**401930**
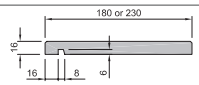	**Axent Fascia** - 180mm - 230mm	4200 long	**401843** **402230**
	**HardieFlex™ Galvanised nail - 5kg**	60 x 3.15mm	**302784**
	**HardieFlex™ Stainless steel nail - 5kg**	60 x 3.15mm	**302782**
	**HardieBlade™ Saw Blade** Diamond tip fibre cement circular saw blade. Spacers not included	4 tooth - 184mm	**300660**
	**HardieBlade™ Saw Blade** Diamond tip fibre cement circular saw blade. Spacers not included	6 tooth - 254mm	**303375**
	**Gecko Gauge** This easy to use tool gauges and supports the weatherboard for a one person install.		**305941**

ABA20220988
APPROVED - Site Copy
Hastings District Council
20/09/2022

Table 3

Accessories not supplied by James Hardie

James Hardie recommends the following products for use in conjunction with its Linea Weatherboard and Axent Trim. James Hardie does not supply these products. There may also be some other accessories required depending upon the application. Please contact component manufacturer for information on their warranties and further information on their products.

Accessories	Description	Size (mm)	Material/ appearance
	**Flexible Underlay** To comply with Table 23 of E2/AS1		
	D head or RounDrive Nail Gun nail for concealed fixing Linea Weatherboard.	60 x 2.87	Hot Dip Galvanised/ Stainless Steel
	**HardieFlex™ Hot Dip Galv. Nails** For concealed fixing by hand nail	60 x 3.15mm 75 x 3.15mm	Hot Dip Galvanised/ Stainless Steel
	Jolt Head Nail for face fixing Linea Weatherboard	75 x 3.15mm 90 x 3.55mm	Hot Dip Galvanised/ Stainless Steel
	Titanium Coated High Speed Drill Bit. For pre-drilling prior to face fixing with jolt head.	3.0mm 3.5mm	
	Brad Nail To tie boards together	32mm	
	**Joint sealant** Paintable flexible sealants are recommended for filling the joints. Refer to Section 7.2 for information.	Tube	Sika, Bostik or similar Holdfast
	**CRC ADOS Builders Fill** Two part exterior grade fill to finish over jolt head nails.		
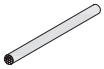	**PEF Rod**	Polyethylene foam	Sika or similar
	**Flexible tape** A flexible self-adhesive tape used in preparation of a window. Refer to the Window installation section in this manual for more information.	Proprietary tape to adhere to flexible underlay	Tyvek, Marshall Innovations or similar
	**Flashing Material** as per Table 20, 'E2/AS1'		Flashing Fabricator
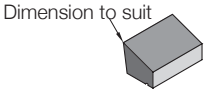	**Planted Sill**		H3.1 minimum Treated Timber Timber Merchant or cut on site

ABA20220988
APPROVED - Site Copy
Hastings District Council
20/09/2022

Table 3 contd.

Accessories not supplied by James Hardie			
Accessories	**Description**	**Size (mm)**	**Material/ appearance**
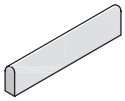	**Timber Scriber** To scribe beside window, site cut to suit.	As required	H3.1 minimum Treated Timber Timber Merchant or cut on site
	**Fibre Cement Cutting Blade** Diamond tip 305mm diameter circular saw blade to fit drop saw.	305mm	Diamond Tipped
	**Cavity Closer - aluminium** Used in walls taller than 10m for inter-tenancy fire separation.		
	Primers. Dulux 1-Step Prep, Resene Quick Dry etc.		

ABA20220988
APPROVED - Site Copy
Hastings District Council
20/09/2022

2 Application and Scope

2.1 Application

This specification includes the installation of Linea Weatherboard cavity construction where risk matrix is 13 or more and must be read in conjunction with the current CodeMark Certificate and BRANZ Appraisal. This installation method can also be used for buildings where the risk matrix score is 0 - 12 if desired.

This document is intended for use by architects, designers, specifiers or builders who are involved in specifying Linea Weatherboard. The document also serves the purpose of an installation manual for this product.

For use of Linea Weatherboard outside this published scope, the architect, designer or engineer must undertake specific design. For advice on designs outside the scope of this specification, Ask James Hardie on 0800 808 868.

Refer to the Linea Weatherboard Direct Fixed Technical Specification when installing Linea Weatherboard without a cavity.

2.2 Scope

Linea Weatherboard cavity construction is suitable for use in timber framed buildings that fall within the scope limitations of the New Zealand Building Code (NZBC) Acceptable Solution E2/AS1, Paragraph 1.1.

Linea Weatherboard cavity construction is also suitable for use in specific engineering design projects (SED) subject to a wind pressure of 2.5kPa (ULS) maximum for building heights upto 25m.

2.3 Limitations

- Linea Weatherboard cladding must not be used on curved wall applications
- Linea Weatherboard cladding must not be installed vertically or angled
- The minimum ground clearances specified must be maintained
- Timber window joinery/recessed openings is subject to an alternative design by the designer
- Maximum SLS inter-story seismic deflections up to span/180 when used in specific design buildings (SED) buildings above 10m height. To accommodate higher inter-story drifts, a deflection should be used.

2.4 Details

Various typical Linea Weatherboard details are provided within this document. In addition to these, the construction details with HomeRAB™ Pre-Cladding/RAB™ Board have also been developed and are available on our website. These details are available in dwg, dxf, jpg and pdf file format and can be downloaded at **www.jameshardie.co.nz.**

All dimensions shown are in millimetres unless noted otherwise.

ABA20220988
APPROVED - Site Copy
Hastings District Council
20/09/2022

3 Compliance

3.1 NZBC Compliance

When installed in accordance with the conditions of CodeMark number GM-CM30018 Linea Weatherboard complies with all relevant requirements of the NZBC.

CODEMARK™
30018

Please refer to www.building.govt.nz for a copy of the certificate.

Linea Weatherboard cavity fixed cladding also has a BRANZ Appraisal number 447 (2010) available at www.branz.co.nz or www.jameshardie.co.nz.

BRANZ Appraised
Appraisal No.447 [2010]

4 Design

4.1 Responsibility

The specifier or other party responsible for the project must ensure that the information and details in this specification are appropriate for the intended application and that additional detailing is performed for specific design or any areas that fall outside the scope of this technical specification.

All New Zealand Standards referenced in this manual are current edition and must be complied with.

Specifier

If you are a specifier or other responsible party for a project ensure that the information in this document is appropriate for the application you are planning and that you undertake specific design and detailing for areas which fall outside the scope of these specifications.

Installer

If you are an installer ensure that you follow the design, moisture management principles, associated figures and material selection provided by the designer and this James Hardie Technical Specification. All the details provided in this document must be read in conjunction with the project specification.

James Hardie conducts stringent quality checks to ensure that any product manufactured falls within our quality spectrum. It is the responsibility of the builder to ensure that the product meets their aesthetic expectations before installation. James Hardie will not be responsible for rectifying obvious aesthetic surface variations following installation. James Hardie will only offer a replacement product if Linea Weatherboard or Axent Trim supplied are found to be out of its manufacturing specification.

ABA20220988
APPROVED - Site Copy
Hastings District Council
20/09/2022

4.2 Clearances

The clearance between the bottom edge of cladding and the paved/unpaved ground must comply with section 9.1.3 of E2/AS1. On the roofs and decks the minimum clearance must be 50mm. These clearances must be maintained throughout the life of the building.

Linea Weatherboard must overhang the bottom plate on a concrete slab by a minimum of 50mm as required by the NZBC Acceptable Solution, E2/AS1 Table 18.

The site on which the building is situated must comply with the NZBC Acceptable Solution E1/AS1 ‘Surface Water’.

Do not install cladding such that it may remain in contact with water or ground, refer to figures in section 9 of this manual.

4.3 Structure

4.3.1 Timber Framing

Timber framing must be in accordance with NZS 3604 (Timber-framed buildings) or designed as for specific engineering design (SED) in accordance with NZS 3603 and AS/NZS 1170 where specific engineering design is required, the framing stiffness must be equivalent to or more than the framing provisions of NZS 3604.

The stud spacing must not exceed 600mm centres maximum for buildings within the scope of NZS 3604 and 400mm centres maximum for wind pressures more than 1.5kPa (ULS).

For timber frame walls longer than 12m, it is best practice to allow for construction joints to accommodate movements generated due to timber shrinkage or deflections.

4.3.2 Durability

Timber framing must be treated to a minimum H1.2 treatment requirements and comply with Acceptable Solution B2/AS1 ‘Durability’ of the NZBC. For further timber treatment information refer to the NZS 3602 (Timber and Wood-Based Products for use in Buildings) for minimum timber treatment selection and treatment requirements. Framing must be protected from moisture at sites in accordance with the recommendations of framing manufacturers. Refer to the NZS 3602 for information about the allowable moisture content in timber framing.

4.4 Structural Bracing

Bracing can be achieved by using HomeRAB Pre-Cladding or RAB Board installed direct to framing instead of a flexible underlay or by using Villaboard™ Lining bracing system on the internal face.

4.5 Energy Efficiency

External walls constructed as per this technical specification, using Linea Weatherboard cladding must use suitable bulk insulation to meet the minimum thermal insulation requirements as per Clause H1/AS1 'Energy Efficiency' of the NZBC.

4.6 Fire Rated Walls

External walls with Linea Weatherboard cavity fix construction method can achieve fire ratings up to 60/60/60 when constructed in accordance with the James Hardie Fire and Acoustic Design Manual. Linea Weatherboard must be face fixed for fire rated applications.

Refer to the Fire and Acoustic Design Manual for further information about fire rated systems.

ABA20220988
APPROVED - Site Copy
Hastings District Council
20/09/2022

4.7 Control of External Fire Spread

External spread of fire (clause C3.5 and C3.7) apply where:

- Building height is greater than 10m and upper floors have sleeping uses or are different property (C3.5), and
- Where the building is located within 1m of a relevant boundary (C3.7)

Refer to Table 5.1 of Section 5.4 of C/AS1 for group SH or table 5.5 of Section 5.8.1 of C/AS2 for the other risk groups to identify the external fire spread requirement applicable to the external cladding material and surface finish.

For the other situations where 'no requirement' is listed, Linea Weatherboard installed as per the details published in this specification complies.

For buildings that are >10m high and contain tenancies above as per Table 5.5. of C/AS2, Linea Weatherboard installed over timber cavity battens in conjunction with RAB Board with R2.2 fibreglass/James Hardie mineral insulation complies. Refer to Figure 38 and 39 for RAB Board and cavity batten layout. For the complete set of suitable Linea Weatherboard cavity construction details with RAB Board for this application, refer to www. jameshardie.co.nz.

4.8 Alpine regions

In regions subject to freeze/thaw conditions, Linea Weatherboard must not be in direct contact with snow or ice build up for extended periods, e.g. external walls in alpine regions subject to snow drifts over winter.

The Linea Weatherboard has been tested in accordance with AS/NZS 2908.2 Clause 8.2.3.

ABA20220988
APPROVED - Site Copy
Hastings District Council
20/09/2022

5 Safe Working Practices

WARNING - DO NOT BREATHE DUST AND CUT ONLY IN WELL VENTILATED AREA

James Hardie products contain sand, a source of respirable crystalline silica may cause cancer if dust from product is inhaled. Causes damage to lungs and respiratory system through prolonged or repeated inhalation of dust from product.

Intact fibre cement products are not expected to result in any adverse toxic effects. The hazard associated with fibre cement arises from the respirable crystalline silica present in dust generated by activities such as cutting, rebating, drilling, routing, sawing, crushing, or otherwise abrading fibre cement, and when cleaning up, disposing of or moving dust.

When doing any of these activities in a manner that generates dust, follow James Hardie instructions and best practices to reduce or limit the release of dust.

If using a dust mask or respirator, use an AS/NZS1716 P1 filter and refer to Australian/New Zealand Standard 1715:2009 Selection, Use and Maintenance of Respiratory Protective Equipment for more extensive guidance and more options for selecting respirators for workplaces. For further information, refer to our installation instructions and Safety Data Sheets available at www.jameshardie.co.nz.

FAILURE TO ADHERE TO OUR WARNINGS, SAFETY DATA SHEETS, AND INSTALLATION INSTRUCTIONS MAY LEAD TO SERIOUS PERSONAL INJURY OR DEATH.

Crystalline Silica is

- Commonly known as sand or quartz
- Found in many building products e.g. concrete, bricks, grout, wallboard, ceramic tiles, and all fibre cement materials

Why is Crystalline Silica a health hazard?

- Silica can be breathed deep into the lungs when present in the air as a very fine (respirable) dust
- Exposure to silica dust without taking the appropriate safety measures to minimise the amount being breathed in, can lead to a potentially fatal lung disease – silicosis – and has also been linked with other diseases including cancer. Some studies suggest that smoking may increase these risks
- The most hazardous dust is the dust you cannot see!

When is Crystalline Silica a health hazard?

- It's dangerous to health if safety protocols to control dust are not followed when cutting, drilling or rebating a product containing crystalline silica and when cleaning up
- Products containing silica are harmless if intact (e.g. an un-cut sheet of wall board)

Avoid breathing in crystalline silica dust

Safe working practices

✕ NEVER use a power saw indoors or in a poorly ventilated area

✕ NEVER dry sweep

✓ ALWAYS use M Class or higher vacuum or damp down dust before sweeping up

✕ NEVER use grinders

✓ ALWAYS use a dust reducing circular saw equipped with a sawblade specifically designed to minimise dust creation when cutting fibre cement – preferably a sawblade that carries the HardieBlade™ logo or one with at least equivalent

ABA20220988
APPROVED - Site Copy
Hastings District Council
20/09/2022

performance – connected to an M Class or higher vacuum

- ✓ Before cutting warn others in the area to avoid dust
- ✓ ALWAYS follow tool manufacturers' safety recommendations
- ✓ ALWAYS expose only the minimum required depth of blade for the thickness of fibre cement to be cut
- ✓ ALWAYS wear a properly-fitted, approved dust mask or respirator P1 or higher in accordance with applicable government regulations and manufacturer instructions
- ✓ Consider rotating personnel across cutting tasks to further limit respirable silica exposures.

When cutting

- ✓ Work outdoors only
- ✓ Make sure you work in a well ventilated area
- ✓ Position cutting station so wind will blow dust away from yourself and others in the working area
- ✓ Rotate employees across cutting task over duration of shift
- ✓ Cut products with a HardieBlade Saw Blade (or equivalent) and a dust reducing circular saw connected to a M Class or higher vacuum
- ✓ When sawing, sanding, rebating, drilling or machining fibre cement products, always:
  - Wear your P1 or higher (correctly fitted in accordance with manufacturers' instructions), ask others to do the same.
  - Keep persons on site at least 2 metres and as far as practicable away from the cutting station while the saw is in operation
  - If you are not clean shaven, then use a powered air respirator with a loose fitting head top
  - Wear safety glasses
  - Wear hearing protection
- ✓ Make sure you clean up BUT never dry sweep. Always hose down with water/wet wipe or use an M Class or higher vacuum

If concern still exists about exposure levels or you do not comply with the above practices, you should always consult a qualified industrial hygienist or contact James Hardie for further information.

ABA20220988
APPROVED - Site Copy
Hastings District Council
20/09/2022

Working Instructions

HardieBlade™ Saw Blade

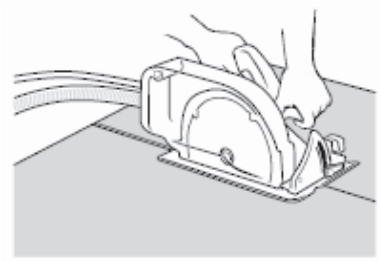

The HardieBlade Saw Blade used with a dust-reducing saw is ideal for fast, clean cutting of James Hardie fibre cement products. A dust-reducing saw uses a dust collector connected to a M Class or higher vacuum. When sawing, clamp a straight edge to the sheet as a guide and run the saw base plate along the straight edge when making the cut.

Hole-Forming



For smooth clean cut circular holes:

- Mark the centre of the hole on the sheet
- Pre-drill a 'pilot' hole
- Using the pilot hole as a guide, cut the hole to the appropriate diameter with a hole saw fitted to a heavy duty electric drill

For irregular holes:

- Small rectangular or circular holes can be cut by drilling a series of small holes around the perimeter of the hole then tapping out the waste piece from the sheet face
- Tap carefully to avoid damage to sheets, ensuring that the sheet edges are properly supported

5.1 Storage and delivery

Keeping products and people safe

Off loading

✓ James Hardie products should be off-loaded carefully by hand or by forklift

✓ James Hardie products should not be rolled or dumped off a truck during the delivery to the jobsite

Storage

James Hardie products should be stored:

✓ In their original packaging

✓ Under cover where possible or otherwise protected with a waterproof covering to keep products dry

✓ Off the ground – either on a pallet or adequately supported on timber or other spacers

✓ Flat so as to minimise bending

James Hardie products must not be stored:

✕ Directly on the ground

✕ In the open air exposed to the elements

James Hardie is not responsible for damage due to improper storage and handling.

ABA20220988
APPROVED - Site Copy
Hastings District Council
20/09/2022

5.2 Tips for safe and easy handling of weatherboard products

Weatherboard products

✕ Do not lift planked products flat and in the middle

✓ Carry the products on the edge

✓ If only one person is carrying the product, hold it in the middle and spread arms apart to better support the product

✓ If two people are carrying the plank, hold it near each end and on edge

✓ Exercise care when handling weatherboard products to avoid damaging the edges/corners

6 Installation

The horizontal lap between the two Linea Weatherboard must be 30mm minimum. In certain scenarios you may require to creep up the lap, this must not exceed 33mm.

Linea Weatherboard must be kept dry whilst in storage prior to and during fixing. Site cut ends that are exposed such as slimline box corners, internal corners etc. and any sanded patches on the boards surface must be primed prior to installation. Dust and loose material must be removed before priming.

6.1 Fastener

6.1.1 Fastener – Size and Method

Linea Weatherboard and Axent Trim must be fixed to timber with the types of nails specified in Tables 4 and 5, in accordance with the following requirements:

- Linea Weatherboard can either be face/exposed fixed or concealed fixed
- Linea Weatherboard must be fixed into studs at maximum 600mm centres. Fixing centres to coincide with stud spacing, refer to figures in section 9 of this manual
- All concealed nails must be driven flush with the board surface
- When concealed fixing Linea Weatherboard, nails must be driven under the lap of boards, except at all corners and vertical edges of openings where Linea Weatherboard must be face fixed, refer to figures in section 9 of this manual
- Nails must be fixed 25mm from the end of the board when hand nailing. For gun nailing refer to Section 6.1.2
- When using concealed fixing method, any gaps that may appear under the lap due to site conditions can be minimised by fixing a jolt head nail through the lap as per the exposed nailing method. Refer to figures in section 9 of this manual
- When using concealed fixing method, Linea Weatherboard may be tied together by face fixing through the lap using a 32mm brad nail if desired.
- When face fixing Linea Weatherboard, the upper board must be pre-drilled before fixing with a jolt head nail

ABA20220988
APPROVED - Site Copy
Hastings District Council
20/09/2022

Table 4

Wind pressure (kPa)	Underlay	Fixing method	Fixing type	Instructions
Up to 1.5 (up to and including VH Wind Zone)	Flexible underlay	Concealed nailing	60 x 3.15mm HardieFlex™ nail or a 60 x 2.87mm D/round head gun nail	Finish flush with the board surface.
		Face nailing	75 x 3.15mm jolt head nails	Hot-dipped galvanised/stainless steel jolt head nail with pre-drilling through the top weatherboard. Use a 3mm drill bit.
	Rigid air barrier	Concealed nailing	75 x 3.15mm HardieFlex™ nail or a 75 x 3.06mm D/round head gun nail	Finish flush with the board surface.
		Face nailing	90 x 3.55mm jolt head nails	Hot-dipped galvanised/stainless steel jolt head nail with pre-drilling through the top weatherboard. Use a 3.5mm drill bit.
1.5 to 2.5 (EH Wind Zone and SED projects)	RAB Board	Face nailing	90 x 3.55mm jolt head nail	Hot-dipped galvanised/stainless steel jolt head nail with pre-drilling through the top weatherboard. Use a 3.5mm drill bit.

Table 5

Nail requirements for Axent Trim	
Single thickness	60mm jolt head nails. If fixing over Linea Weatherboard use 75 x 3.15mm jolt head nails through a pre-drilled hole, using a 3mm drill bit.
Single thickness plus packer	If fixing over Linea Weatherboard use 75 x 3.15mm jolt head nails through a pre-drilled hole, using a 3mm drill bit. When fixing to timber support use 60mm jolt head nails.

For fire rated wall applications the Linea Weatherboards must be face fixed. For more information Ask James Hardie on 0800 808 868.

6.1.2 Gun Nailing

Linea Weatherboard can be gun nailed with a D-Head or RounDrive nail when concealed fixing method is used.

- Nails must be no closer than 50mm from the ends of boards when gun nailing is used, double studs will be required.
- Be minimum length and nearest gauge as per Table 4.
- Be finished flush with surface of board.

6.1.3 Fastener Durability

Fasteners must meet the minimum durability requirements of the NZBC. Refer to Table 6 for fixing materials requirements to be used in relation to the exposure conditions.

ABA20220988
APPROVED - Site Copy
Hastings District Council
20/09/2022

Table 6

Exposure conditions and nail selection prescribed by NZS 3604		
Zone	**Application**	
D (sea spray) and geothermal hot spots	General	Stainless steel 304/316
	Fire	
*C and B	General	Hot dip galvanised**
	Fire	

* Zone C areas where local knowledge dictates that increased durability is required, appropriate selection shall be made Microclimatic conditions as detailed in NZS 3604, Paragraph 4.2.4 require SED.

**Hot dip galvanised must comply with AS/NZS 4680.

Also refer to the NZBC Acceptable Solution E2/AS1 Table 20 and 21 for information regarding the selection of suitable fixing materials and their compatibility with other materials.

6.2 Framing

Framing to be in accordance with the NZS 3604. The following must be provided for fixing Linea Weatherboard:

- Studs at 600mm centres maximum for all wind speed zones up to and including very high (VH)
- Studs at 400mm centres maximum for wind pressures more than 1.5 kPa (ULS)
- Double studs are required at internal corners
- Extra packers may be required at external corners
- Extra studs are required for aluminium internal corner sections

6.2.1 Specific Engineering Design (SED)

For EH wind zone and specific engineering design projects the timber framing is required to be designed in accordance with NZS 3603 and AS/NZS 1170. The minimum framing sizes and layout must comply with this specification:

- Stud spacing 400mm centres maximum
- Nog spacing 1200mm centres maximum
- Double studs are required at internal corners
- Extra packers may be required at external corners
- Extra studs are required for aluminium internal corner sections

6.2.2 Gable Ends

In case of gable end trusses sitting on top plates of the external wall frame, the frame size must be in accordance with truss design and specification supplied by the frame and truss manufacturer/supplier supported by independent design producer statement.

ABA20220988
APPROVED - Site Copy
Hastings District Council
20/09/2022

6.2.3 Tolerances

In order to achieve an acceptable wall finish, it is imperative that framing is straight and true. Framing tolerances must comply with the requirements of NZS 3604 and the manufacturer's specifications. All framing must be made flush. The visual aspects of the finished cladding can differ between two different sites or the builders installing the product. It is recommended that you also refer to a building guidance document published by MBIE to understand an acceptable level of tolerances allowed in building materials and workmanship. www.building.govt.nz Guide to tolerances, materials and workmanship in new residential construction 2015

6.3 Flexible Underlay or HomeRAB Pre-Cladding

Flexible underlay or HomeRAB Pre-Cladding must be provided to comply with the requirements of E2/AS1 up to and including very high wind zone.

Walls which are not lined on the inside face (e.g. garage walls or gable ends) must include a rigid sheathing or an air barrier behind the cladding. HomeRAB Pre-Cladding is suitable for use as an air barrier and must be installed in accordance with James Hardie Rigid Air Barriers Installation Manual.

6.4 Intermediate Support

Where studs are at 600mm centres an intermediate means of restraining the flexible underlay and insulation from bulging into the cavity must be installed. An acceptable method to achieve this is using one of the following:

- Intermediate cavity batten between the studs; or
- 75mm galvanised mesh; or
- Polypropylene tape at 300mm centres fixed horizontally and drawn taut.

No intermediate supports are required:

- Where studs are at maximum 400mm centres; or,
- When rigid sheathings instead of flexible underlays are used.

6.5 Rigid Air Barrier

In EH wind zone or for specific design wind zone, a rigid air barrier i.e. RAB Board, must be used instead of flexible underlay.

For buildings more than 10m, RAB Board must be used. To achieve the temporary weathertightness using James Hardie rigid air barriers, windows/doors need to be installed with required flashing tapes and seals etc. Refer to James Hardie Rigid Air Barriers Installation Manual for information regarding its installation and to achieve temporary weathertightness.

6.6 Vent Strip

Linea 35mm cavity closer vent strip (uPVC) must be installed at the bottom of all walls constructed using the drained and ventilated for cavity construction method. James Hardie Linea 35mm cavity closer vent strip has an opening area of 1000mm^2/m length. It is important that the openings in the vent strip are kept clear and unobstructed to allow free drainage and ventilation of cavities. Alternate cavity closer can be used ensuring compliance of E2 and may need to be used with a cant strip.

6.7 Cavity Battens

The cavity battens provide airspace between the frame and cladding and are considered a "packer" only in this specification.

The timber battens must be minimum H3.1 treated to comply with the durability requirements of B2/AS1.

ABA20220988
APPROVED - Site Copy
Hastings District Council
20/09/2022

Cavity battens must comply with E2/AS1 and:

- Be minimum 18mm thick
- Be minimum 45mm wide
- Until claddings are fixed the battens need only to be tacked to framing with 40 x 2.8mm nails at 800mm centres maximum (batten fixing is required temporarily to keep them straight on the wall during construction)

6.8 Joints

6.8.1 Jointing

The ends of Linea Weatherboard are jointed off-stud by means of a tongue and groove joint. Tongue and groove joints may be located centrally between studs but no closer than 100mm from the edge of a stud. The joints must be staggered by 600mm minimum. Flexible sealant must be applied to the front of tongue before pushing into the groove at the time of installation. From a visual perspective, the joint line will be visible and must not be hard filled.

6.8.2 Drainage Joint

After every two floors a horizontal drainage joint flashing is required, refer to figures Figure 29 in section 9 of this manual.

6.8.3 External Corner Joint

There are a number of options to select from when detailing external corners:

- 90º corner soaker in aluminium, copper or stainless steel
- 135º corner soaker 180mm aluminium
- Aluminium boxed corners
- Box corners using Axent Trim
- Mitred corners to weatherboards

Refer to figures in section 9 of this manual.

6.8.4 Internal Corner Joint

There are a number of options to select from when detailing internal corners:

- 90º or 135º Aluminium W-mould
- Scribed corner

Refer to figures in section 9 of this manual.

6.9 Junctions and Penetrations

All windows and doors must be detailed as per the requirements of this specification. James Hardie has developed the window details for Linea Weatherboard which meet the performance requirements of E2 ‘External Moisture’, an approved document of the NZBC, refer to figures in section 9 of this manual.

ABA20220988
APPROVED - Site Copy
Hastings District Council
20/09/2022

7 Finishes

Protective coating of Linea Weatherboard and Axent Trim is required in order to meet the durability requirements of the NZBC.

7.1 Preparation and Priming

The Linea Weatherboard and Axent Trim must be dry before painting. Punch and fill all exposed nails a maximum of 2mm below the surface. Fill the hole with an exterior grade 2 part builders fill, eg CRC ADOS Builders Fill, allow to cure and using 60 grit sand paper smooth ready for painting. Prime any sanded patch on board surface or the site cut edges that will be exposed.

It is not recommended to seal gap under the lap of weatherboards as it helps in circulation of air behind the weatherboard cladding. However if sealing of the gap is undertaken, the product warranty still applies.

7.2 Sealants

All sealants must demonstrate the ability to meet the relevant requirements of the NZBC. Application and use of sealants must comply with manufacturer's instructions. Sealants, if coated, must be compatible with the paint system.

7.3 Painting

All Linea Weatherboards are pre-primed on their face and bottom edge with a factory applied acrylic base coat.

Linea Weatherboard and Axent Trim must be painted within 90 days of installation. Dark coloured paints can be used, i.e. there is no restriction on the Light Reflectance Value (LRV) of paint to be applied. All exposed faces, including the top edges under the sills and bottom edges of Linea Weatherboard, Axent Trim and accessories must be finished with an exterior paint system.

For best aesthetic results a low sheen paint is recommended.

The dark colours in certain environments may fade over a period of time. Special paints/coatings are required in certain harsh environments.

Stainless steel soakers are generally left natural. For painting over stainless steel soakers, refer to paint manufacturer as special preparation and paints are required.

Paint selection and the preparation required is dependent on paint chosen. Refer to the paint manufacturer for information before starting painting.

ABA20220988
APPROVED - Site Copy
Hastings District Council
20/09/2022

8 Care and Maintenance

The extent and nature of maintenance will depend on the geographical location and exposure of the building. It is the responsibility of the specifier to determine normal maintenance requirements to comply with the NZBC Acceptable Solution B2/AS1. As a guide, it is recommended that basic normal maintenance tasks shall include but not be limited to:

- Washing down exterior surfaces every 6-12 months* using low pressure water and a brush, and every 3-4 months in extreme coastal conditions or sea spray zones
- Re-coating exterior protective finishes. Always refer to your paint manufacturer for re-coating requirements
- Maintaining the exterior envelope and connections including junctions, penetrations, flashings and sealants
- Cleaning out gutters, blocked pipes and overflow pipes as required
- Pruning back vegetation close to or touching the building as well as ensuring the NZBC ground clearance requirements are maintained especially where gardens are concerned
- The clearances between the bottom edge of Linea Weatherboard and the finished/unfinished ground must always be maintained
- Stainless steel soakers used in extreme coastal conditions or in sea spray zones may show some signs of 'tea staining'. It is an aesthetic issue and to minimise staining soaker must be washed/polished frequently

*Do not use a water blaster to wash down the cladding. Refer to your paint manufacturer for washing down requirements.

ABA20220988
APPROVED - Site Copy
Hastings District Council
20/09/2022

9 Details Section Index

Description	Page
Figure 1: Weatherboard fixing	25
Figure 2: Batten fixing	26
Figure 3: Batten layout at window opening	26
Figure 4: Foundation detail	27
Figure 5: Enclosed Deck	27
Figure 6: Jointing off stud	28
Figure 7: External corner soaker	28
Figure 8: Aluminium box corner	29
Figure 9: Boxed corner	29
Figure 10: Mitre corner	30
Figure 11: Internal 90 ° aluminium ‘W’ mould corner	30
Figure 12: Internal 135 ° aluminium ‘W’ mould corner	31
Figure 13: Internal corner joint flashing	31
Figure 14: Wall to soffit junction 'X'	32
Figure 15: Nil soffit detail	32
Figure 16: Sloping soffit and wall junction	33
Figure 17: Window and door sill	33
Figure 18: Window head	34
Figure 19: Window jamb	34
Figure 20: Window head stop end	35
Figure 21: Window sill with facing	36
Figure 22: Window head with facings	36
Figure 23: Window jamb with facings	37
Figure 24: Door sill support detail	37
Figure 25: Pipe penetration	38
Figure 26: Continous cladding over joist	38
Figure 27: Drained flashing joint at floor level	39
Figure 28: Timber deck junction	39
Figure 29: One piece apron flashing joint	40
Figure 30: Roof to wall junction detail	40
Figure 31: Parapet flashing	41
Figure 32: Enclosed deck balustrade to wall	41
Figure 33: Enclosed balustrade to wall	42
Figure 34: Junction Linea™ Weatherboard and fascia board	43

ABA20220988
APPROVED - Site Copy
Hastings District Council
20/09/2022

Description	Page
Figure 35: Enclosed roof to wall intersection	44
Figure 36: Garage door head	45
Figure 37: Garage door jamb	45
Figure 38: Framing setout building height over 10m	46
Figure 39: Intertenancy vertical fire separation	47

For all meter box details please visit our website at **www.jameshardie.co.nz** or Ask James Hardie on **0800 808 868**.

ABA20220988
APPROVED - Site Copy
Hastings District Council
20/09/2022

Figure 1: Weatherboard fixing

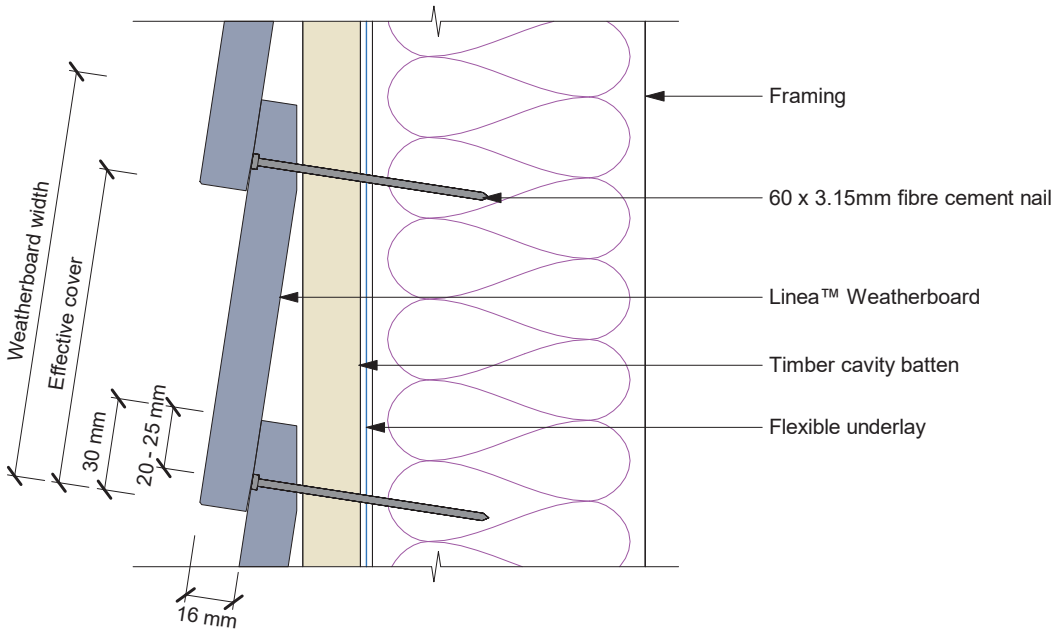

Concealed Nailing

Linea™ Weatherboards to be face fixed at corners and down window and door openings using jolt head nails at 90° to face, punch 2mm below surface and fill. Refer to fixing table 4

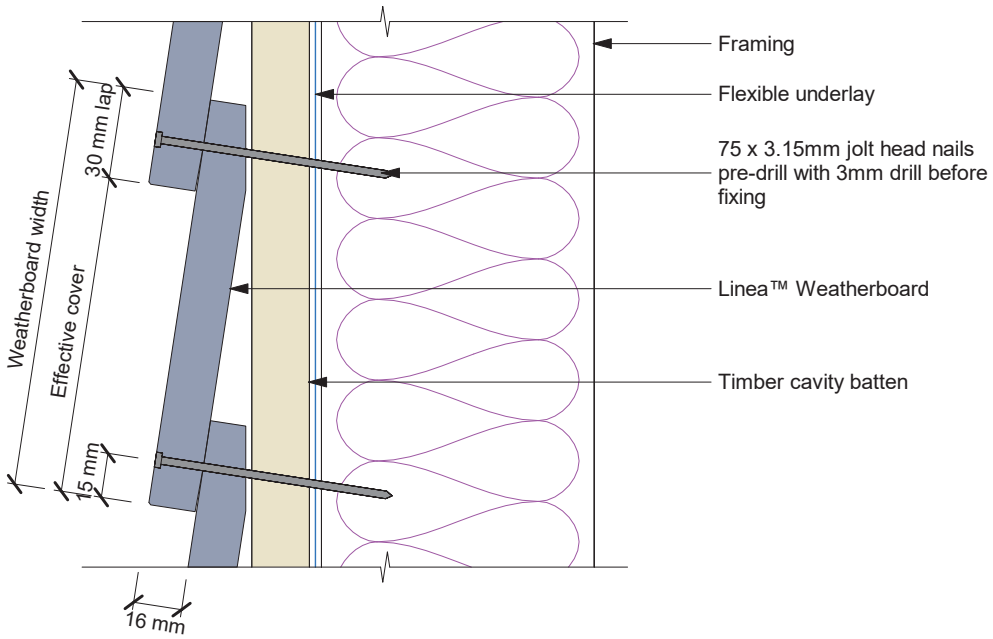

Exposed Nailing

ABA20220988
APPROVED - Site Copy
Hastings District Council
20/09/2022

Figure 2: Batten fixing

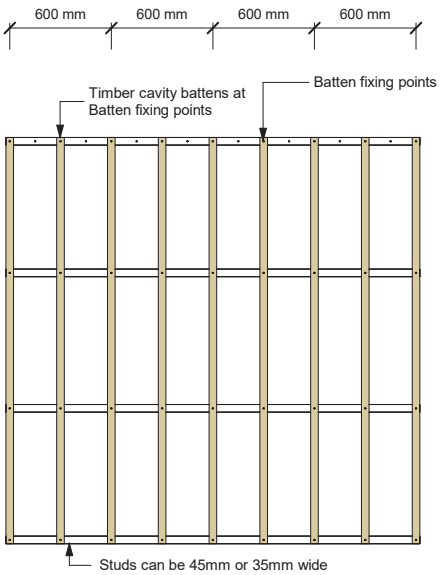

The intermediate support for insulation between the studs could be a timber cavity batten, polypropylene tape or 75 mm galvanised wire mesh. Refer to E2/AS1 Paragraph 9.1.8.5 Polypropylene tape must be fixed horizontally and drawn taut at 300 mm centres.

Figure 3: Batten layout at window opening

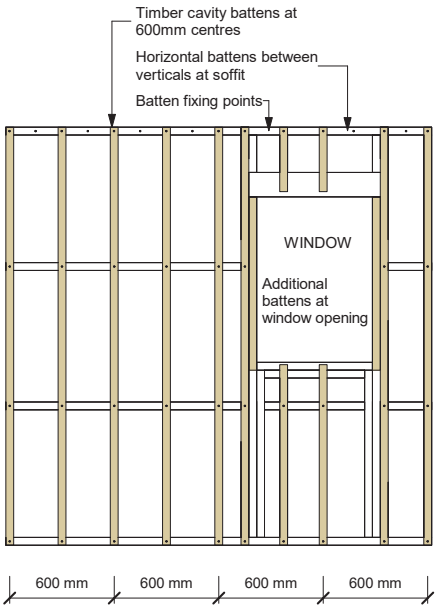

- Studs can be 45mm or 35mm wide

-The intermediate support for insulation between the studs could be a timber cavity batten, polypropylene tape or 75 mm galvanised wire mesh. Refer to E2/AS1 Paragraph 9.1.8.5 Polypropylene tape must be fixed horizontally and drawn taut at 300 mm centres.

ABA20220988
APPROVED - Site Copy
Hastings District Council
20/09/2022

Figure 4: Foundation detail

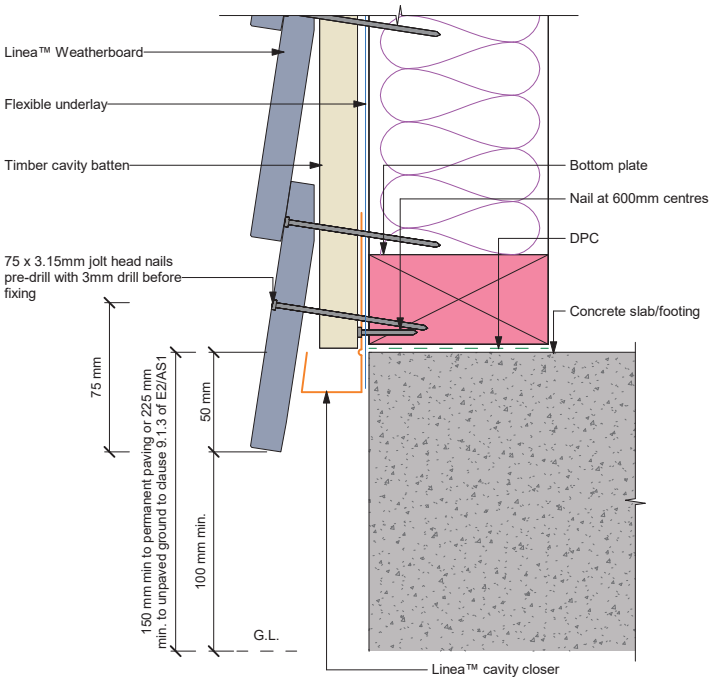

Note:
Drain holes in James Hardie uPVC vent strip are sufficient to achieve ventilation openings of 1000mm² per lineal metre

Figure 5: Enclosed Deck

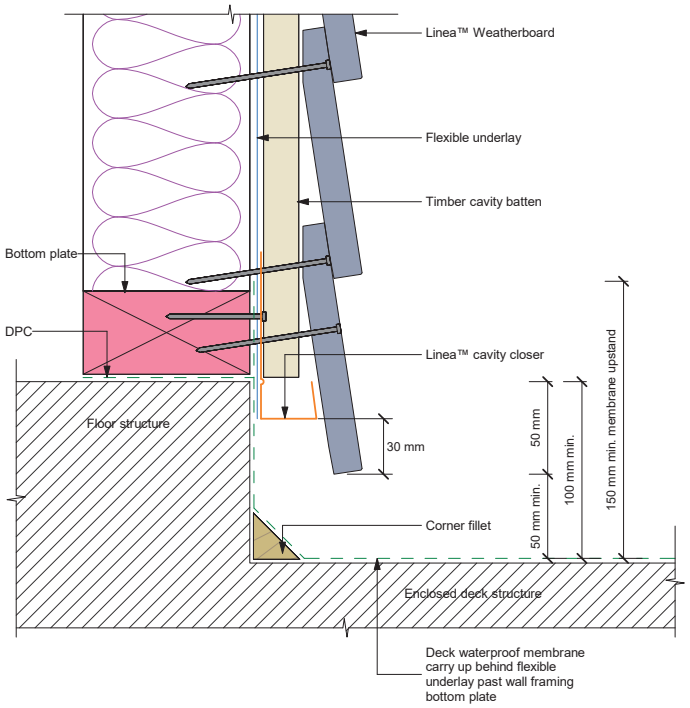

ABA20220988
APPROVED - Site Copy
Hastings District Council
20/09/2022

Figure 6: Jointing off stud

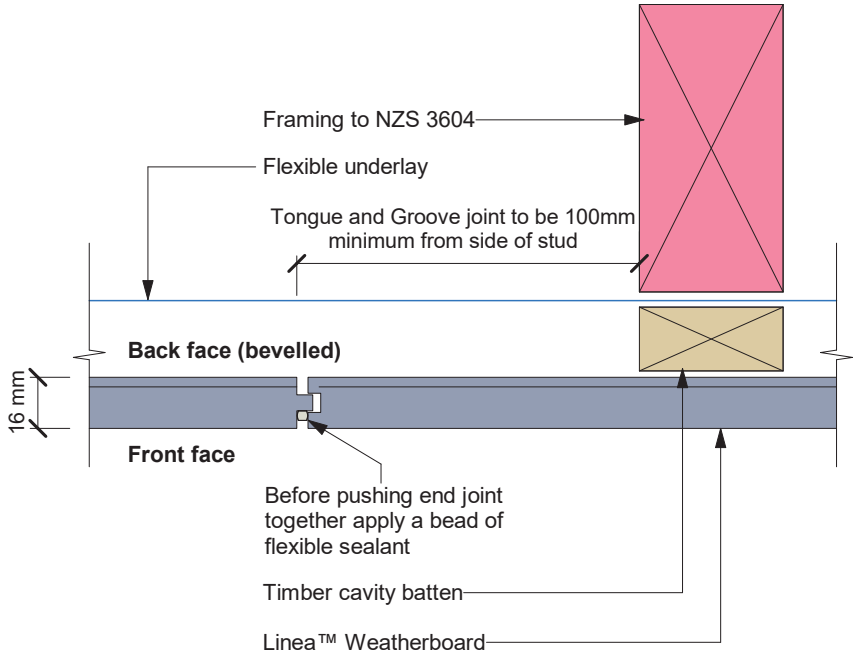

Figure 7: External corner soaker

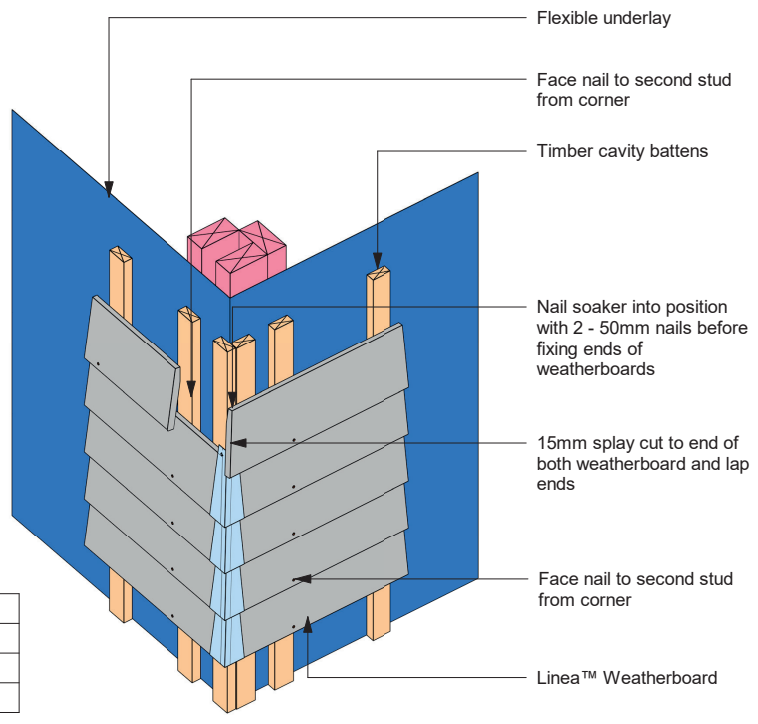

Soaker material	Nail material
Copper	Copper or phosphor bronze
Aluminium	Hot dip galvanised
Stainless steel	Stainless steel

ABA20220988
APPROVED - Site Copy
Hastings District Council
20/09/2022

Figure 8: Aluminium box corner

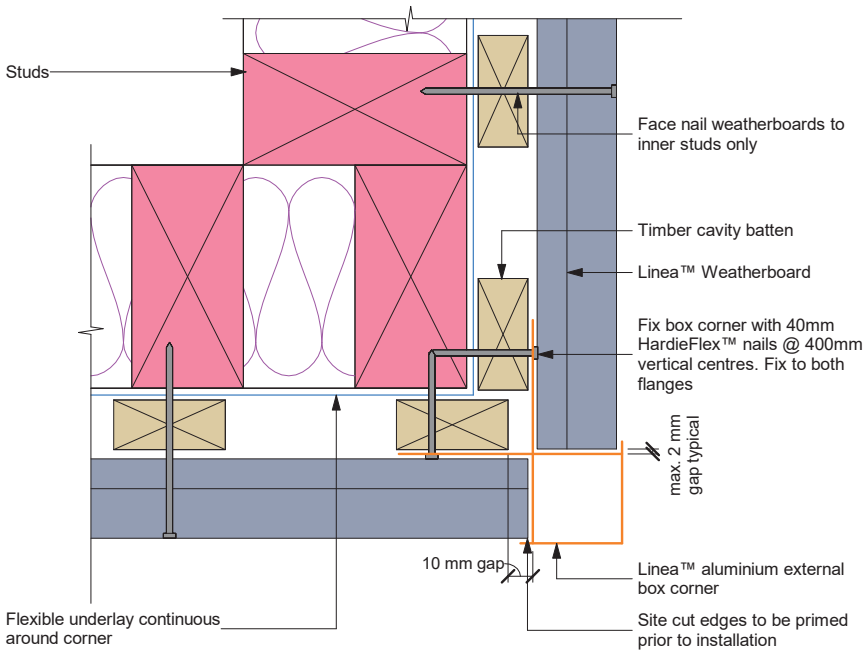

Note: Site cut edges to be primed

Figure 9: Boxed corner

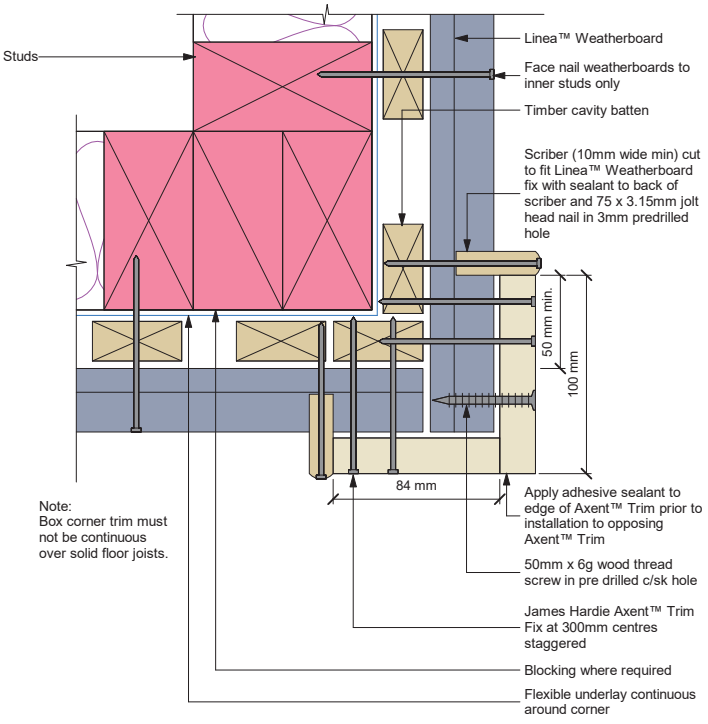

ABA20220988
APPROVED - Site Copy
Hastings District Council
20/09/2022

Figure 10: Mitre corner

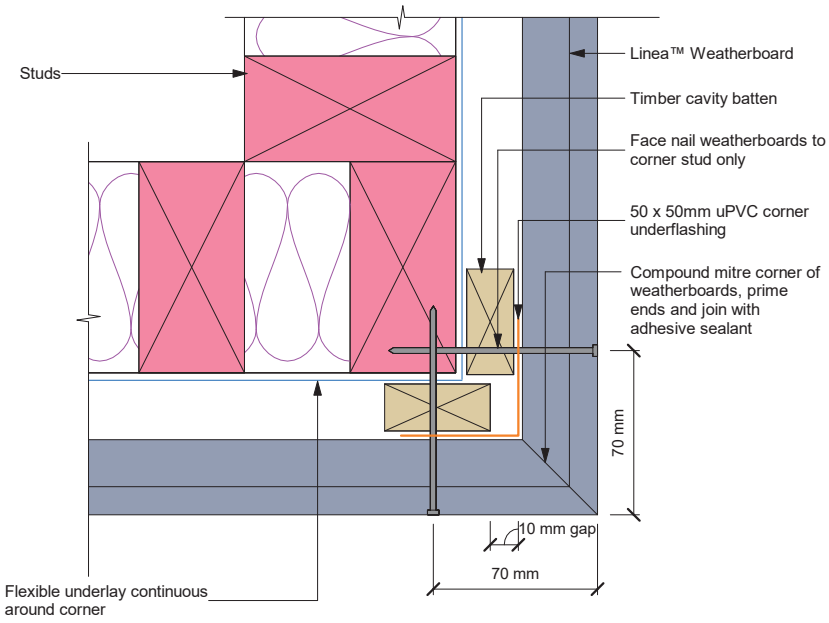

Note: Adhesive sealant must be used on the full end face of both weatherboards. Push lightly together

Figure 11: Internal 90 ° aluminium ‘W’ mould corner

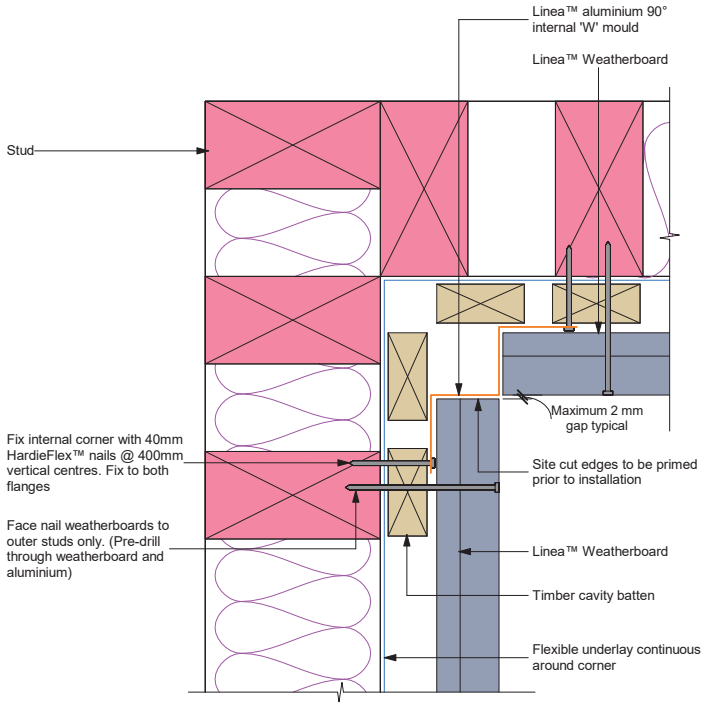

ABA20220988
APPROVED - Site Copy
Hastings District Council
20/09/2022

Figure 12: Internal 135 º aluminium ‘W’ mould corner

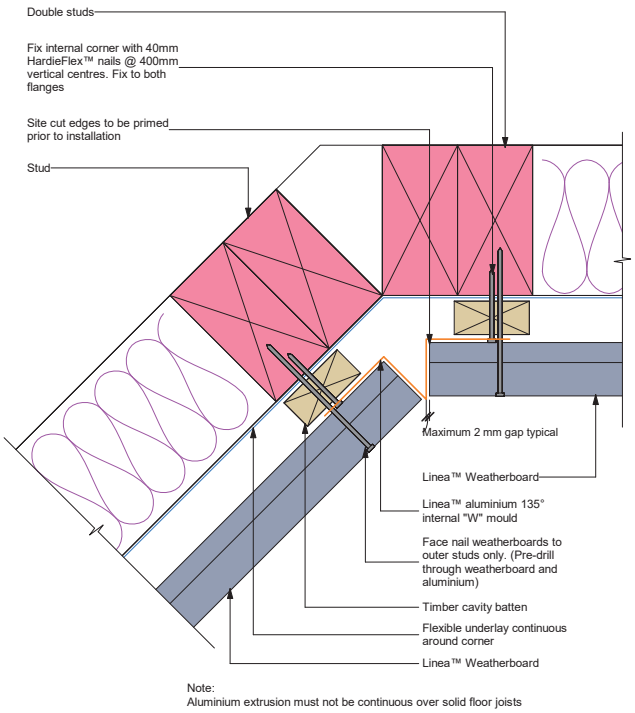

Note:
Aluminium extrusion must not be continuous over solid floor joists

Figure 13: Internal corner joint flashing

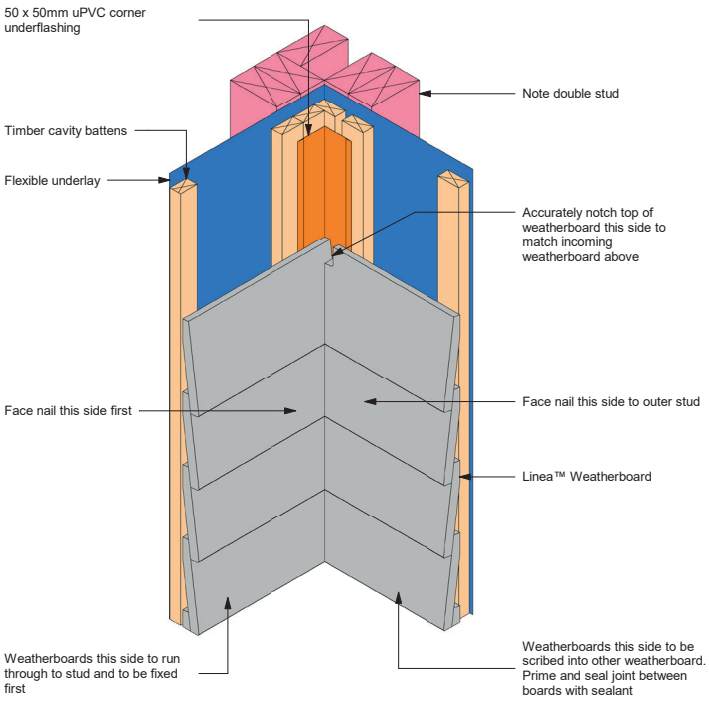

ABA20220988
APPROVED - Site Copy
Hastings District Council
20/09/2022

Figure 14: Wall to soffit junction 'X'

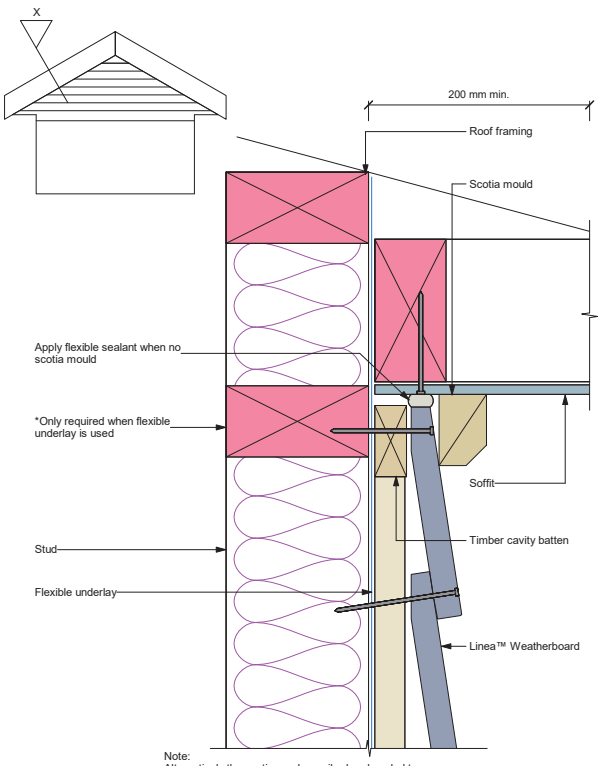

Note:
Alternatively the scotia can be scribed and sealed to Linea™ Weatherboard and the soffit lining

For soffits more than 200mm the Linea™ Weatherboard can be neat cut and silicone sealed to angle of soffit

Figure 15: Nil soffit detail

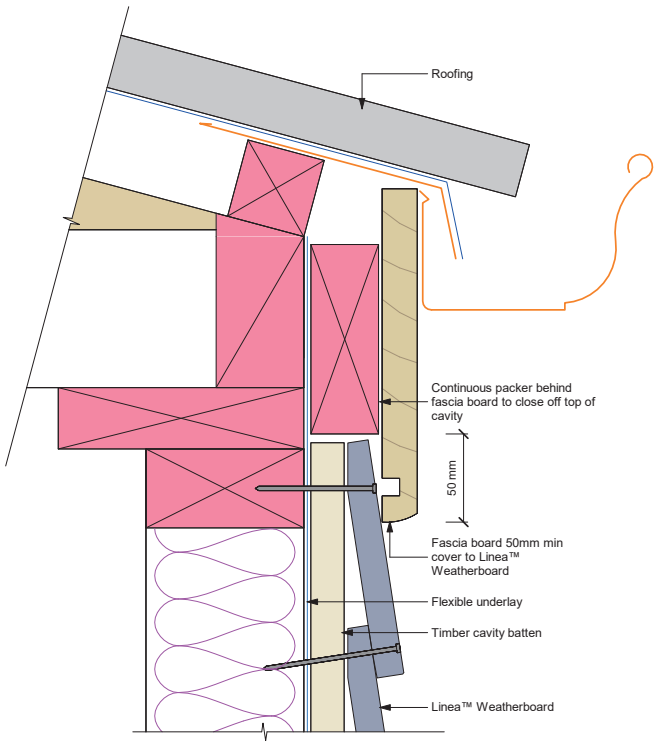

ABA20220988
APPROVED - Site Copy
Hastings District Council
20/09/2022

Figure 16: Sloping soffit and wall junction

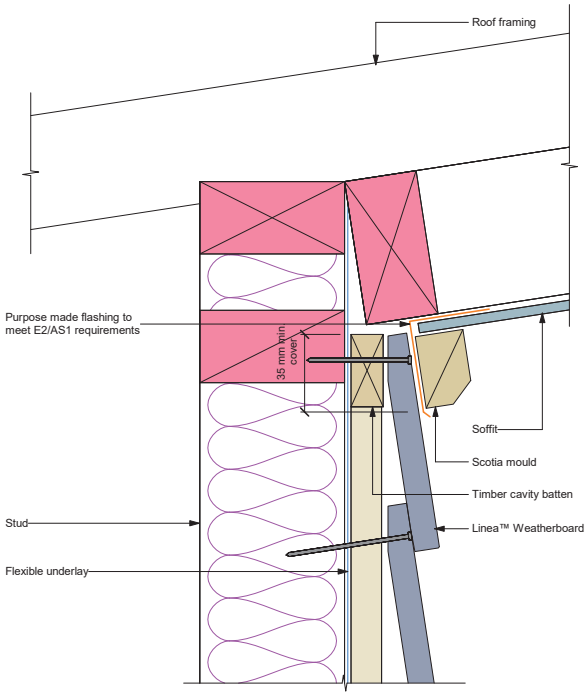

Note: Site cut edges to be primed

Figure 17: Window and door sill

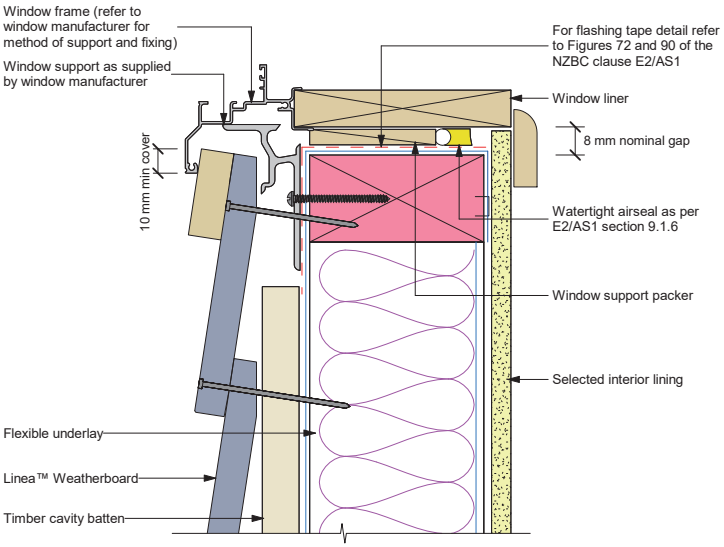

General notes for materials selection
1. Flashing materials must be selected based on environmental exposure, refer to NZS 3604 and Table 20 of NZBC E2/AS1
2. Flexible underlay must comply with acceptable solution E2/AS1
3. Flashing tape must have proven compatibility with the selected flexible underlay and other materials with which it comes into contact

Refer to the manufacturer or supplier for technical information for these materials

ABA20220988
APPROVED - Site Copy
Hastings District Council
20/09/2022

Figure 18: Window head

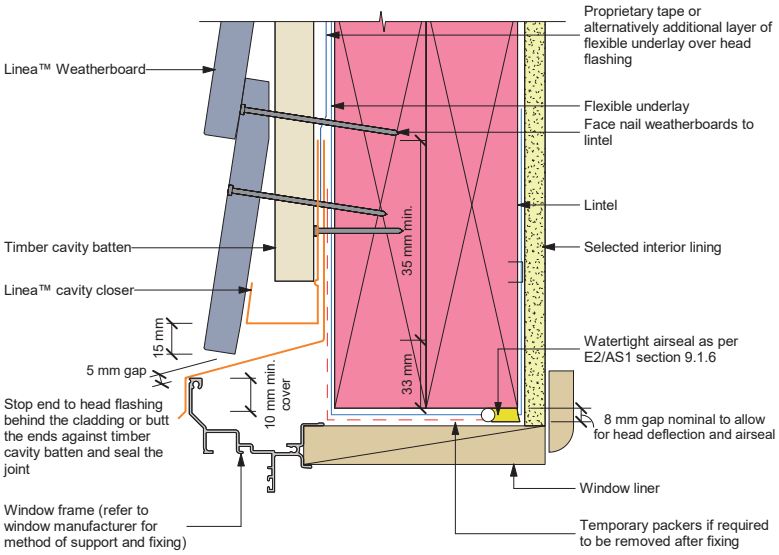

Note:
- Sealant must be installed between head flashing and window flange in VH and EH wind zones and SED pressures
- Alternatively, the head flashings can be formed with stop ends as per E2/AS1
- Refer to Figure 22 for sealing end battens to head flashing
- Site cut edges to be primed

Figure 19: Window jamb

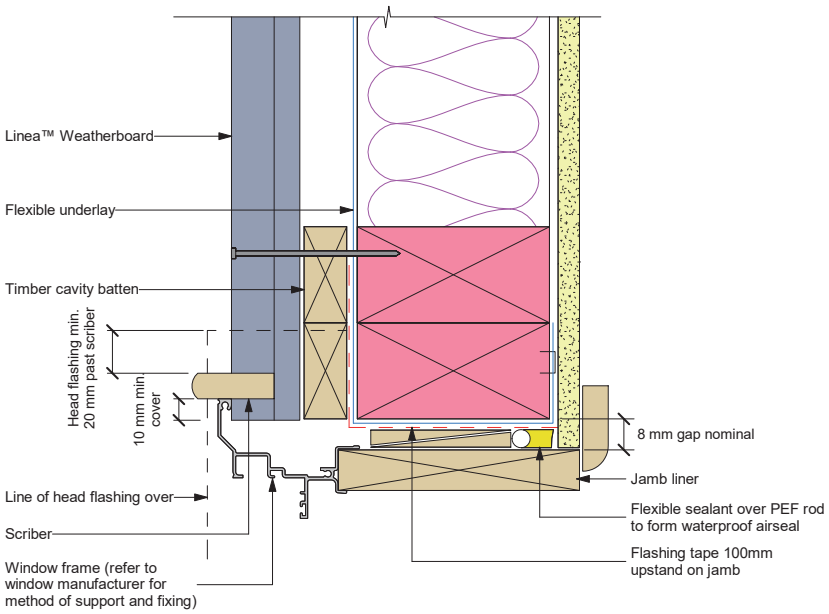

ABA20220988
APPROVED - Site Copy
Hastings District Council
20/09/2022

Figure 20: Window head stop end

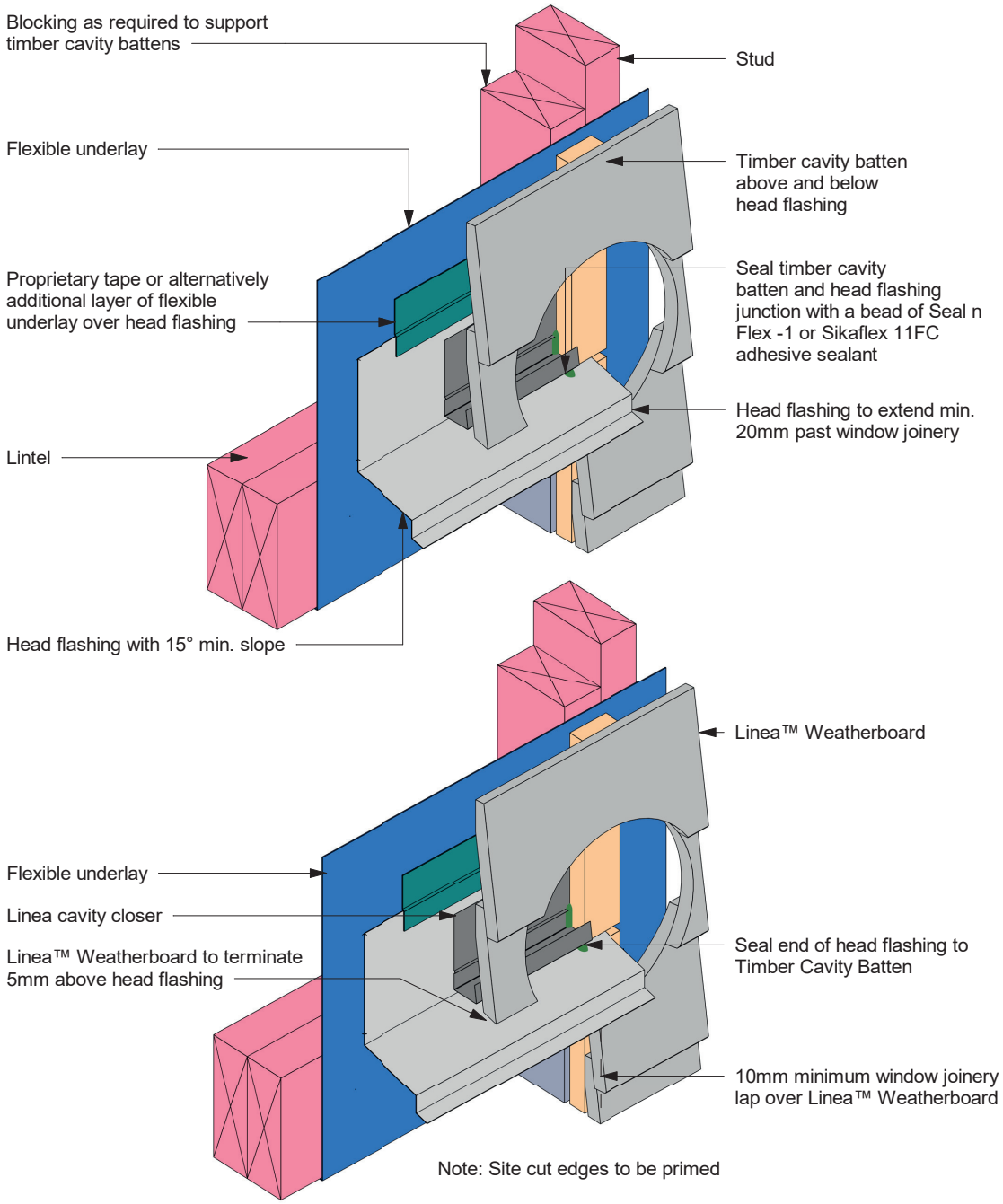

Note: Site cut edges to be primed

ABA20220988
APPROVED - Site Copy
Hastings District Council
20/09/2022

Figure 21: Window sill with facing

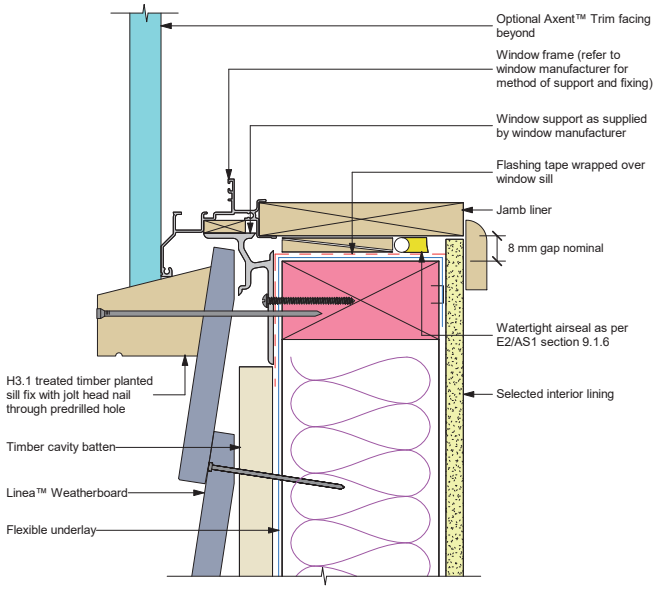

General notes for materials selection
1. Flashing materials must be selected based on environmental exposure, refer to NZS 3604 and Table 20 of NZBC E2/AS1
2. Flexible underlay must comply with acceptable solution E2/AS1
3. Flashing tape must have proven compatibility with the selected flexible underlay and other materials with which it comes into contact

Refer to the manufacturer or supplier for technical information for these materials

Figure 22: Window head with facings

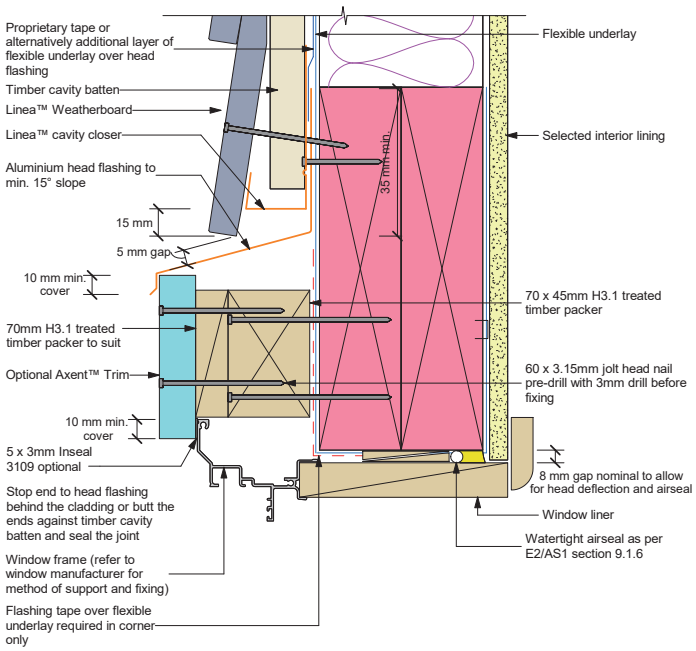

Note:
- Sealant must be installed between head flashing and window flange in VH and EH wind zones and SED pressures
- Alternatively, the head flashings can be formed with stop ends as per E2/AS1
- Refer to Figure 22 for sealing end battens to head flashing

ABA20220988
APPROVED - Site Copy
Hastings District Council
20/09/2022

Figure 23: Window jamb with facings

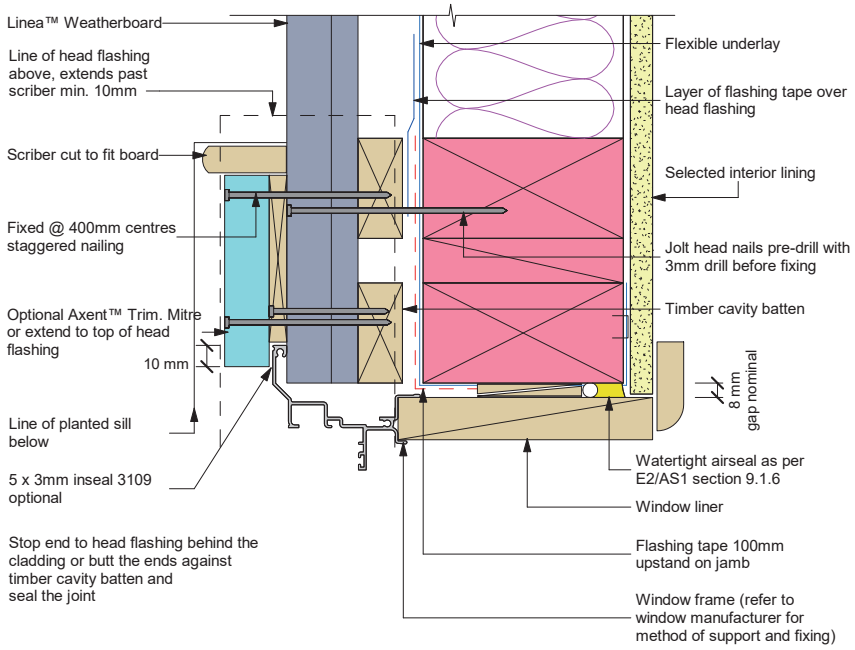

Note:
- Site cut edges to be primed

Figure 24: Door sill support detail

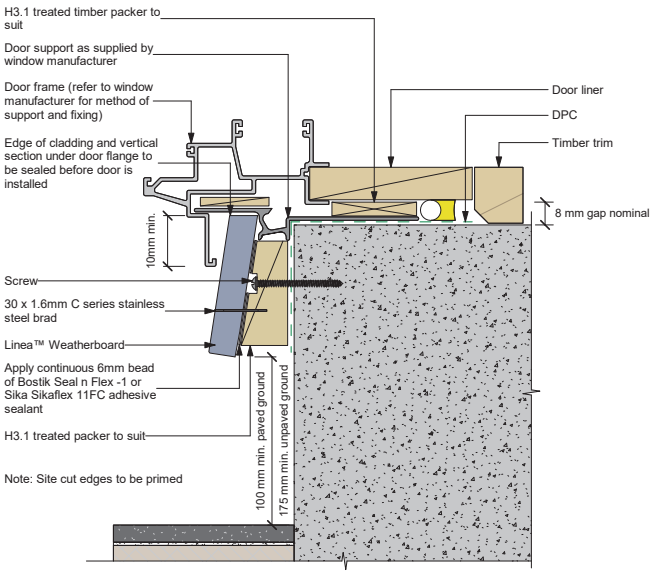

Refer to the manufacturer or supplier for technical information for these materials

General notes for materials selection
1. Flashing materials must be selected based on environmental exposure, refer to NZS 3604 and Table 20 of the NZBC E2/AS1
2. Flexible underlay must comply with acceptable solution E2/AS1
3. Flashing tape must have proven compatibility with the selected flexible underlay and other materials with which it comes into contact
4. Linea™ Weatherboard to have sealed butt joint over batten at each corner of opening

ABA20220988
APPROVED - Site Copy
Hastings District Council
20/09/2022

Figure 25: Pipe penetration

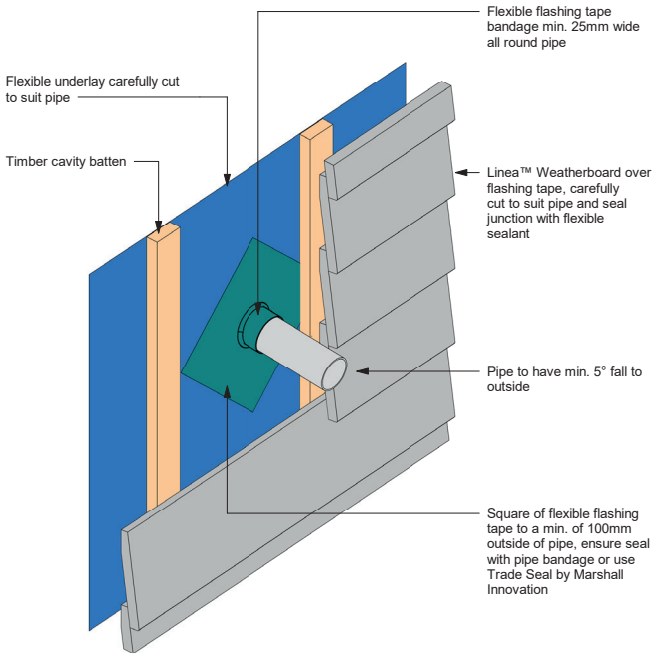

Note: Site cut edges to be primed

Figure 26: Continous cladding over joist

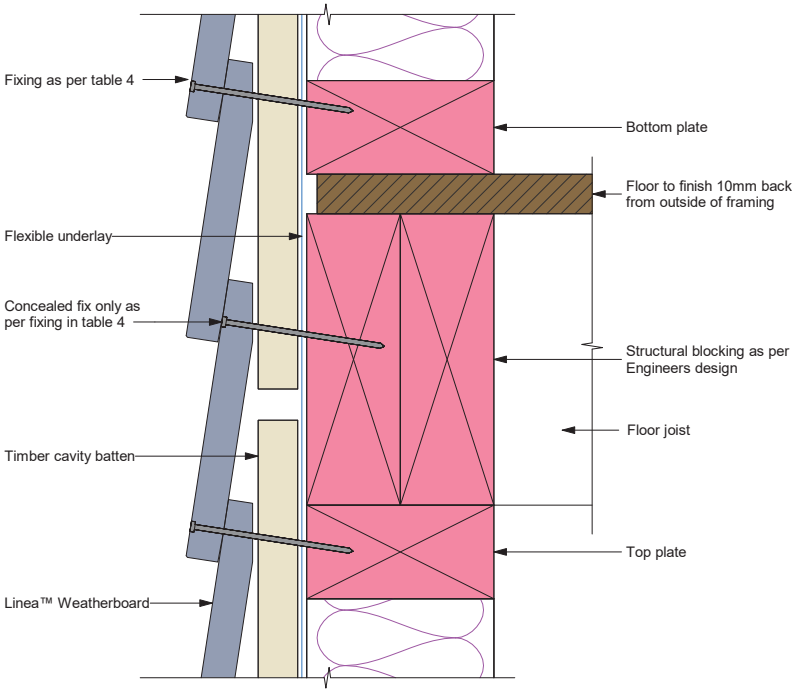

ABA20220988
APPROVED - Site Copy
Hastings District Council
20/09/2022

Figure 27: Drained flashing joint at floor level

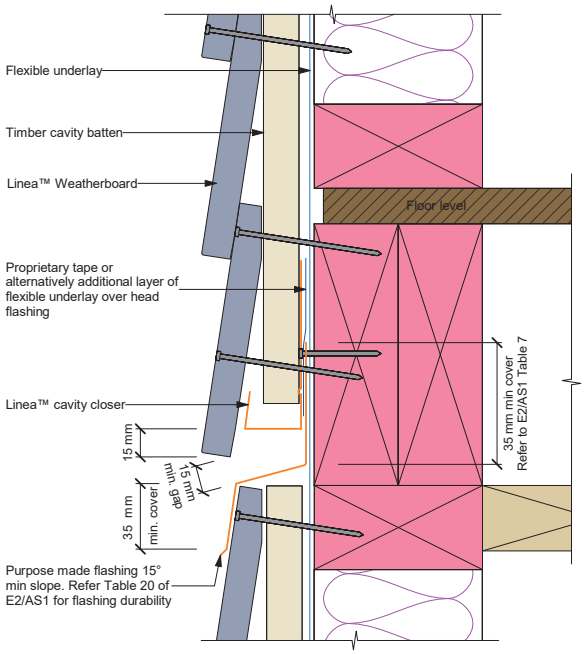

Note:
This detail is required to limit cavities to a maximum of 2 stories or 7 metres. Refer E2/AS1 clause 9.1.9.4.

Figure 28: Timber deck junction

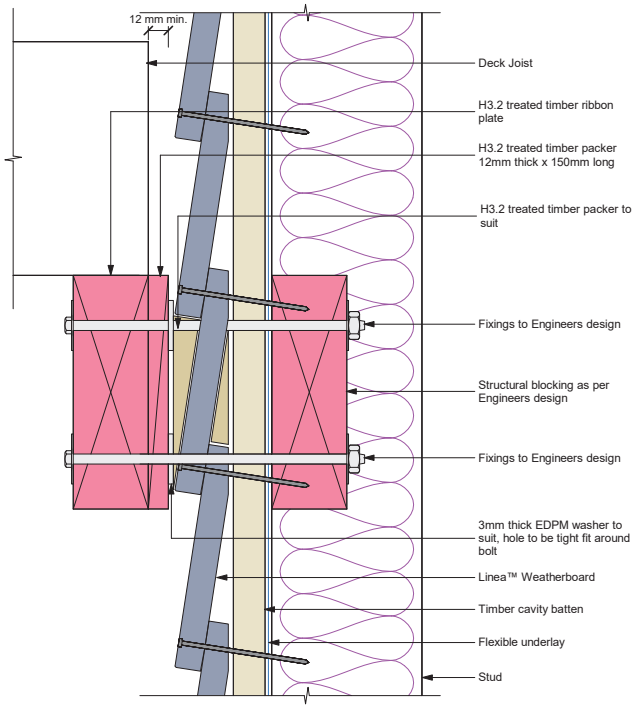

ABA20220988
APPROVED - Site Copy
Hastings District Council
20/09/2022

Figure 29: One piece apron flashing joint

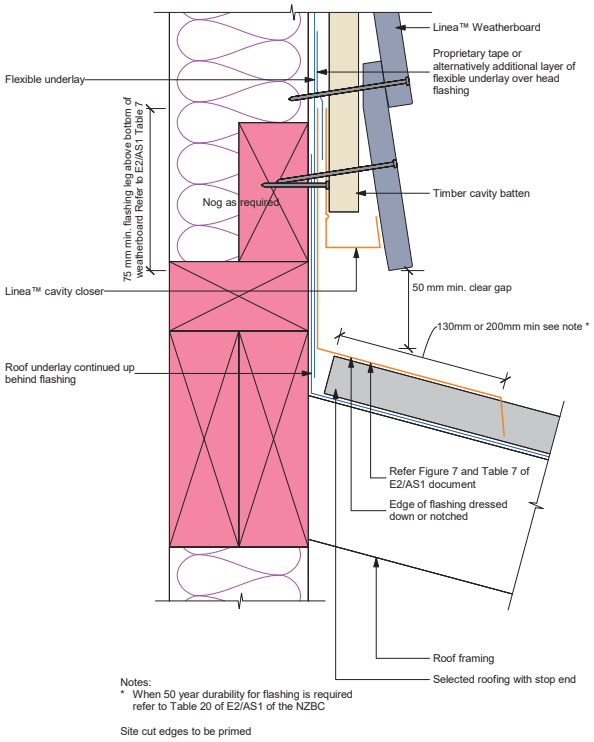

Notes:
* When 50 year durability for flashing is required refer to Table 20 of E2/AS1 of the NZBC

Site cut edges to be primed

Figure 30: Roof to wall junction detail

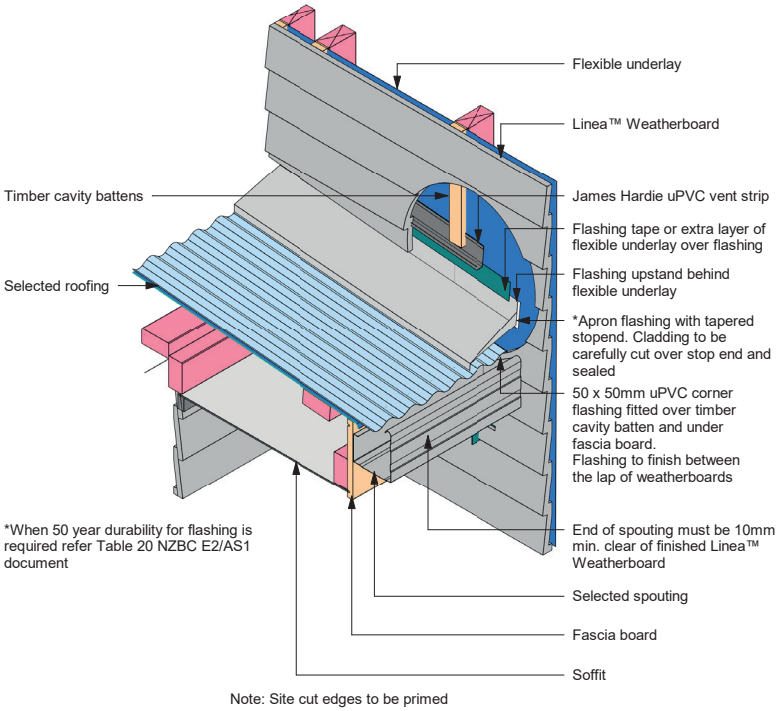

Note: Site cut edges to be primed

ABA20220988
APPROVED - Site Copy
Hastings District Council
20/09/2022

Figure 31: Parapet flashing

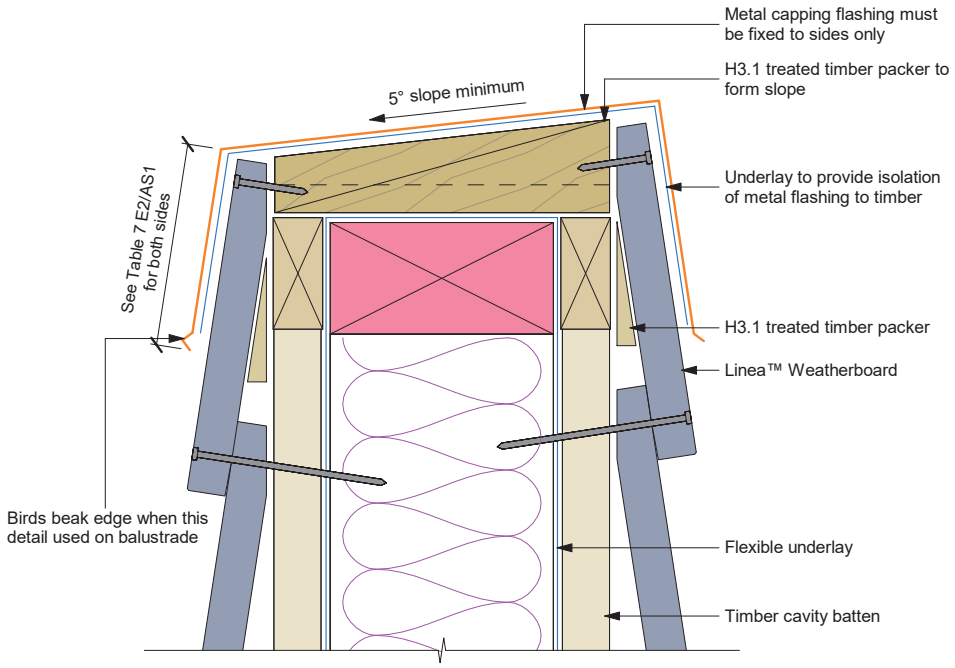

Figure 32: Enclosed deck balustrade to wall

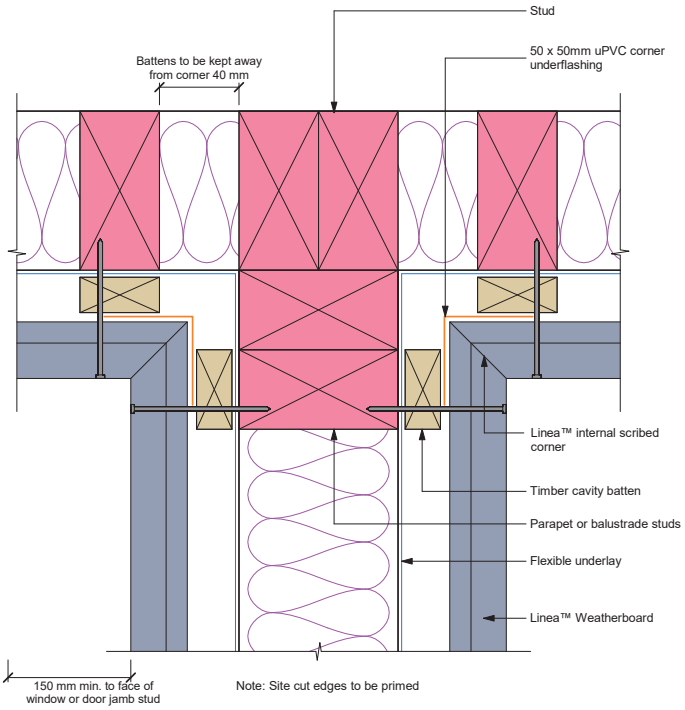

ABA20220988
APPROVED - Site Copy
Hastings District Council
20/09/2022

Figure 33: Enclosed balustrade to wall

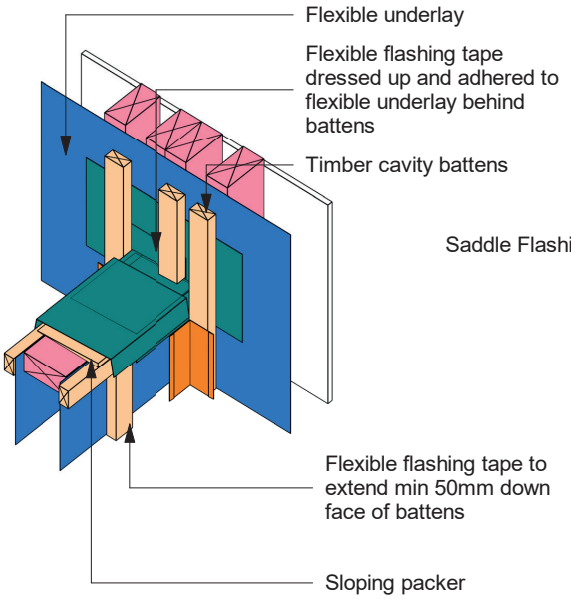

Batten and Flashing Tape Application Prior to Metal Flashing Fixing

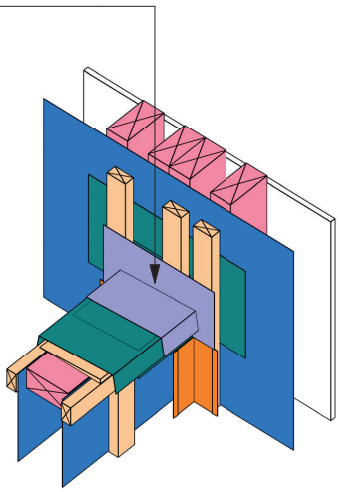

Saddle Flashing Application Prior to Cladding and Cap Flashing Fixing

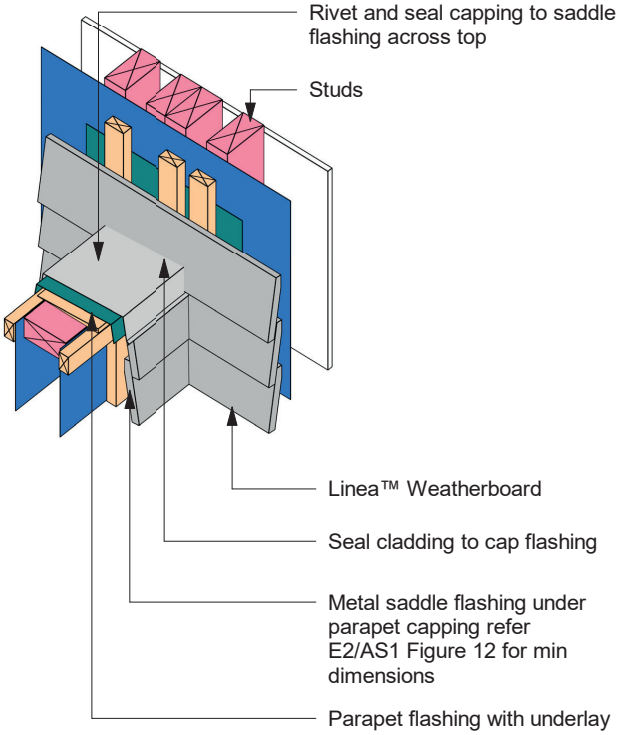

ABA20220988
APPROVED - Site Copy
Hastings District Council
20/09/2022

Figure 34: Junction Linea™ Weatherboard and fascia board

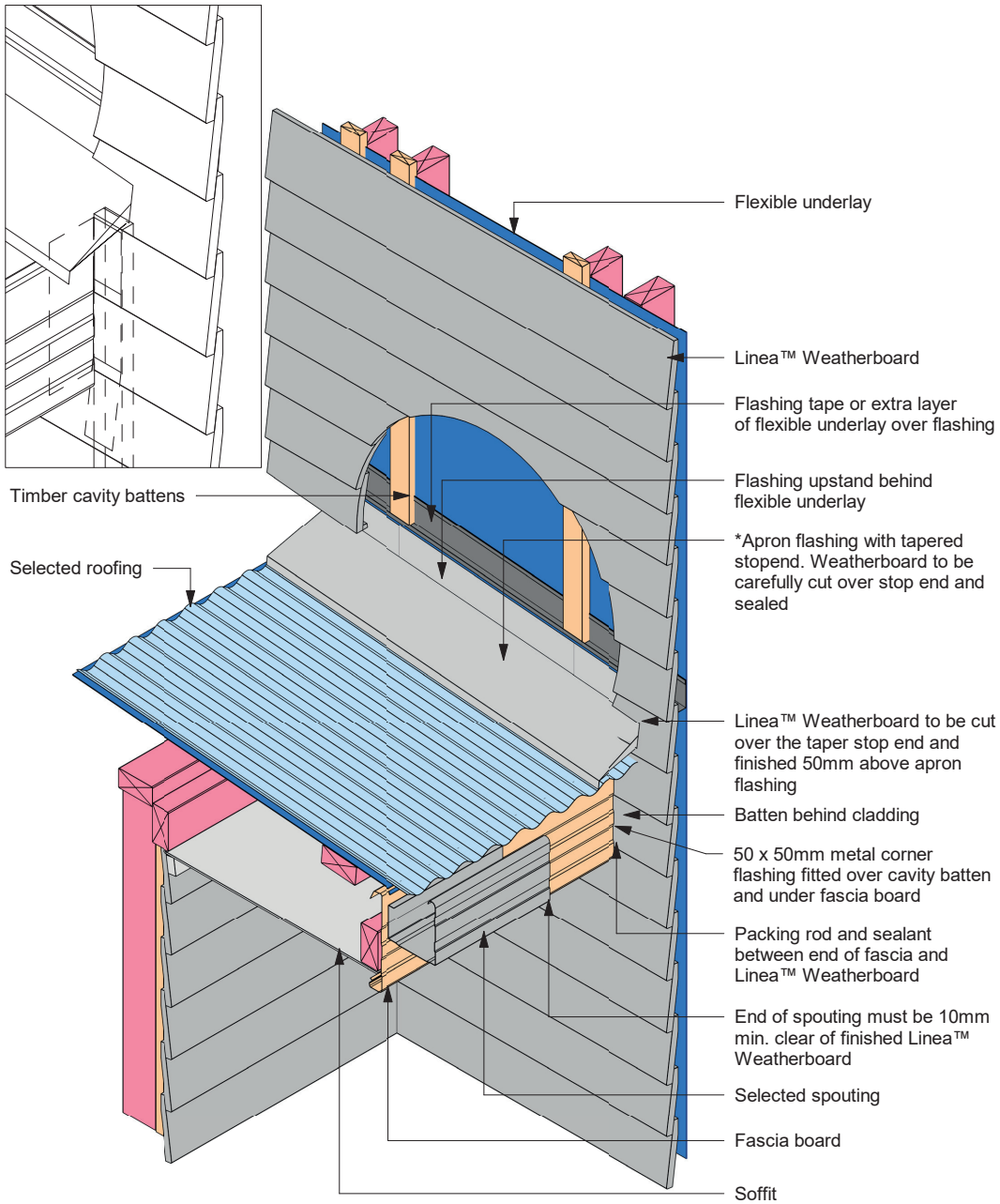

*When 50 year durability for flashing is required refer Table 20 NZBC E2/AS1 document

Note: Site cut edges to be primed

ABA20220988
APPROVED - Site Copy
Hastings District Council
20/09/2022

Figure 35: Enclosed roof to wall intersection

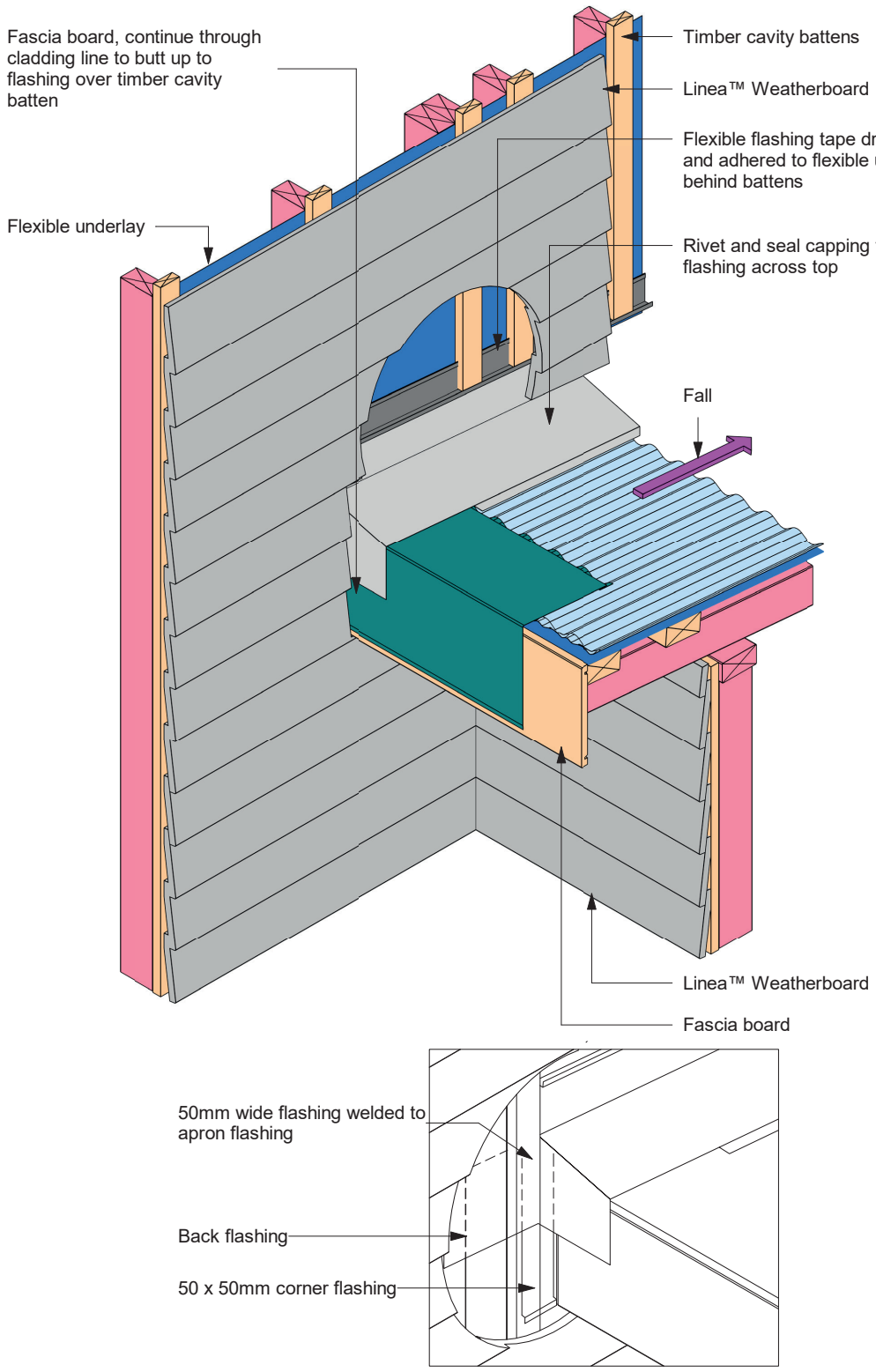

ABA20220988
APPROVED - Site Copy
Hastings District Council
20/09/2022

Figure 36: Garage door head

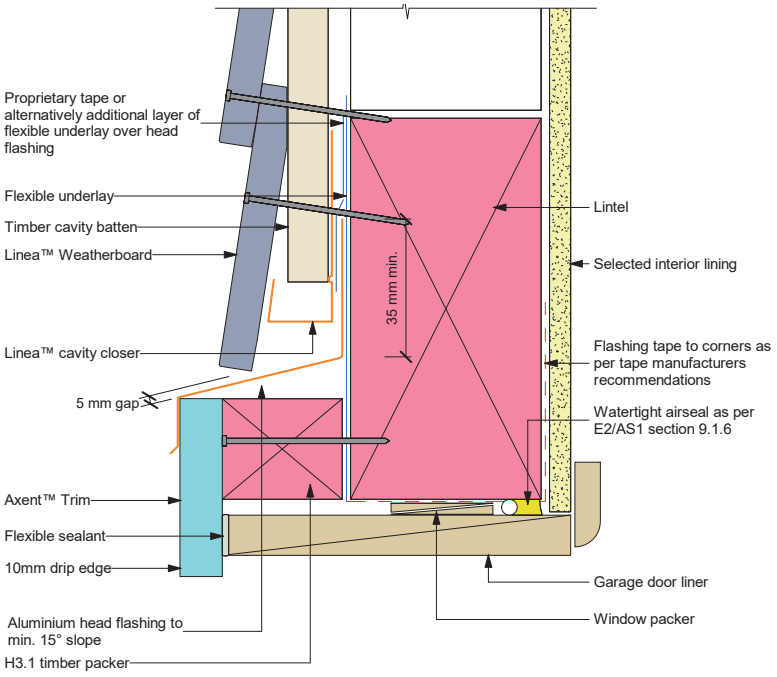

Note:
- Sealant must be applied between head flashing and liner in VH and EH wind zones and SED wind pressures
- Site cut edges to be primed

Figure 37: Garage door jamb

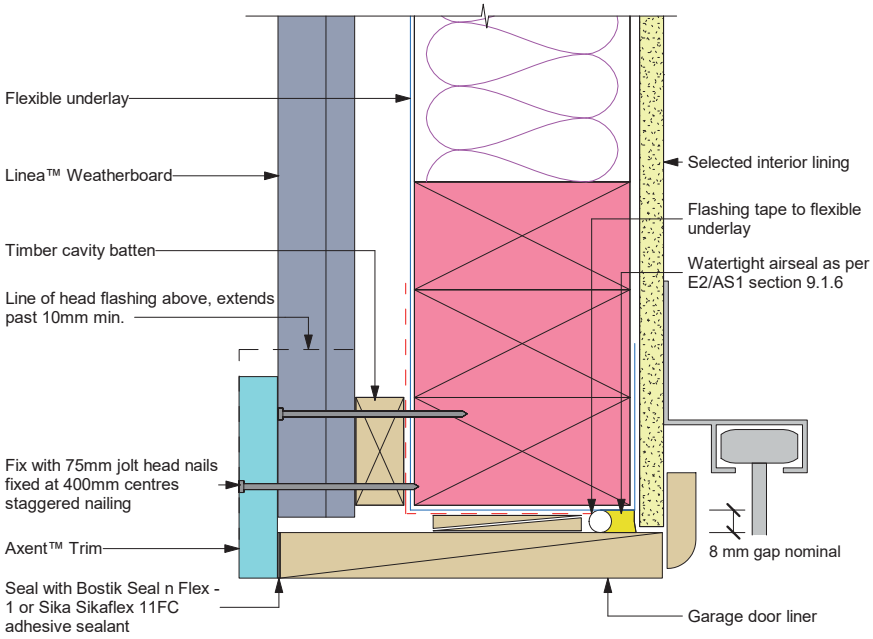

Note: Site cut edges to be primed

ABA20220988
APPROVED - Site Copy
Hastings District Council
20/09/2022

Figure 38: Framing setout building height over 10m



ABA20220988
APPROVED - Site Copy
Hastings District Council
20/09/2022

Figure 39: Intertenancy vertical fire separation

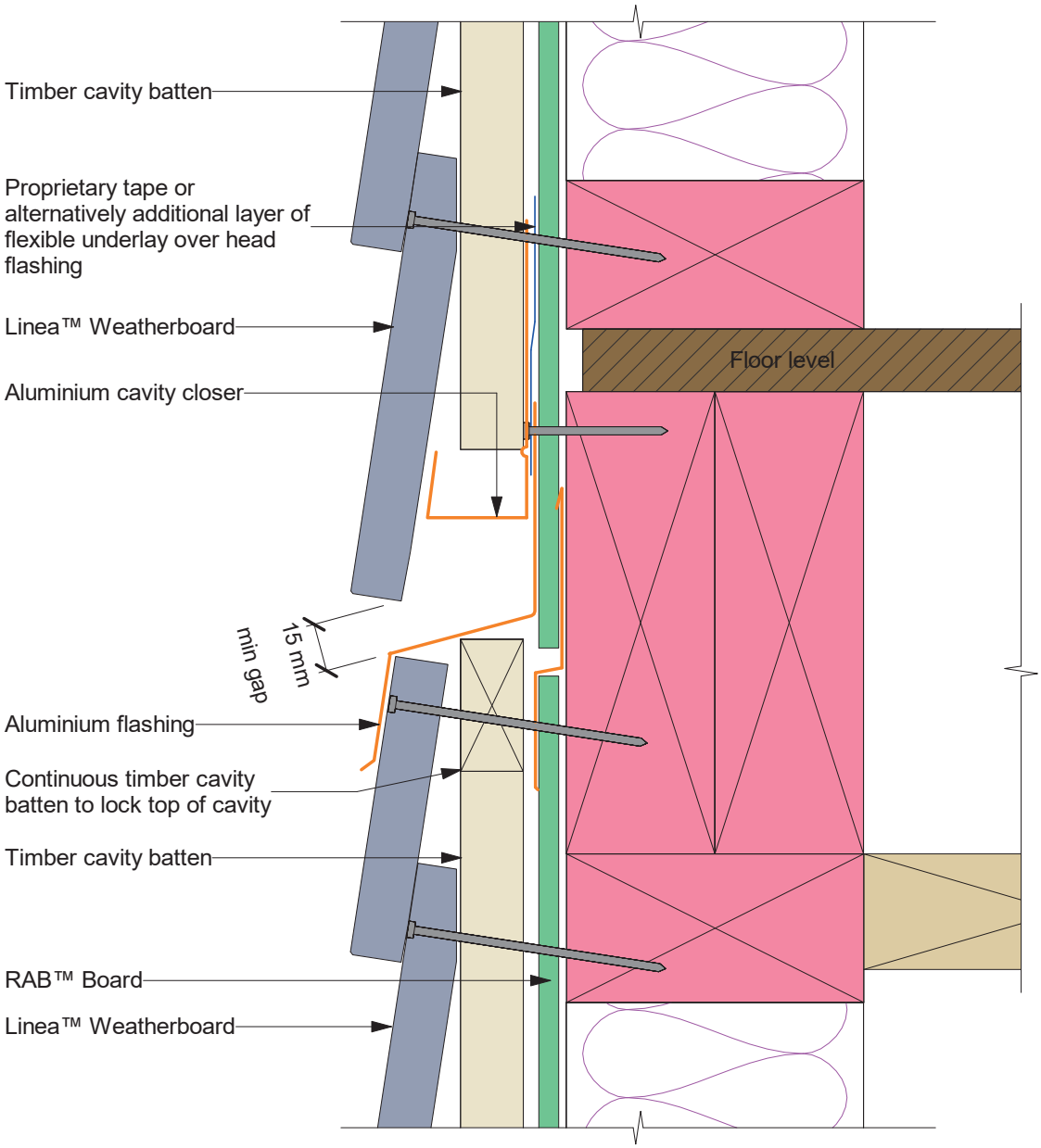

ABA20220988
APPROVED - Site Copy
Hastings District Council
20/09/2022

Notes

ABA20220988
APPROVED - Site Copy
Hastings District Council
20/09/2022

Notes

ABA20220988
APPROVED - Site Copy
Hastings District Council
20/09/2022

Notes

ABA20220988
APPROVED - Site Copy
Hastings District Council
20/09/2022

Linea™ WEATHERBOARD

Product Warranty

James Hardie New Zealand Limited ("James Hardie") warrants for a period of 25 years from the date of purchase that the Linea™ Weatherboard (the "Product"), will be free from defects due to defective factory workmanship or materials and, subject to compliance with the conditions below, will be resistant to cracking, rotting, fire and damage from termite attacks to the extent set out in James Hardie's relevant published literature current at the time of installation. James Hardie warrants for a period of 15 years from the date of purchase that the Axent™ Trim and accessories supplied by James Hardie will be free from defects due to defective factory workmanship or materials.

Nothing in this document shall exclude or modify any legal rights a customer may have under the Consumer Guarantees Act or otherwise which cannot be excluded or modified at law.

CONDITIONS OF WARRANTY:

The warranty is strictly subject to the following conditions:

a) James Hardie will not be liable for breach of warranty unless the claimant provides proof of purchase and makes a written claim either within 30 days after the defect would have become reasonably apparent or, if the defect was reasonably apparent prior to installation, then the claim must be made prior to installation.

b) This warranty is not transferable.

c) The Product must be installed and maintained strictly in accordance with the relevant James Hardie literature current at the time of installation and must be installed in conjunction with the components or products specified in the literature. Further, all other products, including coating and jointing systems, applied to or used in conjunction with the Product must be applied or installed and maintained strictly in accordance with the relevant manufacturer's instructions and good trade practice.

d) The project must be designed and constructed in strict compliance with all relevant provisions of the current New Zealand Building Code ("The NZBC"), regulations and standards.

e) The claimant's sole remedy for breach of warranty is (at James Hardie's option) that James Hardie will either supply replacement product, rectify the affected product or pay for the cost of the replacement or rectification of the affected product.

f) James Hardie will not be liable for any losses or damages (whether direct or indirect) including property damage or personal injury, consequential loss, economic loss or loss of profits, arising in contract or negligence or howsoever arising. Without limiting the foregoing James Hardie will not be liable for any claims, damages or defects arising from or in any way attributable to poor workmanship, poor design or detailing, settlement or structural movement and/or movement of materials to which the Product is attached, incorrect design of the structure, acts of God including but not limited to earthquakes, cyclones, floods or other severe weather conditions or unusual climatic conditions, efflorescence or performance of paint/coatings applied to the Product, normal wear and tear, growth of mould, mildew, fungi, bacteria, or any organism on any Product surface or Product (whether on the exposed or unexposed surfaces).

g) All warranties, conditions, liabilities and obligations other than those specified in this warranty are excluded to the fullest extent allowed by law.

h) If meeting a claim under this warranty involves re-coating of Products, there may be slight colour differences between the original and replacement Products due to the effects of weathering and variations in materials over time.

Disclaimer: The recommendations in James Hardie's literature are based on good building practice, but are not an exhaustive statement of all relevant information and are subject to conditions (c), (d), (f) and (g) above. James Hardie has tested the performance of Linea™ Weatherboard when installed in accordance with the appropriate Linea Weatherboard (cavity or direct fixed) technical specifications, in accordance with the standards and verification methods required by the NZBC and those test results demonstrate the product complies with the performance criteria established by the NZBC. However, as the successful performance of the relevant system depends on numerous factors outside the control of James Hardie (e.g. quality of workmanship and design) James Hardie shall not be liable for the recommendations made in its literature and the performance of the relevant system, including its suitability for any purpose or ability to satisfy the relevant provisions of the NZBC, regulations and standards, as it is the responsibility of the building designer to ensure that the details and recommendations provided in the relevant James Hardie installation manual are suitable for the intended project and that specific design is conducted where appropriate.

Copyright 2020. © James Hardie New Zealand Limited. TM and ® denotes a Trademark or Registered Mark owned by James Hardie Technology Limited.

ABA20220988
APPROVED - Site Copy
Hastings District Council
20/09/2022

Linea™

WEATHERBOARD



JamesHardie™

Ask James Hardie™ | Call 0800 808 868 | jameshardie.co.nz

Copyright 2020. © James Hardie New Zealand Limited. TM and ® denotes a Trademark or Registered Mark owned by James Hardie Technology Limited.

ABA20220988
APPROVED - Site Copy
Hastings District Council
20/09/2022

Linea™ WEATHERBOARD | JH™



Technical Specification

APRIL 2016 | NEW ZEALAND

ABA20220988
APPROVED - Site Copy
Hastings District Council
20/09/2022

Contents

1	**APPLICATION AND SCOPE**	**3**
1.1	Application	3
1.2	Scope	3
1.3	Details	3
1.4	Specific Design	3
2	**DESIGN**	**3**
2.1	Compliance	3
2.2	Responsibility	3
2.3	Site and Foundation	3
2.4	Surface Clearances	4
2.5	Moisture Management	4
2.6	Structure	4
2.7	Wind Loading	4
2.8	Structural Bracing	4
2.9	Fire Rated Walls	4
2.10	Energy Efficiency	4
3	**FRAMING**	**5**
3.1	General	5
3.2	Timber Grade	5
3.3	Durability	5
3.4	Frame Construction	5
3.5	Tolerances	5
4	**PREPARATION**	**6**
4.1	Flexible Underlay or HomeRAB Pre-Cladding	6
4.2	Rigid Air Barrier	6
4.3	Flashing	6
4.4	Vent Strip	6
4.5	Cavity Battens	6
4.6	Intermediate Support	6
4.7	Corners	6
4.8	Junctions and Penetrations	6
5	**FIXING LINEA™ WEATHERBOARD**	**7**
5.1	General	7
5.2	Fastener Durability	7
5.3	Nail Sizes and Fixing Method	7
5.4	Gun Nailing	8
6	**JOINTING**	**8**
7	**FINISHING**	**8**
7.1	Preparation and Priming	8
7.2	Sealants	8
7.3	Painting	8
8	**STORAGE AND HANDLING**	**8**
9	**MAINTENANCE**	**9**
10	**PRODUCT INFORMATION**	**9**
10.1	Manufacturing and Classification	9
10.2	Trim	9
10.3	Durability	9
10.4	Product Sizes and Mass	9
10.5	Size and Weight	9
11	**SAFE WORKING PRACTICES**	**10**
12	**PRODUCT SIZES**	**11**
13	**ACCESSORIES**	**12**
14	**DETAILS**	**14**
	PRODUCT WARRANTY	**51**

WE VALUE YOUR FEEDBACK

To continue with the development of our products and systems, we value your input. Please send any suggestions, including your name, contact details, and relevant sketches to:

Ask James Hardie™
Fax 0800 808 988
literaturefeedback@jameshardie.co.nz

CodeMark 30018

ABA20220988
APPROVED - Site Copy
Hastings District Council
20/09/2022

1 Application and scope

1.1 APPLICATION

Linea™ Weatherboard is a 16mm thick, pre-primed bevel back fibre cement weatherboard and is classified as lightweight wall cladding suitable for residential and light commercial construction using timber framed external walls. Linea Weatherboard is available in 135mm, 150mm and 180mm widths.

James Hardie also has available:

- Axent™ Fascia in two widths. Axent Fascia is a 16mm thick, pre-primed fibre cement product designed to accommodate James Hardie soffit linings.
- Axent™ Trim comes in a variety of widths for use as decorative trims around openings and external corners. Axent Trim is a 16mm thick, pre-primed fibre cement product.

Specifier

If you are a specifier or other responsible party for a project ensure that the information in this document is appropriate for the application you are planning and that you undertake specific design and detailing for areas which fall outside the scope of these specifications.

Installer

If you are an installer ensure that you follow the design, moisture management principles, associated figures and material selection provided by the designer and this James Hardie Technical Specification.
All the details provided in this document must be read in conjunction with the specifiers specification.

Make sure your information is up to date

When specifying or installing James Hardie products, ensure you have the current manual. If you're not sure you do, or, if you need more information, visit www.jameshardie.co.nz or Ask James Hardie on 0800 808 868.

1.2 SCOPE

This specification covers the use of Linea Weatherboard on buildings that fall within the scope limitations of the New Zealand Building Code (The NZBC) Acceptable Solution E2/AS1, Paragraph 1.1.

This specification includes the use of Linea Weatherboard in both direct to stud and cavity construction method and must be read in conjunction with the current BRANZ Appraisals for Linea Weatherboard.

This specification also covers the use of Linea Weatherboard in cavity construction for specific design projects (SED) subject to a wind pressure of 2.5kPa (ULS) maximum. This document is intended for use by architects, designers, specifiers or builders who are involved in specifying Linea Weatherboard. The document also serves the purpose of an installation manual for this product.

1.3 DETAILS

Various Linea Weatherboard details are provided in the Details section of this document. This specification and details in CAD file are also available to download from our website at www.jameshardie.co.nz.

1.4 SPECIFIC DESIGN

For use of Linea Weatherboard outside this published scope, the architect, designer or engineer must undertake specific design.

For advice on designs outside the scope of this specification, Ask James Hardie on 0800 808 868.

2 Design

2.1 COMPLIANCE

CodeMark 30018

Linea Weatherboard direct fixed and cavity cladding has been issued a CodeMark certificate number GM-10-30018 which confirms Linea Weatherboard is deemed to comply with the requirements of the NZBC. Please refer to our website www.jameshardie.co.nz for a copy of the CodeMark certificate. Linea Weatherboard also has a BRANZ Appraisal number 446 (2010) and 447 (2010) at www.branz.co.nz or www.jameshardie.co.nz.

2.2 RESPONSIBILITY

The specifier or other party responsible for the project must ensure that the information and details in this specification are appropriate for the intended application and that additional detailing is performed for specific design or any areas that fall outside the scope of this technical specification. For applications outside the scope of this literature and figures which are not provided herein, the architect, designer or engineer must undertake specific design and it should be ensured that the intent of their design meets the requirements of the NZBC.

All dimensions shown are in millimetres unless noted otherwise. All New Zealand Standards referenced in this manual are current edition and must be complied with.

James Hardie conducts stringent quality checks to ensure that any product manufactured falls within our quality spectrum. It is the responsibility of the builder to ensure that the product meets aesthetic requirements before installation. James Hardie will not be responsible for rectifying obvious aesthetic surface variations following installation.

2.3 SITE AND FOUNDATION

The site on which the building is situated must comply with the NZBC Acceptable Solution E1/AS1 'Surface Water'. Foundation design must comply with the requirements of NZS 3604 'Timber-framed Buildings' or be as per specific engineering design.
The grade of adjacent finished ground must slope away from the building to avoid any possibility of water accumulation in accordance with the NZBC requirements.

ABA20220988
APPROVED - Site Copy
Hastings District Council
20/09/2022

2.4 SURFACE CLEARANCES

The clearance between the bottom edge of cladding and paved/unpaved ground must comply with section 9.1.3 of E2/AS1. The finished floor level must also comply with these requirements. These clearances must be maintained throughout the life of the building.

Linea Weatherboards must overhang the bottom plate on a concrete slab by a minimum of 50mm as required by the NZBC Acceptable Solution, E2/AS1 Table 18.

On the roofs and decks the minimum clearance must be 50mm.

Do not install external cladding such that it may remain in contact with water or ground.

2.5 MOISTURE MANAGEMENT

It is the responsibility of the specifier to identify moisture related risks associated with any particular building design.

Wall construction design must effectively manage moisture, considering both the interior and exterior environments of the building, particularly in buildings that have a higher risk of wind driven rain penetration or that are artificially heated or cooled. Walls shall include those provisions as required by the NZBC Acceptable Solution E2/AS1 'External Moisture'. In addition, all wall openings, penetrations, junctions, connections, window sills, heads and jambs must incorporate appropriate flashings for waterproofing. The other materials, components and installation methods used to manage moisture in the walls, must comply with the requirements of relevant standards and the NZBC. For information in relation to designing for weathertightness, refer to BRANZ and the Ministry of Business Innovation & Employment (MBIE) updates on the following websites, respectively www.branz.co.nz and www.dbh.govt.nz.

2.6 STRUCTURE

Timber framing must comply with NZS 3604 for buildings or parts of buildings within the scope limitations of NZS 3604. Buildings or parts of buildings outside the scope of NZS 3604 must be to a specific engineering design in accordance with NZS 3603 and AS/NZS 1170. Where specific engineering design is required, the framing stiffness must be equivalent to or more than the framing provisions of NZS 3604. In all cases stud spacing must not exceed 600mm centres maximum for buildings designed to NZS 3604 and 400mm centres maximum for specific engineering design buildings subject to design wind pressures higher than 1.5kPa.

For timber frame walls longer than 12m, it is best practice to allow for construction joints to accommodate movements generated due to timber shrinkage or deflection etc

2.7 WIND LOADING

Linea Weatherboard cladding is suitable for use in all wind zones as defined in NZS 3604. It is also suitable for use in SED buildings exposed to wind pressures up to 2.5kPa (ULS).

For wind pressures higher than those mentioned above, contact James Hardie at 0800 808 868 for assistance.

2.8 STRUCTURAL BRACING

Linea Weatherboard direct fixed installed as per Linea Weatherboard specific bracing details will provide bracing for buildings designed and constructed in accordance with NZS 3604. The Linea Weatherboard bracing systems have been independently tested by SCION using direct fixed construction. The following range of bracings can be achieved

- Wind 75 – 130 BU'S/m
- Earthquake 67 – 101 BU'S/m

Refer to the James Hardie Bracing Design Manual for details.

2.9 FIRE RATED WALLS

Walls clad with Linea Weatherboard using a direct fix or cavity construction method can achieve fire ratings of up to 90/90/90 when constructed in accordance with the James Hardie 'Fire and Acoustic' Design Manual. Linea Weatherboard must be face fixed for Fire Rated applications.

Refer to Fire and Acoustic Design Manual for further information about fire rated systems.

2.10 ENERGY EFFICIENCY

External walls constructed as per this technical specification, using Linea Weatherboard and bulk insulation, where the area of glazing is 30% or less of the total wall area, complies with the minimum R-value requirements for walls as per the NZBC Acceptable Solution H1/AS1 (The NZBC Clause H1 Energy Efficiency), Replacement Table 1. To meet the minimum thermal insulation requirements for the construction, the bulk insulation as specified in Table 1 must be used. This insulation may be substituted with insulation material having higher R-values. Thermal insulation of a wall is affected when the depth of the timber framing is increased or decreased or stud spacing is decreased. The calculation used in Table 1 is based on a timber framing size 90 x 45mm and an internal lining material such as James Hardie Villaboard® Lining or a 10mm plasterboard.

Table 1

Insulation capability		
Climate Zone	**Construction R-Value Requirement**	**Minimum R-Value of Insulation Required**
1 and 2	1.9 m2 °C/W	#R2.0
3	2.0 m2 °C/W	#R2.2

ABA20220988
APPROVED - Site Copy
Hastings District Council
20/09/2022

Total construction R-Value depends on the insulation material used and the framing ratio. The insulation material R-Values specified in this table are for studs spaced at 600mm c/c and nogs spaced at 800mm c/c.

To achieve higher construction R-Values the wall insulation material must be replaced with an insulation material having higher R-Values to suit the requirements.

For further guidance on insulation requirement refer to current edition of 'House Insulation Guide' published by BRANZ.

3 Framing

3.1 GENERAL

This Linea Weatherboard technical specification is only suitable for timber-framed buildings. Other framing materials are outside the scope of this specification.

For Steel Framing refer to James Hardie Claddings Installation to Steel Framing Technical Supplement.

3.2 TIMBER GRADE

Timber must be graded in accordance with NZS 3631 'New Zealand Timber Grading Rules'. The timber grade to be used must be in accordance with NZS 3604 requirements.

3.3 DURABILITY

To comply with the NZBC requirements the external framing must be treated to a minimum H1.2 treatment. Refer to the NZBC Acceptable Solution B2/AS1 Durability for further information about the durability requirements. For timber treatment information refer to NZS 3602 (Timber and Wood-Based Products for use in Buildings) and NZS 3640 (Chemical Preservation of Round and Sawn Timber) for minimum timber treatment selection and treatment requirements. Also refer to framing manufacturer's literature for further guidance on timber selection.

Framing must be protected from moisture at sites in accordance with the recommendations of framing manufacturers.

Note: refer to NZS 3602 for information about the allowable moisture content in timber.

3.4 FRAME CONSTRUCTION

For buildings within the scope of NZS 3604 the framing sizes and set-out must comply with NZS 3604 with stud, nog/dwang centres as required by this specification.

In case of gable end trusses sitting on top plates of the external wall frame, the frame size must be in accordance with truss design and specification supplied by the frame and truss manufacturer/supplier supported by independent design producer statement.

3.4.1 Direct fixed construction method

The following framing must be provided for direct fixed construction method:

- Studs must be provided at 600mm centres maximum.
- Nogs must be provided at 1200mm centres maximum.
- Double studs are required at internal corners.
- Extra packers may be required at external corners.
- Extra studs are required for aluminium internal corner sections.

3.4.2 Cavity construction method

The following framing must be provided for cavity construction method:

- When studs are at 600mm centres the nogs must be provided at 800mm centres maximum.
- When studs are at 400mm centres the nogs may be provided at 1200mm centres maximum.
- Double studs are required at internal corners.
- Extra packers may be required at external corners.
- Extra studs are required for aluminium internal corner sections.

3.4.3 Specific Engineering Design (SED)

For EH wind zone and specific engineering design projects the timber framing is required to be designed in accordance with NZS 3603 and AS/NZS 1170. The minimum framing sizes and layout must comply with this specification.

- Stud spacing 400mm centres maximum
- Nog spacing 1200mm centres maximum
- Other requirements as per 3.5.2 above

3.5 TOLERANCES

In order to achieve an acceptable wall finish, it is imperative that framing is straight and true. Framing tolerances must comply with the requirements of NZS 3604 and the manufacturer's specifications. All framing must be made flush.

ABA20220988
APPROVED - Site Copy
Hastings District Council
20/09/2022

4 Preparation

4.1 FLEXIBLE UNDERLAY OR HOMERAB PRE-CLADDING

Flexible underlay must be provided as per the requirements of the NZBC Acceptable Solution E2/AS1 'External Moisture' Table 23. The flexible underlay must be fixed in accordance with E2/AS1 and the underlay manufacturer's recommendations. Walls which are not lined on the inside face (e.g. garage walls or gable ends) must include a rigid sheathing or an air barrier behind the cladding which complies with the requirements of the NZBC Acceptable Solution E2/AS1 Table 23. For attached garages, flexible underlays must be selected in accordance with the NZBC Acceptable Solution E2/AS1, Paragraph 9.1.3.4. HomeRAB Pre-Cladding is suitable for use in these applications. It must be installed in accordance with James Hardie Rigid Air Barriers installation manual.

4.2 RIGID AIR BARRIER

For EH wind zone or Specific Engineering Design (SED) projects where the design wind pressures are between 1.5kPa (ULS) and 2.5kPa (ULS), RAB Board (6mm) must be used. Refer to James Hardie Rigid Air Barriers installation manual for information regarding its installation.

4.3 FLASHING

All wall openings, penetrations, intersections, connections, window sills, heads and jambs must be flashed prior to weatherboard installation. Please refer to moisture management requirements in Clause 2.5. The flexible underlay must be appropriately incorporated with penetration and junction flashings. Materials must be lapped in such a way that water tracks down to the exterior on the face of flexible underlay. The selected flashing materials must comply with the durability requirements of Table 20 of the NZBC Acceptable Solution E2/AS1.

4.4 VENT STRIP

The James Hardie uPVC cavity vent strip must be installed at the bottom of all walls constructed using the drained and ventilated cavity construction method. James Hardie uPVC vent strip has an opening area of 1000mm2/m length. It is important that the openings in the vent strip are kept clear and unobstructed to allow free drainage and ventilation of cavities.

4.5 CAVITY BATTENS

Buildings with a risk score of 13-20 calculated in accordance with the NZBC Acceptable Solution E2/AS1 Table 3 require Linea Weatherboards to be installed on a cavity.

The cavity battens provide airspace between the frame and cladding and are considered a "packer" only in this specification.

The timber battens must be minimum H3.1 treated in accordance with NZS 3640 (Chemical Preservation of Round and Sawn Timber) to comply with the durability requirements of B2/AS1.

Cavity battens must comply with E2/AS1 and:

- be minimum 18mm thick.
- be minimum as wide as the width of studs.
- must be fixed by the cladding fixings to the main framing through the flexible underlay.
- fix cavity battens to studs at maximum 600mm centres.
- until claddings are fixed the battens need only to be tacked to framing with 40 x 2.8mm nails at 800mm centres maximum.

(Batten fixing is required temporarily to keep them straight on the wall during construction.)

4.6 INTERMEDIATE SUPPORT

Where studs are at 600mm centres an intermediate means of restraining the flexible underlay and insulation from bulging into the cavity must be installed. An acceptable method to achieve this is using one of the following:

- intermediate cavity batten between the studs; or
- 75mm galvanised mesh; or
- polypropylene tape at 300mm centres fixed horizontally and drawn taut.

No intermediate supports are required:

- where studs are at maximum 400mm centres; or,
- when rigid sheathings instead of flexible underlays are used.

4.7 CORNERS

Anticipated joist shrinkage must be allowed for in the design process. Do not run trims or aluminium extrusions continuously across solid floor joists. There are a number of options to select from when detailing external corners:

- 90° corner soaker in aluminium, copper or stainless steel. Refer to Figures 7 and 33.
- 135° corner soaker 180mm aluminium, contact James Hardie
- Box corners using Axent Trim. Refer to Figures 3, 4 and 30.
- Mitred corners to weatherboards. Refer to Figures 5 and 31.
- Aluminium boxed corners. Refer to Figures 6 and 32.

There are a number of options to select from when detailing internal corners:

- Scribed corner. Refer to Figures 8 and 34.
- 90° or 135° Aluminium W-mould. Refer to Figures 9, 10, 35 and 36.

4.8 JUNCTIONS AND PENETRATIONS

Refer to Clause 2.5 of this specification for moisture management requirements. All windows and doors must be detailed as per the requirements of this specification. James Hardie has developed the window details for Linea Weatherboards which meet the performance requirements of E2 'External Moisture', an approved document of the NZBC. Refer to Figures 11 to 22 and 38 to 51.

ABA20220988
APPROVED - Site Copy
Hastings District Council
20/09/2022

5 Fixing Linea Weatherboard

5.1 GENERAL

The horizontal lap of Linea Weatherboards must be 30mm minimum. In certain scenarios you may require to creep up the lap. This must not exceed 33mm. Linea Weatherboards must be kept dry whilst in storage prior to and during fixing. Cut ends which are exposed after installation or where sealant is applied to the boards such as slimline box corners, internal corners, mitred external corners etc, must be primed prior to installation. Dust and loose material must be removed before priming.

A minimum H3.1 treated timber cant strip must be provided to support the bottom board on the wall. Refer to Figure 1 and Figure 26.

5.2 FASTENER DURABILITY

Fasteners must meet the minimum durability requirements of the NZBC. NZS 3604 specifies the requirements for fixing's material to be used in relation to the exposure conditions and are summarised in Table 2.

Table 2

Exposure conditions and nail selection prescribed by NZS 3604

NAIL MATERIAL

Zone D *	Zone C outside sea spray zone and Zone B and Geothermal hot spots	Bracing — All zones
Grade 316 Stainless	Hot-dipped galvanised or 316 stainless	Grade 316 stainless

* (Zone C areas where local knowledge dictates that increased durability is required, appropriate selection shall be made) Microclimate conditions as detailed in NZS 3604, Paragraph 4.2.4 require SED.

Also refer to the NZBC Acceptable Solution 'E2/AS1' Table 20 and 21 for information regarding the selection of suitable fixing materials and their compatibility with other materials.

5.3 NAIL SIZE AND FIXING METHOD

Linea Weatherboards and Axent Trim must be fixed to timber with the types of nails specified in Tables 3 and 4, in accordance with the following requirements:

- Linea Weatherboard can either be face/exposed fixed or concealed fixed.
- Linea Weatherboard must be fixed into studs at maximum 600mm centres. Fixing centres to coincide with stud spacing. Refer to Figure 2 and 28.
- All concealed nails must be driven flush with the board surface.
- When concealed fixing Linea Weatherboards, nails must be driven under the lap of boards, except at all corners and vertical edges of openings where Linea Weatherboards must be face fixed. Refer to Figure 2 and Figure 29.
- Nails must be fixed 25mm from the end of the board when hand nailing. For gun nailing refer to Section 5.4.
- When using concealed fixing method, any gaps that may appear under the lap due to site conditions can be minimised by fixing a jolt head nail through the lap as per the exposed nailing method. Refer to Figure 2 and 29.
- When using concealed fixing method, Linea Weatherboard can also be tied together by face fixing through the lap using 32mm brad nails if desired.
- When face fixing Linea Weatherboard, the upper board must be pre-drilled before fixing with a jolt head nail.

Table 3

Nail requirements for Linea Weatherboards

DIRECT TO STUD FIXING UP TO AND INCLUDING VH WIND ZONE

Concealed Nailing over flexible underlay	
40 x 2.8mm HardieFlex™ nails	Finish flush with the board surface.
Face Nailing over flexible underlay	
60 x 3.15mm jolt head nails	Hot-dipped galvanised jolt head nail with pre-drilling* through the top weatherboard.
	Stainless steel jolt head nail with pre-drilling* through the top weatherboard.
Concealed Nailing over rigid air barrier	
50 x 2.8mm HardieFlex™ nails	Finish flush with the board surface.
Face Nailing over rigid air barrier	
75 x 3.15mm jolt head nails	Hot-dipped galvanised jolt head nail with pre-drilling* through the top weatherboard.
	Stainless steel jolt head nail with pre-drilling* through the top weatherboard.

CAVITY FIXING UP TO AND INCLUDING VH WIND ZONE

Concealed Nailing over flexible underlay	
60 x 3.15mm HardieFlex™ nails	Finish flush with the board surface.
Face Nailing over flexible underlay	
75 x 3.15mm jolt head nails	Hot-dipped galvanised jolt head nail with pre-drilling* through the top weatherboard.
	Stainless steel jolt head nail with pre-drilling* through the top weatherboard.
Concealed Nailing over rigid air barrier	
75 x 3.15mm HardieFlex™ nails	Finish flush with the board surface.
Face Nailing over rigid air barrier	
90 x 4.0mm jolt head nails	Hot-dipped galvanised jolt head nail with pre-drilling* through the top weatherboard.
	Stainless steel jolt head nail with pre-drilling* through the top weatherboard.

CAVITY FIXING EH WIND ZONE AND SED PROJECTS (1.5KPA - 2.5KPA WIND PRESSURE)

Face Nailing	
90 x 4.0mm jolt head nail	Hot-dipped galvanised jolt head nail with pre-drilling** through the top weatherboard.
	Stainless steel shank jolt head nail with pre-drilling** through the top weatherboard.

ABA20220988
APPROVED - Site Copy
Hastings District Council
20/09/2022

Table 4

Nail requirements for trim	
Single Thickness	60mm jolt head nails. If fixing over Linea Weatherboard use predrilled* 75 x 3.15mm jolt head nails.
Double Thickness	60mm jolt head nails.
Single plus packer	If fixing over Linea Weatherboard use 75 x 3.15mm jolt head nails through a pre-drilled* hole. When fixing to timber support use 60mm jolt head nails.

* Use a 3.0mm drill bit. ** Use a 3.5mm drill bit

Note: Special fixing arrangements are required for bracing and fire-resistance rated wall systems. For more information Ask James Hardie on 0800 808 868.

5.4 GUN NAILING

Linea Weatherboard can also be gun-nailed with a D head or RounDrive nail when concealed fixing method is used.

- Gun-nailing must not be used when Linea Weatherboard is used for bracing.
- Nails must be no closer than 50mm from the ends of boards when gun nailing is used — double studs will be required.
- Be minimum length and gauge as per Table 3.
- Be finished flush with surface of board.

6 Jointing

The ends of Linea Weatherboards are jointed off-stud by means of a tongue and groove joint. Tongue and groove joints may be located centrally between studs but no closer than 100mm from the edge of a stud. The joints must be staggered by 600mm minimum. Flexible sealant must be applied in the tongue and groove joint at the time of installation.

7 Finishing

Note: Protective coating of Linea Weatherboard and Axent Trim is required in order to meet the durability requirements of the NZBC.

7.1 PREPARATION AND PRIMING

The Linea Weatherboard and Axent Trim must be dry before painting. Punch and fill all exposed nails a maximum of 2mm below the surface. Fill the hole with an exterior grade builders fill, allow to cure and sand smooth ready for priming. Prime the filled holes in accordance with paint manufacturer's specifications.

It is not recommended to seal under the lap of weatherboards as it helps circulation of air behind the weatherboard cladding.

7.2 SEALANTS

All sealants must demonstrate the ability to meet the relevant requirements of the NZBC and hold a current BRANZ Appraisal. Application and use of sealants must comply with manufacturer's instructions. Sealants, if coated, must be compatible with the paint system.

7.3 PAINTING

All Linea Weatherboards are pre-primed on their face and bottom edge with a factory applied acrylic base coat.

Linea Weatherboard must be painted within 90 days of installation. There is no restriction on the LRV of paint to be applied on the Linea Weatherboard. All exposed faces, including the top edges under the sills and bottom edges of Linea Weatherboard, Axent Trim and accessories must be finished with latex exterior paint system complying with any of parts 7, 8, 9, and 10 of AS 3730.

Dark coloured paints can be used on Linea Weatherboard and Trim. The dark colours in certain environments may fade over a period of time. Special paints/coatings are required in certain harsh environments.

Stainless steel soakers are generally left natural. For painting over stainless steel soakers, refer to paint manufacturer as special preparation and paints are required.

8 Storage and handling

Paint selection and the preparation required is dependant on paint chosen. Refer to the paint manufacturer for information before starting painting.

Linea Weatherboards and Axent Trim must be laid flat on a smooth level surface. To ensure optimum performance, store weatherboards under cover and keep dry prior to fixing. If the weatherboards should become wet, allow to dry thoroughly before fixing. Do not carry weatherboards on the flat, carry in the vertical position to avoid excessive bending.

ABA20220988
APPROVED - Site Copy
Hastings District Council
20/09/2022

9 Maintenance

The extent and nature of maintenance will depend on the geographical location and exposure of the building. It is the responsibility of the specifier to determine normal maintenance requirements to comply with The NZBC Acceptable Solution B2/AS1. As a guide, it is recommended that basic normal maintenance tasks shall include but not be limited to:

- Washing down exterior surfaces every 6-12 months*,
- Re-applying exterior protective finishes**,
- Maintaining the exterior envelope and connections including joints, penetrations, flashings and sealants,
- Cleaning out gutters, blocked pipes and overflows as required,
- Pruning back vegetation close to or touching the building,
- The clearances between the bottom edge of Linea Weatherboard and the finished/unfinished ground must always be maintained.
- Stainless steel soakers used in extreme coastal conditions or in sea spray zones may show some signs of 'tea staining'. It is an aesthetic issue and to minimise staining soaker must be washed/polished frequently.

*Do not use a water blaster to wash down the cladding.

*In extreme coastal conditions or sea spray zones, wash every 3-4 months.

**Refer to your paint manufacturer for washing down and recoating requirements related to paint performance.

10 Product information

10.1 MANUFACTURING AND CLASSIFICATION

James Hardie New Zealand Limited is an ISO 9001 Telarc certified manufacturer. Linea Weatherboard and Axent Trim are manufactured to meet the requirements of AS/NZS 2908.2: 2000 'Cellulose-Cement Products', Linea Weatherboard has a classification of Type A Category 3 in accordance with this Standard. Linea Weatherboard is an advanced lightweight cement composite building product incorporating James Hardie proprietary Scyon technology. The basic composition of product is Portland cement, ground sand, cellulose fibre and water.

Linea Weatherboard has a bevel back and tongue and groove at the ends for jointing. The bottom front edge of Linea Weatherboard is chamfered. The weatherboards are supplied pre-primed on their face and bottom edge with an acrylic primer.

Linea Weatherboards and Axent Trim are identified by the printing at regular intervals of the name Linea on the back face.

10.2 JAMES HARDIE TRIM

The Axent Trim, used for box corners, around windows and doors as well as special architectural features, is also made with the CLD technology and is supplied pre-primed with an acrylic primer.

10.3 DURABILITY

Linea Weatherboard and Axent Trim, when installed and maintained as per the technical specification, will meet the durability requirements for claddings as required in the NZBC Approved Document B2 'Durability'.

10.3.1 Resistance to moisture/rotting

Linea Weatherboard and Axent Trim have demonstrated resistance to permanent moisture-induced deterioration (rotting) and has passed the following tests in accordance with AS/NZS 2908.2:

- Water Permeability (Clause 6.2)
- Warm Water (Clause 6.4)
- Heat Rain (Clause 6.5)
- Soak Dry (Clause 6.6).
- Freeze-Thaw (Clause 8.2.3)

10.3.2 Control of External Fire Spread

Linea Weatherboard meets the requirements of Appendix C C7.1.1 and is classified as 'Non-Combustible Material' which is suitable for use as external wall cladding and complies with the requirements of Paragraph 5.4 of the NZBC Acceptable Solution C/AS1 and Paragraph 5.8.1 of Acceptable Solutions C/AS2 to C/AS6 of the NZBC.

10.3.3 Alpine regions

In regions subject to freeze/thaw conditions, Linea Weatherboard must not be in direct contact with snow or ice build up for extended periods, e.g. external walls in alpine regions subject to snow drifts over winter.

The Linea Weatherboard has been tested in accordance with AS/NZS 2908.2 Clause 8.2.3.

10.4 PRODUCT SIZES AND MASS

Available sizes of Linea Weatherboard and Axent Trim and its weight are given in Table 6.

10.5 SIZE AND WEIGHT

Linea Weatherboard is categorised as a Light Weight Wall Cladding as described in NZS 3604. Physical properties of Linea Weatherboard and Axent Trim are provided in Table 6.

ABA20220988
APPROVED - Site Copy
Hastings District Council
20/09/2022

11 Safe working practices

WARNING — DO NOT BREATHE DUST AND CUT ONLY IN WELL VENTILATED AREA

James Hardie products contain sand, a source of respirable crystalline silica which is considered by some international authorities to be a cause of cancer from some occupational sources. Breathing excessive amounts of respirable silica dust can also cause a disabling and potentially fatal lung disease called silicosis, and has been linked with other diseases. Some studies suggest smoking may increase these risks. During installation or handling: (1) work in outdoor areas with ample ventilation; (2) minimise dust when cutting by using either 'Score and Snap' knife, fibre cement shears or, where not feasible, use a HardieBlade™ Saw Blade and dust-reducing circular saw attached to a HEPA vacuum; (3) warn others in the immediate area to avoid breathing dust; (4) wear a properly-fitted, approved dust mask or respirator (e.g. P1 or P2) in accordance with applicable government regulations and manufacturer instructions to further limit respirable silica exposures. During clean-up, use HEPA vacuums or wet cleanup methods — never dry sweep. For further information, refer to our installation instructions and Safety Data Sheets available at www.jameshardie.co.nz.

FAILURE TO ADHERE TO OUR WARNINGS, SAFETY DATA SHEETS, AND INSTALLATION INSTRUCTIONS MAY LEAD TO SERIOUS PERSONAL INJURY OR DEATH.

James Hardie recommended safe working practices

CUTTING OUTDOORS

1. Position cutting station so wind will blow dust away from the user or others in working area.
2. Use one of the following methods based on the required cutting rate:

BEST

- Dust reducing circular saw equipped with HardieBlade™ Saw Blade and HEPA vacuum extraction.

GOOD

- Dust reducing circular saw with HardieBlade™ Saw Blade.

SANDING/REBATING/DRILLING/OTHER MACHINING

When sanding, rebating, drilling or machining you should always wear a P1 or P2 dust mask and warn others in the immediate area.

IMPORTANT NOTES

1. For maximum protection (lowest respirable dust production), James Hardie recommends always using "Best" — level cutting methods where feasible.
2. NEVER use a power saw indoors.
3. NEVER use a circular saw blade that does not carry the HardieBlade™ logo.
4. NEVER dry sweep — Use wet suppression or HEPA vacuum.
5. NEVER use grinders.
6. ALWAYS follow tool manufacturers' safety recommendations.

P1 or P2 respirators should be used in conjunction with above cutting practices to further reduce dust exposures. Additional exposure information is available at www.jameshardie.co.nz to help you determine the most appropriate cutting method for your job requirements. If concern still exists about exposure levels or you do not comply with the above practices, you should always consult a qualified industrial hygienist or contact James Hardie for further information.

ABA20220988
APPROVED - Site Copy
Hastings District Council
20/09/2022

Working instructions

Refer to recommended Safe Working Practices before starting any cutting or machining of product.

HardieBlade™ Saw Blade



The HardieBlade™ Saw Blade used with a dust-reducing saw connected to a HEPA vacuum is ideal for fast, clean cutting of James Hardie fibre cement products. A dust-reducing saw uses a dust deflector or a dust collector connected to a vacuum system. When sawing, clamp a straight-edge to the sheet as a guide and run the saw base plate along the straight edge when making the cut.

Hole-forming

For smooth clean cut circular holes:

Mark the centre of the hole on the sheet.

Pre-drill a pilot hole.

Using the pilot hole as a guide, cut the hole to the appropriate diameter with a hole saw fitted to a heavy duty electric drill.

For irregular holes:



Small rectangular or circular holes can be cut by drilling a series of small holes around the perimeter of the hole then tapping out the waste piece from the sheet face.

Tap carefully to avoid damage to sheets, ensuring that the sheet edges are properly supported.

Storage and handling

All James Hardie building products should be stored to avoid damage, with edges and corners of the sheets protected from chipping.

James Hardie building products must be installed in a dry state and be protected from rain during transport and storage. The product must be laid flat under cover on a smooth level surface clear of the ground to avoid exposure to water or moisture, etc.

Quality

James Hardie conducts stringent quality checks to ensure that any product manufactured falls within our quality spectrum. It is the responsibility of the builder to ensure that the product meets aesthetic requirements before installation. James Hardie will not be responsible for rectifying obvious aesthetic surface variations following installation.

12 Product sizes

Table 6

Linea Weatherboard and Axent Trim sizes

						Coverage Information			
Product	Length (mm)	Width (mm)	Thickness (mm)	End Details	Effective Cover (mm)	No. of planks/ metre height (approx.)	Mass kg/lineal m (approx. at EMC)	Mass kg/m^2 (approx. at EMC)	Weight/ packs (60 units/ pack)
Linea Weatherboard 135	4200*	135	16	T & G	105	9.5	2.62	25.70	660.00
Linea Weatherboard 150	4200*	150	16	T & G	120	8.3	3.1	24.93	781.00
Linea Weatherboard 180	4200*	180	16	T & G	150	6.7	3.57	23.92	899.00
Axent Trim 84mm	2600	84	16	Square	N/A	N/A	1.6	N/A	N/A
Axent Trim 100mm	2600	100	16	Square	N/A	N/A	1.9	N/A	N/A

*Length is 4200mm plus 5mm for the tongue and groove making overall length 4205mm

*The effective thickness of finished Linea Weatherboard on the wall at the lap is approximately 33 to 35mm

NOTE: All dimensions and masses provided are approximate only and are subject to manufacturing tolerances.

ABA20220988
APPROVED - Site Copy
Hastings District Council
20/09/2022

13 Accessories

Table 7

Accessories/Tools supplied by James Hardie			
Accessories	**Description**	**Size (mm)**	**Code**
	**External corner soaker 90° for Linea Weatherboards 180mm** • Aluminium • Copper • Stainless Steel	200 long	**301186** **301188** **301197**
	**External corner soaker 135° for Linea Weatherboards 180mm** • Aluminium	200 long	**301178**
	**External corner soaker 90° for Linea Weatherboards 150mm** • Aluminium • Stainless Steel	170 long	**302820** **302821**
	**External corner soaker 90° for Linea Weatherboards 135mm** • Aluminium • Stainless Steel	155 long	**301185** **301196**
	**External Slimline Box Corner Mould** Etched primed aluminium extrusion used to create external corner	2700 long 4000 long	**301195** **305809**
	**Box Corner 'Z' Flashing**	2700 long	**301203**
	**Internal 'W' Mould 90°** Etched primed aluminium extrustion used to create 90° internal corner	2700 long 4000 long	**301184** **305807**
	**Internal 'W' Mould 135°** Etched primed aluminium extrustion used to create 135° internal corner	2700 long	**301183**
	**Vent Strip** PVC moulding used as vermin proofing	3000 long	**302490**
	**JH Corner Under Flashing 50 x 50mm** PVC moulding used as under fashing for internal and external corners	3000 long	**303745**
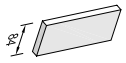	**Axent Trim 84mm**	84 x 2600 long	**401943**
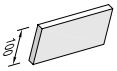	**Axent Trim 100mm**	100 x 2600 long	**401930**
	**HardieFlex™ nail - 5kg**	60 x 3.15mm	**302782**
	**HardieFlex™ nail - 5kg**	60 x 3.15mm	**302784**
	**HardieBlade™ Saw Blade** Diamond tip fibre cement circular saw blade. Spacers not included	4 tooth - 184mm	**300660**
	**HardieBlade™ Saw Blade** Diamond tip fibre cement circular saw blade. Spacers not included	6 tooth - 254mm	**303375**
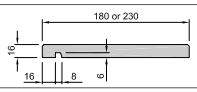	Axent Fascia - 180mm - 230mm	4200 long	**401843** **402230**

ABA20220988
APPROVED - Site Copy
Hastings District Council
20/09/2022

Table 8

Accessories not supplied by James Hardie

James Hardie recommends the following products for use in conjunction with its Linea Weatherboard and Axent Trim.
James Hardie does not supply these products. There may also be some other accessories required depending upon the application. Please contact component manufacturer for information on their warranties and further information on their products.

Accessories	Description	Size (MM)	Material/ appearance
	**Head flashing** Required over window heads to be supplied by window installer. Material must comply with Table 20 and 21 of E2/AS1.	To suit	Etch Primed Aluminium/Powder Coated
	**D head or RounDrive Nail** Gun nail for concealed fixing Linea Weatherboard.	50 x 2.87 60 x 3.15	Hot Dip Galvanised Stainless Steel
	**HardieFlex™ Hot Dip Galv. Nails** For fixing cavity battens.	40 x 2.8mm	Hot Dip Galvanised
	Jolt Head Nail for face fixing to Linea Weatherboard. Hot Dip Galvanised or 316 Stainless Steel	50 x 2.8mm 60 x 3.15mm 75 x 3.15mm 90 x 4.0mm	Self colour
	**Joint sealant** Paintable flexible sealants are recommended for filling the joints. Refer to Section 7.2 for information.	Tube	Sika, Holdfast
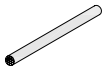	PEF Rod	Polyethylene foam	Sika or similar
	**Flexible tape** A flexible self-adhesive tape used in preparation of a window. Refer to the Window installation section in this manual for more information. e.g. Tyvek ® , Marshall Innovations or similar.	Proprietary tape to adhere to flexible underlay	Tyvek, Marshall Innovations or similar
	**Flashing Material** as per Table 20, 'E2/AS1'		Flashing Fabricator
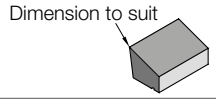	Planted Sill		H3.1 minimum Treated Timber Timber Merchant or cut on site
	Titanium Coated High Speed Drill Bit. For pre-drilling prior to face fixing with jolt head.	3.0mm 3.5mm	
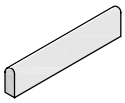	Timber Scriber To scribe beside window, site cut to suit.	As required	H3.1 minimum Treated Timber Timber Merchant or cut on site
	Fibre Cement Cutting Blade Diamond tip 305mm diameter circular saw blade to fit drop saw.	305mm	Diamond Tipped
	Meter Box Refer Electrical Suppliers		
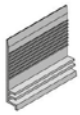	Cant Strip Redway Developments 03 358 5775 Predrill the weatherboards when fixing using Redway Development Cant/Vent Strips	To suit	uPVC
	Inseal 3109 Sealing Strip.	5 x 3mm x 25mm	Black Compressible Foam
	CRC Builders Fill Two part exterior grade fill to finish over jolt head nails.		

ABA20220988
APPROVED - Site Copy
Hastings District Council
20/09/2022

14 Details

Various details outlined in the following table are available on Pages 15 to 42.

Table 9

Details				
Description	**Direct fixed**		**Timber Cavity Batten Construction**	
	Figure	**Page**	**Figure**	**Page**
Foundation detail and soffit detail	Figure 1	15		
Weatherboard fixing	Figure 2	15	Figure 30	30
Boxed corner	Figure 3 & 4	16	Figure 31	31
Mitre corner	Figure 5	17	Figure 32	31
Aluminium box corner	Figure 6	17	Figure 33	31
External corner soaker	Figure 7	18	Figure 34	32
Internal corner	Figure 8	18	Figure 35	32
Internal 90° aluminium 'W' mould corner	Figure 9	19	Figure 36	33
Internal 135° aluminium 'W' mould corner	Figure 10	19	Figure 37	33
Window sill with facings			Figure 39	34
Window sill with sill tray and facings	Figure 11	20		
Window door and head with facings	Figure 12	20	Figure 40	35
Window door and jamb with facings	Figure 13	21	Figure 41	35
Window door and sill without facings	Figure 14	21	Figure 42	35
Window door and head without facings	Figure 15	22	Figure 43	36
Window door and jamb without facings	Figure 16	22	Figure 44	36
Head flashing termination	Figure 17	23	Figure 45	37
One piece apron flashing joint	Figure 18	23	Figure 46	37
Pipe penetration	Figure 19	24	Figure 48	38
Meter box at head	Figure 20	24	Figure 49	39
Meter box at sill	Figure 21	25	Figure 50	39
Meter box at jamb	Figure 22	25	Figure 51	40
Timber cavity fix meter box			Figure 52	41
Deck junction	Figure 23	26	Figure 61	47
Cantilevered timber deck junction	Figure 24	27	Figure 62	47
Sloping soffit to weatherboard junction	Figure 25	27	Figure 59	46
Timber cavity batten fixing			Figure 27	28
Foundation detail			Figure 28	29
Soffit detail			Figure 29	29
Batten layout at window opening			Figure 38	34
One piece gutter/wall junction			Figure 47	38
Floating lap over floor joist			Figure 53	42
Drainage joint			Figure 54	43
Enclosed deck balustrade to wall			Figure 55	43
Enclosed balustrade to wall			Figure 56	44
Enclosed deck	Figure 26	28	Figure 57	45
Parapet flashing			Figure 58	45
Sloping soffit and wall junction			Figure 60	46
Door sill support detail			Figure 63	48
Junction between Linea™ Weatherboard and fascia board			Figure 64	49
Exclosed roof to wall intersection			Figure 65	50

ABA20220988
APPROVED - Site Copy
Hastings District Council
20/09/2022

Figure 1: Direct fix foundation detail and soffit detail

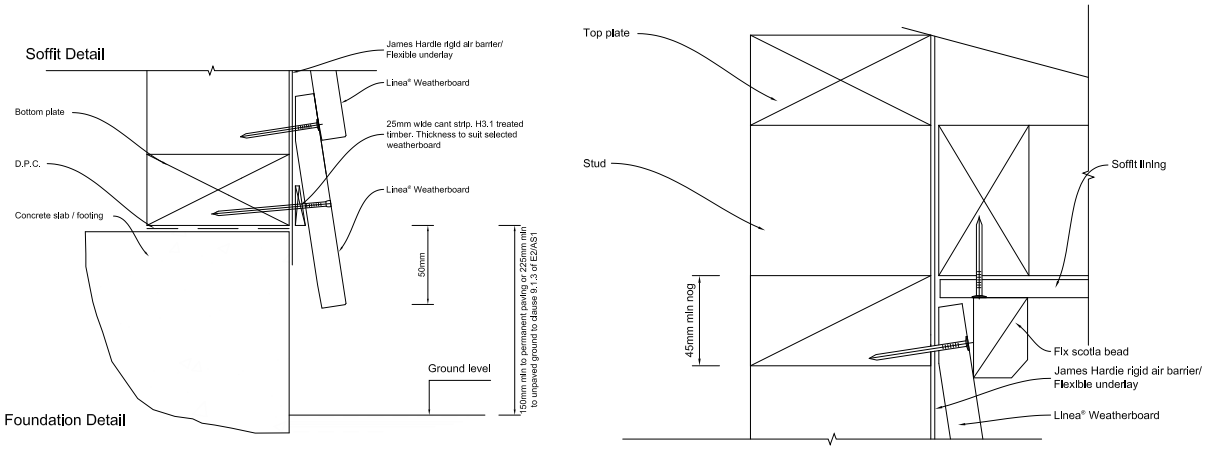

Foundation Detail

Soffit Detail

Figure 2: Direct fix weatherboard fixing

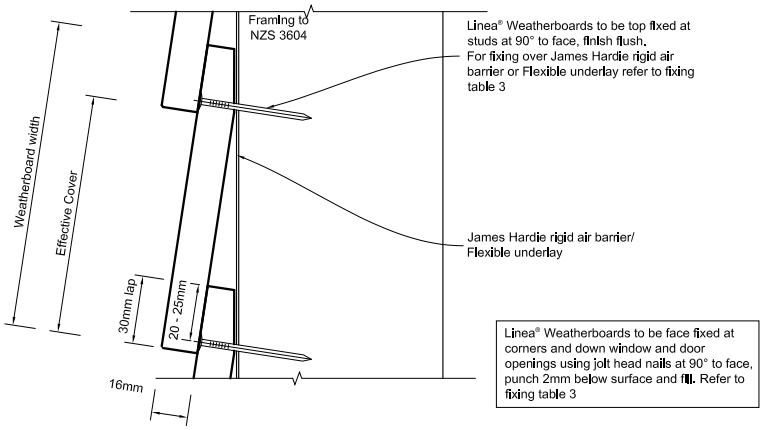

Concealed Nailing

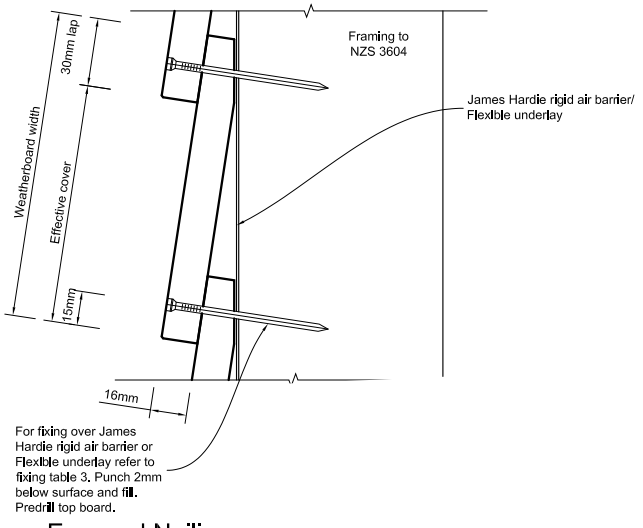

Exposed Nailing

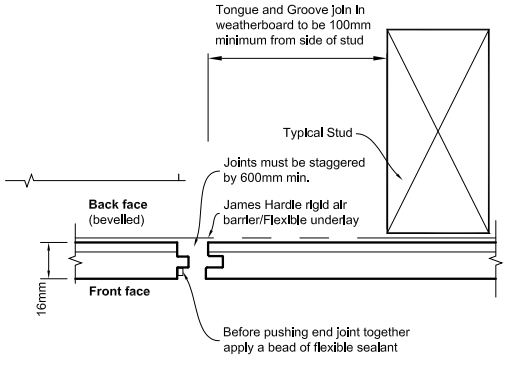

Jointing Off Stud

ABA20220988
APPROVED - Site Copy
Hastings District Council
20/09/2022

Figure 3: Direct fix boxed corner - Option 1

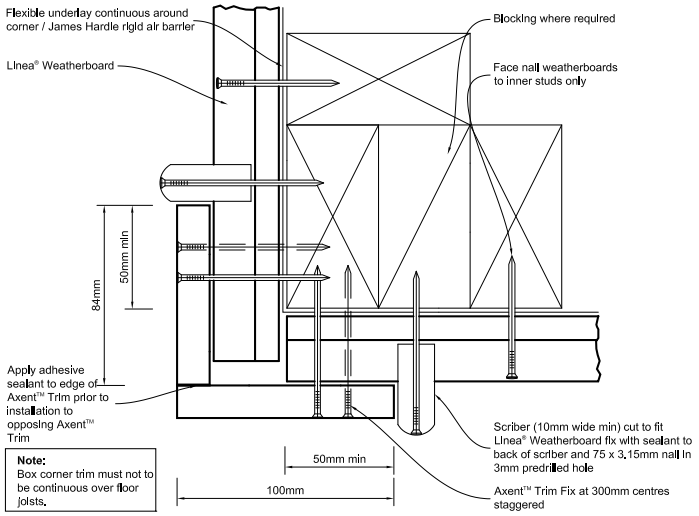

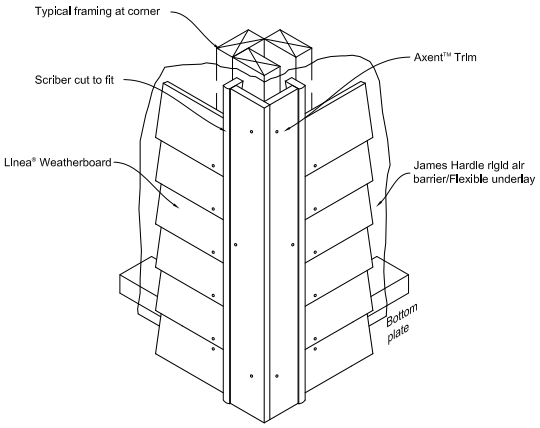

Figure 4: Direct fix boxed corner - Option 2

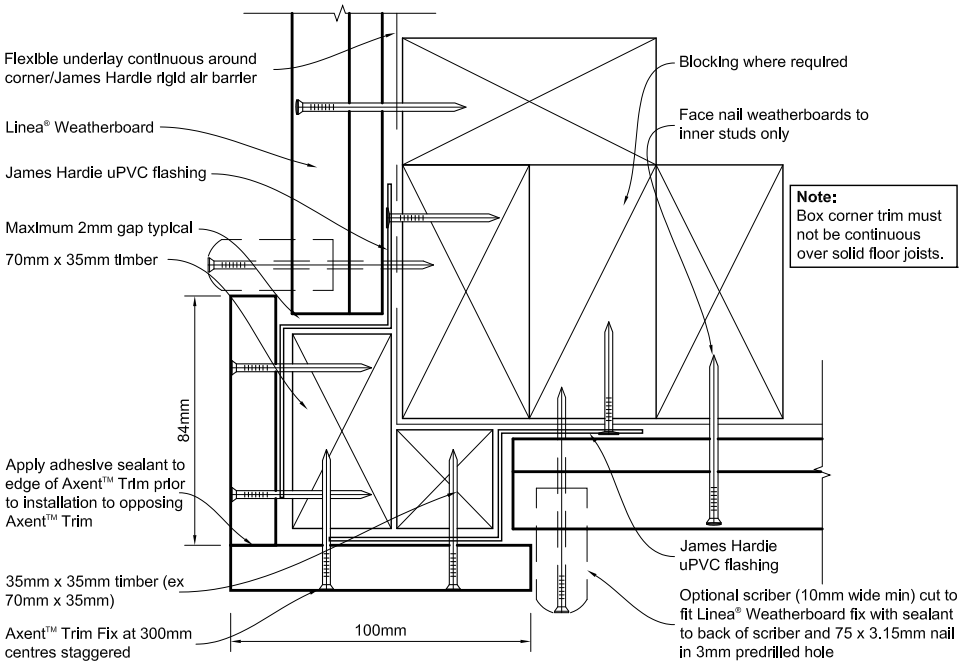

ABA20220988
APPROVED - Site Copy
Hastings District Council
20/09/2022

Figure 5: Direct fix mitre corner

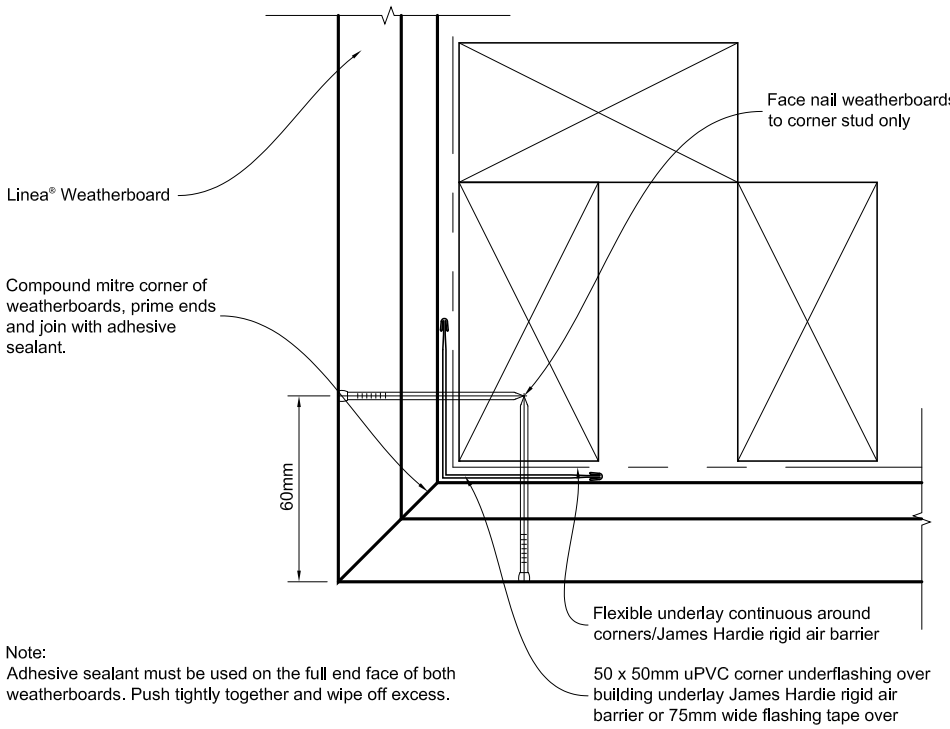

Note:
Adhesive sealant must be used on the full end face of both weatherboards. Push tightly together and wipe off excess.

Figure 6: Direct fix aluminium box corner

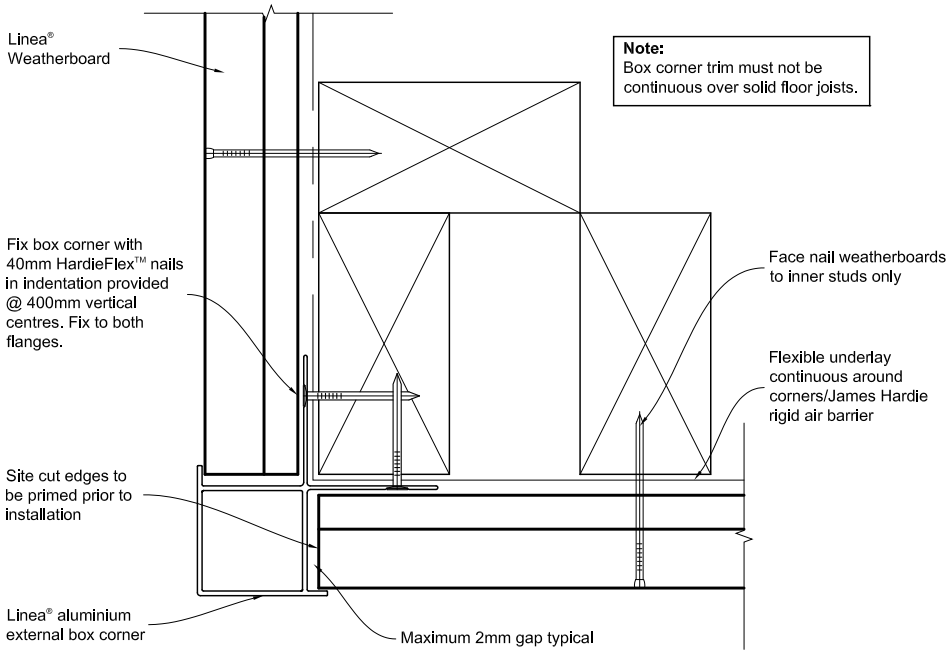

ABA20220988
APPROVED - Site Copy
Hastings District Council
20/09/2022

Figure 7: Direct fix external corner soaker

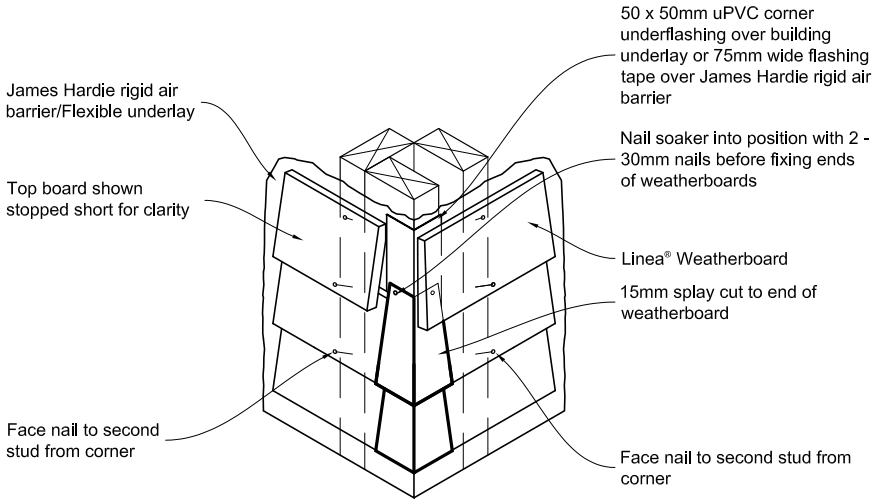

Soaker material	Nail material
Copper	Copper or phosphor bronze
Aluminium	Hot dip galvanised
Stainless steel	Stainless steel

Figure 8: Direct fix internal corner

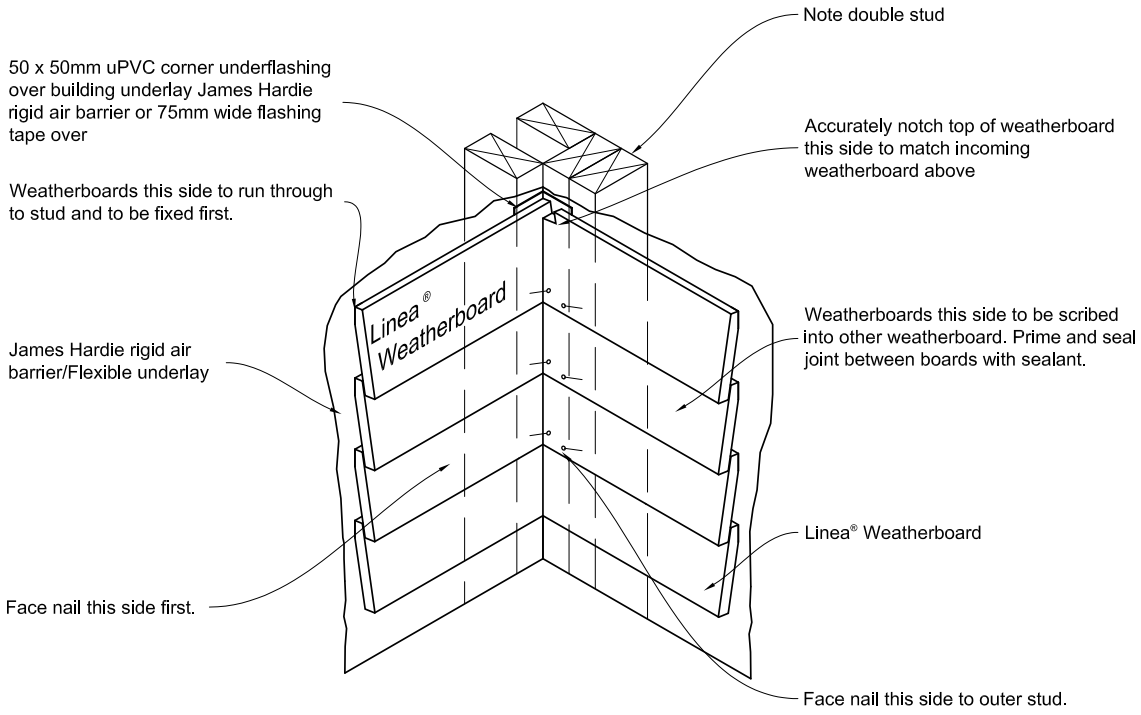

ABA20220988
APPROVED - Site Copy
Hastings District Council
20/09/2022

Figure 9: Direct fix internal 90° aluminium 'W' mould corner

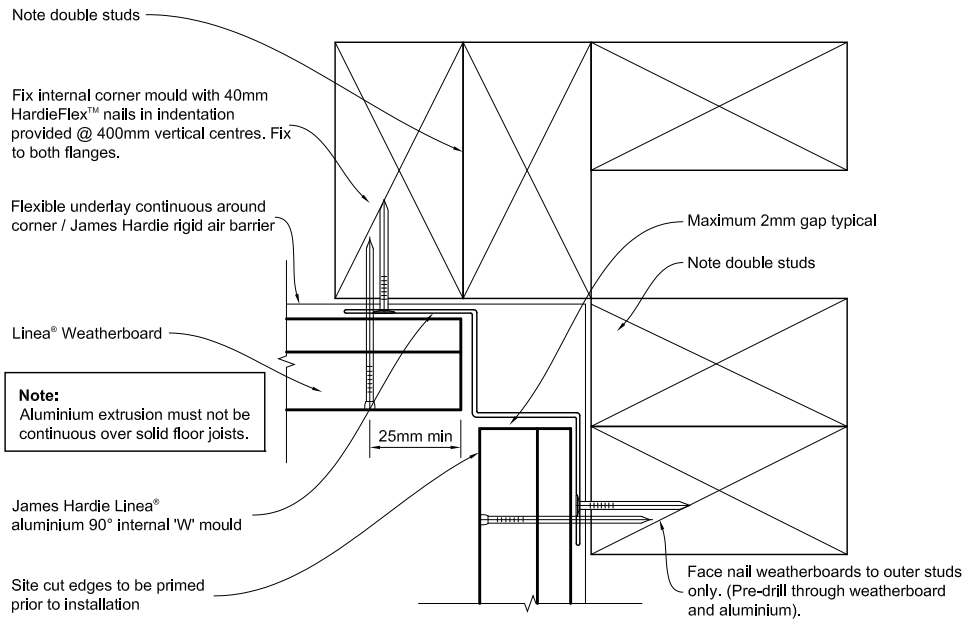

Figure 10: Direct fix internal 135° aluminium 'W' mould corner

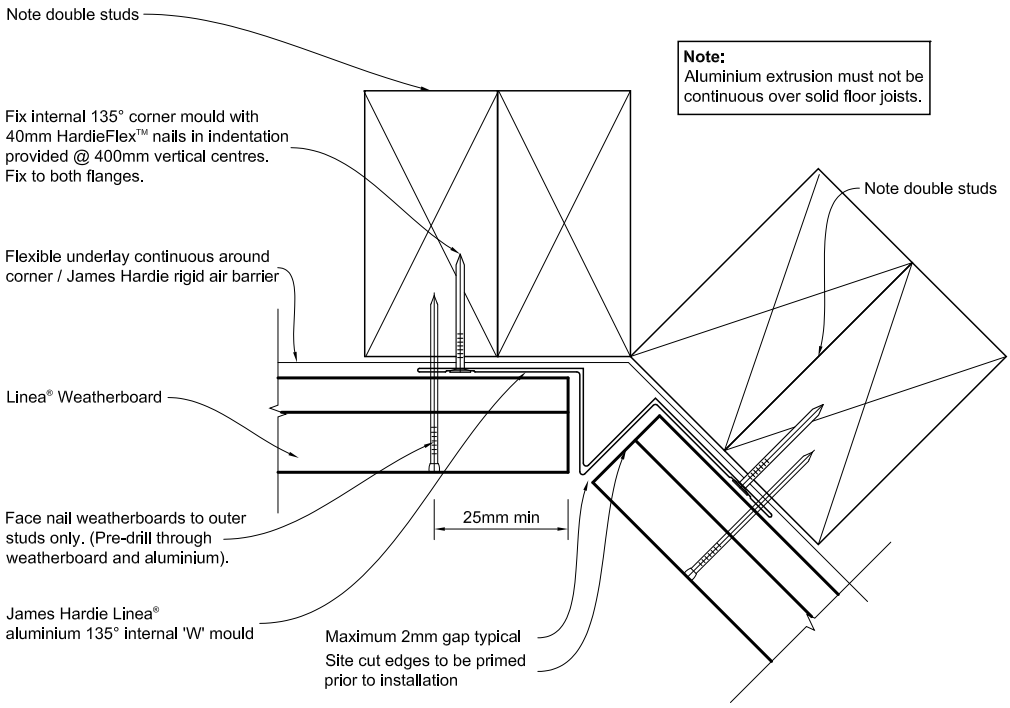

ABA20220988
APPROVED - Site Copy
Hastings District Council
20/09/2022

Figure 11: Direct fix window sill flashing sill tray and facings

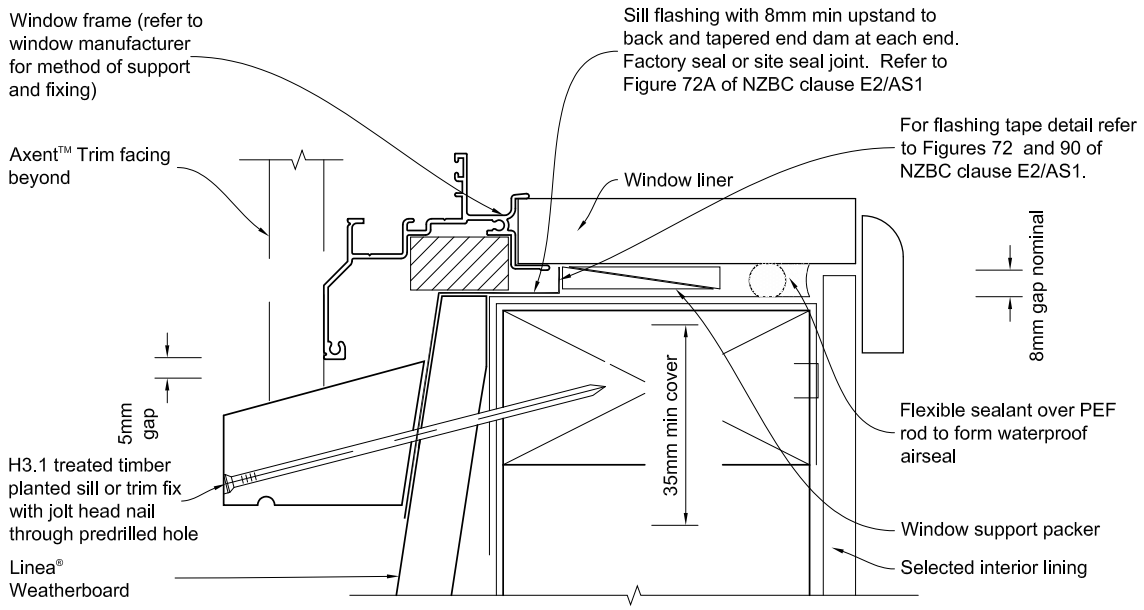

General notes for materials selection

1. Flashing materials must be selected based on environmental exposure, refer to NZS 3604 and Table 20 of NZBC clause E2/AS1.
2. Flexible underlay must comply with acceptable solution E2/AS1.
3. Flashing tape must have proven compatibility with the selected flexible underlay/James Hardie rigid air barrier and other materials with which it comes into contact .

Refer to the manufacturer or supplier for technical information for these materials.

Figure 12: Direct fix window head and door with facings

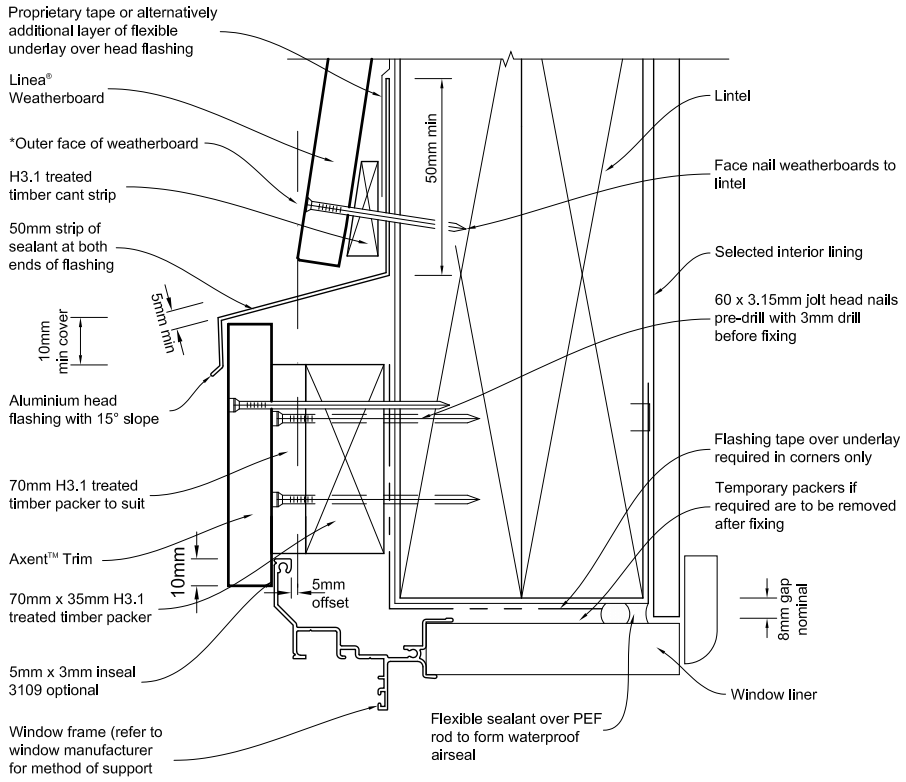

Note:
When James Hardie rigid air barrier is used flashing tape to be applied to the entire window opening. Sealant must be installed between head flashing and trim in VH wind zones. Refer to Figure 71 of E2/AS1

ABA20220988
APPROVED - Site Copy
Hastings District Council
20/09/2022

Figure 13: Direct fix window and door jamb with facings

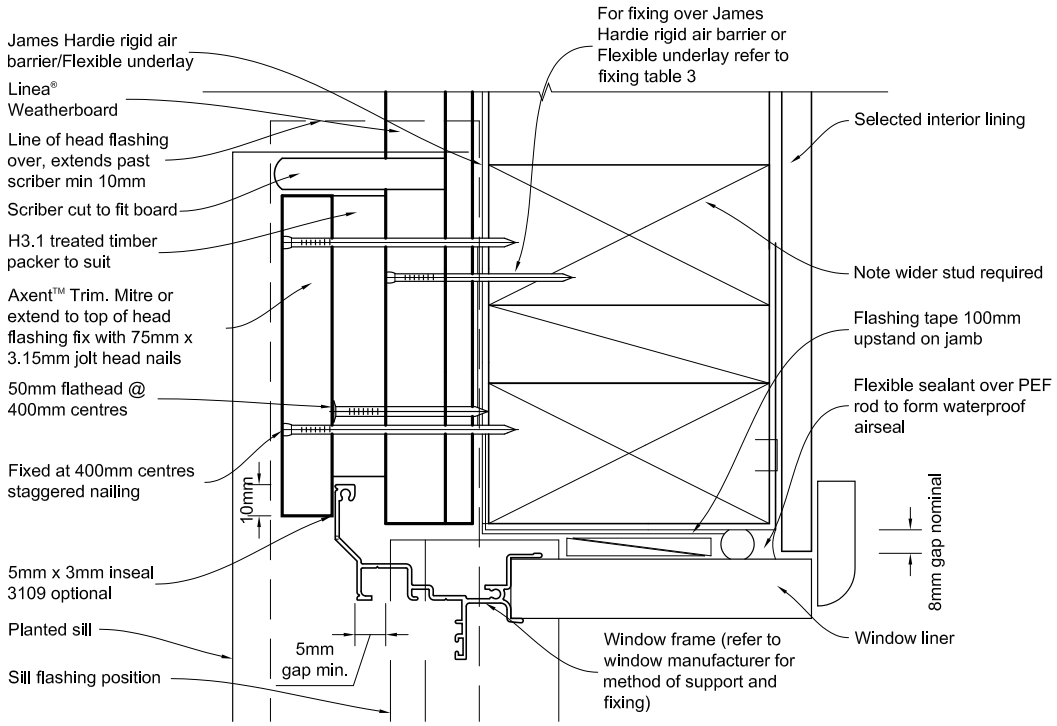

Note:
When James Hardie rigid air barrier is used flashing tape to be applied to the entire window opening.

Figure 14: Direct fix window and door sill without facings

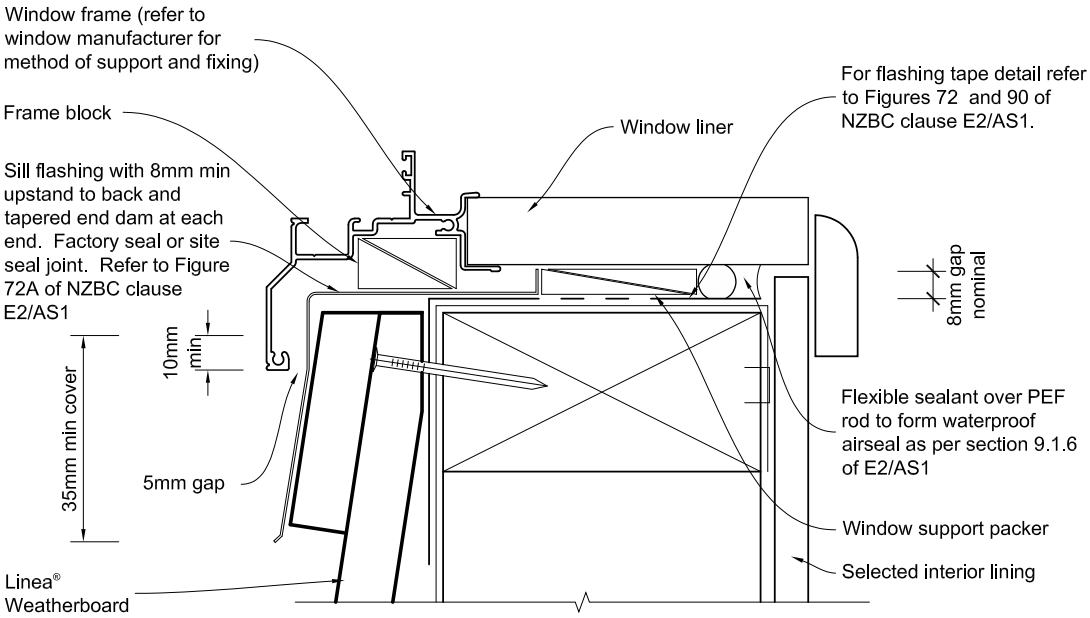

General notes for materials selection

1. Flashing materials must be selected based on environmental exposure, refer to NZS 3604 and Table 20 of NZBC clause E2/AS1.
2. Flexible underlay must comply with acceptable solution E2/AS1.
3. Flashing tape must have proven compatibility with the selected flexible underlay/James Hardie rigid air barrier and other materials with which it comes into contact.

Refer to the manufacturer or supplier for technical information for these materials.

ABA20220988
APPROVED - Site Copy
Hastings District Council
20/09/2022

Figure 15: Direct fix window and door head without facings

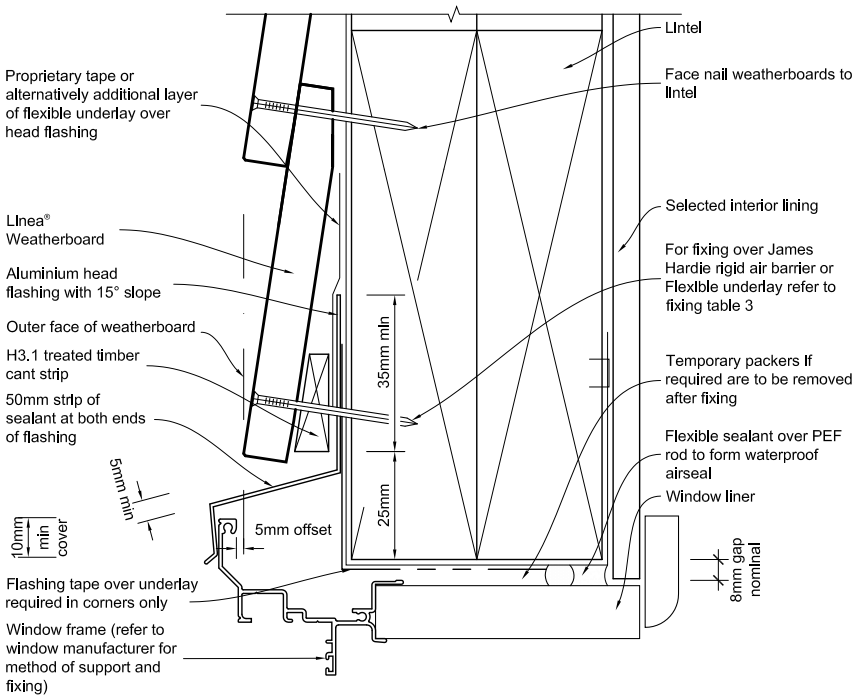

Note:
When James Hardie rigid air barrier is used flashing tape to be applied to the entire window opening.
Sealant must be installed between head flashing and window flange in VH wind zones. Refer Figure 71 of E2/AS1

Figure 16: Direct fix window and door jamb without facings

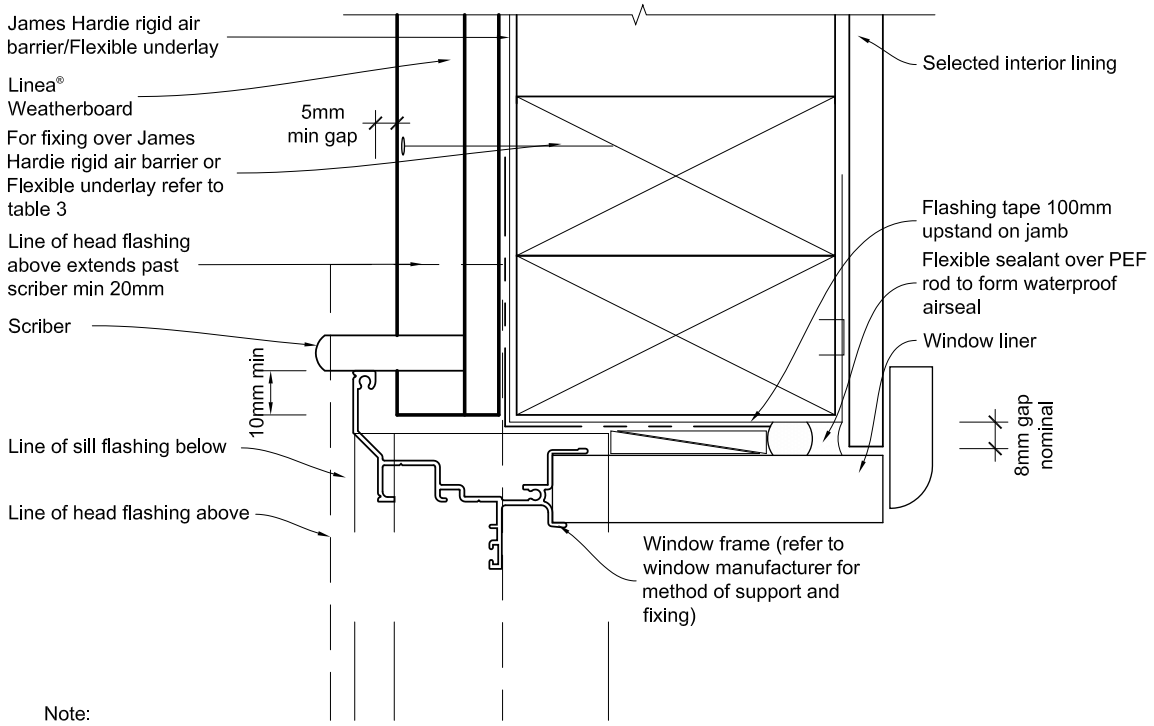

Note:
When James Hardie rigid air barrier is used flashing tape to be applied to the entire window opening.
Alternatively window jamb can be formed as per E2/AS1 with jamb battens.

ABA20220988
APPROVED - Site Copy
Hastings District Council
20/09/2022

Figure 17: Direct fix head flashing termination

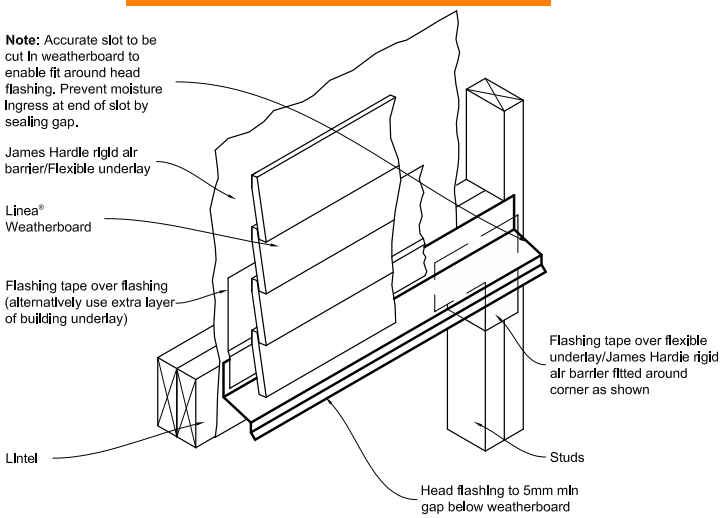

Note:
When James Hardie rigid air barrier is used flashing tape to be applied to the entire window opening.

Figure 18: Direct fix one piece apron flashing joint

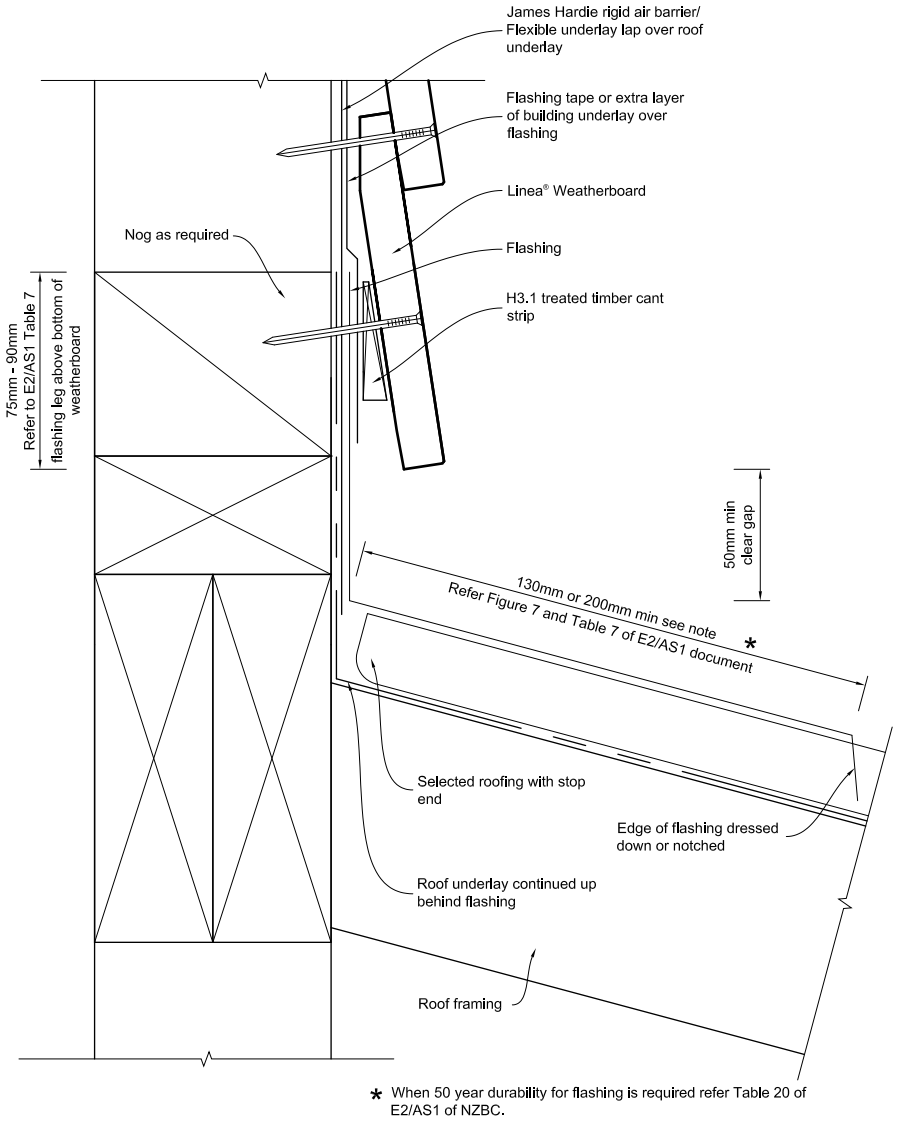

* When 50 year durability for flashing is required refer Table 20 of E2/AS1 of NZBC.

Vertical Section

ABA20220988
APPROVED - Site Copy
Hastings District Council
20/09/2022

Figure 19: Direct fix pipe penetration

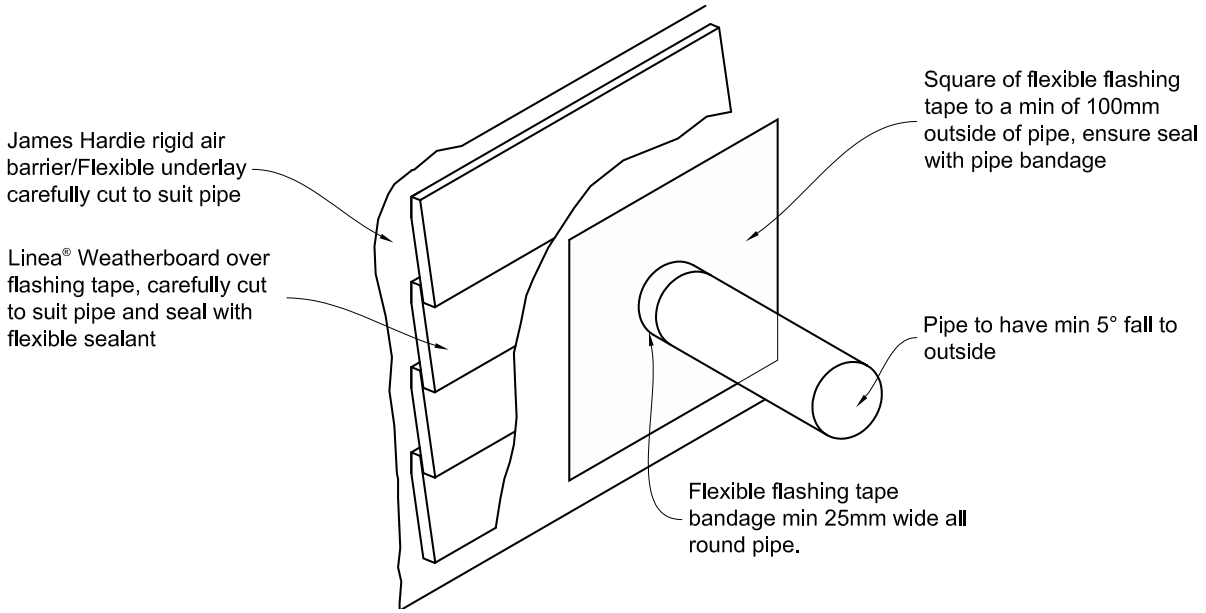

Figure 20: Direct fix meter box at head

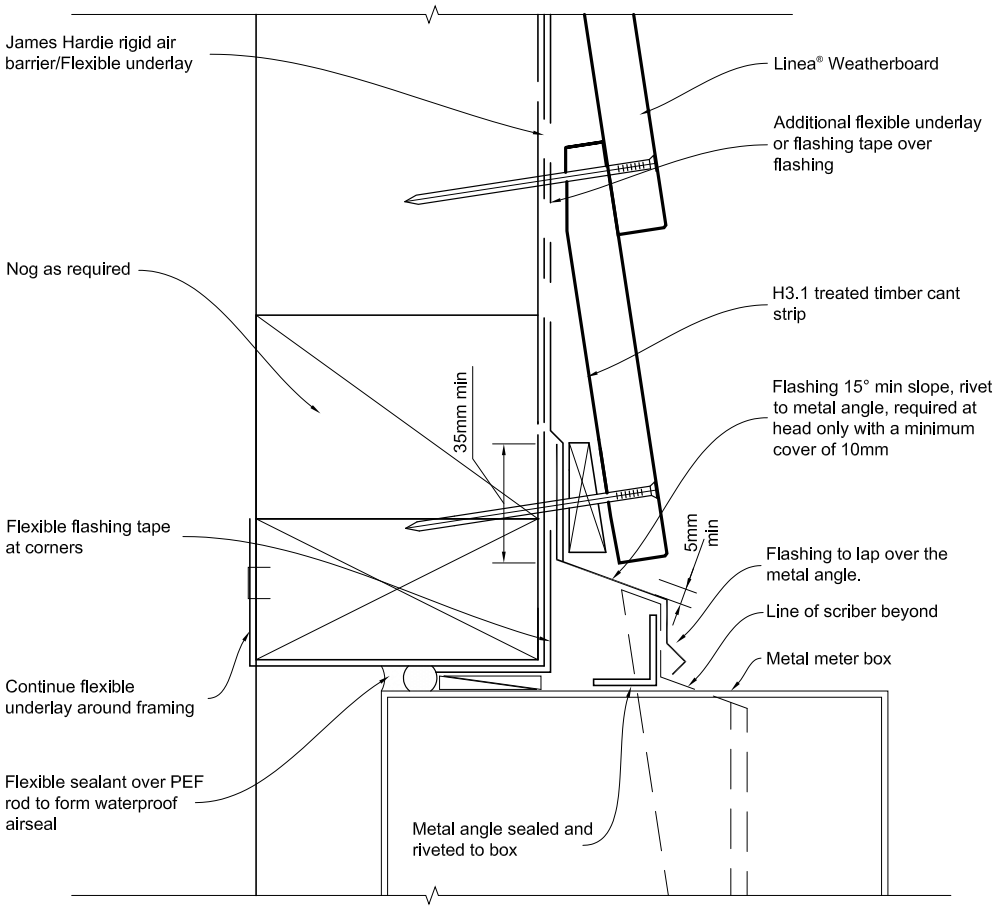

Note:
When James Hardie rigid air barrier is used flashing tape to be applied to the entire opening.

ABA20220988
APPROVED - Site Copy
Hastings District Council
20/09/2022

Figure 21: Direct fix meter box at sill

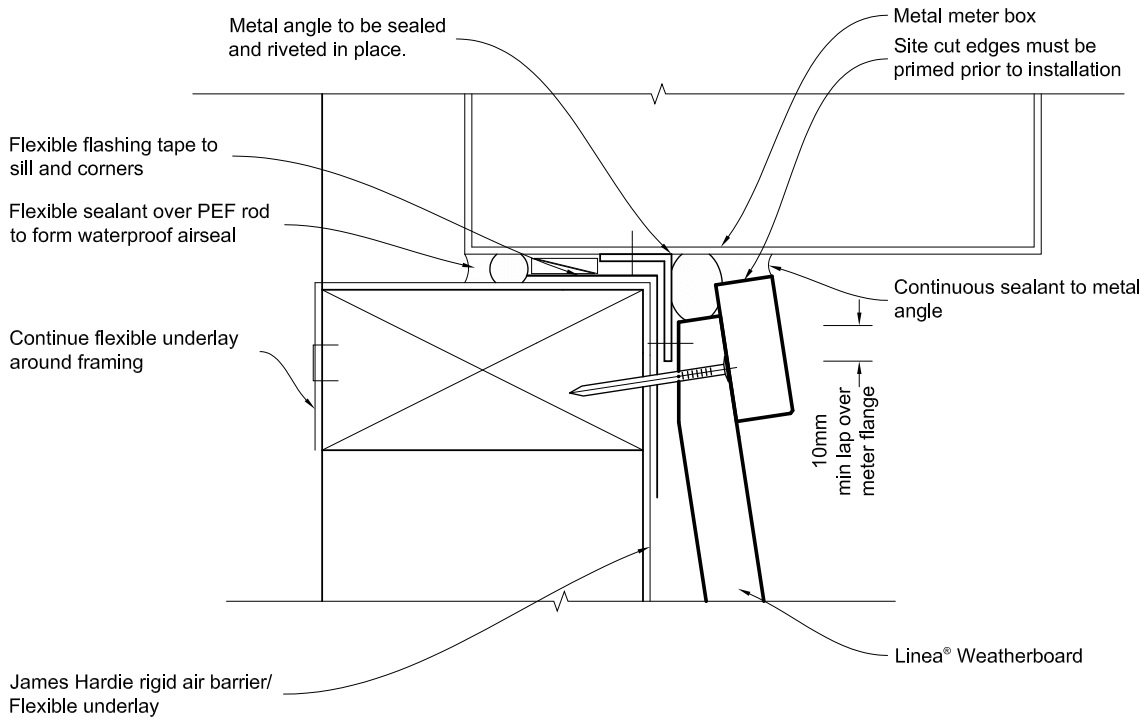

Note:
When James Hardie rigid air barrieris used flashing tape to be applied to the entire opening.

Figure 22: Direct fix meter box at jamb

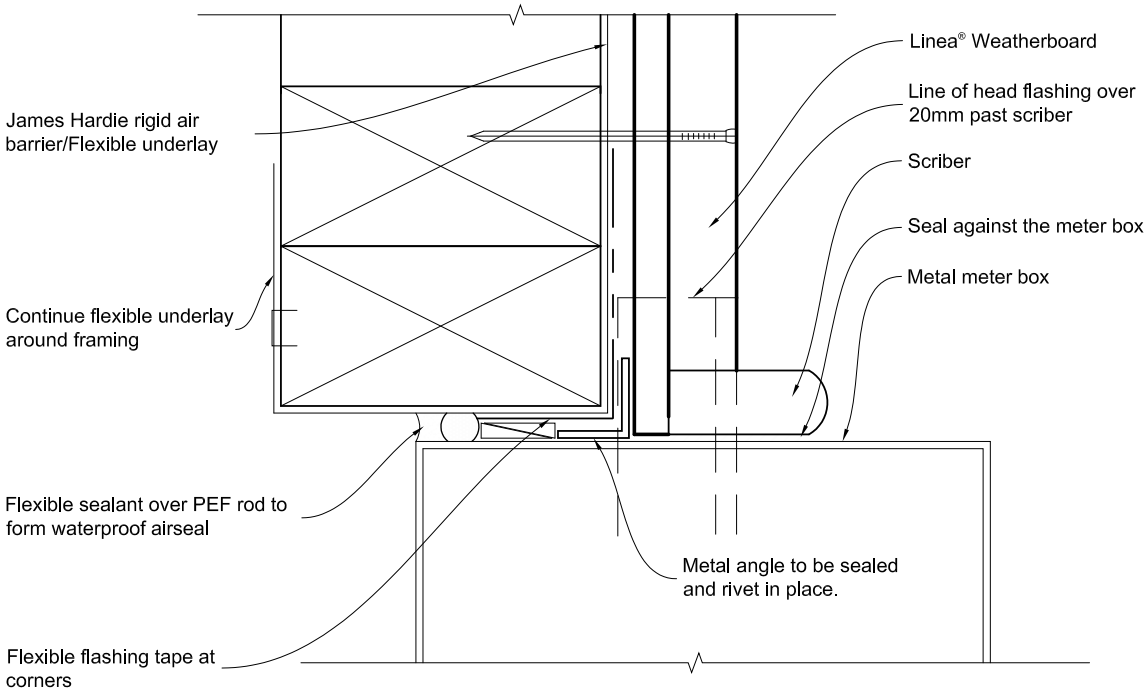

Note:
When James Hardie rigid air barrier is used flashing tape to be applied to the entire opening.

ABA20220988
APPROVED - Site Copy
Hastings District Council
20/09/2022

Figure 23: Direct fix deck junction

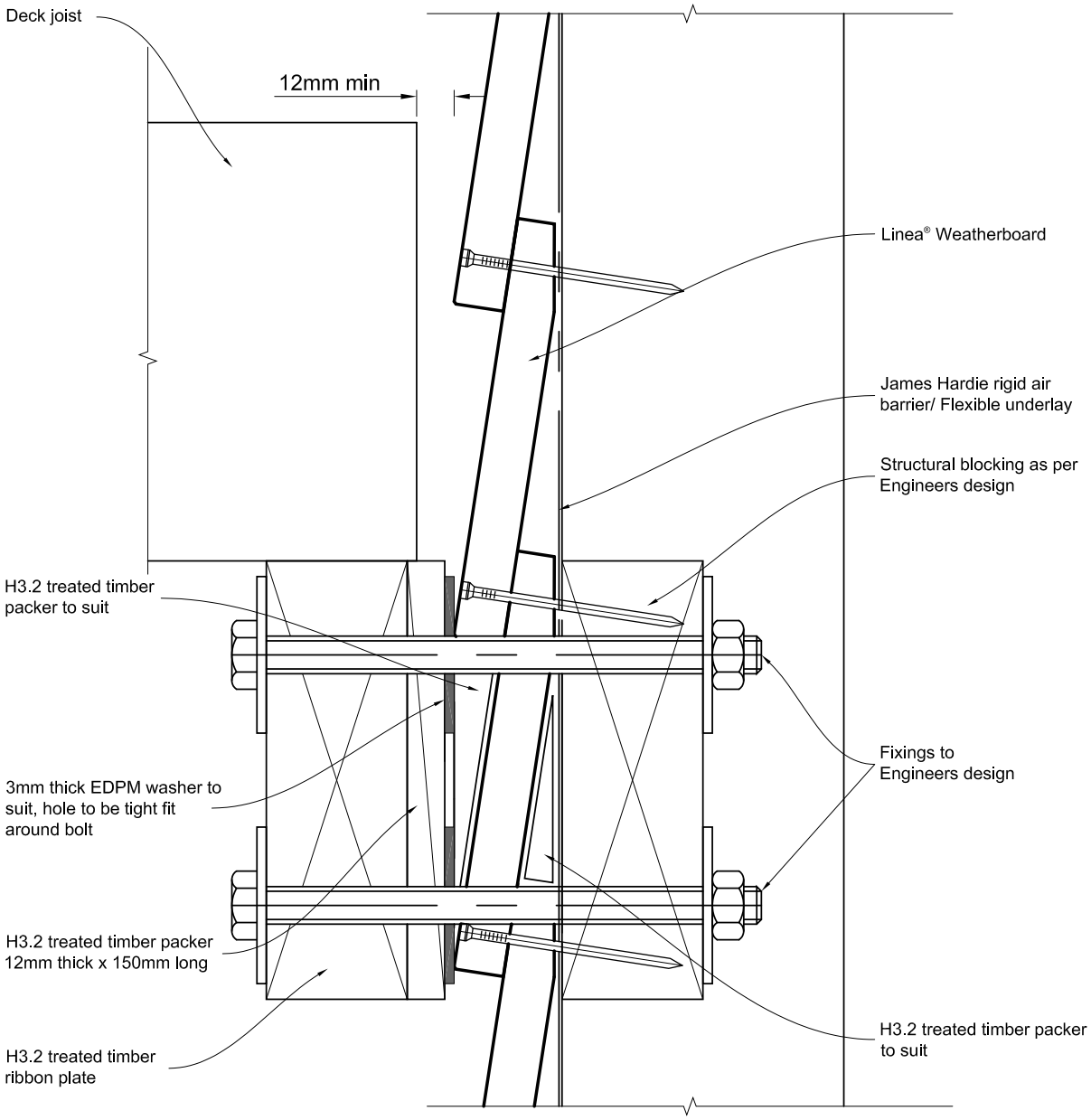

ABA20220988
APPROVED - Site Copy
Hastings District Council
20/09/2022

Figure 24: Direct fix cantilever deck junction

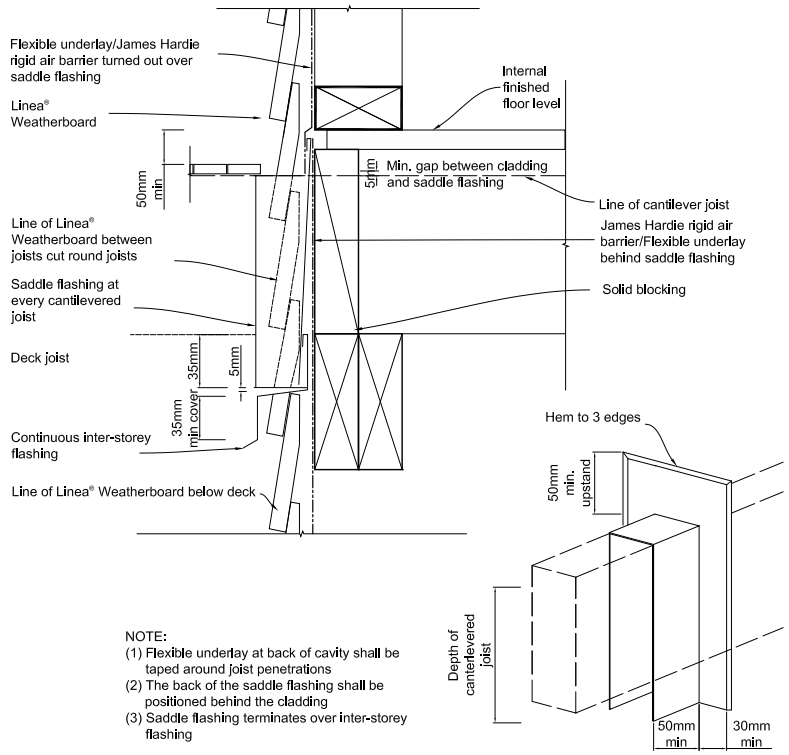

Figure 25: Sloping soffit to weatherboard junction combined figure

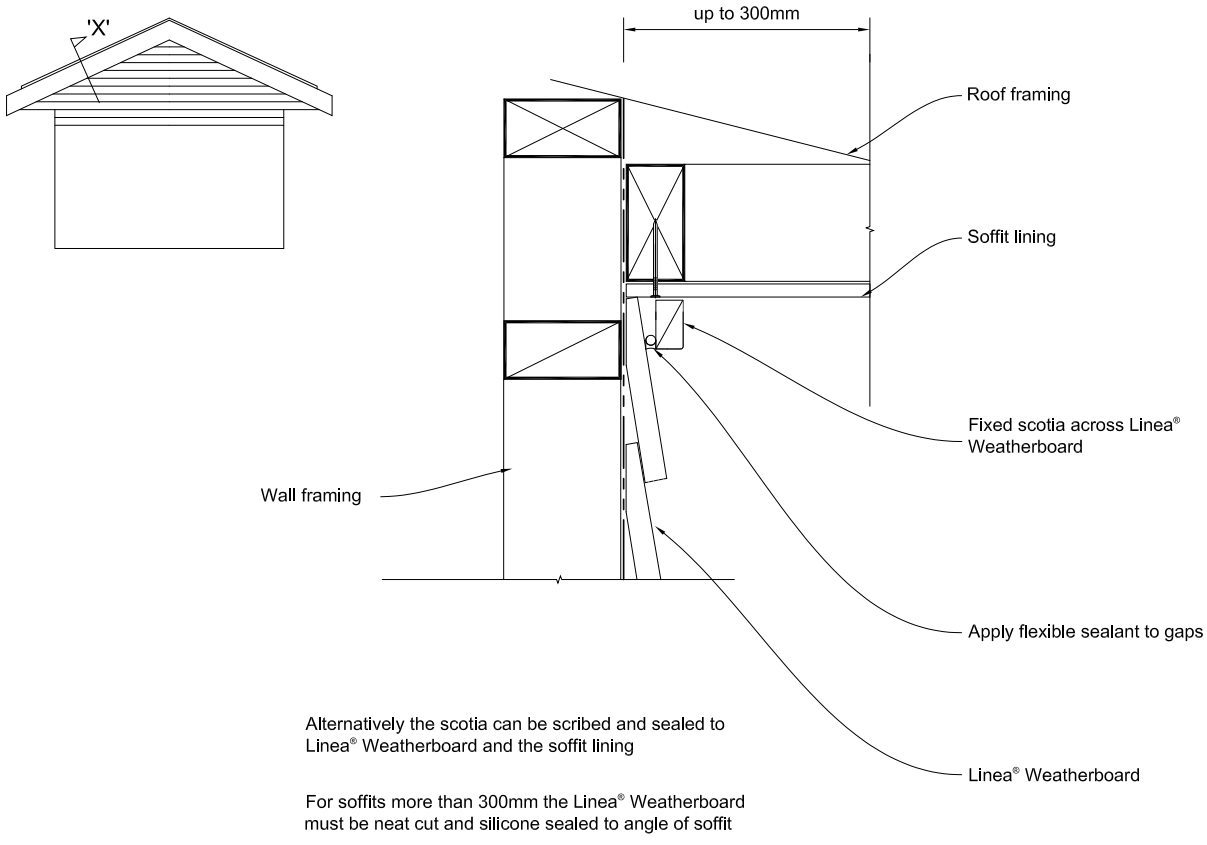

ABA20220988
APPROVED - Site Copy
Hastings District Council
20/09/2022

Figure 26: Enclosed deck

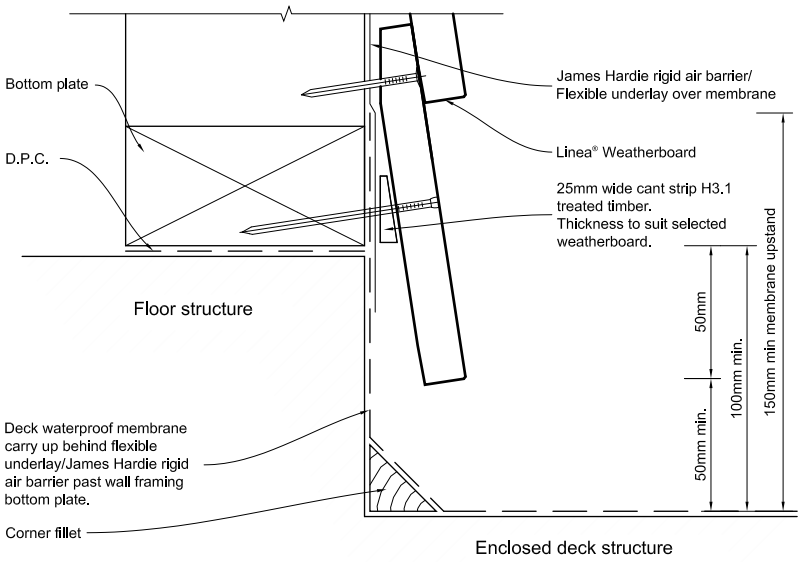

Figure 27: Timber cavity batten fixing

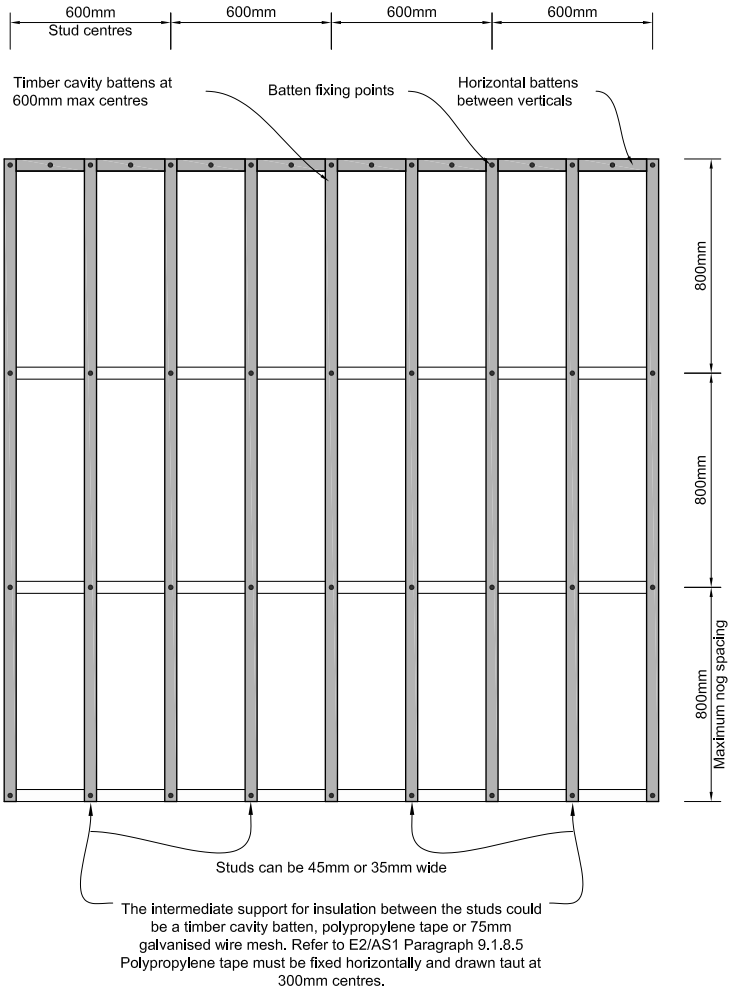

ABA20220988
APPROVED - Site Copy
Hastings District Council
20/09/2022

Figure 28: Timber cavity foundation detail

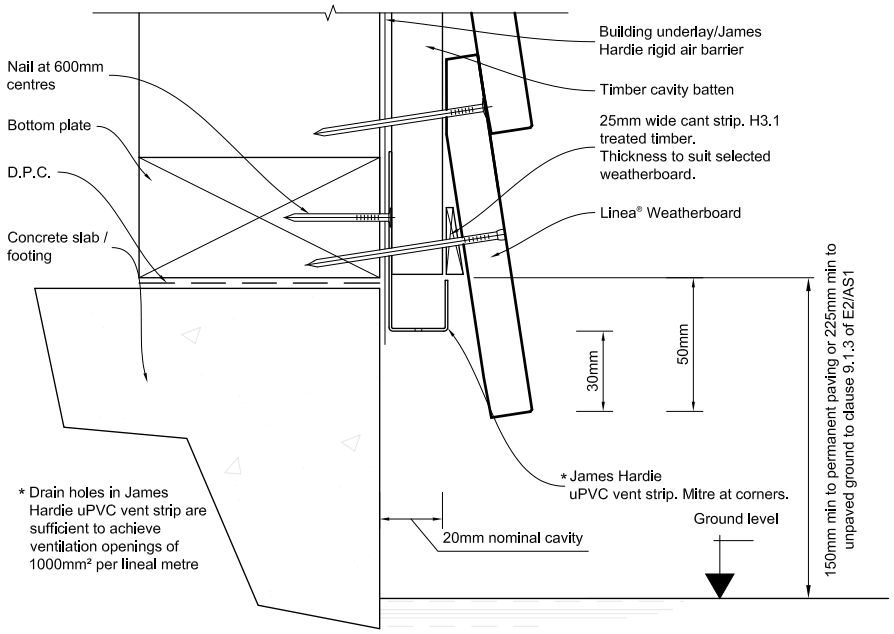

Figure 29: Timber cavity soffit detail

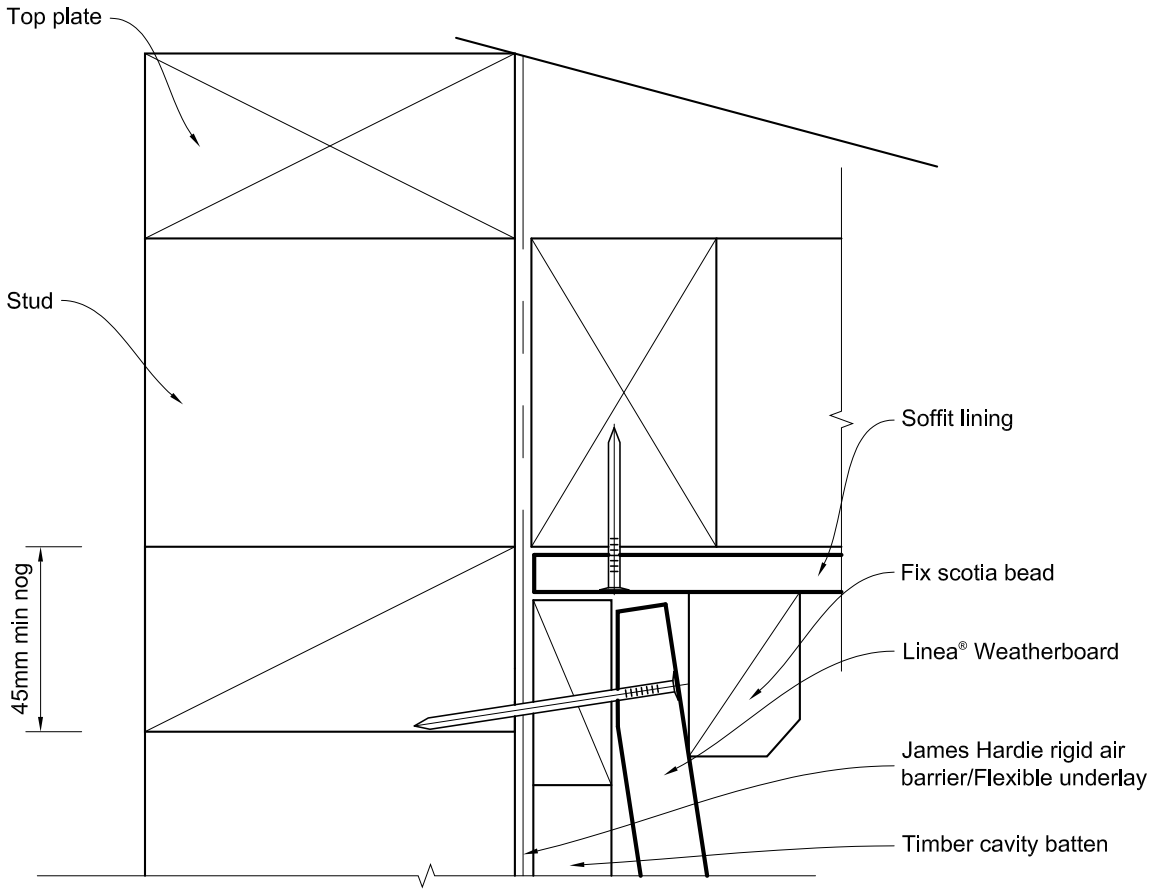

ABA20220988
APPROVED - Site Copy
Hastings District Council
20/09/2022

Figure 30: Timber cavity weatherboard fixing

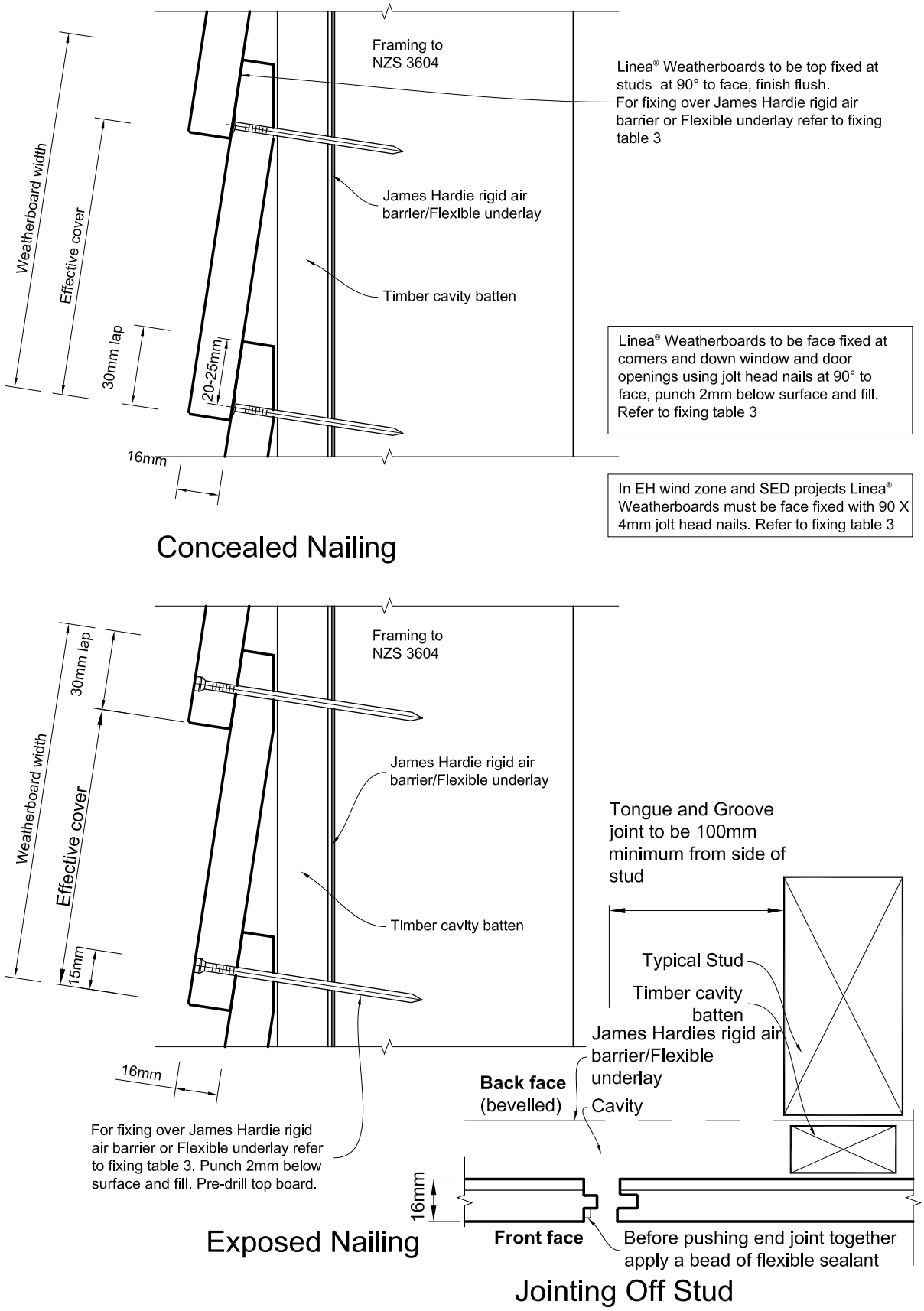

ABA20220988
APPROVED - Site Copy
Hastings District Council
20/09/2022

Figure 31: Timber cavity boxed corner

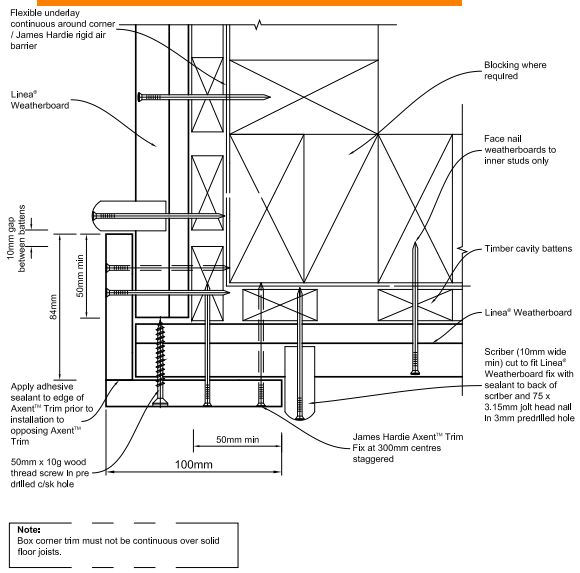

Figure 32: Timber cavity mitre corner

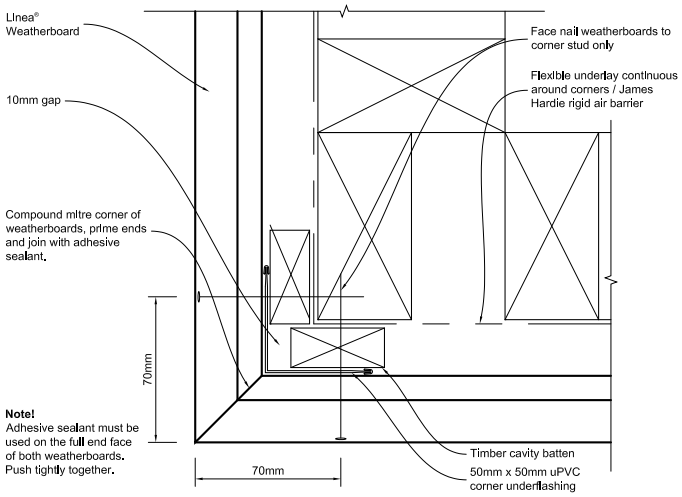

Figure 33: Timber cavity aluminium box corner

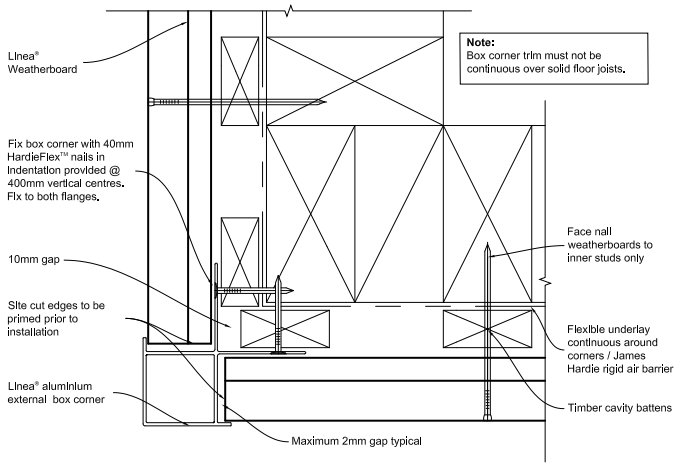

ABA20220988
APPROVED - Site Copy
Hastings District Council
20/09/2022

Figure 34: Timber cavity external corner soaker

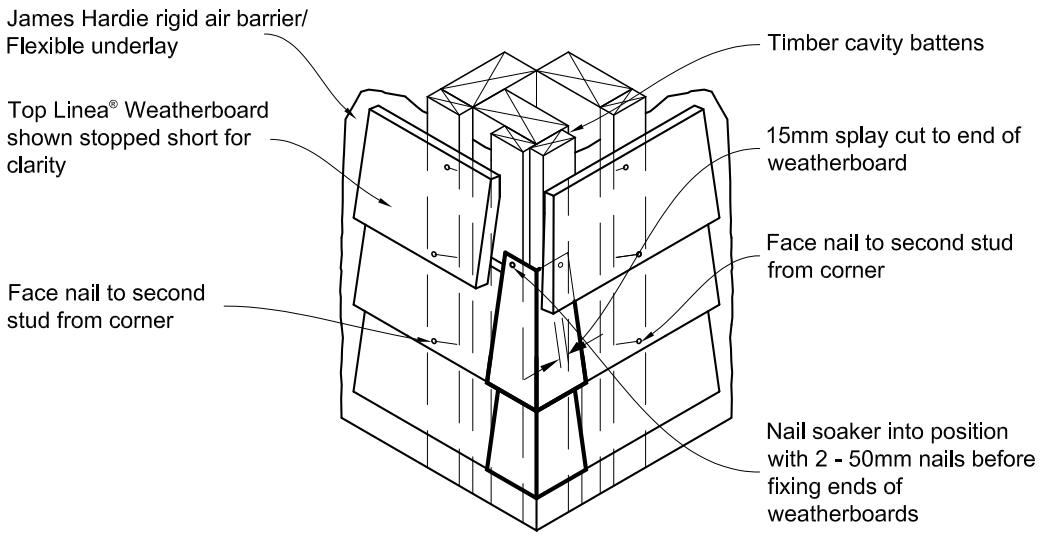

Soaker material	Nail material
Copper	Copper or phosphor bronze
Aluminium	Hot dip galvanised
Stainless steel	Stainless steel

Figure 35: Timber cavity internal corner

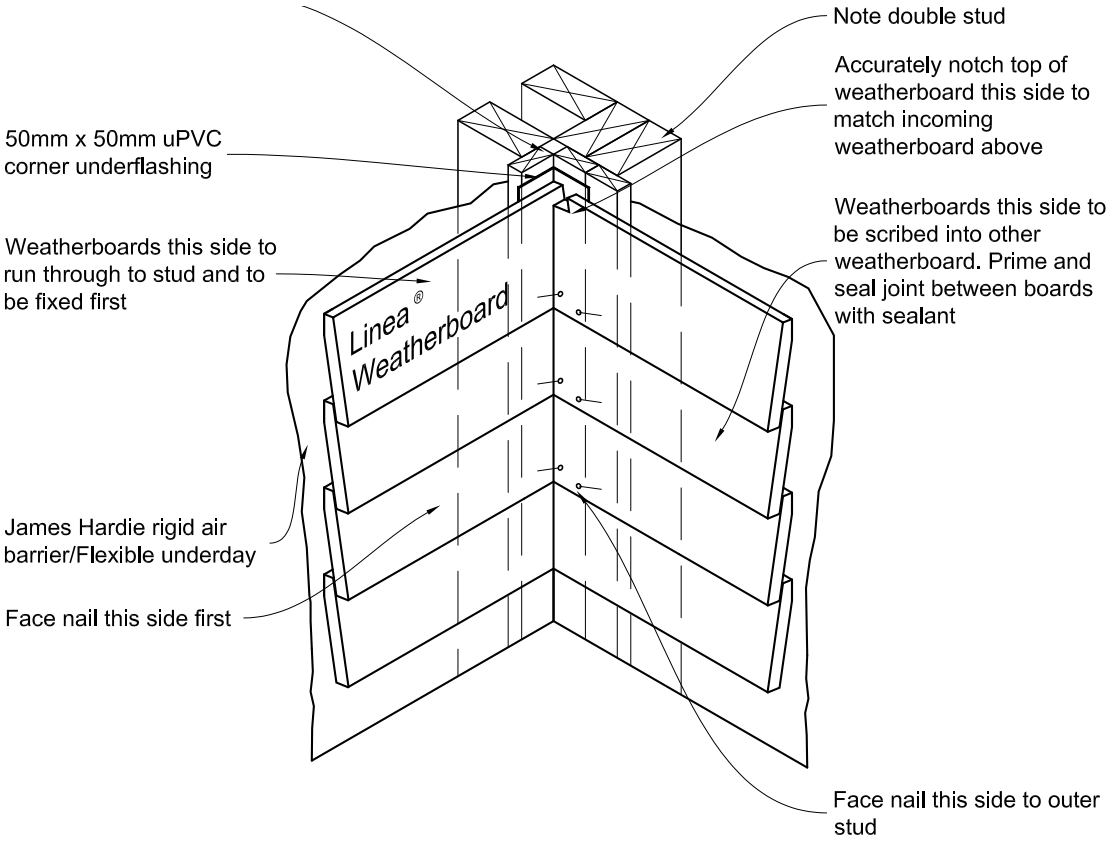

ABA20220988
APPROVED - Site Copy
Hastings District Council
20/09/2022

Figure 36: Timber cavity internal 90° aluminium 'W' mould corner

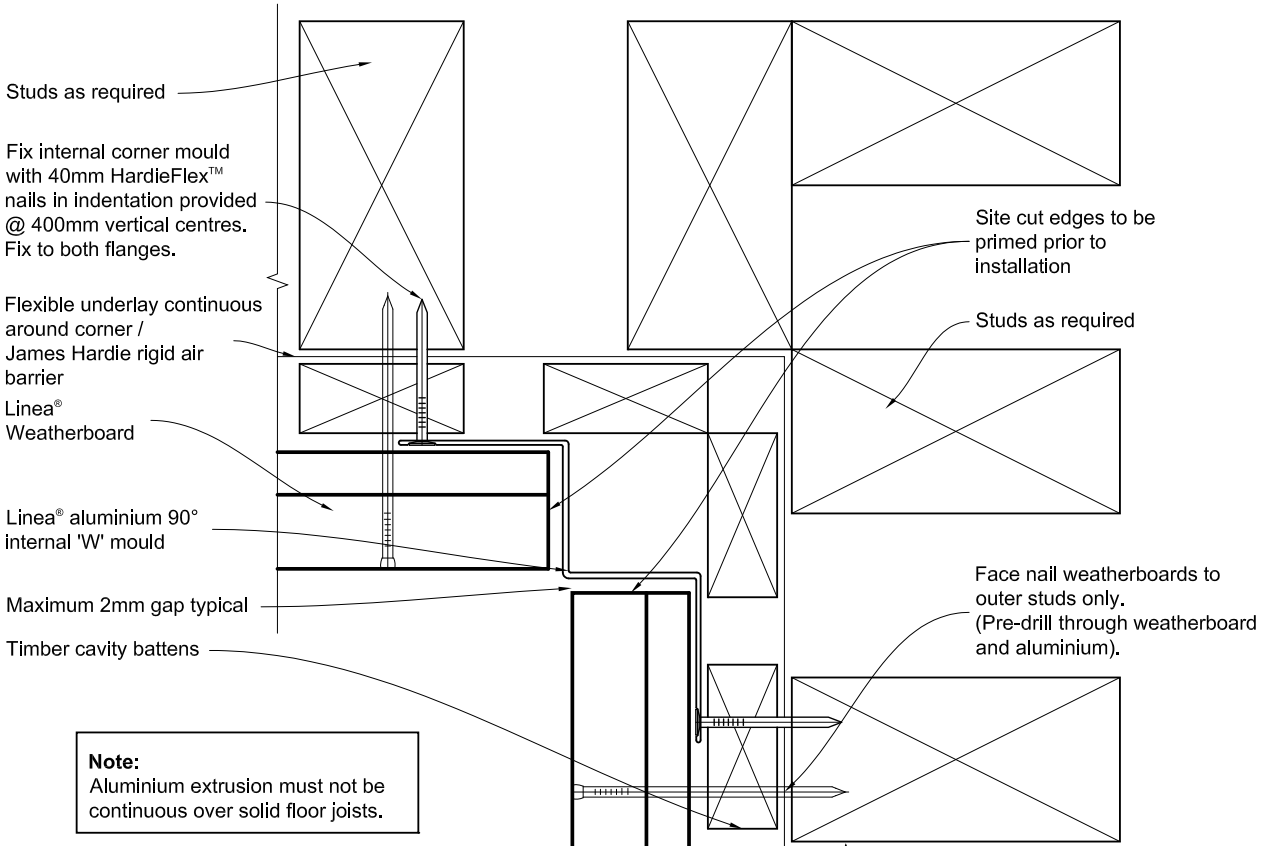

Figure 37: Timber cavity internal 135° aluminium 'W' mould corner

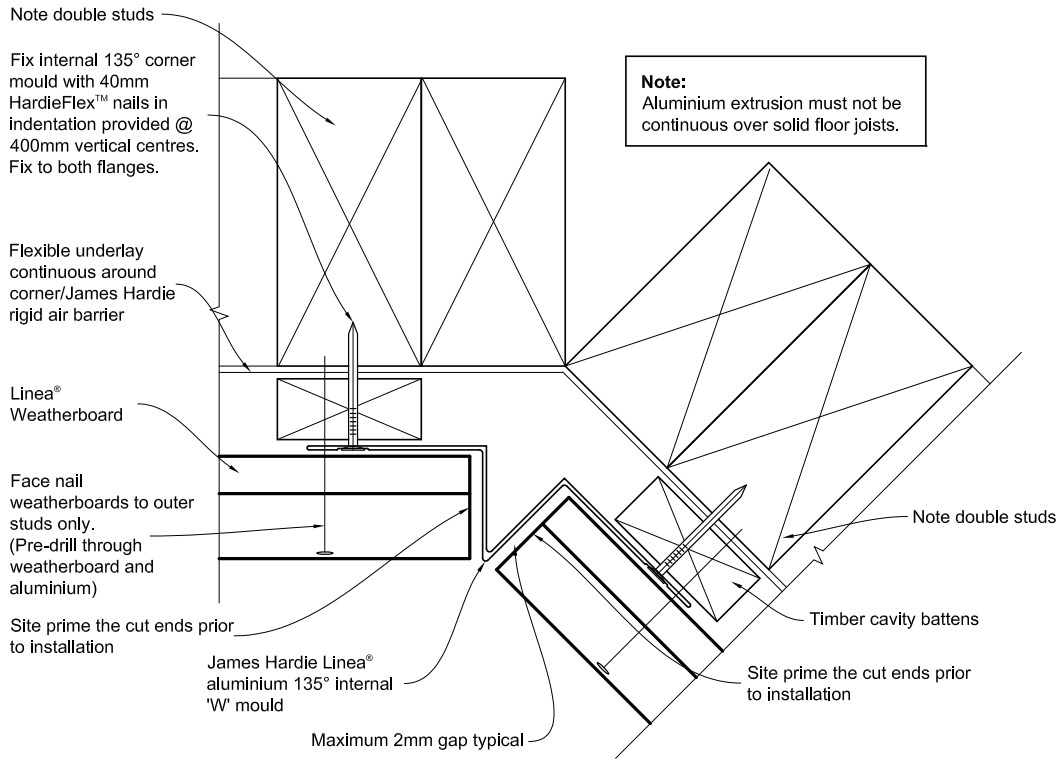

ABA20220988
APPROVED - Site Copy
Hastings District Council
20/09/2022

Figure 38: Timber cavity batten layout at window opening

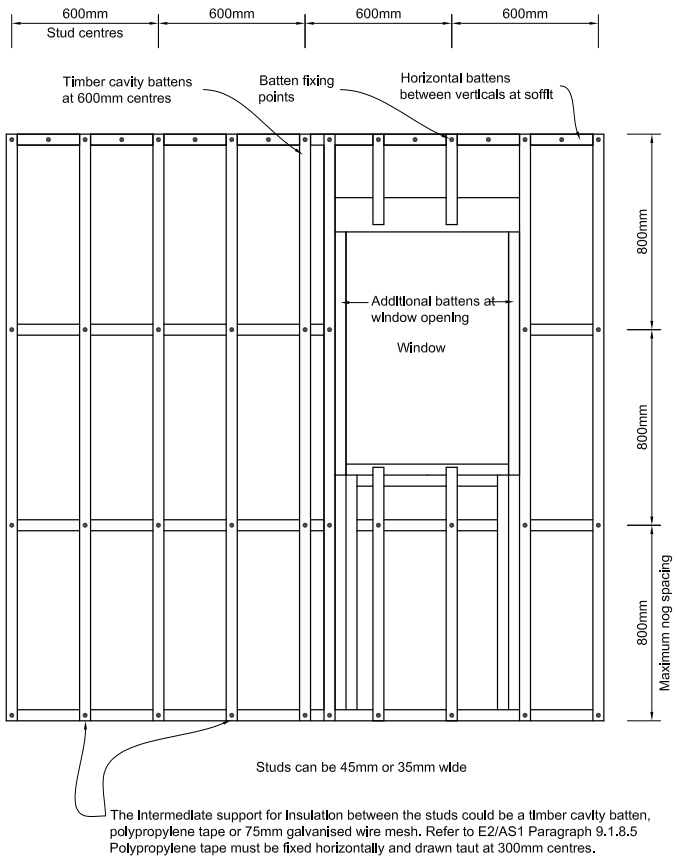

Figure 39: Timber cavity window sill with facings

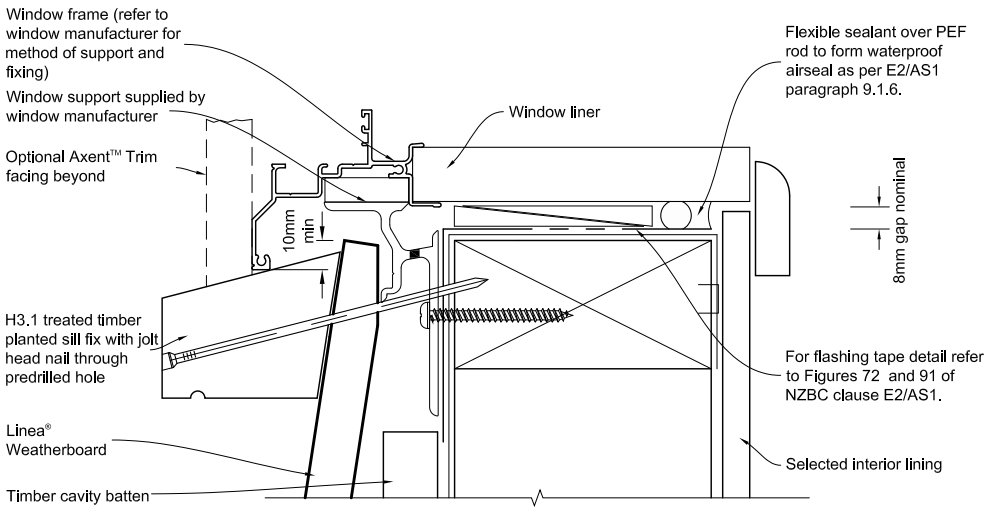

General notes for materials section

1. Flashing materials must be selected based on environmental exposure, refer to NZS 3604 and Table 20 of NZBC clause E2/AS1.
2. Flexible underlay must comply with acceptable solution E2/AS1.
3. Flashing tape must have proven compatibility with the selected flexible underlay / James Hardie rigid air barrier and other materials with which it comes into contact.

Refer to the manufacturer or supplier for technical information for these materials.

ABA20220988
APPROVED - Site Copy
Hastings District Council
20/09/2022

Figure 40: Timber cavity window and door head with facings

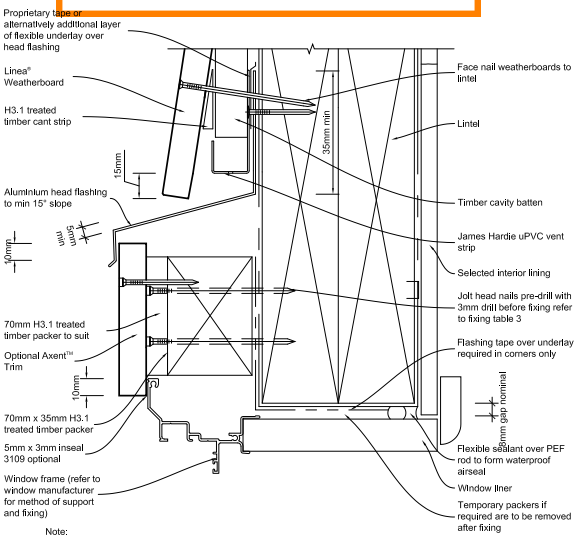

Note:
- When James Hardie rigid air barrier is used flashing tape to be applied to the entire window opening.
- Sealant must be installed between head flashing and trim in VH and EH wind zones and SED pressures.
- Alternatively, the head flashings can be formed with stop ends as per E2/AS1

Figure 41: Timber cavity window and door jamb with facings

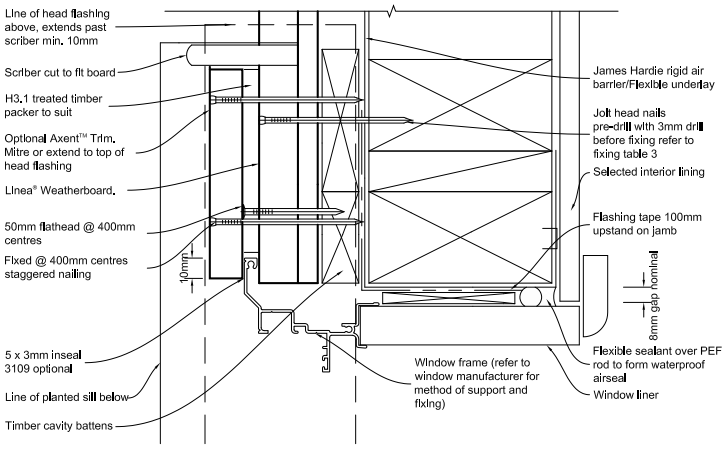

Note:
When James Hardie rigid air barrier is used flashing tape to be applied to the entire window opening.

Figure 42: Timber cavity window and door sill without facings

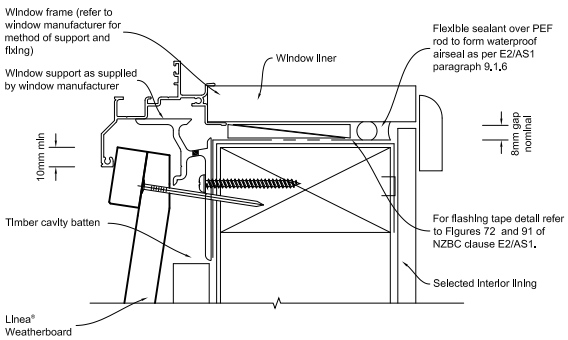

General notes for materials selection

1. Flashing materials must be selected based on environmental exposure, refer to NZS 3604 and Table 20 of NZBC clause E2/AS1.
2. Flexible underlay must comply with acceptable solution E2/AS1.
3. Flashing tape must have proven compatibility with the selected flexible underlay / James Hardies rigid air barrier and other materials with which it comes into contact.
4. Sill support bars must comply with EM6, E2/VM1 and B2/AS1

Refer to the manufacturer or supplier for technical information for these materials.

ABA20220988
APPROVED - Site Copy
Hastings District Council
20/09/2022

Figure 43: Timber cavity window and door head without facings

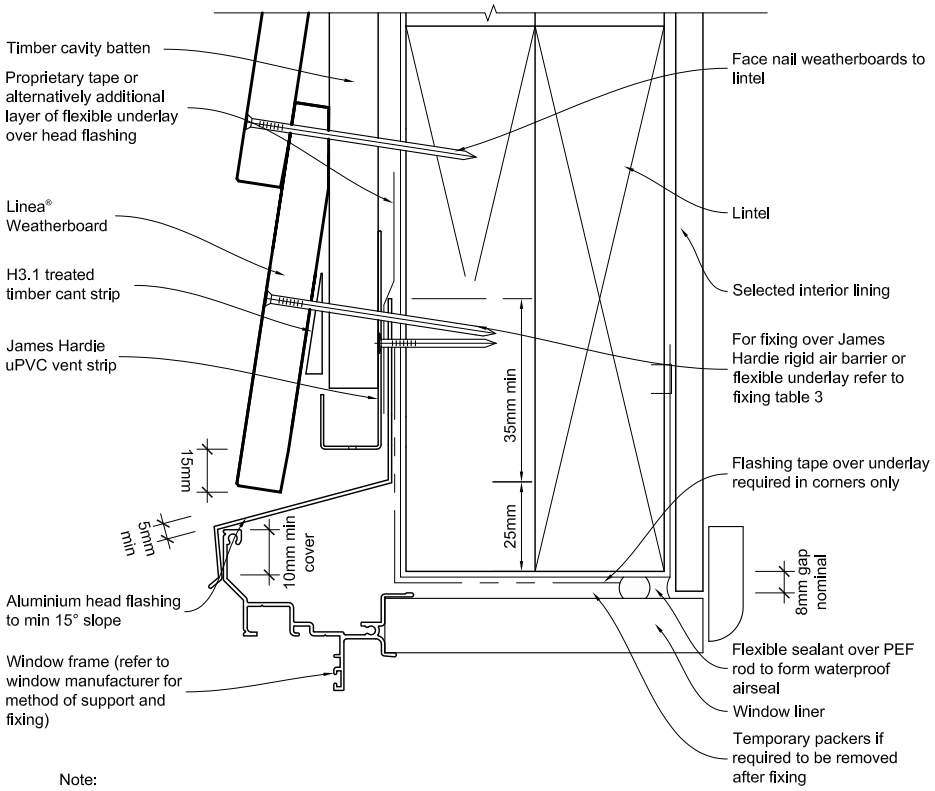

Note:

- When James Hardie rigid air barrier is used flashing tape to be applied to the entire window opening.
- Sealant must be installed between head flashing and flashing and trim in VH and EH wind zones and SED projects.
- Alternatively, the head flashings can be formed with stop ends as per E2/AS1

Figure 44: Timber cavity window and door jamb without facings

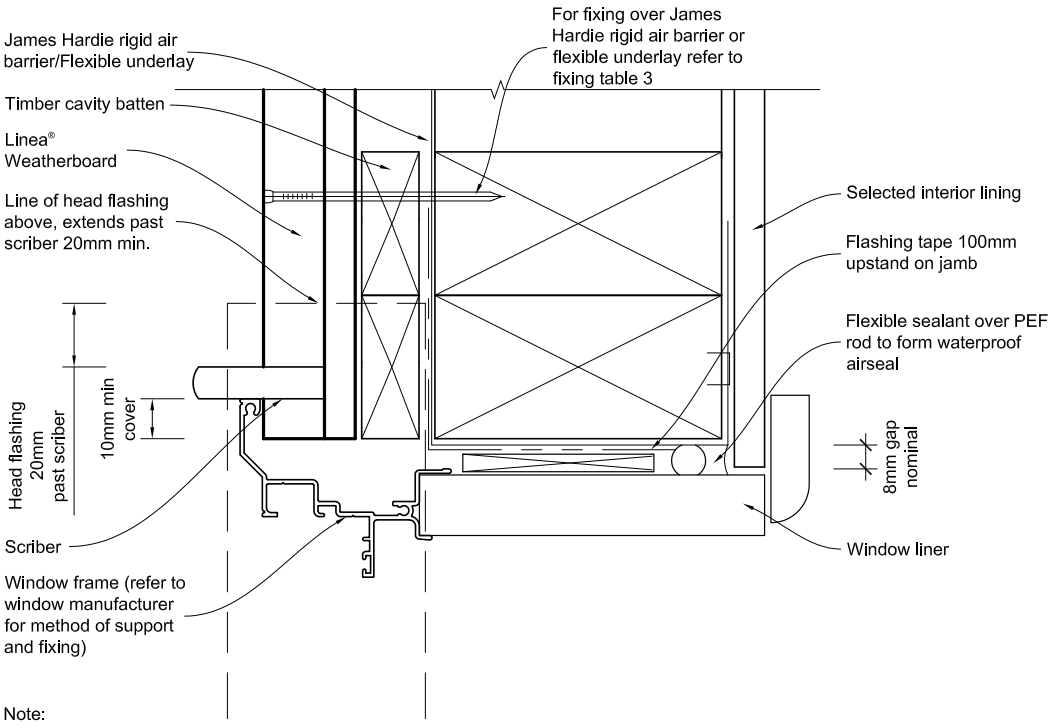

Note:
When James Hardie rigid air barrier is used flashing tape to be applied to the entire window opening.

ABA20220988
APPROVED - Site Copy
Hastings District Council
20/09/2022

Figure 45: Timber cavity head flashing termination

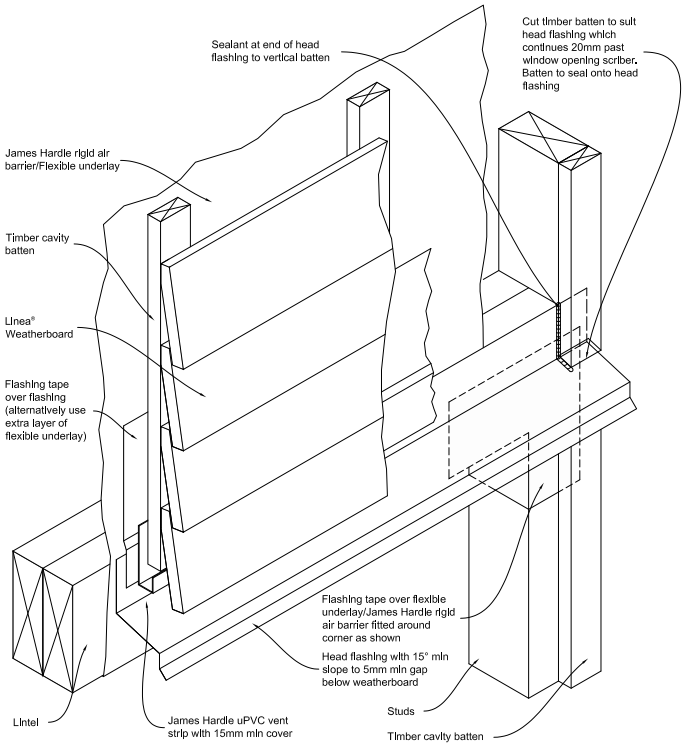

Note:
When James Hardie rigid air barrier is used flashing tape to be applied to the entire window opening.

Figure 46: Timber cavity one piece apron flashing joint

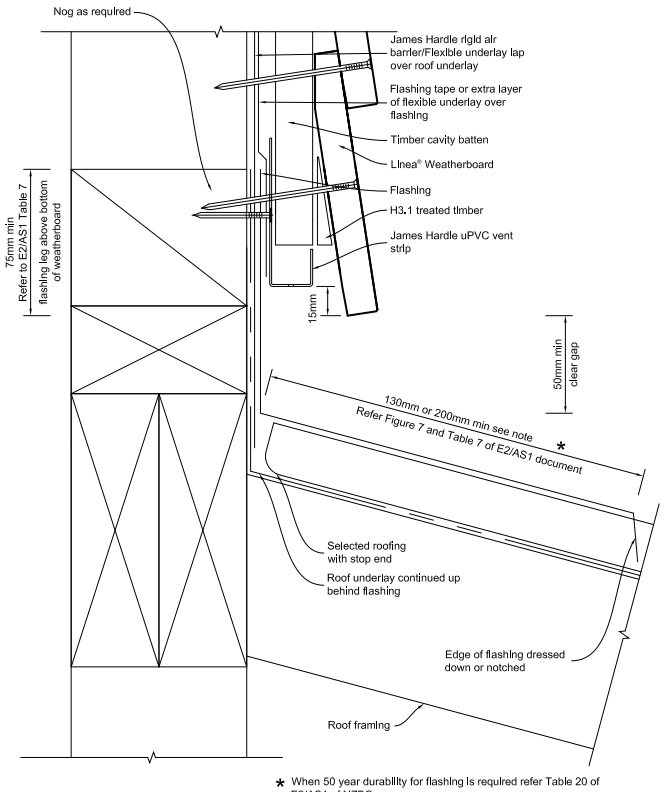

* When 50 year durability for flashing is required refer Table 20 of E2/AS1 of NZBC.

Vertical Section

ABA20220988
APPROVED - Site Copy
Hastings District Council
20/09/2022

Figure 47: Timber cavity one piece gutter/wall junction

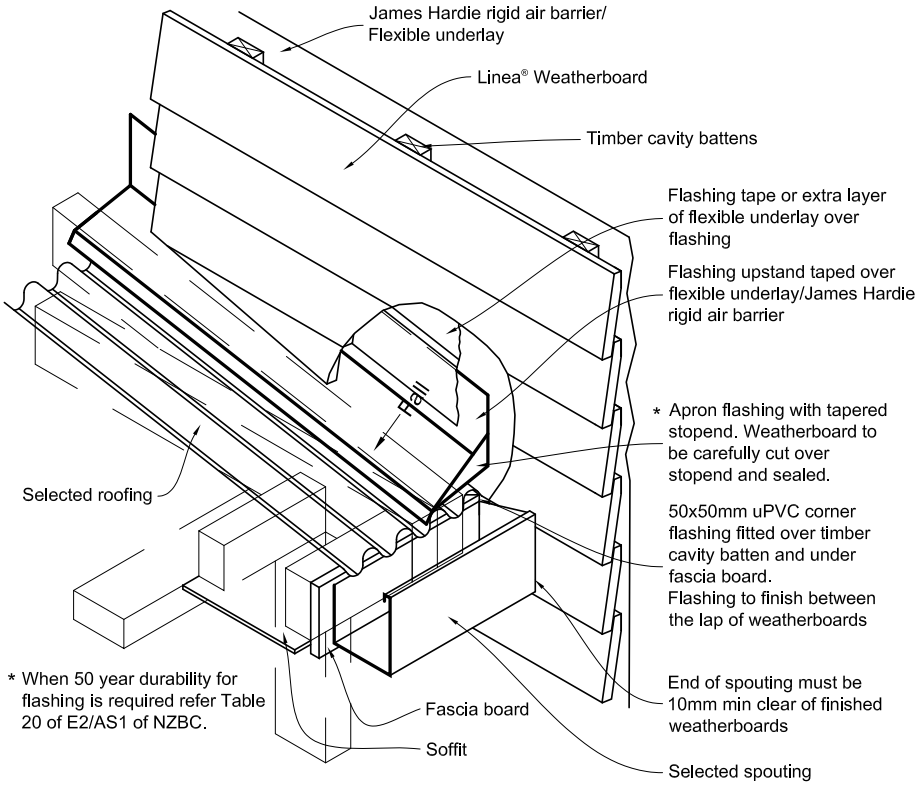

Figure 48: Timber cavity pipe penetration

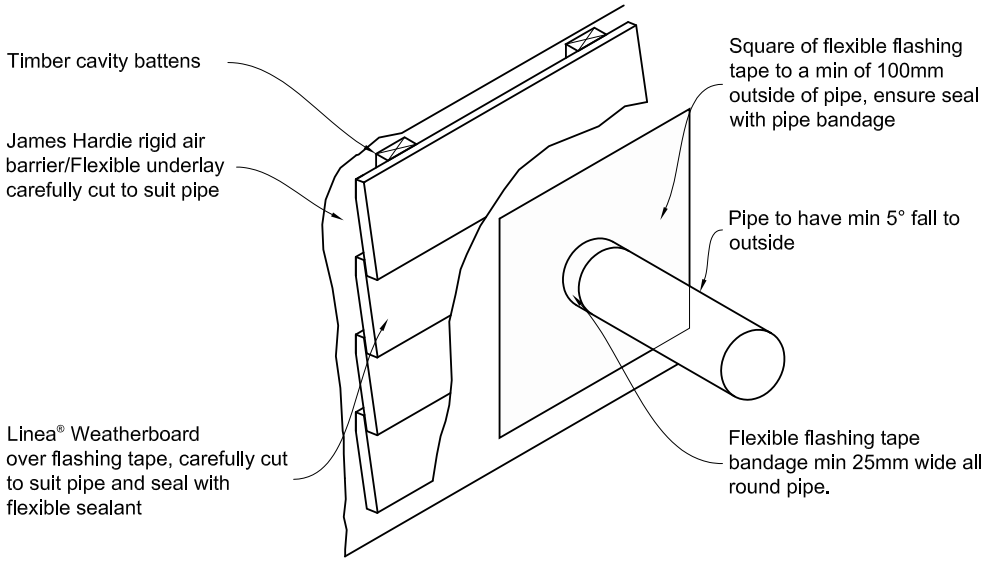

ABA20220988
APPROVED - Site Copy
Hastings District Council
20/09/2022

Figure 49: Timber cavity meter box at head

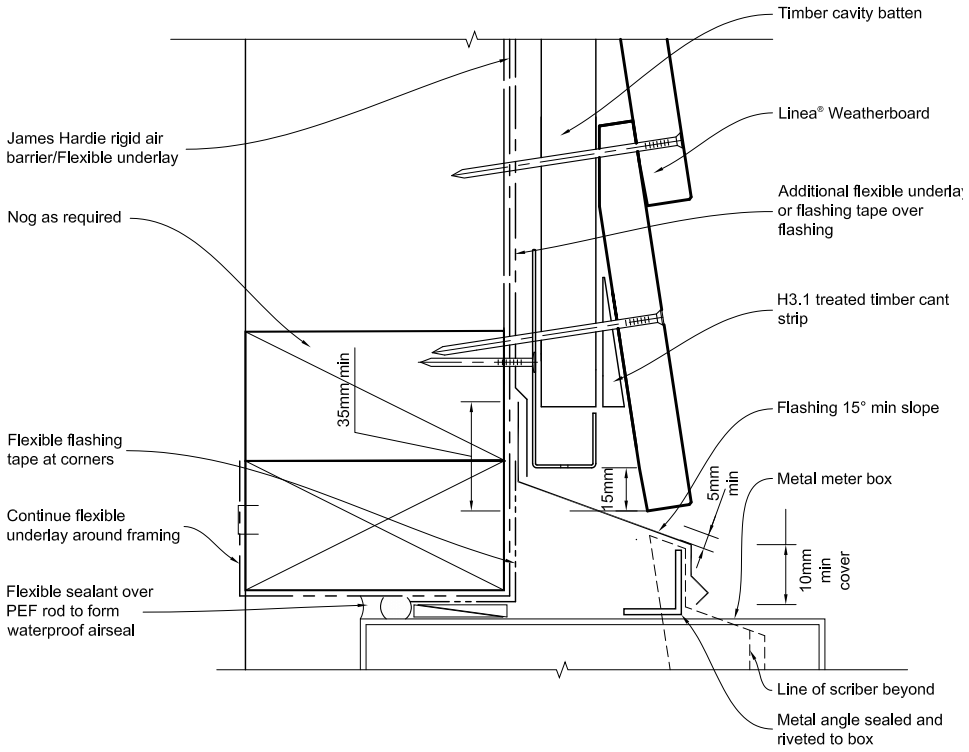

Note:
When James Hardie rigid air barrier is used flashing tape to be applied to the entire opening.

Figure 50: Timber cavity meter box at sill

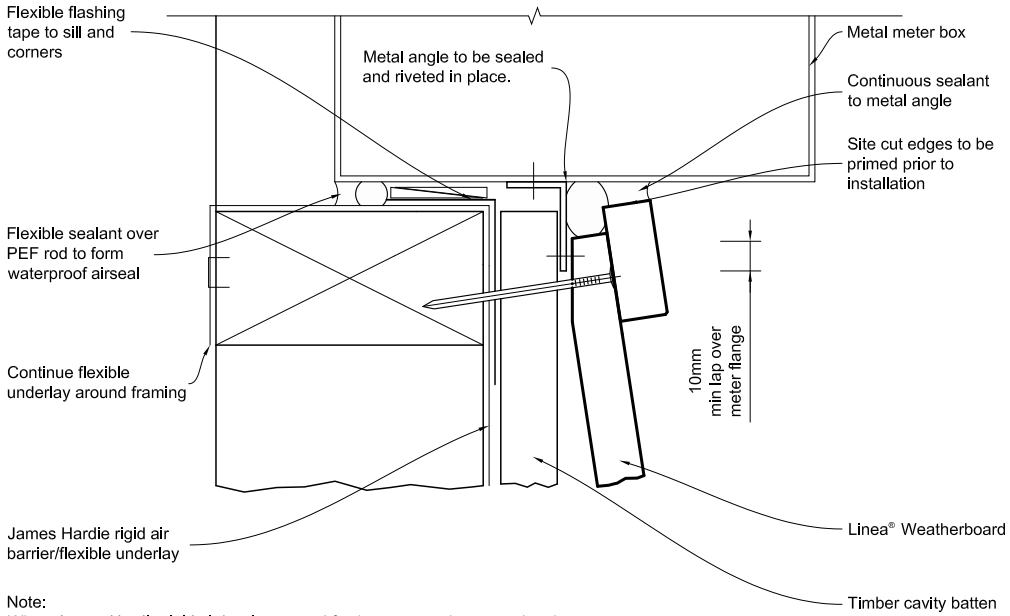

Note:
When James Hardie rigid air barrier is used flashing tape to be applied to the entire opening.

ABA20220988
APPROVED - Site Copy
Hastings District Council
20/09/2022

Figure 51: Timber cavity meter box head flashing at jamb

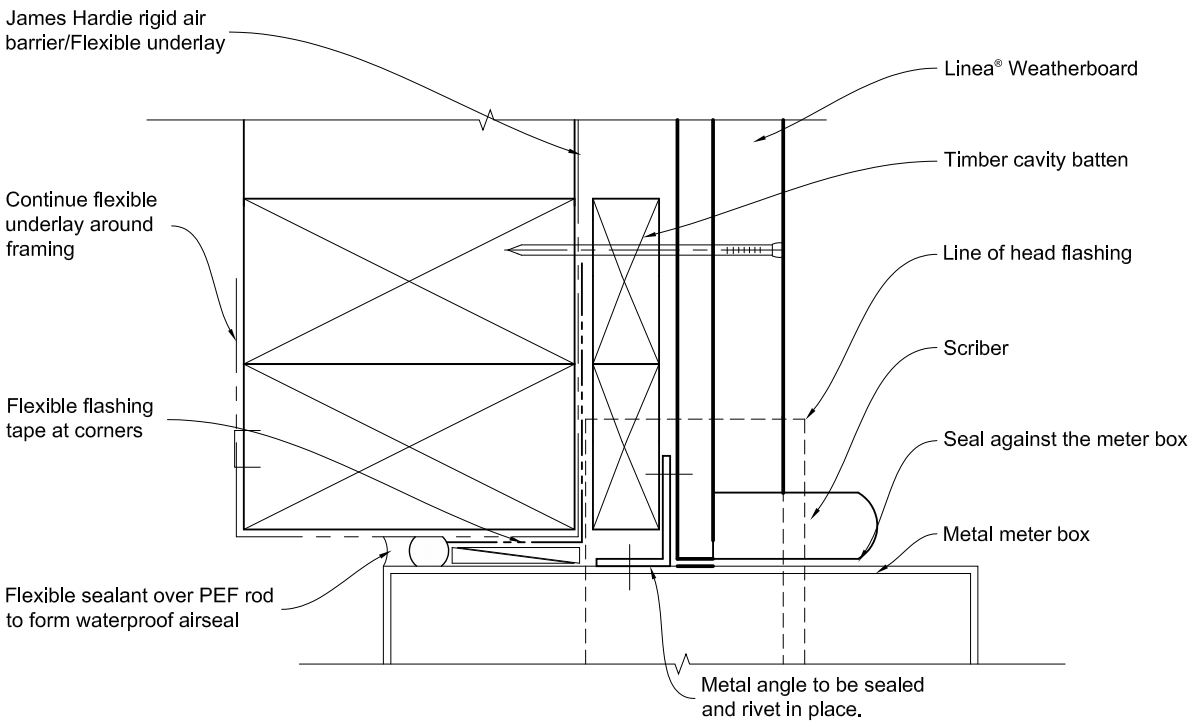

Note:
When James Hardie rigid air barrier is used flashing tape to be applied to the entire opening.

ABA20220988
APPROVED - Site Copy
Hastings District Council
20/09/2022

Figure 52: Timber cavity fix meter box

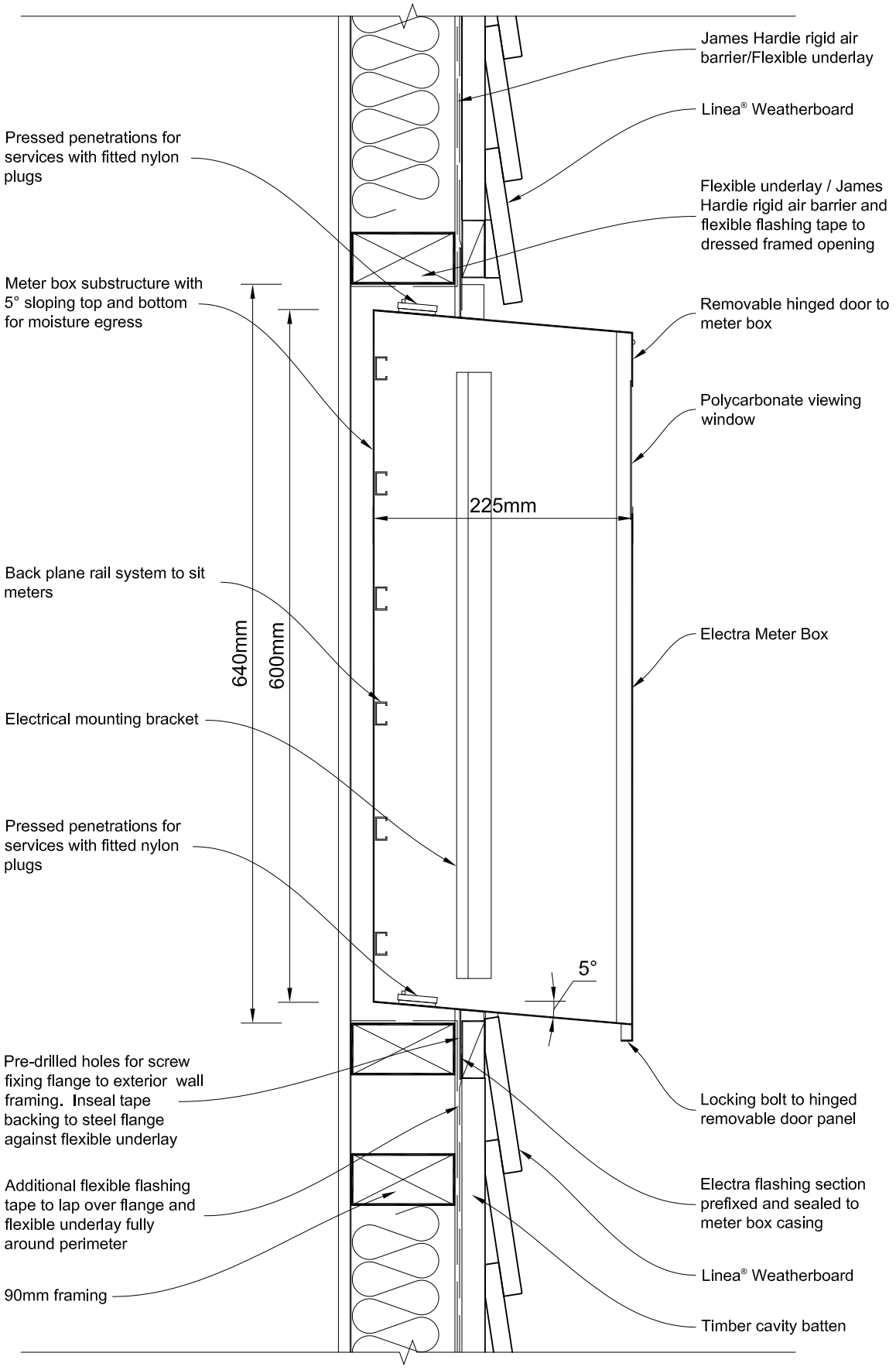

ABA20220988
APPROVED - Site Copy
Hastings District Council
20/09/2022

Figure 53: Floating lap over floor joist

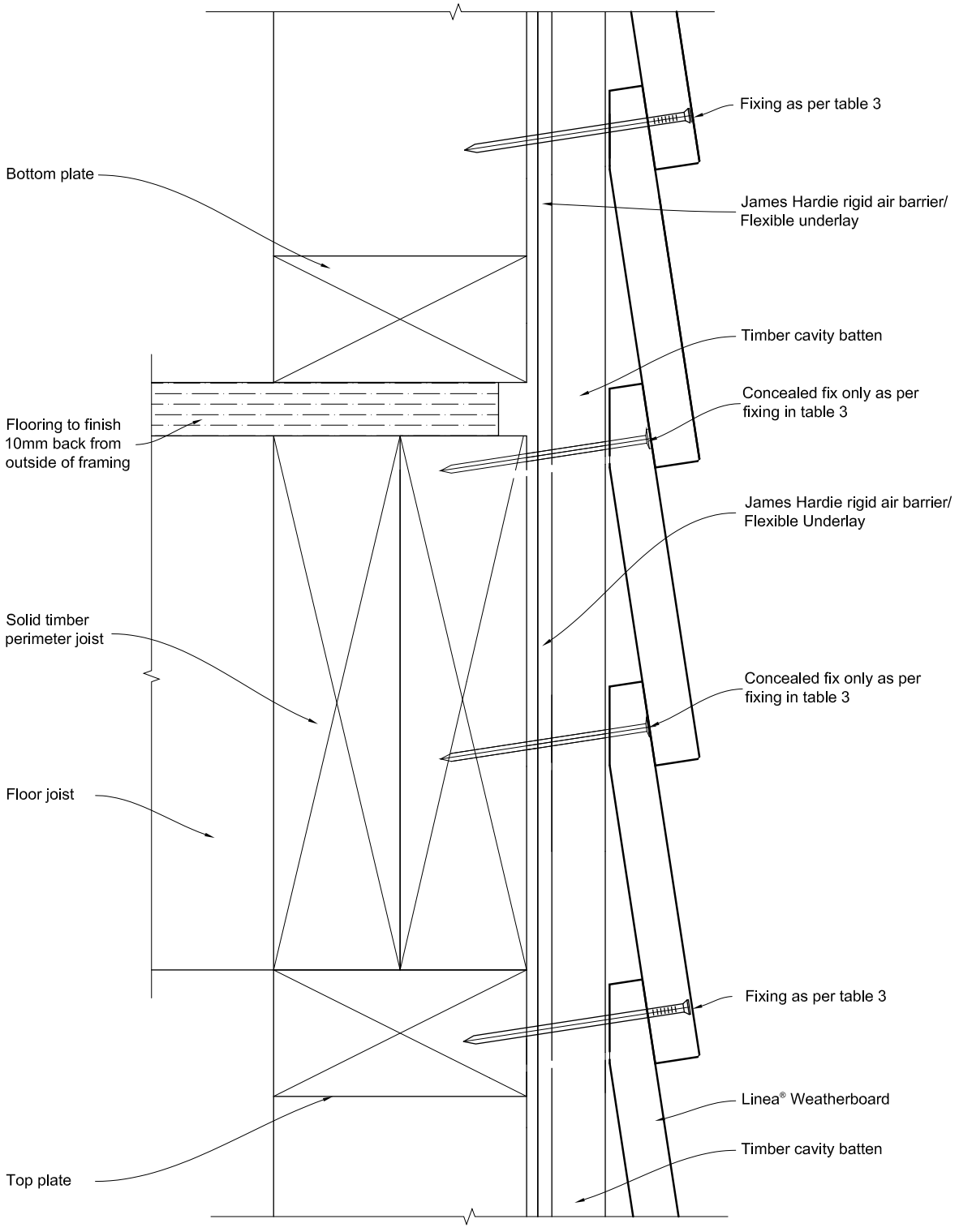

Vertical Section

ABA20220988
APPROVED - Site Copy
Hastings District Council
20/09/2022

Figure 54: Timber cavity drainage joint

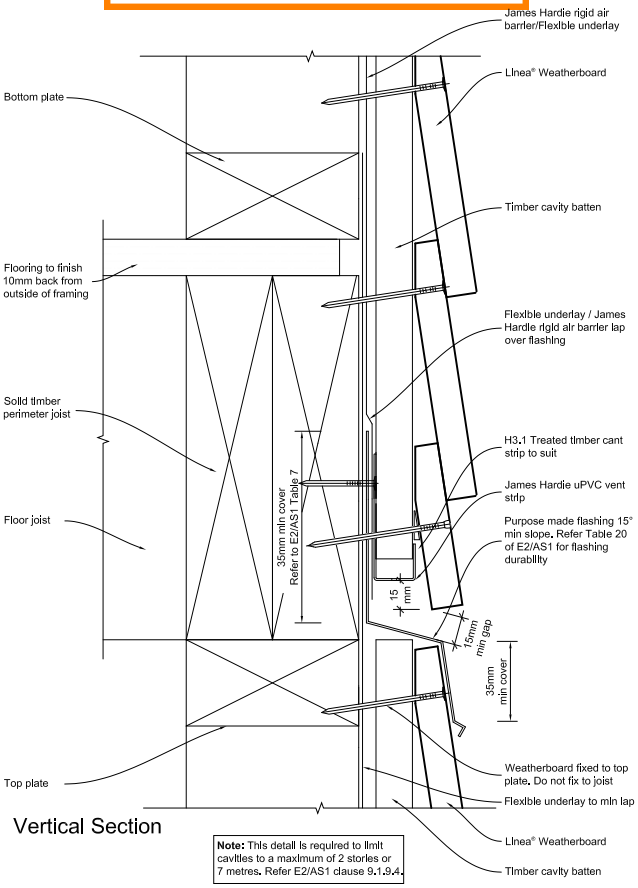

Figure 55: Timber cavity enclosed balustrade to wall

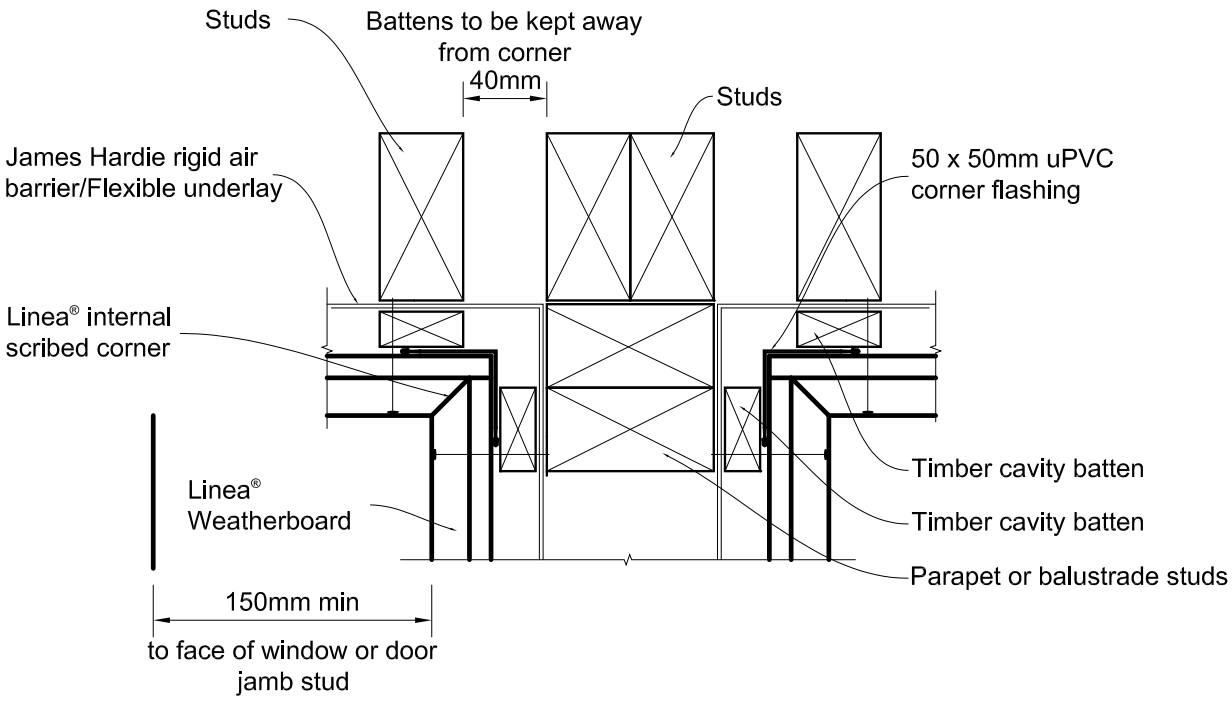

ABA20220988
APPROVED - Site Copy
Hastings District Council
20/09/2022

Figure 56: Timber cavity enclosed balustrade to wall

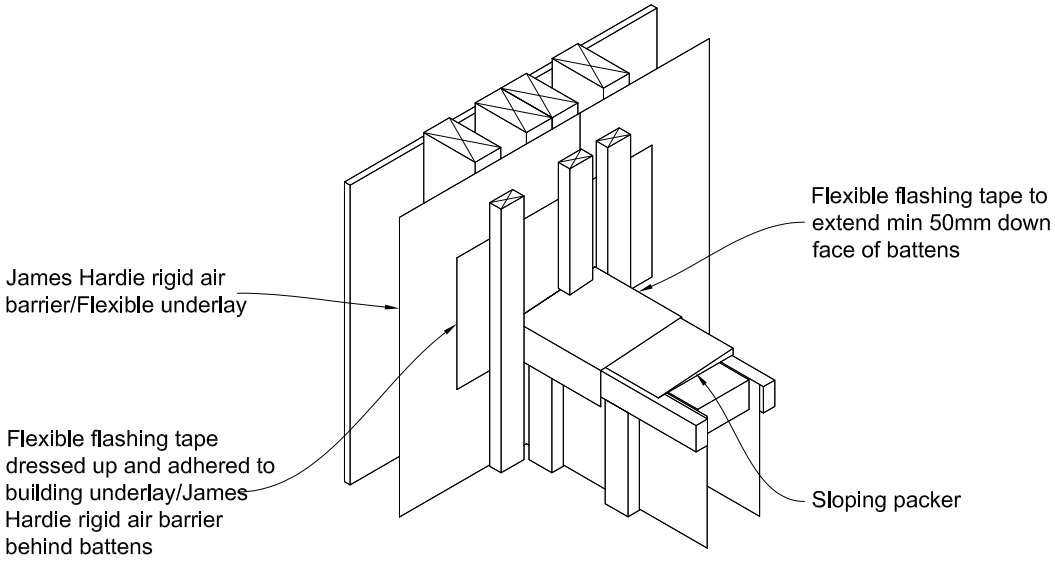

Flashing Tape Application Prior to Metal Flashing Fixing

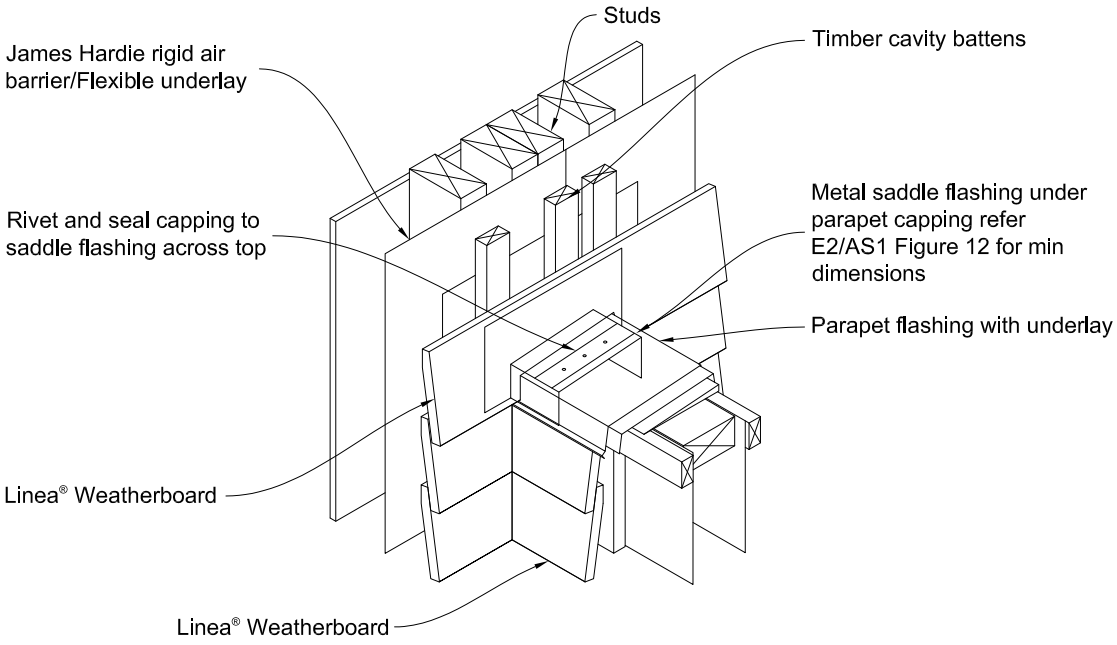

ABA20220988
APPROVED - Site Copy
Hastings District Council
20/09/2022

Figure 57: Timber cavity at enclosed deck

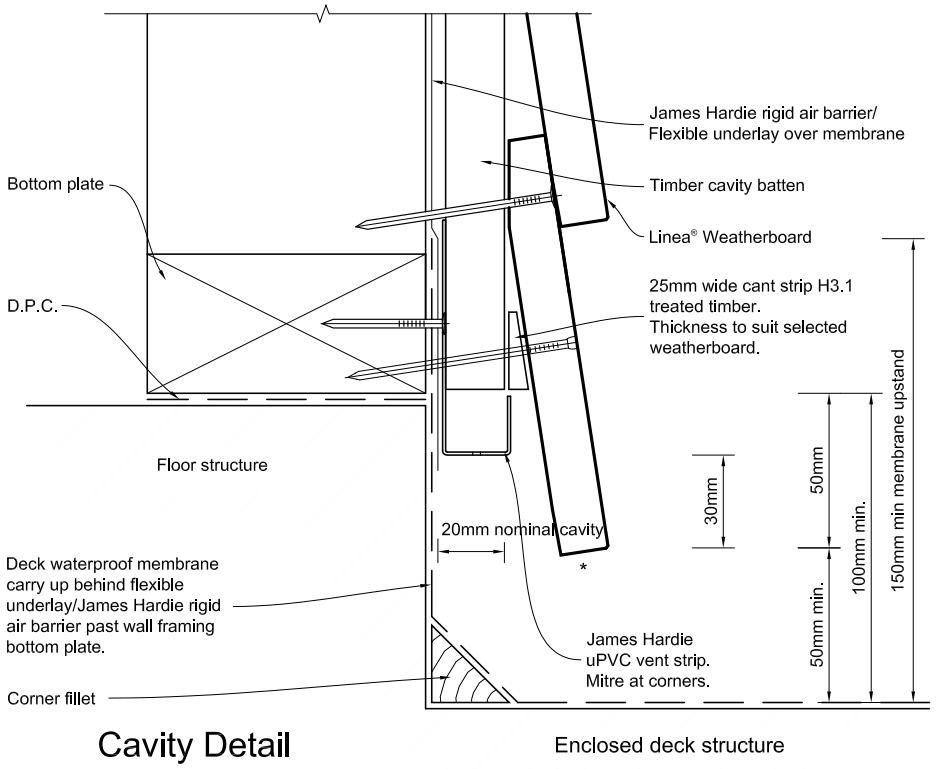

* Drain holes in James Hardie uPVC vent strip are sufficient to achieve ventilation openings of 1000mm² per lineal metre

Figure 58: Timber cavity parapet flashing

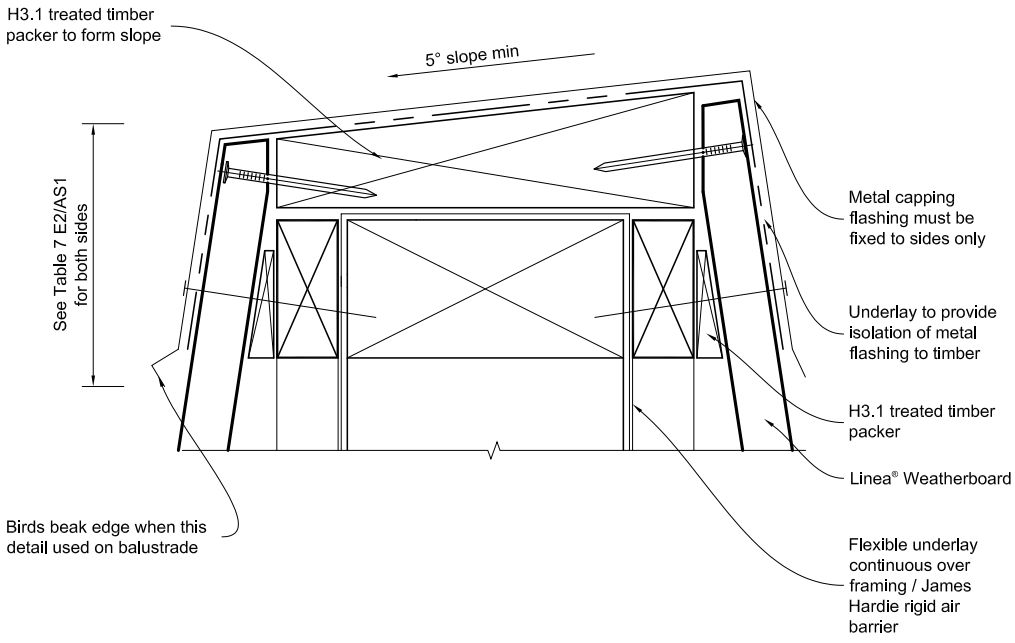

ABA20220988
APPROVED - Site Copy
Hastings District Council
20/09/2022

Figure 59: Linea™ Weatherboard junction (section 'X') cavity to cable

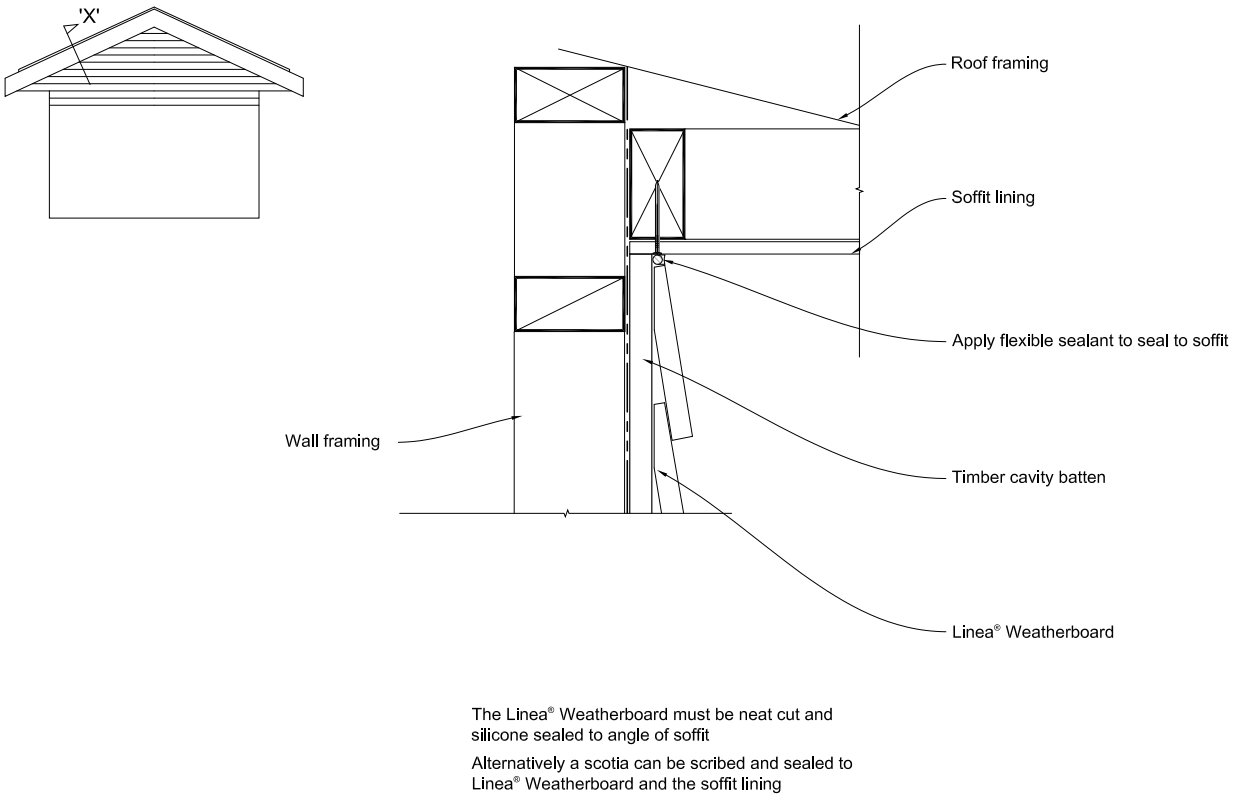

The Linea® Weatherboard must be neat cut and silicone sealed to angle of soffit

Alternatively a scotia can be scribed and sealed to Linea® Weatherboard and the soffit lining

Figure 60: Linea™ Weatherboard sloping soffit and wall junction

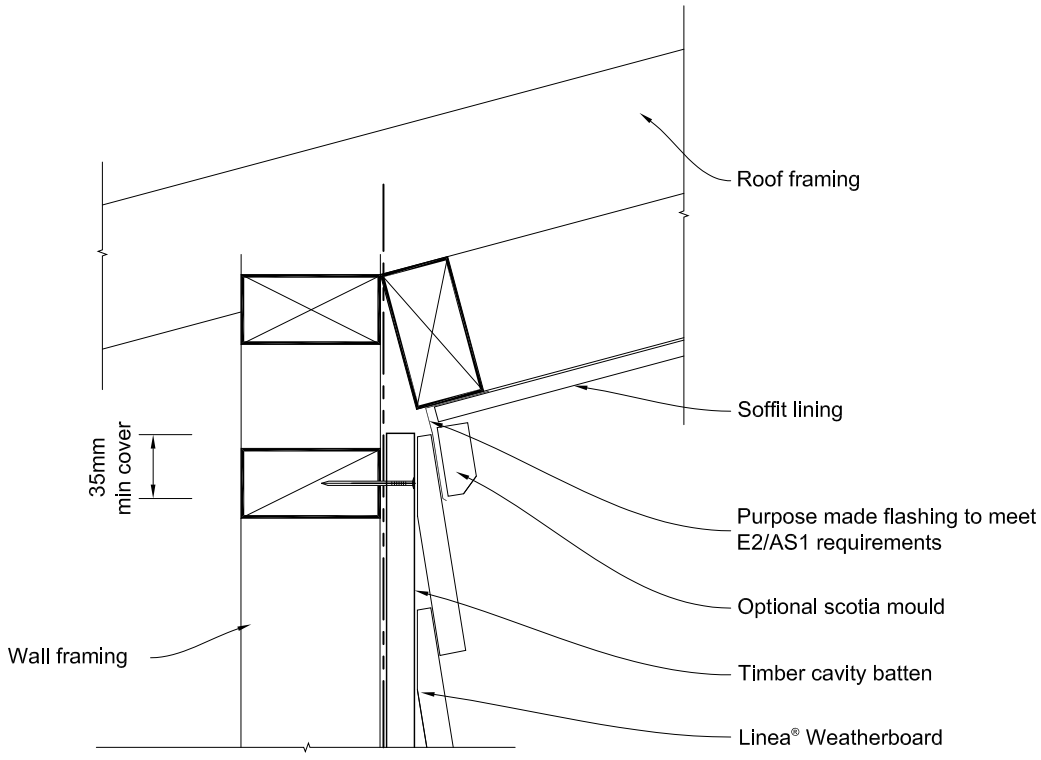

ABA20220988
APPROVED - Site Copy
Hastings District Council
20/09/2022

Figure 61: Timber cavity cantilevered timber deck junction

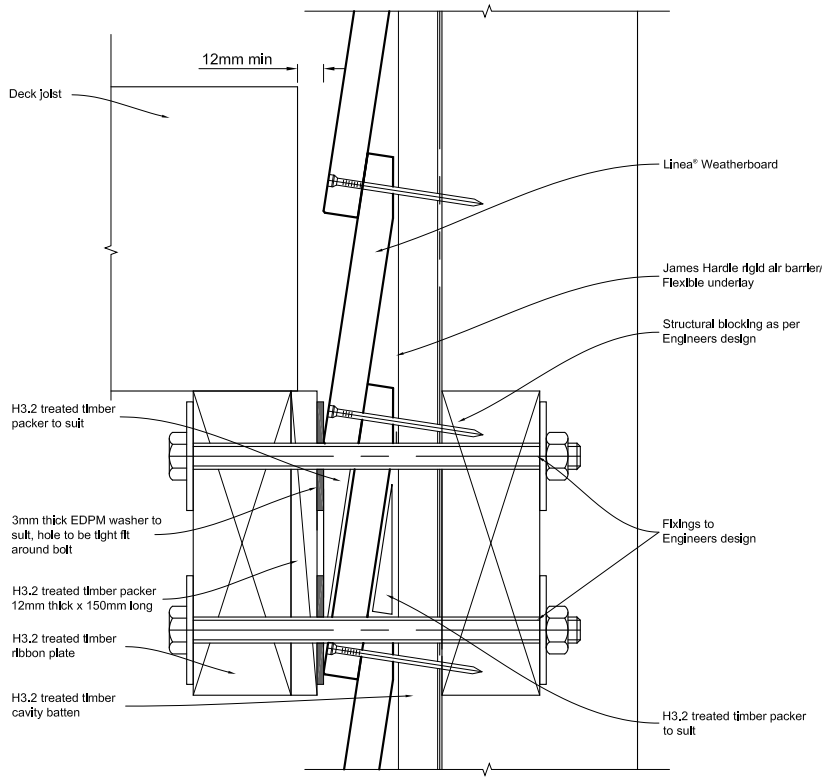

Figure 62: Linea™ Weatherboard timber cavity cantilevered timber deck junction

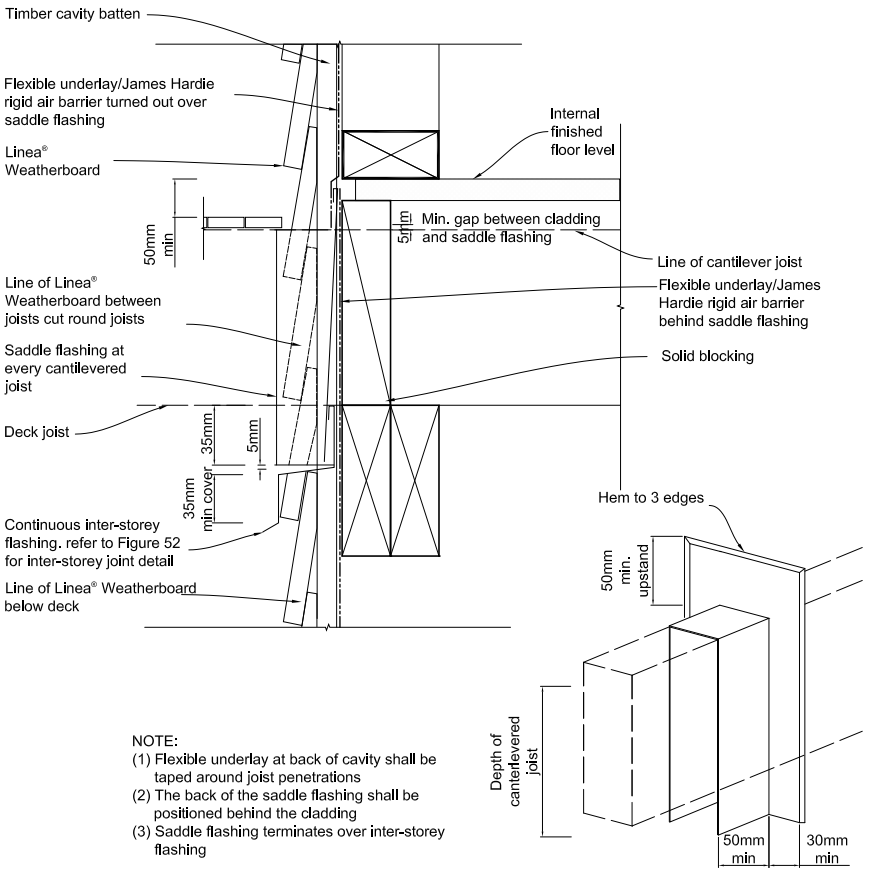

NOTE:
(1) Flexible underlay at back of cavity shall be taped around joist penetrations
(2) The back of the saddle flashing shall be positioned behind the cladding
(3) Saddle flashing terminates over inter-storey flashing

ABA20220988
APPROVED - Site Copy
Hastings District Council
20/09/2022

Figure 63: Door sill support detail

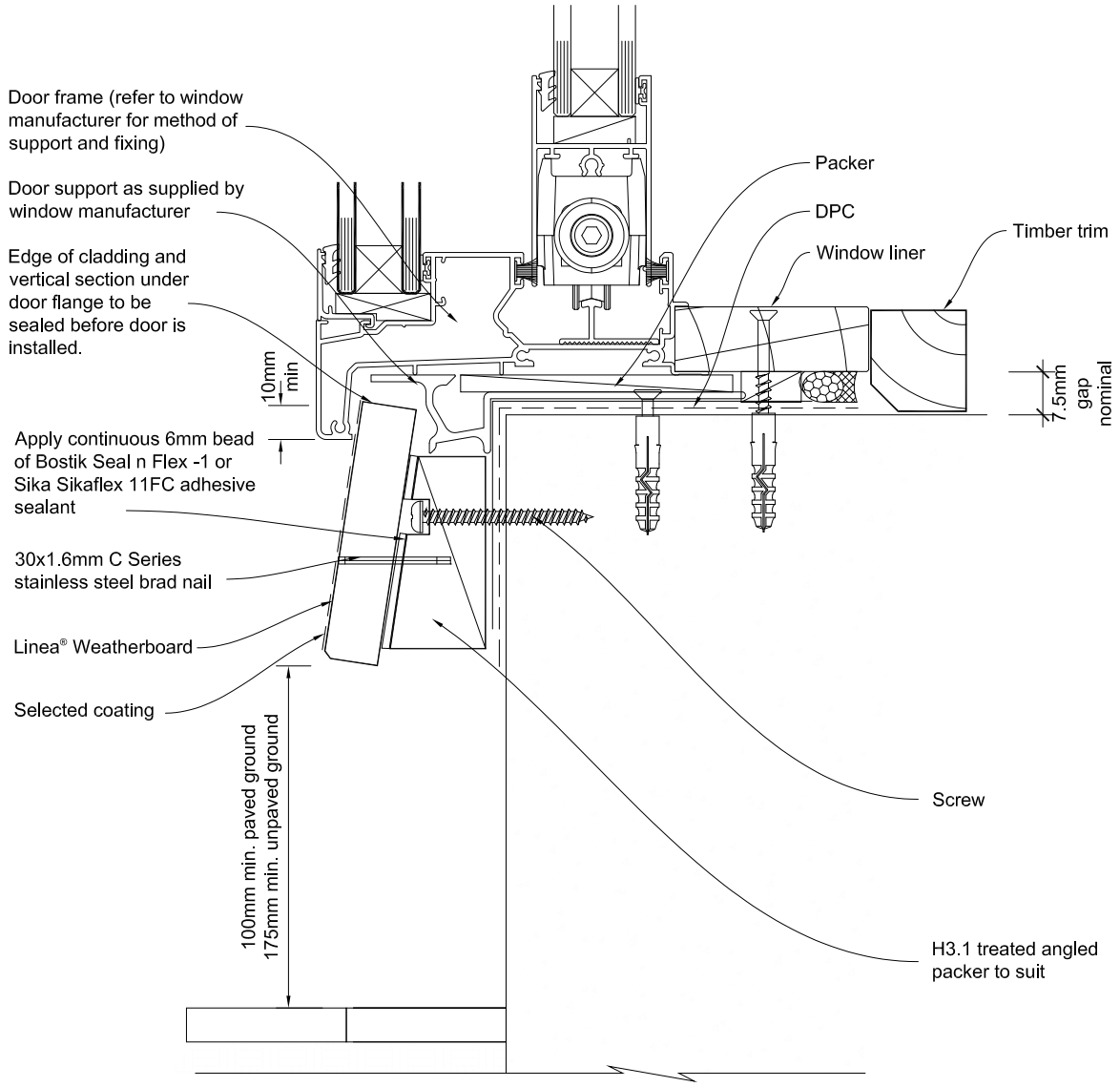

Refer to the manufacturer or supplier for technical information for these materials.

General notes for materials selection

1. Flashing materials must be selected based on environmental exposure, refer to NZS 3604 and Table 20 of the NZBC E2/AS1.
2. Building underlay must comply with acceptable solution E2/AS1.
3. Flashing tape must have proven compatibility with the selected flexible underlay and other materials with which it comes into contact.
4. Linea® Weatherboard to have sealed butt joint over batten at each corner of opening.

ABA20220988
APPROVED - Site Copy
Hastings District Council
20/09/2022

Figure 64: Junction between Linea™ Weatherboard and fascia board

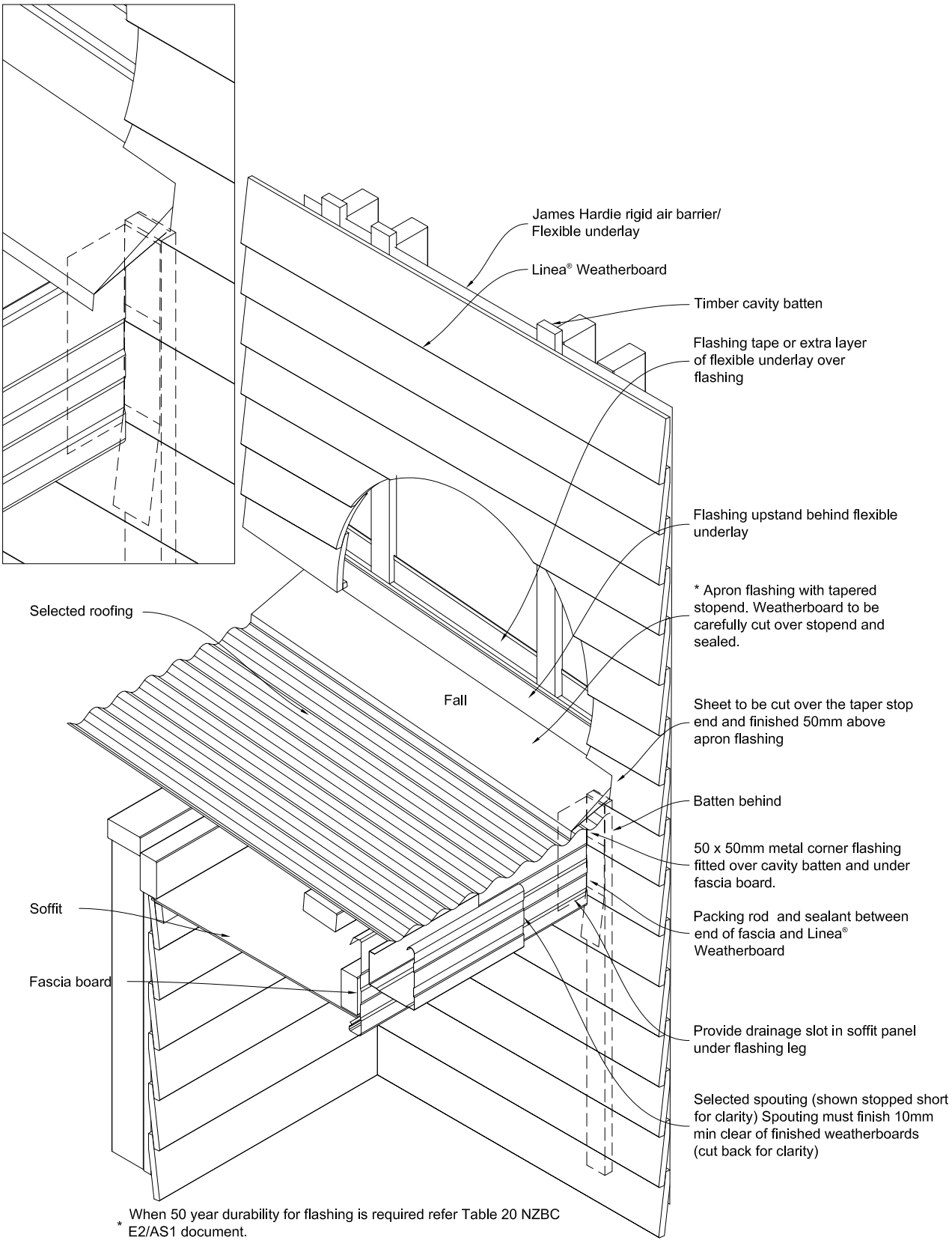

* When 50 year durability for flashing is required refer Table 20 NZBC E2/AS1 document.

ABA20220988
APPROVED - Site Copy
Hastings District Council
20/09/2022

Figure 65: Exclosed roof to wall intersection

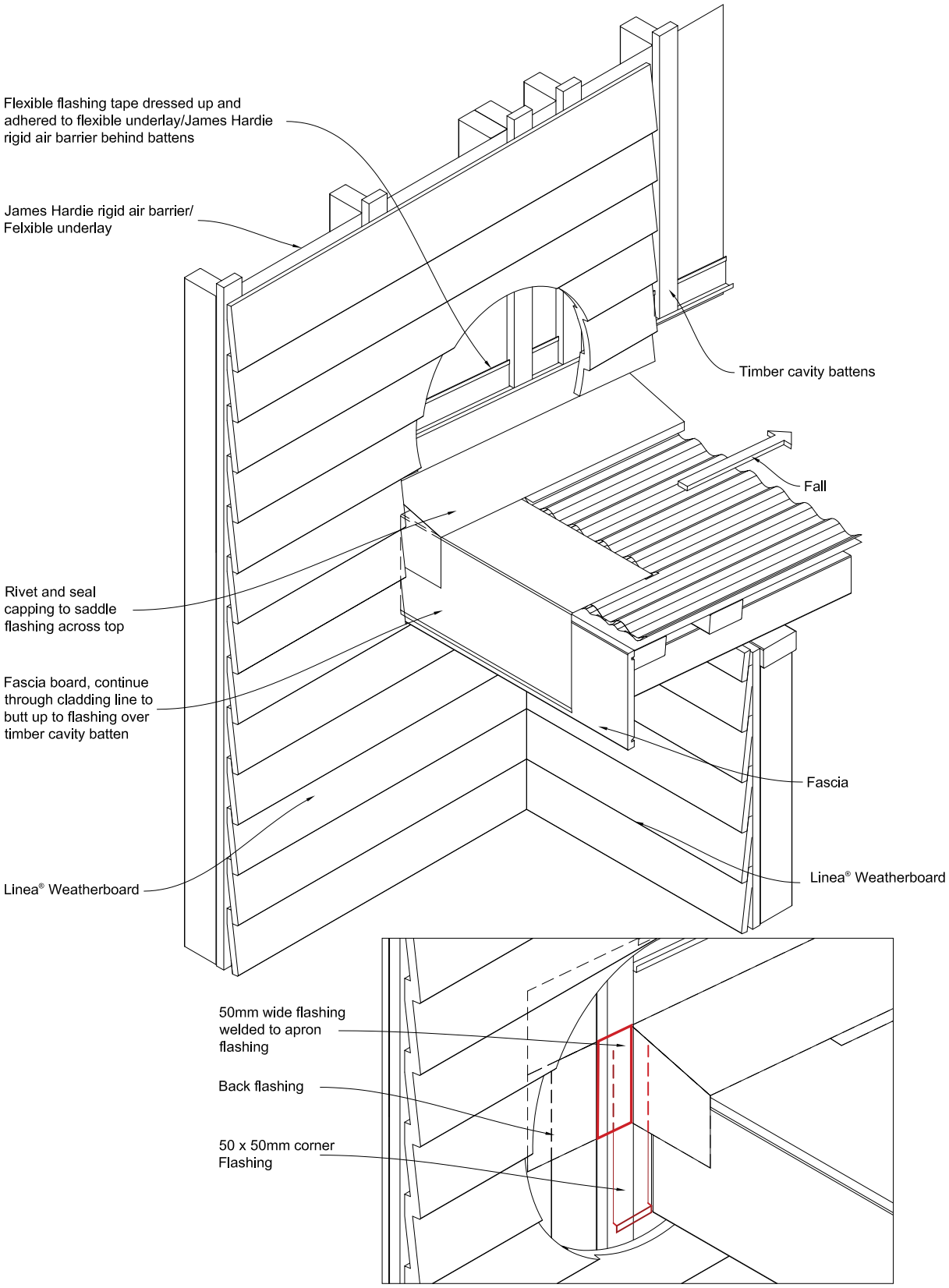

ABA20220988
APPROVED - Site Copy
Hastings District Council
20/09/2022

Product Warranty

Linea™ WEATHERBOARD

James Hardie New Zealand Limited ("James Hardie") warrants for a period of 25 years from the date of purchase that the Linea™ Weatherboard (the "Product"), will be free from defects due to defective factory workmanship or materials and, subject to compliance with the conditions below, will be resistant to cracking, rotting, fire and damage from termite attacks to the extent set out in James Hardie's relevant published literature current at the time of installation. James Hardie warrants for a period of 15 years from the date of purchase that the Axent™ Trim and accessories supplied by James Hardie will be free from defects due to defective factory workmanship or materials.

Nothing in this document shall exclude or modify any legal rights a customer may have under the Consumer Guarantees Act or otherwise which cannot be excluded or modified at law.

CONDITIONS OF WARRANTY:

The warranty is strictly subject to the following conditions:

a) James Hardie will not be liable for breach of warranty unless the claimant provides proof of purchase and makes a written claim either within 30 days after the defect would have become reasonably apparent or, if the defect was reasonably apparent prior to installation, then the claim must be made prior to installation.

b) This warranty is not transferable.

c) The Product must be installed and maintained strictly in accordance with the relevant James Hardie literature current at the time of installation and must be installed in conjunction with the components or products specified in the literature. Further, all other products, including coating and jointing systems, applied to or used in conjunction with the Product must be applied or installed and maintained strictly in accordance with the relevant manufacturer's instructions and good trade practice.

d) The project must be designed and constructed in strict compliance with all relevant provisions of the current New Zealand Building Code ("The NZBC"), regulations and standards.

e) The claimant's sole remedy for breach of warranty is (at James Hardie's option) that James Hardie will either supply replacement product, rectify the affected product or pay for the cost of the replacement or rectification of the affected product.

f) James Hardie will not be liable for any losses or damages (whether direct or indirect) including property damage or personal injury, consequential loss, economic loss or loss of profits, arising in contract or negligence or howsoever arising. Without limiting the foregoing James Hardie will not be liable for any claims, damages or defects arising from or in any way attributable to poor workmanship, poor design or detailing, settlement or structural movement and/or movement of materials to which the Product is attached, incorrect design of the structure, acts of God including but not limited to earthquakes, cyclones, floods or other severe weather conditions or unusual climatic conditions, efflorescence or performance of paint/coatings applied to the Product, normal wear and tear, growth of mould, mildew, fungi, bacteria, or any organism on any Product surface or Product (whether on the exposed or unexposed surfaces).

g) All warranties, conditions, liabilities and obligations other than those specified in this warranty are excluded to the fullest extent allowed by law.

h) If meeting a claim under this warranty involves re-coating of Products, there may be slight colour differences between the original and replacement Products due to the effects of weathering and variations in materials over time.

Disclaimer: The recommendations in James Hardie's literature are based on good building practice, but are not an exhaustive statement of all relevant information and are subject to conditions (c), (d), (f) and (g) above. James Hardie has tested the performance of Linea™ Weatherboard when installed in accordance with the Linea™ Weatherboard technical specification, in accordance with the standards and verification methods required by the NZBC and those test results demonstrate the product complies with the performance criteria established by the NZBC. However, as the successful performance of the relevant system depends on numerous factors outside the control of James Hardie (e.g. quality of workmanship and design) James Hardie shall not be liable for the recommendations made in its literature and the performance of the relevant system, including its suitability for any purpose or ability to satisfy the relevant provisions of the NZBC, regulations and standards, as it is the responsibility of the building designer to ensure that the details and recommendations provided in the relevant James Hardie installation manual are suitable for the intended project and that specific design is conducted where appropriate.

Copyright April 2019. © James Hardie New Zealand Limited. TM and ® denotes a Trademark or Registered Mark owned by James Hardie Technology Limited.

James Hardie

ABA20220988
APPROVED - Site Copy
Hastings District Council
20/09/2022



Ask James Hardie™ | Call 0800 808 868 | jameshardie.co.nz

Copyright April 2019. © James Hardie New Zealand Limited. TM and ® denotes a Trademark or Registered Mark owned by James Hardie Technology Limited.

LUMBERLOK®

ABA20220988
APPROVED - Site Copy
Hastings District Council
20/09/2022

LINTEL FIXING SCHEDULE

ALTERNATIVE TO TABLE 8.14 & FIGURE 8.12 NZS 3604:2011

NOTE:

- All fixings are designed for vertical loads only. Dead loads include the roof weight and standard ceiling weight of 0.20 kPa.
- Refer to Table 8.19 NZS 3604:2011 for nailing schedule to resist horizontal loads.
- These fixings assume the correct choice of rafter/truss to top plate connections have been made.
- All fixings assume bottom plate thickness of 45mm maximum. Note: TYLOK options on timber species.
- Wall framing arrangements under girder trusses are not covered in this schedule.
- All timber selections are as per NZS 3604:2011.

DEFINITIONS

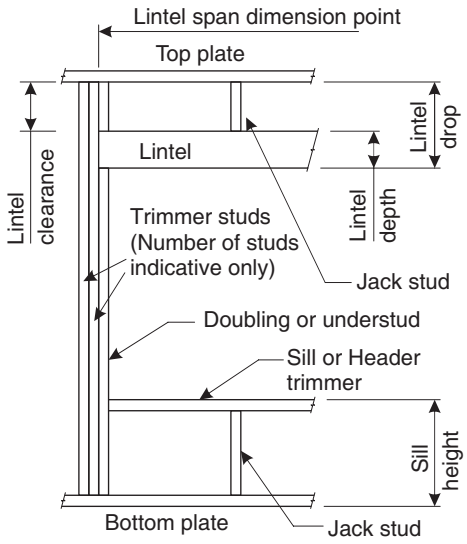

Lintel Supporting Girder Trusses:

Roof Tributary Area	Light Roof			Heavy Roof		
	Wind Zone			Wind Zone		
	L, M, H	VH	EH	L, M, H	VH	EH
8.6 m²	G	G	H	G	G	H
11.6 m²	G	H	H	G	G	H
12.1 m²	G	H	H	G	H	H
15.3 m²	H	H	-	G	H	H
19.1 m²	H	-	-	G	H	-
20.9 m²	H	-	-	H	H	-
21.8 m²	H	-	-	H	-	-
34.3 m²	-	-	-	H	-	-

Notes:
1) Roof Tributary Area = approx. 1/2 x (Total roof area on girder and rafter trusses supported by lintel)
2) Assumed girder truss is at mid-span or middle third span of lintel
3) Use similar fixings for both ends of lintel
4) All other cases require specific engineering design

SELECTION CHART FOR LINTEL FIXING

Lintel Span	Loaded Dimension (See Fig. 1.3 NZS 3604:2011)	Light Roof Wind Zone					Heavy Roof Wind Zone				
		L	M	H	VH	EH	L	M	H	VH	EH
0.7	2.0	E	E	E	E	F	E	E	E	E	E
	3.0	E	E	E	F	F	E	E	E	E	F
	4.0	E	E	F	F	F	E	E	E	F	F
	5.0	E	F	F	F	G	E	E	F	F	F
	6.0	E	F	F	G	G	E	E	F	F	G
0.9	2.0	E	E	E	F	F	E	E	E	E	F
	3.0	E	E	F	F	F	E	E	E	F	F
	4.0	E	E	F	F	F	E	E	F	F	F
	5.0	E	F	F	F	G	E	E	F	F	F
	6.0	E	F	F	G	G	E	E	F	F	G
1.0	2.0	E	E	E	F	F	E	E	E	E	F
	3.0	E	E	F	F	F	E	E	E	F	F
	4.0	E	F	F	F	G	E	E	F	F	F
	5.0	E	F	F	G	G	E	E	F	F	G
	6.0	E	F	F	G	G	E	E	F	F	G
1.2	2.0	E	E	F	F	F	E	E	E	F	F
	3.0	E	E	F	F	F	E	E	F	F	F
	4.0	E	F	F	G	G	E	E	F	F	G
	5.0	E	F	F	G	G	E	E	F	F	G
	6.0	F	F	G	G	H	E	E	F	G	G
1.5	2.0	E	E	F	F	F	E	E	E	F	F
	3.0	E	F	F	F	G	E	E	F	F	F
	4.0	E	F	F	G	G	E	E	F	F	G
	5.0	F	F	G	G	H	E	E	F	G	G
	6.0	F	F	G	H	H	E	E	F	G	H
2.0	2.0	E	F	F	F	G	E	E	F	F	F
	3.0	E	F	F	G	G	E	E	F	F	G
	4.0	F	F	G	G	H	E	E	F	G	G
	5.0	F	F	G	H	H	E	E	F	G	H
	6.0	F	G	G	H	H	E	F	G	H	H
2.4	2.0	E	F	F	G	G	E	E	F	F	G
	3.0	F	F	G	G	H	E	E	F	G	G
	4.0	F	F	G	H	H	E	E	F	G	H
	5.0	F	G	G	H	H	E	F	G	H	H
	6.0	F	G	H	H	-	E	F	G	H	H
3.0	2.0	E	F	F	G	G	E	E	F	F	G
	3.0	F	F	G	H	H	E	E	F	G	H
	4.0	F	G	G	H	H	E	F	G	H	H
	5.0	F	G	H	H	-	E	F	G	H	H
	6.0	F	G	H	-	-	E	F	G	H	-
3.6	2.0	F	F	G	G	H	E	E	F	G	G
	3.0	F	F	G	H	H	E	F	G	G	H
	4.0	F	G	H	H	-	E	F	G	H	H
	5.0	F	G	H	-	-	E	F	G	H	-
	6.0	G	H	H	-	-	E	F	H	-	-
4.2	2.0	F	F	G	G	H	E	E	F	G	G
	3.0	F	G	H	H	-	E	F	G	H	H
	4.0	F	G	H	-	-	E	F	G	H	-
	5.0	G	H	H	-	-	E	F	H	-	-
	6.0	G	H	-	-	-	E	F	H	-	-
4.5	2.0	F	F	G	H	H	E	E	F	G	H
	3.0	F	G	H	H	-	E	F	G	H	H
	3.4	F	G	H	H	-	E	F	G	H	-
	4.0	F	G	H	-	-	E	F	G	H	-
	5.0	G	H	-	-	-	E	F	H	-	-
	6.0	G	H	-	-	-	E	F	H	-	-
4.8	2.0	F	F	G	H	H	E	E	F	G	H
	3.0	F	G	H	H	-	E	F	G	H	H
	3.2	F	G	H	H	-	F	F	G	H	-
	4.0	F	G	H	-	-	E	F	H	H	-
	5.0	G	H	-	-	-	E	F	H	-	-
	6.0	G	H	-	-	-	E	F	H	-	-

MiTek®

© Copyright 2011 MiTek Holdings, Inc.
All rights reserved.

LINTEL FIXING OPTIONS

ABA20220988
APPROVED - Site Copy
Hastings District Council
20/09/2022

LUMBERLOK®

TYPE E
1.4 kN

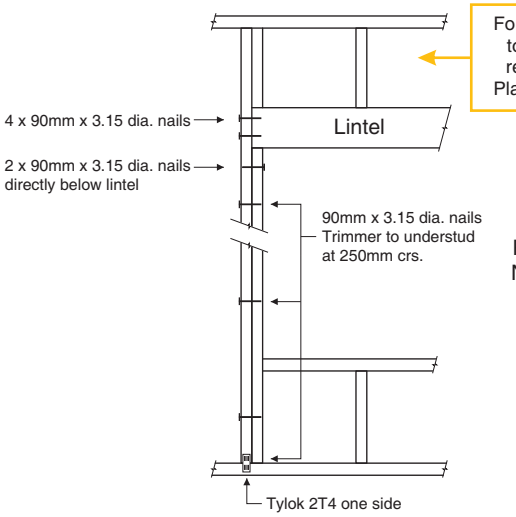

TYPE F
4.0 kN

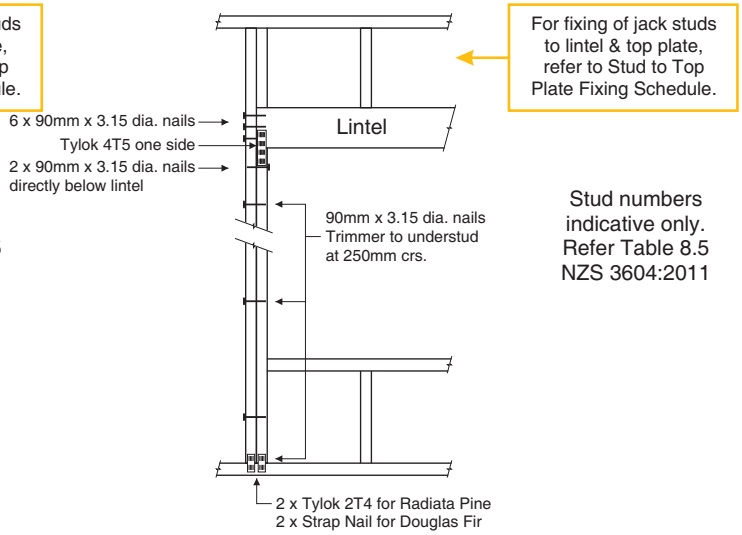

TYPE G
7.5 kN

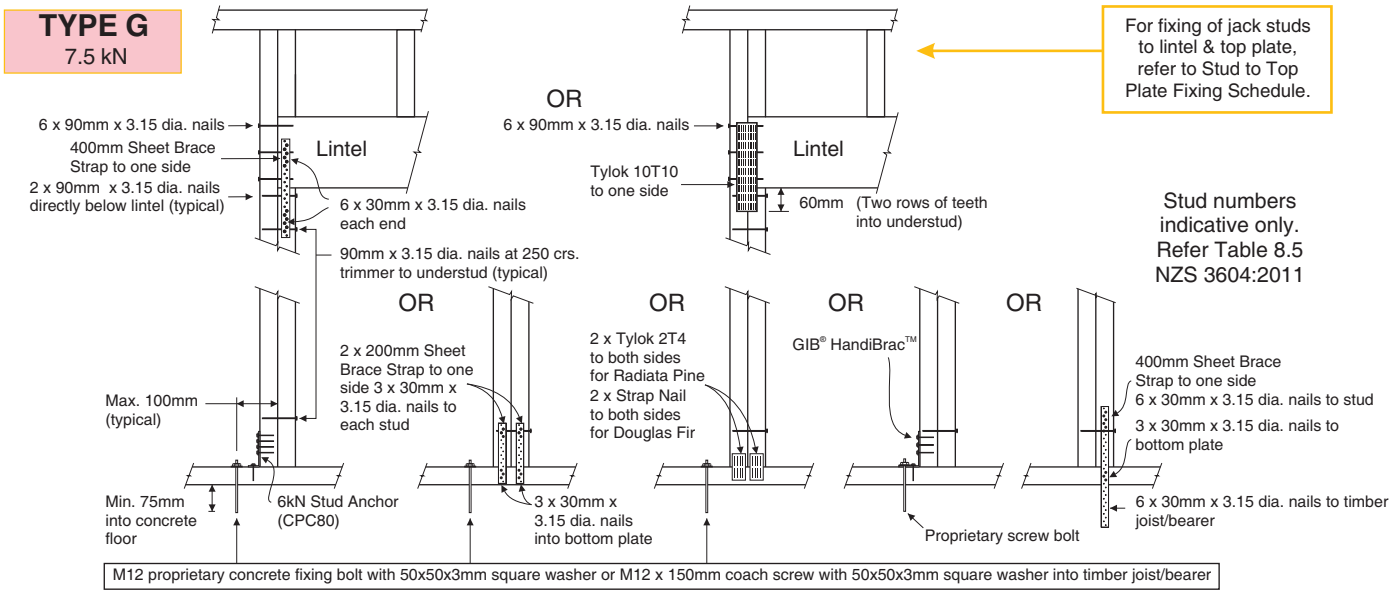

TYPE H
13.5 kN

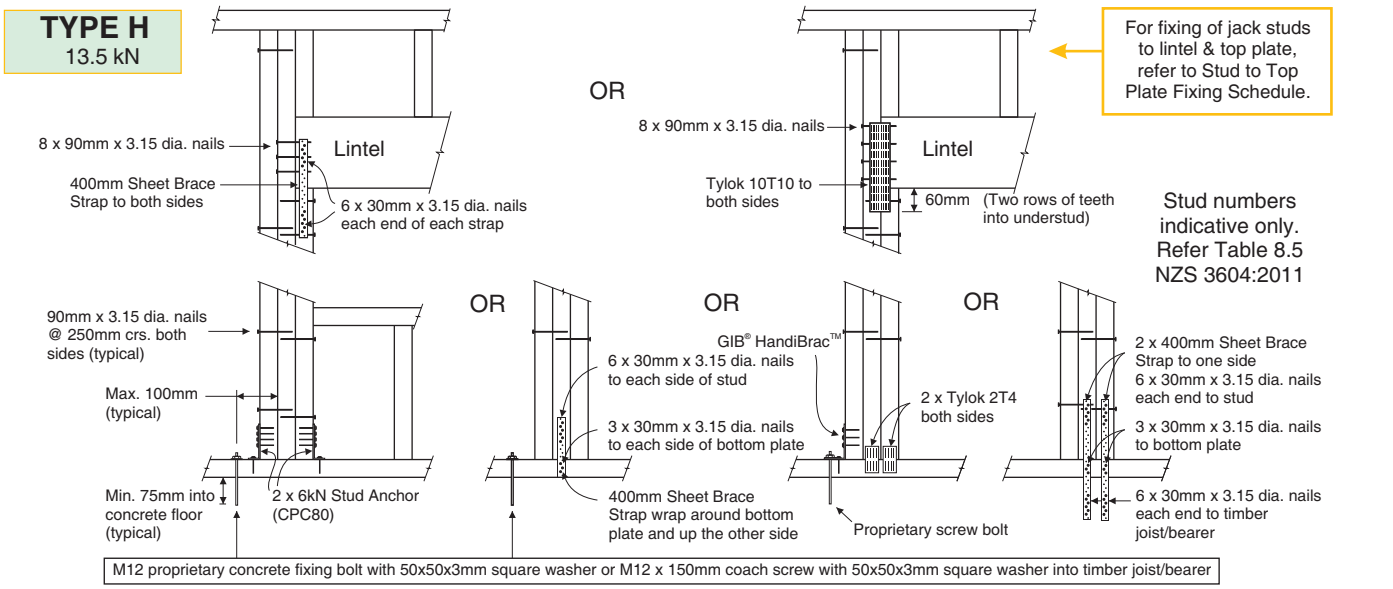

MiTek New Zealand Limited

AUCKLAND
PO Box 58-014, Botany 2163
Phone: 09-274 7109
Fax: 09-274 7100

CHRISTCHURCH
PO Box 8387, Riccarton 8440
Phone: 03-348 8691
Fax: 03-348 0314

www.miteknz.co.nz

MiTek®
GANG-NAIL® LUMBERLOK® BOWMAC®

© Copyright 2011 MiTek Holdings, Inc.
All rights reserved.

ABA20220988
APPROVED - Site Copy
Hastings District Council
20/09/2022

Metrotile
ROOFING SYSTEMS

INSTALLATION MANUAL



BOND / CLASSIC / ROMAN / SHAKE ANTICA / TUDOR / ROYAL

These installation details are provided to demonstrate the recommended installation methods for Metrotile products and accessories.

The details and information in this document reflect current roofing practices used in New Zealand. Consult with Metrotile (NZ) Ltd for additional information.

Metrotile (NZ) Ltd
1A Inlet Road,
Takanini, Auckland, New Zealand
P: +64 9 299 9498
F: +64 9 298 4114
E: info@metrotile.com
W: www.metrotile.com

ABA20220988
APPROVED - Site Copy
Hastings District Council
20/09/2022

Table Of Contents

1. General Information 3

2. Recommended Tools 9

3. Profile Specifications 11

4. Flashing Specifications 13

5. Detail Reference Guide 15

6. Preparatory Installation 16

7. Tile Laying Installation - General 19

8. Tile Laying Installation - Shake Specific 24

9. Valley Installation - General 27

10. Gable Installation 30

11. Ridge Installation 34

12. Sidewall Installation 37

13. Headwall Installation 39

14. Penetration Installation 41

15. Caring for your Roof 42

ABA20220988
APPROVED - Site Copy
Hastings District Council
20/09/2022

1. General Information

1.0 Description

1.1 Metrotile products are manufactured in accordance with Part 2 of NZS 4217: 1980 New Zealand Standard for "Pressed Metal Tiles" and provided our roof products are installed in accordance with our specifications they will meet the requirements of the New Zealand Building Code.

1.2 Manufactured to ISO9001, NZS3604 and NZS 4217.

1.3 Metrotile currently have ten roofing profiles available: Bond, Classic, Shake, Roman, Royal, Tudor, Antica (covered by this manual), CF Shake, CF Shingle and CF Slate (please refer to CF Installation Manual's for further information).

1.4 The roofing tiles are printed on the underside with the brand name.

1.5 The following flashings form an integral part of the roofing system:

- 2m flashings (effective cover 1.9 m)
- Standard Barge Flashing
- Standard Ridge (for Hip and Ridge capping)
- Standard Side Flashing
- A.E. Barge and A.E. Apron Flashings are also supplied with alloy edging.

400mm flashings (effective cover 370mm):

- Barrel Trim
- V-Ridge

1.6 50 x 3.05mm ring shank nails are used for fixing the roofing tiles. Where tiles have to be fixed on top of a rib, e.g. at the fascia, eaves, barges or on top of flashings, 50 x 3.05mm ring shank nails fitted with neoprene washers are used or can be alternatively sealed with a MS type sealant.

2.0 Materials

2.1 Zincalume consists of steel hot-dip coated with an aluminium/zinc alloy complying with NZS 344J. The steel is G300 (Structural Drawing) grade 0.4mm thick. To the topside of the Zincalume coated steel formed profile, one of the following coating systems is applied:

- Textured Coating - an acrylic base-coat which binds a layer of stone granules covered with an acrylic overglaze, or
- Satin Coating - an acrylic topcoat

3.0 Colours

3.1 **Bond** is supplied in the following colours:

- Textured - Autumn, Brown Bark, Cedar, Charcoal, Coffee Brown, Greenstone, Olive, Silver Grey, Slate, Terracotta
- Satin - Beige, Ebony, Grey Friars, Ironsand, Karaka, Mist Green, New Denim Blue, Permanent Green, River Gum, Scoria, Terracotta, Wizard

3.2 **Classic** is supplied in the following colours:

- Textured - Autumn, Brown Bark, Cedar, Charcoal, Coffee Brown, Greenstone, Olive, Silver Grey, Slate, Terracotta
- Satin - Ebony, Grey Friars, Ironsand, Karaka, New Denim Blue, River Gum, Scoria, Terracotta, Wizard

3.3 **Roman** is supplied in the following colours:

- Textured - Ember, Forest, Charcoal, Sorrento, Firenze, Tuscany, Walnut

3.4 **Shake** is supplied in the following colours:

- Textured - Ashwood, Beechwood, Brown Bark, Ember, Cedar, Charcoal, Coffee Brown, Forest, Greenstone, Mesquite, Walnut, Weathered Timber
- Satin - Ebony, Grey Friars, Ironsand, Karaka, New Denim Blue, River Gum.

ABA20220988
APPROVED - Site Copy
Hastings District Council
20/09/2022

4.0 Packing

4.1 The tiles are packed on wooden pallets protected with temporary waterproof covering for delivery to the site.
4.2 Flashings, V - Ridge, Barrel Trim and other accessories are packed separately.

5.0 Handling and Storage

5.1 The product must be transported and handled with care to avoid damaging the surfaces.
5.2 Long-term storage of roofing must be under dry, ventilated cover.
5.3 For short-term storage on site, pallets should be placed separately on level ground.
5.4 The products must be left covered with the waterproof covering on, when stored short-term on site in order to avoid water stains.

6.0 General Design Information

6.1 Metrotile Roofing Systems are pressed-metal roof cladding products suitable for use on new or existing roofs when fixed to timber battens.
6.2 New roofs must be designed and constructed in accordance with NZS 3604 or to a specific structural design.
6.3 Roof design must take into account any requirements for areas subject to regular snowfalls (as per the requirements of Acceptable Solution E2/AS1 Paragraph 1.2), the need to minimise roof cavity condensation, e.g., in skillion roofs, and specific flashing details.
6.4 Existing roofs must be inspected for soundness and the capability of resisting likely structural loads.
6.5 Minimum roof pitch for Bond, Classic and Roman profiles is 12.5 degrees and 15 degrees for the Shake profile.
6.6 Note must also be taken of the requirements of Acceptable Solution E2/AS1 Paragraph 1.4(ii) for antiponding boards when the roof pitch is less than 15 degrees.
6.7 The flashings supplied by Metrotile (N.Z.) Ltd are acceptable alternatives to those specified in Figure 1 of Acceptable Solution E2/AS1.
6.8 The designer must also provide weathersealing details for situations not covered by the manufacturer's information. The designer is responsible for ensuring that all of his/her details are incorporated into the roof design, and that those details are followed by the installer.
6.9 Batten size and fixing must be in accordance with the requirements of NZS 3604 for the relevant rafter spacing (maximum 1200mm).

ABA20220988
APPROVED - Site Copy
Hastings District Council
20/09/2022

6.10 Uplift resistance requirements

		V(m/s)	q_1(kPa)	V(m/s)	q_1(kPa)	V(m/s)	q_1(kPa)	V(m/s)	q_1(kPa)
Windzone		Low 32	0.61	Med 37	0.62	High 44	1.16	Very High 50	1.50
		Main	fixing kN k_1 Periphery	Main	fixing kN k_1 Periphery	Main	fixing kN k_1 Periphery	Main	fixing kN k_1 Periphery
purlin size (mm)	s p a n (mm)	1.0	1.5	1.0	1.5	1.0	1.5	1.0	1.5
50x40	900	**0.2**	**0.3**	**0.2**	**0.4**	**0.3**	**0.5**	**0.5**	**0.7**
50x50	1200	**0.2**	**0.4**	**0.3**	**0.5**	**0.5**	**0.7**	**0.6**	**0.9**
		C_{pz} = 0.9		(C_{pz} = C_{pi} + C_{pe})			C_{pi} = 0	C_{pe} = 0.9	

*Periphery is 20% of width of building, as shown in NZS 3604

6.11 Uplift resistance achieved by using fasteners below

Gun Nail	**90x3.15**	**1**	**0.4**
Ringshank Nail (gun/hand)	**90x3.2**	**1**	**0.6**
Gun Nail	**90x3.15**	**2**	**0.7**
Twist Shank Nail	**90x3.3**	**1**	**0.9**
Purlin Screw c/s head	**10gx100**	**1**	**2.5**
Type 17 screw	**14gx100**	**1**	**7.3**

*Data obtained using 45mm thick battens

7.0 General Installation Information

7.1 Metrotile Roofing Systems must be installed in accordance with the manufacturer's instructions as contained in this document.

7.2 Care must be taken when handling, cutting, bending, and installing the roofing in order to avoid damage to the surface. In particular, the roofing surface must be kept clean of dirt and other substances such as metal swarf.

7.3 Flat, rubber-soled shoes must be used when working on the roof, and protective padding used on tools. Loads must be applied only over battens and the installed roofing protected from other construction and finishing work being carried out on or above the roofing, such as cladding materials, plaster and paint.

8.0 Roof Framing

8.1 Roof framing should provide support and fixing for the tile battens that will satisfy the design load wind requirements.

8.2 Installers should check that the framing has been erected to an accurate and even line before roof fixing is started.

8.3 An inspection and any rectification to the framing alignment must be carried out before roof fixing is commenced.

ABA20220988
APPROVED - Site Copy
Hastings District Council
20/09/2022

9.0 Tiling Battens

9.1 Battens must be treated, sized, and fixed according to NZS 3604. On new roofing underlay, e.g. as given in Acceptable Solution E2AS1 Paragraph 1.3, must be fixed in place first in accordance with the instructions of the underlay manufacturer.

9.2 A row of battens is fixed directly behind the fascia board. The next row of battens is generally fixed 320mm from the front of the fascia board, and subsequent rows are fixed at 368mm centres and 370 centres (satin).
Battens shall span at least three rafters or trusses at the edge of all roof planes. The installer is to select tiling battens from pack and reject any unsuitable battens that may not support his/her weight when spanning 900mm centres. Tiling battens are required to support tiles.

9.3 In reroofing situations when counter-battens are used, they must be sized, installed and fixed in accordance with the requirements of NZS 4217. This must be done in low, medium and high NZS 3604 building wind zones.

9.4 In very high wind zones, counter battens must be spaced at 600mm maximum centres when the existing purlin spacing is 750mm, and 450mm maximum centres when the existing purlin spacing is 900mm.

9.5 Where the counter batten sits directly on the purlin behind the fascia, two 75mm x 3.15mm skew driven nails may be used, as per NZS 4217 section 202.4.4 Preparation of roof.

10.0 Flashings and Fixings

10.1 To comply With E2/AS1 8.2.4
In all applications the choice of flashing/fixing material shall take into account NZBC B2 Durability, specific conditions of use and consideration of the surrounding material.
Durability requirements for flashings:
a) 50 years, where flashings are completely hidden behind claddings, or not accessible.
b) 15 years, where flashings are exposed, or accessible.

11.0 Special Flashings

11.1 Special flashings are made as required by the manufacturer from uncoated steel and subsequently factory coated using the same coating process as used for tiles or alternatively manufactured on site by the roofer using factory finished tiles and accessories and cutting and bending to the desired shape.

12.0 Durability

12.1 Metrotile warrants that each Zincalume roofing tile comprised in the roof fitted to the purchaser's property, will carry an appropriate weatherproof warranty. This warranty does not cover damage due to improper handling or installation.
Please refer to Country Warranty for further information.

12.2 Installation must be in accordance with instructions of Metrotile (N.Z.) Ltd.

12.3 Where the roof space is not completely closed-off to the elements, the underside of the roof must be completely shielded with roofing underlay or sheathing such as fibre cement, hardboard or plywood.

ABA20220988
APPROVED - Site Copy
Hastings District Council
20/09/2022

Limitations on use

12.5 Metrotile Roofing Systems must not be used in high alkaline environments, (such as on intensive animal shelters or other buildings with high ammonia or urea concentrations), and/or contact with fresh concrete or plaster must be avoided.

12.6 The roofing must not be used in contact with permanently damp materials, on industrial buildings in which corrosive processes occur, or over swimming pools.

12.7 Copper in any form must not be allowed to contact the roofing, and care must be taken to ensure that runoff from copper overflow or down pipes does not come into contact with the tiles.

12.8 Lead or lead edged flashings must not be used with Metrotile Roofing Systems unless a suitable barrier paint system is applied to both surfaces to ensure there is no metal to metal contact, or contact through water runoff. The manufacturer supplies flashings that are suitable for use with the roofing products.

Weathering

12.9 With granule-coated products, some loss of granules and overglaze can be expected over time.

12.10 Acrylic-coated tiles may fade and chalk as time passes. This may be more noticeable with some colours than others, and is an expected part of the weathering process.

Maintenance

12.11 Metrotile pressed metal roofing tiles require minor maintenance to ensure the continued performance of the roof over its life.

12.12 Where possible a visual ground inspection of your roof should be performed every year, or after any significant storm, for the following items. Maintenance or repairs to these items should help prevent any major problems occurring:

- Damaged or displaced tiles or flashings.
- Blocked valleys, spouting or downpipes with debris such as leaves, other plant matter or foreign objects such as toys.
- Wash down any roof areas not effected by rain washing (see Cleaning below).

12.13 In certain environmental conditions moss, mould or lichen may present itself on areas of the roof. To maintain the integrity of the coating and for aesthetic reasons this can easily be removed with a generic roof wash treatment, such as Mossboss, applied by low pressure spraying. When the roof is used for collection of potable water, ensure that the downpipes are disconnected for the period stated in the spraying instructions. Failure to maintain the roof in this manner will void the coating warranty.

12.14 When repairs or maintenance are needed we recommend that you consult a metal tile roofing specialist, as additional damage to the roof tiles can be caused by inexperienced foot traffic (If you must access the roof follow these instructions, to avoid denting or damaging the roof tiles, you should wear soft sole shoes & place your foot on the lowest point of the tile and at the front edge of the tile). Also, house holders unfamiliar with working at height pose considerable risk of injury to themselves by falling from ladders or the roof.

ABA20220988
APPROVED - Site Copy
Hastings District Council
20/09/2022

Cleaning

12.15 Metrotile roofs must be washed down regularly with fresh water in all areas not washed by rain, such as those areas sheltered by the eaves overhang of a higher roof. In areas near the sea, where salt deposition is noticeable on windows and similar surfaces, or near areas of industrial pollution, washing down should be carried out every 2-3 months. In other areas, washing down every 6 months should suffice.

12.16 Lichen and mould growth must be removed with chemical cleaners recommended by Metrotile (N.Z) Limited, such as Mossboss. Metrotile (N.Z) Limited recommends to chemically clean the roof once every 2-4 years to maintain a good appearance and prevent the growth of algae, moss and lichen. Failure to carry out this maintenance program will void the coating warranty (see Metrotile coating Warranty).

13.0 Dissimilar Metals

13.1 To avoid adverse corrosion effects caused by dissimilar metals, COPPER and LEAD flashings should not be used with Metrotile roofing products and accessories. Under no circumstance should these materials be in contact or allow water runoff from these materials to flow on to the roof. Failure to comply with this will void the weatherproof warranty.

14.0 Touch-Up Kit

14.1 Minor scuffing of the tiles can be repaired with the Touch-Up kit from Metrotile. Use the Acrylic Touch-Up kit from Metrotile (not sealants). Coloured aerosol paints should never be sprayed on tiles or accessories made by Metrotile.

ABA20220988
APPROVED - Site Copy
Hastings District Council
20/09/2022

2. Recommended Tools

Metrotile Roofing Systems are installed with standard construction tools. The tiles may be cut with tin-snips, or the Guillotine (cutter) supplied as part of the Metrotile installation kit that consists of; 1 Guillotine (cutter), 1 Bender, 1 Top Course Bender.

Guillotine (also known as a Cutter)

356mm x 1016mm x 76mm 17.7kg. This Guillotine is used for Bond, Classic, Roman, Shake & Shingle.

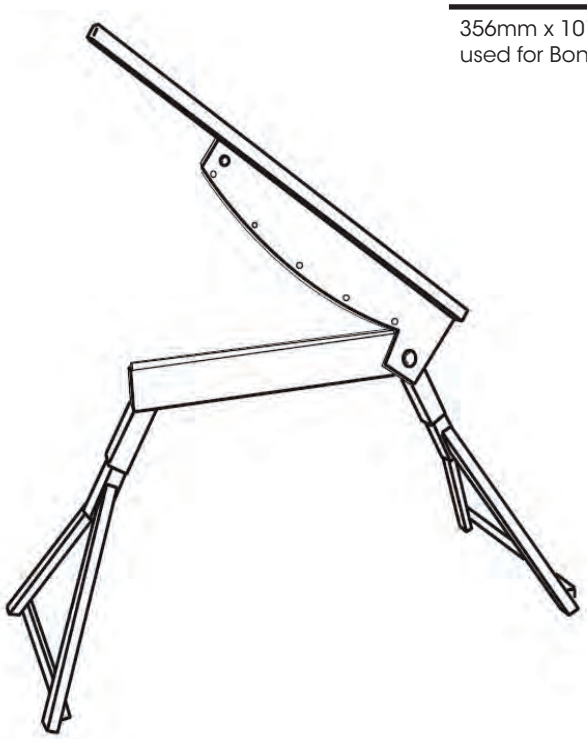

Top Course Bender

1549mm X 457mm X 101mm 28.1kg

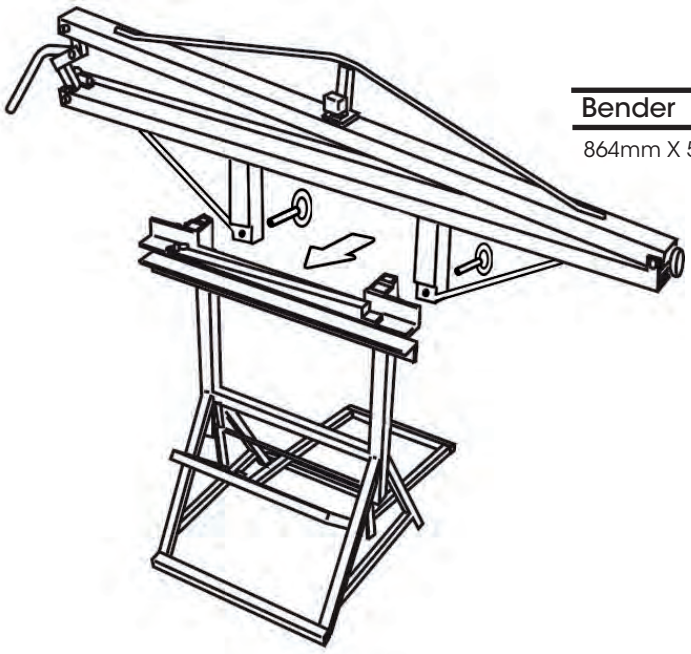

Bender

864mm X 508mm X 406mm 20.9kg

ABA20220988
APPROVED - Site Copy
Hastings District Council
20/09/2022

Recommended Tools Continued

Impact or Screw Gun	Hand Bender
	
Hand Scribe	**Measuring Tape**
	
Nail Gun	**Tin Snips**
	
Set-out Rod	**Bevel**
	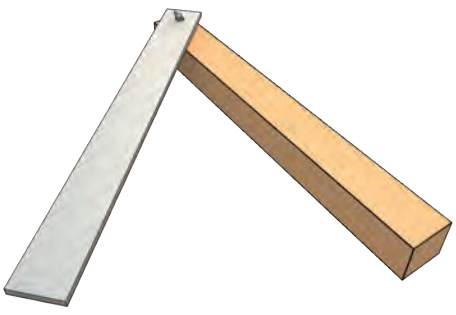

ABA20220988
APPROVED - Site Copy
Hastings District Council
20/09/2022

Metrotile ROOFING SYSTEMS

Profile Specifications

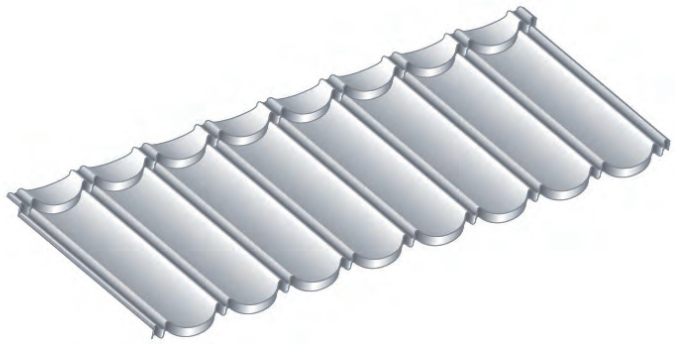

Bond

Overall Length:	1325mm	
Length of Cover:	1265mm	
Width of Cover:	368mm	
Roof Cover / Tile:	0.46m²	
Tiles / m2:	2.15	
Minimum Roof Pitch:	12.5°	
Nailing Points Per Tile:	4	
	Textured	**Satin**
Weight / Tile:	2.9kg	2.0kg
Weight / m2:	6.3kg	4.4kg

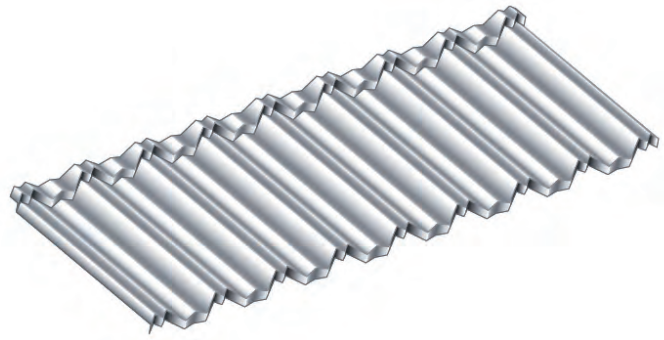

Classic

Overall Length:	1325mm	
Length of Cover:	1265mm	
Width of Cover:	368mm	
Roof Cover / Tile:	0.46m²	
Tiles / m2:	2.15	
Minimum Roof Pitch:	12.5°	
Nailing Points Per Tile:	4	
	Textured	**Satin**
Weight / Tile:	2.9kg	2.0kg
Weight / m2:	6.3kg	4.4kg

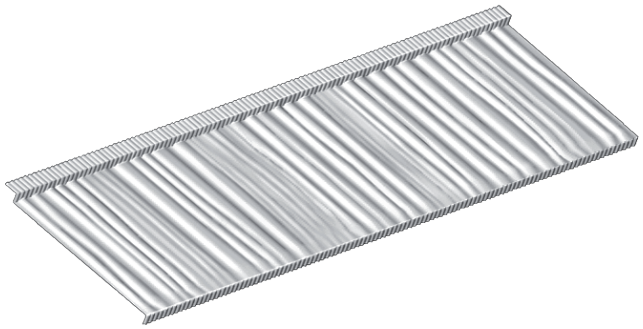

Shake

Overall Length:	1325mm	
Length of Cover:	1265mm	
Width of Cover:	368mm	
Roof Cover / Tile:	0.46m²	
Tiles / m2:	2.15	
Minimum Roof Pitch:	15°	
Nailing Points Per Tile:	4	
	Textured	**Satin**
Weight / Tile:	3.0kg	2.1kg
Weight / m2:	6.4kg	4.5kg



Roman

	Textured
Overall Length:	1290mm
Length of Cover:	1220mm
Width of Cover:	368mm
Roof Cover / Tile:	0.45m²
Tiles / m2:	2.22
Weight / Tile:	2.9kg
Weight / m2:	6.3kg
Minimum Roof Pitch:	12.5°
Nailing Points Per Tile:	4

ABA20220988
APPROVED - Site Copy
Hastings District Council
20/09/2022

Metrotile ROOFING SYSTEMS

Profile Specifications

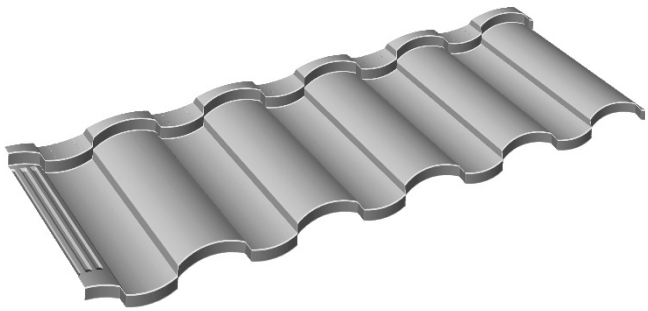

Antica

Overall Length:	1295mm	
Length of Cover:	1260mm	
Width of Cover:	368mm	
Roof Cover / Tile:	0.46m²	
Tiles / m2:	2.16	
Minimum Roof Pitch:	12.5°	
Nailing Points Per Tile:	4	
	Textured	**Satin**
Weight / Tile:	3.0kg	2.1kg
Weight / m2:	6.4kg	4.5kg

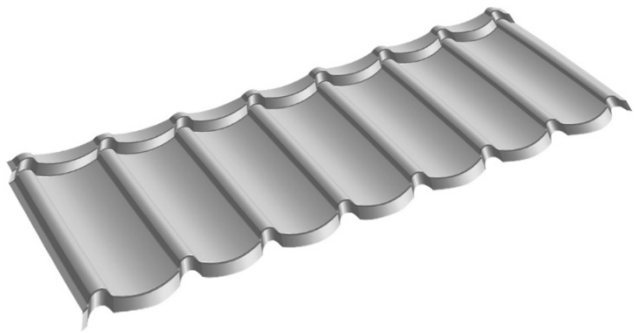

Tudor

Overall Length:	1325mm	
Length of Cover:	1265mm	
Width of Cover:	368mm	
Roof Cover / Tile:	0.46m²	
Tiles / m2:	2.15	
Minimum Roof Pitch:	12.5°	
Nailing Points Per Tile:	4	
	Textured	**Satin**
Weight / Tile:	3.0kg	2.1kg
Weight / m2:	6.4kg	4.5kg

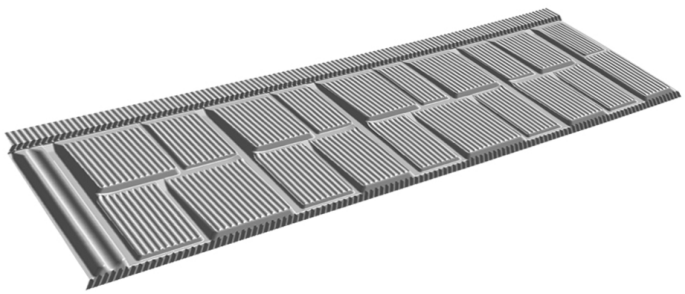

Royal

	Textured
Overall Length:	1330mm
Length of Cover:	1260mm
Width of Cover:	368mm
Roof Cover / Tile:	0.46m²
Tiles / m2:	2.15
Weight / Tile:	3.0kg
Weight / m2:	6.4kg
Minimum Roof Pitch:	15°
Nailing Points Per Tile:	4

ABA20220988
APPROVED - Site Copy
Hastings District Council
20/09/2022

4. Flashing Specifications Version 19.11

100 – Barrel Trim	
Overall Length	400mm
Cover Length	370mm
Weight (Textured)	0.462 Kg
Weight (Satin)	0.324 Kg

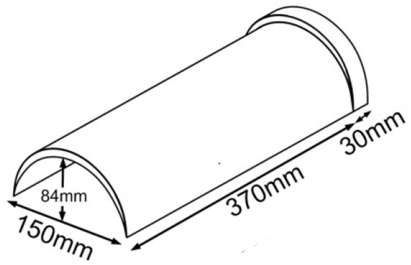

101 – V Ridge	
Overall Length	400mm
Cover Length	370mm
Weight (Textured)	0.472 Kg
Weight (Satin)	0.316 Kg

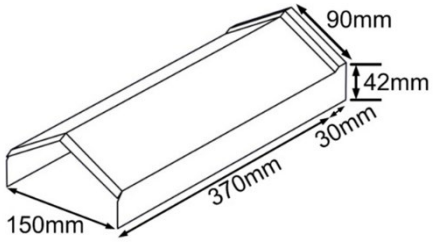

104 – Standard Side Flashing	
Overall Length	2000mm
Cover Length	1850mm
Weight (Textured)	1.50 Kg
Weight (Satin)	1.01 Kg

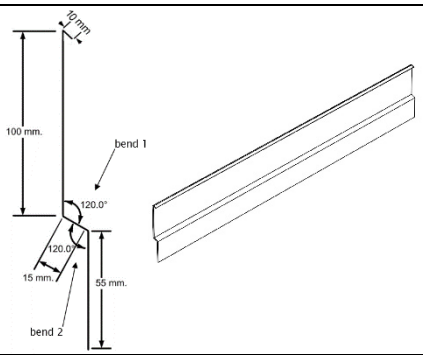

105 – End Cap Trim	
Overall Length	154mm
Weight (Textured)	0.082 Kg
Weight (Satin)	0.058 Kg

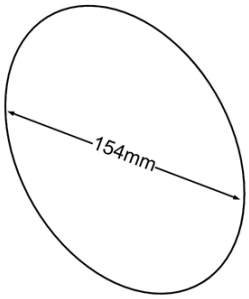

106 – End Cap V Ridge	
Overall Length	150mm
Weight (Textured)	0.074 Kg
Weight (Satin)	0.052 Kg

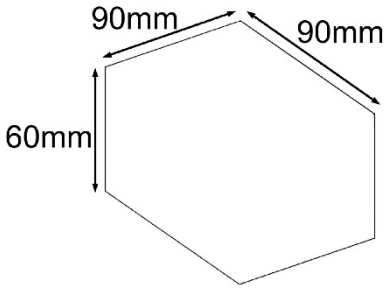

116 – Metal Tile Valley	
Overall Length	2000mm
Cover Length	1850mm
Weight (Satin)	3.50 Kg

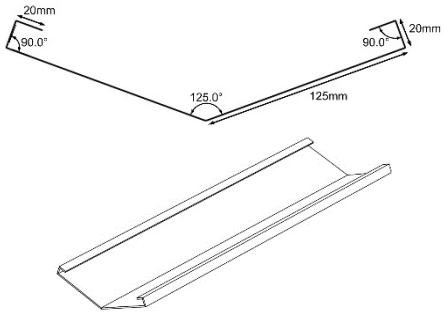

107 – Angle Ridge	
Overall Length	2000mm
Cover Length	1850mm
Weight (Textured)	1.63 Kg

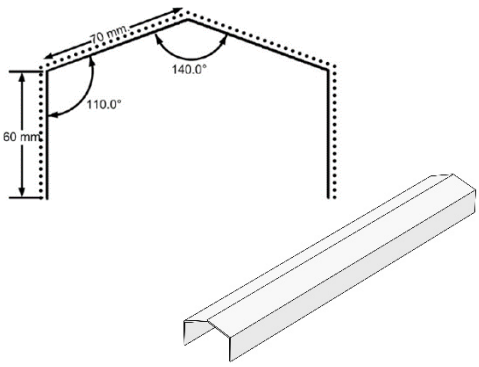

102 – Standard Ridge	
Overall Length	2000mm
Cover Length	1850mm
Weight (Textured)	1.72 Kg
Weight (Satin)	1.20 Kg

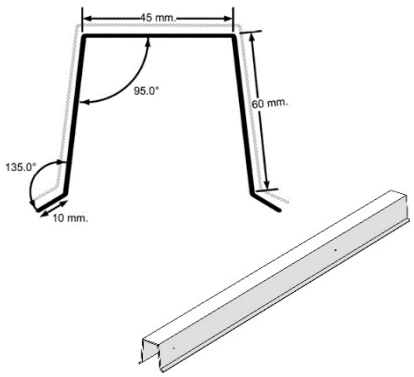

103 – Standard Barge	
Overall Length	2000mm
Cover Length	1850mm
Weight (Textured)	1.98 Kg
Weight (Satin)	1.45 Kg

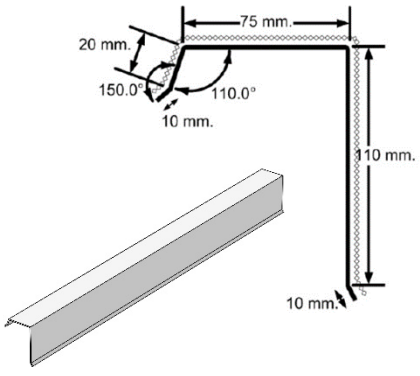

ABA2022/0988
APPROVED - Site Copy
Hastings District Council
20/09/2022

108 – Notched Barge LH	
Overall Length	2000mm
Cover Length	1850mm
Weight (Textured)	2.50 Kg
Weight (Satin)	1.75 Kg

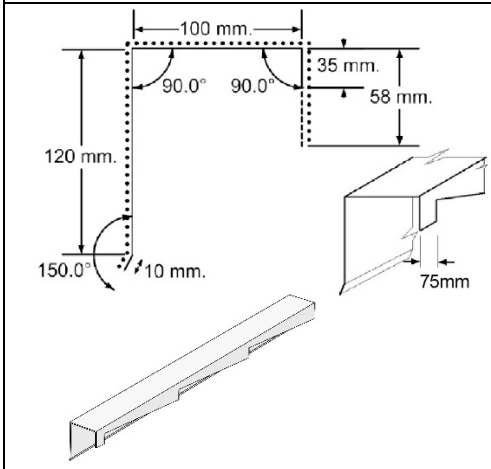

109 – Notched Barge RH	
Overall Length	2000mm
Cover Length	1850mm
Weight (Textured)	2.50 Kg
Weight (Satin)	1.75 Kg

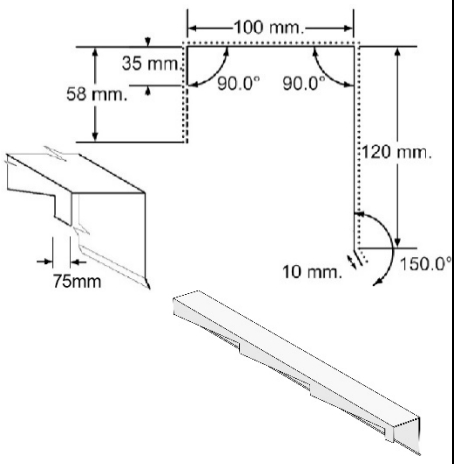

110 – Notched Sidewall LH	
Overall Length	2000mm
Cover Length	1850mm
Weight (Textured)	2.35 Kg
Weight (Satin)	1.64 Kg

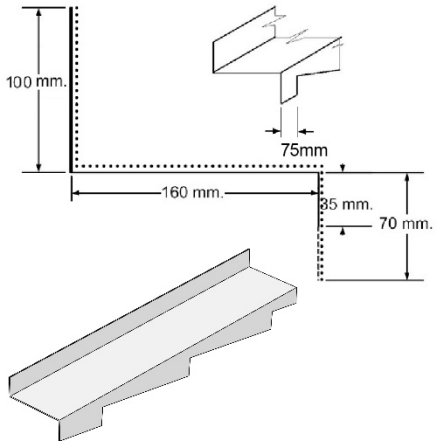

111 – Notched Sidewall RH	
Overall Length	2000mm
Cover Length	1850mm
Weight (Textured)	2.35 Kg
Weight (Satin)	1.64 Kg

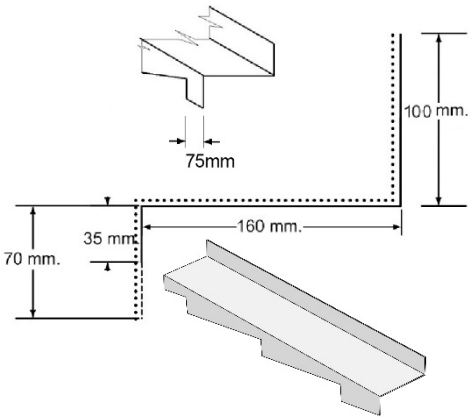

112 – A.E Apron	
Overall Length	2000mm
Cover Length	1850mm
Weight (Textured)	2.56 Kg
Weight (Satin)	1.83 Kg

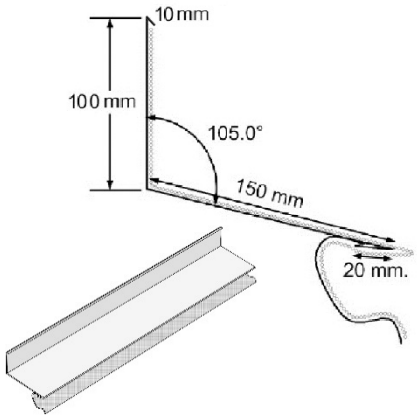

113 – A.E Barge	
Overall Length	2000mm
Cover Length	1850mm
Weight (Textured)	2.54 Kg
Weight (Satin)	1.81 Kg

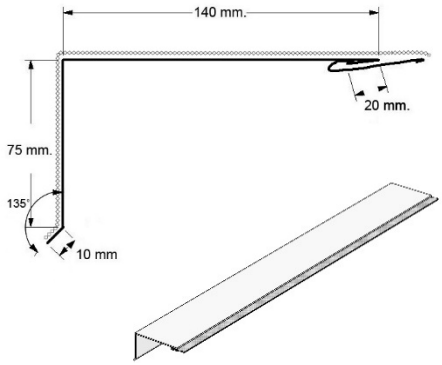

300 – Roman Birdstop NZ	
Overall Length	2000mm
Overall Cover	1850mm
Weight (Textured)	1.32 Kg

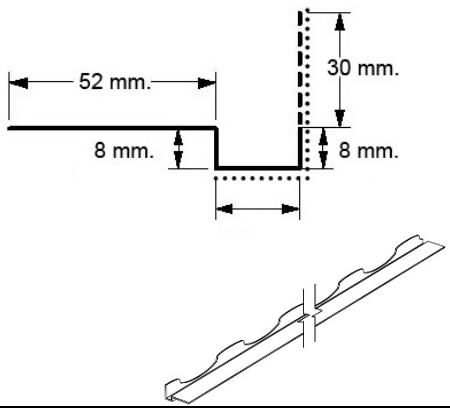

301 – Roman Short Course	
Overall Length	2000mm
Overall Cover	1850mm
Weight (Textured)	1.31 Kg

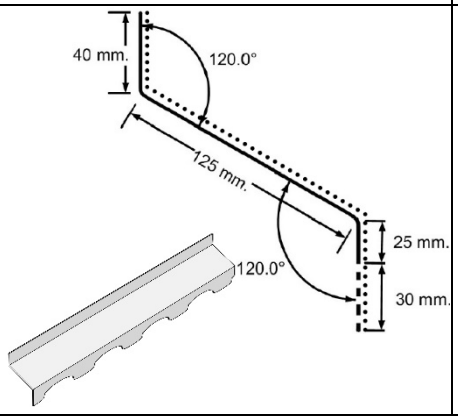

ABA20220988
APPROVED - Site Copy
Hastings District Council
20/09/2022

6. Detail Reference Guide

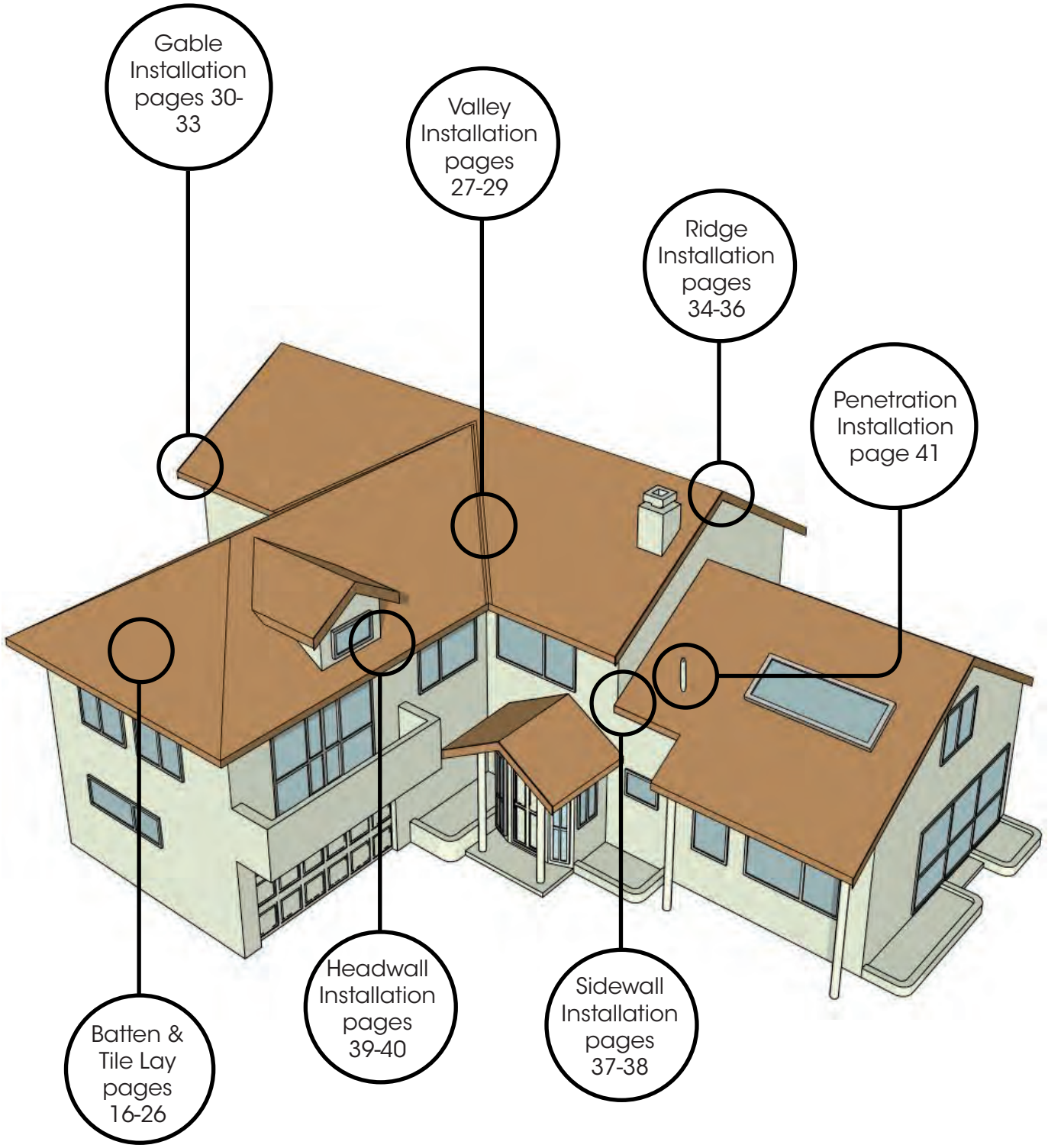

ABA20220988
APPROVED - Site Copy
Hastings District Council
20/09/2022

Preparatory Installation

1. Batten Spacing

Disclaimer: For purposes of uniformity, we have demonstrated 50x40mm battens as this is the most common batten size .This may be substituted for 50x25mm or 50x50mm for different rafter/truss spacings (see Tiling Batten Specifications).

A 50x40mm batten is placed directly behind the fascia around the entire roof. This will serve as the eave batten.

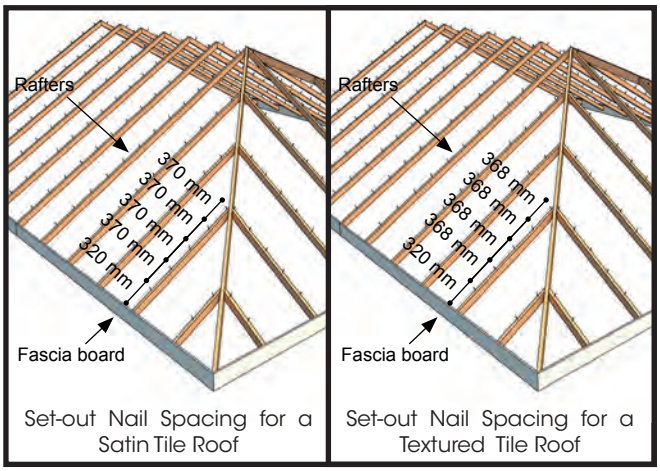

Set-out Nail Spacing for a Satin Tile Roof

Set-out Nail Spacing for a Textured Tile Roof

The next batten is placed 320mm from the outside edge of the fascia material to the front edge of the batten. Battens are then placed every 370mm (Satin) or 368mm (Textured) measured from the front edge of each batten continuing up the roof.

The set out can be done using a setout rod, which is made from a 50x40mm batten or measuring rod of similar thickness.

Measure every 370mm (Satin) or 368mm (Textured) measured up the setout rod and saw notches in the material, making sure the notches are accurate and that the bottom of the notch is square to the rod. The rod is then placed on the rafter and nails are placed in every notch so that you have a series of nails at 368mm or 370mm centres running up each rafter.

2. Batten Cutting

When placing the battens on the set out nails, care should be taken to stagger the joins across several rafters and not to have multiple joins on the same rafter going up the roof truss.

Place the battens on the setout nails mitring each batten onto the hip and valley boards. Make sure joining battens are centred on the rafters and cut ends off that are not straight. Then cut all other joins on the centre line of each rafter where each batten extends to. Then mitre cut each batten onto the hip and valley boards.

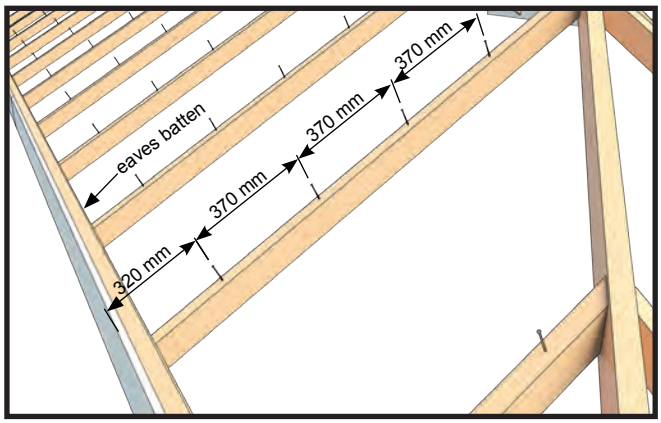

Set-out Nail Spacing for a Satin Tile Roof

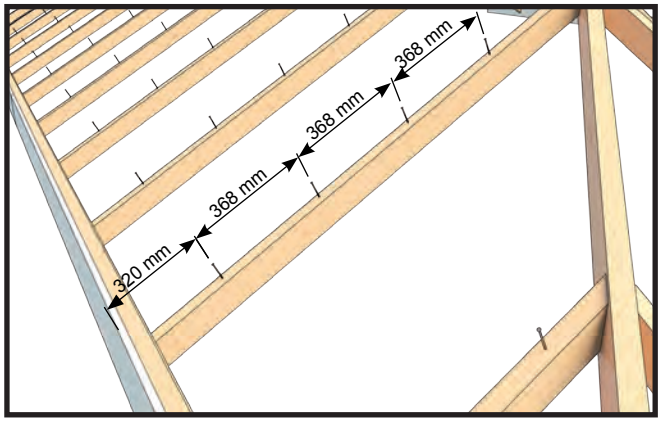

Set-out Nail Spacing for a Textured Tile Roof

ABA20220988
APPROVED - Site Copy
Hastings District Council
20/09/2022

Preparatory Installation

3. Underlay Installation

Once the battens are cut in completely the battens can be moved up to allow the underlay to be rolled out.

Self-supporting breather type building paper must be used. Starting at the bottom, roll out the underlay horizontally across the roof, ensuring that the lower edge of the underlay overhangs the outside edge of the fascia by a minimum of 40mm.

Once each run of underlay is run out, move the battens down to rest on pinout nails. This will enable the installer to continue up the roof plane by walking along these battens. Paper the whole roof, horizontal to the fascia line ensuring that each lap is no less than 150mm, unless it occurs directly underneath a batten, in which case it can be reduced to 75mm. Underlay is to be lapped over each hip and ridge line at least 150mm.

Where the roof meets a wall, the underlay must be folded and run up the wall no less than 200mm.

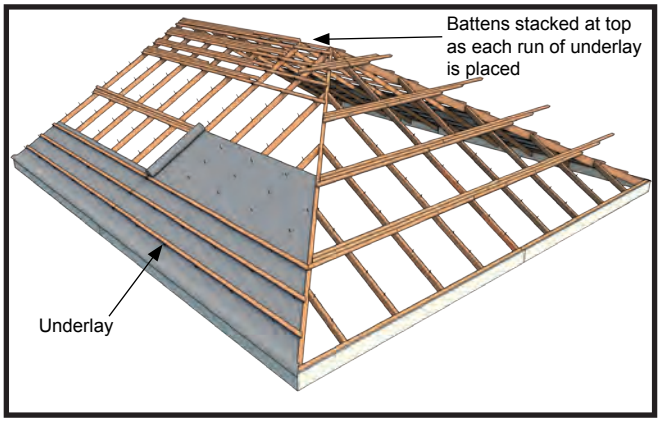

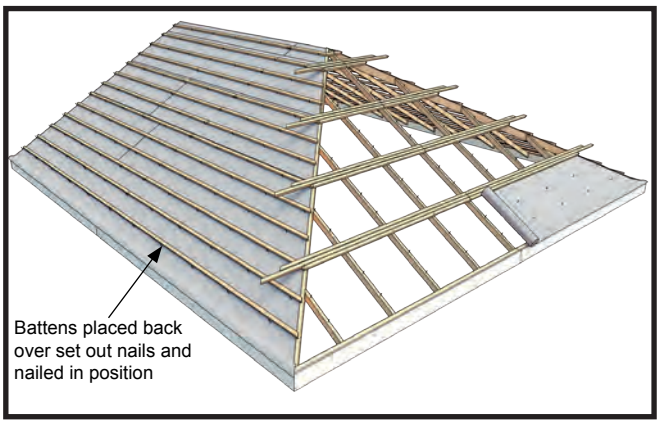

4. Batten Fastening

Battens shall be nailed through to the rafter with one 90 x 3.15mm nail at each intersection unless greater wind uplift resistance is necessary as stipulated in table 5.10 page 5.

Refer to section 9.0 Tiling Battens on page 6 of the manual, within General Information.

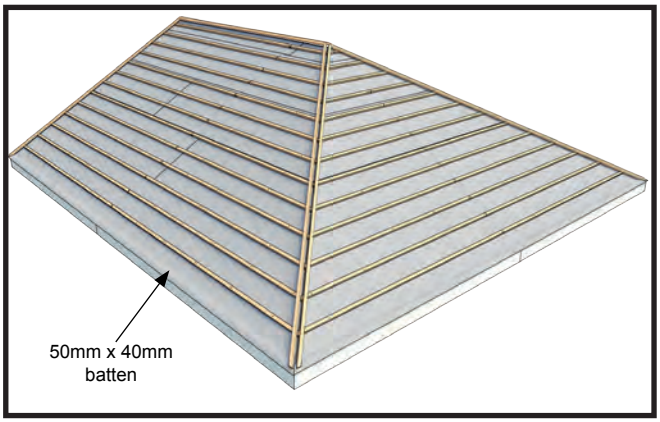

ABA20220988
APPROVED - Site Copy
Hastings District Council
20/09/2022

Preparatory Installation Continued

Tiling battens must be:

- H1.2 treated
- Douglas fir of moisture content <20%
- 50 x 25mm for 450mm rafter/truss spacing,
- 50 x 40mm for 900mm rafter/truss spacing
- 50 x 50mm for 1200mm rafter/truss spacing

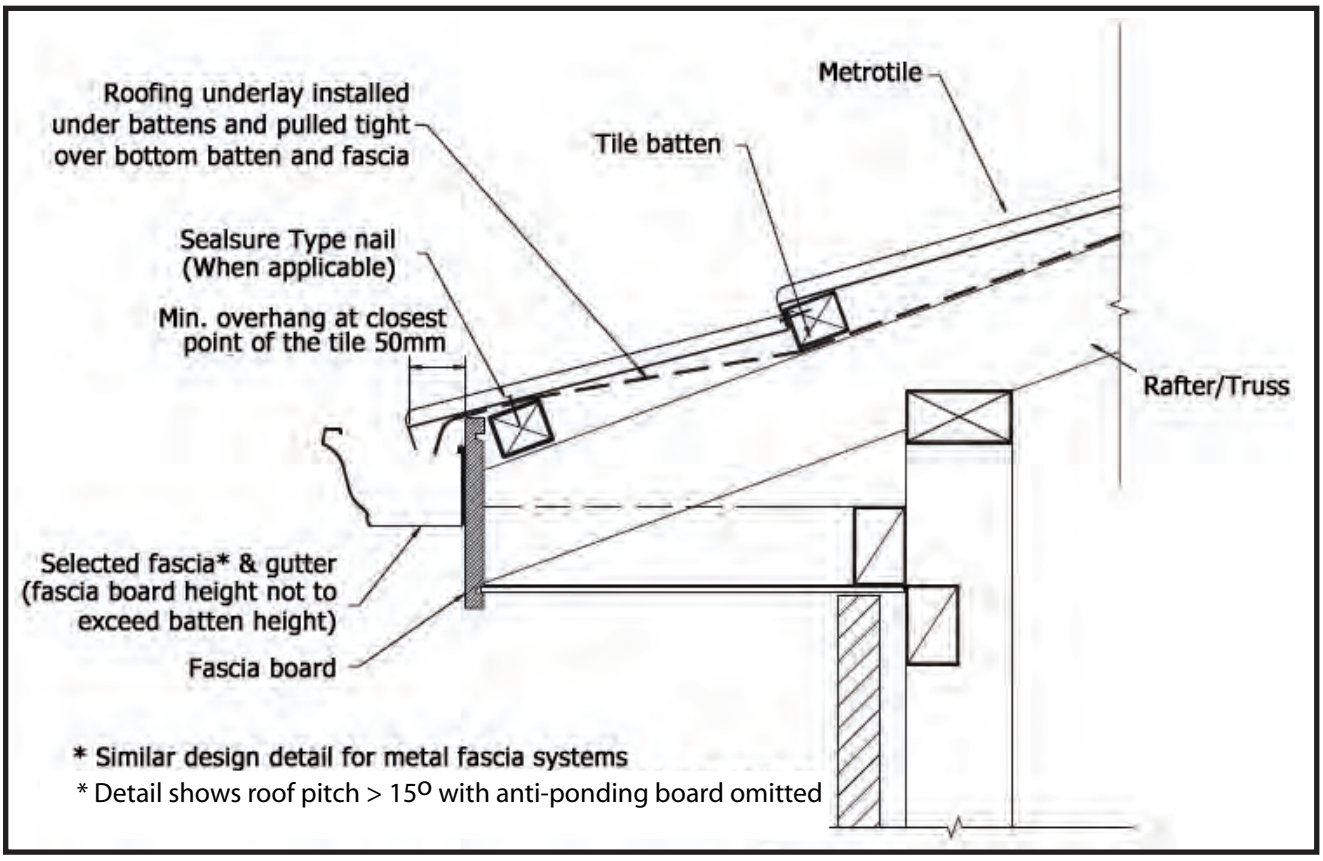

ABA20220988
APPROVED - Site Copy
Hastings District Council
20/09/2022

Tile Laying (Bond, Roman and Classic Specific)

Tile Laying

Tiles can be interlocked either right over left or vice versa (except Roman, only L over R) but should be laid with the laps facing away from prevailing winds or from discharging rain water pipes or valleys. Where possible the tiles should also be laid with the laps facing away from the normal line of sight. (Fig. 1.1)

Tiles are laid by lifting both tiles in the course above and sliding the next course under the nose of the tiles already in place. (Fig. 1.2)

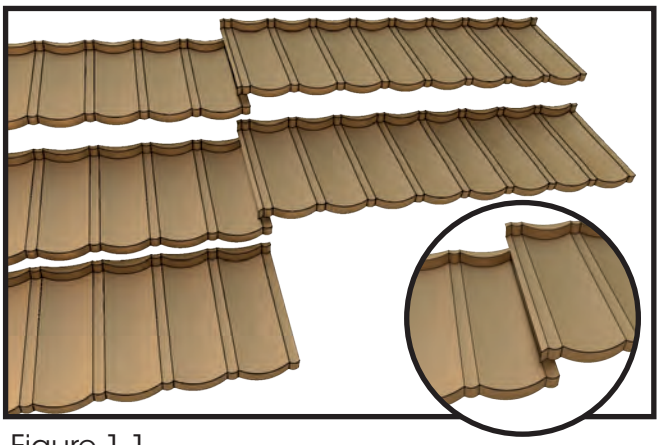

Figure 1.1

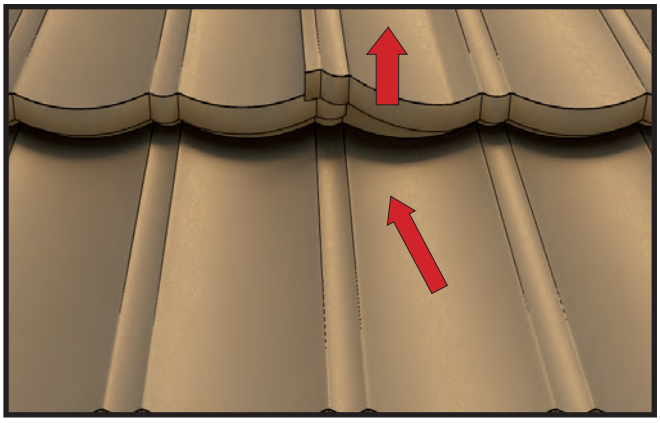

Figure 1.2

Tile Installation Procedure - Hip Roof

General instructions for tile laying as detailed above. On the second to top course (the higher most full tile course), lay the top corner of the first tile 150mm from the hip board. Continue to lay tiles towards the other hip until the last full tile will fit.

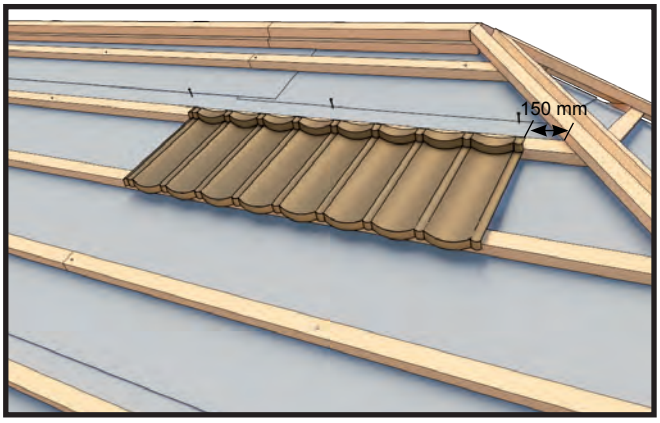

Figure 1.3

Secure these tiles by tacking through the back flange (Fig 1.3). Lay subsequent courses two at a time, both starting about the same distance from the hip board. (Fig 1.4 & 1.5)



Figure 1.4

ABA20220988
APPROVED - Site Copy
Hastings District Council
20/09/2022

Tile Lay Continued

Care should be taken to line up the corrugations. To reduce waste, use part tiles to complete rows within approximately 150mm of hip board (Fig 1.6). This allows each end of a full tile to be cut and bent to fill the gaps.

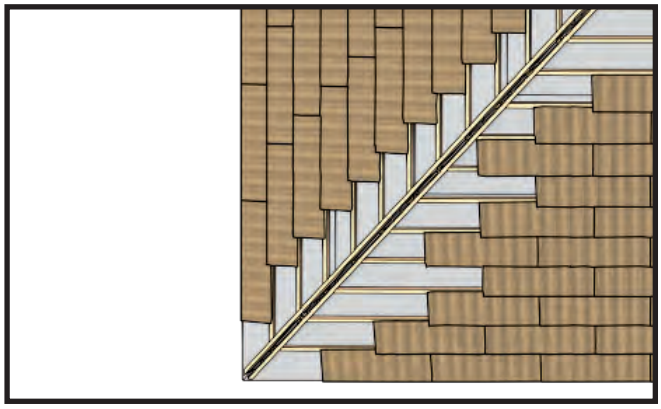

Figure 1.5

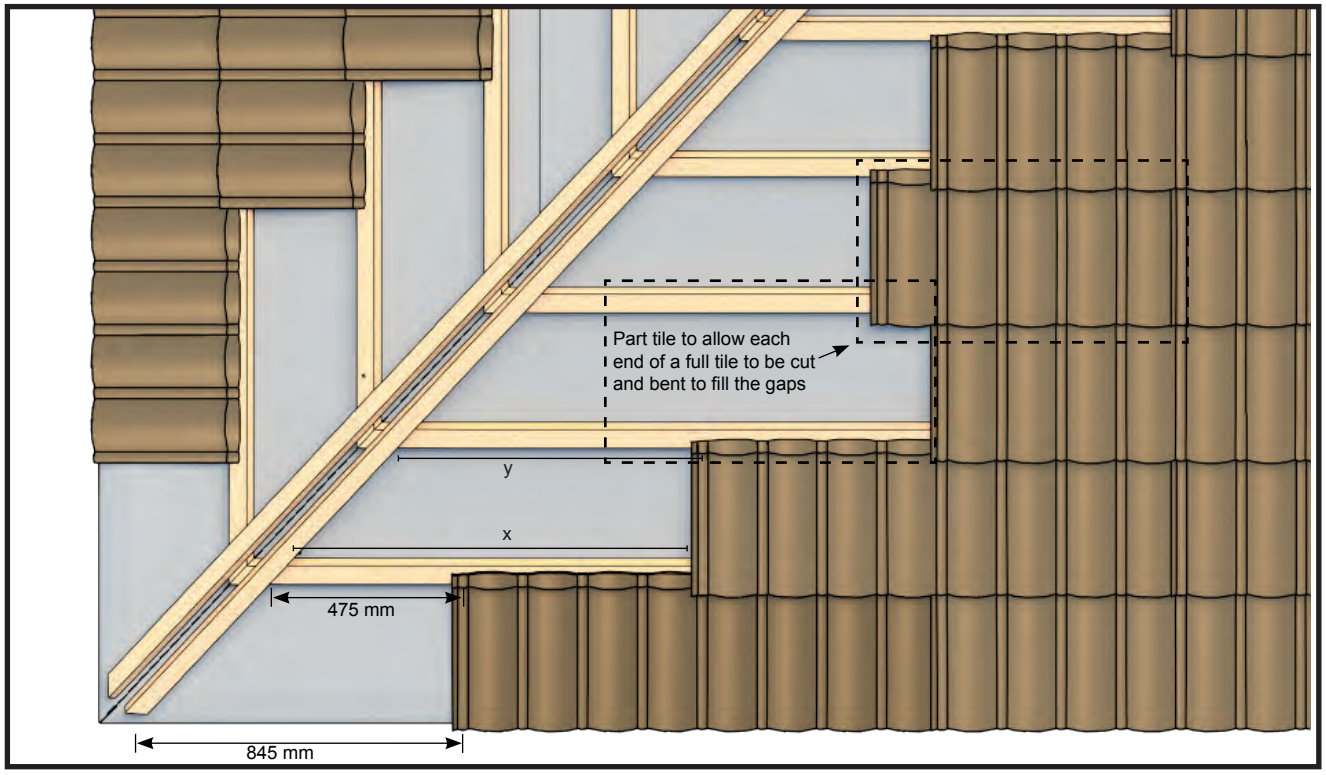

Figure 1.6

Measurements and Marking

Measurements are made on the roof, but tiles are normally marked, cut, bent and stacked on the ground.
To save time marking, cutting and bending each tile, it is best done by two installers - one to measure and the other to write the measurements down on a board or piece of paper as shown (Fig 1.7). To avoid confusion, cut, bend and stack tiles in strict order.

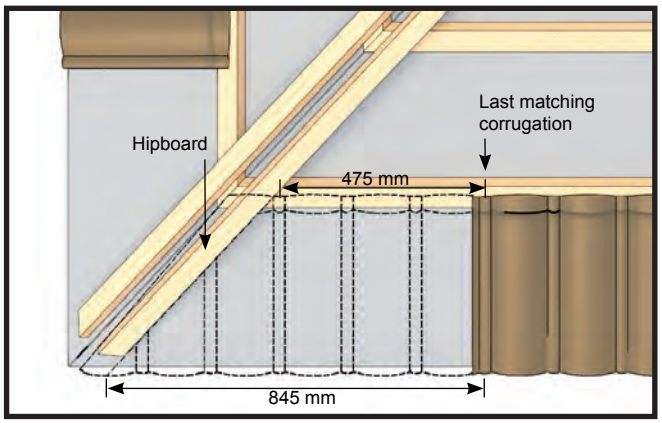

Figure 1.7

ABA20220988
APPROVED - Site Copy
Hastings District Council
20/09/2022

Tile Lay Continued

Note the following steps:

(i) The basic measurement (recorded on paper or board) is taken from the last corrugation on the bottom corner of the last full tile, to the hip board, along the front edge of the batten (Fig 1.7).

(ii) Measure and mark on the tiles with chalk or similar, the required measurements taken from the roof, ensuring the MATCHING corrugation of the overlapping tile to be cut, is taken as the measure starting point (Fig 1.7). This forms the BENDING line (Fig 1.9).

Add to the bending line measurement the height of the ridge board projection above the tile line 40mm. Mark on the tiles with chalk or similar. This forms the cutting line. (Fig. 1.9)

ALTERNATIVELY - Set a bevel to the angle formed by the hip board and tile batten. Place the bevel on the tile so that the measuring mark on the front of the tile lines up with the inside of the bevel. Mark along the inside of the bevel to give the BENDING line. Scribe the other side of the bevel to form the CUTTING line.

Each tile should supply two cut pieces leaving a minimum of wastage. Preferably a hip and valley cut from each tile will minimize this waste (Fig 1.9). However, two hip cuts will also provide a lower wastage factor.

Left-Hand Side Example

Top	475mm
Bottom	845mm
Top	*x* mm
Bottom	*y* mm
Top e.g.	342mm
Bottom e.g.	710mm

Right-Hand Side Example

Top	530mm
Bottom	900mm
Top	600mm
Bottom	970mm
Top	380mm
Bottom	750mm

Figure 1.8

ABA20220988
APPROVED - Site Copy
Hastings District Council
20/09/2022

Tile Lay Continued

Preferred and Low Waste Usage

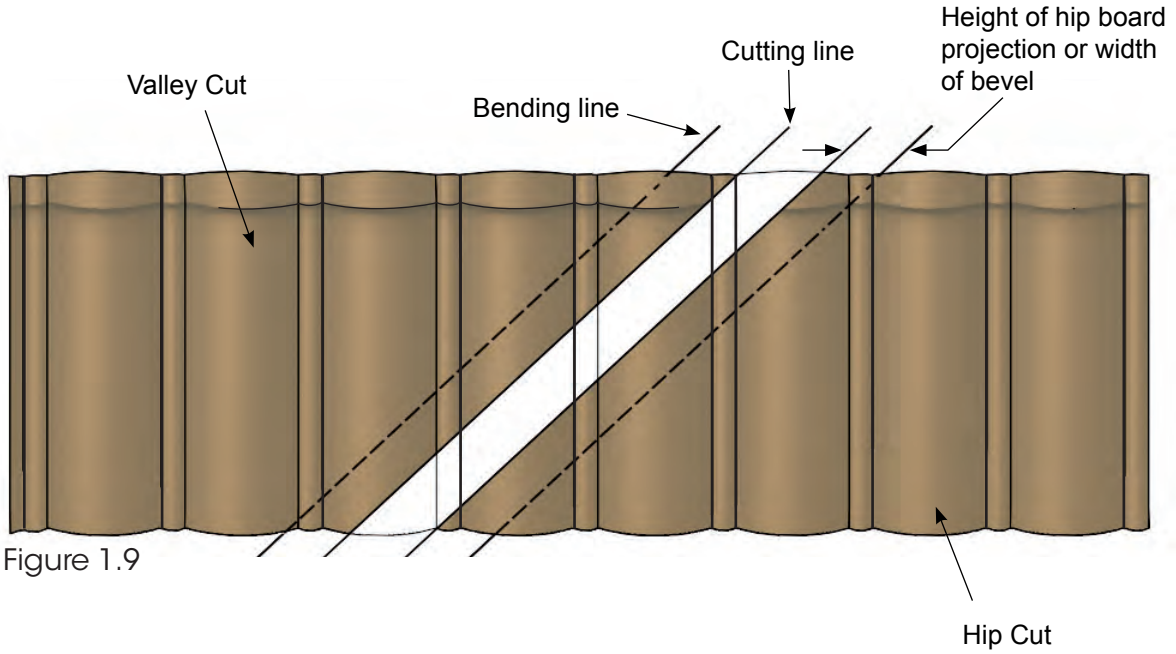

Figure 1.9

OR

Two Hip Cuts Per Tile

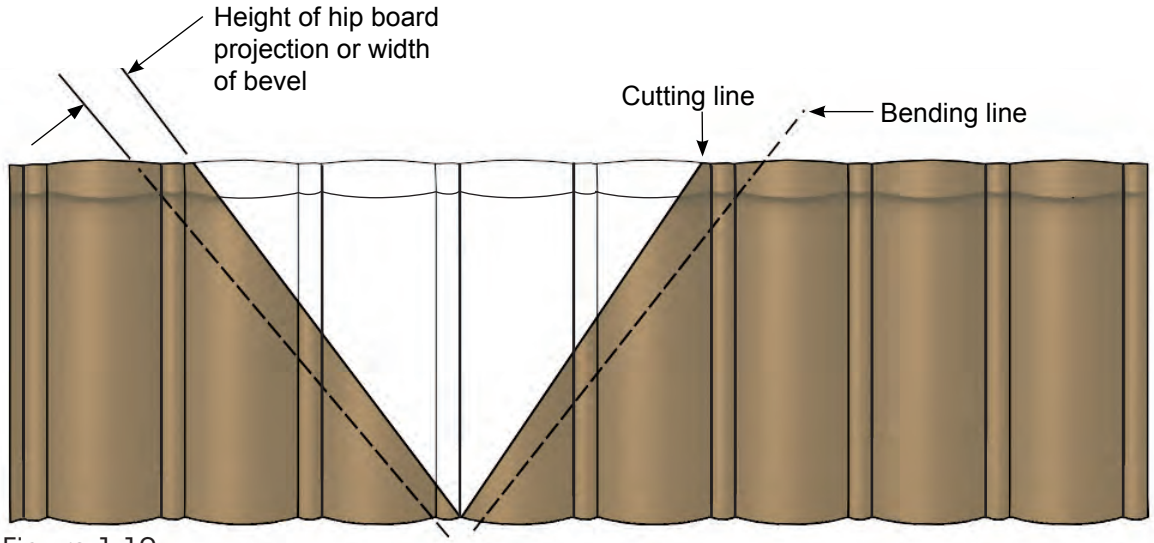

Figure 1.10

ABA20220988
APPROVED - Site Copy
Hastings District Council
20/09/2022

Tile Lay Continued

Hip Cutting

Use the guillotine to cut along the pre-marked cutting lines.

Hip Bending

Place the tile in the bender and line up the marks showing the bend line. Operate the foot controlled vice mechanism to hold the tile firmly, and bend the tile upwards.
Each cut tile will vary slightly in size, and as cutting and bending are done on the ground, it is very important not to mix up the individually cut tiles. Stack them in the sequence that they will be used. A simple practice is to cut off tiles in order and re-stack in order and then move to bending, repeating the process (Fig 1.8).

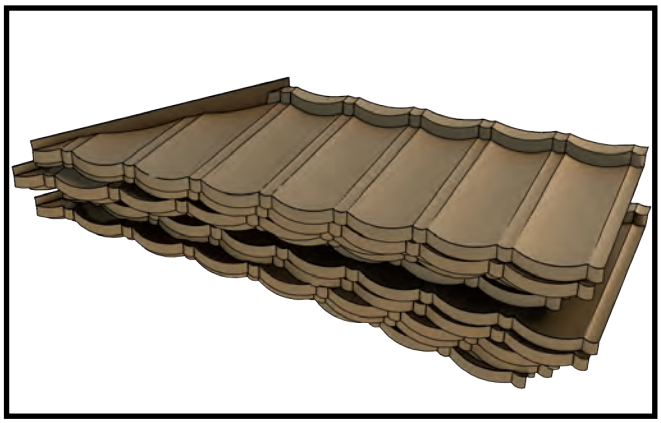

Figure 1.8

Installation of Cut Tiles

Start installing the cut tiles from the bottom course and work up the hip. Sometimes it is necessary to nail into the head of the tile to hold it in place before the next cut above is installed.
Install all cut tiles by nailing through the turn-up into the hip board, and one or more nails through the front edge into the battens (Fig 1.9).



Figure 1.9

ABA20220988
APPROVED - Site Copy
Hastings District Council
20/09/2022

Tile Laying (Shake specific)

As the Shake profile has a straight head and nose, the tiles can be laid anywhere along the length of the tile.
For aesthetic reasons, tiles should not be straight laid.

1.
Use a bevel to set the angle of the hip by placing the bevel in line with the batten and moving the bevel to meet the hip batten. Mark on the tile the cut and bend line allowing 40mm upturn. Proceed to cut and bend up enough cut tiles for the number of courses up the hip.

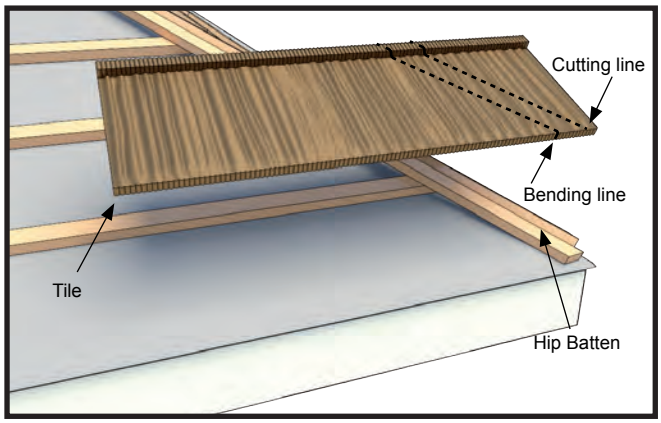

To minimise waste, it is advisable to use approximate half the tile for each cut so you can use the other half for a valley cut or another hip cut at the other end of the roof plane. These cut tiles should vary a little in size to try to avoid a pattern.

Note: Tiles must be turned up a minimum of 40mm against the hip battens, hip board or where they butt against a vertical or inclined surface.

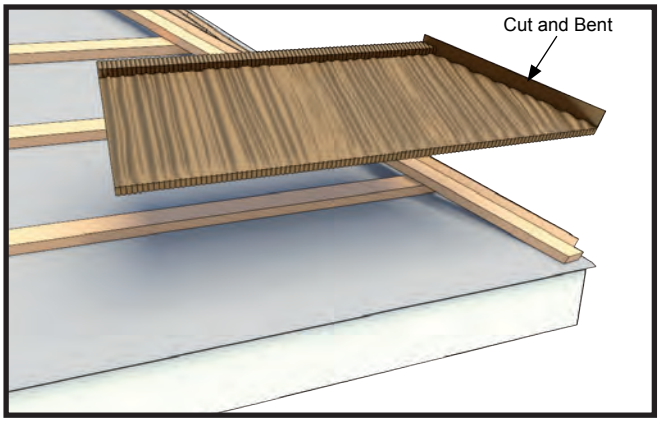

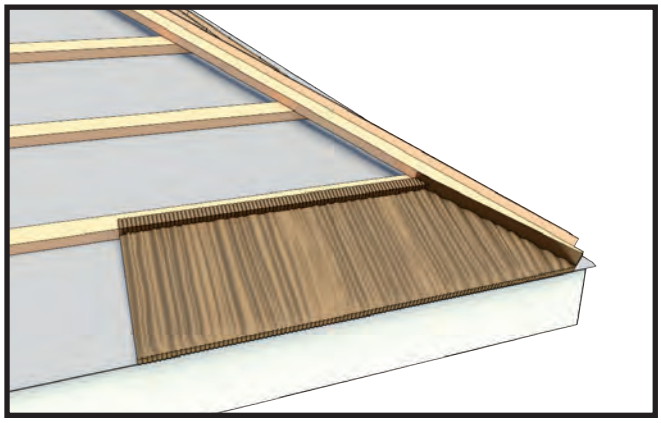

2.
Install the cut tiles by starting at the bottom course and nailing the cut tiles to the hip batten. Proceed up the hip length one tile at a time.

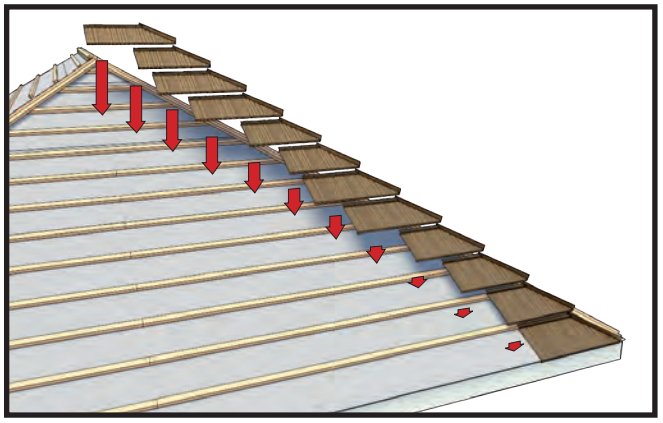

ABA20220988
APPROVED - Site Copy
Hastings District Council
20/09/2022

Tile Lay Continued

3.

Secure tiles down on batten, ensuring that they butt against hip batten as shown in step 2.

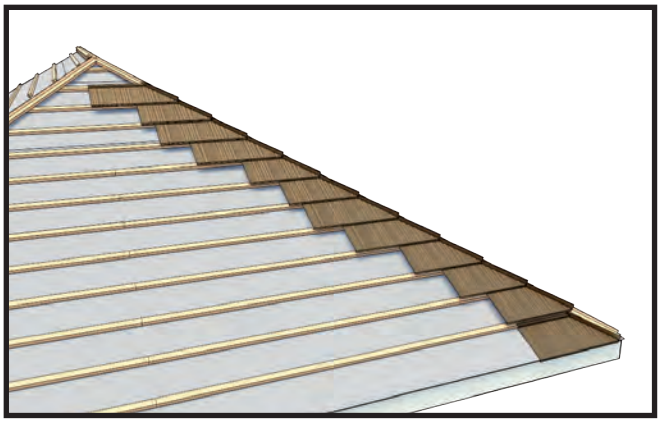

4.

In some instances it is desirable to cut and lay a half tile to ensure a cut tile is a desirable size.

Proceed to lay and secure all tiles out across length of roof.

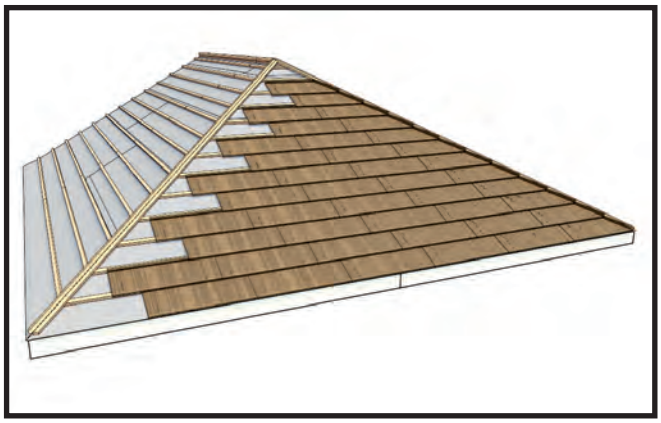

On the second to top course, continue to lay tiles towards the other hip until the last full tile will fit.

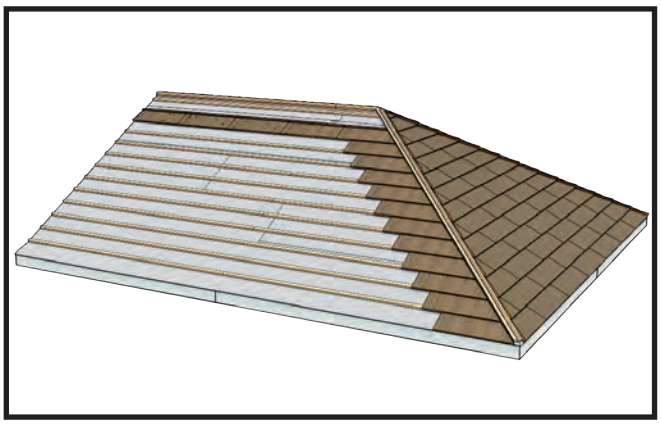

Then continue to lay tiles down to the fascia and then across the roof to complete the roof plane with full tiles.

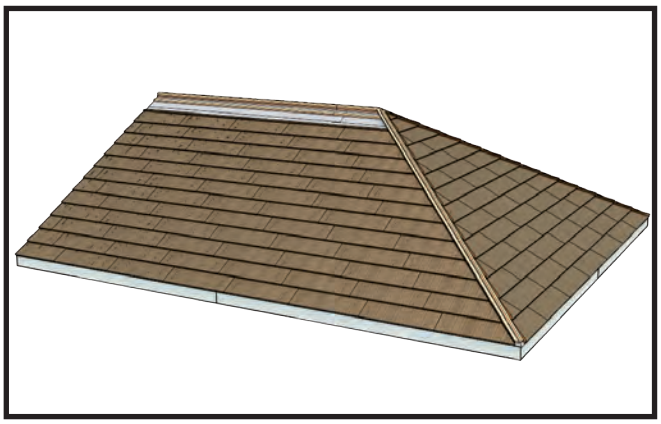

ABA20220988
APPROVED - Site Copy
Hastings District Council
20/09/2022

Tile Lay Continued

5.

Measure the bottom length of each cut from the centre of the lap to the hip batten for each cut for the full length of the hip. Mark with bevel, cut and bend similar to the other side of the hip.

Fit cut tiles once again starting from the bottom course. Care should be taken to ensure the cut tile fits underneath the full tile above.

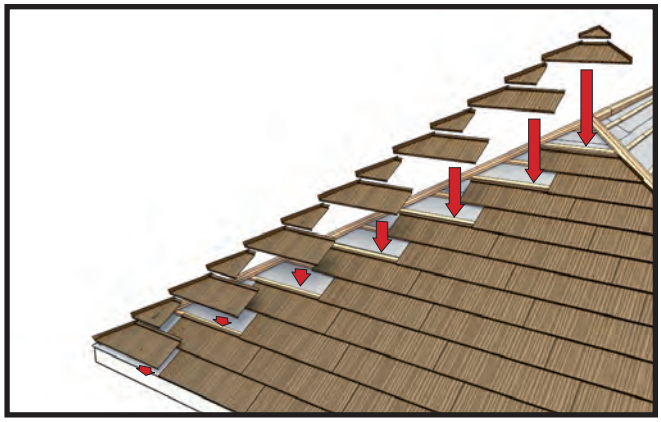

6.

Place in position and secure each tile at the lap, into the hip board and along the nose of the tile as required depending on the cut tile length.

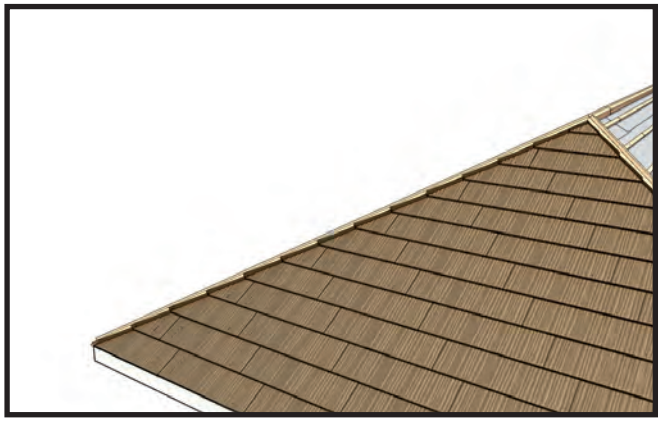

7.

Once complete, The hip battens are then ready to be covered with V Ridge Caps.

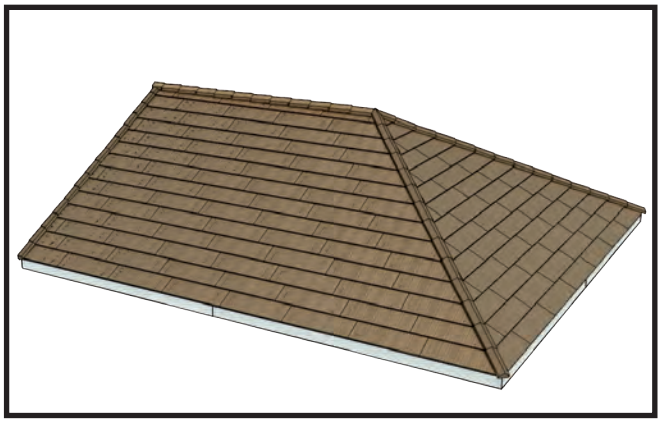

ABA20220988
APPROVED - Site Copy
Hastings District Council
20/09/2022

Valley Installation (Bond, Classic, Roman and Shake)

1.

The valley boards are installed between the valley jack rafters and flush with the roof plane to support the Metal Tile Valley. Valley boards are required to be set with their outer edge a minimum of 150mm (fig 1.11 pg 28) from the centre line of the valley. Valley boards are required to support a point load of 1.1.kN, which is taken to be the weight of a tradesperson with a bag of tools. Valleys are installed so that water discharges over the back of, and into, the eaves gutter.

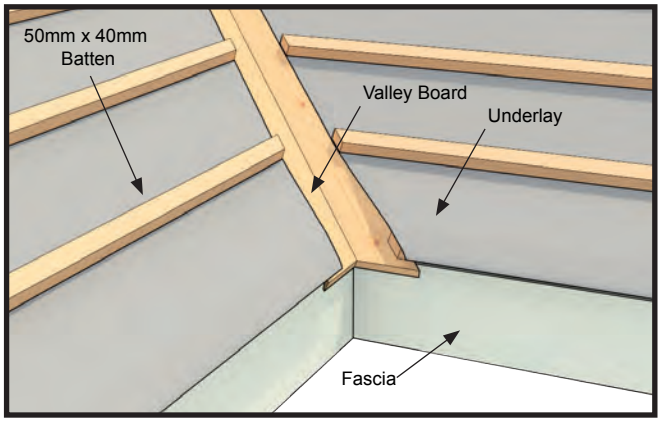

Valley Tray

The valley tray is cut to match the angle of the fascia boards (A). It is then further cut to create a downturn of 20mm (B). The valley end is then corrected to discharge in to eaves gutter (C). The valley tray should protrude into the gutter in line with the bottom row of tiles (50mm).

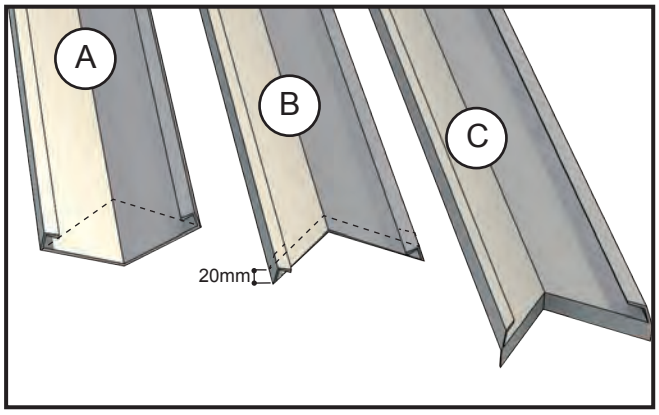

Fastening

First run out a strip of roofing underlay over the valley board to prevent the valley tray from coming into direct contact with the valley board.
Valleys shall be secured by 90mm x 3.15mm H.D. Galvanised nails fixed into the valley board at no more than 1.0m centers and bent over the top lip of the valley to hold the valley tray in place.

2.

Under no circumstances must the fasteners penetrate the valley surface.

Where joins occur the minimum overlap is to be no less than 200mm.

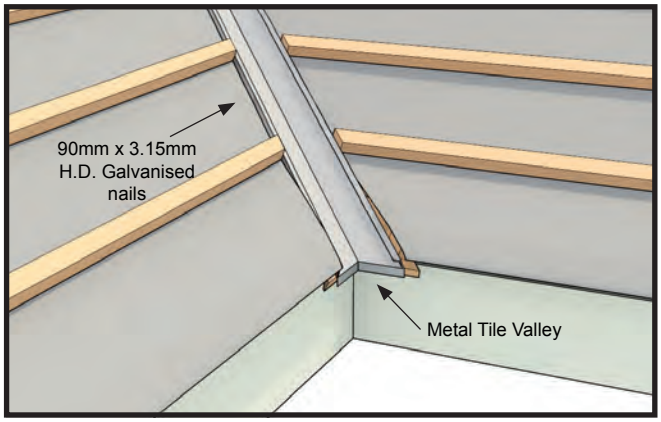

ABA20220988
APPROVED - Site Copy
Hastings District Council
20/09/2022

Valley Installation Continued

3.

Valley trays should be cut at the apex of the valley, as depicted in the right-hand picture. Silicon is placed on both trays before they are sealed in place.
The top end of the valley should be turned up against the hip or ridge battens to the height of the batten. Where two valleys meet over a dormer they are cut, shaped, joined and sealed so that they form a continuous valley.

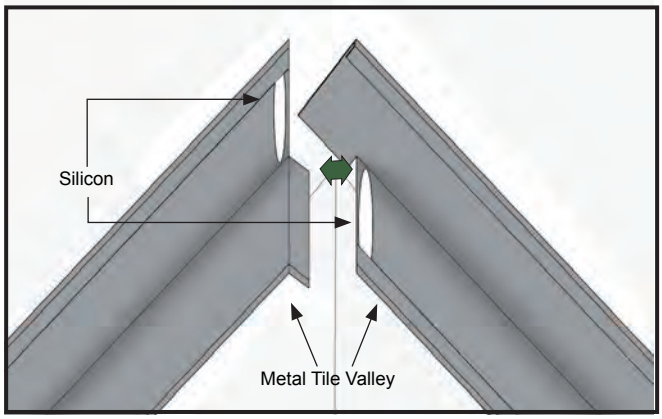

Tile Measuring, Cutting and Bending

Tile measuring, cutting and bending for valleys is carried out as for hips, except that the bends are downwards.

Measure the distance from the last corrugation of the installed tile to the desired finished tile line in the valley (approximately 40mm to each side of the valley centre line). This measurement is done at the top and bottom of the installed tile. This is the BEND line. To this measurement, add the depth of the valley from the FINISHED TILE line minus 10mm which is the amount the tile will drop into the valley. This is the CUTTING line and will result in a tapered downturn.

The tile edge should be bent down to a minimum of 5mm from the valley floor.

Cut with the guillotine and bend down the tile at the bend line.

Install in the normal manner, endeavouring to place one nail as close to the valley as possible to the end of the batten adjacent to the valley tray.

DO NOT nail in the valley itself.

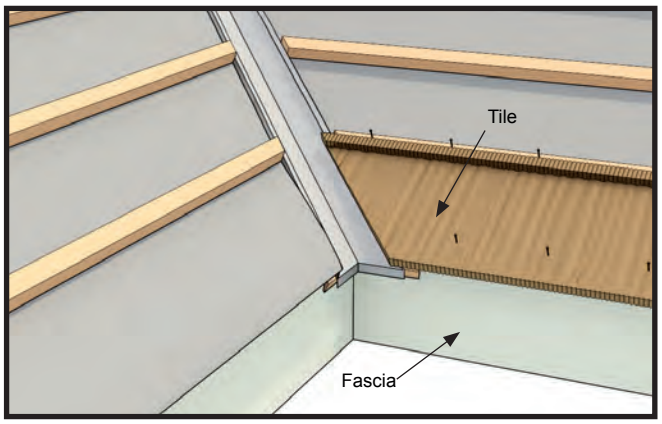

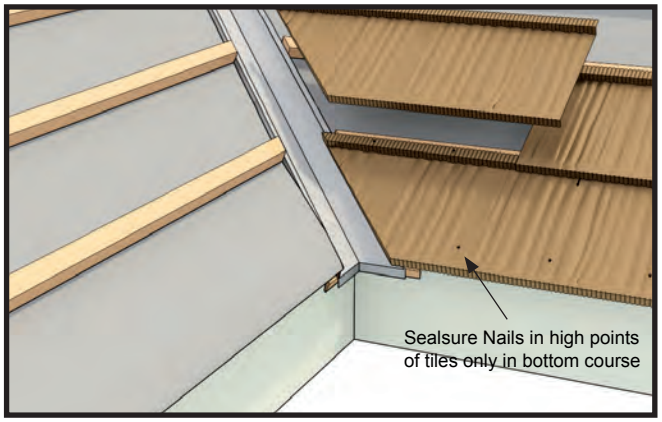

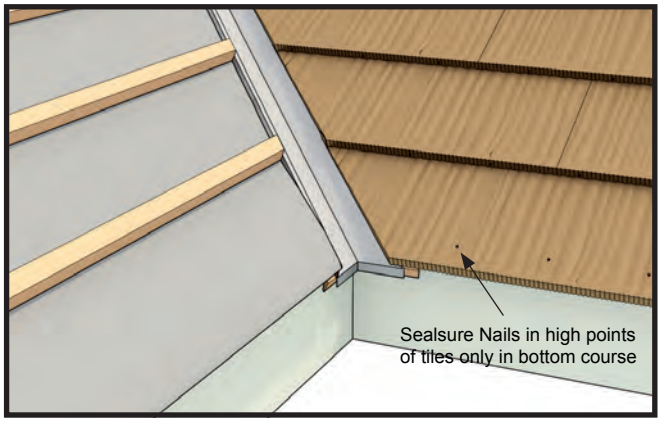

ABA20220988
APPROVED - Site Copy
Hastings District Council
20/09/2022

Valley Installation Continued

7.
The gap between tiles on opposing sides of the valley must be a minimum of 50mm.

Valley boards must be treated H3.2 and must be separated with underlay between any tile or flashing and the treated timber.

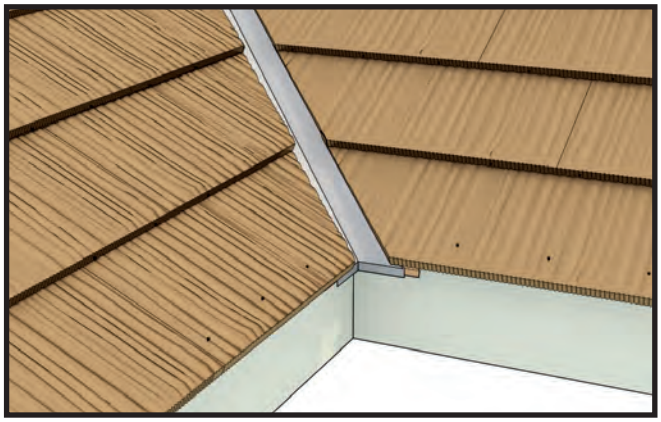

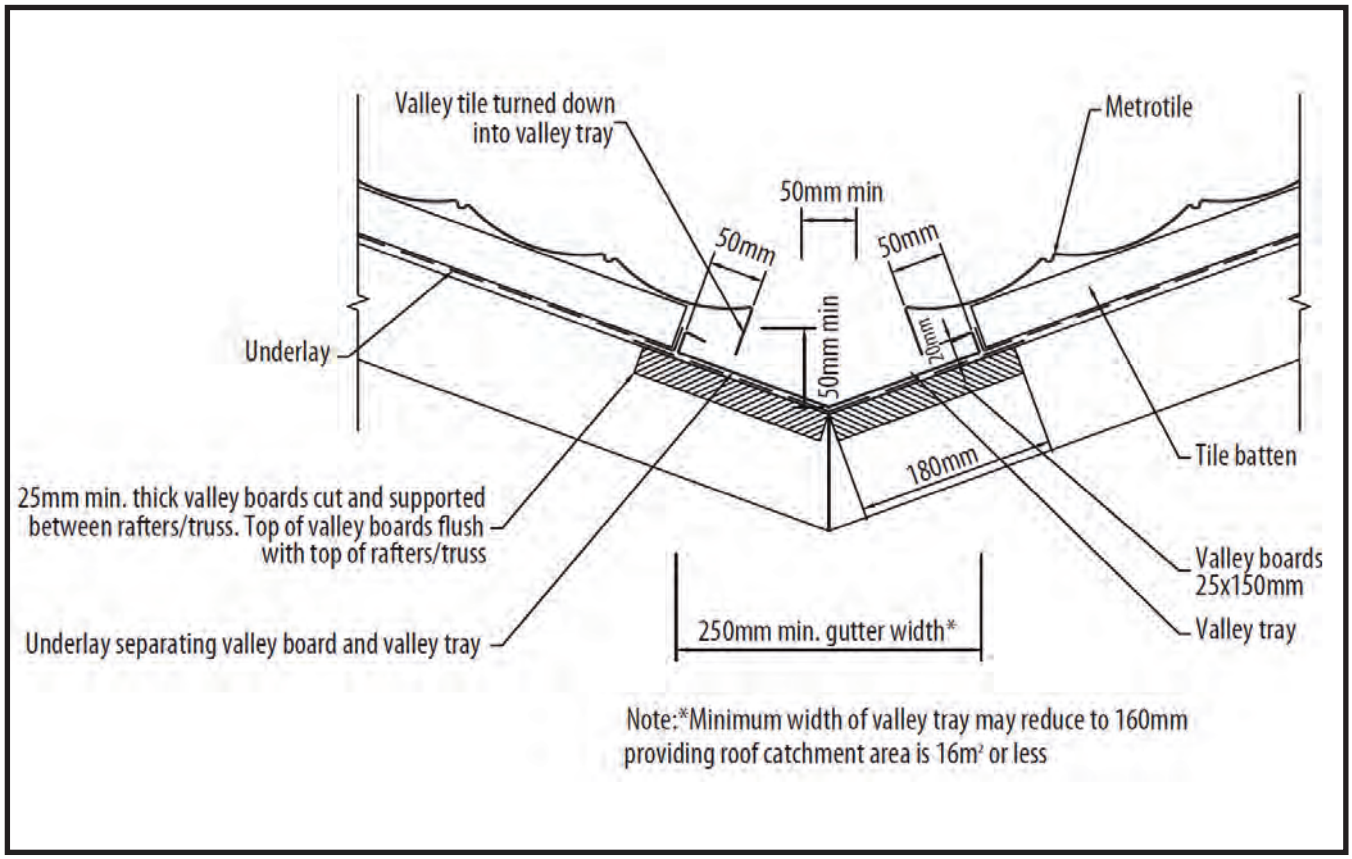

ABA20220988
APPROVED - Site Copy
Hastings District Council
20/09/2022

Gable Installation (Bond, Classic, Roman and Shake)

Tile ends are turned up a minimum of 40mm and installed against the barge batten that is covered by a Standard Barge, Barrel Trim or V Ridge (as shown). Alternatives include under a metal fascia system where there is no barge batten or a hidden gutter. Where a hidden gutter is used, tile edges should be turned down into the gutter by a minimum of 20mm.

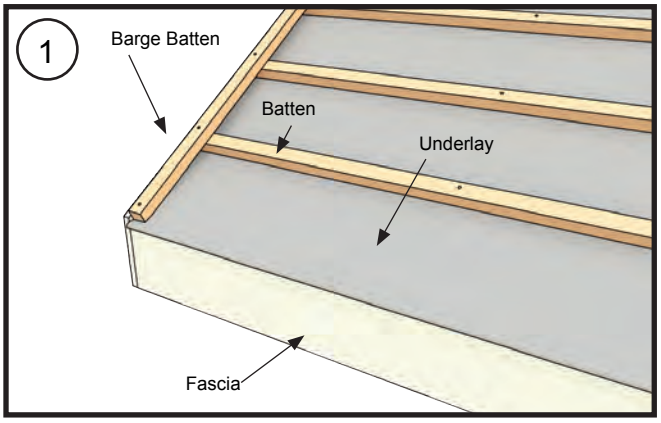

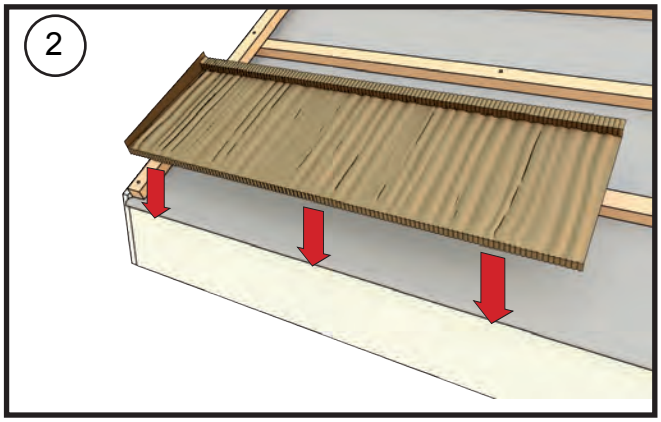

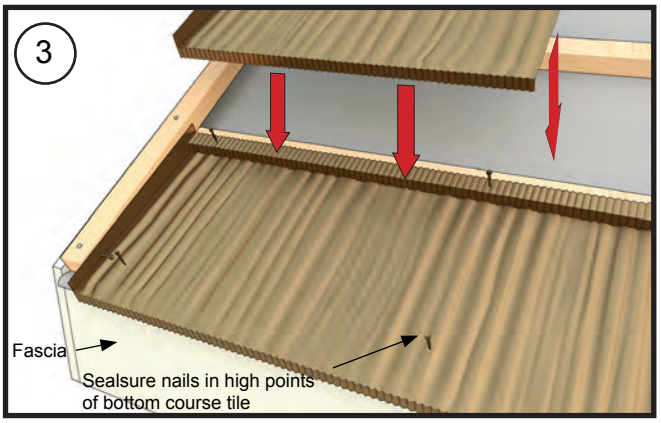

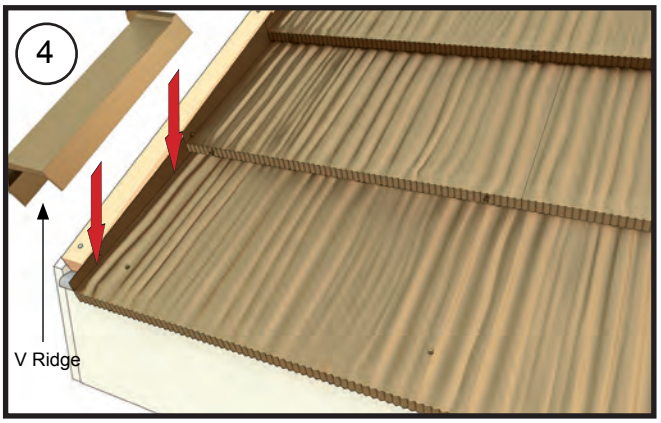

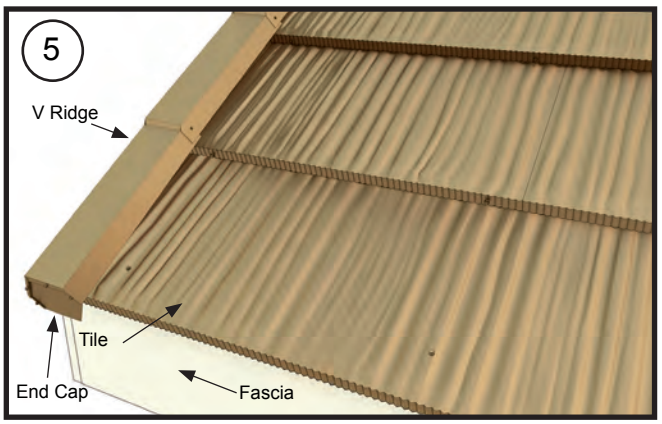

ABA20220988
APPROVED - Site Copy
Hastings District Council
20/09/2022

Gable Installation Continued

Standard barge Timber Fascia

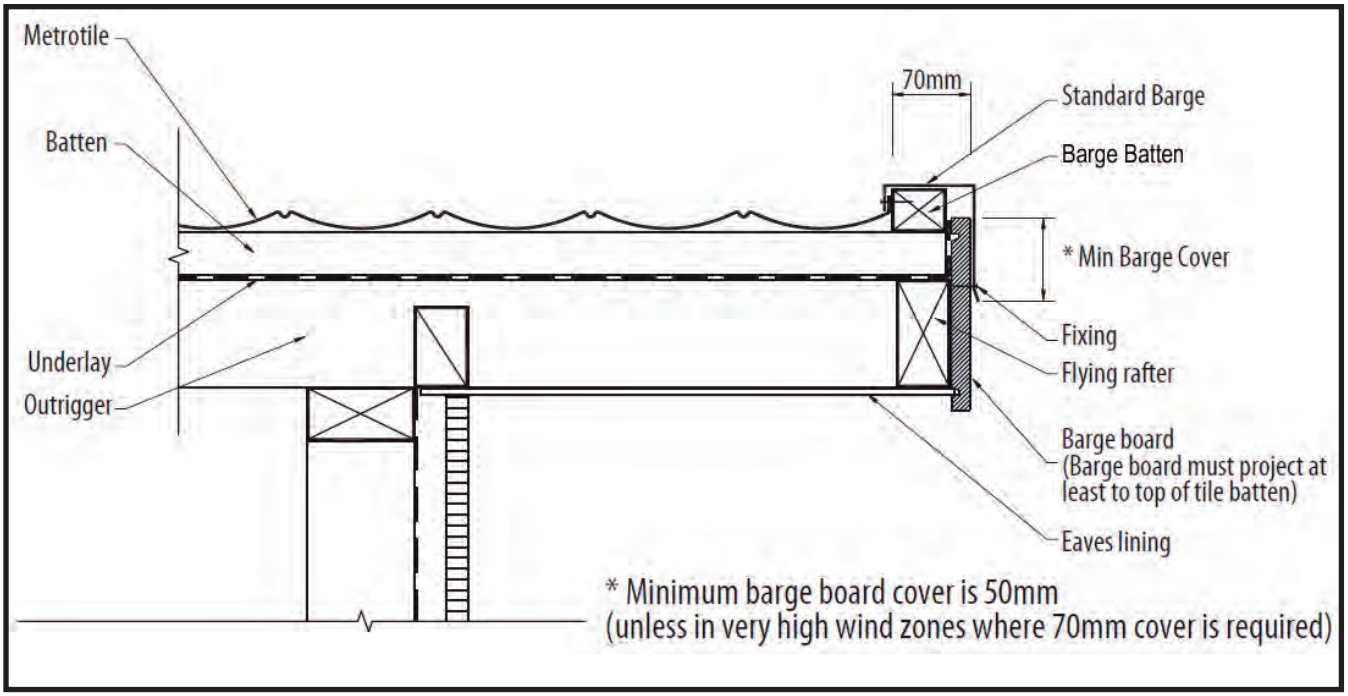

Barrel Trim (shown) or V Ridge Timber Fascia

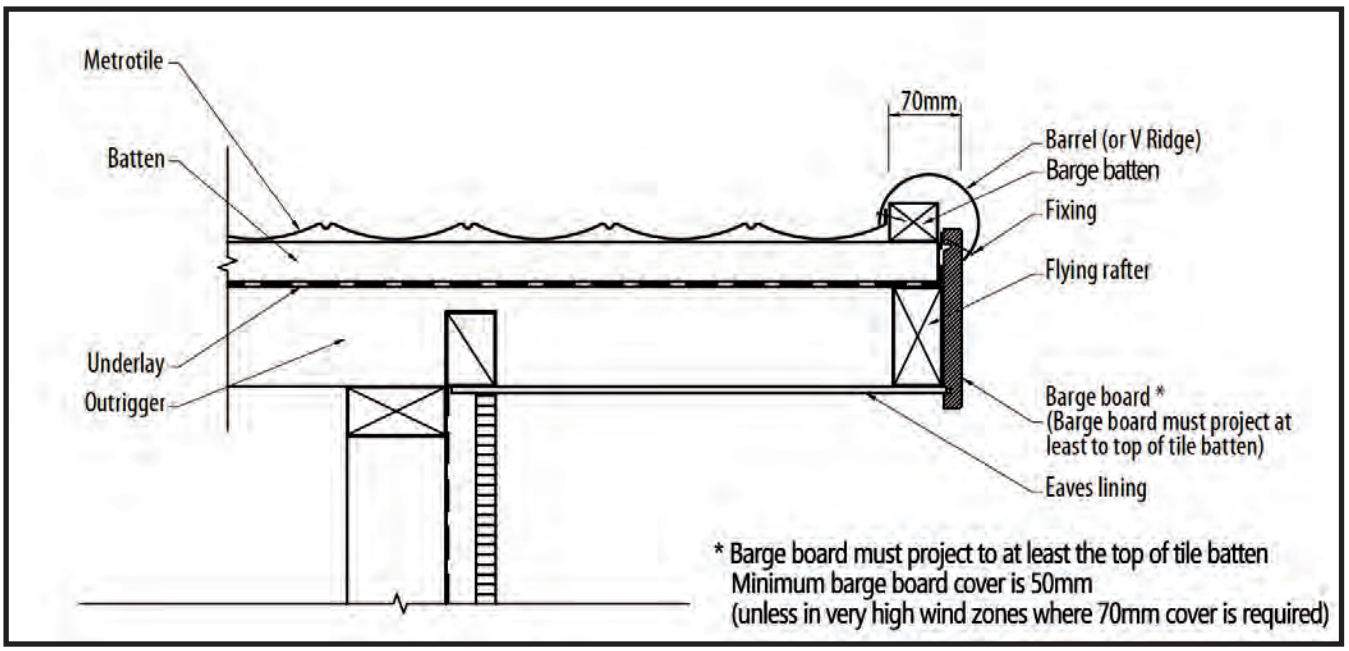

ABA20220988
APPROVED - Site Copy
Hastings District Council
20/09/2022

Gable Installation Continued

Barrel Trim (shown) or V Ridge or Standard Barge to Metal Fascia

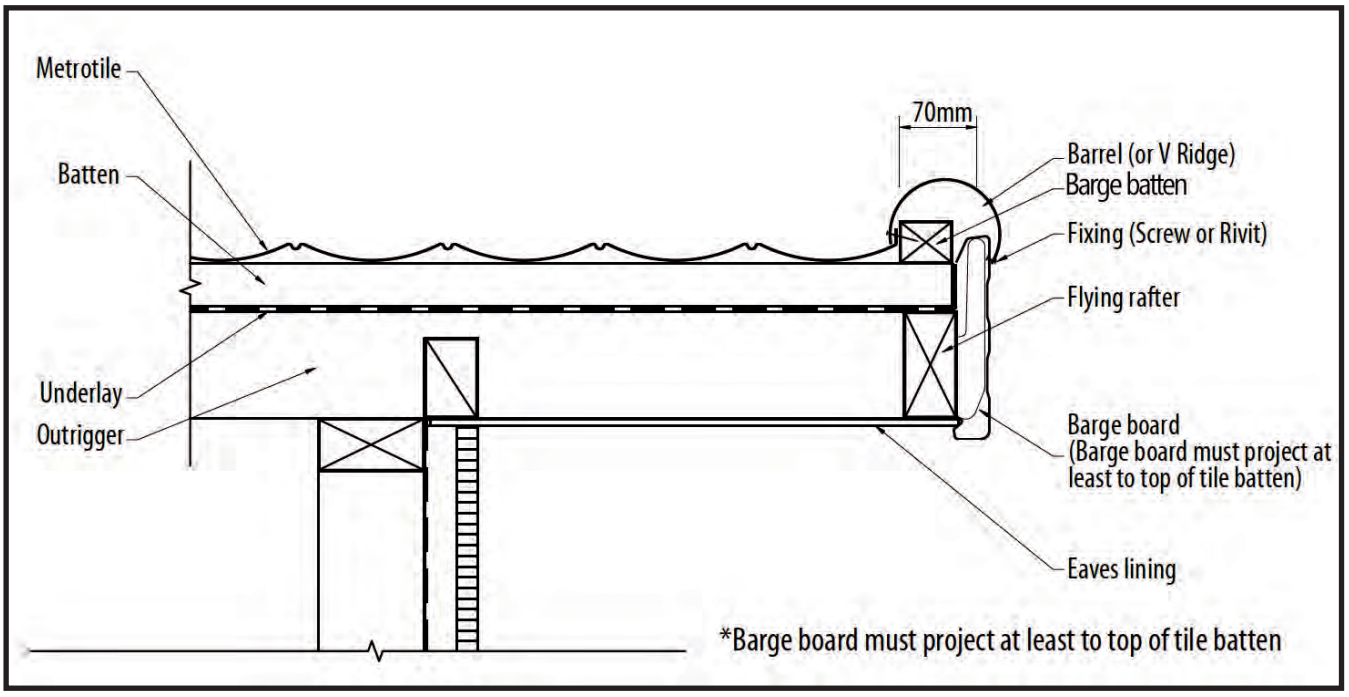

Turn Up - Metal Fascia

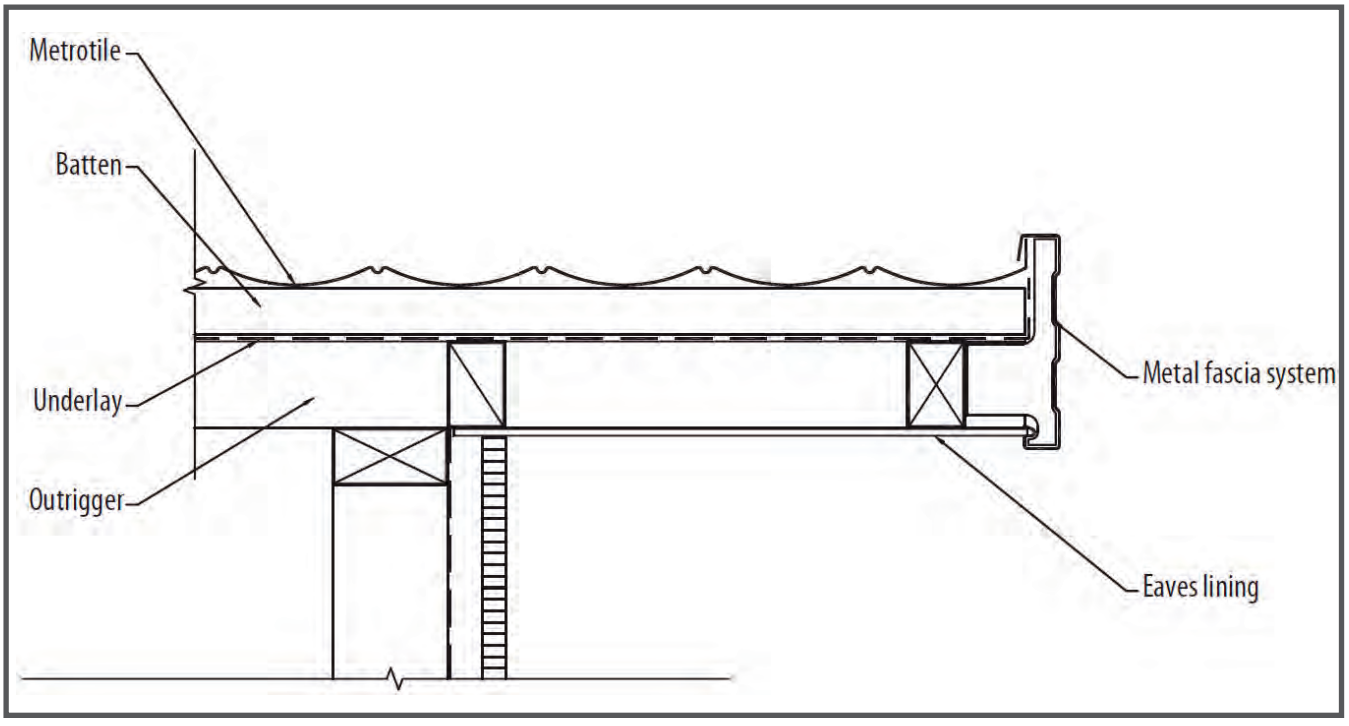

ABA20220988
APPROVED - Site Copy
Hastings District Council
20/09/2022

Mansard Roof Including a Change of Roof Pitch

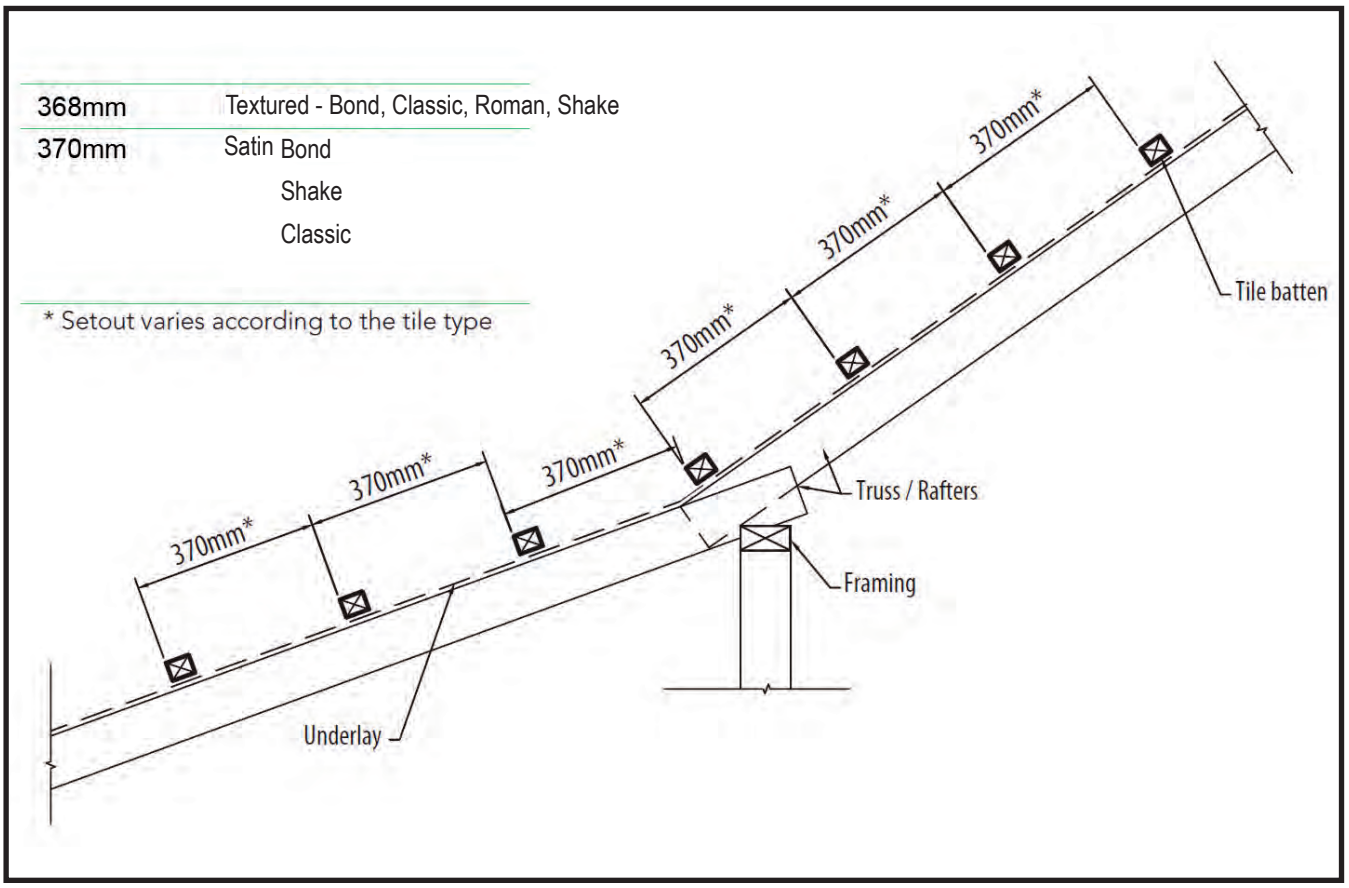

Batten set out follows pitch change

As illustrated, where the roof line changes pitch, a batten is placed at this point. In situations where you have a pitch change and a specific number of full tiles cannot be laid down, it is suitable to bend a full tile lengthwise to compensate.

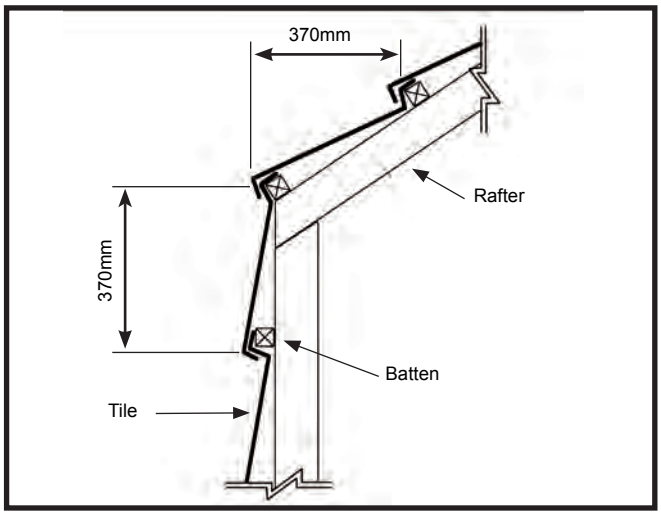

ABA20220988
APPROVED - Site Copy
Hastings District Council
20/09/2022

Ridge Installation

It is recommended to fit the V Ridge or Barrel Trim up all hips and gables before moving to the ridge. The starting and finishing trim on the ridge must be lapped over the hip or gable trim with silicon applied under the lap to create a waterproof seal. To ensure a watertight joint and prevent the ingress of water, a tight fit is required between the tile and the ridge cap.
Note: Tiles must be turned up a minimum of 40mm against the batten, hip board or where they butt against a vertical or an inclined surface.

The ridge trim can be fixed through the side of the trim using fasteners. It is also recommended that the silicon spots be covered for aesthetic reasons using the Touch-Up Kit.

Gable Starter V Ridge

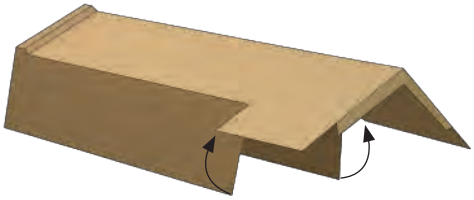

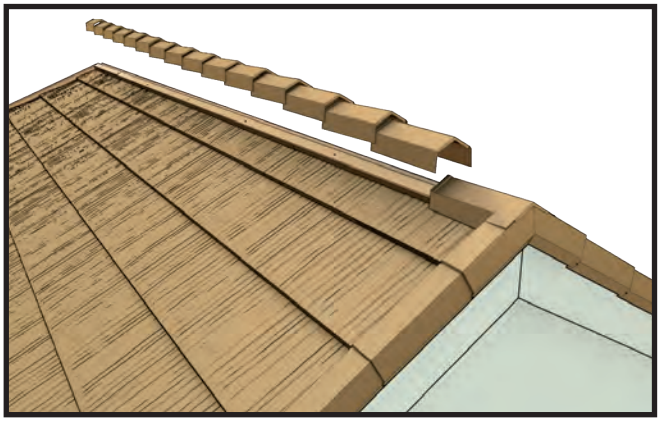

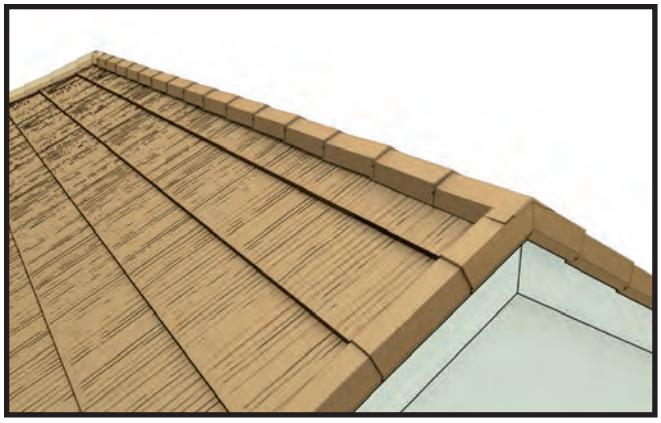

ABA20220988
APPROVED - Site Copy
Hastings District Council
20/09/2022

Ridge Installation Continued

Barrel Trim (shown) or V Ridge

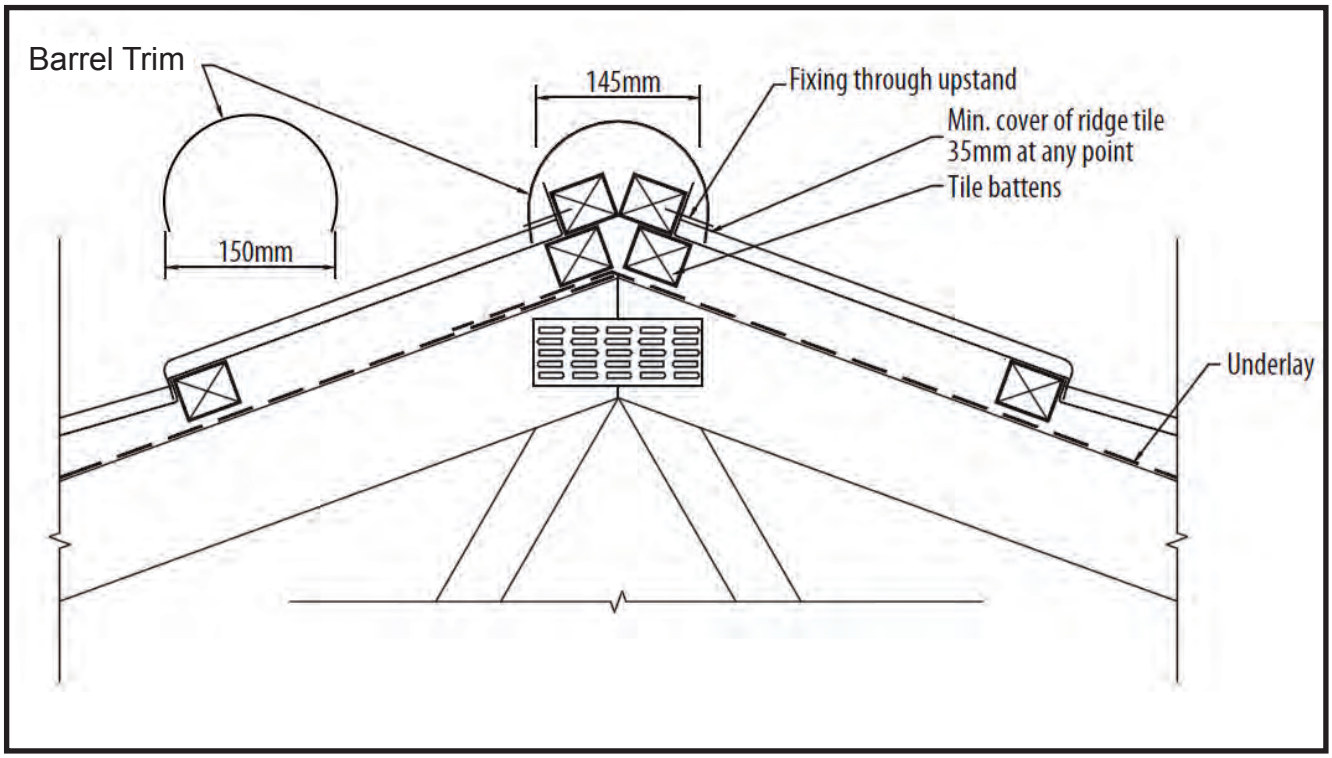

Standard Ridge

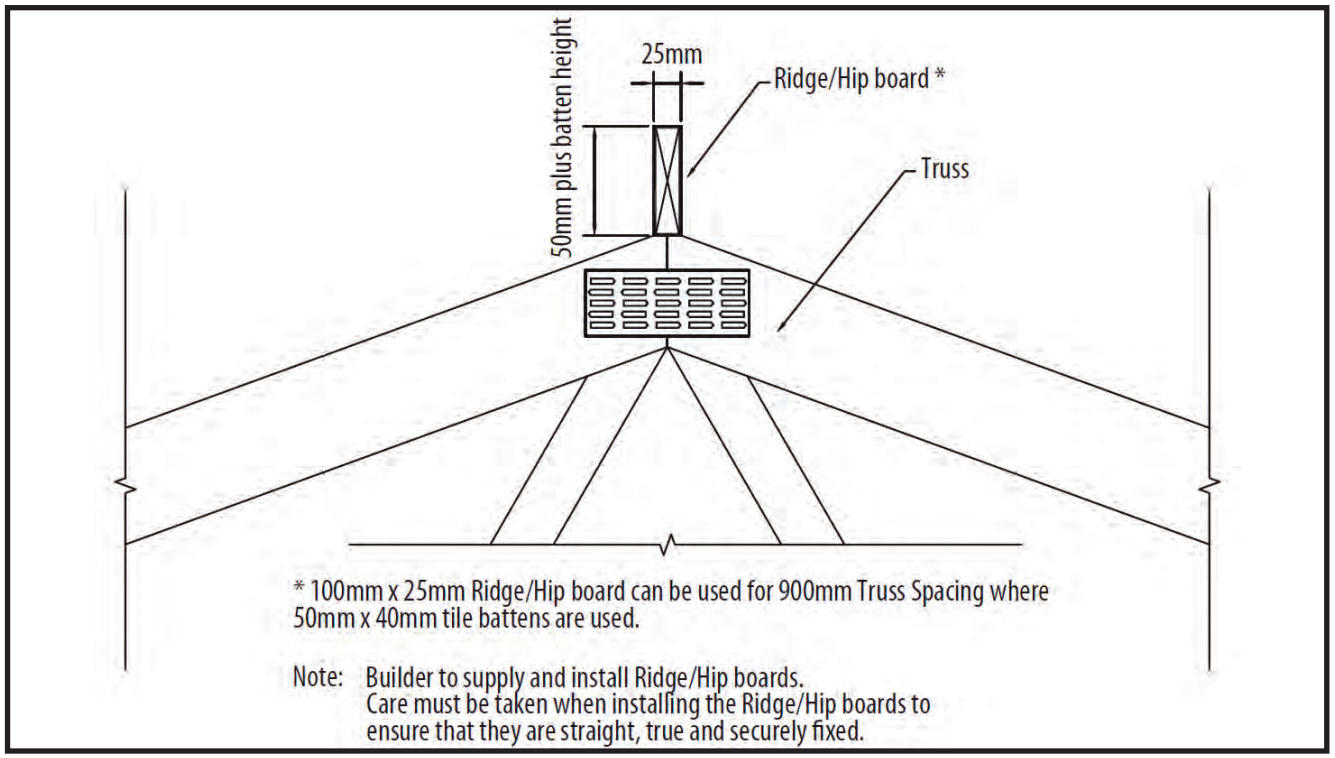

ABA20220988
APPROVED - Site Copy
Hastings District Council
20/09/2022

Ridge Installation Continued

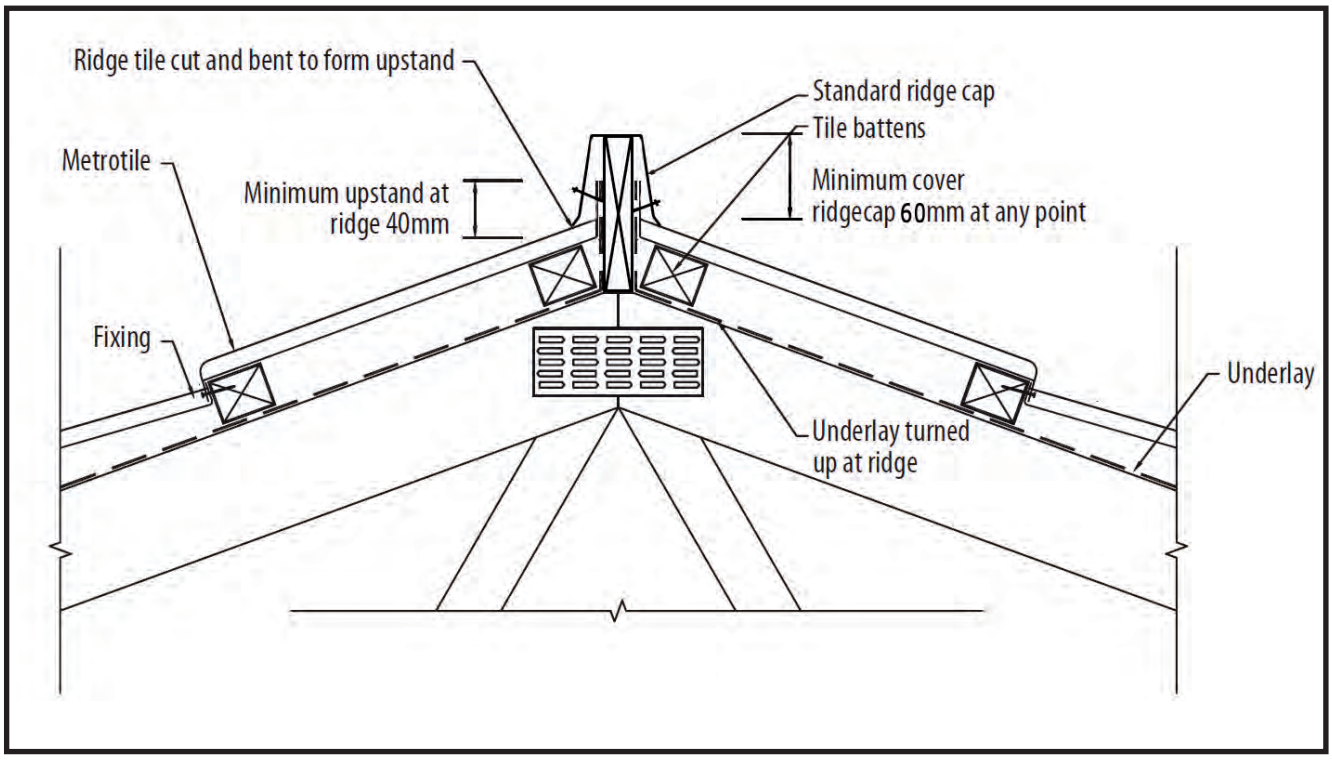

ABA20220988
APPROVED - Site Copy
Hastings District Council
20/09/2022

Sidewall Installation

Flashings at the ends of roofs, where the wall continues past the roof, require a stopend flashing that ensures water is directed into the gutter. Sufficient material should be left standing out from the wall so that cladding installers can ensure a weather secure finish.

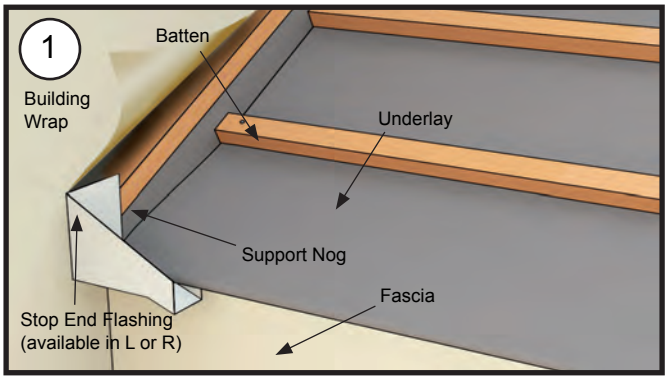

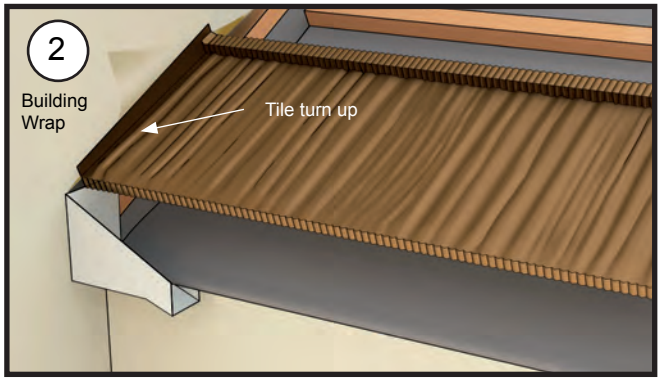

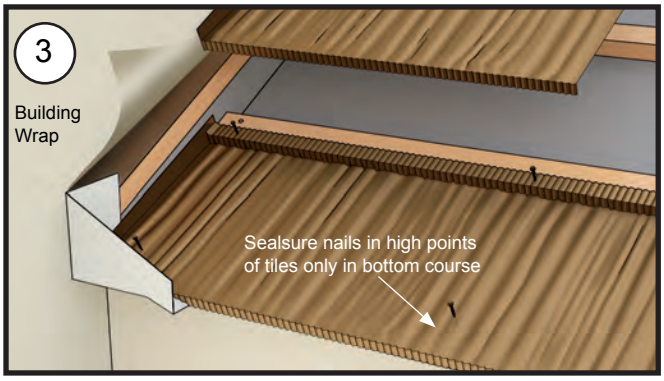

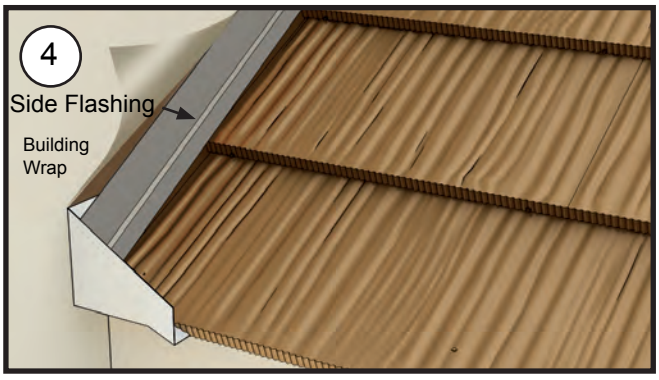

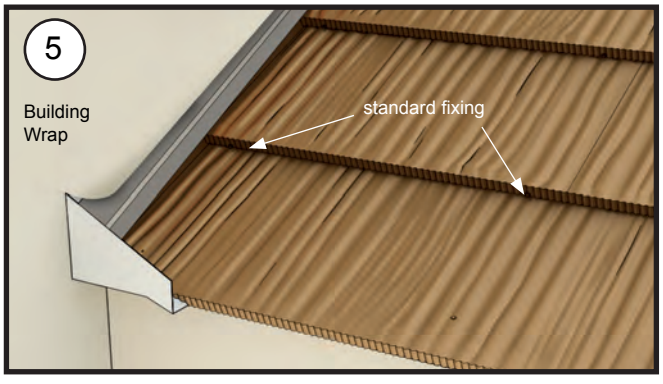

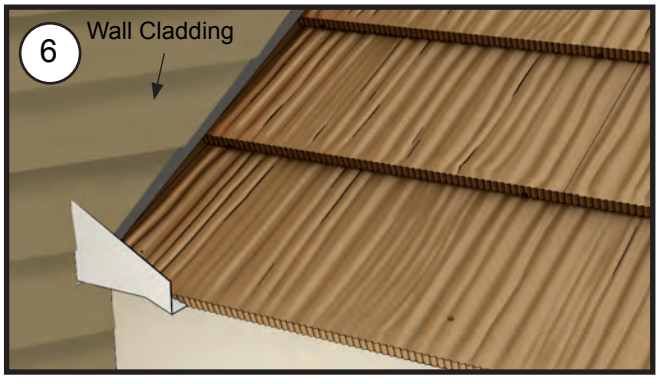

ABA20220988
APPROVED - Site Copy
Hastings District Council
20/09/2022

Sidewall Installation Continued

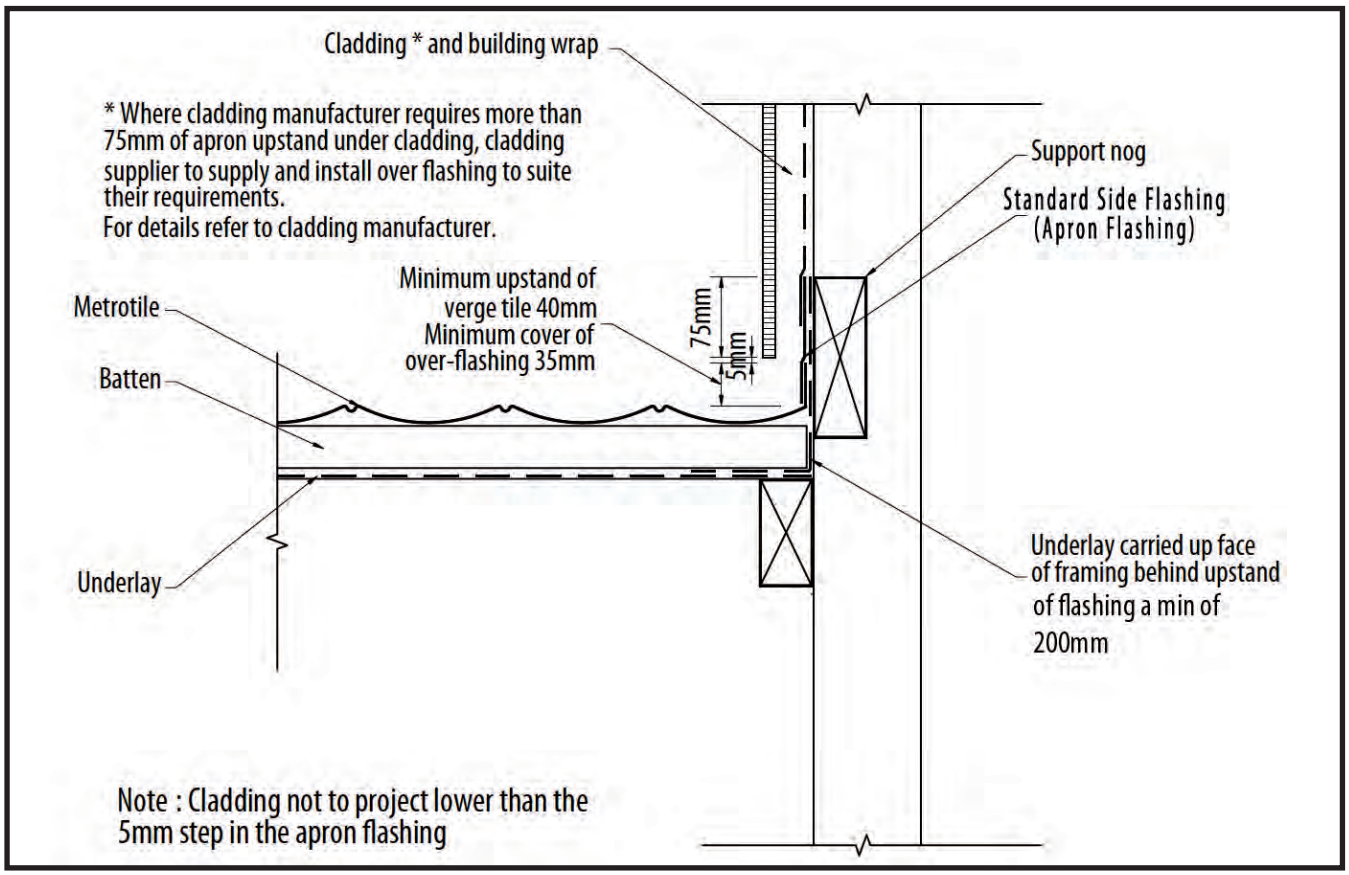

ABA20220988
APPROVED - Site Copy
Hastings District Council
20/09/2022

Headwall Installation

The wall cladding flashings must be positioned before the tiles and must be designed so that the turned up tile can be inserted behind the flashing.

Note: All preparatory work of under-flashing, fixing of eaves, gutters and valley gutters must be completed and all tiling battens must be in place before laying tiles.

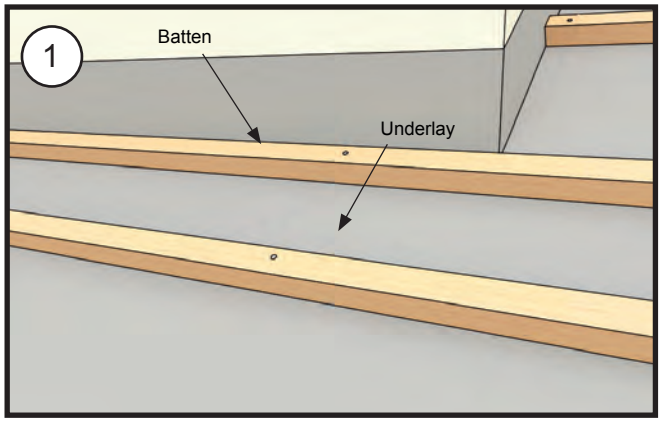

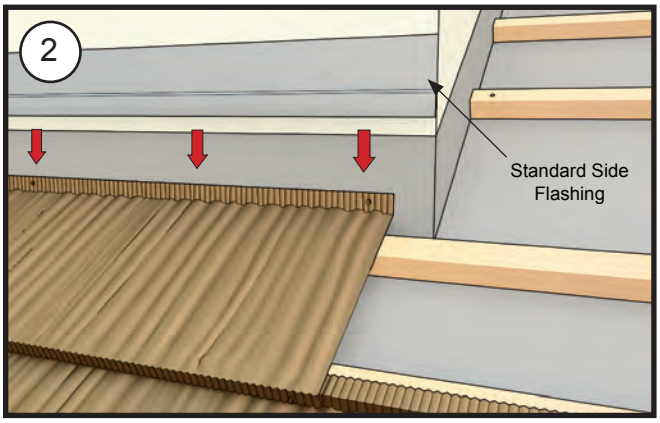

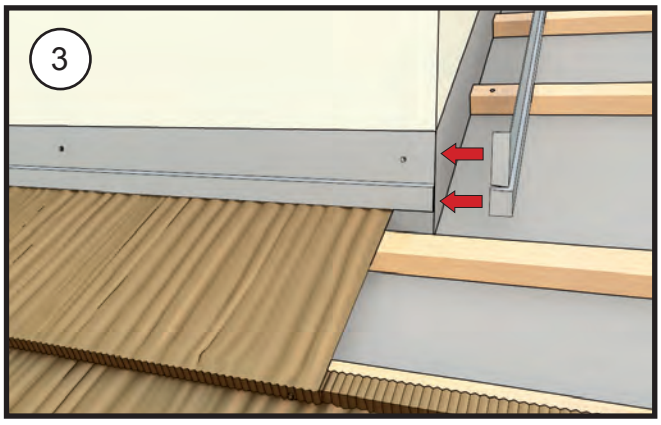

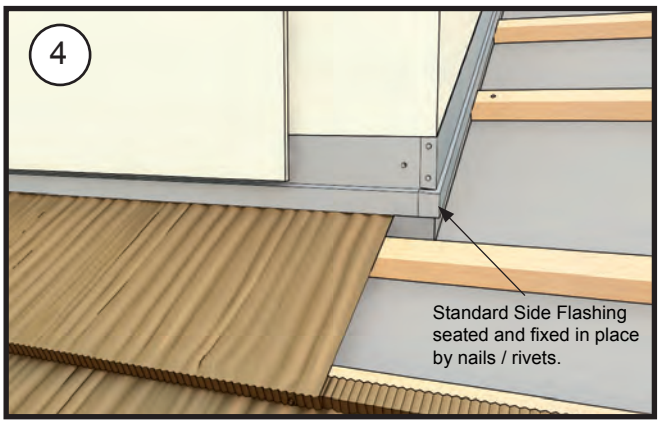

ABA20220988
APPROVED - Site Copy
Hastings District Council
20/09/2022

Headwall Installation Continued

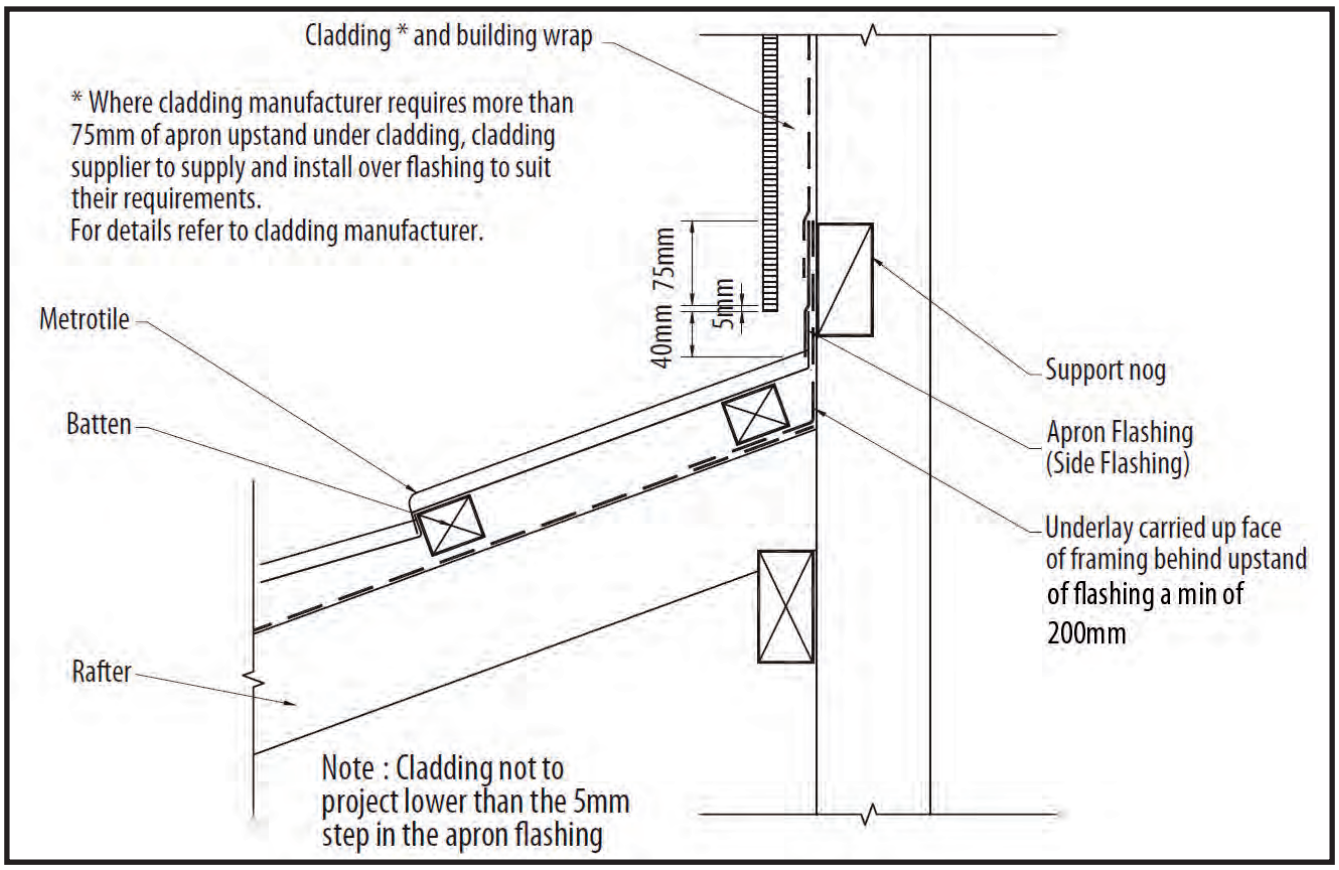

ABA20220988
APPROVED - Site Copy
Hastings District Council
20/09/2022

Penetration Installation

Roof penetrations shall be flashed as follows:

a) Pipe penetrations up to 60mm shall be flashed using an EPDM boot flashing as shown in below figure.

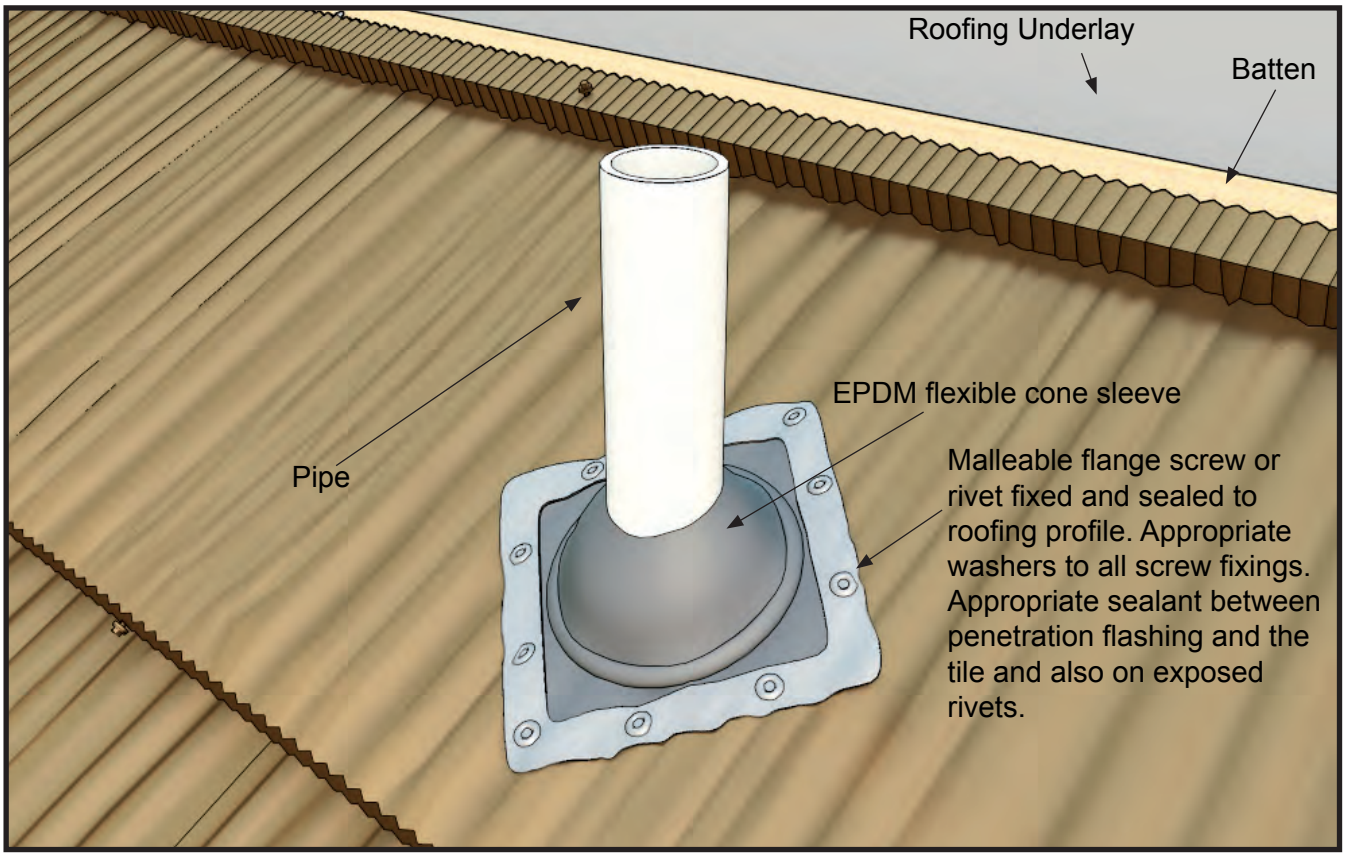

ABA20220988
APPROVED - Site Copy
Hastings District Council
20/09/2022

Metrotile
ROOFING SYSTEMS



Metrotile (NZ) Ltd
1c Inlet Road,
Takanini, Auckland, New Zealand
P: +64 9 299 9498
F: +64 9 298 4114
E: metromail@metrotile.com
W: www.metrotile.com

ABA20220988
APPROVED - Site Copy
Hastings District Council
20/09/2022

TABLE 1A - STRONGBACK LOCATION FOR WEBS @ 600MM CRS.

WIND ZONE	MAXIMUM STRONGBACK HEIGHT (h)											
	70x45 Web		90x45 Web		Double Component Gable End Webs				45x70 on flat		45x90 on flat	
					2/ 70x45		2/ 90x45					
	SG6	SG8	SG6	SG8	SG6	SG8	SG6	SG8	SG6	SG8	SG6	SG8
LOW	1750	1950	1900	2100	2200	2450	2400	2650	2350	2600	2950	3150
MEDIUM	1600	1750	1750	1900	2000	2200	2200	2400	2150	2350	2750	2950
HIGH	1400	1500	1500	1650	1750	1900	1900	2100	1800	2050	2350	2650
VERY HIGH	1250	1400	1400	1500	1600	1750	1750	1900	1600	1900	2050	2400
EXTRA HIGH	1150	1350	1300	1450	1550*	1700*	1650*	1850*	1450	1700	1850*	2200*

TABLE 1B - STRONGBACK LOCATION FOR WEBS @ 400MM CRS.

WIND ZONE	MAXIMUM STRONGBACK HEIGHT (h)											
	70x45 Web		90x45 Web		Double Component Gable End Webs				45x70 on flat		45x90 on flat	
					2/ 70x45		2/ 90x45					
	SG6	SG8	SG6	SG8	SG6	SG8	SG6	SG8	SG6	SG8	SG6	SG8
LOW	2000	2200	2200	2400	2550	2750	2750	2950	2700	2900	3250	3500
MEDIUM	1800	2000	2000	2200	2300	2550	2500	2750	2450	2700	3050	3300
HIGH	1600	1750	1750	1900	2000	2200	2200	2400	2150	2350	2750	2950
VERY HIGH	1450	1600	1600	1750	1850	2000	2000	2200	1950	2200	2500	2750
EXTRA HIGH	1400	1550	1500	1650	1750*	1950*	1900*	2100*	1800	2100	2300*	2650*

*Use these values for full height brick veneer attached to gable end.
Please note that the maximum height of brick veneer on a gable end wall is 5.5m.

SELECTION PROCESS

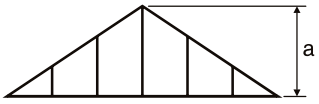

- Where (a) is less than or equal to (h) - no strongback required.

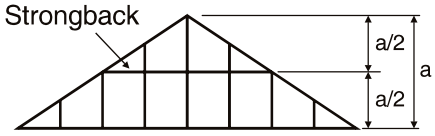

- Where (a) is greater than (h) but less than 2(h) - lower strongback is required.
- Locate the strongback at height of (a/2).

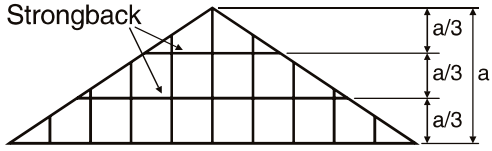

- Where (a) is greater than 2(h) but less than 3(h) - lower and upper strongbacks are required.
- Locate strongbacks at height increments of (a/3).

STRONGBACK OPTIONS

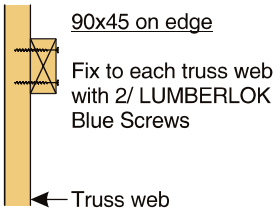

OPTION 1

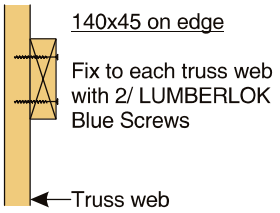

OPTION 2

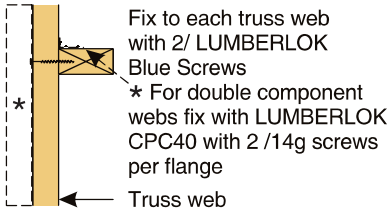

OPTION 3

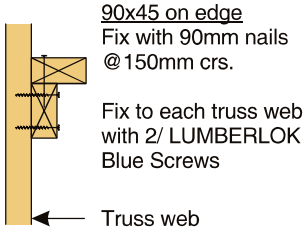

OPTION 4

TABLE 2 - STRONGBACK SPAN AND GABLE BRACE LOCATION

OPTION 1	OPTION 2	OPTION 3	OPTION 4
90x45 on edge	140x45 on edge	90x45 on flat	90x45 on flat plus 90x45 on edge
Max. span and/or gable brace location 1200mm	Max. span and/or gable brace location 1400mm	Max. span and/or gable brace location 1600mm	Max. span and/or gable brace location 2000mm

© Copyright 2017 MiTek Holdings, Inc.
All rights reserved.

1 February 2020

ABA20220988
APPROVED - Site Copy
Hastings District Council
20/09/2022

Prolam®
Engineered Laminated Timber

Visually Exposed Prolam Sealing Specifications

Visually exposed Prolam must be undercoated or sealed within 14 days of installation.

Timber naturally absorbs moisture from the surrounding environment. This can cause the product to alter dimensionally and cause resin bleeding, distortion and cracking.

Sealing the product with a good paint or stain system reduces the incidence of dimensional change and increases longevity.

When using Posts inground, the portion of the post that is to be in-ground must be sealed with a moisture-resistant coating prior to installation.

Recommended procedure

1. Fill nail holes with an exterior grade wood filler.
2. Sand back until surface is smooth and completely free from dirt and dust.
3. Painting: Apply a single enamel undercoat and then apply two full topcoats compatible with the undercoat. Painting is to be carried out in accordance with best practice: 1 x undercoat and 2 x topcoats to achieve a total DFT dry film thickness) of 80 microns, comprised of undercoat DFT 30 microns, topcoat DFT 25 microns/coat).
4. Staining: Apply 3 coats of premium oil-based stain, including cut ends and joints. CD50X or Dryden's Penetrating wood oil are some recommended oils. Recoat every 12 months.

Products must be applied as per manufacturer's instructions.

NOTE: Dark colours are not recommended. These will make the timber move more with environmental changes which may cause resin bleeding, distortion and cracking to occur. Prolam should always be painted or stained with colours with an LRV greater than 45%.

NO WARRANTY APPLIES TO ANY PRODUCT THAT HAS NOT BEEN KEPT DRY OR HAS NOT BEEN SEALED AS RECOMMENDED ABOVE.

pass™ PRODUCT ASSURANCE SUPPLIER STATEMENT
pass™ no: 19031 | Expires: 08/2021

CODEMARK BRANZ-CM-1018

ABA20220988
APPROVED - Site Copy
Hastings District Council
20/09/2022

Prolam®
Engineered Laminated Timber

PROLAM H5 POSTS



PURPOSE

Prolam H5 posts are glue laminated structural posts that are manufactured from finger jointed lamina that are individually treated to H5. They can be supported on a structural bracket above ground or cast below ground, in a concrete foundation.

EXPLANATION

Prolam H5 posts are manufactured using NZ grown Pinus Radiata. Certainty of performance is assured through CodeMark, issued by BRANZ. This CodeMark is supported through third party certification by Bureau Veritas (BV) to the relevant NZ standards. Prolam H5 posts are branded with the prefix PL.

They are supplied in:

- a range of sizes
- structural grade PL8,
- appearance grades A
- treated to hazard class H5 (CCA).

Individual treatment of the 40mm thick lamina to NZS 3640:2003 ensures that the penetration and retention of the Prolam posts, exceeds the level achieved with larger sections of solid timber. Figure 1 demonstrates that the lamination/finishing will have no effect on the penetration or retention achieved.

Where used in-ground, the post must be fully encased in concrete to ground level. This ensures that the structural performance and durability of a post is maintained.

When used in accordance with Prolam's installation, care and maintenance instructions, the Prolam H5 posts will not warp, twist or delaminate.

For further assistance please contact:

0800 832 452

info@prowoodnz.com

www.prolamnz.com

WE COMPLY s14G BUILDING ACT 2004

Figure 1: Required penetration as required by NZS3640, dark grey shows penetration.

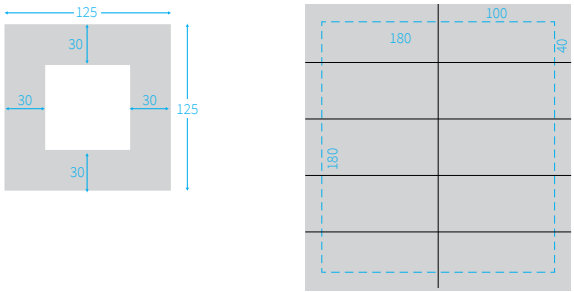

Senton Piles | Prolam H5 Post

SCOPE AND LIMITATIONS OF USE

Scope	Limitations
Building	
In accordance with NZS 3604:2011 or specifically engineered to NZS 3603:1993 and AS 1720.1:2010.	› Prolam H5 posts must not be ripped where this would result in a reduction in the number of laminae. Dimensional stability and strength rely on the width and thickness remaining unchanged. › Fixing material to be in accordance with section 4, NZS 3604:2011. › Where NZ Building Code clause C3 applies, the use of Prolam H5 posts is subject to specific design by a fire engineer.
Above and below ground applications.	› Above ground, the post must be attached to a structural bracket that will resist all applied loads. › Where installed below ground, the post must be: • sealed (in-ground portion only), • seated on a punch pad of a 100 mm, and • fully encased in concrete with a minimum 100 mm side cover.

USEFUL INFORMATION

For information on the installation and maintenance of Prolam H5 Posts and for our warranty refer to: **www.prolamnz.com/technical**.

OTHER CERTIFICATIONS AND APPROVALS HELD BY PROWOOD NZ LTD

- Bureau Veritas 'S' Mark Licence [31/07/2020]. *AS/NZS 1238.1:1998 Glue laminated structural timber.* Licence no. 2942, 2931 .
- Bureau Veritas 'S' Mark Licence [31/07/2020]. AS 5068:200 (R2016). Timber – Finger joints in structural products. Licence no. 2943, 2932.
- Bureau Veritas (BV) 'S' Mark Licence [31/07/2020]. *NZS 3640:2012 Chemical preservation of round and sawn timber.* Licence no. 2944.
- Certificate of Registration of Preservative Treatment & Allocated Brand Timber Treatment Plant Registration Authority;
  - 709 01 H5 (09/07/2020), 709 89 H5 (09/07/2020), 709 90 H5 (09/07/2020).

VERSION: V4.0

ABA20220988
APPROVED - Site Copy
Hastings District Council
20/09/2022

Prolam®
Engineered Laminated Timber

PERFORMANCE CLAIMS

If designed, installed and maintained in accordance with all the Prowood Ltd requirements, the Prolam H5 posts will comply with or contribute to compliance with the following performance claims:

NZ Building Code clauses	BASIS OF COMPLIANCE Compliance statement[1]	Demonstrated by
B1 Structure B1.3.1 B1.3.2 B1.3.3 (b, g, h, j) B1.3.4 **B2 Durability** B2.3.1(a) **F2 Hazardous Building Materials** F2.3.1	Product Certification CodeMark Certificate BRANZ-CM-1018 2/12/2019 CODEMARK BRANZ-CM-1018	› CodeMark Certificate issued by BRANZ. › BRANZ is an accredited product certification body under section 263 of the Building Act 2004.
C6 Structural Stability C6.3 C6.4	ALTERNATIVE SOLUTION NZS 3603:2011, cl 9.4.2	› NZS 3603:1993, clause 9.4.2 specifies charring rate of radiata pine and other timber species of approximately the same density to be taken as 0.65 mm/min. › APA Evaluation of Char Rate (ASTM E119), TT-118 January 2015. › Glue laminated timber elements have a fire performance comparable to solid wood members of equivalent size; Timber Industry Federation New Zealand Timber Design Guide 2007 (R 2015).

1. The Compliance Statement is the pass holder's statement that they have met their obligations under s14G(2) of the Building Act 2004.

OTHER SOURCES OF INFORMATION[2]

- APA [06/2020]. *Technical Topics: Fire Resistance of Structural Composite Lumber.* TT-118 Elevation of Char Rate. www.apawood.org/publication-search?q=tt-118 [accessed 19/08/2020].
- Timber Industry Federation, *NZ Timber Design Guide: 2007 (R2015)*. Glue Laminated Timber fire performance.

BASIS OF CERTIFICATION (CODEMARK)

Technical

- Guidance for specific engineering design using Prolam H5 Glue Laminated Posts.
- NZS 3604:2011 section 4, Steel fixings and fasteners.
- AS 3730:2006 parts 7, 8, 9 and 10 Guide to the properties of paints for buildings.
- AS/NZS 1328:1998 Glue laminated structural timber.
- AS/NZS 1170 Structural Design actions.

Quality

- BRANZ Limited. Audit of Prowood manufacturing facilities.
- BRANZ Limited. Review and audit of Prowood Quality Plan and associated manufacturing.
- Prolam Structural Timber Guide - 2019.

Buildability

- BRANZ Limited. NZ site audits.

2. Sources of information also include the Building Act 2004 and its regulations, including the Building Code (Schedule 1 of the Building Regulations 1992), Acceptable Solutions and Verification Methods, and relevant cited standards.

Scan or click this QR code for a full download of Compliance Documentation for this pass™.

www.prolamnz.com/technical/

VERSION: V4.0 **DATE:** 27/08/2020

Note: Uncontrolled in printed format.

NAME: John Woodman

POSITION: Managing Director

Signed on behalf of Prowood Ltd:

John Woodman

Digitally signed by John Woodman
Date: 2020.08.27 09:29:07 +12'00'

By signing this pass™ the signatory confirms that, in respect of the subject of this pass™, the company has met their s14G obligations under the Building Act 2004.

pass

283 Waiwhero Road, Motueka › info@prowoodnz.com › 0800 832 452 › www.prolamnz.com

This Product Assurance Supplier Statement (pass™) has been prepared by TBB in accordance with MBIE PTS guidelines and the recommendations of s9.2, Determination No. 2019-011 (issued 12 April 2019). TBB is ISO9001:2016 certified. Copyright © 2017, The Building Business Limited (TBB). All rights reserved.

ABA20220988
APPROVED - Site Copy
Hastings District Council
20/09/2022

PURLIN & BATTEN FIXING CHART

ALTERNATIVE SOLUTION TO NZS 3604:2011 TABLES 10.10 & 10.12

NOTE:

- ★ All purlin and batten sizes are as per NZS 3604:2011.
- ★ All fixings assume that the purlin and battens are installed on their flat over the top of the rafter or truss.
- ★ The minimum fixing requirements apply to all purlin locations within the roof area.
- ★ The LUMBERLOK BLUE SCREW where specified requires a minimum of 30mm penetration into rafter or truss i.e. it is suitable for rough sawn timber up to 50mm thick at 18% moisture content.

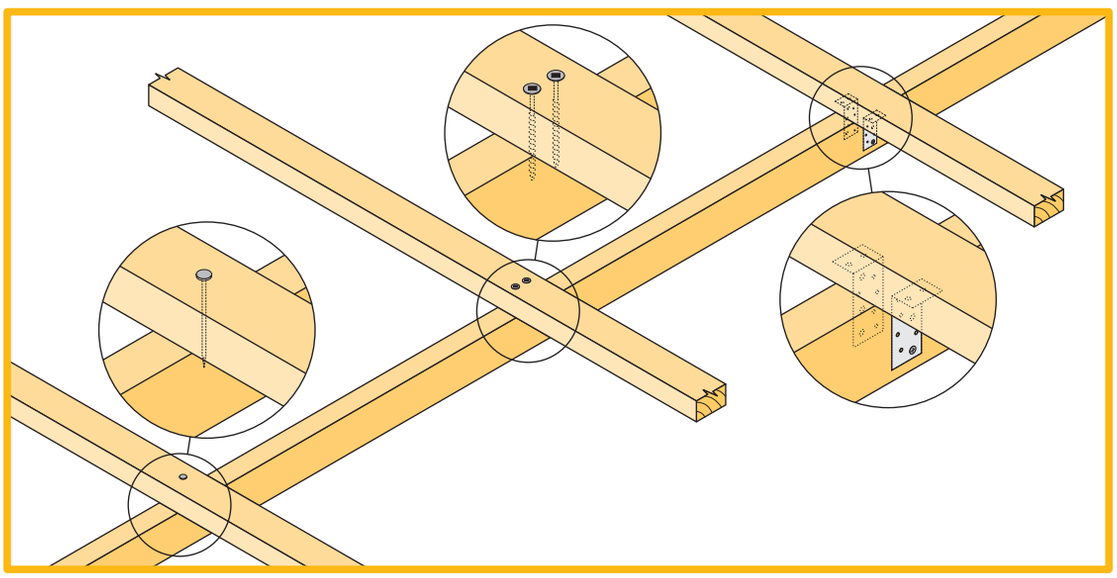

SELECTION CHART FIXING OPTIONS

(minimum fixing requirements)

ROOF WEIGHT	MAX. PURLIN SPAN (mm)	MAX. PURLIN CRS. (mm)	WIND ZONE				
			L	M	H	VH	EH
HEAVY ROOF Tile Battens	900	370	A	A	A	A	A
LIGHT ROOF Tile Battens	900	370	A	A	B	C	C
	1200	370	A	B	C	C	C
LIGHT ROOF Purlins	900	900	C	C	C	C	D
	1200	900	C	C	C	D	D
	1200	1200	C	C	D	E	E

Wind Zone:	L = Low Wind
As per NZS 3604:2011	M = Medium Wind
	H = High Wind
	VH = Very High Wind
	EH = Extra High Wind

© Copyright 2011 MiTek Holdings, Inc.
All rights reserved.

ABA20220988
APPROVED - Site Copy
Hastings District Council
20/09/2022

LUMBERLOK®

STANDARD FIXING OPTIONS

FIXING TYPE A
0.55kN

1 NAIL

Note: Two nails maybe preferred to prevent batten rolling over with high roof pitches.

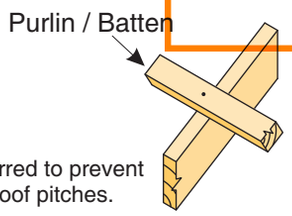

FIXING TYPE B
0.8kN

2 NAILS

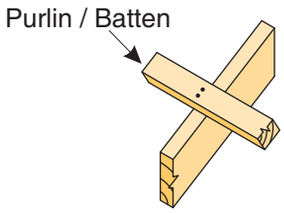

FIXING TYPE C
2.4kN

1 BLUE SCREW

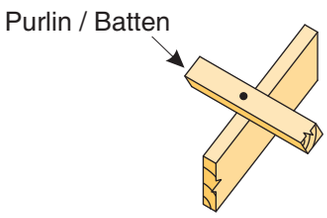

FIXING TYPE D
3.45kN

2 BLUE SCREWS
OR
2 SKEW NAILS plus 2 WIRE DOGS
(for purlin on edge)

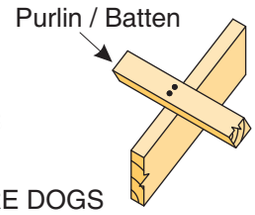

FIXING TYPE E
5.5kN

2 NAILS plus 1 CT200
OR
1 PAIR of CPC40

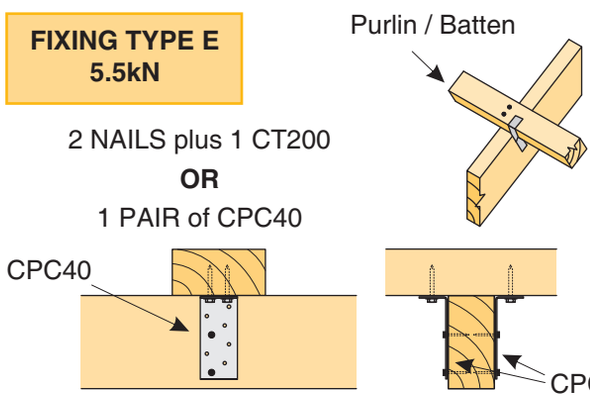

FIXING DEFINITIONS

NAIL = Either 90mm x 3.15 dia. power-driven nail or 100mm x 3.75 dia. hand-driven nail

BLUE SCREW = 80mm x 10 gauge LUMBERLOK BLUE SCREW

WIRE DOG = LUMBERLOK WIRE DOG either LH or RH

CT200 = LUMBERLOK Ceiling Tie CT200 bend over purlin, 4 x LUMBERLOK Product Nails 30mm x 3.15 dia. each end

CPC40 = LUMBERLOK CPC40 with 2 x Type 17-14g x 35mm Hex Head Screws per flange

FIXING TOLERANCES

LUMBERLOK BLUE SCREW

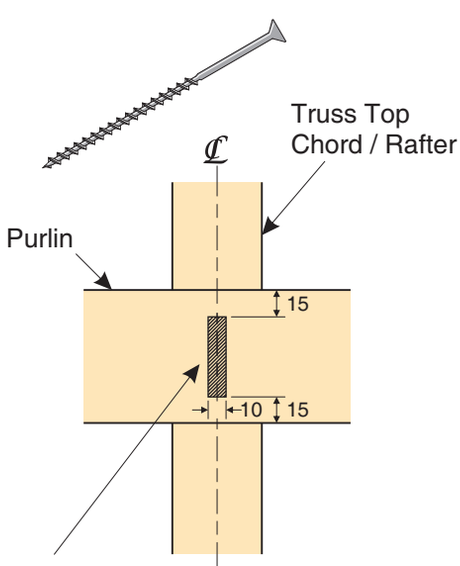

NOTE:
Locate fixings within the shaded area. Care to be taken to avoid over tightening of screws.

PURLIN / BATTEN SPLICE FIXING OPTIONS

FIXING TYPE A & B OVER PURLIN SPLICE

NOTE:
Skew nail when fixing to 35mm rafter or truss

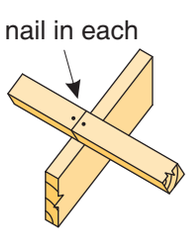

FIXING TYPE C, D or E OVER PURLIN SPLICE

90 x 35mm block fixed to chord or rafter with 4 x 75mm nails

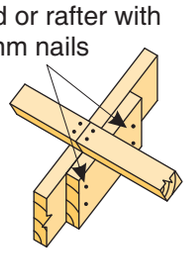

- TYPE C
  1 SCREW
  to each purlin
- TYPE D & E
  1 NAIL plus 1 SCREW to each purlin

MiTek New Zealand Limited

AUCKLAND
PO Box 58-014, Botany 2163
Phone: 09-274 7109
Fax: 09-274 7100

CHRISTCHURCH
PO Box 8387, Riccarton 8440
Phone: 03-348 8691
Fax: 03-348 0314

www.miteknz.co.nz

GANG-NAIL® LUMBERLOK® BOWMAC®

© Copyright 2011 MiTek Holdings, Inc.
All rights reserved.

ABA20220988
APPROVED - Site Copy
Hastings District Council
20/09/2022

James Hardie
a smarter way™

James Hardie®
RIGID AIR BARRIERS

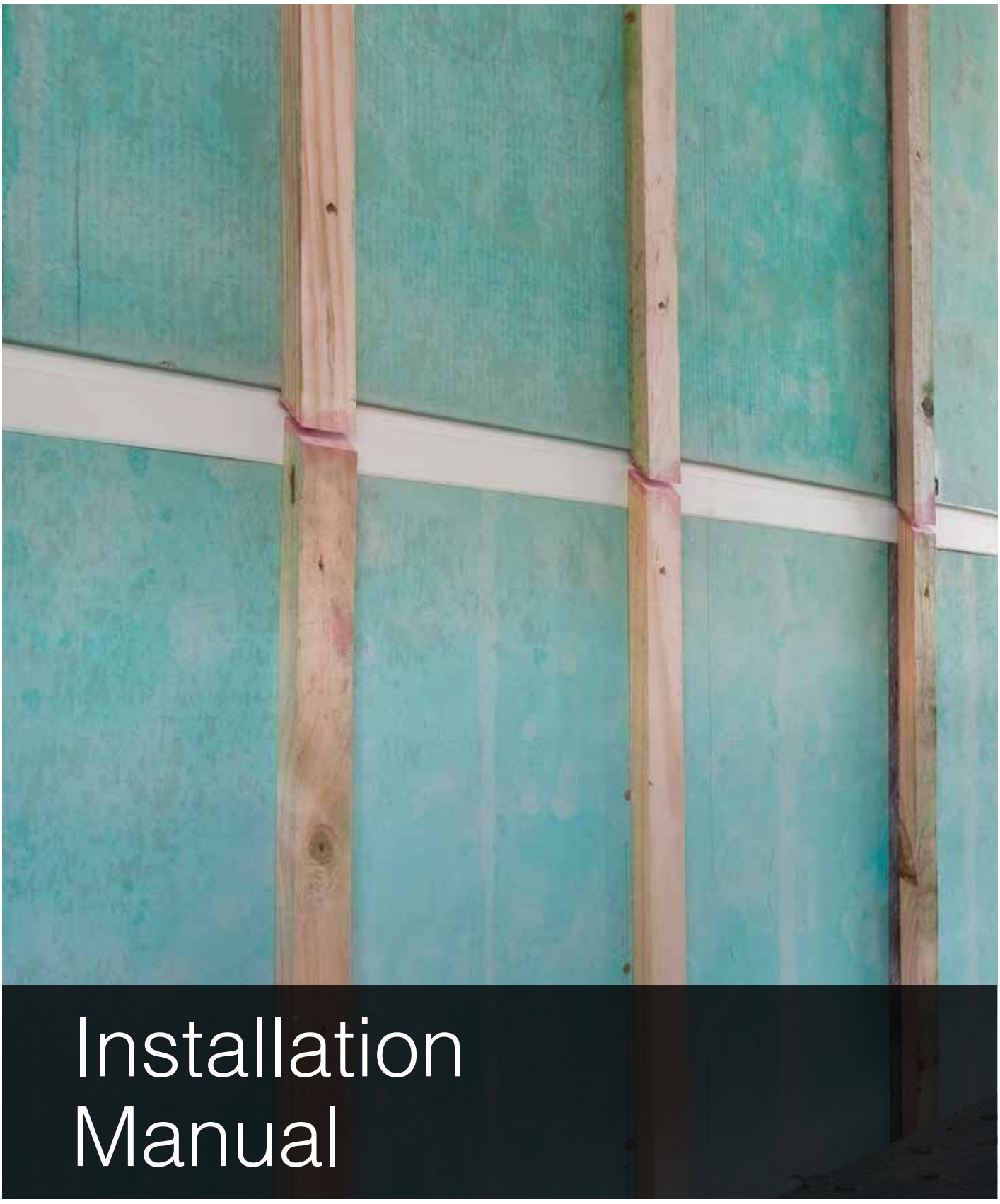

Installation Manual

APRIL 2016 | NEW ZEALAND

ABA20220988
APPROVED - Site Copy
Hastings District Council
20/09/2022

Content

1 INTRODUCTION 2

2 SAFE WORKING PRACTICES 6
- Warning 6
- Recommended Safe Working Practices 6
- Working Instructions 7
- Hole Forming 7
- Storage and Handling 7
- Quality 7

3 APPLICATIONS 8
- Study to Top Plate Fixing 8
- Temporary Weather Protection 8

4 FRAMING AND FIXINGS 9
- Framing 9
- Fixings 9
- Fastener Durability 9

5 INSTALLATION 11
- Board Layout 11
- Stud to Top Plate Fixing 18
- Surface Clearances 23
- Alpine Region 23

6 PRODUCT INFORMATION 24
- General 24
- Durability 24

7 FINISHES AND MAINTENANCE 24

PRODUCT WARRANTY 27

WE VALUE YOUR FEEDBACK

To continue with the development of our products and systems, we value your input. Please send any suggestions, including your name, contact details, and relevant sketches to:

Ask James Hardie™
Fax 0800 808 988
literaturefeedback@jameshardie.co.nz

1 Introduction

James Hardie manufactures a range of rigid air barriers such as HomeRAB® Pre-Cladding and RAB® Board.

HomeRAB Pre-Cladding is a 4.5mm thick fibre cement sheet which is sealed on the face and edges and is used as a rigid air barrier for residential buildings within the scope of NZS 3604. HomeRAB Pre-Cladding is manufactured in New Zealand by James Hardie and complies with the requirements of AS/NZS 2908.2.

It acts as temporary weather protection during construction, ideal for renovations or new construction. It is suitable for use as rigid underlay in residential buildings as per section 9.1.4 of E2/AS1 and complies with the requirements of Table 23 of E2/AS1. HomeRAB Pre-Cladding is suitable to withstand wind pressures experienced in all wind zones up to and including Very High (VH) wind zone as specified in NZS 3604. HomeRAB Pre-Cladding doesn't get fatigued or tear under the wind pressures exerted on it in the long term. HomeRAB Pre-Cladding has been tested to withstand wind pressures up to VH wind zone.

RAB Board is a 6.0mm thick fibre cement sheet which is sealed on the face and edges and is suitable for use as a rigid air barrier in Extra High Wind (EH) zones or in wind pressures up to 4.5kPa.

It complies with the requirements of Table 23 of E2/AS1.

It is suitable for use as rigid underlay as per the requirement of section 9.1.4 of E2/AS1. RAB Board is also suitable to withstand high wind pressures experienced on building facades where it creates a wind barrier which equalises pressure within the cavity to the external pressures. Flexible underlays can deteroirate caused by positive/negative pumping actions created by gusting winds within the cavity and on building facade.

Figure 1: James Hardie Rigid Air Barriers over framing

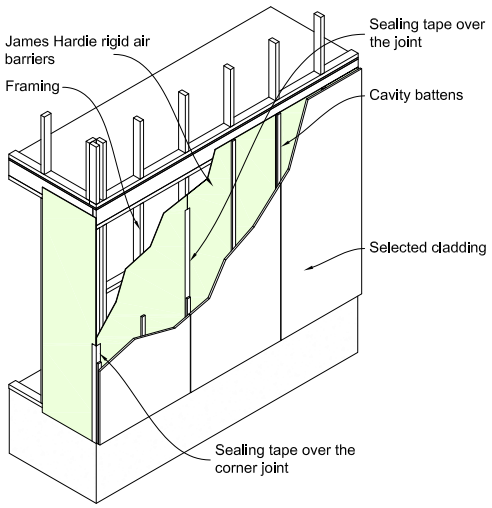

Selected Cladding Over Framing

ABA20220988
APPROVED - Site Copy
Hastings District Council
20/09/2022

Due to these pressures a building underlay may not perform as desired in the long term. RAB Board has been tested to withstand wind pressures up to 4.5kPa(ULS).

James Hardie rigid air barriers provide the following benefits:

- Resistant to moisture damage and rotting when installed correctly.
- Integral sealer applied on the face and edges repels moisture rapidly and helps resist moisture penetration.
- Provides temporary weathertightness to the building envelope until the final claddings are installed.
- Provides general rigidity to the entire structure.
- An efficient way to achieve structural bracing.

This manual covers the use of HomeRAB Pre-Cladding and RAB Board in external wall applications only. Further information relating to HomeRAB Pre-Cladding and RAB Board is also available in the following James Hardie design manuals:

- Fire and Acoustic Design Manual.
- Bracing Design Manual.

The Specifier or other responsible party for the project must ensure that the information in this manual is appropriate for the intended application and that specific design and detailing is undertaken for areas which are not covered in this manual.

Note: James Hardie rigid air barriers must not be used as external cladding.

James Hardie rigid air barriers have been tested to comply with the performance requirements of the New Zealand Building Code (NZBC).

James Hardie rigid air barriers have been BRANZ appraised. This should be read in conjunction with this installation manual. BRANZ Appraisal No. 611 (2011) can be viewed on www.jameshardie.co.nz or www.branz.co.nz.

Make sure your information is up to date

When specifying or installing James Hardie products, ensure you have the current manual. If you're not sure you do, or you need more information, visit www.jameshardie.co.nz or Ask James Hardie on 0800 808 868.

Table 1

HomeRAB Pre-Cladding

Product	Description	Quantity / Size		
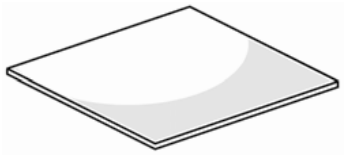	**HomeRAB Pre-Cladding** A fibre cement sheet with a green sealer applied on the face and edges. Installed with green side facing out. Approximate Mass: 6.5 kg/m^2	Thickness: 4.5mm		
		Length (mm)	Width (mm)	Code
		2450	1200	**404766**
		2750	1200	**404768**

RAB Board

Product	Description	Quantity / Size		
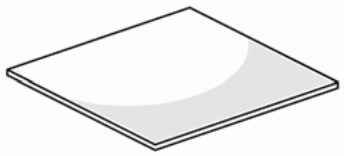	**RAB Board** A fibre cement sheet with a green sealer applied on the face and edges. Installed with green side facing out. Approximate Mass: 8.6 kg/m^2	Thickness: 6.0mm		
		Length (mm)	Width (mm)	Code
		2450	1200	**402980**
		3000	1200	**402981**

NOTE:

All dimensions and masses provided are approximate only and are subject to manufacturing tolerances. Masses are based on Equilibrium Moisture Content (EMC) of product.

ABA20220988
APPROVED - Site Copy
Hastings District Council
20/09/2022

Table 2

Accessories/Tools

Components Supplied by James Hardie

	**HardieBlade™ Saw Blade** 185mm diameter, Poly diamond blade for fast, clean cutting of James Hardie fibre cement. **CODE: 300660**		**Inseal® 3259 Tape 50mm wide** A sealing strip for vertical joints 50m roll. **CODE: 300767**
	**RAB uPVC Horizontal Flashing** 3000mm long for RAB Board horizontal joints **CODE: 305152**		**Inseal® 3259 Tape 80mm wide** A sealing strip for corner joints 50m roll. **CODE: 300769**
	**HomeRAB 4.5 Horizontal Flashing** 3000mm long for horizontal joints **CODE: 305798**		

Table 3

COMPONENTS NOT SUPPLIED BY JAMES HARDIE

James Hardie recommends the following products for use in conjunction with its James Hardie rigid air barriers. James Hardie does not manufacture these products and does not provide a warranty for their use. Please contact component manufacturer for information on their warranties and further information on their products.

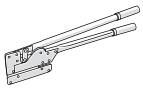	**Hand Guillotine** Guillotine for cutting fibre cement.		**Sealing Tape/Window Flashing Tape** Tape used to seal vertical joints and flash around window, door and pipe penetrations. **SUPER-STICK Building Tape®** **- Marshall Innovations** **0800 776 9727** **3M™ All Weather Flashing Tape 8067** **3M™ 0800 474 787**
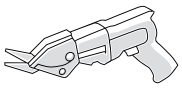	**Electric Shear / Fibreshear**		
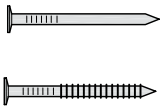	**Fibre Cement Nails** 40 x 2.8mm hot dipped galvanised HardieFlex™ nails as per Table 4. 40 x 2.8mm stainless steel HardieFlex™ nails as per Table 4.		**Scoring Knife** For easy score and snap cutting of fibre cement sheets.
 	**Nail Gun and Nails** Suitable pneumatic or coil gun nailer with: • 50 x 2.8mm galvanised / stainless steel round head gun nails or minimum length and gauge required for specific application. • 60 x 2.8mm galvanised / stainless steel round head gun nails or minimum length and gauge required for site specific application.		

ABA20220988
APPROVED - Site Copy
Hastings District Council
28/09/2022

Figure 2: James Hardie Rigid Air Barriers with Linea Weatherboard

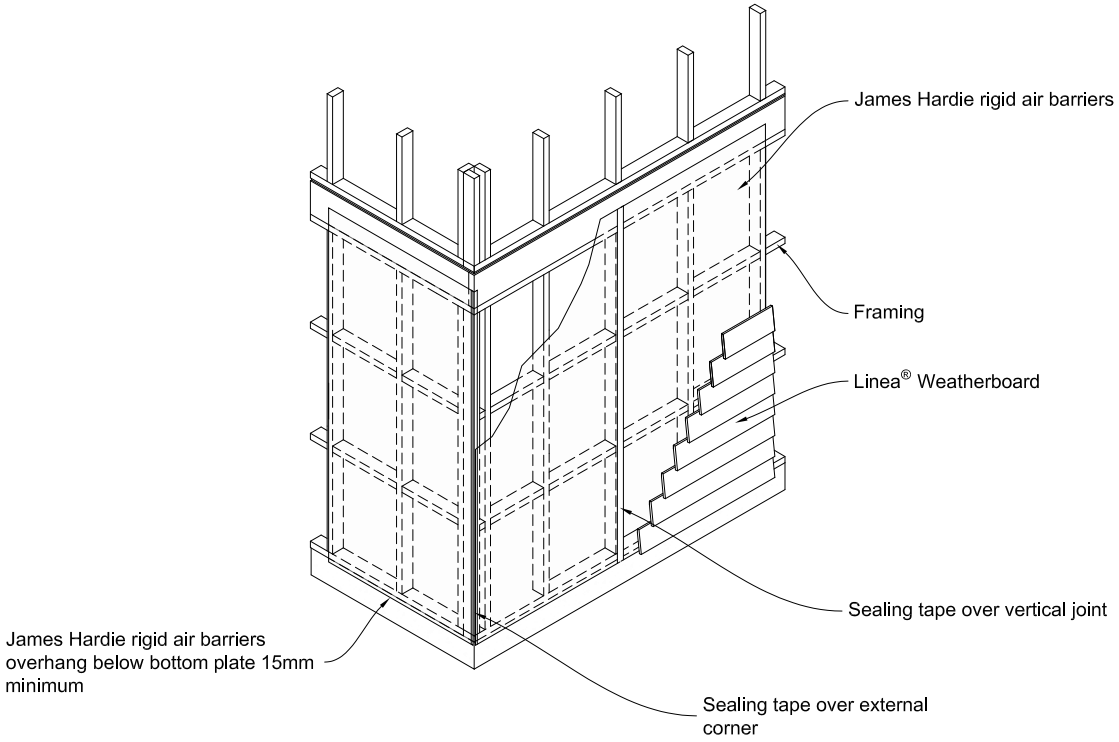

Figure 3: James Hardie Rigid Air Barriers with Brick/Block Cladding

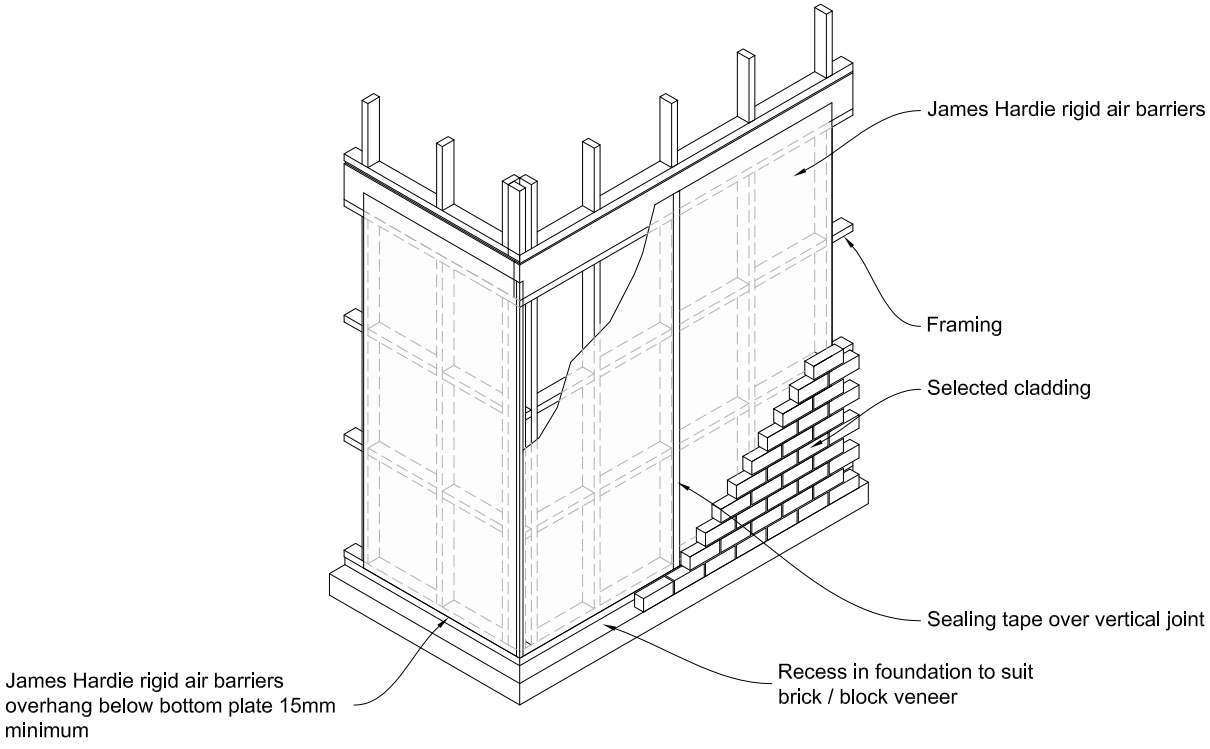

ABA20220988
APPROVED - Site Copy
Hastings District Council
20/09/2022

2 Safe working practices

WARNING — DO NOT BREATHE DUST AND CUT ONLY IN WELL VENTILATED AREA

James Hardie products contain sand, a source of respirable crystalline silica which is considered by some international authorities to be a cause of cancer from some occupational sources. Breathing excessive amounts of respirable silica dust can also cause a disabling and potentially fatal lung disease called silicosis, and has been linked with other diseases. Some studies suggest smoking may increase these risks. During installation or handling: (1) work in outdoor areas with ample ventilation; (2) minimise dust when cutting by using either 'Score and Snap' knife, fibre cement shears or, where not feasible, use a HardieBlade™ Saw Blade and dust-reducing circular saw attached to a HEPA vacuum; (3) warn others in the immediate area to avoid breathing dust; (4) wear a properly-fitted, approved dust mask or respirator (e.g P1 or P2) in accordance with applicable government regulations and manufacturer instructions to further limit respirable silica exposures. During clean-up, use HEPA vacuums or wet cleanup methods — never dry sweep. For further information, refer to our installation instructions and Safety Data Sheets available at www.jameshardie.co.nz.

FAILURE TO ADHERE TO OUR WARNINGS, SAFETY DATA SHEETS, AND INSTALLATION INSTRUCTION MAY LEAD TO SERIOUS PERSONAL INJURY OR DEATH.

James Hardie recommended safe working practices

CUTTING OUTDOORS

Position cutting station so that wind will blow dust away from user or others in working area. Use one of the following methods based on the required cutting rate:

BEST
- Score and snap
- Hand guillotine
- Fibreshear

BETTER
- Dust reducing circular saw equipped with HardieBlade™ Saw Blade and HEPA vacuum extraction.

GOOD
- Dust reducing circular saw equipped with HardieBlade™ Saw Blade

CUTTING INDOORS

- Cut only using score and snap, hand guillotine or fibreshears (manual, electric or pneumatic).
- Position cutting station in well-ventilated area

DRILLING/OTHER MACHINING

When drilling or machining you should always wear a P1 or P2 dust mask and warn others in the immediate area.

IMPORTANT NOTES:

1. For maximum protection (lowest respirable dust production), James Hardie recommends always using "Best" — level cutting methods where feasible
2. NEVER use a power saw indoors
3. NEVER use a circular saw blade that does not carry the HardieBlade™ logo
4. NEVER dry sweep — Use wet suppression or HEPA Vacuum
5. NEVER use grinders
6. Always follow tool manufacturer's safety recommendations

P1 or P2 respirators can be used in conjunction with above cutting practices to further reduce dust exposures. Additional exposure information is available at www.jameshardie.co.nz to help you determine the most appropriate cutting method for your job requirements. If concern still exists about exposure levels or you do not comply with the above practices, you should always consult a qualified industrial hygienist or contact James Hardie for further information.

ABA20220988
APPROVED - Site Copy
Hastings District Council
20/09/2022

Working instructions

Refer to Recommended Safe Working Practices before starting any cutting or machining of product.

Score and Snap

Score and Snap is a fast and efficient method of cutting the product using special tungsten tipped Score and Snap knife.

Preferably score on the face side of the product. Score against a straight edge and repeat the action to obtain adequate depth for clean break — normally 1/3 of sheet thickness. Snap upwards to achieve break. Smooth any rough edges with a rasp.

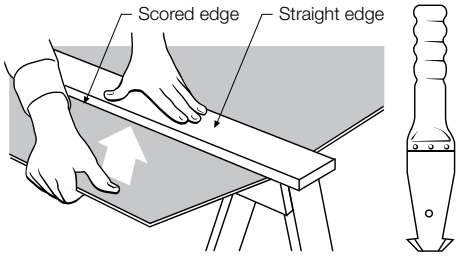

Hand guillotine

Make guillotine cut on the off-cut side of line to allow for the thickness of the blade.

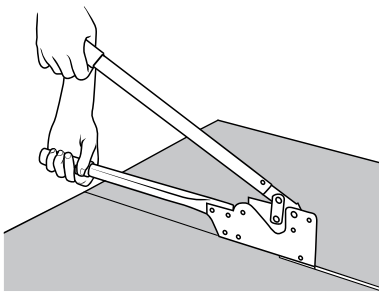

Fibreshear heavy duty

An electrically powered, fast, clean and effortless way of cutting James Hardie building products, especially around curves such as archways. Make Fibreshear cut on the “off-cut” side of the line to allow for the thickness of the shear.

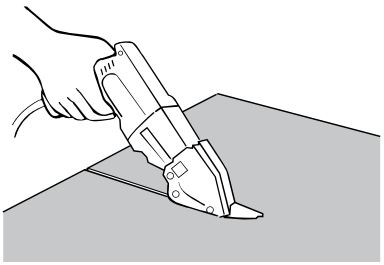

HardieBlade™ Saw Blade

The HardieBlade™ Saw Blade used with a dust-reducing saw fitted with HEPA vacuum filter is ideal for fast, clean cutting of James Hardie fibre cement products. A dust-reducing saw uses a dust deflector or a dust collector connected to a vacuum system. When sawing, clamp a straight-edge to the sheet as a guide and run the saw base plate along the straight edge when making the cut.

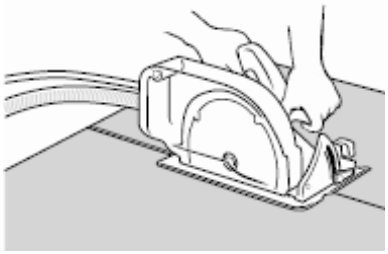

Hole-forming

For smooth clean cut circular holes:

- Mark the centre of the hole on the sheet.
- Pre-drill a ‘pilot’ hole.
- Using the pilot hole as a guide, cut the hole to the appropriate diameter with a hole saw fitted to a heavy duty electric drill.

For irregular holes:

- Small rectangular or circular holes can be cut by drilling a series of small holes around the perimeter of the hole then tapping out the waste piece from the sheet face.
- Tap carefully to avoid damage to sheets, ensuring that the sheet edges are properly supported.

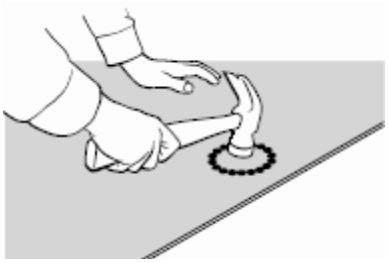

Storage and handling

To avoid damage, all James Hardie building products should be stored with edges and corners of the sheets protected from chipping.

James Hardie building products must be installed in a dry state and protected from weather during transport and storage. The product must be laid flat under cover on a smooth level surface clear of the ground to avoid exposure to water, moisture, etc.

Quality

James Hardie conducts quality checks to ensure any product manufactured falls within our quality spectrum. It is the responsibility of the builder to ensure the product meets aesthetic requirements before installation. James Hardie will not be responsible for rectifying obvious aesthetic surface variations following installation.

ABA20220988
APPROVED - Site Copy
Hastings District Council
20/09/2022

3 Applications

HomeRAB Pre-Cladding is suitable for use as a rigid air barrier for residential buildings up to and including VH wind zone within the scope of NZS 3604 and E2/AS1. HomeRAB Pre-Cladding is fixed directly to the framing. The vertical joints are sealed over the face of the HomeRAB Pre-Cladding. HomeRAB Pre-Cladding is suitable for use behind all James Hardie claddings or alternative claddings such as brick, timber weatherboard, EIFS etc.

The **RAB Board** is suitable for use as a rigid air barrier in EH wind zone in residential or SED project applications to withstand high wind pressures in conjunction with cladding/commercial facades. In these applications, RAB Board is fixed directly to the framing. The vertical joints are sealed over the face of the RAB Board using joint flashing tape.

JAMES HARDIE RIGID AIR BARRIER

James Hardie rigid air barriers can remain exposed to the external elements for maximum 90 days prior to the external cladding being installed.

The James Hardie rigid air barriers can be used as a backing board behind stucco plasters. Refer to James Hardie Stucco Solution technical specification, E2/AS1 'External Moisture' clause of the NZBC and BRANZ 'Weathertight Solutions Stucco' for further information on stucco plaster. The RAB Board can also be used as a backing board behind other proprietary claddings which comply with the NZBC requirements. Proprietary cladding must be installed as per their manufacturing specifications. In these applications, a building underlay must be used as a slip layer to cover RAB Board and ensure a separation between mortars and RAB Board. The RAB Board is fixed over a minimum 18mm thick cavity batten for these applications. The RAB Board may also be required over the framing to withstand high wind pressures within the cavity.

The claddings/facades used over James Hardie rigid air barriers must satisfy the various performance requirements of the NZBC.

Horizontal profiled metal and uPVC claddings must not be direct fixed over James Hardie rigid air barriers. These must be fixed over an underlay or overlay the James Hardie rigid air barrier using the cavity construction method.

Vertical profiled metal cladding can be direct fixed over James Hardie rigid air barriers with a flexible building underlay separator over to comply with manufacturers recommendations.

The cladding fastener length must be increased by 5mm minimum to maintain the required nail pull out strength.

In case of gable end trusses sitting on top plates of external wall frame, the frame size must comply with the minimum timber sizes stipuated for wall frames in Section 8 of the NZS 3604.

Bracing

For bracing application the James Hardie rigid air barriers must be installed as per HomeRAB Pre-Cladding/RAB Board bracing details in the James Hardie Bracing Design Manual. Bracing with HomeRAB Pre-Cladding can only be achieved for direct fix construction. Bracing can be achieved for both construction methods i.e. direct fixed and cavity construction using RAB Board. The board must be fixed with 40 x 2.8mm HardieFlex nails at 150mm c/c to all framing. For further information on bracing refer to James Hardie Bracing Design Manual or Ask James Hardie on 0800 808 868.

Fire Rated Wall Construction

RAB Board is classified as 'Non-Combustible Material'. For fire rated wall applications RAB Board must be installed as per the current James Hardie Fire and Acoustic Design Manual. RAB Board is suitable to achieve fire ratings up to 60 minutes when installed in accordance with fire systems specifications published in James Hardie Fire and Acoustic Design Manual. The board must be fixed with 40 x 2.8mm HardieFlex nails at 150mm c/c to all framing.

TEMPORARY WEATHER PROTECTION

Installation of internal lining can be started after James Hardie rigid air barriers have been installed on the exterior of the building envelope. In order to achieve this, all sheet joints and penetrations must be sealed and the roof, soffit lining, windows/doors (including head flashings and airseals) must have been installed to ensure the building is weathertight before starting the installation of internal linings. The insulation, electrical cables, plumbing and any other services required in external walls must be installed and inspected by the building consent authority before starting the installation of internal linings. The internal lining and services must be installed in accordance with their manufacturer's product literature and comply with the NZBC requirements.

The claddings must be installed within 90 days after the installation of James Hardie rigid air barriers.

STUD TO TOP PLATE FIXING

Alternative stud to top plate connection refer to Figure 15.

ABA20220988
APPROVED - Site Copy
Hastings District Council
20/09/2022

4 Framing and fixings

FRAMING

The timber framing must be in accordance with the current relevant standards or comply with the specific engineering design requirements. The timber treatment and moisture content must comply with NZBC Acceptable Solution B2/AS1 requirements. Framing must satisfy the requirements of B1 and B2 clauses of the NZBC.

The minimum framing size required for fixing James Hardie rigid air barriers is 90 x 45mm. Studs must be provided as per Table 4. Ensure that the framing is suitable for installing the selected cladding. Refer to cladding installation manual for further information about the framing requirements.

For specific engineering design projects where the timber framing differs from whats been provided in this manual, Ask James Hardie on 0800 808 868.

FIXINGS

James Hardie rigid air barriers must be installed with its sealed face towards the external cladding and unsealed face towards the framing. The sealer applied on the face helps the board to drain the moisture freely over the face and keeps it dry.

- Nails must finish flush with board surface.

The **HomeRAB Pre-Cladding and RAB Board** is fixed as described below.

HomeRAB Pre-Cladding and RAB Board can either be gun nailed or hand nailed. It is recommended to use gun nails to cut down installation time. When gun nailing, follow nail gun manufacturer's instructions for correct operation of tool and site safety requirements.

- Nails must have a minimum clearance of 12mm from the sheet edges and a minimum of 50mm horizontally and 75mm vertically from the sheet corners.
- When using a nail gun use 50 x 2.8mm round head gun nails. The gun nails used must have a full round head to provide the required holding power.

  NOTE: Do not use D Head nails. Do not use gun nailing for bracing applications.
- When fixing for bracing applications, follow the bracing details for installation provided in James Hardie Bracing Design Manual.
- When using as a backing board over a cavity batten for stucco plasters or proprietary claddings, fix using 60 x 3.15mm HardieFlex nails at 200mm c/c at board edges and intermediate framing.
- When RAB Board is used for a fire rating system, the board must be fixed with HardieFlex nails at 150mm c/c at board edges and intermediate framing.

NOTE: HomeRAB Pre-Cladding must not be used in EH wind zones. Use RAB Board instead.

Table 4

Fixings			
Wind pressures	**Stud centres max**	**Type of nail**	**Nailing centres to all framing**
HomeRAB Pre-Cladding / RAB Board			
Up to VH wind zone	600mm	40 x 2.8mm HardieFlex nail	200mm
RAB Board			
Above 1.5kPa to 4.5kPa (EH wind zone and SED project)	400mm	40 x 2.8mm HardieFlex nail	200mm

FASTENER DURABILITY

Fasteners must have the appropriate level of durability required for the intended project to comply with the NZBC. This is of particular importance in coastal areas, areas subject to salt spray and other corrosive environments. The following table provides the information regarding the types of nails to use to comply with the durability requirements of the NZBC.

Table 5

Exposure conditions and nail selection prescribed by NZS 3604			
ZONE:	D Zone*	Zone C outside sea spray zone and Zone B and Geothermal hot spots	Bracing — outside sea spray
NAIL MATERIAL:	Grade 316 Stainless steel	Hot-dipped galvanised** or grade 316 stainless	Hot-dipped galvanised**

*Zone C areas where local knowledge dictates that increased durability is required are to be classified as sea spray zones. Also where the cladding is expected to meet 50 year durability, HomeRAB Pre-Cladding/RAB Board must be fixed with stainless steel nails.

** Hot dip galvanised must comply with AS/NZS 4680

Check with the local Territorial Authority if unsure. Refer to fixing manufacturer for warranty and fixing installation guidance.

Fasteners must be fully compatible with all other materials that they are in contact with to ensure the durability and integrity of the assembly. Contact fastener manufacturers for more information. Also refer to Table 20 and 21 of E2/AS1 for further information about the suitable fastening materials and their compatibility with other materials.

Galvanised nails can be used for bracing when in non coastal zones.

ABA20220988
APPROVED - Site Copy
Hastings District Council
20/09/2022

Figure 4: James Hardie Rigid Air Barriers layout

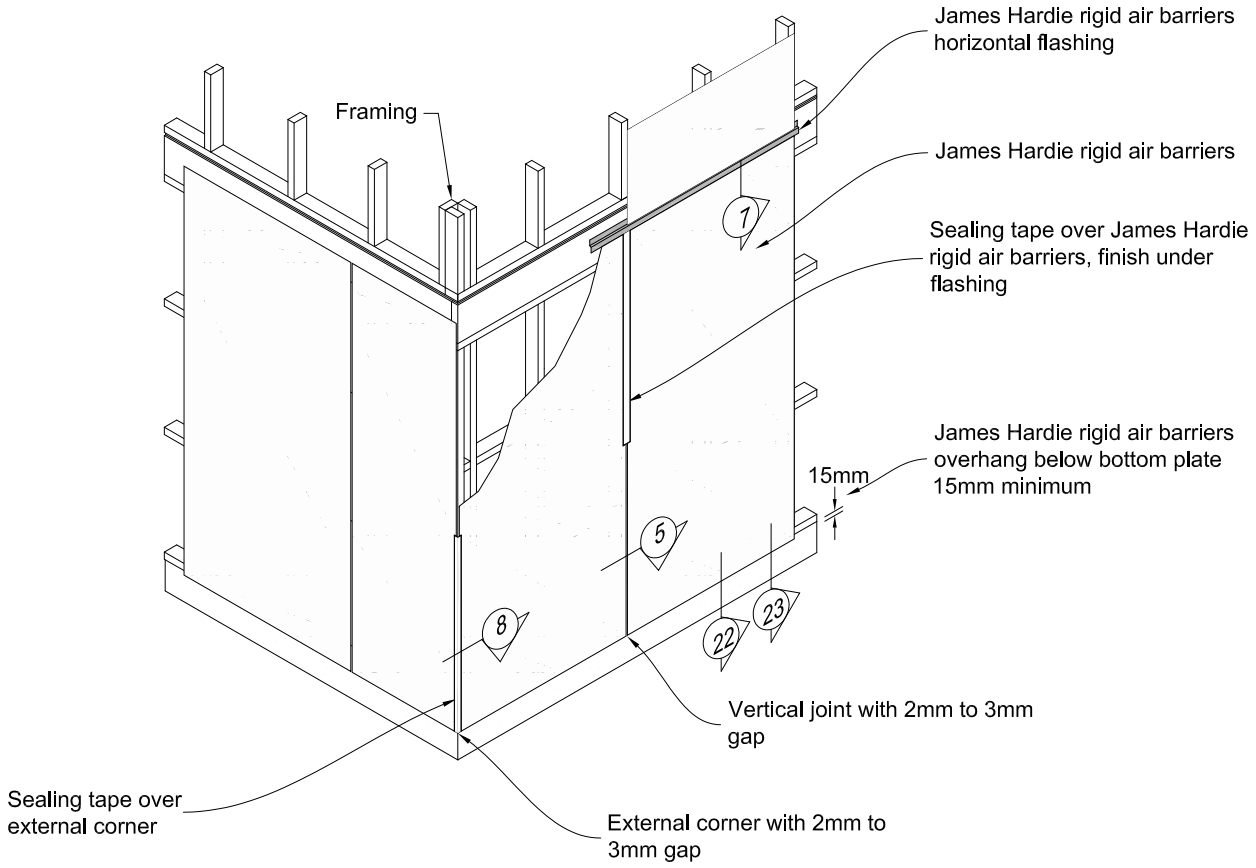

ABA20220988
APPROVED - Site Copy
Hastings District Council
20/09/2022

5 Installation

BOARD LAYOUT

When using James Hardie rigid air barrier, building underlays are not required over the framing. HomeRAB Pre-Cladding/ RAB Board has been tested and complies with the performance requirements of Table 23 of Clause E2 of the NZBC. The sheets are jointed keeping a gap of 2-3mm maximum between the sheet edges. The board must be cleaned of any dust before fixing the jointing tape over the joint.

Cut edges where exposed must be primed prior to installation with Dulux® Primacryl, Resene Quick Dry or similar.

The bottom edge of James Hardie rigid air barriers must overhang below the bottom plate by 15mm minimum. Refer Figures 21 and 22.

Vertical Joints

Vertical joints must be sealed to stop the moisture ingress into the framing behind James Hardie rigid air barrier. The vertical joints are sealed over by running a 75mm wide sealing tape e.g. SUPER-STICK Building Tape / 3M All Weather Flashing Tape 8067.

A 50mm wide Inseal 3259 sealing tape can also be used where the CLD Structural Cavity Batten or timber cavity battens are fixed over the joint. The Inseal tape gets compressed permanently under the cavity battens to seal the joint.

Inseal tapes must not be left exposed. Battens must be installed within 24 hours of the Inseal tape installation for the compression to happen. White protective tape must be removed before batten installation.

The sealing tapes must be pressed hard over the James Hardie rigid air barriers surface while fixing so that they achieve the required bond. The sealing tapes must not be exposed to elements for more than 90 days. This achieves the required protection when the cladding is installed. The claddings must be installed within 90 days.

NOTE: Refer to sealing tape manufacturers recommendations regarding the installation of their sealing tapes in cold climate conditions. It is recommended to warm up the sealing tapes eg when the air and substrate temperatures are below 10°C. Check with tape manufacturer for their recommendations

Horizontal Joints

The horizontal joint of James Hardie rigid air barriers must be flashed using a uPVC horizontal flashing or alternatively aluminium or colour steel Z flashings can also be used. Refer Figure 7. Leave a gap of minimum 15mm at the solid timber floor joist or as specified by the project engineer. The flashing must be lapped by a minimum 35mm on both sides of the joint.

For walls longer than 3m, horizontal uPVC flashing must be lapped by 50mm minimum and silicone sealed.

Rigid air barriers must not be fixed into floor joists.

Figure 5: Vertical joint

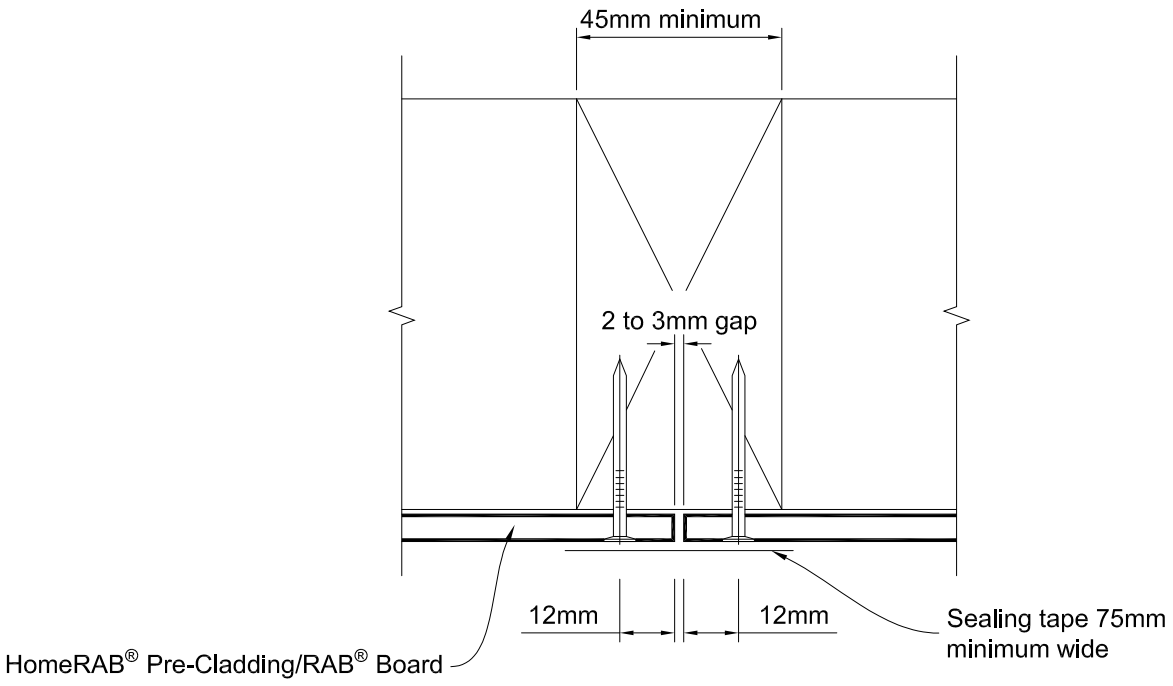

ABA20220988
APPROVED - Site Copy
Hastings District Council
20/09/2022

Internal/External Corners

James Hardie rigid air barrier corner joints must be sealed using a 75mm minimum wide sealing tape. A 80mm wide Inseal 3259 sealing tape can also be used where the cavity battens are fixed over the corner joint to compress the Inseal tape.

When using a uPVC horizontal flashing in horizontal joints, the internal and external corner flashing joints must be sealed using a 75mm minimum wide joint sealing tape. Refer Figure 10.

When using James Hardie rigid air barrier as a backing board for stucco plaster, the vertical joints of James Hardie rigid air barrier are not required to be sealed using flashing tapes. The horizontal joints at floor level and in tall walls must be flashed to satisfy the requirements of clause E2 of the NZBC.

Figure 6: Horizontal joint flashing

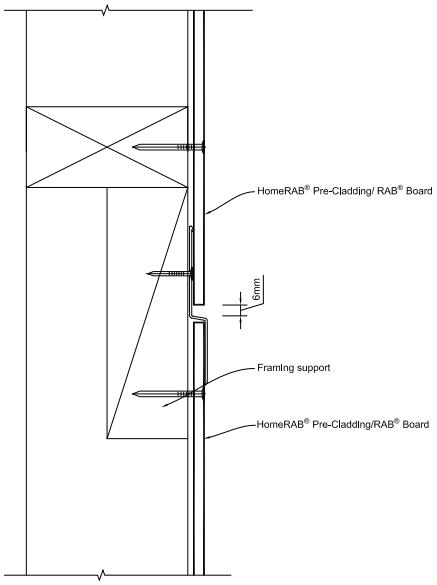

Figure 7: Horizontal joint

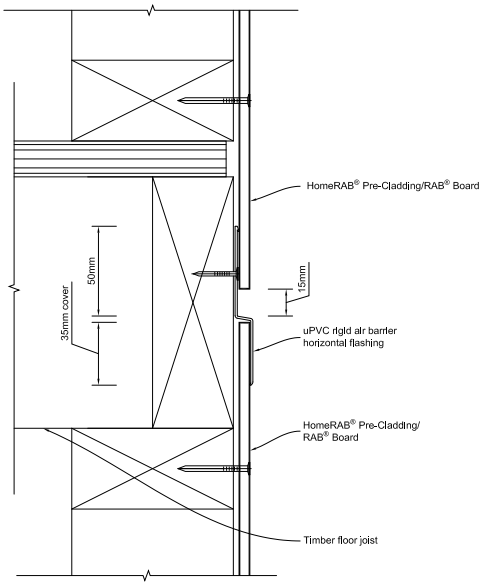

Figure 8: External corner joint

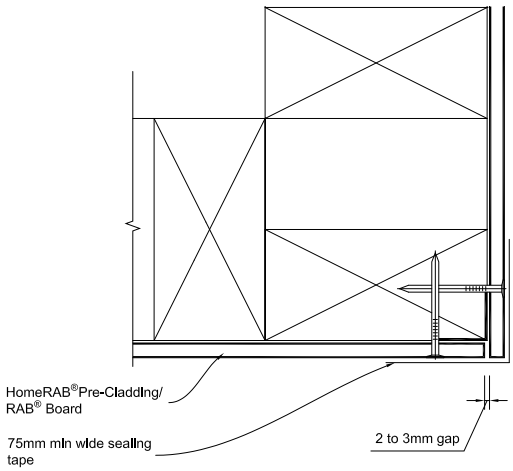

Figure 9: Internal corner joint

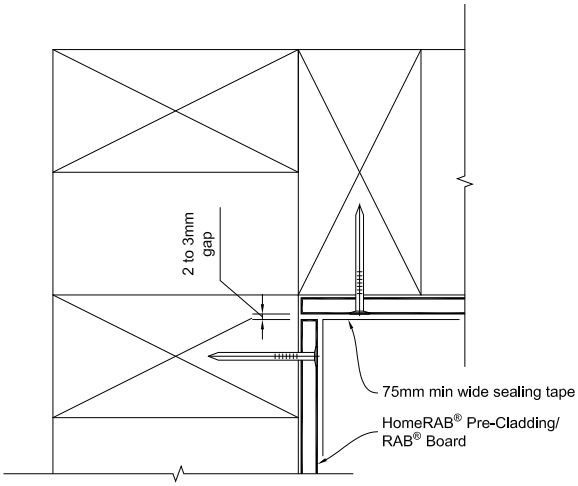

ABA20220988
APPROVED - Site Copy
Hastings District Council
20/09/2022

Figure 10a: Corner junction to horizontal joint

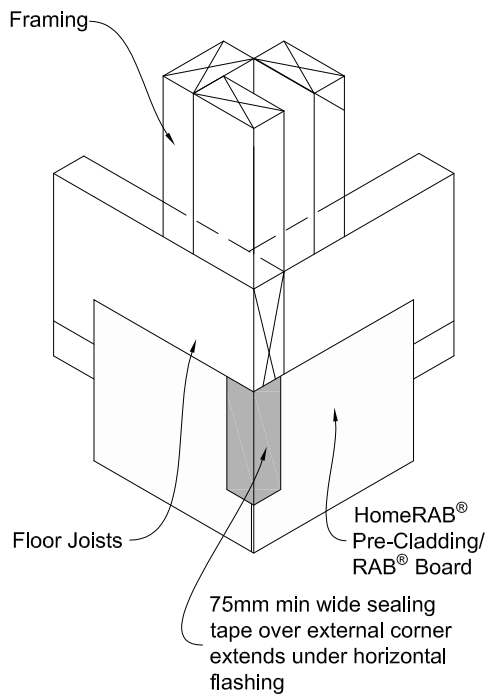

Figure 10b: Corner junction to horizontal joint

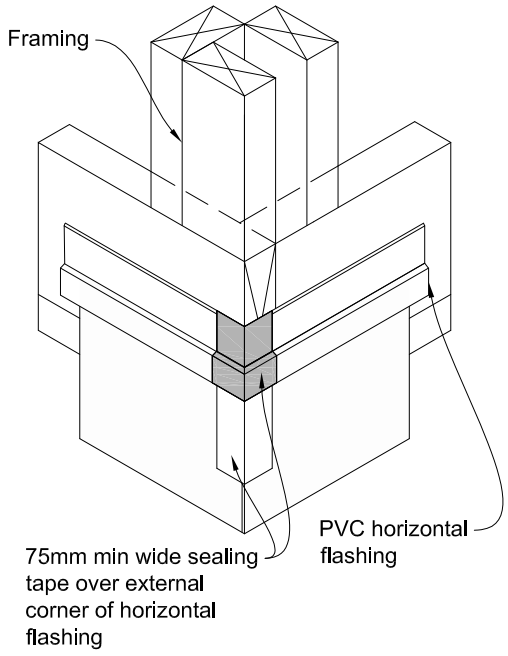

Figure 10c: Corner junction to horizontal joint

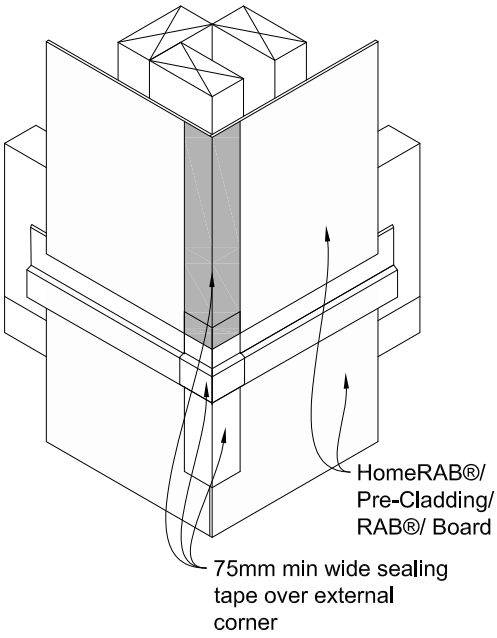

ABA20220988
APPROVED - Site Copy
Hastings District Council
20/09/2022

Flexible Underlay

James Hardie rigid air barriers can also be used in conjunction with flexible underlay in accordance with Section 9.1.7.2 of E2/AS1. When installing rigid underlay as per E2/AS1 requirements, its horizontal and vertical joint does not require to be sealed with flashing tapes, but instead, a flexible underlay is applied over the entire rigid air barrier in accordance with Section 9.1.7.1. The flexible underlay must comply with Table 23 of E2/AS1. The wall openings must be flashed in accordance with E2/AS1 and this installation manual.

Figure 11: RAB Board used as backing board for stucco plaster/proprietary cladding systems

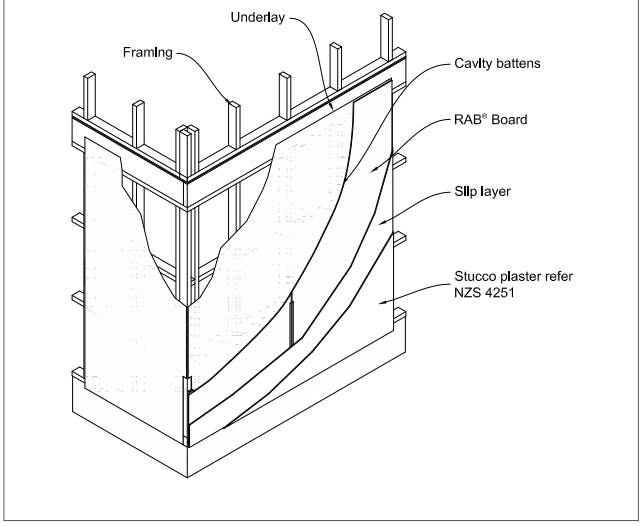

Figure 12: James Hardie Rigid Air Barriers to standard soffit

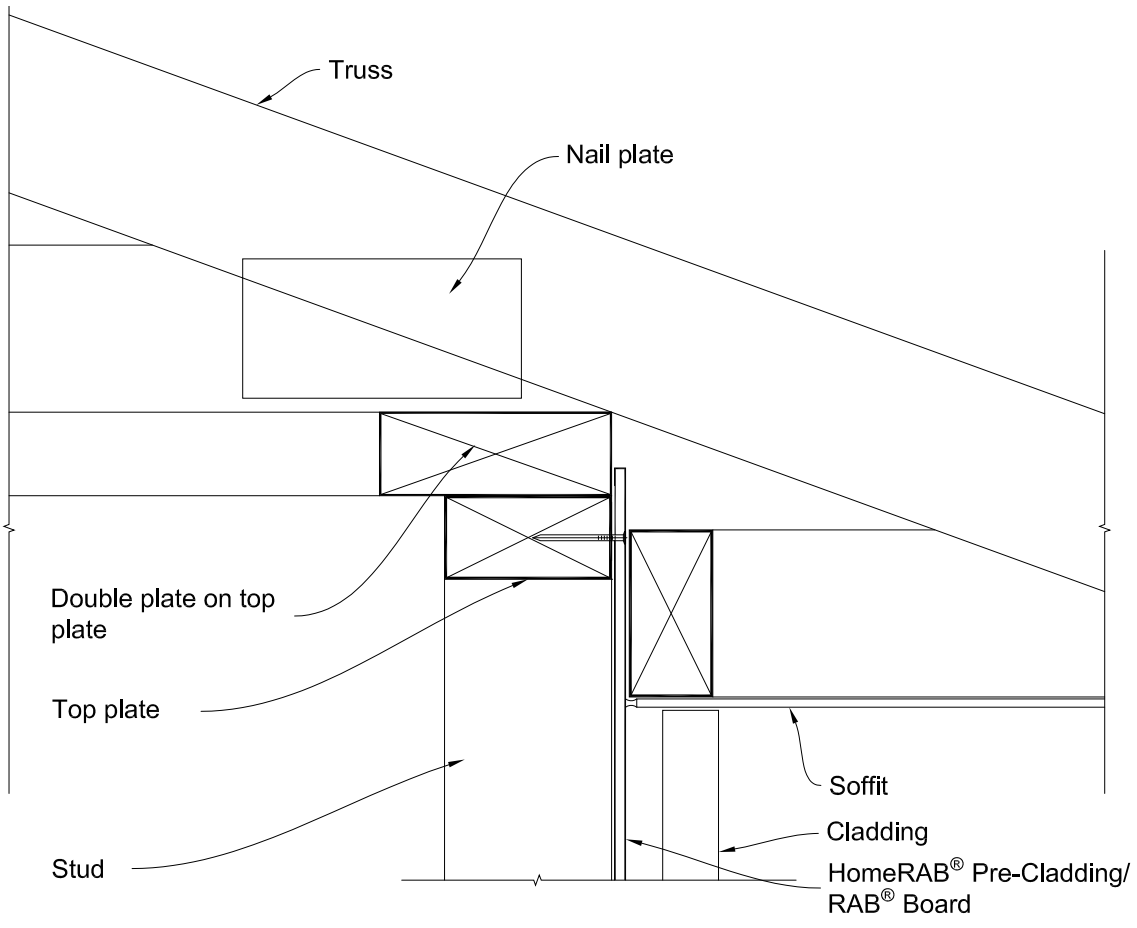

ABA20220988
APPROVED - Site Copy
Hastings District Council
20/09/2022

Figure 13: RAB Board to soffit junction/concrete

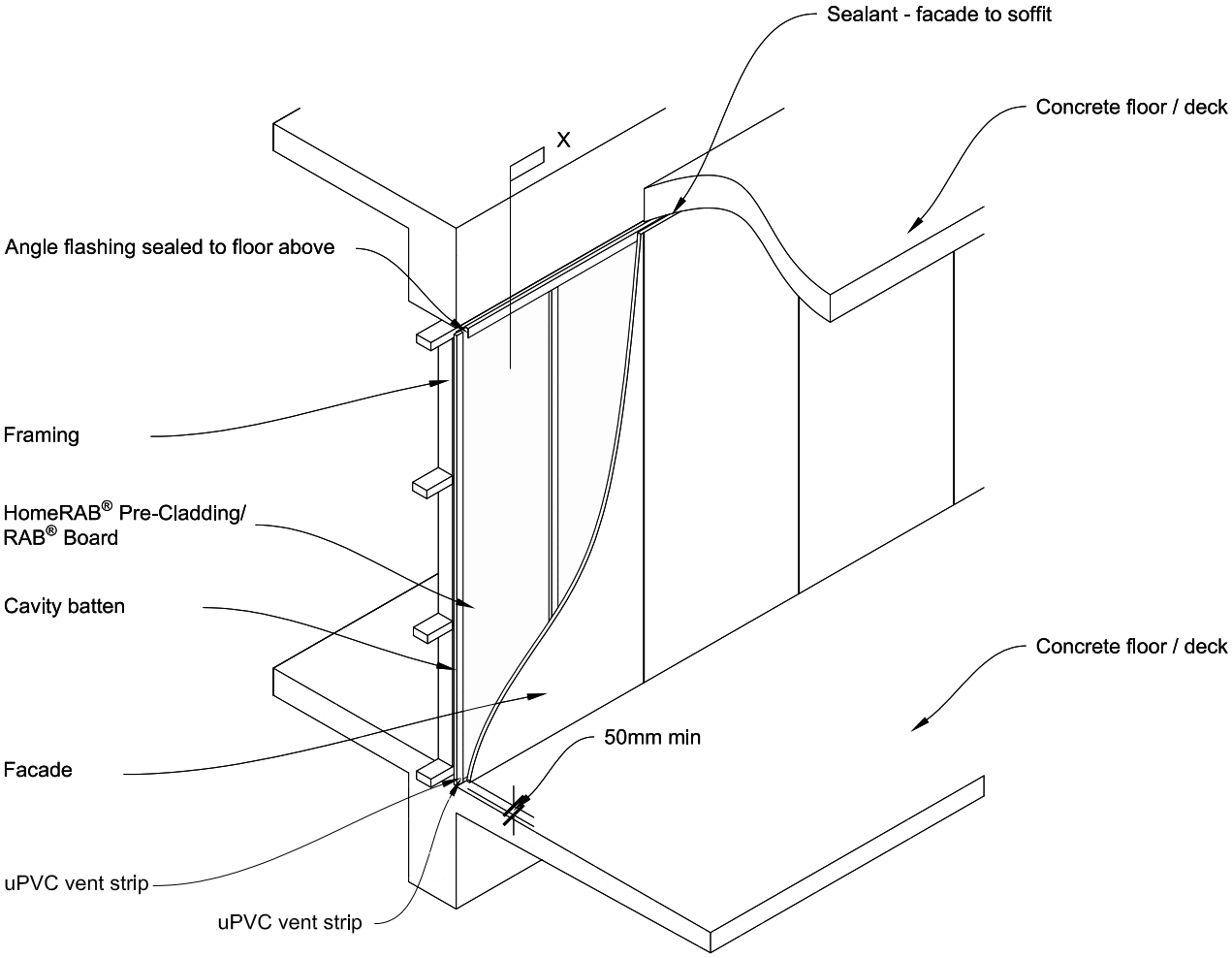

Note:
Check facade manufacturer for clearances

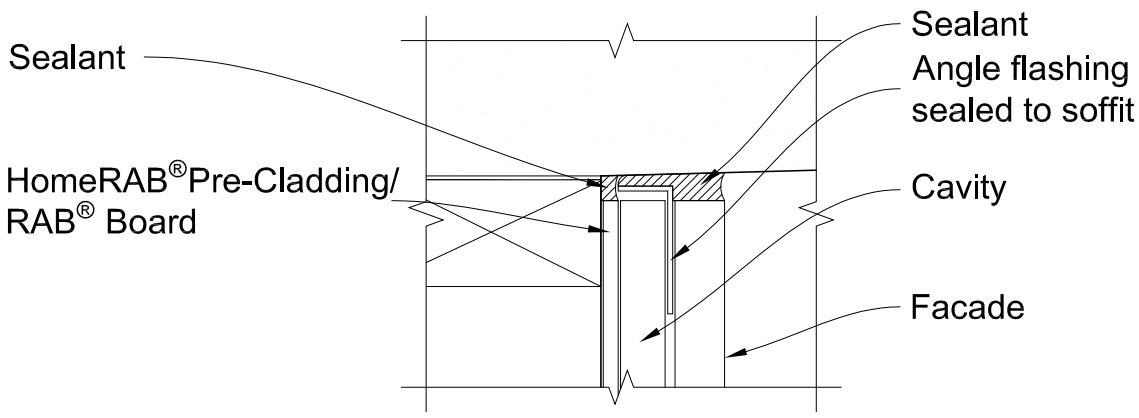

Section X

ABA20220988
APPROVED - Site Copy
Hastings District Council
20/09/2022

Penetrations

The pipe penetrations through James Hardie rigid air barrier must be sealed properly using a flexible flashing tape. Maintain a 100mm minimum cover of flashing over the board around the penetration.

Figure 14: Pipe penetration through James Hardie Rigid Air Barriers

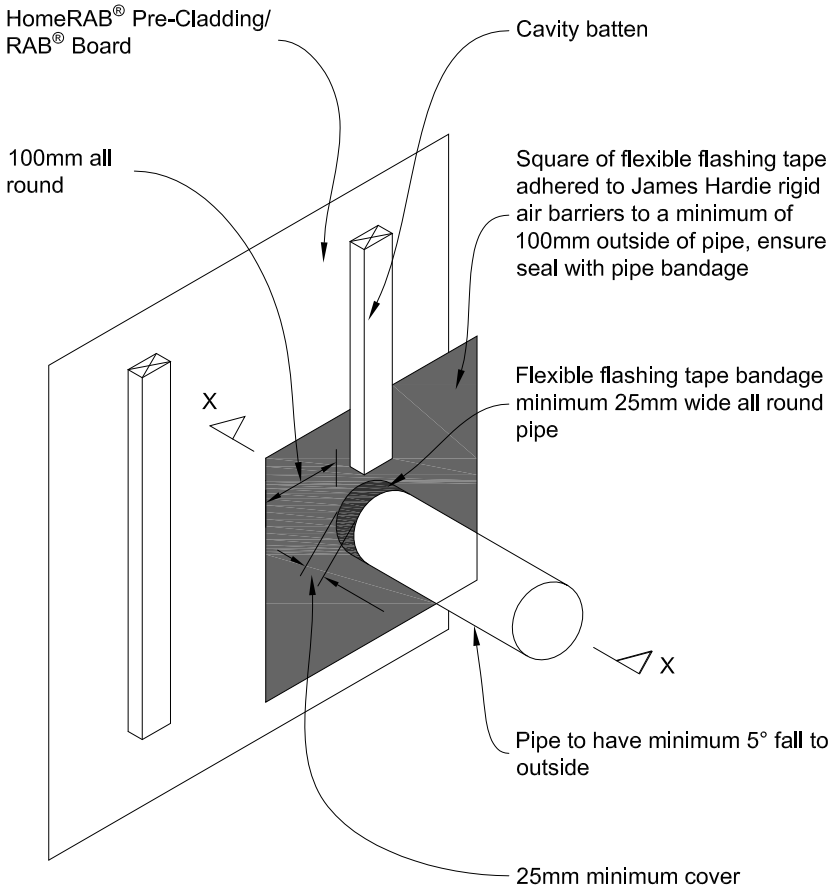

Note: Also refer to Figure 60 of E2/AS1 for information on pipe penetrations.

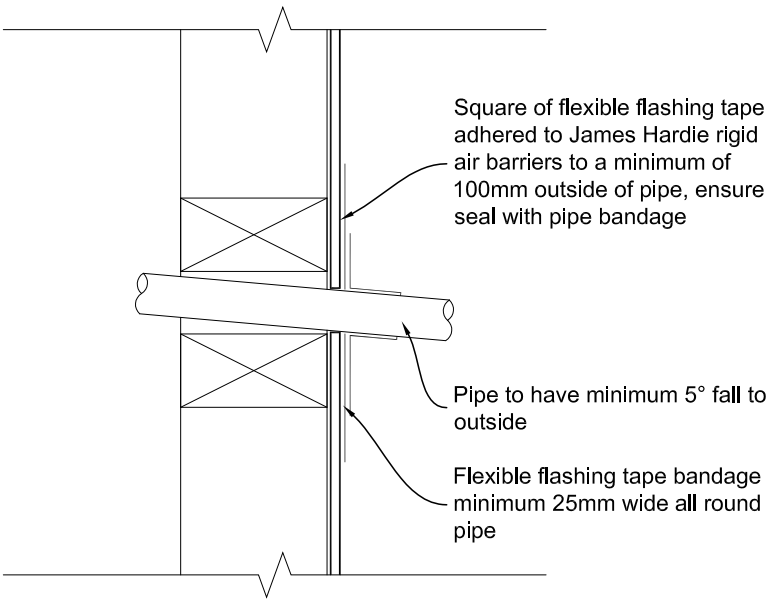

Section XX

ABA20220988
APPROVED - Site Copy
Hastings District Council
20/09/2022

Figure 15: Lintel connection

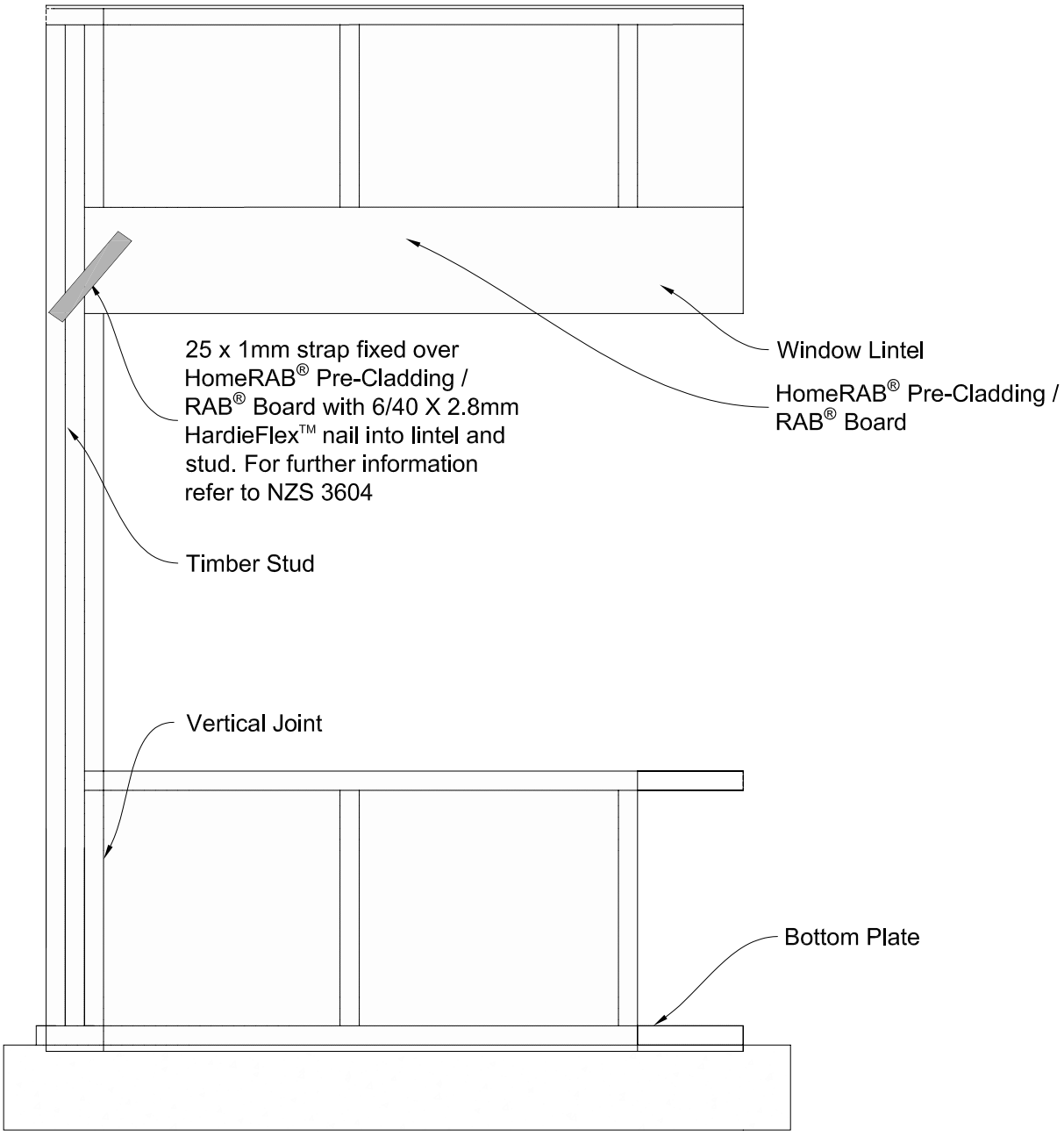

ABA20220988
APPROVED - Site Copy
Hastings District Council
20/09/2022

STUD TO TOP PLATE FIXING

Table 8.18 of NZS 3604 specifies two types of fixings i.e. Type-A with a fixing capacity of 0.7kN and Type-B with a fixing capacity 4.7kN. HomeRAB Pre-Cladding or RAB Board rigid air barriers have been tested and are verified as suitable alternatives to achieve the required stud top plate connectivity as mentioned above and no special use of straps/plates or wire dogs etc. is required.

For a 0.7kN connectivity, the standard fixing of HomeRAB Pre-Cladding and RAB Board using 40 x 2.8mm HardieFlex nails at 200mm centres maximum will achieve this.

For a 4.7kN connectivity, fix HomeRAB Pre-Cladding or RAB Board using 40 x 2.8mm HardieFlex nails at 75mm centres maximum to top plate with a minimum edge distance of 20mm. Refer to Figure 15.

Figure 16: Stud to top plate connection

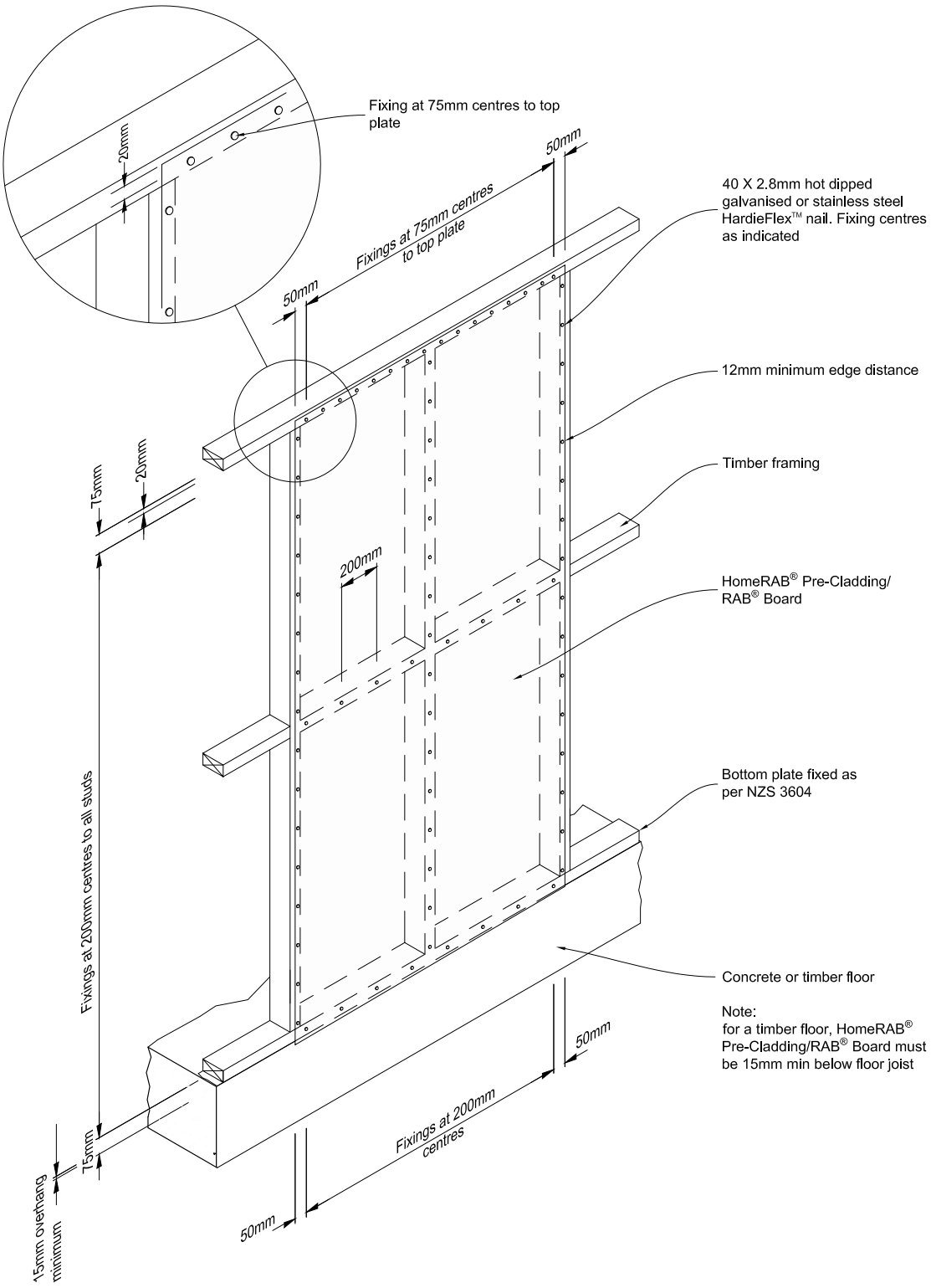

ABA20220988
APPROVED - Site Copy
Hastings District Council
20/09/2022

Flashings

The exposed timber framing around the window jamb can either be covered with a 150mm minimum wide flashing tape / sealing tape, refer Figure 19, or the jamb can be covered with a building underlay, refer Figure 20. The window sill must be dressed with a 150mm minimum wide flashing tape. The tape is sealed over the face of James Hardie rigid air barrier, refer Figure 16.

The James Hardie rigid air barrier surface must be clean, free of grime and dry before the tapes are applied. Some tape manufacturers require a primer tak spray be applied before fixing the tapes to the board surface to achieve a better tape adhesion. Check with the tape manufacturers for further information regarding minimum requirements etc.

Figure 17: Window flashing

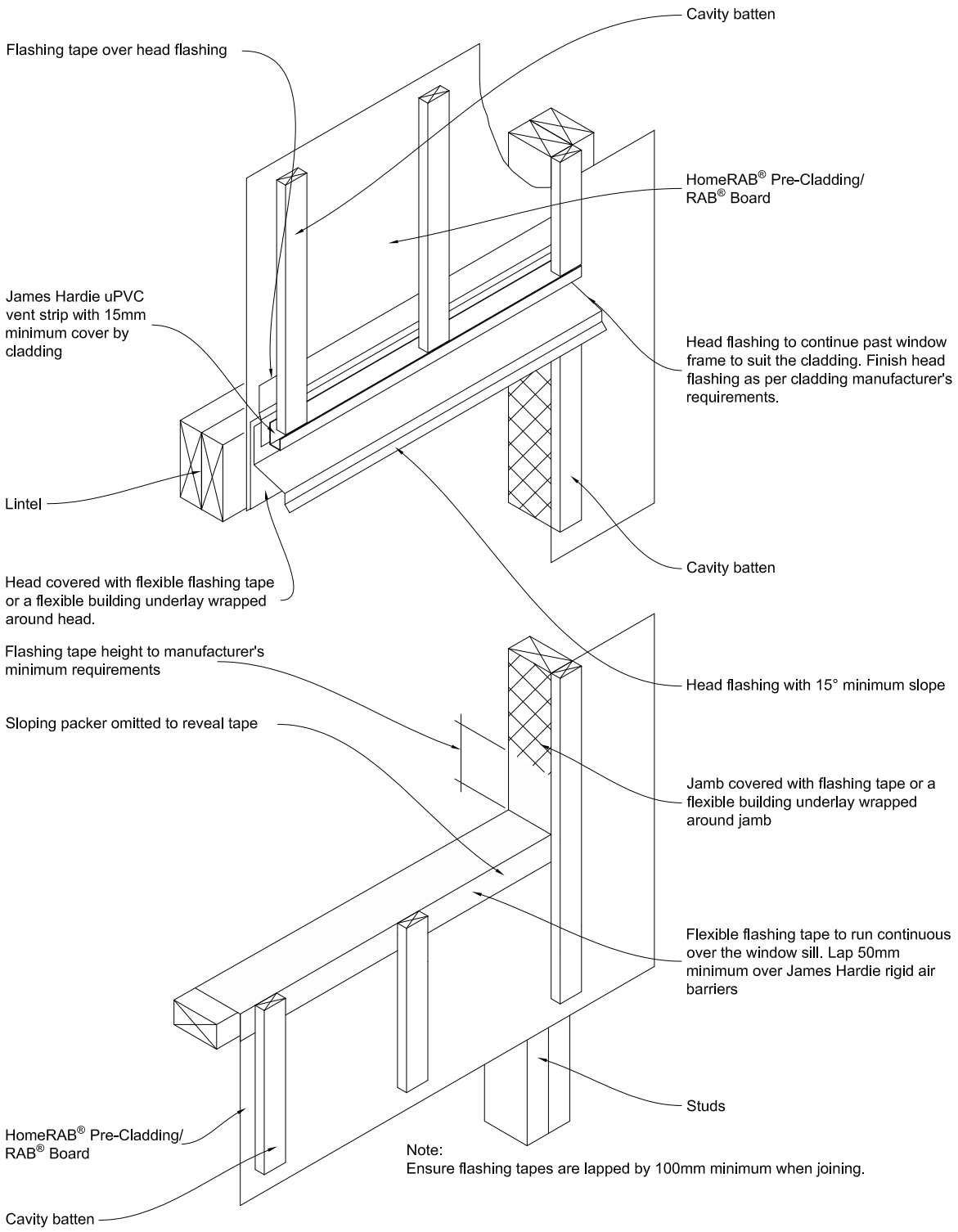

ABA20220988
APPROVED - Site Copy
Hastings District Council
20/09/2022

Figure 18: Apron flashing

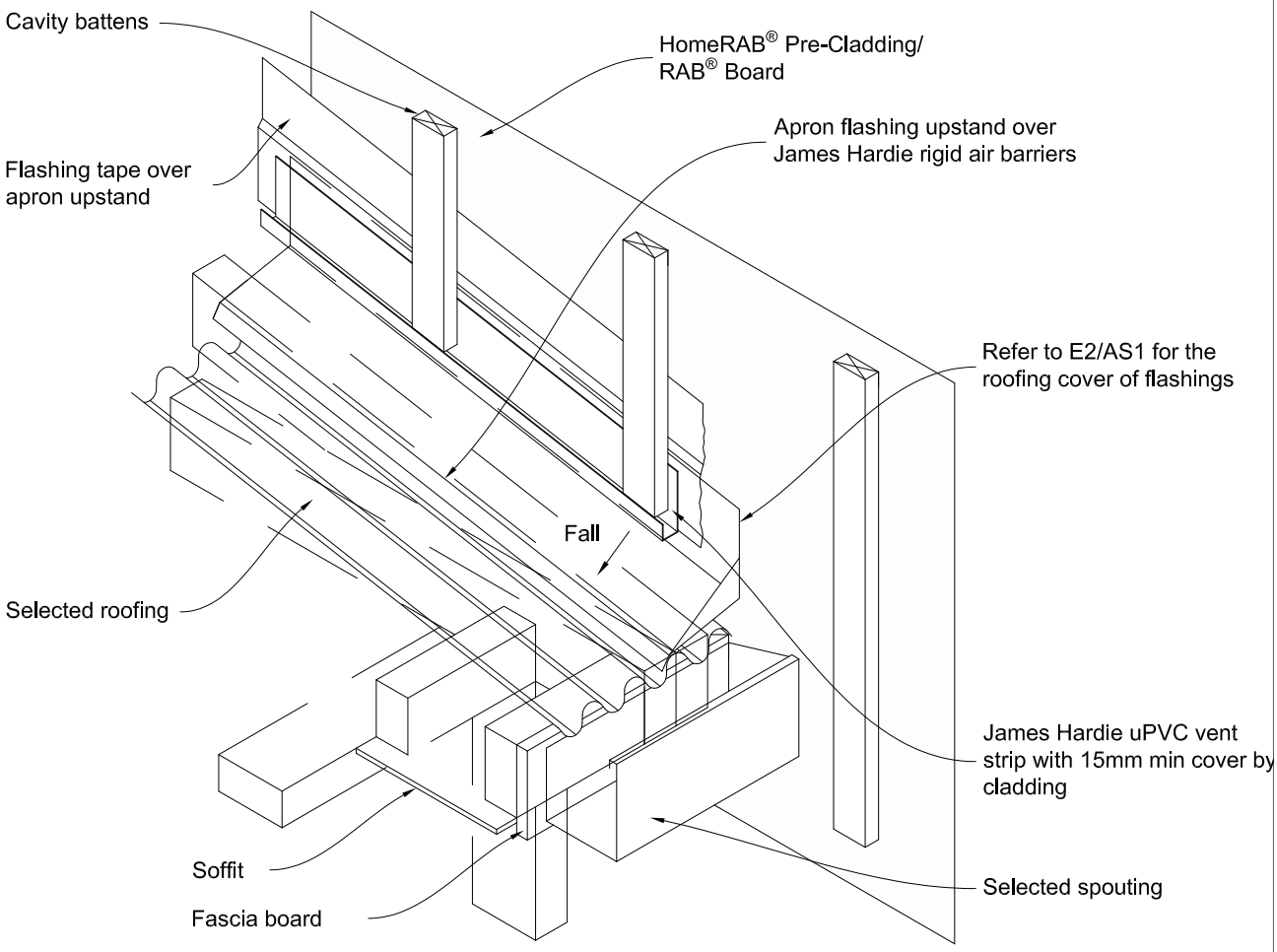

ABA20220988
APPROVED - Site Copy
Hastings District Council
20/09/2022

Balustrade to Wall Junctions

The junctions between balustrades to wall should be appropriately flashed. Refer to E2/AS1 of the NZBC for information and flashing details.

Figure 19: Flashing at balustrade

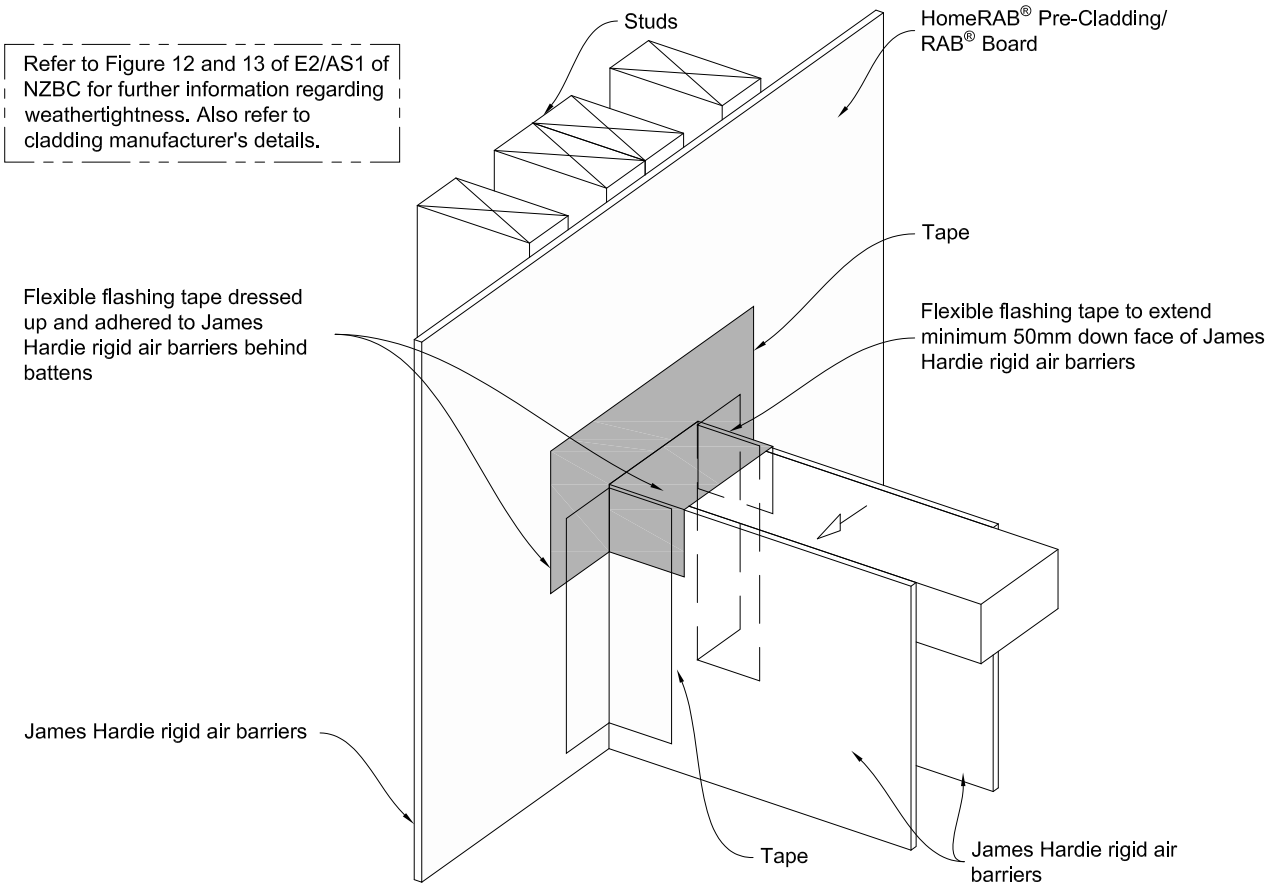

ABA20220988
APPROVED - Site Copy
Hastings District Council
20/09/2022

Figure 20: Window jamb with flashing tape

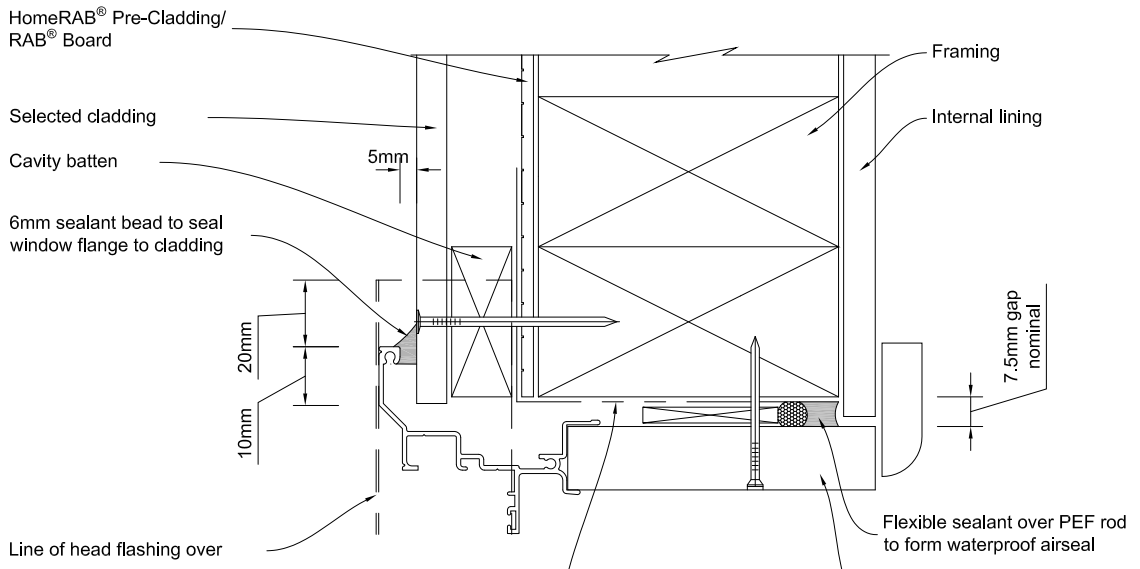

Note:
- For wind zones above VH and up to 2.5kPa wind pressure use RAB Board only.
- For higher wind pressures refer to cladding and window manufacturer.

Figure 21: Alternate window jamb with building underlay

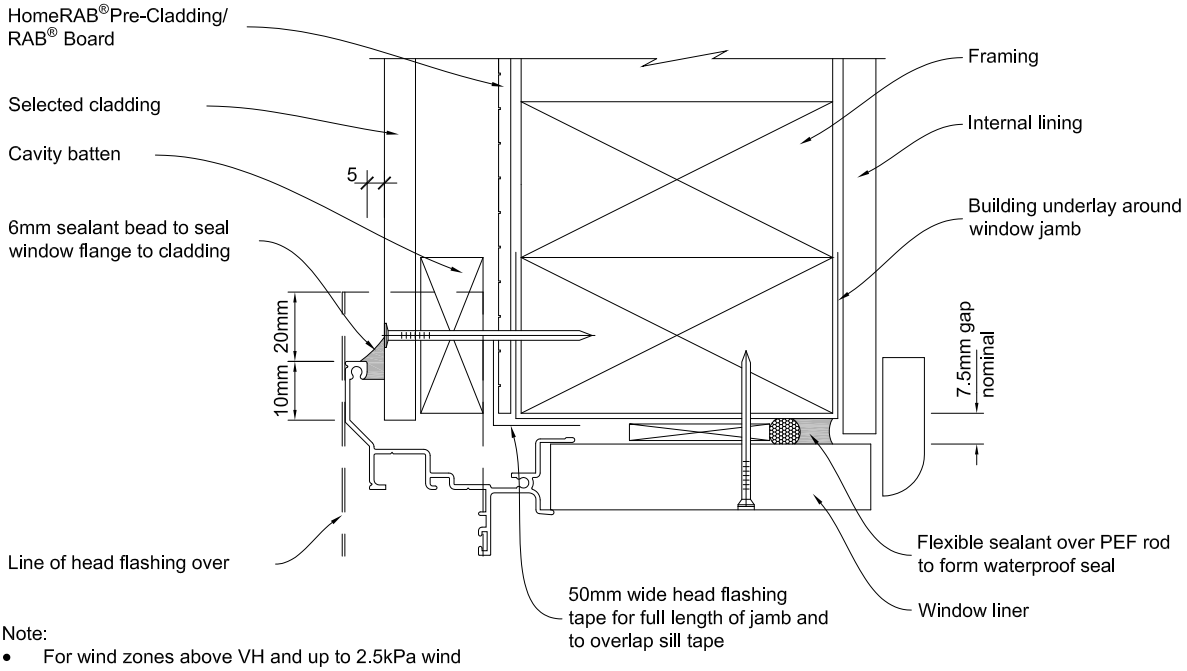

Note:
- For wind zones above VH and up to 2.5kPa wind pressure use RAB Board only.
- For higher wind pressures refer to cladding and window manufacturer.

Note: Flashing tapes must be installed to meet requirements of tape manufacturer

ABA20220988
APPROVED - Site Copy
Hastings District Council
20/09/2022

SURFACE CLEARANCES

James Hardie rigid air barriers must extend below the bottom plate by 15mm minimum over concrete foundation and 15mm past floor joist of timber foundation. James Hardie rigid air barriers must maintain a 100mm minimum clearance between the bottom edge of the sheet and the finished ground.

Check cladding manufacturer for minimum clearances required for the selected cladding.

Maintain the required clearances between the bottom plate and top of ground to comply with the NZBC and NZ standards. The adjacent finished ground must slope away from the building in accordance with the NZBC requirements. Do not install James Hardie rigid air barriers in such a way that it may remain in contact with standing water.

Figure 22: Foundation detail — direct fix cladding

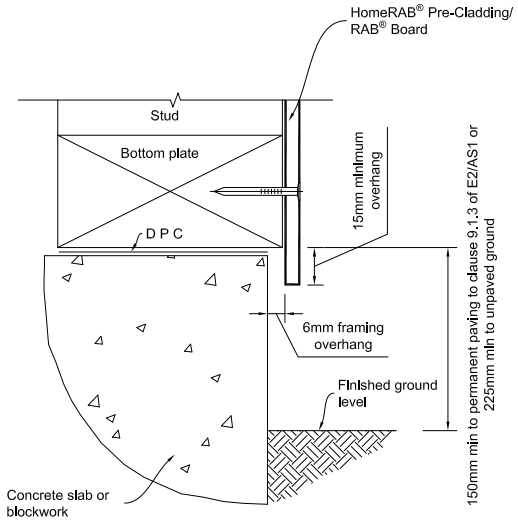

Figure 23: Foundation detail — cavity fix cladding

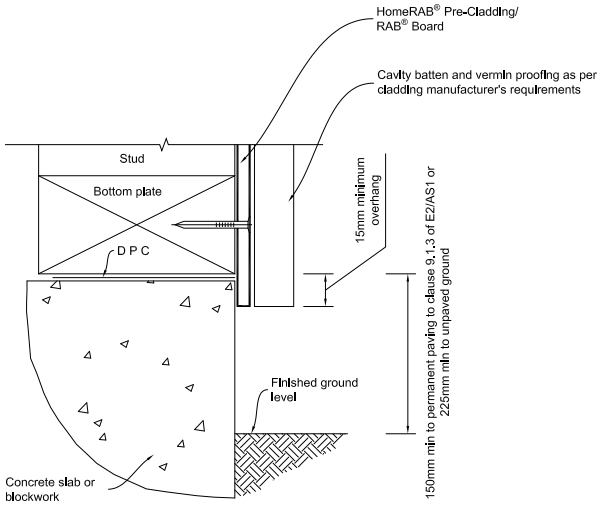

ALPINE REGIONS

In regions subject to freeze/thaw conditions, James Hardie rigid air barriers must not be in direct contact with snow or ice build up e.g. external walls in alpine regions subject to snow drifts over winter. James Hardie rigid air barriers have been tested to resist freeze thaw in accordance with AS/NZS 2908.2 clause 8.2.3 requirements and is suitable for use in alpine regions.

ABA20220988
APPROVED - Site Copy
Hastings District Council
20/09/2022

6 Product information

GENERAL

HomeRAB Pre-Cladding and RAB Board are cellulose fibre reinforced cement building products. The basic composition is Portland cement, ground sand, cellulose fibre and water.

RAB Board is easily identified by the name RAB Board printed on the back face. It has green colour water repellant sealer applied on its front face.

HomeRAB Pre-Cladding is easily identified by the name 'HomeRAB Pre-Cladding' on the front face. It has green colour water repellent sealer applied on its front face. The name is also printed on the back face of the lining.

HomeRAB Pre-Cladding and RAB Board are manufactured to conform to the requirements of AS/NZS 2908.2 'Cellulose-Cement Products Part 2: Flat Sheet (ISO 8336).

HomeRAB Pre-Cladding and RAB Board are classified Type B, Category 3 in accordance with AS/NZS 2908.2.

For Safety Data Sheets (SDS) visit www.jameshardie.co.nz or Ask James Hardie on 0800 808 868.

DURABILITY

Resistance to Moisture/Rotting

James Hardie rigid air barriers have been assessed for permanent moisture induced deterioration (rotting) and have met the expectation of AS/NZS 2908.2.

Resistance to Fire

James Hardie rigid air barriers have been tesed/assessed and are classified as Non-Combustible Material.

7 Finishes and maintenance

The selected cladding must be installed and finished within 90 days after the installation of James Hardie rigid air barriers, and the cladding must comply with the requirements of the NZBC. Regular cleaning and maintenance of claddings paints, joints, junctions, penetrations, flashings etc must be carried out at regular intervals and as per the requirements of the material manufacturers. Regular maintenance of cladding is also a requirement under the NZBC.

The ground clearances required for the James Hardie rigid air barriers and the cladding must always be maintained.

ABA20220988
APPROVED - Site Copy
Hastings District Council
20/09/2022

Notes

ABA20220988
APPROVED - Site Copy
Hastings District Council
20/09/2022

Notes

ABA20220988
APPROVED - Site Copy
Hastings District Council
20/09/2022

Product Warranty

James Hardie®
RIGID AIR BARRIERS

April 2016

James Hardie New Zealand ("James Hardie") warrants for a period of 15 years from the date of purchase that the HomeRAB® Pre-Cladding/RAB® Board (the "Product"), will be free from defects due to defective factory workmanship or materials and, subject to compliance with the conditions below, will be resistant to cracking, rotting, fire and damage from termite attacks to the extent set out in James Hardie's relevant published literature current at the time of installation. James Hardie warrants for a period of 15 years from the date of purchase that the accessories supplied by James Hardie will be free from defects due to defective factory workmanship or materials. Nothing in this document shall exclude or modify any legal rights a customer may have under the Consumer Guarantees Act or otherwise which cannot be excluded or modified at law.

CONDITIONS OF WARRANTY:

The warranty is strictly subject to the following conditions:

a) James Hardie will not be liable for breach of warranty unless the claimant provides proof of purchase and makes a written claim either within 30 days after the defect would have become reasonably apparent or, if the defect was reasonably apparent prior to installation, then the claim must be made prior to installation;

b) this warranty is not transferable;

c) the Product must be installed and maintained strictly in accordance with the relevant James Hardie literature current at the time of installation and must be installed in conjunction with the components or products specified in the literature. Further, all other products, including coating and jointing systems, applied to or used in conjunction with the Product must be applied or installed and maintained strictly in accordance with the relevant manufacturer's instructions and good trade practice;

d) the project must be designed and constructed in strict compliance with all relevant provisions of the current New Zealand Building Code ("NZBC"), regulations and standards;

e) the claimant's sole remedy for breach of warranty is (at James Hardie's option) that James Hardie will either supply replacement product, rectify the affected product or pay for the cost of the replacement or rectification of the affected product;

f) James Hardie will not be liable for any losses or damages (whether direct or indirect) including property damage or personal injury, consequential loss, economic loss or loss of profits, arising in contract or negligence or howsoever arising. Without limiting the foregoing James Hardie will not be liable for any claims, damages or defects arising from or in any way attributable to poor workmanship, poor design or detailing, settlement or structural movement and/or movement of materials to which the Product is attached, incorrect design of the structure, acts of God including but not limited to earthquakes, cyclones, floods or other severe weather conditions or unusual climatic conditions, efflorescence or performance of paint/coatings applied to the Product, normal wear and tear, growth of mould, mildew, fungi, bacteria, or any organism on any Product surface or Product (whether on the exposed or unexposed surfaces);

g) all warranties, conditions, liabilities and obligations other than those specified in this warranty are excluded to the fullest extent allowed by law;

h) if meeting a claim under this warranty involves re-coating of Products, there may be slight colour differences between the original and replacement Products due to the effects of weathering and variations in materials over time.

Disclaimer: The recommendations in James Hardie's literature are based on good building practice, but are not an exhaustive statement of all relevant information and are subject to conditions (c), (d), (f) and (g) above. James Hardie has tested the performance of the HomeRAB® Pre-Cladding/RAB® Board when installed in accordance with the HomeRAB® Pre-Cladding/RAB® Board installation manual in accordance with the standards and verification methods required by the NZBC and those test results demonstrate the product complies with the performance criteria established by the NZBC. However, as the successful performance of the relevant system depends on numerous factors outside the control of James Hardie (e.g. quality of workmanship and design) James Hardie shall not be liable for the recommendations made in its literature and the performance of the relevant system, including its suitability for any purpose or ability to satisfy the relevant provisions of the NZBC, regulations and standards, as it is the responsibility of the building designer to ensure that the details and recommendations provided in the relevant James Hardie installation manual are suitable for the intended project and that specific design is conducted where appropriate.

Copyright April 2016. © James Hardie New Zealand. TM and ® denotes a Trademark or Registered Mark owned by James Hardie Technology Limited.

ABA20220988
APPROVED - Site Copy
Hastings District Council
20/09/2022

James Hardie
a smarter way™



Ask James Hardie™ | Call 0800 808 868 | jameshardie.co.nz

Copyright April 2016. © James Hardie New Zealand. TM and ® denotes a Trademark or Registered Mark owned by James Hardie Technology Limited.

ABA20220988
APPROVED - Site Copy
Hastings District Council
20/09/2022

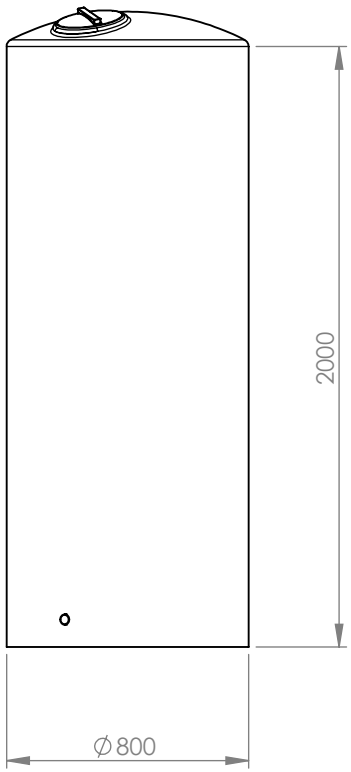

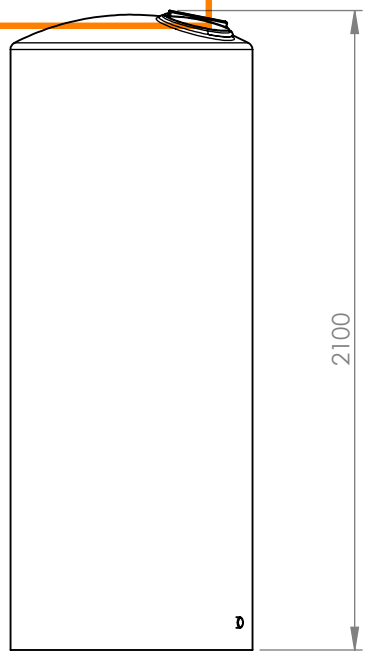

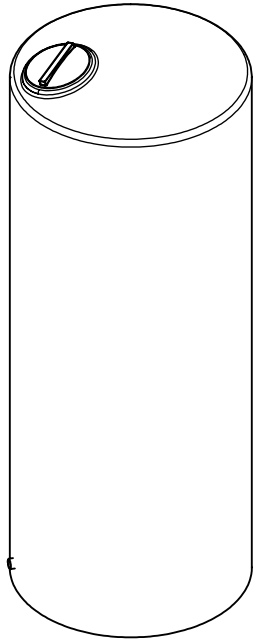

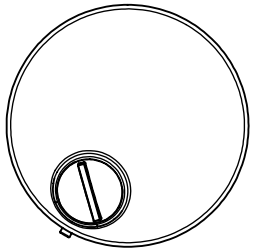

	NAME	DATE
DRAWN	D.I.B.	20 July 2006
CHK'D		
APPV'D		

DIMENSIONS ARE APPROXIMATE DUE TO VARIATIONS IN THE MANUFACTURING PROCESS

DO NOT SCALE DRAWING

Copyright Bailey Tanks Limited 2006

WEIGHT: 30kg

BAILEYTANKS

DWG NO. BT1000 NZ

A4

SCALE 1:25 | SHEET 1 OF 1 | REVISION

ABA20220988
APPROVED - Site Copy
Hastings District Council
20/09/2022

INSTALLATION INSTRUCTIONS

425 – 5000 Litre Water Tanks

Site Preparation

- Installation is the responsibility of the purchaser.
- The site should be **firm, level, stable** ground.
- The base of the tank should be adequately and uniformly supported over its whole area.
- If using a tank stand, planks should be no more than 10mm apart.
- Ensure that the area is free from any sharp objects such as stones or roots.
- If cutting a level site into a sloping section make sure the area will not erode and do not back fill against the tank.
- The tank is not able to be buried.
- **Do not walk on or put weight on the dome of the tank.**

Plumbing

425 Litres and 3000 Litres
A 1” BSP outlet is fitted to the base of the tank ready for you to screw in your fittings, a reducing bush can be used if required.

5000 Litres
A 2” BSP outlet is fitted to the base of the tank ready for you to screw in your fittings, a reducing bush can be used if required.

Connection between the tank and a pump should include a flexible hose to absorb vibration.

Pipework between tanks or rigid structures should include a flexible hose or a 90-degree loop to allow for expansion or shrinkage with temperature changes.

Use the appropriate sized holesaw to cut the hole for inlets and outlets.

Do not use chisels or punches.

Pipe the overflow away from the foundation to prevent erosion.

ABA20220988
APPROVED - Site Copy
Hastings District Council
20/09/2022

Water Tank Maintenance Manual

Access to your water tank:

Access to your water tank is via the inspection hatch on the top of the tank. All cleaning and maintenance should be performed from the outside of the water tank.

Entering a water storage tank should be performed only by properly equipped and trained personnel.

- When entering a water tank follow the 'Safe Working in a Confined Space' guidelines provided by The Department of Labour.
- Always ensure there is another person on site with you at all times while you are in the water tank in case of an emergency.
- Ensure you have access out of the tank i.e. a rope ladder.
- Never use solvents, chemicals, electric powered lights or tools, or petrol powered equipment inside the water tank.

Frequency of inspections:

Inspect the inside of your water tank at least annually. Inspect the inlet, overflow and outlet monthly for signs of build up.

Cleaning of your water tank and fittings:

Bailey Tanks recommends that the cleaning of your water tank be performed by professional tank cleaners.

Visually inspect water tank interior through the inspection hatch. If excess mineral build-up, is noted, drain the water tank and remove sediment that has collected on tank bottom using a soft bristle broom, squeegee or vacuum. Rinse with clean water and flush out tank if possible.

To prevent build up of sediment and debris in your water tank ensure your gutters are cleaned regularly.

Tree limbs and bushes should be trimmed away from the water tank.

ABA20220988
APPROVED - Site Copy
Hastings District Council
20/09/2022

SUPPLIER DECLARATION OF CONFORMITY (SDoC)

In accordance with ISO/IEC 17050-1:2004

ABA20220988
APPROVED - Site Copy
Hastings District Council
20/09/2022

SDoC identification Number[1]: 325180

Issuer details

Name[2] (of New Zealand manufacturer or importer): Rheem New Zealand Limited

Telephone: +61 9 8290200

New Zealand Company No. (if applicable): 1175771

Email Address: www.rheem.co.nz

Contact Address:
475 Rosebank Road
Avondale 1026
Auckland
New Zealand

Medium Risk Article – Details[3] (Product name, type, rating, brand, model, batch numbers, and serial numbers, as applicable):

Model number	Dimensions (mm)	Description
32518033-0	488x1770H	MP SS 180L Int/Ext 488x1770H 2x2kW
32518035-0	488x1770H	MP SS 180L Int/Ext 488x1770H 2+3kW
32518003-0	488x1770H	MP SS 180L Int/Ext 488x1770H 2kW
32518005-0	488x1770H	MP SS 180L Int/Ext 488x1770H 3kW

The Medium Risk Article listed above, fully complies:

With cited standard(s), as listed[4]:

Standard number and issue year: AS/NZS 60335.1:2002

Edition / Amendment status: Incl. Amdts. 1-4

Standard title: "Household and similar electrical appliances – Safety – General requirements"

AS/NZS ZZ modified Yes ☐ No ☐ N/A ☒

Standard number and issue year: AS/NZS 60335.2.21:2002

Edition / Amendment status: Incl. Amdts. 1-3

Standard title: "Particular requirements for storage water heaters"

AS/NZS ZZ modified Yes ☐ No ☐ N/A ☒

OR Complies with the Conformity Cooperation Agreement[5] Yes ☐ No ☒

Names and addresses of any testing organisation or body

Name(s): Spectrum Laboratories

Address(es): 1/25 Highbrook Drive, East Tamaki, Auckland PO Box 259-182 Greenmount Auckland 1730

Name(s):

Address(es):

Reference to relevant test reports/certification and the issue date that show how compliance is achieved

Standard(s) or document(s) used, to show how compliance with cited standard is achieved: Test report # 5282

Report Certification or Document reference N°(s):

Issue dates(s): 14/05/2012

Reference to any management quality system involved: NATA and IANZ accredited

Additional information[6]:

Declaration

I hereby declare that the above specified fittings or electrical appliances comply with the requirements of Regulation 83 of the Electricity (Safety) Regulations 2010.

Signed for and on behalf of: Rheem New Zealand Limited

Name and position as authorized by the issuer[7]: Chris Wheeler, R&D Manager

Signature: C Wheeler

Issuer Identification (as affixed to the article)

Rheem

Date: 02/07/2012

ABA20220988
APPROVED - Site Copy
Hastings District Council
20/09/2022

MAINS PRESSURE – STAINLESS STEEL

Rheem Stainless Steel Mains Pressure Electric*					
Product Code		3251350*-0	3251800*-0	32525005-0A	32530005-0A
Approx. Storage Capacity	Litres	135	180	250	300
Weight Empty	Kg	30	37.5	41	48
Inlet/Outlet Connections				RP ¾" / 20	
Solar/HP Feed Connection		-		RP ¾" / 20	
Solar/HP Return Connection		-		RP ¾" / 20	
TPR Valve Connection				RP ½" / 15	
TPR Valve Setting	kPa	1000	1000	850	850
Dimensions:	mm				
A		1350	1770	1595	1890
B		490	490	580	580
C		195	200	205	205
D		1170	1575	1395	1690
E		-	550	605	605
Element Rating	kW	2.0 or 3.0	2.0 or 3.0	3.0	3.0
Top Element Rating (kit-set)	kW	-	2.0	3.0	3.0
Boost Capacity (Twin Element)	Litres	-	60	110	135

*Add to end of product code: 3 for 2kW; or 5 for 3kW

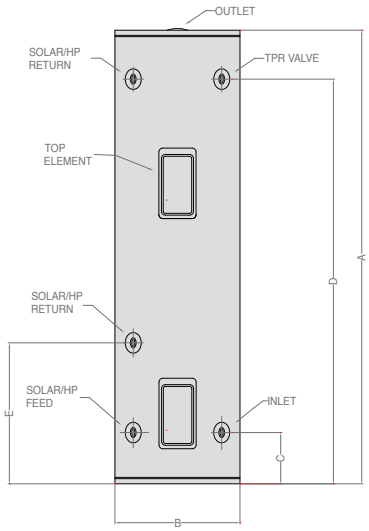

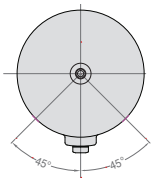

MAINS PRESSURE – STAINLESS STEEL COIL

Description		Connection	Lower Coil		Mid Coil		Dual Coil	
Models		L = Left R = Right	35625015LL 35625015LR	35630015LL 35630015LR	35625015ML 35625015MR	35630015ML 35630015MR	35625015DL	35630015DL
Approx. Storage Capacity			250L	300L	250L	300L	250L	300L
Cylinder Diameter (mm)			560	560	560	560	560	560
Cylinder Height (mm)			1725	2045	1725	2045	1725	2045
A	Hot Water Draw-Off	¾" BSP F	1725*	2045*	1725*	2045*	1725*	2045*
B	Right/Left Cold Feed (High Pressure) Inlet	¾" BSP F	200*	200*	200*	200*	200*	200*
C	Left/Right Cold Feed (High Pressure)	¾" BSP F	200*	200*	200*	200*	-	-
D	Safety TPR	¾" BSP F	1500*	1810*	1500*	1810*	1500*	1810*
E	From Solar (Inlet)/Heat Pump Return Kit set	¾" BSP F	370*	370*	370*	370*	370*	370*
F	To Solar/Heat Pump (Direct Outlet)	¾" BSP F	200*	200*	200*	200*	370*	370*
G	Secondary Solar/Wetback Flow (Coil)	¾" BSP F & 1" BSP M	685*	685*	1285*	1285*	1340*	1340*
H	Secondary Solar/Wetback Return (Coil)	¾" BSP F & 1" BSP M	245*	245*	485*	485*	540*	540*
J	Lower Element (3kW)	1 1/4" BSP F	✓	✓	✓	✓	✓	✓
K	Upper Element*** (3kW)	1 1/4" BSP F	✓	✓	✓	✓	✓	✓
L	Sensor Probe Pocket	Ø8.5mm × 120mm Tube	✓	✓	✓	✓	✓	✓
M1	Coil^		10m	10m	10m	10m	10m	10m
M2	Coil^		-	-	-	-	7.6m	7.6m

F = Female M = Male *Fitting heights measured from bottom of cylinder (mm).
All measurements are nominal.
**Compressed solar coils require a pumped base system.
***Upper element supplied plugged. Element and thermostat kit sold as optional extra (part 417026).
All cylinders supplied with 46kW TPR Valve 850kPa.
^ Incoming heat source of 80°C
= nominal 25kW for M1 Coil
= nominal 20kW for M2 Coil

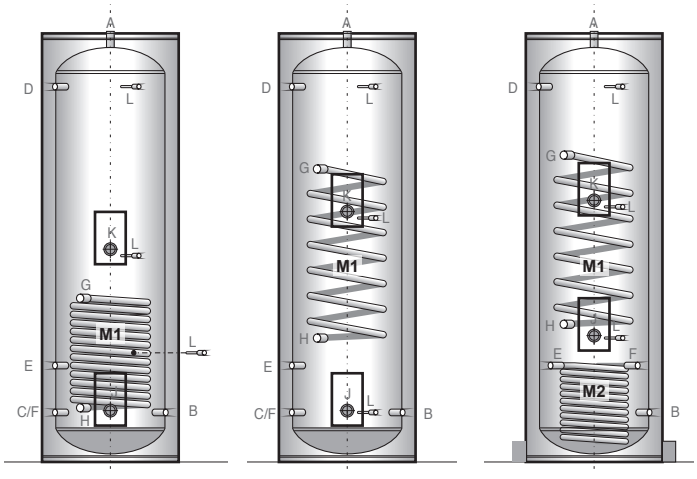

ABA20220988
APPROVED - Site Copy
Hastings District Council
20/09/2022

316581G
May 2018

INSTALLATION INSTRUCTIONS
&
OWNERS GUIDE

RHEEM MAINS PRESSURE ELECTRIC HOT WATER HEATERS

Congratulations for choosing a Rheem Water Heater

It is important that you take a few minutes
to read this booklet as it may save you
time and trouble later.
If you require any further information or your
water heater needs to be serviced, please contact the
Rheem Service Department on 0800 657 335,
or the nearest service centre
(look in the Yellow Pages under “Plumbers”)
Or visit www.rheem.co.nz

Important to the Installer

Do not leave this booklet inside the element cover
after installation
Please leave the booklet with the water heater’s owner

ABA20220988
APPROVED Site Copy
Hastings District Council
20/09/2022

IMPORTANT INFORMATION

GENERAL

- The information contained in this manual, and all other information or advice given at any time by Rheem New Zealand Limited in connection with the purchase, installation or use of a Rheem water heater, is given in good faith. Subject to any rights the owner may have under the “Consumer Guarantees Act 1993”, Rheem New Zealand Limited will not be liable to any person for any inaccuracy or omission in the information or advice arising through the fault or negligence of Rheem New Zealand Limited or any other person or through any other cause whatsoever.
- This water heater is not intended to be operated, adjusted or tampered with by young children or infirm persons. Young children should be supervised to ensure they do not play with the water heater.

ABOUT YOUR WATER HEATER

Q. DOES THE WATER QUALITY AFFECT THE WATER HEATER?

A. Your water heater is suitable for most public water supplies, however, some water qualities may have a detrimental effect on it. **If you are in a known harsh water area please refer to page 6**.

Q. HOW HOT SHOULD THE WATER BE?

A. All models (temperature range 60 - 70°C) require an authorised person to make any temperature adjustments. For reasons of safety and economy, we advise the thermostat is adjusted to the lowest setting that meets your needs.

The New Zealand Building Code requires a stored temperature setting of not less than 60°C. A tempering valve set at a maximum of 55°C must be used on domestic wet areas.

Q. HOW DO I KNOW IF THE WATER HEATER IS INSTALLED CORRECTLY?

A. Refer to the installation requirements on page 4.

Q. HOW LONG WILL THE WATER HEATER LAST?

A. There are a number of factors that affect the life of the water heater. These include; the water quality, water pressure, water temperature and the usage pattern, however, your Rheem water heater is supported by a comprehensive warranty (refer to page 7).

The life of the water heater may be extended by arranging for an authorised person to inspect the anode and replace it, if required.

The suggested time after installation when the anode should be inspected is:
Vitreous Enamel 8 years
Optima 10 years

For softened water supplies or in areas of poor water quality, it is recommended the anode be inspected 3 years earlier than shown (refer to "Water Quality" on page 6).

HOW THE WATER HEATER WORKS

SINGLE AND TWIN ELEMENT MODELS

Water stored within the water heater is heated by the electric heating element. The thermostat controls the electricity supply to the heating element so that a constant water temperature is maintained. As the cold water is heated it expands approximately 1/50 of its volume and, as a result, a small amount of water is discharged from the cold water expansion valve.

NON-SIMULTANEOUS ELEMENT MODELS

The two heating elements are wired for non-simultaneous operation, so that only one heating unit can operate at a time. The bottom heating unit is usually connected to an off-peak (overnight) supply and the top heating unit to a continuous supply. **The red link wire must be removed from the terminal block during installation if two separate power supplies are to be used**. Leaving the link in place ensures both elements operate correctly with a single power supply.

The basic operation is as follows: when the water temperature at the top of the water heater has reached the set temperature, the thermostat switches the top element off. This creates a circuit to the bottom heating element by switching the neutral.

SAFETY

On all models, a Temperature and Pressure Relief valve is supplied with each water heater. It can be found inside the front cover and must be mounted on top of the water heater.

Also fitted to the water heater is a thermostat, which incorporates an over-temperature thermal cut-out device.

⚠ ***Warning:*** *The operation of the thermal cut-out indicates a possible dangerous situation. The thermostat and thermal cut-out is to only be adjusted or reset by an authorised service person.*

ABA20220988
APPROVED - Site Copy
Hastings District Council
20/09/2022

These safety devices must not be tampered with, or removed, and under no circumstances operate the water heater unless both devices are fitted.

REGULAR CARE

MANUALLY OPERATING THE TEMPERATURE AND PRESSURE RELIEF (TPR) VALVE:

The easing lever (see diagram. 1) on the TPR valve should be operated regularly to remove lime deposits and verify that it is not blocked. **It is very important that you raise and lower the lever gently.**

⚠ ***Warning:*** *To ensure the relief valve is working correctly, operate the relief valve easing lever at least every six months. Failure to do this may result in the water heater over-pressurising.*

DIAGRAM 1

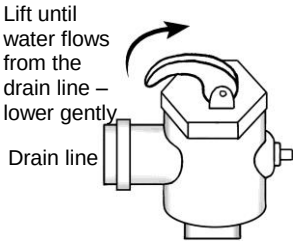

Water Heater

If water does not flow freely from the drain line or the valve fails to completely close and water continues to be discharged, contact the Rheem Service Department, phone **0800 657 335,** or the nearest Rheem Service Centre (look in the Yellow Pages under "Plumbers).

GOING ON HOLIDAYS:

If you plan to be away from home for one or two nights, we suggest that you leave the water heater switched on. However, if you plan to stay away more than a few nights, conserve energy by switching the water heater off at the isolating switch, or at the main switchboard. In locations where freezing could occur, you should leave the water heater turned on.

SAVE A SERVICE CALL

CHECK THE ITEMS BELOW BEFORE MAKING A SERVICE CALL. YOU MAY BE CHARGED FOR SERVICE IF THE FAULT IS NOT RELATED TO THE WATER HEATER MANUFACTURE OR PARTS SUPPLIED WITH THE WATER HEATER BY RHEEM.

WATER DISCHARGING FROM EXPANSION CONTROL VALVES

It is normal for the cold water expansion valve and the temperature and pressure relief valve to discharge a small quantity of water during the heating cycle. If either of these valves discharge more than a bucket full of water in 24 hours, one of the following may be the cause.

- **Continuous dribble**
  Try gently raising the easing lever on the relief valve for a few seconds. This may dislodge small particles of foreign matter and clear the fault.
- **Heavy flow of hot water until the water is cold – then stops while the water reheats**
  Immediately turn off the electricity supply to the water heater. Call the Rheem Service Department or look in the Yellow Pages under "Plumbers" for your nearest Rheem Service Centre or www.rheem.co.nz to arrange an inspection.
- **A steady flow of water (often at night)**
  This may indicate that your cold water pressure sometimes rises above the design pressure of the water heater. A Pressure Limiting valve should be installed, or if one is installed, it may need replacing.

NOT ENOUGH HOT WATER (or no hot water)

- **Is the electricity turned on?**
  Check the switch marked 'water heater' at the switchboard and the water heater isolating switch.
  Check the fuse or circuit breaker marked 'water heater'.

WHERE THE WATER HEATER IS CONNECTED TO AN OFF PEAK (NIGHT RATE) ELECTRICAL TARIFF, THE SUPPLY MAY NOT BE AVAILABLE AT CERTAIN TIMES OF THE DAY.

- **Do you have the correct size heater for your requirements?**
  Refer to the sizing guide in the Rheem sales literature or the Rheem website.
- **Is one outlet (especially the shower) using more hot water than you think?**
  Carefully review the family's hot water usage and if necessary, check the shower flow rate.
  For maximum efficiency we recommend the flow rate through the shower is between 8 to 10 litres per minute (mixed hot and cold). This can be achieved by installing a flow control valve if provision is not made to fit a flow restrictor in the shower rose.
- **Ensure the thermostat setting is appropriate. Note, some models require an authorised person to make electrical thermostat adjustments.**

HIGH ELECTRICITY BILLS

- **Consider recent changes to your hot water usage pattern and check if there has been an increase in tariffs since your previous account.**
- **Is either of the expansion valves discharging too much water?**

ABA20220988
APPROVED - Site Copy
Hastings District Council
20/09/2022

- **Is one outlet (especially the shower) using more hot water than you think?**
- **Is there a leaking hot water pipe, dripping hot water tap, etc?**
  Even a small leak will waste a surprisingly large quantity of hot water and energy. Replace faulty tap washers, and have your plumber rectify any leaking pipe-work.

INSTALLATION

Please take careful notice of the advice given as Rheem New Zealand Limited will not be liable for any loss or damage suffered as a result of the incorrect installation of the water heater, or any failure to check the capability of the electrical supply wiring to the water heater.
The water heater must be installed by a certified person or registered plumber and the installation must comply with the New Zealand Building Code, Rheem Installation Instructions, AS/NZS 3000 electrical installations and all local codes and regulatory authority requirements. Note that no warranty costs will be payable where the water heater is located in a position that does not comply with the Rheem water heater installation instructions or relevant statutory requirements, where the unit is installed in a position that does not allow safe or ready access, the cost of that access shall not be payable (refer to "Rheem Warranty" on page 7).

- **WATER HEATER LOCATION**
  Water heaters with a galvanised outer casing are only suitable for indoor installations, whereas water heaters with a painted casing are suitable for both indoor and outdoor installations.
  Clearance must be allowed for servicing and removal of the water heater and it must be accessible without the use of a ladder or scaffold. (Typical clearances are: TPR valve removal 135 mm, Element Cover and Element Removal 400 mm). Also, you must be able to read the information on the rating plate and if possible, leave headroom of one water heater length so the anode can be inspected or replaced.
- **CONNECTION SIZES**
  - Hot and Cold water connections: RP *¾ / 20.*
  - Relief valve connection: RP ½ / 15.
- **INLET/OUTLET CONNECTIONS**
  A union must always be provided at the cold water inlet and hot water outlet for disconnection reasons. All connection sockets on the water heater are parallel threaded and therefore tapered brass nipples must be used to ensure watertight connections. Both connections are fitted with plastic liners and it is important that they remain in situ for the water heater to function properly. These liners will be pushed into the correct position as the fitting is being screwed in.
- **NON RETURN VALVE**
  A non return valve must be installed on the cold water line to the water heater.
- **PIPE SIZES**
  The cold water line to the water heater should be the same size or bigger than the hot water line from the water heater. For best results, choose the most suitable pipe size for each individual application.
- **COLD WATER EXPANSION VALVE**
  A cold water expansion valve must be fitted to the cold water line to the water heater.
- **TEMPERATURE AND PRESSURE RELIEF VALVE**
  When fitting the temperature and pressure relief valve, ensure the probe has not been bent. Seal the thread with PTFE tape, or similar, as recommended by the valve manufacturer and screw the valve into the off-centre socket. Do not use a wrench on the valve body – use the spanner flats provided. Drain the TPR valve with a pipe the same size as the valve outlet. The drain must run downwards to a visible point outside the house, preferably over a gully trap.
  In some setups or circumstances, such as if freezing could occur, an air break must be provided in the drain within 300 mm of the TPR valve, refer to the New Zealand Building Code - Clause G12 for requirements and acceptable solutions for the running of hot water drain line(s).



Warning: The drain line from the TPR valve must be in copper. *A Rheem mains pressure water heater must* ***not*** *be installed and operated without a suitable (valve that complies with AS 1357.1) temperature and pressure relief valve. Under no circumstances block the outlet of this valve or its drain pipe.*

- **WATER SUPPLY PRESSURE**
  Maximum permitted mains water pressure - refer product label and Table 5.2 AS/NZS 3500.4. Note inlet pressure control valve is required where maximum permitted mains pressure is likely to be exceeded.
  Minimum inlet pressure: 60 kPa
- **PRESSURE LIMITING/REDUCING VALVE**
  If the water supply pressure exceeds the requirements of Table 5.2 AS/NZS 3500.4, a pressure limiting valve with a maximum setting of 500 kPa is to be fitted in the installation.
- **SAFE TRAY AND SEISMIC RESTRAINTS**
  The water heater must be installed with a properly drained safe tray where there is the possibility of water damage to furniture, carpets or building. All water heaters must be restrained to protect against seismic forces. (Refer to the Zealand Building Code for acceptable solutions.)

ABA20220988
APPROVED - Site Copy
Hastings District Council
20/09/2022

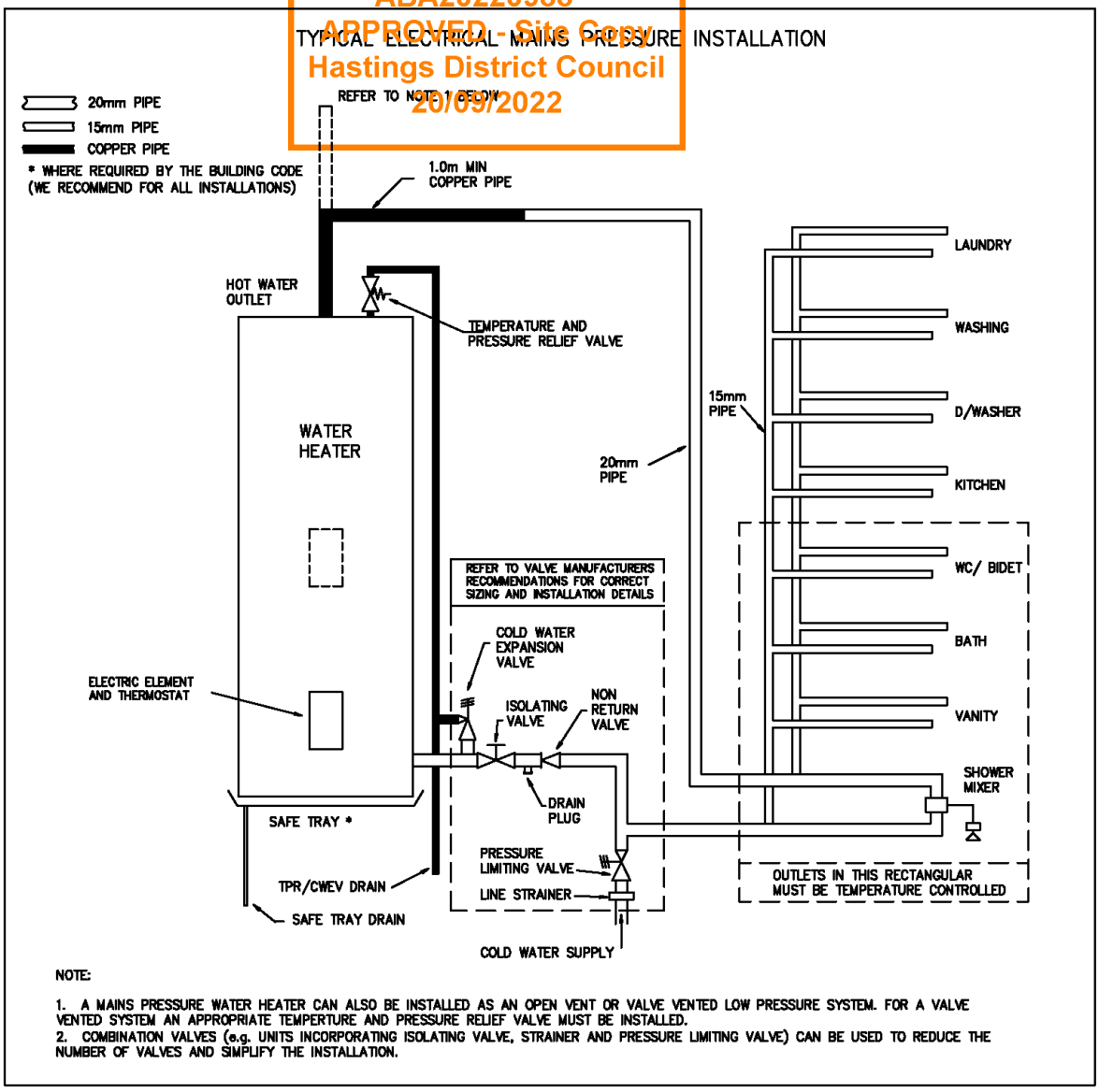

DIAGRAM 2:

CONNECTIONS - ELECTRICAL

The electrical installation must be completed in accordance with AS/NZS 3000. All water heaters are designed for 230 VAC, 50 Hz mains operation and a means of disconnection from the power supply must be incorporated in the fixed wiring during installation.

A flexible 20 mm conduit is required for the electrical cable to the water heater. The conduit is to be connected to the unit with a 20 mm plain to screw adaptor. Connect the power supply wires directly to the terminal block and earth tab connection, ensuring there are no excess wire loops inside the front cover. For details, refer to the wiring diagram on the inside of the element cover. **A separate heating element earth wire is not required because the element earths by the thread of the element boss or the flange being in contact with the element socket.**

COMMISSIONING

TO FILL AND TURN ON THE WATER HEATER

⚠ ***Warning:*** *The power supply to the water heater must not be switched on until the water heater is filled with water and an "earth continuity test", as outlined in Annex A of AS/NZS 60335.1 has been carried out. Failure to do so will damage the element and shorten its life and may create a dangerous situation.*

- Open all of the hot water taps in the house (don't forget the shower). Open the cold water isolation valve fully to the water heater to force the air out of the taps. As water flows freely from each tap, close it. Check the pipe-work for leaks.
- Switch on the electrical supply at the isolating switch to the water heater.

TO TURN OFF THE WATER HEATER

If it is necessary to turn off the water heater on completion of the installation, such as on a building site or where the premises is vacant, then;

- Switch off the electrical supply at the isolating switch to the water heater.
- Close the cold water isolation valve at the inlet to the water heater.

ABA20220988
APPROVED Site Copy
Hastings District Council
20/09/2022

DRAINING THE WATER HEATER

- Switch off the electrical supply at the isolation switch to the water heater.
- Close the cold water isolation valve.
- Operate the relief valve easing lever to release the pressure in the water heater.
- Drain the water heater through the drain valve or plug.
- Undo the top outlet union or operate the relief valve easing lever again to let air into the water heater and allow the water to drain

WHAT YOU SHOULD KNOW ABOUT WATER QUALITY

WATER SUPPLY CHEMISTRY

Water quality can have a detrimental effect on water heater operation, components and life expectancy and may affect the warranty.

⚠ ***Warning****: This water heater must be installed in accordance with advice given to be covered by the Rheem warranty.*

Your Rheem water heater is manufactured to suit the water condition of most local authority water supplies. However, some water supplies can have a detrimental effect on the water heater and its operation and/or life expectancy. This water heater must only be connected to a water supply which complies with these specifications for the Rheem warranty to apply. If you are unsure of your water chemistry you may be able to obtain information from your local water supply authority or you can contact Rheem and we will provide you with contact details of a suitable agency capable of testing your water for compliance with Rheem standards. Water quality tests must be carried out at the owner's cost.

HARSH WATER AREAS

Rheem water heaters are designed for use in areas where the Total Dissolved Solids (TDS) content of the water supply is less than 2500 mg/L.

In areas where the TDS exceeds 600 mg/L it is possible the standard magnesium anode fitted to the water heater, may be excessively active. To alleviate this, the magnesium anode should be replaced with an aluminium anode. Where the TDS of the water is less than 40 mg/L, such as when the water has been deionised or is from an alpine supply, a high potential anode should be used. The changing of anodes must be carried out by a plumber or qualified service person.

CAUTION

If your water supply has a TDS greater than 600 mg/L and the anode has not been changed, there is a possibility of hydrogen gas accumulating in the top of the water heater during long periods of no use.

If, under these conditions, the water heater has not been used for two or more weeks the following procedure should be carried out before using any electrical appliances (e.g. automatic washing machines and dishwashers) which are connected to the hot water supply.

The hydrogen, which is highly flammable, should be vented safely by opening a hot tap and allowing the water to flow. There should be no smoking or naked flames near the tap whilst it is turned on. Any hydrogen gas will be dissipated as indicated by an unusual spurting of the water from the tap. Once the water runs freely again any hydrogen in the system will have been released.

SATURATION INDEX

The saturation index is used as a measure of the water's corrosive or scaling properties. In a scaling water supply calcium carbonate is deposited out of the water onto any hot metallic surface. When scaling water has a saturation index greater than +0.40 an expansion control valve must be fitted on the cold water line after the non-return valve.

Where the saturation index exceeds +0.80, low watts density elements should be used. Where the saturation index is less than -1.0, a corrosive resistant heating unit should be used (contact your local Rheem Service Department or an authorised service person).

Scaling water is water that containing levels of calcium carbonate (total hardness in excess of 200 mg/litre at any time when the water heater is operating) Scaling water can block and prevent the pressure & temperature relief valve from operating, resulting in damage to the water heater storage cylinder and water components. A cold water expansion control valve must be fitted where in all areas with scaling water to assist in preventing blockage of the pressure and temperature relief valve.

⚠ ***Warning:*** *Failure to install an expansion control valve where scaling water conditions occur may result in the water storage cylinder failing or under certain circumstances over pressurising.*

To avoid damage to the storage cylinder and components Rheem strongly recommends scaling water be treated before entering the water heater by fitting appropriate water filters, conditioners, etc – refer to your local water authority for information on water in your area. A build up of white sediment on the hot taps or shower rose can be indicative of scaling water. Contact Rheem if this condition is observed.

ABA20220988
APPROVED - Site Copy
Hastings District Council
20/09/2022

⚠ ***Warning:*** *Damage caused by scaling water can affect the Rheem warranty.*

The Rheem warranty of this water heater will not cover resultant faults on components, including storage tank, due to the effects of sludge and/or sediment as a result of connection to a water supply from silted or untreated sources, i.e. springs, dams, bores, rivers or town supplied from a bore.

WATER HEATERS NOT INSTALLED IN ACCORDANCE WITH THE ABOVE ADVICE WILL NOT BE COVERED BY THE RHEEM WARRANTY.

RHEEM WARRANTY

Mains Pressure Electric Water Heater Product Warranty New Zealand Only

In addition to your legal right, in New Zealand Rheem New Zealand Limited makes the following promise to the owner. We will repair or, if necessary, replace a defective unit or part of it, which has failed due to faulty manufacture on the following terms and conditions:

1. THE RHEEM WARRANTY – GENERAL

1.1 This warranty is given in respect of sales in New Zealand by Rheem New Zealand Limited of 475 Rosebank Road.

1.2 Rheem offer a trained and qualified national service network who will repair or replace components at the address of the unit subject to the terms of the Rheem warranty in New Zealand – contact your Rheem Service Centre on 0800 657 335.

1.3 For details about this warranty, you can contact your Rheem Service Centre in New Zealand on 0800 657 335.

1.4 The terms of this warranty are set out in section 2 and apply to units manufactured after 1st July 2016.

1.5 If a subsequent version of this warranty is published, the terms of that warranty will apply to units manufactured after the date specified in the subsequent version.

2. TERMS OF THE RHEEM WARRANTY AND EXCLUSIONS TO IT

2.1 The decision of whether to repair or replace a faulty component is at Rheem New Zealand Limited's sole discretion.

2.2 Where a failed component or unit is replaced under this warranty, the balance of the original warranty period will remain effective. The replacement does not carry a new Rheem warranty.

2.3 Where the unit is installed outside the boundaries of a metropolitan area, defined by Rheem as further than 25 km from a Rheem service centre, the cost of transport, insurance and travelling between the Rheem service centre and the installed site shall be the owner's responsibility.

2.4 Where the unit is installed in a position that does not allow safe or ready access, the cost of that access, including the cost of additional materials handling and/or safety equipment, shall be the owner's responsibility. In other words, the cost of dismantling or removing cupboards, doors, walls, roofs or trap doors and the cost of any special equipment to bring the unit to floor or ground level or to a serviceable position is not covered by this warranty.

2.5 This warranty only applies to the original and genuine Rheem unit in its original installed location and any genuine Rheem replacement parts. It does not cover any plumbing, gas fitting or electrical parts supplied by the installer, that are not an integral part of the unit, e.g. pipe-work, pressure limiting valve, stop valves, non-return valves, electrical switches, pumps and fuses.

2.6 The Rheem warranty does not cover faults that are a result of:

a) Accidental damage to the unit or any component, for example Acts of God such as floods, storms, fires, lightning strikes and the like and Third party acts or omissions.

b) Misuse or abnormal use of the unit.

c) Installation or use not in accordance with the Owner's Guide and Installation Instructions, New Zealand Building Code requirements or with relevant statutory and local requirements including failure to install a properly drained safe tray where required by the owners guide and installations.

d) Connection at any time to a water supply that does not comply with the water supply guidelines as outlined in the Owner's Guide and Installation Instructions, or poor water quality outside the limits specified in the owners guide and installation instructions.

e) Repairs, attempts to repair or modifications to the unit by a person other than Rheem Service or a Rheem Accredited Service Technician.

f) Faulty plumbing or faulty power supply.

g) Failure to maintain the unit in accordance with the Owner's Guide and Installation Instructions.

h) Transport damage.

i) Fair wear and tear from adverse conditions (for example, corrosion).

j) Cosmetic defects.

2.7 If you require a call out and we find that the fault is not covered by the Rheem warranty, you are responsible for Rheem Service Centre call out costs. If you wish to have the relevant component repaired or replaced by Rheem that service will be at your cost.

2.8 Subject to any statutory provisions to the contrary, this warranty excludes any and all claims however arising including under contract or tort for damage to furniture, carpet, walls, foundations or any other consequential loss or incidental expenses either directly or indirectly due to leakage from Rheem unit, or due to leakage from fittings and/ or pipe work of metal, plastic or other materials caused by water temperature, workmanship or other modes of failure.

2.9 This warranty excludes to the extent permissible all implied warranties set out in the sale of goods act 1908 (New Zealand) and all guarantees set out in the consumers guarantees act 1933 (New Zealand) to the extent that the goods are acquired for the purpose of resupply in trade consumption in the course of a process of production or manufacture or repairing or treating in trade other goods or fixtures on land.

ABA20220988
APPROVED - Site Copy
Hastings District Council
28/09/2022

3. WHAT IS COVERED BY THE RHEEM WARRANTY FOR THE UNITS DETAILED IN THIS DOCUMENT

3.1 The following Warranty terms apply for all Rheem water heaters manufactured after 1st June 2018. Rheem will repair or replace a faulty component of your unit if it fails to operate in accordance with its specifications as follows:

Warranty Cover	**The period from date of installation, in which the fault must appear, in order to be covered**		*Domestic use is defined as; when the appliance is installed in a single family domestic dwelling.
What components are covered	**Domestic use***	**Non-domestic use***	**What coverage you receive**
Low & Mains Pressure	**Years**		**(Excludes Optima)
All components	1	1	Repair or replacement of failed component, or if necessary, replacement of the complete water heater, free of charge, including labour.
Cylinder only (Thermostat setting must be below 70°C)	5	1	Repair or replacement of the complete water heater, free of charge, including labour.
Cylinder only - Vitreous Enamel (Thermostat setting must be below 70°C)	10	3	Repair or replacement of the complete water heater, free of charge. Installation and labour cost are the responsibility of the owner.
Optima	**Years**		
All components	3	1	Repair or replacement of failed component, or if necessary, replacement of the complete water heater, free of charge, including labour.
Cylinder only (Thermostat setting must be below 70°C)	5	1	Repair or replacement of the complete water heater, free of charge, including labour.
Cylinder only (Thermostat setting must be below 70°C)	12	5	Repair or replacement of the complete water heater, free of charge. Installation and labour cost are the responsibility of the owner.

4. ENTITLEMENT TO MAKE A CLAIM UNDER THIS WARRANTY

4.1 To be entitled to make a claim under this warranty you need to:

a) Be the owner of the unit or have consent of the owner to act on their behalf.

b) Contact Rheem New Zealand Limited Service Department without undue delay after detection of the defect and, in any event, within the applicable warranty period.

c) Return the faulty component or unit as directed by the Rheem New Zealand Limited Service Department.

4.2 You are **not** entitled to make a claim under this warranty if your unit:

a) Does not have its original serial numbers or rating labels.

b) Is not installed in New Zealand.

5. HOW TO MAKE A CLAIM UNDER THIS WARRANTY

5.1 If you wish to make a claim under this warranty, you need to:

a) Contact Rheem New Zealand on 0800 657 335 and provide owner's details, address of the unit, a contact number and date of installation of the unit or if that's unavailable, the date of manufacture and serial number (from the rating label on the unit).

b) A Rheem service centre will arrange for the unit to be tested and assessed on-site.

c) If Rheem determines that you have a valid warranty claim, Rheem will repair or replace the unit in accordance with this warranty.

5.2 Any expenses incurred in the making of a claim under this warranty will be borne by you.

RHEEM SERVICE DEPARTMENT
475 Rosebank Road, Avondale, Auckland

www.rheem.co.nz

FOR SERVICE TELEPHONE
Phone: 0800 657 335
Fax: 09 829 0222
or refer to your local Yellow Pages under "Plumbers"
for your nearest Rheem Service Centre

ABA20220988
APPROVED - Site Copy
Hastings District Council
20/09/2022

On-Site Detention Calculator - Version 06

MWH
BUILDING A BETTER WORLD

HASTINGS DISTRICT COUNCIL

A. Site Details

Site Name	Lot 33, 6 Te Ara Matipou, Frimley	
Development Type	Residential	
Total Property Area	470	(m^2)
Proposed Building Roof Area	201.81	(m^2)
Garage Roof Area (Residential)	Nil or in Building Roof Area	(m^2)
Driveway Area (Residential)	16 to 30	(m^2)
Other Paved or Hardstand Areas	1	(m^2)
Impervious %	50%	
Equivalent C Value (5 year)	0.51	
Equivalent C Value (50 year)	0.64	

NO STORAGE REQUIRED

B. Detention Storage Required

Minimum Storage Required	**Nil**	litres
Minimum Roof Area Connected to Storage	**Nil**	(m^2)
Proposed Roof Area to be Connected to Storage		(m^2)

C. Storage Outlet

Restricted Flow Rate	Nil	l/s
Storage Depth	1500	(mm)
Outlet Orifice Size	**Nil**	(mm)

NO STORAGE REQUIRED

ABA20220988
APPROVED - Site Copy
Hastings District Council
20/09/2022

09/2011

STUD TO TOP PLATE FIXING SCHEDULE
ALTERNATIVE TO TABLE 8.18 NZS 3604:2011

NOTE:

- ★ All fixings are designed to resist vertical loads only. Dead loads include the roof weight and standard ceiling weight of 0.20 kPa.
- ★ Refer to Table 8.19 NZS 3604:2011 for nailing schedule to resist lateral loads.
- ★ These fixings assume the correct choice of rafter/truss to top plate connections have been made.
- ★ Gable end wall top plate/stud connections where the adjacent rafter/truss is located within 1200mm of gable end wall with a maximum verge overhang of 750mm, requires fixing type A as shown below.
- ★ All fixings assume top plate thickness of 45mm maximum.
- ★ Wall framing arrangements under girder trusses are not covered in this schedule.
- ★ All timber selections are as per NZS 3604:2011.

LOADED DIMENSION DEFINITION

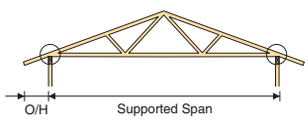

External wall
Standard truss

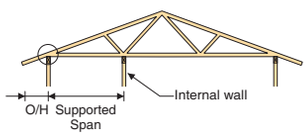

External wall
Internally supported truss

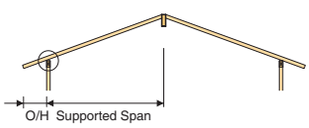

External wall
Rafter roof

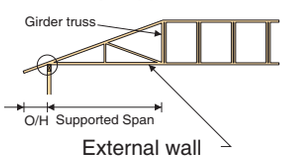

External wall
Jack truss

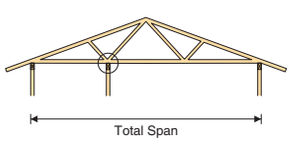

Internal wall
Internally supported truss
(overhang dimension does not apply)

EXTERNAL WALL
LOADED DIMENSION =
$\frac{\text{SUPPORTED SPAN}}{2}$ + O/H

INTERNAL WALL
LOADED DIMENSION =
$\frac{\text{TOTAL SPAN}}{2}$

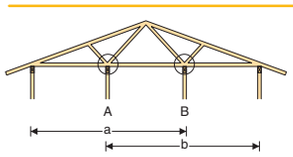

Multiple internal walls
(overhang dimension does not apply)

MULTIPLE INTERNAL WALL
LOADED DIMENSION FOR
WALL A = $\frac{a}{2}$
WALL B = $\frac{b}{2}$

FIXING SELECTION CHART

(Suitable for walls supporting roof members at 600, 900 or 1200mm crs.)

Wind Zones L, M, H, VH, EH, as per NZS 3604:2011

Loaded Dimension (m) Stud Centres			Light Roof Wind Zone					Heavy Roof Wind Zone				
300mm	400mm	600mm	L	M	H	VH	EH	L	M	H	VH	EH
3.0	2.3	1.5	A	A	B	B	B	A	A	B	B	B
4.0	3.0	2.0	A	A	B	B	B	A	A	B	B	B
5.0	3.8	2.5	A	B	B	B	B	A	A	B	B	B
6.0	4.5	3.0	A	B	B	B	B	A	A	B	B	B
7.0	5.3	3.5	A	B	B	B	B	A	A	B	B	B
8.0	6.0	4.0	A	B	B	B	B	A	A	B	B	B
9.0	6.8	4.5	B	B	B	B	B	A	A	B	B	B
10.0	7.5	5.0	B	B	B	B	B	A	A	B	B	B
11.0	8.3	5.5	B	B	B	B	B	A	A	B	B	B
12.0	9.0	6.0	B	B	B	B	B	A	A	B	B	B

FIXING OPTIONS

FIXING TYPE A
0.7 kN

2 x 90mm x 3.15 dia. plain steel wire nails driven vertically into stud.

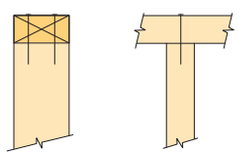

FIXING TYPE B
4.7 kN

CHOOSE ANY OF THE 3 OPTIONS BELOW

2 x 90mm x 3.15 dia. plain steel wire nails driven vertically into stud.

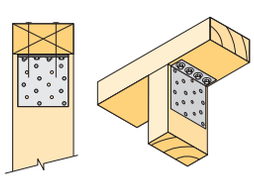

Plus
LUMBERLOK
6kN Stud Anchor
(CPC80)

2 x 90mm x 3.15 dia. plain steel wire nails driven vertically into stud.

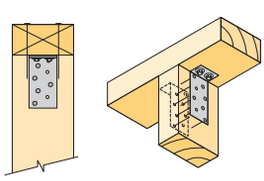

Plus
2 x LUMBERLOK
CPC40

Recommended for internal wall options to avoid lining issues

2 x 90mm x 3.15 dia. plain steel wire nails driven vertically into stud.

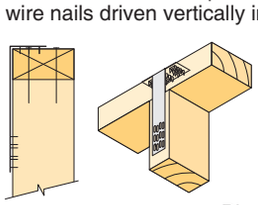

Plus
LUMBERLOK
Stud Strap
(one face only)

Note:
To calculate the number of B type fixings required, divide the wall length by the stud centres, add 1 to this figure and locate this number of fixings as evenly as possible along the wall length. This figure includes the start and end studs in each wall length.

MiTek New Zealand Limited

AUCKLAND
PO Box 58-014, Botany 2163
Phone: 09-274 7109
Fax: 09-274 7100

CHRISTCHURCH
PO Box 8387, Riccarton 8440
Phone: 03-348 8691
Fax: 03-348 0314

www.miteknz.co.nz

GANG-NAIL® LUMBERLOK® BOWMAC®

© Copyright 2011 MiTek Holdings, Inc.
All rights reserved.

ABA20220988
APPROVED - Site Copy
Hastings District Council
20/09/2022

CLASSIC Tile (Figure 4)

[All Dimensions Nominal]

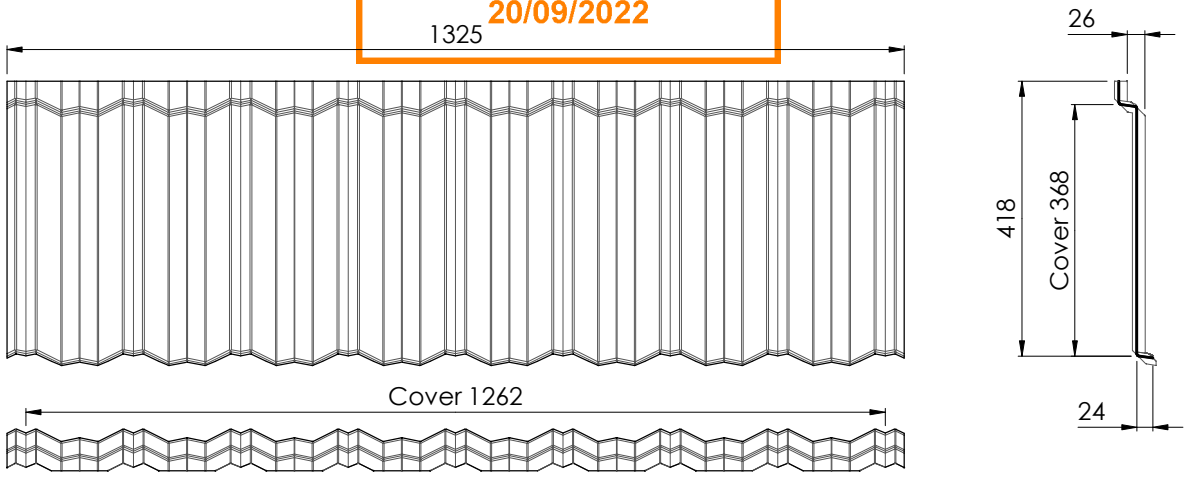

Figure 4.1 Tile Dimensions

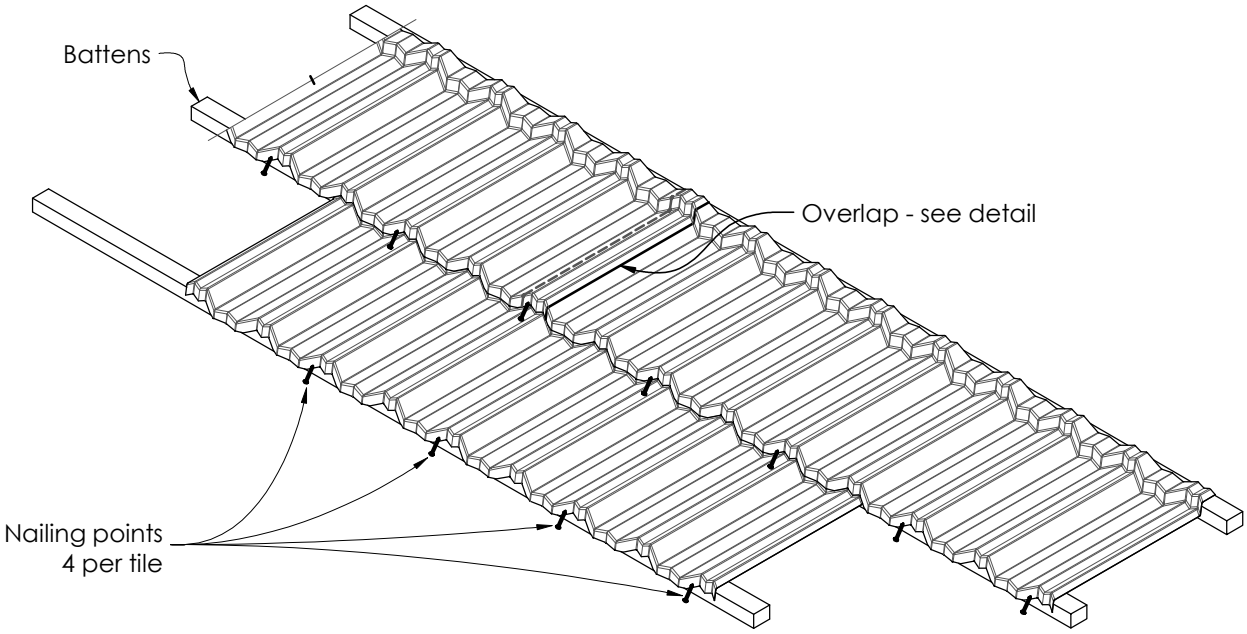

Figure 4.2 Nailing Detail

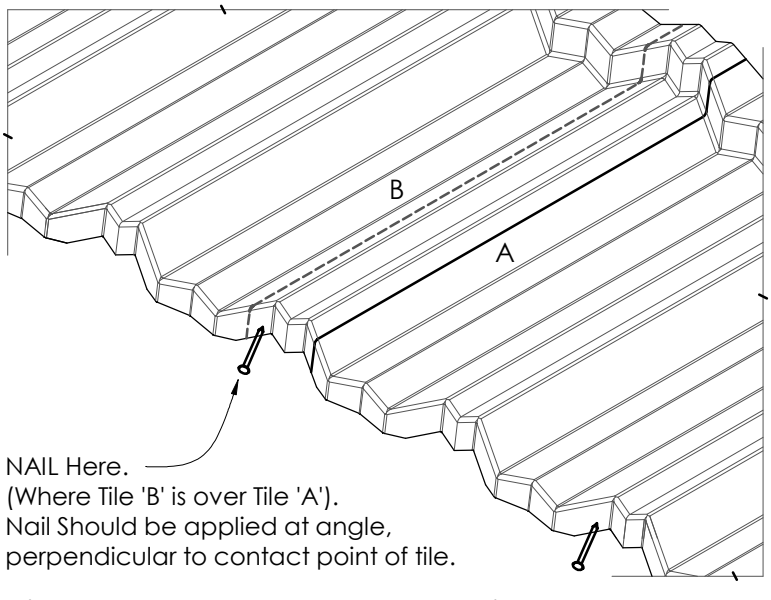

Figure 4.3 Overlap Detail

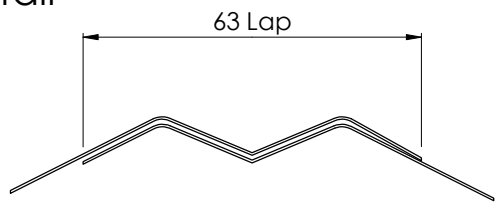

Figure 4.4 Lap Section

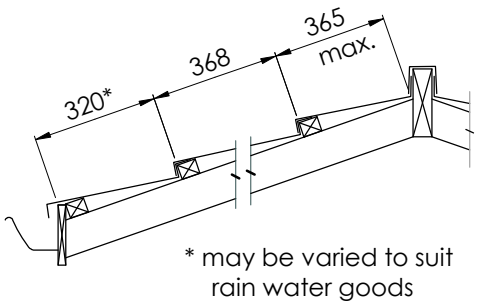

Figure 4.5 Batten Layout

ABA20220988
APPROVED - Site Copy
Hastings District Council
20/09/2022

Thermakraft

CI/SfB

JUNE 2010

THERMAKRAFT 215 BITUMINOUS SELF SUPPORTING ROOFING UNDERLAY

APPLICATION AND INSTALLATION

Product Description

THERMAKRAFT 215 BITUMINOUS SELF SUPPORTING ROOFING UNDERLAY is specifically designed for use in Domestic and Commercial type buildings.

THERMAKRAFT 215 is a breathable, absorbent bituminous wall and roofing underlay.

THERMAKRAFT 215 will provide the following functions:

- Reduce wind entry into the cavity, thereby assisting the performance of thermal insulation.
- Highly water vapour permeable, thereby allowing excess water vapour which might otherwise condense in the structure, to escape.
- Provides a temporary protection against wind, dust, rain and other weathering elements until the external cladding is applied.

Applications

THERMAKRAFT 215 is suitable as a wall and roofing underlay where Fire Retardancy is **NOT** required, and with all cladding types.

THERMAKRAFT 215 is self supporting to 1200mm rafter/purlin spacing.

THERMAKRAFT 215 can be used as an Air Barrier.

THERMAKRAFT 215 must not be left exposed to the elements for more than 7 days. Cladding on the same day is recommended. If Fire Retardancy (FI <5) is required, use **Thermakraft** COVERTEK 407.

Installation Roofing

THERMAKRAFT 215 may be run vertically over purlins with a 150mm lap if roof pitch >8 degrees. Fix securely to purlins with 8mm staples or 20mm clouts. The membrane should be firmly laid to avoid excessive dishing between purlins.

THERMAKRAFT 215 may be run horizontally across rafter/trusses with a 150mm lap for roof pitches above 3 degrees. Fix securely with 8mm staples or 20mm clouts.

Control of Condensation

In climatic regions where condensation risks are high, such as cold or high humidity areas,care needs to be taken in specifying the correct design and installation to prevent moisture build-up in the roof cavities. Factors which adversely affect the condensation risk in roofing systems include;

- Humid, and/or cold climatic regions
- Warm/Skillion roof construction
- Low roof cavity air volume and restricted air movement
- Omitting Vapour Control Layers
- Ceiling penetrations and entry of warm air into roof cavities
- Occupancy activities which have high moisture loading on conditioned spaces
- Low pitched roof
- Bulk insulation
- Building structures ability to naturally dry Construction Moisture

Skillion and Warm Roof Construction are particularly sensitive to moisture accumulation and the design and installation of roof construction needs to take into account the higher condensation risks. Refer MRM Code of Practice for details.

Storage

THERMAKRAFT 215 should be stood on end in dry conditions.
Protect from the weather and direct sunlight.

Roll Dimensions

1250mm x 40.0m = 50m² 20kg
1250mm x 20.0m = 25m² 10kg (2 per pack)
1450mm x 34.5m = 50m² 20kg

For more information regarding **Thermakraft** COVERTEK 407 **FIRE RETARDANT SELF SUPPORTING ABSORBENT BREATHABLE SYNTHETIC NON WOVEN ROOFING UNDERLAY** refer to the "DESIGNER and USER GUIDELINES" - Direct and Cavity Fix, or contact **Thermakraft Customer Services** on **0800 806 595.**

E. & O. E.

ABA20220988
APPROVED - Site Copy
Hastings District Council
20/09/2022

Thermakraft

CI/SfB

JUNE 2010

THERMAKRAFT 215 BITUMINOUS SELF SUPPORTING ROOFING UNDERLAY

TECHNICAL SPECIFICATIONS

Technical Data

THERMAKRAFT 215 BITUMINOUS SELF SUPPORTING ROOFING UNDERLAY complies with the requirements of NZBC E2/AS1 Table 23.

Nominal Grammage 400g/m2

NZBC E2/AS1 TABLE 23 AS A WALL UNDERLAY REQUIREMENTS		
NZBC E2/AS1 TABLE 23 WALL UNDERLAY PROPERTIES	**PROPERTY PERFORMANCE REQUIREMENTS**	**PROPERTY PERFORMANCE**
Absorbency	≥100 gsm	Pass
Vapour Resistance	≤7 MN.s/g	Pass
pH of Extract	≥6 and ≤9	Pass
Shrinkage	≤0.5%	Pass
Water Resistance	≥100mm	Pass
Air Barrier	≥0.1 MN.s/m^3	Pass
Duty		Heavy

NZS2295:2206 Classification		
Flammability Index		**Non Fire Retardant**
Wind Zone	R2	Up to Very High
NZS2295:2006 Classification	R2	Self Supporting

Durability/Limitations

For **THERMAKRAFT 215** to meet the Performance Requirements of NZBC Clause B2, Durability B2.3.1(a) 50 years and B2.3.1(b) 15 years, E2 External Moisture,

THERMAKRAFT 215:

- must be installed in accordance to the "APPLICATION and INSTALLATION GUIDELINES",
- run length no greater than 10 metres,
- is not left exposed for more than (7 days) roof,
- when used on LOSP treated timber, the timber must be free of solvent,
- installed by a licensed building practitioner,
- installed in accordance with the Roofing Code of Practice.

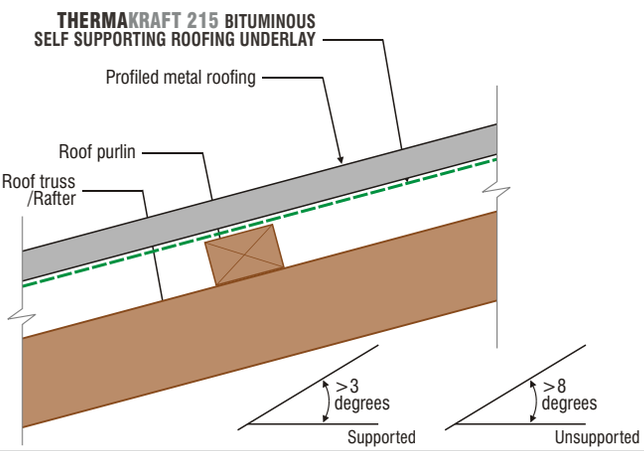

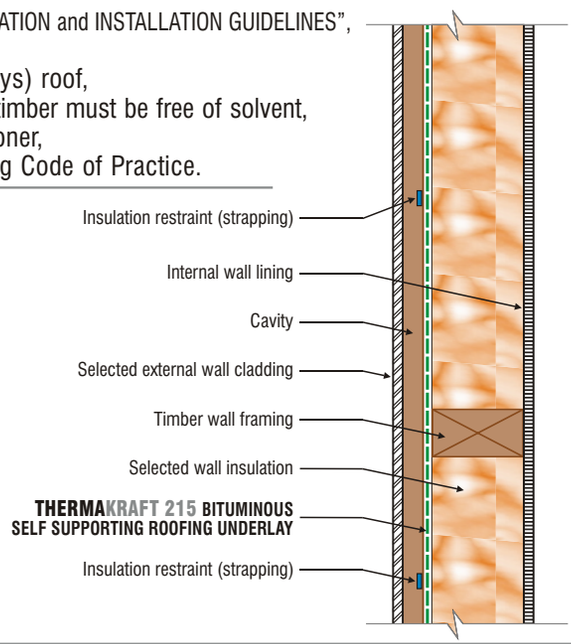

The recommendations contained in **Thermakraft's** literature are based on good building practice, but are not an exhaustive statement of all relevant information and are subject to any conditions contained in the Warranty. All product dimensions and performance claims are subject to any variation caused by normal manufacturing process and tolerances. Furthermore, as the successful performance of the relevant system depends on numerous factors outside the control of **Thermakraft** (for example quality of workmanship and design), **Thermakraft** shall not be liable for the recommendations in that literature and the performance of **the Product**, including its suitability for any purpose or ability to satisfy the relevant provisions of the Building Code, regulations and standards.

Thermakraft Industries (NZ) Ltd

11 Turin Place, East Tamaki, Auckland, New Zealand
PO Box 58-112, Botany, Manukau 2163, New Zealand
Phone: 09-273 3727 Fax: 09-273 3726 Free Phone: 0800 806 595
Email: sales@thermakraft.co.nz Website: www.thermakraft.co.nz

E. & O. E.

ABA20220988
APPROVED - Site Copy
Hastings District Council
20/09/2022

STUD TO TOP PLATE FIXING SCHEDULE

(ALTERNATIVE TO NZS 3604:1999 TABLE 8.18)

NOTE:

- ★ All fixings are designed for vertical loads only. Dead loads include the roof weight and standard ceiling weight of 0.20kPa. Refer to table 8.19, NZS3604:1999 for nailing schedule to resist horizontal loads.
- ★ These fixings assume the correct choice of rafter/truss to top plate connections have been made. Refer to the **LUMBERLOK®** Truss Fixing Chart.
- ★ Gable end wall top plate/stud connections require only 2x90x3.33 nails driven vertically into stud through top plate.
- ★ All Fixings assume top plate thickness of 45mm maximum.
- ★ Wall framing arrangements under girder trusses are not covered in this schedule.

LOADED DIMENSION DEFINITION

Standard truss



Internally supported truss

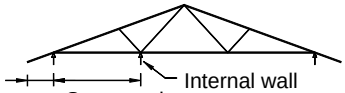

Rafter Roof

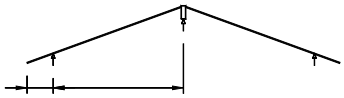

Jack Truss

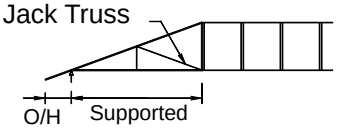

$$\text{LOADED DIMENSION} = \frac{\text{SUPPORTED SPAN}}{2} + \text{OVERHANG}$$

SELECTION CHART FOR FIXING LOADS - TOP PLATE TO STUD

Loaded Dimension	Light Roof Wind Zone				Heavy Roof Wind Zone			
	L	M	H	VH	L	M	H	VH
1.5	A	A	B	B	A	A	B	B
2.0	A	B	B	C	A	A	B	B
2.5	A	B	C	C	A	A	B	C
3.0	B	B	C	D	A	A	B	C
3.5	B	B	C	D	A	A	B	D
4.0	B	C	D	D	A	A	C	D
4.5	B	C	D	D	A	B	C	D
5.0	B	C	D	D	A	B	C	D
5.5	B	C	D	D	A	B	C	D
6.0	B	C	D	-	A	B	D	D

- All studs at 600 crs.
- For studs at 400 crs decrease loaded dimension by 33%.
- All trusses at 900 crs.
- For trusses at 1200 crs increase loaded dimension by 33%.

FIXING OPTIONS

FIXING TYPE A 0.7kN

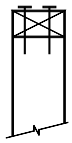

2/90x3.33 plain steel wire nails driven vertically into stud.

FIXING TYPE B 1.7kN

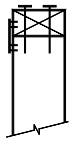

2/90x3.33 plain steel wire nails driven vertically into stud, plus single **TYLOK 2T4** plate.

FIXING TYPE C 2.7kN

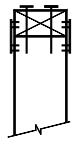

2/90x3.33 plain steel wire nails driven vertically into stud, plus pair **TYLOK 2T4** plates.

FIXING TYPE D 6.0kN

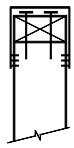

2/90x3.33 plain steel wire nails driven vertically into stud, plus **TYLOK Stud tie**.
OR
Sheet brace strap 400 with 6/30x3.15 nails each stud face.

OR

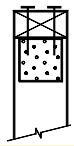

2/90x3.33 plain steel wire nails driven vertically into stud, plus **6kN Stud Anchor.**

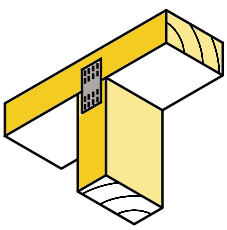

TYLOK 2T4

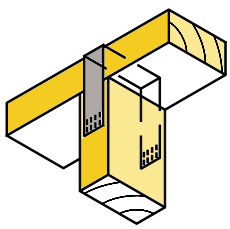

TYLOK STUD TIE OR SHEET BRACE STRAP 400

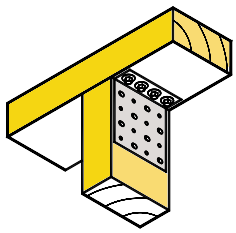

6kN STUD ANCHOR

MiTek™
HOME OF **GANG-NAIL®** BUILDING SYSTEMS

MiTek New Zealand Ltd.

AUCKLAND
PO Box 58-014, Greenmount
Phone: (09) 274 7109
Fax: (09) 274 7100

CHRISTCHURCH
PO Box 8387, Riccarton
Phone: (03) 348 8691
Fax: (03) 348 0314

www.miteknz.co.nz

Copyright reserved by **MiTek New Zealand Ltd.**

ABA20220988
APPROVED - Site Copy
Hastings District Council
20/09/2022

LINTEL FIXING SCHEDULE

(ALTERNATIVE TO NZS 3604:1999 TABLE 8.14 & FIGURE 8.12)

DEFINITIONS

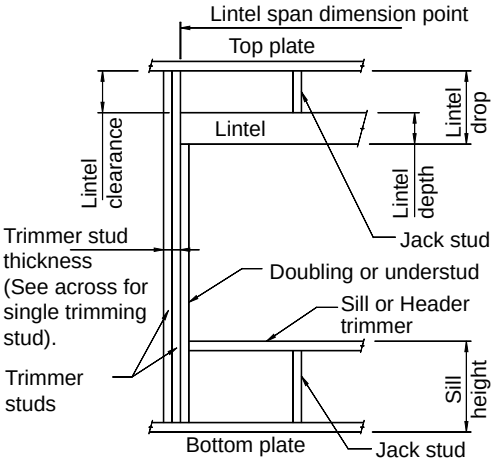

SELECTION CHART FOR LINTEL FIXING

Lintel Span	Loaded Dimension *See reverse side	Light Roof Wind Zone				Heavy Roof Wind Zone			
		L	M	H	VH	L	M	H	VH
1.5	2.0	A	A	B	B	A	A	B	B
	3.0	A	B	B	C	A	A	B	B
	4.0	A	B	C	C	A	A	B	C
	5.0	B	B	C	C	A	A	C	C
	6.0	B	B	C	D	A	A	C	C
2.0	2.0	A	B	B	C	A	A	B	B
	3.0	A	B	C	C	A	A	B	C
	4.0	B	B	C	C	A	A	C	C
	5.0	B	C	C	D	A	A	C	C
	6.0	B	C	C	D	A	B	C	D
2.4	2.0	A	B	B	C	A	A	B	B
	3.0	B	B	C	C	A	A	C	C
	4.0	B	C	C	D	A	A	C	C
	5.0	B	C	C	D	A	B	C	D
	6.0	B	C	D	D	A	B	C	D
3.0	2.0	A	B	C	C	A	A	B	C
	3.0	B	B	C	D	A	A	C	C
	4.0	B	C	C	D	A	B	C	D
	5.0	B	C	D	D	A	B	C	D
	6.0	C	C	D	-	A	B	D	D
3.6	2.0	B	B	C	C	A	A	B	C
	3.0	B	C	C	D	A	B	C	C
	4.0	B	C	D	D	A	B	C	D
	5.0	C	C	D	-	A	B	D	D
	6.0	C	D	D	-	A	B	D	-
4.2	2.0	B	B	C	C	A	A	C	C
	3.0	B	C	D	D	A	B	C	D
	4.0	C	C	D	-	A	B	D	D
	5.0	C	D	D	-	A	B	D	-
	6.0	C	D	-	-	A	C	D	-
4.8	2.0	B	C	C	D	A	A	C	C
	3.0	B	C	D	D	A	B	C	D
	4.0	C	C	D	-	A	B	D	D
	5.0	C	D	-	-	A	B	D	-
	6.0	C	D	-	-	A	C	D	-

NOTES:

- ★ Lintels accepting Girder trusses for ALL load cases use:
  Fixing type C where contributary area = 10m²
  Fixing type D where contributary area = 20m²
- ★ All cases outside this require specific design

LINTEL FIXING TYPES

TYPE A
1.4kN

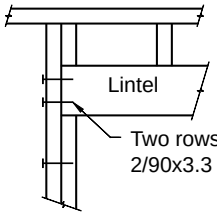

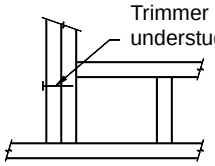

"All other nailing as Table 8.19"

TYPE B
4.0kN

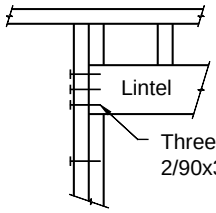

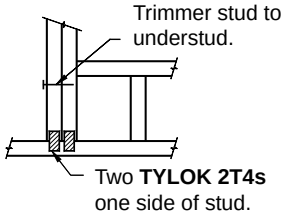

"All other nailing as Table 8.19"

Fixing of jack stud to lintel & top plate, as per top plate schedule, see reverse side.

TYPE C
7.5kN

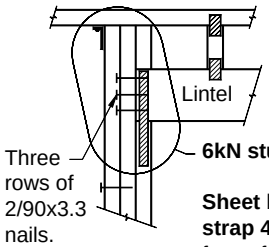

"All other nailing as Table 8.19"

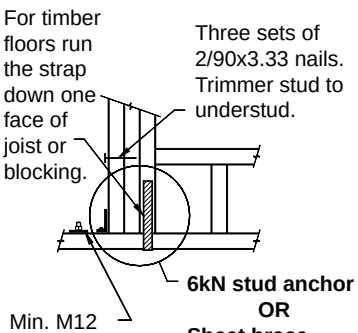

TYPE D
13.5kN

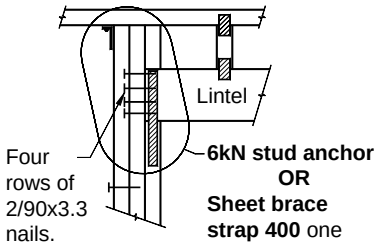

"All other nailing as Table 8.19"

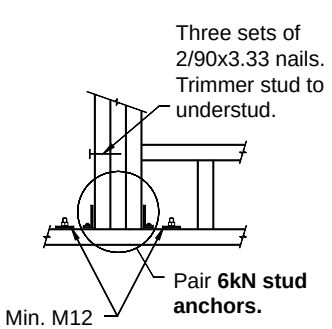

MiTek New Zealand Ltd.
AUCKLAND
PO Box 58-014, Greenmount
Phone: (09) 274 7109
Fax: (09) 274 7100
CHRISTCHURCH
PO Box 8387, Riccarton
Phone: (03) 348 8691
Fax: (03) 348 0314
www.miteknz.co.nz
HOME OF GANG-NAIL® BUILDING SYSTEMS

Copyright reserved by
MiTek New Zealand Ltd.

ABA20220988
APPROVED - Site Copy
Hastings District Council
20/09/2022

BRANZ Appraised
Appraisal No. 372 [2016]

WET-SEAL FIBRECOAT WET AREA WATERPROOFING MEMBRANE

Appraisal No. 372 (2016)

This Appraisal replaces BRANZ Appraisal No. 372 (2000).



BRANZ Appraisals

Technical Assessments of products for building and construction.

Wet-seal New Zealand Ltd
P O Box 33 720
Takapuna
Auckland
Tel: 09 476 5474
Website: www.wet-seal.co.nz

Wet-seal Management Pty Ltd
P O Box 481
Coffs Harbour
NSW 2450
Australia
Tel: +61 2 6650 8600
Fax: +61 2 6650 8699
Email: enquiry@wet-seal.ws

BRANZ
1222 Moonshine Rd,
RD1, Porirua 5381
Private Bag 50 908
Porirua 5240,
New Zealand
Tel: 04 237 1170
branz.co.nz

Product

1.1 Wet-seal Fibrecoat Waterproofing Membrane is a reinforced, liquid-applied, resin based waterproofing membrane for use under ceramic or stone tile finishes in internal wet areas.

Scope

2.1 Wet-seal Fibrecoat Waterproofing Membrane has been appraised for use as a waterproofing membrane for internal wet areas of buildings, within the following scope:

- on floor substrates of concrete, flooring grade particleboard, plywood, compressed fibre cement sheet and fibre cement sheet tile underlay, and on wall substrates of concrete, concrete masonry, wet area fibre cement sheet lining systems and wet area plasterboard lining systems; and,
- when protected from physical damage by ceramic or stone tile finishes; and,
- where floors are designed and constructed such that deflections do not exceed 1/360th of the span.

2.2 The use of Wet-seal Fibrecoat Waterproofing Membrane on concrete slabs where hydrostatic or vapour pressure is present is outside the scope of this Appraisal.

2.3 Building structural movement and control joints in the substrate must be carried through to the tile finish. The design and construction of the substrate and movement and control joints are specific to each building, and therefore the responsibility of the building designer and building contractor and are outside the scope of this Appraisal.

2.4 Ceramic or stone tile finishes are outside the scope of this Appraisal.

2.5 The membranes must be installed by Wet-seal Trained and Approved Applicators.

Building Regulations

New Zealand Building Code (NZBC)

3.1 **In the opinion of BRANZ, Wet-seal Fibrecoat Waterproofing Membrane if designed, used, installed and maintained in accordance with the statements and conditions of this Appraisal, will meet the following provisions of the NZBC:**

Clause B2 DURABILITY: Performance B2.3.1 (b) 15 years. Wet-seal Fibrecoat Waterproofing Membrane meets this requirement. See Paragraph 9.1.

Clause E3 INTERNAL MOISTURE: Performance E3.3.6. Interior wet area floors and walls incorporating Wet-seal Fibrecoat Waterproofing Membrane will meet this requirement. See Paragraphs 11.1-11.7.

Clause F2 HAZARDOUS BUILDING MATERIALS: Performance F2.3.1. Wet-seal Fibrecoat Waterproofing Membrane meets this requirement and will not present a health hazard to people.

Readers are advised to check the validity of this Appraisal by referring to the Valid Appraisals listing on the BRANZ website, or by contacting BRANZ.

ABA20220988
APPROVED - Site Copy
Hastings District Council
20/09/2022

Technical Specification

4.1 Materials supplied by Wet-seal are as follows:

- **Wet-seal Fibrecoat Waterproofing Membrane** – is a fibre glass reinforced, polyester resin based waterproofing membrane. It is coloured amber and supplied in 20 litre pails.
- **Topcoat 300** – is a two-part epoxy topcoat used to complete the Wet-seal Fibrecoat Waterproofing Membrane system. It is supplied as a Part A and B, in 10 litre containers, coloured jade green.

Handling and Storage

5.1 All materials must be stored inside, up off concrete floors, in dry conditions, out of direct sunlight and out of freezing conditions. The membrane products have a shelf life of 12 months from date of manufacture in the original unopened packaging. Once opened, the products must be used within 3 months.

Technical Literature

6.1 Refer to the Appraisals listing on the BRANZ website for details of the current Technical Literature for the Wet-seal Fibrecoat Waterproofing Membrane. The Technical Literature must be read in conjunction with this Appraisal. All aspects of design, use, installation and maintenance contained in the Technical Literature and within the scope of this Appraisal must be followed.

Design Information

General

7.1 Wet-seal Fibrecoat Waterproofing Membrane is for use in buildings where an impervious waterproof membrane is required to floors and walls to prevent damage to building elements and adjoining areas.

7.2 The membrane must be protected from physical damage by the application of ceramic or stone tile finishes.

7.3 Movement and control joints may be required depending on the shape and size of the building or room, and the tile finish specified. Design guidelines can be found in the BRANZ "Good Practice Guide Tiling".

7.4 Timber framing systems must comply with NZS 3604, or where specific engineering design is used, the framing shall be of at least equivalent stiffness to the framing provisions of NZS 3604, or comply with the serviceability criteria of AS/NZS 1170. In all cases framing must be provided so that the maximum span of the substrate as specified by the substrate manufacturer is met and all sheet edges are fully supported. Timber framing systems supporting the substrates must be constructed such that deflections do not exceed 1/360th of the span. Where NZS 3604 is used, the allowable joist spans given in Table 7.1 shall be reduced by 20%.

Substrates

Plywood

8.1 Plywood must be a minimum of 17 mm thick complying with AS/NZS 2269, CD Grade Structural with the sanded C face upwards and treated to H3 (CCA treated). LOSP treated plywood must not be used.

8.2 The plywood must be laid with the face grain at right angles to the floor joists. Joists must be at 400 mm centres maximum and the edges of the sheets must be supported with blocking or framing. The Plywood must be fixed with 10 g x 50 mm stainless steel countersunk head screws at 150 mm centres on the edges and 200 mm through the body of the sheets.

Fibre Cement Compressed Sheet/ Fibre Cement Sheet Tile Underlay

8.3 Fibre cement compressed sheet and tile underlay must be manufactured to comply with the requirements of AS/NZS 2908.2 and must be specified by the manufacturer as being suitable for use as a wet area membrane substrate. Installation must be carried out in accordance with the instructions of the manufacturer.

Readers are advised to check the validity of this Appraisal by referring to the Valid Appraisals listing on the BRANZ website, or by contacting BRANZ.

ABA20220988
APPROVED - Site Copy
Hastings District Council
20/09/2022

Particleboard

8.4 Particleboard must be specified for the end use in accordance with NZS 3602. Installation must be carried out in accordance with the instructions of the manufacturer.

Concrete and Concrete Masonry

8.5 Concrete and concrete masonry substrates must be to a specific engineering design meeting the requirements of the NZBC, such as concrete construction to NZS 3101, concrete slab-on-ground to NZS 3604 or NZS 4229, and concrete masonry to NZS 4229 and NZS 4230.

Wet Area Wall Linings

8.6 Plasterboard wall linings must be manufactured to comply with AS/NZS 2588 and be suitable for use in internal wet areas.

8.7 Fibre cement sheet must be suitable for use in wet areas and comply with AS/NZS 2908.2.

8.8 Installation of plasterboard or fibre cement wall linings must be carried out in accordance with the instructions of the manufacturer.

Durability

Serviceable Life

9.1 The Wet-seal Fibrecoat Waterproofing Membrane, when subjected to normal conditions of environment and use, is expected to have a serviceable life of at least 15 years and be compatible with ceramic or stone tile finishes with a design service life of 15-25 years.

Maintenance

10.1 No maintenance of the membrane will be required provided significant substrate movement does not occur and the tile finish remains intact. Regular checks must be made of the tiled areas to ensure they are sound and will not allow moisture to penetrate. Any cracks or damage must be repaired immediately by repairing the tiles, grouts and sealants.

10.2 In the event of damage to the membrane, the tiling must be removed and the membrane repaired by removing the damaged portion and applying a patch as for new work.

10.3 Drainage outlets must be maintained to operate effectively, and ceramic or stone tile finishes must be kept clean.

Internal Moisture

11.1 Wet-seal Fibrecoat Waterproofing Membrane is impervious to water and when appropriately designed and installed will avoid the likelihood of water penetrating behind linings or entering concealed spaces.

11.2 Wet-seal Fibrecoat Waterproofing Membrane is suitable for use to contain accidental overflow to meet NZBC Clause E3.3.2. A means of Code Compliance for overflow is given in NZBC Acceptable Solution E3/AS1, Paragraph 2.

11.3 Surfaces must be finished with ceramic or stone tile finishes. A means of Code Compliance to NZBC Clause E3.3.3 and E3.3.4 is given in NZBC Acceptable Solution E3/AS1, Paragraph 3.1.1 (b), 3.1.2 (b) and 3.3.1 (b).

11.4 Falls in showers and shower areas must be a minimum of 1 in 50. In unenclosed showers, falls must extend a minimum of 1500 mm out from the shower rose. Floor wastes must be provided and the floor must fall to the outlet.

11.5 The waterproofing membrane must completely cover shower bases, and for unenclosed showers it must extend a minimum of 1500 mm out from the shower rose. Further design guidance on waterproofing wet areas, including waterproofing walls and junctions can be obtained from AS 3740, BRANZ "Good Practice Guide Tiling", and flooring and wallboard manufacturers.

11.6 Where water resistant wall finishes such as prefinished sheet materials are used; they must flash over the membrane a minimum of 30 mm.

11.7 BRANZ recommends the entire floor be covered by a waterproof membrane for bath, shower and spa rooms where timber, plywood or particleboard floors are used. This is also a requirement of particleboard manufacturers.

Readers are advised to check the validity of this Appraisal by referring to the Valid Appraisals listing on the BRANZ website, or by contacting BRANZ.

ABA20220988
APPROVED - Site Copy
Hastings District Council
20/09/2022

Installation Information

Installation Skill Level Requirement

12.1 Installation must always be carried our in accordance with Wet-seal Technical Literature and this Appraisal by, or under the supervision of, a Licensed Building Practitioner (LBP) with the relevant Licence Class.

12.2 Installation and finishing of components and accessories supplied by Wet-seal New Zealand Ltd and its approved applicators must be completed by trained applicators, approved by Wet-seal New Zealand Ltd.

12.3 Installation of the accessories supplied by the building contractor must be carried out in accordance with the Wet-seal Technical Literature and this Appraisal by, or under the supervision of, a Licensed Building Practitioner (LBP) with the relevant Licence Class.

Preparation of Substrates

13.1 Substrates must be dry, clean and stable before installation commences. With surfaces that are even and free from nibs, sharp edges, dust, dirt or other materials such as oil, grease or concrete formwork release agents.

13.2 The relative humidity of the concrete must be 75% or less before membrane application. Concrete substrates can be checked for dryness by using a hygrometer as set out in BRANZ Bulletin No. 585.

13.3 All voids, cracks, holes, joints and excessively rough areas must be filled to achieve an even and uniform surface. Junctions of substrate abutments, such as at wall/floor and wall/wall junctions must have Idrobuild Rinforzo installed as set out in the Technical Literature.

13.4 Substrates when required must be primed with Top Coat 300 primer and allowed to cure before the membrane is installed.

Membrane Installation

14.1 Installation must not be undertaken where the substrate surface temperature is below 5°C or above 35°C.

14.2 Wet-seal Fibrecoat Waterproofing Membrane must be thoroughly stirred and catalyzed before application.

14.3 The fibreglass reinforcement is laid onto the substrate prior to the membrane being applied

14.4 The membrane is applied in one coat over the fibre glass reinforcement at the rates set out in the Technical Literature. The total finished system thickness of the Wet-seal Fibrecoat Waterproofing Membrane must be a minimum of 1.0 mm.

14.5 Application can be made by roller or brush (long bristle).

14.6 Once the resin coat has cured, the Top Coat 300 is applied as per the Technical Literature.

14.7 The Technical Literature should be consulted for the cleanup procedures.

Tiling

15.1 The membrane must be fully cured before tiling. The cured membrane must be protected at all times to prevent mechanical damage, so may require temporary covers until the finishing is completed.

15.2 Tiling must be undertaken in accordance with AS 3958.1 and BRANZ "Good Practice Guide Tiling". The compatibility of the tile adhesive must be confirmed with the adhesive manufacturer or Wet-seal Pty Ltd.

Readers are advised to check the validity of this Appraisal by referring to the Valid Appraisals listing on the BRANZ website, or by contacting BRANZ.

ABA20220988
APPROVED - Site Copy
Hastings District Council
20/09/2022

Inspections

16.1 Critical areas of inspection are:

- Construction of substrates, including crack control and installation of bond breakers and movement control joints.
- Moisture content of the substrate prior to the application of the membrane.
- Acceptance of the substrate by the membrane installer prior to application of the membrane.
- Installation of the membrane to the manufacturer's instructions, particularly installation to the correct thickness and use of reinforcement.
- Membrane curing and integrity prior to the installation of tiles including protection from mechanical damage during curing and prior to tile installation.

Health and Safety

17.1 Safe use and handling procedures for the membranes are provided in the Technical Literature. The materials must be used in conjunction with the relevant Material Safety Data Sheet.

Basis of Appraisal

The following is a summary of the technical investigations carried out:

Tests

18.1 The following testing of Wet-seal Fibrecoat Waterproofing Membrane has been undertaken:

- AS/NZS 4858 Appendix A including effect of heat ageing, bleach, detergent and water on tensile and elongation, water vapour transmission, cyclic movement resistance requirements of AS/NZS 4858: 2004, Appendix B, water absorption, peel adhesion, dry pull-off / tensile adhesive test on plywood, dry pull-off / tensile adhesive test on fibre cement, puncture resistance and low temperature flexibility.

The above test methods and results have been reviewed by BRANZ and found to be satisfactory.

Other Investigations

19.1 An assessment was made of the durability of the Wet-seal Fibrecoat Waterproofing Membrane by BRANZ technical experts.

19.2 Site visits have been carried out by BRANZ to assess the practicability of installation and to examine completed installations.

19.3 The Technical Literature has been examined by BRANZ and found to be satisfactory.

Quality

20.1 The manufacture of the membrane has been examined by BRANZ, and details regarding the quality and composition of the materials used were obtained by BRANZ and found to be satisfactory.

21.1 The quality of supply of the membrane system materials to the market is the responsibility of Wet-seal New Zealand Ltd.

21.2 Quality on site is the responsibility of the Wet-seal Approved and Trained Applicators.

21.3 Designers are responsible for the substrate design, and building contractors are responsible for the quality of construction of substrate systems in accordance with the instructions of the substrate manufacturer, Wet-seal and this Appraisal.

21.4 Building owners are responsible for the maintenance of the tiling or stone finishing systems in accordance with the instructions of Wet-seal.

Readers are advised to check the validity of this Appraisal by referring to the Valid Appraisals listing on the BRANZ website, or by contacting BRANZ.

ABA20220988
APPROVED - Site Copy
Hastings District Council
20/09/2022

Sources of Information

- AS 2908.2: 2000 Cellulose-cement products - flat sheet.
- AS 3740 – 2010 Waterproofing of domestic wet areas.
- AS 3958.1: 2007 Ceramic Tiles - Guide to the installation of ceramic tiles.
- AS/NZS 4858 - 2004 Wet area membranes.
- AS/NZS 1170: Structural Design Actions
- AS/NZS 2269: 2012 Plywood - Structural.
- NZS 3101: 2006 Concrete Structures Standard.
- NZS 3602: 2003 Timber and wood-based products for use in buildings.
- NZS 3604: 2011 Timber framed buildings.
- NZS 4229: 2013 Concrete masonry buildings not requiring specific engineering design.
- NZS 4230: 2004 Design of reinforced concrete masonry structures.
- Ministry of Business, Innovation and Employment Record of Amendments for Compliance Documents and Handbooks.
- The Building Regulations 1992.
- Good Practice Guide Tiling, BRANZ, April 2015.



Readers are advised to check the validity of this Appraisal by referring to the Valid Appraisals listing on the BRANZ website, or by contacting BRANZ.

ABA20220988
APPROVED - Site Copy
Hastings District Council
20/09/2022

BRANZ

In the opinion of BRANZ, the Wet-seal Fibrecoat Wet Area Waterproofing Membrane is fit for purpose and will comply with the Building Code to the extent specified in this Appraisal provided it is used, designed, installed and maintained as set out in this Appraisal.

The Appraisal is issued only to Wet-seal New Zealand Ltd, and is valid until further notice, subject to the Conditions of Appraisal.

Conditions of Appraisal

1. This Appraisal:
   a) relates only to the product as described herein;
   b) must be read, considered and used in full together with the Technical Literature;
   c) does not address any Legislation, Regulations, Codes or Standards, not specifically named herein;
   d) is copyright of BRANZ.
2. Wet-seal New Zealand Ltd:
   a) continues to have the product reviewed by BRANZ;
   b) shall notify BRANZ of any changes in product specification or quality assurance measures prior to the product being marketed;
   c) abides by the BRANZ Appraisals Services Terms and Conditions.
   d) Warrants that the product and the manufacturing process for the product are maintained at or above the standards, levels and quality assessed and found satisfactory by BRANZ pursuant to BRANZ's Appraisal of the product.
3. BRANZ makes no representation or warranty as to:
   a) the nature of individual examples of, batches of, or individual installations of the product, including methods and workmanship;
   b) the presence or absence of any patent or similar rights subsisting in the product or any other product;
   c) any guarantee or warranty offered by Wet-seal New Zealand Ltd.
4. Any reference in this Appraisal to any other publication shall be read as a reference to the version of the publication specified in this Appraisal.
5. BRANZ provides no certification, guarantee, indemnity or warranty, to Wet-seal New Zealand Ltd or any third party.

For BRANZ

Chelydra Percy
Chief Executive

Date of Issue:
01 July 2016

Readers are advised to check the validity of this Appraisal by referring to the Valid Appraisals listing on the BRANZ website, or by contacting BRANZ.

ABA20220988
APPROVED - Site Copy
Hastings District Council
20/09/2022

DECEMBER 2018

+RIBRAFT® X-POD®

INSTALLERS GUIDE



ABA20220988
APPROVED - Site Copy
Hastings District Council
20/09/2022

1		Scope	3
2		Description of the System	3
1 DPM			4
	2.1	Concrete	4
	2.2	Pods	4
	2.3	Mesh	6
	2.4	Steel	6
	2.5	DPM	7
	2.6	Optional Gravel raft	7
	2.7	Firth HotEdge	7
3		Installation of the system	7
	3.1	Site/earth works	7
	3.2	Plumbing	7
	3.2.1	Below Slab Plumbing Installation Methodology.	7
	3.3	In Floor Plumbing Installation methodology.	9
	3.4	Recesses for showers.	11
	3.5	Sub-base/subgrade	12
	3.6	Formwork setup	12
	3.7	DPM placement	12
	3.8	Pod installation	12
	3.9	Reinforcement Placement	13
	3.10	Concrete Placement	13
	3.11	Shrinkage Control Joints	14
	3.11.1	Saw cut joints	14
	3.11.2	Free joints	14
	3.12	Finish expectations	15
4		Installation Documentation	15



RIBRAFT® X-POD®

ABA20220988
APPROVED - Site Copy
Hastings District Council
20/09/2022

1 SCOPE

This installation guide has been developed for the exclusive use of Firth customers who are experienced in the construction of residential concrete foundation systems. The Building Act requires that only suitably qualified persons, who are Licensed Building Practitioners, (LBP) or working under the supervision of a LBP, can construct foundations systems. Experience in the placing finishing and early age care of concrete in accordance with NZS3109 is mandatory.

The RibRaft® X-Pod® foundation is a specifically designed systems and as such all details shall be provided in the project drawings. These drawing will have been reviewed as part of the building consent process. Any errors or omissions should be brought to the designers attention for instruction.

Contact your local Firth Representative for supply of Firth RibRaft® X-Pod®s. Pods shall be released to site upon confirmation of the placement of an order for the appropriate Firth concrete mix code (see section 2.1).

2 DESCRIPTION OF THE SYSTEM

The Firth RibRaft® X-Pod® flooring system comprises of:

- Firth concrete mix IP2019X or IP2519X, refer section 2.1
- A matrix of RibRaft® X-Pod® formers to create typically a total floor thickness of 300mm with ribs at 750 or 1500mm centres and a 85mm minimum topping above the RibRaft® X-Pod®s. Note refer to the project drawings as designers have differing preferences for topping thickness, refer section 2.2
- Firth RibRaft® Keystones which lock the X-Pod®s into place
- Mesh in the topping, refer section 2.3
- Reinforcement typically in the form of DH10s or larger diameter in the ribs, perimeter, and load bearing beams, section 2.4
- DPM providing a vapour barrier between ground and flooring system, section 2.5
- Dependent upon soil conditions the flooring system may sit on a compacted gravel raft, section 2.6
- The system is compatible with Firth HotEdge® should slab edge insulation be specified, section 2.7

FIGURE 1 - THE RIBRAFT® X-POD® SYSTEM

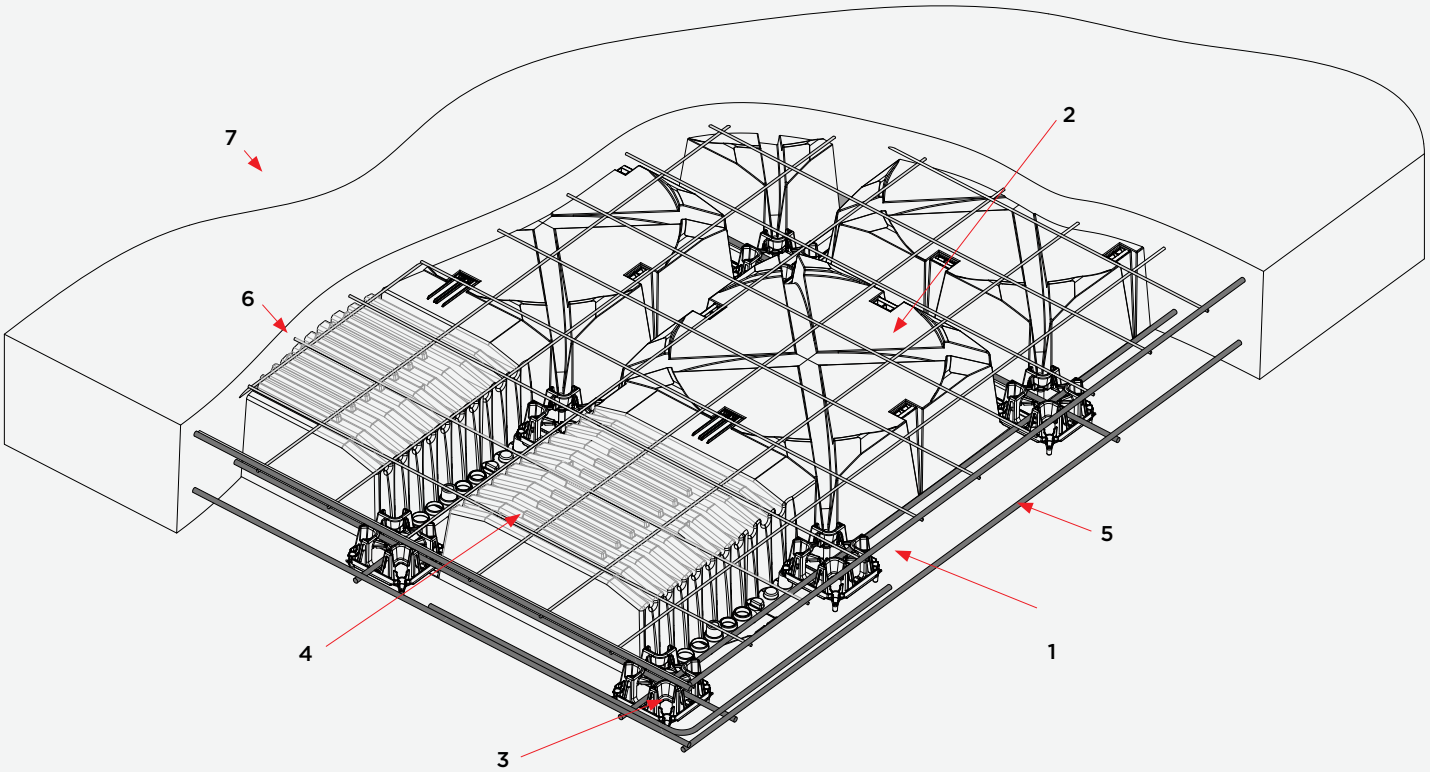

1	DPM
2	RibRaft® X-Pod® (215/750 or 215/1500)
3	RibRaft® Keystone 8/16
4	RibRaft® ADJ Pod (215/150.400 and ADJ Pod 215/450.700)
5	Steel reinforcing (bars)
6	Steel reinforcing (mesh)
7	Firth Concrete (mix code IP2019X or IP2519X)

ABA20220988
APPROVED - Site Copy
Hastings District Council
20/09/2022

2.1 CONCRETE

RibRaft® X-Pod® Foundation systems require a specific Firth designed concrete mix. Choose one of the following:

1 **X-Pod® Mix IP2019X** – a 20MPa 120mm slump mix available as a pump mix suitable for 100mm pump lines available in either a 13mm or more usually a 19mm nominal aggregate size, or as a structural (non-pump) mix

2 **X-Pod® Mix IP2519X** – a 25MPa 120mm slump mix available as a pump mix suitable for 100mm pump lines available in either a 13mm or more usually a 19mm nominal aggregate size, or as a structural (non-pump) mix. This mix shall be specified for buildings constructed in the 'sea spray zone' (i.e. within 500m of the sea including harbours, within 100m of tidal estuaries or inlets, on offshore islands and elsewhere as defined as exposure zone D in 4.2.3.3 of NZS3604).



2.2 PODS

The Firth RibRaft® X-Pod® flooring system comprises of 4 pod options which are linked using the X-Pod® Keystone clip to create an efficient and strong flooring system.

The pod options are:

- **RibRaft® X-Pod® 215/750.** These units, when laid out and linked with the X-Pod® Keystone create a grid with 100mm ribs at 750 centres. The height of the pods are 215mm which when combined with 85mm of concrete topping give a total floor thickness of 300mm. ***See Figure 2.***
- **RibRaft® X-Pod® 215/1500.** These units, when laid and linked with the X-Pod® Keystone create a grid with 100mm ribs at 1500 centres. The units are designed to form a cross shaped concrete column in the centre of the 1500mm rib grid. The height of the pods are 215mm which when combined with 85mm of concrete topping give a total floor thickness of 300mm. ***See Figure 3.***
- **RibRaft® two part adjustment pod. ADJ Pod (215/150.400 and ADJ Pod 215/450.700).** These units can be used when the required spacing between beams and ribs is less than 750mm. The 215/150.400 unit contains a top mounted clip which allows it to be securely connected to other X-Pod® units. Without modification the unit fills a 400mm void. With cutting and overlapping the unit can fill voids of between 150 and 400mm. When combined with the ADJ 215/450.700 unit, voids of between 450 to 700mm can be filled. ***Figure 4 illustrates the units.***

FIGURE 2 - TYPICAL RIBS LAYOUT OBTAINED WITH RIBRAFT® X-POD®S 215/750

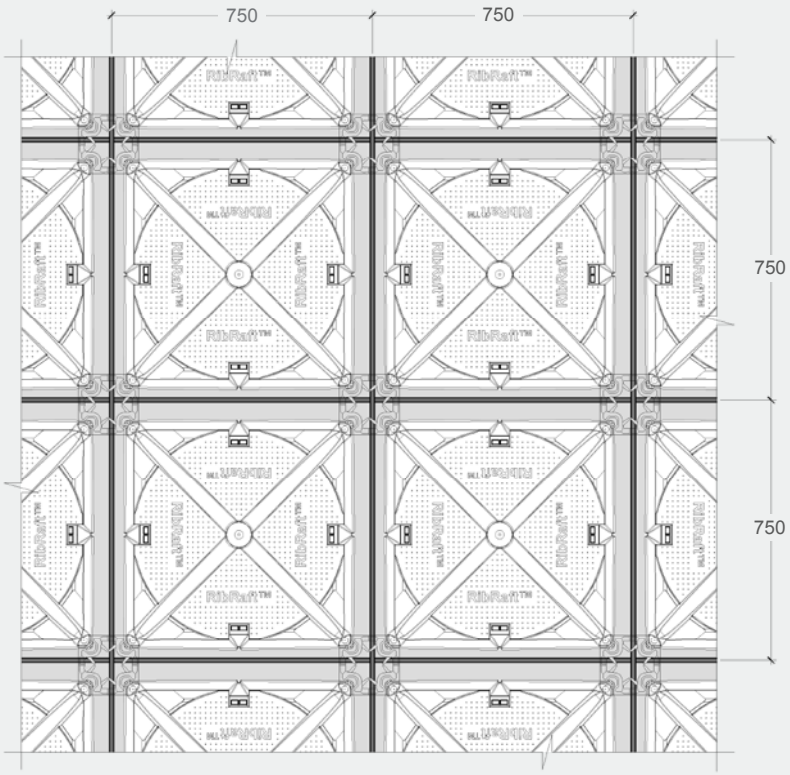

Illustration: © Cresco.co.nz

ABA20220988
APPROVED - Site Copy
Hastings District Council
20/09/2022

FIGURE 3 - TYPICAL RIBS LAYOUT OBTAINED WITH RIBRAFT® X-POD® 215/1500

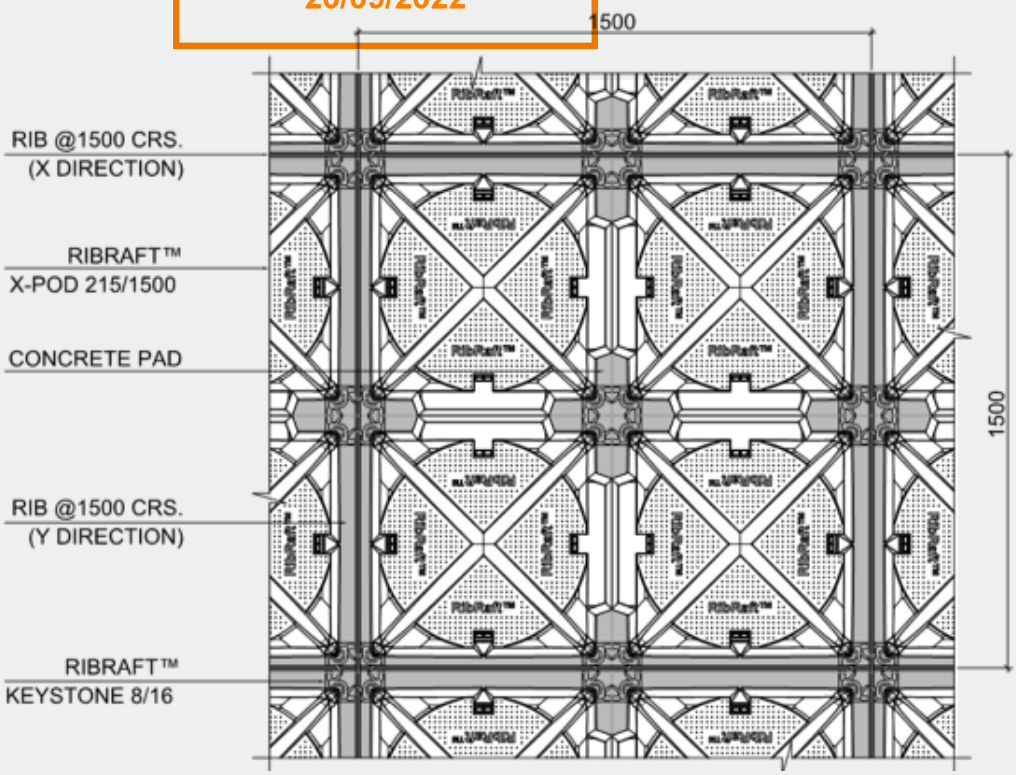

Illustration: © Ribraftdesign.co.nz

FIGURE 4 - RIBRAFT® X-POD® TWO PART ADJUSTMENT PODS

Illustration: © Ribraftdesign.co.nz

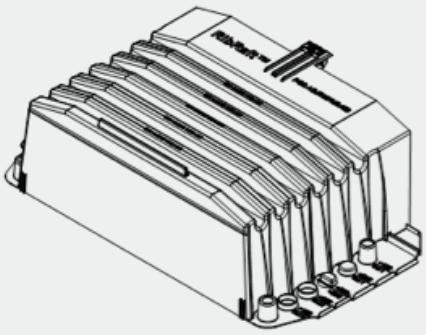

RibRaft® X-Pod® ADJ 215/150.400

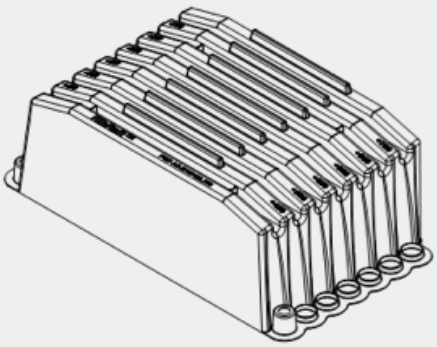

RibRaft® X-Pod® ADJ 215/450.700

Firth RibRaft® X-Pod®s are placed directly on levelled ground and are arranged in such a way as to form a reinforced concrete floor slab with a grid of reinforced concrete ribs and edge beams when concrete is placed onto them. The RibRaft® ADJ Series X-Pod®s may be used to suit specific architecture layout and also to accommodate services.

Figure 5 shows how the various X-Pod® components might be utilised on a complex floor arrangement where liquefaction or expansive soils are not a consideration.

ABA20220988
APPROVED - Site Copy
Hastings District Council
20/09/2022

FIGURE 5 - EXAMPLE OF HOW THE VARIOUS X-POD® COMPONENTS CAN BE UTILISED ON A COMPLEX SHAPED FLOOR

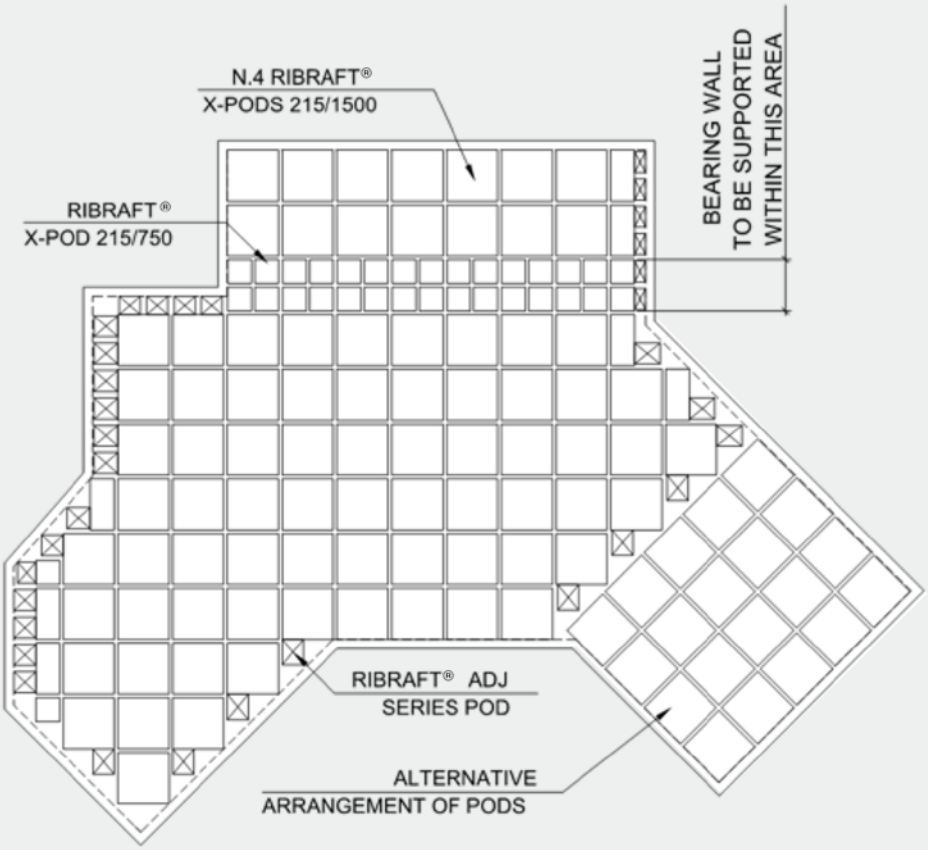

2.3 MESH

Mesh shall be Grade 500 and comply with AS/NZS 4671:2001. Typically the mesh will be 665 mesh (Class L) or SE62 ductile mesh (Class E). The Design Engineer shall specify the required mesh.

Class L mesh can be used when the sole purpose is limitation of crack widths and the ground conditions are defined as good in terms of NZS3604. The Class E reinforcing bars in the ribs and beams provides adequate ductility of the system which allow the use of Class L mesh.

Class E shall be used when the mesh preforms a structural function such as a slab on ground prone to liquefaction or expansive soils.

Mesh shall be lapped in accordance with NZS3101.

Two options are available for supporting the mesh which shall be defined on the drawings:

1 The mesh can be supported on mesh chairs to achieve cover to the top surface of 35mm. This methodology minimises the cover and therefore enhances the crack width limiting ability of the mesh.

2 The mesh can alternatively be laid on upstands provided in the corners of the pods. The 15mm upstands on the pods mean that cover from the concrete surface to the mesh (SE62) is 58mm and slightly less at mesh overlaps.

2.4 STEEL

The reinforcing bars in the ribs and edge beams shall conform to AS/NZS 4671:2001 Grade 500, Class E “Steel Reinforcing Materials”. The volume of reinforcement shall be documented on the approved building consented drawings.

The Firth RibRaft® X-Pod® Keystones hold the reinforcement in positon without the need for tying. The X-Pod® Keystone can accommodate up to two DH16 bars at a lap positon.

ABA20220988
APPROVED - Site Copy
Hastings District Council
20/09/2022

2.5 DPM

The damp proof membrane (DPM) material shall be polyethylene sheet in accordance with NZS 3604:2011. The DPM shall be laid over the entire building platform directly on top of a sand blinding layer, extending to the outside of the edge beam. The joints shall be lapped not less than 50mm and sealed with pressure sensitive tape not less than 50mm wide. All penetrations of the DPM by plumbing and services or punctures during construction shall also be sealed with pressure sensitive tape. The DPM may extend beyond the edge of the slab i.e. underneath the formwork, or may be folded and stapled up the inside of the formwork. The minimum requirement is that the DPM extends to the outside of the edge beam. It is very important that the DPM is not bunched up at the formwork.

Where enhanced thermal performance is required, ThermoX DPM can be used as the DPM.

2.6 OPTIONAL GRAVEL RAFT

Often a gravel raft is not required below the DPM where ground bearing conditions permit, although a sand blinding layer may be required to provide puncture resistance to the DPM. Where ground conditions are soft, a compacted gravel raft can be provided to reduce the bearing pressures in the natural ground to acceptable levels. Details of any gravel raft shall be provided on the project drawings.

2.7 FIRTH HOTEDGE®

Where additional thermal efficiency is required, Firth HotEdge® can be incorporated into the design. Refer Firth web page for more information.



3 INSTALLATION OF THE SYSTEM

The following provides an overview of the installation of the Firth RibRaft® X-Pod® system. Where conflict exists between the information provided in this document and the approved building consent drawing set, the drawings shall take precedence. However, it is mandatory that the concrete used is supplied by Firth Industries to allow management of quality control.

3.1 SITE/EARTH WORKS

The building footprint shall be excavated to a suitable depth to ensure all organic material is removed (top soil, roots etc). Excavation shall extend beyond the footprint a distance shown on the drawings which is typically twice the depth of compacted hardfill beneath the concrete slab. Precautions shall be taken to prevent silt laden runoff from leaving the site should rain occur.

3.2 PLUMBING

Various Territorial Authorities have their own preferences for plumbing details so always check with the local council.

Two options exist for running plumbing:

- The pipes are installed in the ground below the slab and then rise up through the slab at the desired location within the building, referred to as “below slab installation”. This is the preferred option in most situations.
- The pipes run within the plane of the X-Pod® flooring system, referred to as “in floor installation”.

3.2.1 BELOW SLAB PLUMBING INSTALLATION METHODOLOGY

This option is applicable for most situations but should not be used on liquefaction sites for which lateral spread is expected. In most situations this is the norm and most cost effective solution.

For this option, pipes shall be conveyed underground to their plan location then brought up through the X-Pod® and the concrete floor slab. The trenching, placing and bedding of the pipes/ducts and the backfilling shall conform to the requirements of the consent documentation. Services shall not be placed within any concrete except to cross that section of concrete i.e. services shall not run along ribs or edge beams. In accordance with AS/NZS3500.4:2015 pipes penetrating through concrete shall be:

- Installed at right angles to the slab surface
- Lagged with an impermeable material for the full depth of the concrete penetration
- Lagging must be at least 6mm thick

Any services horizontally crossing ribs or the edge beams shall be placed only within the middle third of the member. At no stage shall any of the reinforcement bars be relocated or cut to allow for the services (it is acceptable, however to cut the mesh). In some instances this will dictate the location of the pods.

The X-Pod® ADJ spacers can be used to trim around plumbing penetrations if required.

TYPICAL DETAILS ARE SHOWN BELOW

ABA20220988
APPROVED - Site Copy
Hastings District Council
20/09/2022

Below slab installation showing lagging of pipes

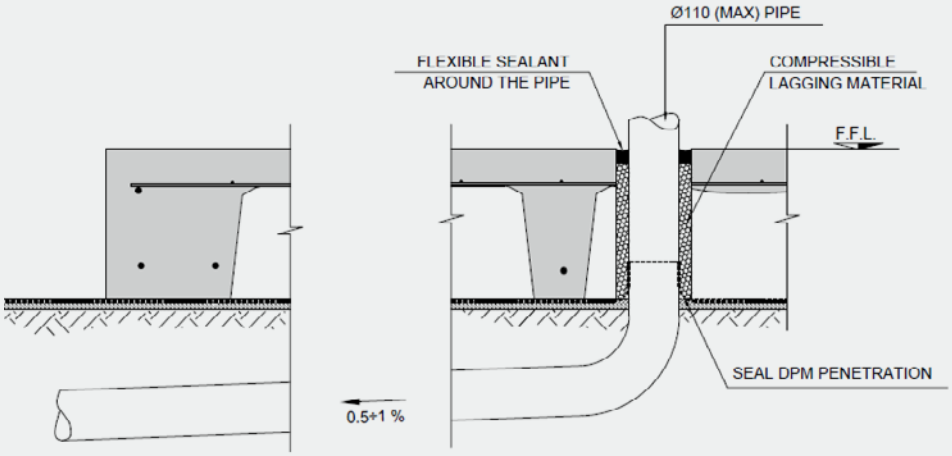

Details where large dimeter pipe required through perimeter beam

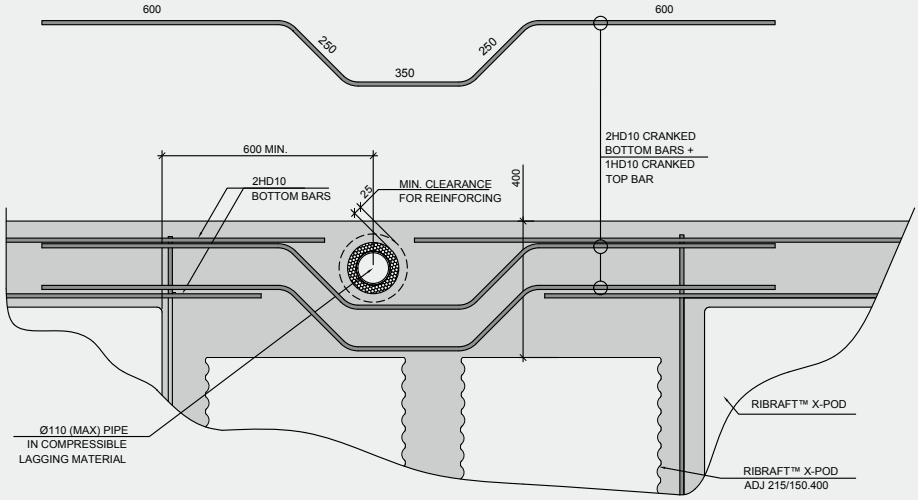

Use of X-Pod® ADJ pods to create zone for pipes to penetrate slab

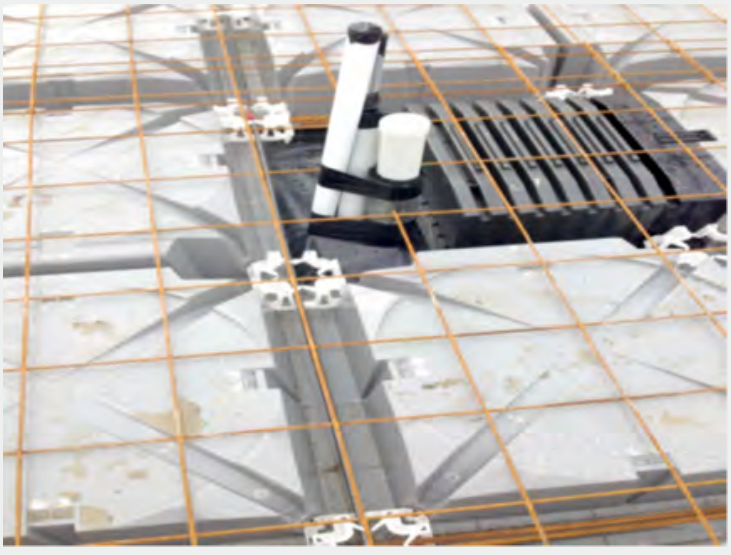

ABA20220988
APPROVED - Site Copy
Hastings District Council
20/09/2022

3.3 IN FLOOR PLUMBING INSTALLATION METHODOLOGY

This is the preferred methodology for sites where lateral spread associated with liquefaction is expected as it provides enhanced protection for the pipes compared to the below slab methodology. However, it can be used for all ground conditions.

Pipes services can be run within the plane of the RibRaft® X-Pod®s either exiting out of the side of the perimeter ring beam or going underground near the edge beam. Pipes shall be laid at a fall to comply with NZBC G13/AS1. For pipe up to 65mm diameter the minimum gradient is typically 1 in 40, while for 100mm pipes its 1 in 60, however greater falls may be required dependent upon the required number of discharge units. Table 1 provides distances from the edge of the slab to pipe surface penetration to achieve minimum pipe gradients. Where gradients cannot be achieved, then services will be required to be run under the slab.

Pipes shall either be:

1. Located to pass perpendicular to the ribs and beams and shall not be laid along the length of ribs or beams. X-Pod®s can be cut and sealed as required to achieve the required fall and position.
2. The adjustable X-Pod® can be used to create beams to run services through. Pipes shall be laid to ensure 15mm concrete cover between pipe and reinforcement in the perimeter beam. The width of the rib containing the pipes shall be greater than the specified rib width (typically 100mm) plus the pipe diameter. This ensures the rib width is maintained even though plumbing pipes run through it. All pipes in contact with concrete shall be lagged with an impermeable material of at least 6mm thickness.

TABLE 1 MAXIMUM DISTANCE FROM EXTERIOR TO ENTRANCE POINT OF PLUMBING PIPES

Pipe Diameter (ID)mm	Gradient	Maximum distance to edge with 215mm thick pod
40	1 in 40	3400
50	1 in 40	3000
65	1 in 40	2400
100	1 in 60	1200

TYPICAL DETAILS ARE SHOWN BELOW

In slab installation pipes cut through rib walls

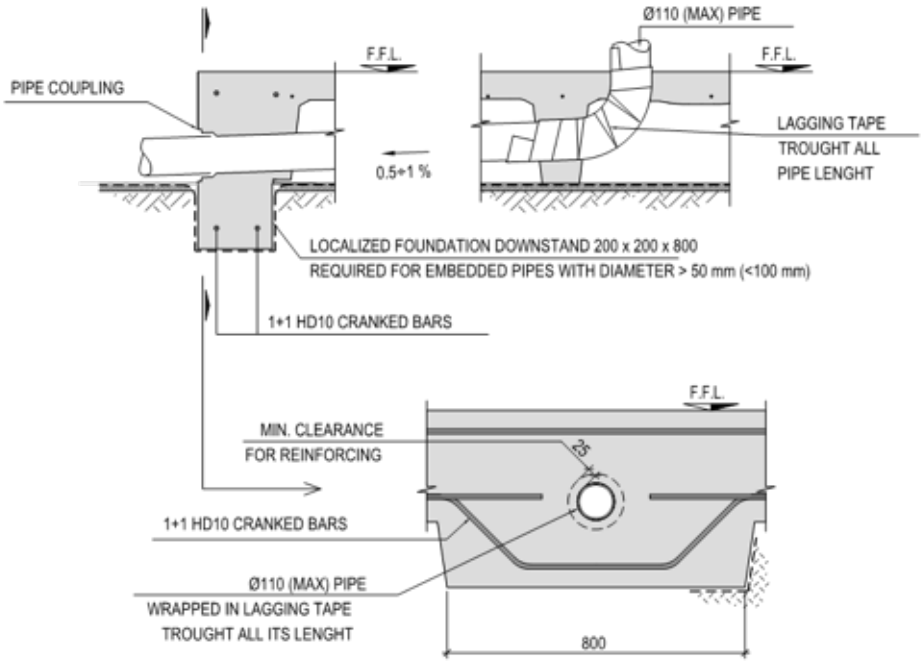

ABA20220988
APPROVED - Site Copy
Hastings District Council
20/09/2022

Use of X-Pod® ADJ pods to create zone for pipes to run without compromising Ribs

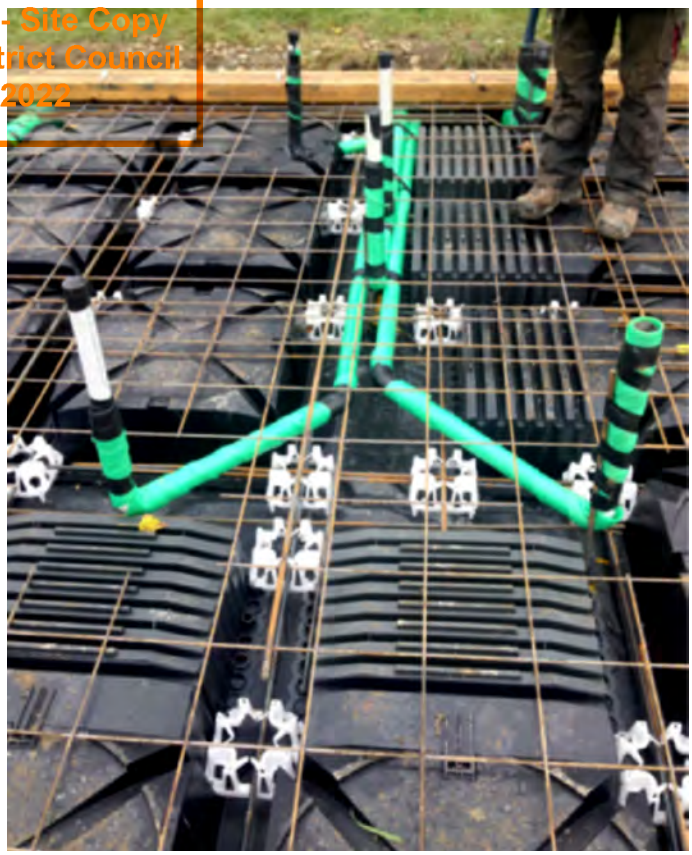

Typical drop down detail for sewer line to prevent it being visible at exterior of slab

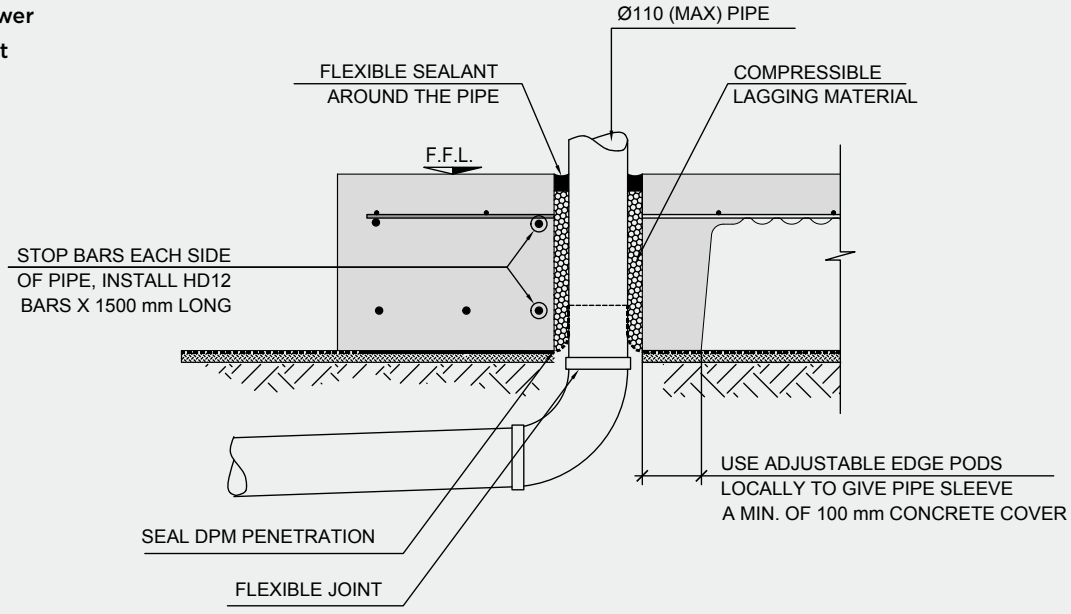

ABA20220988
APPROVED - Site Copy
Hastings District Council
20/09/2022

3.4 RECESSES FOR SHOWERS

The following figures provide typical details for recesses and large penetrations.

Shower recess distant from slab edge

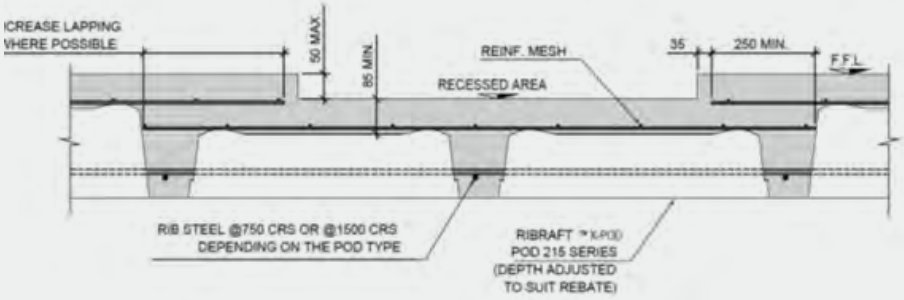

Shower recess close to slab edge

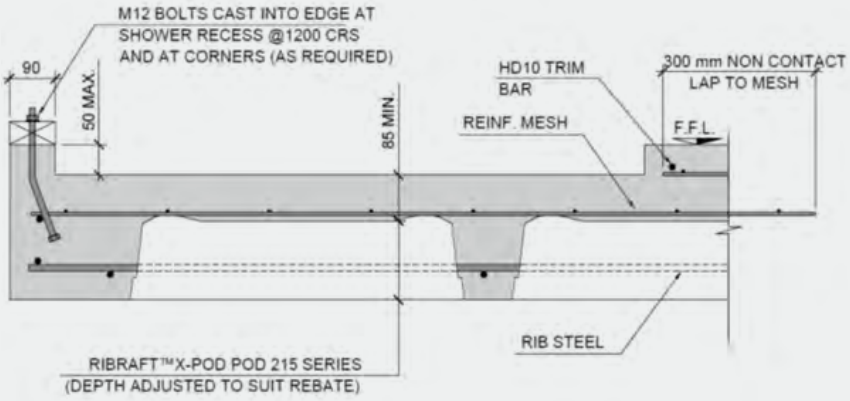

Large penetration through slab

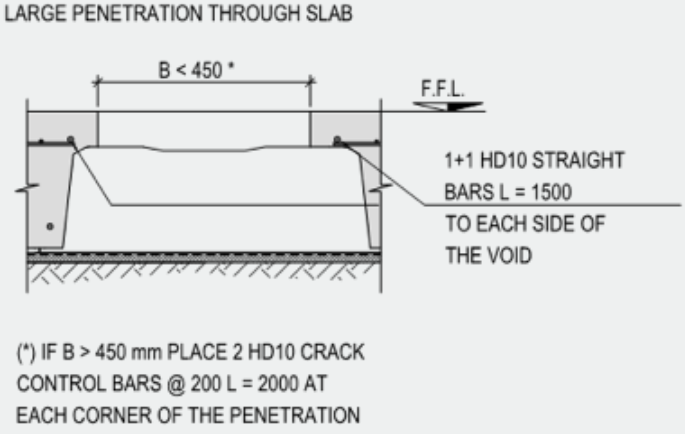

ABA20220988
APPROVED - Site Copy
Hastings District Council
20/09/2022

3.5 SUB-BASE/SUBGRADE

Excavated material shall be replaced with hardfill material compacted in maximum layers of 150mm or as specified by the design engineer. Refer specific project drawings/ specification for minimum hardfill layer under slab. A blinding layer of 0-5 mm sand or crusher dust shall cover base material to a maximum thickness of 25mm (for final hand screeding). The finished level of compacted hardfill shall be determined specifically by the designer for each site. The subgrade/sub-base should be inspected by the design engineer when this is a condition of the building consent, or where concerns exist that the ground conditions are not those implied by the design.

3.6 FORMWORK SETUP

Perimeter shutters shall be set to profiles or string lines with top edge at Finished Floor level. Setting level of shutters must allow for variation across prepared base and final hand screed of sand blinding layer (to +/- 5mm). Shutters shall be adequately braced to ensure minimal movement occurs under full load of wet vibrated concrete and construction loadings. Forms shall prevent the leakage of grout at joints which can result in a bony surface finish.

The finished floor level shall ensure that the height above ground level satisfies the greater requirements of:

- E1/AS1, refer section 2 in particular
- E2/AS1, refer section 9.1 in particular
- any local flood management clearance criteria

The specified levels shall be shown on the project drawings.

3.7 DPM PLACEMENT

The DPM shall be laid over the entire building platform directly on top of a sand blinding layer, extending to the outside of the edge beam. The joints shall be lapped not less than 50mm and sealed with pressure sensitive tape not less than 50mm wide. All penetrations of the DPM by plumbing and services or punctures during construction shall also be sealed with pressure sensitive tape. The DPM may extend beyond the edge of the slab i.e. underneath the formwork, or may be folded and stapled up the inside of the formwork. The minimum requirement is that the DPM extends to the outside of the edge beam. It is very important that the DPM is not bunched up at the formwork.

ThermoX DPM is highly reflective and sunglasses should be used when installing on sunny days. The reflective side is placed upwards.

3.8 POD INSTALLATION

The drawing should be reviewed to determine whether the symmetrical RibRaft®.

X-Pod® 750/215 is specified or the non-symmetrical 1500/215 pod. Review of the 1500/215 pod will show that only two of the sides only will create a 100mm rib.

Place a row of RibRaft® X-Pod®s the specified distance away from the formwork (refer consent drawings). Click in X-Pod keystones along perimeter beam to secure in place. Align second row of X-Pod®s and clip together in groups of four pods with X-Pod® Keystone in the holes provided. The X-Pod® Keystones click into place. Continue placing X-Pod®s and clicking together with X-Pod® Keystones. Note the pods are securely held together and modest realignment can occur by pushing. However, take care to avoid damage to the DPM.

Where adjustment pods are specified, or where required to frame around a plumbing penetration, follow the following procedure, ***refer Figure 6.***

FIGURE 6 RIBRAFT® X-POD® TWO PART ADJUSTMENT PODS

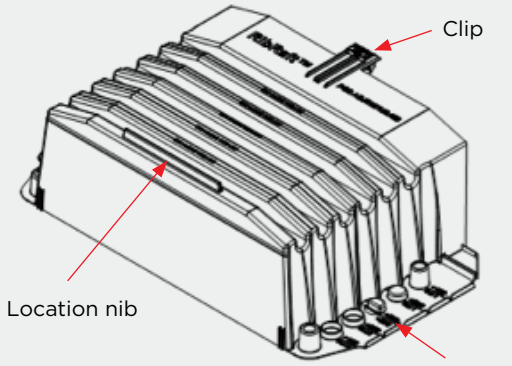

RibRaft® X-Pod® ADJ 215/150.400

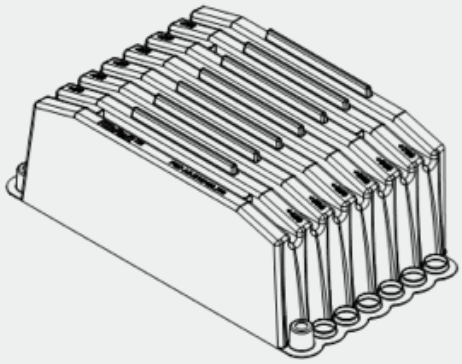

RibRaft® X-Pod® ADJ 215/450.700

Illustration: © Ribraftdesign.co.nz

ABA20220988
APPROVED - Site Copy
Hastings District Council
20/09/2022

Where a 400mm gap needs filling use the ADJ 215/150.400 pod. Simply clip the alignment clip into the recess provided in the RibRaft® X-Pod®.

Where the required extension width is between 150 and 350mm (in 50mm increments), the ADJ 215/150.400 pod requires cutting. The location of the required cuts are shown on the side of the adjustment pod. For 150 to 200mm extensions two cuts are required, while for 250 to 350mm extensions only one is required. Once cut, clip the clip end into the recess in the X-Pod® and overlay the other end to provide a stop end.

For extension requirements of 450 to 700mm clip the ADJ 215/150.400 into the X-Pod® and overlay the ADJ 215/450.700 to achieve the required extension. Aligning the extension number on the side of 215/450.700 pod with the location nib on the ADJ 215/150.400 pod will achieve the required extension in 50mm increments.

The holes on the sides of the extension pods are designed to accommodate the X-Pod® Keystone if required.

3.9 REINFORCEMENT PLACEMENT

The X-Pod® Keystones have been designed to securely hold reinforcement in positon without the need for tying. Place reinforcement in the location and to the details shown on the drawing. Clip reinforcement into place in X-Pod® Keystones.

Mesh can either be placed on reinforcement chairs or supported on the upstands in the corner of each X-Pod®. Refer to the drawings to determined which mesh support mechanism is specified for a particular project to determine the preference of the design engineer.

3.10 CONCRETE PLACEMENT

Firth concrete mix IP2019X or IP2519X are the most commonly specified mix designs for X-Pod® floors. The volume of the concrete floor above the pods can be estimated by calculating the overall volume including the pods (typically 750x750x300) and deducting the volume of the X-Pod®s provided in Table 2.

TABLE 2 VOLUME OF RIBRAFT® X-POD®S

Type of X-Pod®	Volume (litres)
215/750	83
215/1500	91

The Firth concrete mix is designed to have a suitable strength at a higher slump. The mix has been formulated to achieve appropriate filling of the X-Pod® foundation system. Pumping concrete is the recommended method of delivering the fresh concrete to the work face. Other methods of delivery may be suitable however approval from Firth or project engineer is required. For placing and finishing guidelines refer below and to CCANZ's posters number 3 and 5.

1. It is generally preferable to start pour at the garage (allows a harder, flatter finish) and work away. Controlling the flow from the pump nozzle is important to ensure even coverage.
2. Follow behind pour face with immersion (spud) type vibrator to all concrete (beams, ribs and top slab).
3. Care must be taken around plumbing to ensure damage, or movement does not occur.
4. Following vibration, normal concrete finishing techniques shall be carried out (refer poster number 5). Screed off concrete using normal screeding tools or vibrating screeds. Bull float to push down aggregates left at the surface during the screeding operation. Finish the edges with steel trowel and the interior of the slab surface with troweling machines. It is important that final troweling does not commence until all the bleed water has evaporated as premature commencement of troweling can lead to surface delamination or dusting.

ABA20220988
APPROVED - Site Copy
Hastings District Council
20/09/2022

5 Hot and/or windy conditions present during pouring/finishing require steps be taken for the protection of the concrete to prevent plastic cracking. Protection measures include:

- **a** Aliphatic alcohol sprays
- **b** Water vapour misting over surface (ie from water blaster directed upward, and wind carrying mist over slab surface). However this water must be fully evaporated from the surface before commencing trowelling.
- **c** Positioning wind breaks

6 Curing the slab is crucial to ensure strength gain of concrete and protection from early age cracking. Suitable methods of curing include:

- **a** Water spraying/ponding
- **b** Curing membrane sprays
- **c** Polythene covering

7 If environmental conditions forecast greater than 12 degrees variation of day time to overnight temperatures, then measures to protect slab from thermal shock shall be employed, these include:

- **a** Planning the pour time to minimise the temperature variations the concrete will experience
- **b** Covering surface with fabric, plastic covers or polythene
- **c** Using early entry saws

Forms shall not be struck on the day of the pour, and consideration should be given to leaving forms in place for 2-3 days following pour in very cold or shaded locations.

3.11 SHRINKAGE CONTROL JOINTS

Shrinkage control joints reduce the risk of unwanted cracks, and their placement needs to be carefully considered where uncontrolled cracking could be unacceptable. Two types are described here, saw cut joints (which are tied joints) and free joints.

3.11.1 SAW CUT JOINTS

Saw cuts are located at positons in which the concrete is likely to crack due to stresses induced by restrained shrinkage. The aim of providing them is for the concrete to crack at the bottom of the saw cut thus minimizing the potential for a visible crack wandering over the surface. The level of reinforcement provided in a RibRaft® X-Pod® flooring system mean that cracks have no structural implications being only an aesthetics issue. Factors to consider are the type of floor finish, the location of ribs and ground beams.

When warm sunny days are followed by cool nights, the change in temperature can cause cracking. Hence preference should be given to using early entry saws which are used immediately after finishing. Shrinkage control joints cut using diamond blades shall be cut as early as possible which is typically within 24 hours of hardening in summer, and 48 hours in winter. They shall be cut to a depth of 25mm. Shrinkage control joints do not guaranteed to eliminate all visible or unwanted cracks.

Joints shall be positioned to coincide with major changes in floor plan. Where concrete is to be exposed, for example in a garage, or brittle covering placed over, the maximum intermediate bay sizes shall be limited to 5m. Bay dimensions formed by shrinkage control joints shall be limited to a maximum ratio of length:width of 1.5:1. Where a shrinkage control joint runs along the line of a load bearing rib, then the joint shall be located directly above one edge of that rib.

In order to limit the width of cracks at re-entrant, or internal corners, extra steel is often specified and is placed on top of the mesh. These are typically 2-HD12 bars (grade 500E), 1200mm long tied to the top of the mesh at 200mm centres, with 50mm cover to the internal corner – refer Building Consent drawing for details.

3.11.2 FREE JOINTS

For large plan areas the designer may specify free joints. These are typically joints which allow unrestrained movement, but are doweled to prevent vertical movement. If specified then follow details shown on the building consent drawings.

ABA20220988
APPROVED - Site Copy
Hastings District Council
20/09/2022

3.12 FINISH EXPECTATIONS

The Building Amendment Act 2013 introduced new consumer protection measures which became effective on 1 January 2015. MBIE has developed guidance to the industry on what constitutes a defect and the definition of acceptable/unacceptable defects. The MBIE guidance document suggest that for a concrete floor it is recognised that some cracking in concrete is common and not necessarily a sign of poor workmanship. The document suggests that cracks up to 3mm wide are acceptable.

It is also recognises that the levelness of the floor is important. NZS3114 requires an even plane within 35mm for every 3m direction for a carpeted floors and 33mm for tiled and vinyl floors. Individual mounds should be less than 3mm high and depressions less than 3mm deep. In additional no abrupt deviations greater than specified in NZS3114 should exist.

Visible reinforcing or bony concrete should not exist along the slab edge.

Concrete is a natural material and shade variation can be expected. Often slight colour variations will fade with time.

4 INSTALLATION DOCUMENTATION

When requested, the installation contractor shall provide a PS3 for the installation of the Firth RibRaft® X-Pod® floor. Confirming that construction was in accordance with the project drawings and that the concrete used for the project was supplied by Firth Industries.



POSTER No. 3

PLACING AND COMPACTING

PLACING

- Make sure you can see what you are doing
  - Lights may be needed for thin and/or deep formwork
- Concrete mixers, skips and pumps can easily place the concrete exactly where it is needed
- Make sure that you order the right type of concrete with the correct slump for your placing method because you should not add water to a mix on site
  - A different type of concrete is used for pumping than is used for placing with a skip for example
  - Only small amounts of water may be added to a mix on site to make up for loss of water during travel, and may only authorised by the Ready Mix supplier
- Placing must be done at the correct speed
  - Too fast and the compacting gang will not be able to keep up
  - Too slow and the mix will stiffen making compaction very difficult
- Concrete should be placed in layers to make sure that it is compacted properly
  - With poker vibrators the layers shouldn't be deeper than the length of the head
  - With vibrating beams layers shouldn't be deeper than 150 mm
- When dropping concrete from a height use tubes and/or baffle boards to prevent damage to the formwork

1 CONCRETE MIXERS CAN PLACE THE CONCRETE EXACTLY WHERE IT IS NEEDED



2 TUBES ATTACHED TO SKIPS CAN AIM THE CONCRETE IN THE RIGHT DIRECTION



3 CONCRETE PUMPS CAN MOVE THE CONCRETE LONG DISTANCES TO WHERE IT IS NEEDED



4

SLUMP	ON SITE	
Check the slump is right for the job	Site workers must NOT add water to the concrete	Ready Mix suppliers may add up to 10 litres/m³ to adjust the slump

5 DON'T PLACE CONCRETE IN PILES BUT IN FLAT, EVEN LAYERS

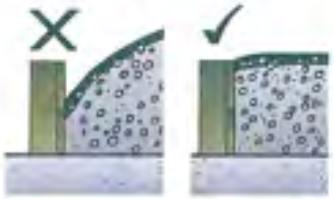

6 DON'T MAKE THE SECOND LAYER TOO THICK. THE POKER MUST GO 100mm INTO THE FIRST LAYER



7 BAFFLE BOARDS PROTECT THE FORMWORK FROM BEING DAMAGED BY DROPPED CONCRETE



8 FOR THIN SLABS USE A BEAM VIBRATOR. FOR COLUMNS, WALLS AND THICK SLABS USE POKER VIBRATORS

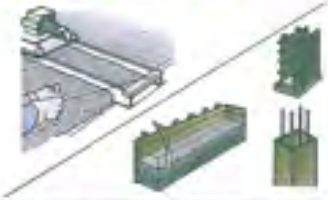

9 ALWAYS HAVE A SURCHARGE OF CONCRETE IN FRONT OF ANY BEAM VIBRATOR.

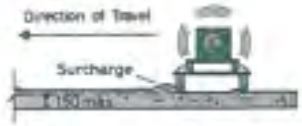

10 DOUBLE BEAM VIBRATORS REQUIRE NO FINISHING ON SOME JOBS



11 FOR SMALL (UP TO 150mm THICK) SLABS A HAND TAMPER MAY BE USED



12 POKER VIBRATORS SHOULD BE USED ALONG THE EDGES OF SLABS WHEN COMPACTING WITH A BEAM



COMPACTING

- Air is always trapped in concrete when it is being mixed.
- The aim of compaction is to remove as much of this air as possible.
- Why does getting rid of the air matter?
  - Air holes reduce the strength of concrete.
    If you don't compact concrete, it may only be half as strong as it should be.
  - Air holes in the concrete stop a good bond forming between the concrete and the reinforcing steel making the structure weaker.
  - Large air holes can cause ugly marks on the surface.
- Use the right compaction equipment for each job.
  - Poker vibrators for beams, columns, walls and deep slabs.
  - Beam vibrators for thin layered slabs.
  - Clamp-on vibrators can be used on special formwork, especially in the precast industry.
- Always have spare compacting equipment in case of a breakdown.
- For more information on the use of poker vibrators see Poster No 4 "Using a Poker Vibrator".

ABA2022098
APPROVED - Site Copy
Hastings District Council
20/09/2022

THE NEW ZEALAND READY MIXED CONCRETE ASSOCIATION INC.

SAFETY ON SITE: Suitable protective clothing should be worn when handling wet concrete

Cement & Concrete Association, PO Box 448, Wellington • Telephone 04 499 8820, Facsimile 04 499 7760 • www.cca.org.nz

ccanz Cement & Concrete Association of New Zealand

POSTER No. 5

METHODS OF FINISHING CONCRETE

PLANNING

Labour Resources

Make sure you have enough labour for the job size. Typical finishes have the following labour output production.

Floating
- Wood float - 3 to 4 m²/hour
- Hand steel float 3 to 4m²/hour
- Power float - 6 to 8m²/hour

Power Trowelling
- 1 pass - 6 to 8m²/hour
- 2 passes - 10 to 12 m²/hour

Equipment

Make sure you have enough equipment for the job. Make sure you know where to get replacement gear for power equipment.

Typical gear list:
- Square Mouthed shovels.
- Concrete Rakes
- Straightedge
- Edging trowels
- Power Finishing
  - Float
  - Trowel
- Hand finishing
  - Bull float
  - Wood float
  - Steel Trowels
- Special broom to suit a textured finish.
- Special finishes: you will need to check you have all the special gear, such as imprinting stamps, etc.

WEATHER

- Do not concrete slabs that are exposed to the weather if rain is forecast, it is virtually impossible to repair a rain-damaged surface.
- Have some sheets of polythene available to cover the slab if you do get caught by a shower of rain.

1



SCREEDED FINISH (U1): This is the simplest finish to produce - the surface is formed with a hand tamping beam during the placement and compaction of the concrete.

2



FLOATED FINISH (U2): Concrete surface being levelled with a "bull float". On the forward stroke the float is pushed with handle lowered, on the returns stroke the float is pulled with the handle raised.

3

BLEED WATER: Water known as bleed water will come onto the surface of concrete within 15 minutes of compacting the concrete. No finishing work can start until this water has evaporated.

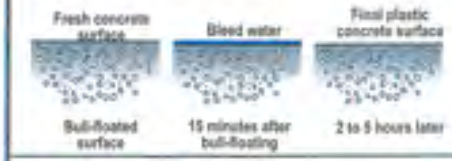

WAITING TIME

4

Winter
- In cold weather the waiting period could be up to 5 hours.
- The wetter the concrete, you use the longer the wait.

Summer
- In hot weather, the waiting time could be two hours.
- If it is drying faster than two hours, then plastic surface cracking is likely to occur.
- To stop the rapid drying, mist spray with water or an aliphatic alcohol special mixture onto the plastic surface of the concrete. This should extend the drying time to 2 hours which will allow time for excess water in the lower layers to escape through the still plastic upper surface.





FOOTPRINT Concrete is ready for power floating when standing on the concrete creates an imprint not deeper than 2-3mm.

5

6



POWER FLOATING a slab surface.

7



HAND TROWELLING: The finish near edge is improved with steel hand trowel.

8





POWER TROWELLING can start when the surface has dried and is not sticky to the palm of the hand. The close-up view is of the trowel blade tilted during final stages.

THE PROCESS

- The basic steps are shown in the numbered sequence 1 to 8.
- There must be a waiting period for bleed water to evaporate from the slab surface.
- Be warned that in the summer, evaporation can be too rapid leading to plastic cracking.
- In the summer, surface stiffening may still leave the lower parts of the slab in a plastic state. This can lead to problems of a rolling surface while trying to finish.
- As soon as the concrete has hardened enough to avoid surface marking, usually after 2 passes of steel trowelling, start the curing process, using for example a membrane spray. See Curing Poster No 6

TYPES OF FINISHES

Make sure you understand the specification requirements in NZS 3114 before you start. The finish designations in NZS 3114 are:

- U1 Screeded Finish - see Step 1
- U2 Floated Finish - typically brushed after the U1 finish.
- U3 Trowelled Finish - developed from a U2 finish after bleed water has left the surface has evaporated.
- U4 Vibrating steel beam - surface left untouched from beam.
- U5/6 Broom finishes - different textures
- U11 Early Age Grinding - usually applied to a U2 finish 36-48 hours after completing.

Note: there are other special finishes in NZS 3114, those using the letter E are Exposed Aggregate finishes.

SLAB PROTECTION

- Have the curing process decided before you start the job - *See Curing Poster No 6*
- In summer, make sure you can apply a mist spray of water or a special aliphatic alcohol to slow down the surface evaporation of water. This is very important with special concretes often used on commercial/industrial floors.
- In winter or in summer where there can be a big change in temperature between day and night, make sure you cover the slab.

APPROVED - Site Copy
Hastings District Council
20/09/2022
ABA20220988

THE NEW ZEALAND READY MIXED CONCRETE ASSOCIATION INC.

SAFETY ON SITE: Suitable protective clothing should be worn when handling wet concrete

Cement & Concrete Association, PO Box 446, Wellington • Telephone 04 499 8820, Facsimile 04 499 7760 • www.cca.org.nz

ccanz Cement & Concrete Association of New Zealand

ABA20220988
APPROVED - Site Copy
Hastings District Council
20/09/2022

RIBRAFT® X-POD®



© Firth Industries 2018. All rights reserved. Content in this document is protected under the Copyright Act 1994. No material may be reproduced in whole or in part without the written consent of the copyright holder.

0800 FIRTH 1
FIRTH.CO.NZ

PRODUCTSPEC
productspec.net

masterspec
masterspec.co.nz

ABA20220988
APPROVED - Site Copy
Hastings District Council
20/09/2022

SPECIFICATION

of work to be done and materials to be used in carrying out the works shown on the accompanying drawings

New Dwelling

(project name)

Lot 33, 6 Te Ara Matipou, Frimley, Hastings, New Zealand

(project address)

Redshaw Homes

(client)

Project Ref: 21-025

Date: 01 July 2022
SITE SPECIFIC

TABLE OF CONTENTS

ABA20220988
APPROVED - Site Copy
Hastings District Council
20/09/2022

1220	PROJECT	3
1232	INTERPRETATION & DEFINITIONS	5
1232S1	EXPLANATION OF SCHEDULE SECTIONS	7
1233	REFERENCED DOCUMENTS	8
1234	DOCUMENTATION	9
1238	AS BUILT DOCUMENTATION	12
1238S1	SCHEDULE OF AS BUILT DOCUMENTATION	13
1240	ESTABLISHMENT	14
1250	TEMPORARY WORKS & SERVICES	15
1270	CONSTRUCTION	17
3155FR	FIRTH RIBRAFT® FLOOR SYSTEMS	20
3813F	FUTUREBUILD® NZ - LVL STRUCTURAL FRAMING	26
3820	CARPENTRY	28
4161	UNDERLAYS, FOIL AND DPC	30
4171HR	JAMES HARDIE® RIGID AIR BARRIERS	33
4231HL	JAMES HARDIE® LINEA™ CLADDING	37
4239JH	JAMES HARDIE® SOFFITS	41
4284RE	RCS INSULATED FACADE SYSTEM	44
4323MT	METROTILE METAL ROOFING TILES	50
4521	ALUMINIUM WINDOWS AND DOORS	54
4555	GARAGE DOORS	60
4610	GLAZING RESIDENTIAL	62
4710P	PINK® BATTS® & PINK® BATTS® SILENCER® INSULATION	66
5113G	GIB® PLASTERBOARD LININGS	69
5230	INTERIOR DOORS	73
5510	JOINERY & PROPRIETARY FIXTURES	75
6221	TILING SYSTEMS	78
6700	PAINTING GENERAL	84
7120	HOT & COLD WATER SYSTEM	90
7151	SANITARY FIXTURES, TAPWARE & ACCESSORIES	94
7411C	CONTINUOUS SPOUTING RAINWATER SYSTEMS	98
7420	SANITARY SYSTEMS	102
7430	DRAINAGE	103

ABA20220988
APPROVED - Site Copy
Hastings District Council
20/09/2022

ABA20220988
APPROVED - Site Copy
Hastings District Council
20/09/2022

1220 PROJECT

1 GENERAL

This general section describes the project including:

- A description of the work
- Site description, features and restrictions
- Design parameters for design by contractor
- Archaeological discovery

1.1 READ ALL SECTIONS TOGETHER

Read all general sections together with all other sections.

1.2 DESCRIPTION OF THE WORK

New single level dwelling.
Construction to NZS 3604
Firth Xpod™ Dome Floor System, timber framed, truss roof construction and metal tile roofing.
Graphex Insulated Plaster Facade System, cavity construction, JH Linea weatherboard over cavity, HomeRAB pre-cladding.
LVL components.

1.3 RESTRICTED BUILDING WORK

This project includes Restricted Building Work.

Site

1.4 SITE

The site consists of: Flat site
As shown on drawing: sheet 2

1.5 LEGAL DESCRIPTION

The site of the works, the street address and the legal description are shown on the drawings.

Site environment - Wind

1.6 WIND DESIGN PARAMETERS - NON SPECIFIC DESIGN

The design wind pressures are to NZS 3604, Table 5.4 Determination of wind zone, up to and including Extra High Wind Zone.
Building wind zone High (refer to NZS 3604, table 5.4)

Site environment - Durability

1.7 EXPOSURE ZONE

The exposure zone is to NZS 3604, Section 4 Durability, 4.2 Exposure zones and NZBC E2/AS1.
The site zone is: B

Site environment - Seismic

1.8 EARTHQUAKE ZONE - NON SPECIFIC DESIGN

The zone is to NZS 3604, Section 5 Bracing design, 5.3 Earthquake bracing demand.
The earthquake zone is: 3

Archaeological discovery

ABA20220988
APPROVED - Site Copy
Hastings District Council
20/09/2022

1.9 REPORT FINDING ANY ANTIQUITIES AND ITEMS OF VALUE

Report the finding of any fossils, antiquities and other items of value, to the Contract Administrator. All to remain undisturbed until approval is given for removal.

Pre-1900, items or evidence of human activity on the site, come under the Heritage New Zealand Pouhere Taonga Act 2014. If such items or evidence is discovered work must stop immediately and the Contract Administrator must be notified immediately. The site may be classified as an Archaeological Site under the Act, and the Contract Administrator or Owner must contact the Heritage New Zealand for authority to proceed.

Post-1900 items remain the property of the owner, pre-1900 items may remain the property of the owner or the Crown subject to what is found.

ABA20220988
APPROVED - Site Copy
Hastings District Council
20/09/2022

1232 INTERPRETATION & DEFINITIONS

1 GENERAL

This general section relates to definitions and interpretation that are used in this specification.

Definitions

1.1 DEFINITIONS

Hold point:	A stage of the construction where the contract administrator and any other nominated person requires notice to be given that particular work is to be carried out. Work may not proceed on that particular part until the contract administrator and any other nominated person has advised that work can continue. A notice period of 2 Working Days is required unless stated otherwise.
Notification point:	A stage of the construction where the contract administrator and any other nominated person requires notice to be given that particular work is to be carried out. Work may continue and the contract administrator and any other nominated person may choose whether or not they wish to witness the particular work being carried out. A notice period of 2 Working Days is required unless stated otherwise.
Product:	A thing or substance produced by natural process or manufacture.
Proprietary:	Identifiable by naming the manufacturer, supplier, installer, trade name, brand name, catalogue or reference number.
Provide and fix:	"Provide" or "fix" or "supply" or "fix" if used separately mean provide and fix unless explicitly stated otherwise.
Required:	Required by the documents, the New Zealand Building Code or by a statutory authority.
Review:	Review by the contract administrator and other consultants is for general compliance only. Review does not remove the need for the contractor to comply with the stated requirements, details and specifications of the manufacturers and suppliers of individual components, materials and finishes. Neither can the review be construed as authorising departures from the contract documents.
Working day:	Working day means a calendar day other than any Saturday, Sunday, public holiday or any day falling within the period from 24 December to 5 January, both days inclusive, irrespective of the days on which work is actually carried out.
Workplace:	Workplace means the place where work is being carried out, or is customarily carried out, for a business or undertaking including any place where a worker goes, or is likely to be, while at work (under Health and Safety at Work Act 2015).

1.2 PERSONNEL

Principal:	The person defined as "Principal" in the conditions of contract.
Contractor:	The person contracted by the principal to carry out the contract.
Contract administrator:	The person appointed by the principal to administer the contract on the principal's behalf. Where no person has been appointed by the principal, it means the principal or the principal's representative.

ABA20220988
APPROVED - Site Copy
Hastings District Council
20/09/2022

1.3 ABBREVIATIONS

The following abbreviations are used throughout the specification:

AS/NZS	Joint Australian/New Zealand Standard
BCA	Building Consent Authority
BRANZ	Building Research Association of New Zealand
COP	Code of practice
LBP	Licensed Building Practitioner
MBIE	Ministry of Business, Innovation and Employment
MPNZA	Master Painters New Zealand Association Inc
NZBC	New Zealand Building Code
NZS	New Zealand Standard
NZS/AS	Joint New Zealand/Australian Standard
NZTA	New Zealand Transport Agency
NUO	Network Utility Operator
OSH	Occupational Safety and Health
RBW	Restricted Building Work
SARNZ	Scaffolding and Rigging New Zealand Inc
TA	Territorial Authority
TNZ	Transit New Zealand (Transit New Zealand is now New Zealand Transport Agency NZTA - some specifications are still prefixed TNZ)

1.4 DEFINED WORDS

Words defined in the conditions of contract, New Zealand Standards, or other reference documents, to have the same interpretation and meaning when used in their lower case, title case or upper case form in the specification text.

1.5 WORDS IMPORTING PLURAL AND SINGULAR

Where the context requires, words importing singular only, also include plural and vice versa.

ABA20220988
APPROVED - Site Copy
Hastings District Council
20/09/2022

1232S1 EXPLANATION OF SCHEDULE SECTIONS

1 GENERAL

This general section provides an explanation of schedule sections and their relationship to general sections and work sections. Specific schedule sections contained within this specification are also identified.

1.1 EXPLANATION OF SCHEDULE SECTIONS

A schedule section identifies work sections that contain common requirements, as identified in the title of the schedule section. For example 1235S1 SCHEDULE OF SHOP DRAWINGS identifies work sections that have requirements for shop drawings. Details of the requirements are contained in the identified work sections with additional requirements contained in the general section 1235 SHOP DRAWINGS.

Some schedule sections are identified by the 4 digit CBI (Co-ordinated Building Information) number of the general section that they relate to, followed by the letter "S" followed by a numeral (1-9). The numeral allows for multiple schedule sections to be associated with the same general section.

Other schedule sections that do not share a common CBI number with a general section, have their own unique 4 digit CBI number, followed by the letter "S" followed by a numeral. These schedule sections contain additional subject content relating to the schedules and the identified work sections.

1.2 SCHEDULE SECTIONS

The following Schedule sections are contained within the specification:
1238S1 Schedule of As Built Documentation

ABA20220988
APPROVED - Site Copy
Hastings District Council
20/09/2022

1233 REFERENCED DOCUMENTS

1 GENERAL

1.1 REFERENCED DOCUMENTS

Throughout this specification, reference is made to various New Zealand Building Code Compliance Documents (NZBC __), acceptable solutions (__ AS_) and verification methods (__ VM_) for criteria and/or methods used to establish compliance with the New Zealand Building Code.

Reference is also made to various standards produced by Standards New Zealand (NZS, AS/NZS, NZS/AS), overseas standards and to listed Acts, Regulations and various industry codes of practice and practice guides. The latest edition (including amendments and provisional editions) at the date of this specification applies unless stated otherwise.

It is the responsibility of the contractor to be familiar with the materials and expert in the techniques quoted in these publications.

Documents cited both directly and within other cited publications are deemed to form part of this specification. However, this specification takes precedence in the event of it being at variance with the cited documents.

1.2 DOCUMENTS

Documents referred to in the GENERAL sections are:

NZBC F5/AS1	Construction and demolition hazards
NZS 3109	Concrete construction
NZS 3602	Timber and wood-based products for use in building
NZS 3604	Timber-framed buildings
NZS 6803	Acoustics - Construction Noise

Building Act 2004
Building Regulations 1992
Health and Safety at Work Act 2015
Health and Safety at Work (General Risk and Workplace Management) Regulations 2016
Health and Safety at Work (Hazardous Substances) Regulations 2017
Health and Safety in Employment Regulations 1995
New Zealand Building Code
Heritage New Zealand Pouhere Taonga Act 2014
Smoke-free Environments Act 1990

WorkSafe	Guidelines for the provision of facilities and general safety in the construction industry
WorkSafe	Good Practice Guidelines - Excavation Safety
WorkSafe	Scaffolding in New Zealand - Good Practice Guidelines

ABA20220988
APPROVED - Site Copy
Hastings District Council
20/09/2022

1234 DOCUMENTATION

1 GENERAL

This general section relates to documentation required by the Territorial Authority / Building Consent Authority for compliance with the New Zealand Building Code. It also includes documentation relating to:

- Substitutions
- Manufacturers' documents
- Branded work sections
- Care of construction documents
- Confidentiality of documents
- Receipt of construction documents

Building Consent Authority documentation

1.1 BUILDING CONSENT

Obtain the original building consent forms and documents from the owner and keep them on site, preserve the condition of consent forms and documents. Liaise with the building consent authority for all notices to be given and all inspections required during construction to ensure compliance. Return the consent form and documents to the owner on completion.

1.2 BUILDING CONSENT COMPLIANCE

It is an offence under the Building Act 2004

- to carry out any work not in accordance with the building consent.
- to carry out Restricted Building Work by anyone other than a Licensed Building Practitioner licensed for that type of work.

The resolution of matters concerning building code compliance to be referred to the contract administrator for a direction and then if required to the BCA for consent.

Where any alteration is requested by the territorial authority or any other authority, do not undertake such alteration until the matter has been referred to the contract administrator for direction.

1.3 PROJECT PERSONNEL

Provide names and contact details of the contractor's key personnel and tradespersons who are involved with the project. Review the list once a month and reissue it if changes have been made.

Licensed Building Practitioner documentation

1.4 LICENSED BUILDING PRACTITIONERS

Provide LBP details. Provide names, LBP numbers, areas of practice and contact information. Provide this information to the BCA before commencing work on the Restricted Building Work in the form required by the BCA. Advise the BCA of any change to an LBP previously advised.

Include the following as applicable

- Carpenter
- Foundations 1 Concrete foundation walls and concrete slab-on-ground constructor
- Roofing 3 Metal tile roofer
- External plastering 2 Proprietary Plaster Cladding Systems (PPCS) plasterer

Also provide names and contact details of the following

- Registered drainlayer
- Registered plumber
- Registered electrician

1.5 RECORD OF WORK

Where Restricted Building Work is carried out by a LBP, on completion provide a Record of Work. Provide copies to both the BCA and the Contract Administrator.

Compliance information

ABA20220988
APPROVED - Site Copy
Hastings District Council
20/09/2022

1.6 DOCUMENTATION REQUIRED FOR CODE COMPLIANCE

Information may be required either as a condition of the contract documents or as a condition of the building consent. It may include the following:

- Applicators approval certificate from the manufacturer / supplier
- Manufacturer's / supplier's warranty
- Installer / applicator's warranty
- Producer Statement (PS1) - Design
- Producer Statement (PS3) - Construction from the applicator / installer
- Producer Statement (PS4) - Construction review from an acceptable suitably qualified person

Refer to the general sections for the requirements for compliance information to be provided by the contractor.

Refer to the building consent for the requirements for compliance information to be provided by the contractor.

Obtain required documents from the relevant parties for delivery to the contract administrator after the final inspection has been carried out by the BCA.

1.7 PRODUCER STATEMENTS

When producer statements verifying construction are required, provide copies to both the Building Consent Authority and the Contract Administrator. Provide producer statements in the form required by the BCA.

Residential building contract

1.8 BUILDING CONTRACT

If requested provide evidence of the written building contract that the residential customer has signed.

1.9 DOCUMENTATION REQUIRED ON COMPLETION

As soon as practicable after completion of the building work, provide in writing the following information and documentation to the client and the relevant territorial authority.

If applicable also provide any guarantee or insurance obtained by the building contractor in relation to the building work.

Substitutions

1.10 ACCEPTABLE PRODUCT/MATERIAL SUPPLIERS

Where a product or material supplier is named in SELECTIONS, the product/material must be provided by the named supplier. Where more than one named supplier, any one of the named suppliers will be acceptable.

1.11 NO SUBSTITUTIONS

Substitutions are not permitted to any of the specified products and systems listed in a section unless specified otherwise. If a product is not available then immediately contact the contract administrator for direction.

1.12 PROPOSED SUBSTITUTIONS

Substitution of products or systems contained within branded work sections is not allowed. The contractor may propose substitutions to products within non branded work sections, when the contractor has determined that the proposed substitution is an alternative to the specified product.

1.13 NOTIFICATION OF SUBSTITUTIONS

Notify the contract administrator of proposed substitution of specified products.

1.14 ACCEPTANCE OF SUBSTITUTIONS

Acceptance of any proposed substitutions will be given in writing by the contract administrator.

Amendments to issued Building Consent

ABA20220988
APPROVED - Site Copy
Hastings District Council
20/09/2022

1.15 CONTRACTOR AMENDMENTS TO BUILDING CONSENT

Where the contractor has sought acceptance of a substitution or a variation which is for the contractor's own convenience and the substitution or variation requires an amendment to the Building Consent, the contractor must apply for and obtain the required amendment.

1.16 PRINCIPAL AMENDMENTS TO BUILDING CONSENT

Where the principal is proposing a substitution or a variation which requires an amendment to the Building Consent, the contractor must provide to the principal information that the contractor has that is required for the amendment.

Manufacturer's documents

1.17 MANUFACTURER'S AND SUPPLIER'S INSTALLATION REQUIREMENTS

Manufacturer's and supplier's requirements, instructions, specifications or details mean those issued by them for their particular product, material or component and are the latest edition.

1.18 CONTRACTOR TO OBTAIN CURRENT DOCUMENTATION

Where manufacturer’s installation, application and execution requirements are referred to in this specification, the Contractor must ensure they are fully aware of this documentation. Whenever necessary obtain and keep on site the relevant latest version of such documentation and make it available to workers carrying out that part of the work.

1.19 DOCUMENTATION PROVIDED FOR BUILDING CONSENT

Documentation including manufacturer’s installation instructions, specification data sheets, producer statements, BRANZ and similar appraisals may be included in the issued Building Consent. These documents have been provided only to demonstrate compliance with the NZBC.

Branded work sections

1.20 BRANDED PRODUCTS / SYSTEMS

Where branded products and systems are specified, all products and components of the system must be as per the specification.

1.21 CROSS REFERENCED WORK SECTIONS

If any related work is cross referenced to a generic work section, but only the equivalent branded section is included in the specification, use that branded section.

Care of construction documents

1.22 CONSTRUCTION ISSUE

Take receipt of the plans, specifications and other documents issued “for construction”. Keep at least one copy on site available for use by all on site workers. Keep a record of copies provided to others including subcontractors. Protect the documents as appropriate. Obtain replacement copies for documents that have become damaged.

1.23 REVISIONS TO CONSTRUCTION ISSUE

Where revised plans and other documents are issued ensure that superseded documents are deleted from the working sets. Ensure that subcontractors are provided with amended documents.

2 SELECTIONS

Receipt of construction documents

2.1 INITIAL ISSUE & REVISIONS - HARD COPIES

Initial issue:	1 at full size
Revisions:	1 at full size

ABA20220988
APPROVED - Site Copy
Hastings District Council
20/09/2022

1238 AS BUILT DOCUMENTATION

1 GENERAL

This general section relates to common requirements for the preparation, submission and review of as built documentation referred to within this specification and referred to within separate specifications/documents relating to this project. Detailed requirements for as built documentation for particular parts of the work may be included in specific work sections.

1.1 SCHEDULE SECTION

Refer to 1238S1 SCHEDULE OF AS BUILT DOCUMENTATION for work sections contained in this specification that have requirements for as built documentation.

1.2 AS BUILT DOCUMENT REQUIREMENTS

Where requirements for the as built documents and records are not stated in a specific section, they shall include:

As built drawings recording:

- The actual positions as constructed of all sewer, stormwater, sanitary plumbing, piped and ducted services, electrical and mechanical services.
- Other significant deviations and changes which are concealed in construction and cannot be identified by visual inspection

Records of:

- Products and materials selected for alternatives specified
- Approved substitutions and accepted alternatives
- Other approved changes and deviations to items specified.

1.3 COMPLETE AS BUILT DOCUMENTS

Prior to the end of the defects notification/liability period, provide complete as built documents reflecting any review requirements, with all Information of good quality and properly titled, numbered, cross-referenced and dated. Provide documents in sufficient detail to allow the principal to operate, maintain, adjust and re-assemble the contract works. Submit in hard copy and electronic form to the contract administrator.

1.4 AS BUILT DOCUMENTS - ELECTRONIC COPY

Provide an electronic copy of the as built documents in the following format:

Drawings:	PDF format (in addition provide DWG files if available)
Other documents:	PDF format

ABA20220988
APPROVED - Site Copy
Hastings District Council
20/09/2022

1238S1 SCHEDULE OF AS BUILT DOCUMENTATION

1 GENERAL

This schedule section identifies work sections in the specification that have requirements for the submission of as built documentation.

1.1 ASSOCIATED SECTIONS

Read in conjunction with:

- 1232S1 EXPLANATION OF SCHEDULE SECTIONS
- 1238 AS BUILT DOCUMENTATION
- Identified Work Sections

As built documents

1.2 AS BUILT DOCUMENTS

Refer to the following sections:

7430 Drainage

1.3 AS BUILT DOCUMENTS - ADDITIONAL ITEMS

Refer to separate documentation for as built documentation requirements not contained within this specification.

ABA20220988
APPROVED - Site Copy
Hastings District Council
20/09/2022

1240 ESTABLISHMENT

1 GENERAL

This general section relates to site establishment.

Notices and approvals

1.1 STATUTORY OBLIGATIONS

Comply with all statutory obligations and regulations of regulatory bodies controlling the execution of the works.

1.2 BUILDING CONSENT AUTHORITY AND NETWORK UTILITY APPROVALS

Attend on building consent authority officers, statutory and network utility inspectors, as necessary to obtain approvals, including those required for the completion of the works.

1.3 NOTIFY NETWORK UTILITY OPERATORS

Notify all network utility operators of proposed works before commencing site operations. Ascertain location of services or confirm that none exist in the vicinity of the works. Take all necessary precautions to avoid damage to existing services.

Site preparation

1.4 SITE AND SOIL SURVEYS

Carry out all investigations necessary and peruse all information available to determine ground conditions and likely ground performance both on the site and adjacent to it. Also refer to the territorial authority project information memorandum (PIM).

1.5 GROUND CONDITIONS

Refer to the geotechnical / soils report included with this specification.

ABA20220988
APPROVED - Site Copy
Hastings District Council
20/09/2022

1250 TEMPORARY WORKS & SERVICES

1 GENERAL

This general section relates to temporary works and services required for the construction of the contract works.

Temporary works

1.1 COSTS RELATING TO TEMPORARY WORKS

Pay all rates/fees in respect of temporary works.

1.2 MAINTENANCE OF TEMPORARY WORKS

Maintain alter, adapt and move temporary works and services as necessary. Clear away when no longer required and make good.

1.3 SAFEGUARD THE SITE, THE WORKS AND MATERIALS

Take reasonable precautions to prevent unauthorised access, including access outside working hours, to the site, the works and adjoining property. Safeguard the site, the works, materials and plant from damage and theft.

1.4 PROVIDE CONCRETE WASHWATER RUN OFF PROTECTION

Provide appropriate measures to prevent cement/concrete washwater or slurry run off to; drains or waterways, landscaped areas new or remaining and adjoining public or private properties. Comply with territorial and other authority requirements relating to cement/concrete washwater.

Pump washwater away from drains, waterways and adjoining property.

1.5 EXCAVATION SAFETY

To the Health and Safety at Work Act 2015.
Carry out excavation to WorkSafe, Good Practice Guidelines - Excavation Safety. This may include deep excavation, trenching, and areas behind unfilled retaining walls.
Carry out excavation using plant and equipment suitable for the purpose.

Temporary services

1.6 WATER

Provide clean, fresh water for the works and make arrangements for distributing about the site.

1.7 ELECTRICITY

Nominate the person to install and be responsible for the complete temporary electrical installation. The name and designation of the person responsible is to be displayed prominently and close to the main switch or circuit breaker.

Inspect and overhaul the installation at such intervals as are prescribed by the network utility operator but not more than three monthly intervals.

Scaffolding

1.8 SCAFFOLDING

Provide scaffolding for the efficient execution of the works.
Comply with:

- Health and Safety at Work Act 2015
- Health and Safety in Employment Regulations 1995
- Health and Safety at Work (General Risk and Workplace Management) Regulations 2016
- Worksafe - Scaffolding in New Zealand - Good Practice Guidelines

Care and protection - existing buildings

1.9 CONSTRUCTION KEYING AND SECURITY

Provide locksets with temporary keying, or install with the cylinders removed.

ABA20220988
APPROVED - Site Copy
Hastings District Council
20/09/2022

1.10 TEMPORARY STORAGE

Provide temporary storage areas and protective covers and screens to meet the requirements of the products to be stored.

Care and protection - Project

1.11 TEMPORARY PROTECTION

Provide and maintain temporary protection as required to protect products during transport, storage and handling. Provide temporary protection as required to protect the work in progress and the finished work.

ABA20220988
APPROVED - Site Copy
Hastings District Council
20/09/2022

1270 CONSTRUCTION

1 GENERAL

This GENERAL section relates to common requirements for construction issues.

Quality control and assurance

1.1 QUALITY ASSURANCE

Carry out and record regular checks of material quality and accuracy, including:

- Concrete quality and finish.
- All perimeter columns and frames for plumb.
- Levels of all floors relative to the site datum.
- Framing timber moisture content.

Where any material, quality or dimension falls outside specified or required tolerances, obtain written direction from the contract administrator. Where building consent approval is affected, confirm remedial action with the Building Consent Authority.

Provide all materials, plant, attendances, supervision, inspections and programming to ensure the required quality standards are met by all project personnel.

Noise and nuisance

1.2 LIMIT CONSTRUCTION NOISE

Minimise the effects of noise generation by including in the planning of the work such factors as placing of plant, programming the sequence of operations and other management functions. Limit construction noise to comply with the requirements of NZS 6803, the requirements of the Resource Management Act and the Health and Safety in Employment Regulations 1995 clause 11.

1.3 ACCEPTABLE NOISE LEVELS

Refer to NZS 6803 for the upper limits of construction work noise received in residential zones, dwellings in rural areas, industrial areas and commercial areas, note also the allowed adjustments. Do not exceed these limits or any limits imposed by regional councils or territorial authorities.

1.4 DIRT AND DROPPINGS

Remove dirt and droppings deposited on public or private thoroughfares from vehicles servicing the site to the satisfaction of the appropriate authorities and the contract administrator.

1.5 DAMAGE AND NUISANCE

Take precautions to prevent damage and nuisance from water, fire, smoke, dust, rubbish and all other causes resulting from the construction works.

Set-out and tolerances

1.6 SURVEY INFORMATION

Locate and verify survey marks and datum points required to set out the works. Record and maintain their position. Re-establish and replace disturbed or obliterated marks.

1.7 SET-OUT

Set out the work to conform with the drawings.

1.8 CHECK DIMENSIONS

Check all dimensions both on drawings and site, particularly the correlation between components and work in place. Take all dimensions on drawings to be between structural elements before linings or finishes, unless clearly stated otherwise.

© CIL Masterspec Jul 2022

ABA20220988
APPROVED - Site Copy
Hastings District Council
20/09/2022

1.9 TOLERANCES

All work to be level, plumb, and true to line and face. Unless otherwise specified in specific work sections of this specification, tolerances for structural work shall comply with the following:

Concrete construction:	To NZS 3109 Concrete construction
Timber framing:	To NZS 3604 Timber-framed buildings

Refer to work sections for tolerance requirements for finishes.

Execution

1.10 EXAMINE PREVIOUS WORK

Before commencing any part of the work carefully examine the previous work on which it depends, to ensure it is of the required standard.

1.11 EXECUTION GENERALLY

Construct the work in accordance with the documents issued for construction including any direction that may have been given by the contract administrator that varies the construction document.

1.12 MINIMISE DELAYS DUE TO WEATHER

Use appropriate techniques and methods to prevent damage and minimise delays due to weather.

Qualifications

1.13 QUALIFICATIONS GENERALLY

The work is to be carried out by workers and / or supervisors who are experienced, competent and familiar with the materials and the techniques specified. Workers must also be familiar with the manufacturers' and suppliers' installation and application instructions and standard details provided by them in relation to the use of the products for this project. If requested provide evidence of qualification / experience.

1.14 QUALIFICATIONS WORKERS – RESTRICTED BUILDING WORK

Where restricted building work (RBW) forms part of the contract works, workers, or supervisors of that work must be licensed building practitioners (LBP) holding current licenses for the particular restricted building work.
For rare instances where non-RBW also requires an LBP refer to individual work sections for details.

1.15 QUALIFICATIONS WORKERS – MANUFACTURER / SUPPLIER REQUIREMENTS

Where required by a manufacturer or supplier, workers must be specifically trained /approved / accredited / registered / licensed / certified by them. Refer to individual work sections for details.

1.16 QUALIFICATIONS – PRODUCER STATEMENTS

Where producer statements are required for parts of the work, ensure that person is suitably qualified and authorized to issue such producer statements.

1.17 NEW PRODUCTS

Products to be new unless stated otherwise, of the specified standard, and complying with all cited documents.

1.18 COMPATIBILITY OF PRODUCTS

Ensure all parts of a construction or finish are compatible and their individual use approved by the manufacturers and suppliers of other parts of the system. Source all parts of a system from a single manufacturer or supplier.

1.19 SUBSTRATE CONDITIONS

Ensure substrate conditions are within the manufacturer's or supplier's stated guidelines both before and during the installation of any material, product or system. Obtain written instructions on the necessary action to rectify unsatisfactory conditions.

ABA20220988
APPROVED - Site Copy
Hastings District Council
20/09/2022

1.20 INSTALLING PRODUCTS

Install in accordance with the manufacturer's or supplier's technical literature. Ensure that all installers are familiar with the required substrate conditions and the manufacturer's or supplier's specified preparation, fixing and finishing techniques.

1.21 COMPLY WITH STANDARDS

Comply with the relevant and/or cited Standard for any material or component. Obtain certificates of compliance when requested by the contract administrator.

1.22 CONDITION OF PRODUCTS

To be in perfect condition when incorporated into the work.

1.23 INCOMPATIBLE PRODUCTS

Separate incompatible materials and metals with separation layers, sleeves or gaskets of plastic film, bituminous felt or mastic or paint coatings, installed so that none are visible on exposed surfaces.

Spares & maintenance products

1.24 SPARES & MAINTENANCE PRODUCTS

Collect, protect, package, label and store safely all spares and maintenance products specified in the work sections. Give the contract administrator an inventory of all spares and maintenance products.

If no instruction is given within a work section for timing in relation to the provision of spares and maintenance products, then provide at practical completion.

Cleaning during the works

1.25 PERIODIC SITE CLEANING

Carry out periodic site cleaning during the contract period. Place waste material in appropriate storage pending removal from the site. Keep food waste separate from construction waste.

Completion

1.26 LEAVE WORK

Leave work to the standard required for the following procedures.

Commissioning

1.27 MOVING PARTS

Adjust, ease and lubricate all doors, windows, drawers, hardware, appliances, controls and all moving parts to give easy and efficient operation.

1.28 SECURITY AT COMPLETION

Remove any temporary lock cylinders and complete final keying prior to handing over keys to the principal on completion of the works. Leave the works secure with all accesses locked. Account for all keys/cards/codes and hand to the principal along with an itemised schedule, retaining a duplicate schedule signed by the principal as a receipt.

ABA20220988
APPROVED - Site Copy
Hastings District Council
20/09/2022

3155FR FIRTH RIBRAFT® FLOOR SYSTEMS

1 GENERAL

This section relates to the supply and installation of **Firth Industries** RibRaft® floor system and RibRaft® X-Pod® floor system.
It includes:

- a specific design reinforced concrete waffle raft floor slab-on-ground RibRaft® X-Pod® floor system.

1.1 ABBREVIATIONS AND DEFINITIONS

The following definitions apply specifically to this section:

ACRS	Australian Certification Authority for Reinforcing Steels - An independent certification scheme for reinforcing steel and structural steel, by product and manufacturer/processor. Certifies compliance with Australia/New Zealand Standards. ACRS Web site - www.steelcertification.com

Documents

1.2 DOCUMENTS

The following documents are specifically referred to in this section:

NZBC B1/VM1	Structure
NZBC B1/AS1	Structure
NZS 3109	Concrete construction
NZS 3604	Timber-framed buildings

Documents listed above and cited in the clauses that follow are part of this specification. However, this specification takes precedence in the event of it being at variance with the cited document.

1.3 MANUFACTURER/SUPPLIER DOCUMENTS

Manufacturer and supplier documents relating to this part of the work:
Firth RibRaft® Floor System Manual **
Firth RibRaft® X-Pod® Brochure (Introductory brochure)
Firth RibRaft® X-Pod® Structural Design Guide

** A copy of this manual must be held on site.

Manufacturer/supplier contact details

Company:	**Firth Industries**
Web:	www.firth.co.nz
Email:	info@firth.co.nz
Telephone:	0800 FIRTH1 (0800 347841)

Further information and/or names of tradespeople who have installed Firth RibRaft® floors are available by phoning Firth Information Service 0800 347841.

Requirements

1.4 NO SUBSTITUTIONS

Substitutions are not permitted to any specified Firth RibRaft® Floor System and Firth RibRaft® X-Pod® Floor System product or component, or associated Firth products.
Concrete used for the construction of Firth RibRaft® Floor System and Firth RibRaft® X-Pod® Floor Systems must be supplied by Firth. RibRaft® & RibRaft® X-Pod® formers are only available from Firth Industries and are only supplied on a project with confirmation of an order for Firth Concrete.

1.5 QUALIFICATIONS

Tradespeople to be competent, experienced, and familiar with the Firth RibRaft® Floor System and Firth RibRaft® X-Pod® Floor System materials and techniques specified.

1.6 STEEL REINFORCING COMPLIANCE

Steel reinforcing materials for concrete. Steel to be manufactured in New Zealand, or by an overseas manufacturer holding a current valid (or equivalent) NZ S Mark or ACRS certificate for that type of steel. Confirm compliance and provide evidence if requested.

ABA20220988
APPROVED - Site Copy
Hastings District Council
20/09/2022

1.7 QUALITY RECORDS

Keep accurate records relating to strength and quality of materials used during construction. Include records of workmanship during construction and photographs of as-built details. Make the information available to the Building Consent Authority inspector on request.

2 PRODUCTS

Materials

2.1 BLINDING

50mm maximum compacted GAP 7.

2.2 TIMBER FORMWORK

No. 2 framing and dressing or merchantable grade radiata pine boards.

2.3 DAMP-PROOF MEMBRANE

0.25mm minimum polyethylene.

2.4 NORMAL CONCRETE - NON RIBRAFT® APPLICATIONS

Normal concrete 20 MPa grade, maximum aggregate size 19mm for concrete work where Firth Raftmix™ or Firth Raftmix™ Pump are not appropriate

2.5 REINFORCEMENT

Bars to comply. Grade 500E deformed, other than for ties, stirrups, and spirals, unless shown otherwise on the drawings.

2.6 TYING WIRE

Mild drawn steel wire not less than 1.2mm diameter.

Materials – RibRaft® X-Pod® Floor System

2.7 POLYPROPYLENE POD FORMERS – RIBRAFT® X-POD FLOOR SYSTEM

Firth RibRaft® X-Pod® proprietary, black recycled polypropylene 215mm high pods to form 300mm slab with concrete topping.
Four pod options are available: RibRaft® X-Pod® 215/750 to form 100mm ribs at 750mm centres, RibRaft® X-Pod® 215/1500 to form 100mm ribs at 1500mm centres, and adjustable pods RibRaft® X-Pod® ADJ 215/150.400 to fill voids from 150-400mm and RibRaft® X-Pod® ADJ 215/450.700 to fill voids from 450-700mm when combined with RibRaft® X-Pod® ADJ 215/150.400.

2.8 KEYSTONE CLIPS – RIBRAFT® X-POD FLOOR SYSTEM

Firth RibRaft® X-Pod® proprietary Keystone clips, constructed from polypropylene.

2.9 MESH, CLASS E – RIBRAFT® X-POD® FLOOR SYSTEM

Welded reinforcing mesh as modified by NZS B1/VM1, Class E to NZBC B1/AS1 - Grade 500E, 2.27kg/m2 (1.14kg/m² in each direction), minimum SE62 500E mesh or the equivalent. Refer to SELECTIONS for details.

2.10 CONCRETE 25MPa - RIBRAFT® X-POD® FLOOR SYSTEM

Firth X-Pod® Raftmix25, a 25 Mpa 100mm slump mix in either 13mm or 19mm nominal aggregate size, supplied by Firth Industries. Firth X-Pod® Raftmix™ for direct placement and Firth X-Pod® Raftmix™ Pump for pump applications.

3 EXECUTION

Application -General

3.1 SITE CLEARANCE

Clear the slab area of any vegetation and topsoil down to the subgrade level.

3.2 BUILDING PLATFORM

Create a building platform to a level surface to the required depth below finished floor level to suit the RibRaft® or RibRaft® Xpod system. Cut and/or fill sloping sites. Confirm finished floor level.

ABA20220988
APPROVED - Site Copy
Hastings District Council
20/09/2022

3.3 TEMPORARY BUILDING PLATFORM DRAINAGE

Construct suitable drainage to keep excessive ground water off the building platform during and after construction as required.

3.4 GRAVEL RAFT

Place gravel raft, systematically spread and mechanically compact in layers in accordance with the engineer's requirements, to the extent specified by the engineer.

3.5 BLINDING LAYER

Spread GAP 7 blinding layer to a minimum 500mm past the outside edge of the slab, compact to a level layer no greater than 50mm thick and no higher than 305mm below finished floor level.

3.6 FORMWORK

Construct formwork as required, well braced, and tied to remain in position, straight and plumb during construction. Ensure formwork will provide for the topping depth, including rebates and the required concrete finish.

3.7 INSTALL DAMP-PROOF MEMBRANE

Apply DPM to the prepared basecourse extending to the outside of all edge beams or fold and staple up the inside of the formwork. Overlap all joints in the DPM sheets a minimum 150mm. Tape laps and penetrations with 50mm wide pressure sensitive plastic tape. Ensure DPM is not damaged during the construction process. Repair all damage to DPM before proceeding with following procedures.

Application - RibRaft® X-Pod® floor system

3.8 PIPED SERVICES – BELOW SLAB INSTALLATION

Ensure piped and cabled services are installed in the subsoil or hardfill under the Firth RibRaft® X-Pod® & returned vertically, at right angles, through the X-Pod® and concrete floor slab, in locations as shown on the drawings and according to Firth RibRaft® X-Pod® floor system requirements. All service pipes in contact with concrete shall be lagged with a minimum of 6mm thick, compressible, impermeable material.
Ensure service pipes are not run length-ways within any concrete rib or edge beam or penetrate vertically through an edge beam without specific detailing.

3.9 PLACE POLYPROPYLENE PODS

Place Firth RibRaft® X-Pod® pods in the grid and module pattern as shown on the specific design drawings and in accordance with Firth requirements. Ensure pods are accurately positioned and aligned, to straight and true lines, then secure adjacent X-Pod's with X-Pod® Keystone Clips.
Cut X-Pod formers with grinder on site as required: RibRaft® X-Pod® ADJ adjustable pods to required widths and X-Pod® heights to form slab set downs, in accordance with specific design drawings and Firth requirements. Cut holes as required for services penetration holes.
Where required cut height of X-Pod's to suit slab set downs in accordance with Firth RibRaft® X-Pod® Floor System Manual. Install DPM tape or foam tape to X-Pod cut edges.

3.10 PLACE REINFORCING STEEL

Place reinforcing steel to all ribs and perimeter edge beams in accordance to specific design drawings.

3.11 CUT AND BEND REINFORCING STEEL

Cut and bend bars using proper bending tools to avoid notching and to the requirements. Do not rebend grade 500E bars.

3.12 LAPPED SPLICES

Lap length and locations only as indicated on the specific design drawings. Tie all lapping bars to each other. Plain bars lapped splices must be hooked.

ABA20220988
APPROVED - Site Copy
Hastings District Council
20/09/2022

3.13 REINFORCEMENT COVER

For in-situ concrete and foundations the reinforcement cover to be, in accordance with NZS 4229:

Location, cover to:	
Footing, to earth	75mm
Footing, to DPM	50mm
Foundation, to edge	75mm
Slab, to slab top	30mm
Slab, to slab edge	50-75mm

3.14 PLACE REINFORCING MESH

Place reinforcing mesh over the pods. Mesh shall be lapped in accordance, lap one mesh square plus 50mm minimum (do not count bar extension beyond the outermost wire). Support mesh on upstands provided in the corners of RibRaft® X-Pod® pods.

Application - General

3.15 TOPPING SLAB DEPTH

Refer to SELECTIONS for required topping slab depth.

3.16 PRE-PLACEMENT INSPECTION

Arrange for excavations, formwork and reinforcement to be inspected and passed by the Building Consent Authority.

3.17 EQUIPOTENTIAL BONDING REINFORCING

If it is a project requirement, ensure that reinforcing is electrically equipotential bonded (or at least conductor cable attached) before the concrete is poured. For bonded reinforcing ensure all reinforcing is interconnected with good contact at joints and tight conductive ties.

3.18 CONCRETE PLACEMENT AND COMPACTION

Ensure the rib and edge beam canals are clean, free of debris. Pour the floor in a single pour using only Firth Raftmix™, Firth X-Pod® Raftmix™, Firth Raftmix™ Pump or Firth X-Pod® Raftmix Pump concrete and ensuring that the pods remain in position during placing. Pour concrete onto the top of each pod prior to filling the ribs around the pod to help prevent them from floating and lifting.

Use Firth Raftmix™ or Firth X-Pod® Raftmix™ for placement in the floor directly from the concrete truck chute or Firth Raftmix™ Pump or Firth X-Pod® Raftmix™ Pump concrete for placement in the floor by concrete pump.

Compact concrete using a suitable poker vibrator for the ribs and ground beams and into all corners of the formwork. Screed as required. Confirm levels with a laser level.

3.19 CONCRETE FINISHING

Float and trowel to provide a U3 finish.

3.20 CONCRETE CURING

Curing of the concrete slab must take place immediately after finishing the concrete by one of the following curing methods:

- ponding or continuous sprinkling of water
- placing a wet covering or plastic membrane over the slab

3.21 SHRINKAGE CONTROL JOINTS

Cut shrinkage control joints as shown on the plans after hardening to a depth of 25mm within 24 hours in summer or 48 hours in winter.

Where shrinkage control joints have not been shown on the plans, position the shrinkage control joints to coincide with major changes in the floor plan. Agree position of shrinkage control joints with the designer.

Bay dimensions formed by the shrinkage control joints to be limited to a maximum ratio of length to width of 2 to 1 with a maximum dimension of 6 meters. Place the shrinkage control joints over the 100mm wide internal ribs wherever possible. Where a shrinkage control joint runs along the line of a 300mm wide loadbearing rib, locate the cut directly above one edge of the 300mm rib.

ABA20220988
APPROVED - Site Copy
Hastings District Council
20/09/2022

3.22 CLEAN OUT SHRINKAGE CONTROL JOINTS

Clean out control joints. If required fill with suitable flexible sealant.

Application - other concrete work

3.23 PLACE HARDFILL

Place hardfill and ensure it is spread and compacted with mechanical compaction.

3.24 PLACE CONCRETE

Do not place fresh concrete against the preceding layer after more than 45 minutes, or such lesser time as required by the circumstances, to NZS 3109.

3.25 SCREED THE SURFACE

Screed the concrete surface by straight edge or vibrating screed immediately after compaction and to tolerances in NZS 3109.

3.26 CONCRETE FINISHING

Screed and provide a U3 finish.

Finishing

3.27 STRIKE FORMWORK

Strike formwork after at least 12 hours after the slab has been finished without damaging or overloading structure.

3.28 SURFACE DEFECTS

Make good surface defects immediately after forms are stripped. Make good hollows or bony areas with suitable patching mortar, finished to the same tolerances as the parent concrete. Fill any tie rod holes with 1:2 mortar.

4 SELECTIONS

For further details on selections go to www.firth.co.nz.
Substitutions are not permitted to the following, unless stated otherwise.

Materials

4.1 GRAVEL RAFT

Location:	Reinforced slab
Type:	Engineer to specify required gravel raft for specific project.
Depth:	300mm

4.2 DAMP-PROOF MEMBRANE

Location:	polyethylene DPM
Thickness:	0.25mm minimum

4.3 NORMAL CONCRETE

Location:	Use normal concrete for non-RibRaft construction including paths and driveways
Concrete mix:	Firth 20MPa
Thickness:	100mm minimum
Mesh:	as required

Materials - RibRaft® X-Pod® Floor System

4.4 FIRTH RIBRAFT® X-POD® FLOOR SYSTEM

Brand:	Firth RibRaft® X-Pod Floor System
Size:	RibRaft® X-Pod® 215/750, RibRaft® X-Pod® ADJ 215/150.400 & RibRaft® X-Pod® ADJ 215/450.700
Concrete mix:	FirthX-Pod® Raftmix25, 25MPa
Topping thickness:	85mm
Mesh:	Class E, Grade 500E, minimum SE62 or equivalent

ABA20220988
APPROVED - Site Copy
Hastings District Council
23/09/2022

Finishing

4.5 CONCRETE SURFACE FINISH - FLOORS

Location: Reinforced slab
Finish class: U3 (interior)

ABA20220988
APPROVED - Site Copy
Hastings District Council
20/09/2022

3813F FUTUREBUILD® NZ - LVL STRUCTURAL FRAMING

1 GENERAL

This section relates to the supply and installation of Futurebuild engineered wood products including:

- hy90®
- hyONE®

Documents

1.1 DOCUMENTS

The following documents are specifically referred to in this section:

NZBC B1	Structure
NZS 3604	Timber-framed buildings

Documents listed above and cited in the clauses that follow are part of this specification. However, this specification takes precedence in the event of it being at variance with the cited document.

1.2 MANUFACTURER'S DOCUMENTS

Futurebuild LVL documents relating to work in this section are:

- Futurebuild LVL Residential Design Guide
- Product Technical Statement - Futurebuild LVL Products specified for Residential Applications through software and literature
- Product Technical Statement - Futurebuild LVL Products: General/Specific Design
- designIT Software which includes installation details, Design Certificate and Producer Statement

Copies of the above literature and software are available from Futurebuild LVL.

Web:	www.futurebuild.co.nz
Email:	info@futurebuild.co.nz
Telephone:	0800 808 131 (Customer Services), 0800 585 244 (Technical)

Requirements

1.3 NO SUBSTITUTIONS

Substitutions are not permitted to any specified Futurebuild engineered wood products or associated components or accessories. The structural properties of other manufactures LVL products may not be comparable.

1.4 QUALIFICATIONS

Carry out the installation of the structural LVL work with experienced and competent trades people familiar with the materials and techniques specified.

1.5 CO-ORDINATION

Refer to all drawings to ensure details and fixings required are provided for in the structural LVL work.

2 PRODUCTS

Materials - laminated veneer lumber

2.1 HYONE LINTELS & BEAMS

High stiffness structural LVL lintels and beams.

2.2 HY90 LINTEL

Structural LVL lintels and beams manufactured to the requirements.0

Components

2.3 STEEL STRAPS

Mild steel galvanized steel straps to suit application, 27mm x 0.6mm, 25mm x 0.8mm and 25mm x 1.0mm.

ABA20220988
APPROVED - Site Copy
Hastings District Council
20/09/2022

3 EXECUTION

Conditions

3.1 DELIVER AND HANDLE

Deliver and handle members so no structural damage occurs, corners and edges are not damaged, or surfaces marked or stained.

3.2 HANDLING

Handle LVL with nylon strops or similar to prevent damage.

3.3 STORE

Stack on level bearers, 150mm minimum clear of the ground. Store under cover to keep dry prior to installation.

3.4 DEFECTS

Discard material showing visual defects affecting its structural integrity.

3.5 ERECTION GENERALLY

Carry out the erection of LVL and associated support framing for houses and similar structures to the requirements of NZS 3604. Comply with NZBC B1/VM1. Refer to Futurebuild guidelines for the installation of LVL structural framing. Reseal cut ends, holes, notches and the like of treated LVL with a brush on solvent based preservative. Prop long length beams and lintels at the mid span until the moisture content has reached a suitable level for the application of internal linings.

Application - hy90 & hyONE

3.6 ERECTION GENERALLY

Lift, place and fix hy90 or hyONE without overstressing or deformation. Use temporary supports as needed without causing damage. Fix hy90 or hyONE to NZS 3604 and to Futurebuild LVL requirements. Ensure all members are correctly located, plumb and true to line and face.

3.7 LINTEL END CONNECTIONS

To hy90 and hyONE Lintels for residential construction - Information for design and installation for lintel end connections and cantilevered lintel connections construction details and to NZS 3604 and/or designIT for houses software for trimming stud connections and tie down where required for uplift.

Completion

3.8 REPLACE

Replace or repair damaged elements.

3.9 REMOVE

Remove debris, unused materials and elements from the site.

3.10 LEAVE

Leave work to the standard required by following procedures.

4 SELECTIONS

Substitutions are not permitted to the following, unless stated otherwise.

4.1 HY90® LINTELS

Location:	Refer to sheet 4
Type/size:	hy90 150mm / 200mm x 90mm
Treatment	H1.2

4.2 HYONE® LINTELS / BEAMS

Location:	Garage
Size/Grade:	360mm x 90mm hyONE
Treatment	H1.2

ABA20220988
APPROVED - Site Copy
Hastings District Council
20/09/2022

3820 CARPENTRY

1 GENERAL

This section relates to the supply and erection of timber framing, as a framed structure, or as partitioning. It includes prefabricated timber and engineered wood.

1.1 DOCUMENTS

The following documents are specifically referred to in this section:

NZBC B2/AS1	Durability
NZS 3602	Timber and wood-based products for use in building
NZS 3604	Timber-framed buildings
FTMA CoP	Frame and Truss Manufacturers Association Code of Practice

***A copy of** NZS 3604 **Timber-framed buildings, must be held on site.**

1.2 QUALIFICATIONS

Workers to be experienced, competent trades people familiar with the materials and techniques specified.

1.3 DIMENSIONS

All timber sizes except for battens are actual minimum dried sizes.

2 PRODUCTS

2.1 TIMBER FRAMING, TREATED

Species, grade and in service moisture content to NZS 3602, NZBC B2/AS1 and treatment to NZBC B2/AS1. Structural grade (SG) to NZS 3604.

2.2 LAMINATED TIMBER

Radiata pine laminations treated as required by NZS 3602, to the requirements of NZBC B2/AS1. Supply weather resistant sealed.

2.3 TIMBER TRUSSES

To FTMA CoP. Moisture content 16% at supply.

Components

2.4 NAILS

Type to NZS 3604 and of the size and number for each particular types of joint as laid down in the nailing schedules.

2.5 BOLTS AND COACH SCREWS

Bolts and coach screws complete with washers, to the requirements and of the type, number and form required for each particular junction to NZS 3604.

2.6 NAIL PLATES

Comply with the requirements of NZS 3604 and of the number and form required for each particular junction. Plates to the plate manufacturer's design for the particular locations as shown on the drawings.

2.7 CONNECTORS

Comply with the requirements of NZS 3604 and of the number and form required for each particular junction. Connectors and structural brackets to the connector manufacturer's design for particular locations shown on drawings.

2.8 CORROSION RISKS

For interior timber, treated with copper-based timber preservatives (H3.2 or higher), use a minimum of hot-dipped galvanized steel fixings and fasteners.

For exterior timber, timber in damp areas and timber subject to occasional wetting, use only stainless steel (or equivalent) fixings and connectors, when the timber is treated with; Copper Azole (CuAz, Preservative code 58), Alkaline Copper Quaternary (ACQ, Preservative code 90), Micronise Copper Azole (code 88) or Micronised Copper Quaternary (code 89).

© CIL Masterspec Jul 2022

ABA20220988
APPROVED - Site Copy
Hastings District Council
20/09/2022

3 EXECUTION

3.1 EXECUTION GENERALLY

To NZS 3604 except as varied in this specification. Execution to include those methods, practices and processes contained in the unit standards for the National Certificate in Carpentry and the National Certificate in Joinery (cabinetry, exterior joinery, stairs).

3.2 SEPARATION

Separate all timber framing timbers from concrete, masonry and brick by: -

- a full length bituminous damp-proof membrane overlapping timber by at least 6mm; or
- a 12mm minimum free draining air space

3.3 ATTENDANCE

Provide and fix blocks, nogs, openings and other items as required by other trades.

3.4 MOISTURE CONTENT

Maximum allowable equilibrium moisture content (EMC) for non air-conditioned or centrally heated buildings for framing to which linings are attached.

Framing at erection:	24% maximum
Framing at enclosure:	20% maximum
Framing at lining:	16% maximum

3.5 SET-OUT

Set out framing in accordance with the requirements of NZS 3604 and as required to support sheet linings and claddings. When necessary provide framing to suit any required cladding/lining control joints and sheet joints.

3.6 FRAMING WALLS

Frame to required loading and bracing complete with lintels, sills and nogs, all fabricated and fastened to NZS 3604.

3.7 FRAMING ROOFS

Frame to required loading and bracing complete with valley boards, ridge boards and purlins. Design and fit roof trusses complete with anchorage. All fabricated and fastened to NZS 3604.

3.8 FRAMING CEILINGS

Frame to required loading and bracing complete with runners and battens set out to support ceiling lining. All fabricated and fastened to NZS 3604. Trim for openings in ceilings and hatches.

4 SELECTIONS

4.1 EXTERIOR WALL FRAMING - RADIATA PINE

Member	Species	Grade	Treatment
Exterior walls:	Radiata pine	SG10	H1.2

4.2 ROOF FRAMING - RADIATA PINE

Member	Species	Grade	Treatment
Trusses:	Radiata pine	SG8	H1.2
Battens:	Radiata pine	SG8	H1.2
Ceiling joists and battens:	Radiata pine	SG8	H1.2
Valley boards:	Radiata pine	Merchantable	H1.2

4.3 INTERIOR FRAMING - RADIATA PINE

Member	Species	Grade	Treatment
Non structural walls:	Radiata pine	SG8	H1.2
Structural and braced walls:	Radiata pine	SG8	H1.2

ABA20220988
APPROVED - Site Copy
Hastings District Council
20/09/2022

4161 UNDERLAYS, FOIL AND DPC

1 GENERAL

This section relates to the application of:

- DPC/DPM
- roofing underlays includes kraft based and synthetic roof underlays
- accessories

1.1 ABBREVIATIONS AND DEFINITIONS

The following abbreviations apply specifically to this section:

NZMRM	New Zealand Metal Roofing Manufacturers Inc.
R2	Roof underlay Kraft/bituminous based Self-supporting

The following definitions apply specifically to this section:

Wall underlay	the same meaning as defined in NZBC E2/AS1, covering kraft based and synthetic wall underlays, sometimes called, wall wraps, building wraps or building papers.

Documents

1.2 DOCUMENTS

The following documents are specifically referred to in this section:

NZBCE2/AS1	External moisture
NZS 3604	Timber-framed buildings
NZMRM CoP	NZ Metal Roof and Wall Cladding Code of Practice

Requirements

1.3 INSTALLATION SKILL LEVELS

Installers to be familiar with the manufacturer's technical literature and the NZMRM CoP NZ Metal Roof and Wall Cladding Code of Practice.

2 PRODUCTS

Materials

DPC

2.1 BITUMINOUS IMPREGNATED DPC

Heavy Kraft impregnated with high grade bitumen and coated with higher heat resistant bitumen to the appropriate test methods.

DPM

2.2 DAMP PROOF MEMBRANE - CONCRETE FLOOR

Polyethylene sheet with minimum thickness of 0.25mm to NZS 3604.

Rigid Wall Underlays

2.3 RIGID WALL UNDERLAYS

Plywood or fibre cement sheet over-fixed with flexible wall underlay to E2/AS1.

Roofing Underlay

2.4 BITUMINOUS SELF-SUPPORTING ROOFING UNDERLAY (R2)

Self supporting roofing underlay.

Accessories

ABA20220988
APPROVED - Site Copy
Hastings District Council
20/09/2022

2.5 WINDOW DOOR SEALING SYSTEM

Proprietary window and door flashing tape and accessories to E2/AS1.

2.6 GUTTER AND UNDER FLASHINGS

Bituminous breather type underlay cut to width by manufacturer for use under valley, apron flashing and internal gutters. Soffit liner cut to width from bituminous breather type underlay.

2.7 ADHESIVE TAPE

Adhesive tapes to compliment the underlay. Pressure sensitive tapes for joining foil insulation and vapour barriers.

3 EXECUTION

Conditions

3.1 GENERAL REQUIREMENTS

To NZBC E2/AS1 and manufacturers technical literature.
Note: Care should be taken not to expose the underlay to continuous wet and windy conditions.

3.2 STORAGE

Store wall and roofing underlays and accessory materials, under conditions that ensure no deterioration or damage. Store rolls in an upright position on a smooth floor and protected from sunlight, UV radiation and moisture.

3.3 INSPECTION

Before starting work, check that the framing will allow work of the required standard. Carry out remedial work identified before laying underlay.

Application - DPC

3.4 BITUMINOUS DPC TO TIMBER

Lay bituminous DPC under timber of all timber framed walls on concrete, in a single layer with 50mm overlaps at joints to provide a waterproof barrier.
NOTE: Do not use bituminous DPC under LOSP treated timber.

3.5 DPC BETWEEN DISSIMILAR MATERIALS

Lay DPC between dissimilar materials where required.

Application - DPM

3.6 DPM TO CONCRETE FLOOR

Lay DPM under concrete floor substrate over sand binding, in a single layer with 150mm overlaps at joints to provide a waterproof barrier.

Application - Roofing Underlay

3.7 ROOF UNDERLAY

Lay horizontally across the rafter/trusses starting at the gutter line with succeeding sheets in true alignment and lapping 150mm. Scribe around and fit neatly to all penetrations. Avoid prolong exposure by installing the roof immediately. UV exposure to manufacturers requirements, maximum 7 days.

3.8 GUTTER AND UNDER FLASHINGS

Lay bituminous breather type underlay cut to width by manufacturer for use as an underlay to valley, apron flashings, internal gutters and soffit liner. Lap under flashings with adjoining underlays. Fix soffit liner from top plate down 150mm past ribbon plate.

Completion

3.9 CLEAN UP

Clean up as the work proceeds.

3.10 LEAVE

Leave work to the standard required by following procedures.

ABA20220988
APPROVED - Site Copy
Hastings District Council
20/09/2022

3.11 REMOVE

Remove debris, unused materials and elements from the site.

4 SELECTIONS

4.1 DPC

Brand / type:	Pink Batts / Malthoid bituminous kraft membrane

4.2 DPM - CONCRETE FLOOR

Brand / type:	Permathene / polyethylene DPM
Thickness:	0.25mm
Jointing tape:	Manufacturer

4.3 ROOFING UNDERLAY

Brand / type:	Thermakraft 215 / bituminous self supporting roofing underlay (R2)
Jointing tape:	Manufacturer

Accessories

4.4 WINDOW/DOOR SEALING SYSTEM

Brand / type:	Super-Stick Building Tape® - Marshall Innovations or 3M™ All Weather Flashing Tape 8067

ABA20220988
APPROVED - Site Copy
Hastings District Council
20/09/2022

4171HR JAMES HARDIE® RIGID AIR BARRIERS

1 GENERAL

This section relates to the supply and fixing of James Hardie® rigid air barrier products;

- HomeRAB™ Pre-Cladding

Documents

1.1 DOCUMENTS

The following documents are specifically referred to in this section:

NZBC E2/AS1	External moisture
NZS 3604	Timber-framed buildings

1.2 MANUFACTURER/SUPPLIER DOCUMENTS

Manufacturer's and supplier's documents relating to this part of the work:
HomeRAB™ Pre-Cladding and RAB™ Board Installation Manual by James Hardie®
Bracing Design Manual by James Hardie®
BRANZ Appraisal 611 - James Hardie® HomeRAB™ Pre-Cladding and RAB™ Board
BRANZ Appraisal 846 - SUPER-STICK Flexible Flashing Tape

Manufacturer/supplier contact details

Company:	James Hardie New Zealand Limited
Web:	www.jameshardie.co.nz
Email:	info@jameshardie.co.nz
Telephone:	Ask James Hardie™ on 0800 808 868.

Warranties

1.3 WARRANTY - MANUFACTURER/SUPPLIER

Provide a material manufacturer/supplier warranty:

15 years:	For HomeRAB™ Pre-Cladding and RAB™ Board (refer to James Hardie® product warranty)
15 years:	For accessories supplied by James Hardie® (refer to James Hardie® product warranty)
From:	Date of purchase

- Provide this warranty on the manufacturer's standard form.

Requirements

1.4 QUALIFICATIONS

Workers / Installers / applicators to be experienced, competent trades people familiar with the materials and techniques specified.

1.5 SAFE WORKING

To James Hardie® requirements for safe working practices with James Hardie® products, particularly with regards to cutting and drilling.

1.6 NO SUBSTITUTIONS

Substitutions are not permitted to any specified system, or associated components and products.

Performance - Wind

1.7 PERFORMANCE, WIND

The design wind pressures are to NZS 3604, up to and including Very High Wind Zone. This is within the scope of the manufacturer's literature and details.

Performance - Bracing

ABA20220988
APPROVED - Site Copy
Hastings District Council
20/09/2022

1.8 BRACING REQUIREMENTS

Provide the HomeRAB™ PreCladding/RAB™ Board bracing system. Refer to Bracing Desig Manual for selection.

2 PRODUCTS

Materials

2.1 HOMERAB PRE-CLADDING

Hardie™ HomeRAB™ Pre-Cladding, 4.5mm thick, manufactured from treated cellulose fibre Portland cement, sand and water, face and edge sealed.

Components

2.2 FASTENER TYPE

Fasteners to minimum durability requirements of the NZBC. Refer to NZS 3604, for requirements for fixing's material to be used in relation to the exposure conditions.

Refer to NZBC E2/AS1, material selection, and compatibility of materials in contact, for selection of suitable fixing materials and their compatibility with other materials.

Zone	Fixings Material
Zone D, Zone E	Grade 316 Stainless
Zone B, Zone C	Hot-dipped galvanized or Grade 316 Stainless

2.3 GALVANIZED NAILS

Hot-dip galvanized nails to James Hardie® requirements. Refer to SELECTIONS.

2.4 STAINLESS STEEL NAILS

316 Stainless Steel nails to James Hardie® requirements. Refer to SELECTIONS.

2.5 HORIZONTAL FLASHING - HOMERAB™ PRE-CLADDING

HomeRAB™ 4.5 Horizontal Flashing (uPVC) for horizontal joints.

Accessories

2.6 SEALING TAPE - VERTICAL JOINTS/CORNER JOINTS

SUPER-STICK Building Tape® (75mm wide) or Thermakraft™ Premium Jointing Tape.

2.7 FLASHING TAPE / WINDOW FLASHING TAPE

SUPER-STICK Building Tape® or 3M™ All Weather Flashing Tape 8067 or Thermaflash Flashing Tape.

2.8 BRACING ELEMENT HOLD DOWN - CONCRETE FLOOR

Ramset bracing anchor kit Concrete or GIB Handibrac® with 15kN anchor to suit brace type.

3 EXECUTION

Conditions

3.1 STORAGE

Take delivery of products dry and undamaged on pallets, and keep on pallet. Protect edges and corners from damage and covered to keep dry until fixed.

3.2 HANDLING

Avoid distortion and contact with potentially damaging surfaces. Do not drag sheets across each other, or across other materials. Protect edges, corner and surface finish from damage.

3.3 PRE-INSTALLATION REQUIREMENTS

Check work previously carried out and confirm it is of the required standard for this part of the work.

ABA20220988
APPROVED - Site Copy
Hastings District Council
20/09/2022

3.4 FRAMING - HOMERAB™ PRE-CLADDING

Provide framing plumb, level, in true alignment and in accordance with NZS 3604 requirements. Stud and nog spacing must not exceed James Hardie® requirements. Moisture content of timber framing must not exceed the requirements specified by NZS 3602 to minimise shrinkage and movement after sheets are fixed.

Application - particular installations

3.5 BRACING SYSTEM HOMERAB™ PRE-CLADDING

Fix sheets in accordance with the Bracing Design Manual by James Hardie®. Refer to the bracing manual bracing table for specific requirements.

Application - generally

3.6 PENETRATIONS AND FLASHINGS

Confirm that exterior wall openings have been prepared ready for the installation of all window and door frames and other penetrations through the cladding. Required preparatory work includes the following:

- Openings formed in accordance with the HomeRAB™ Pre-Cladding and RAB™ Boar Installation Manual by James Hardie® .
- Materials lapped in a way that water tracks down to the exterior face of the Rigid Air Barrier.
- Underlay / tapes to openings finished and dressed off ready for the installation of window and door frames and other penetrations.
- Required holes in cladding accurately formed and cut to James Hardie® requirements, ensure (if required) services penetration grommets/sleeves/seals/tapes are in place prior to cladding installation.

3.7 CUT EDGES

Cut edges where exposed (not covered by uPVC flashing, flashing or sealing tape) must be primed prior to installation. Refer to SELECTIONS for primer.

Install Rigid Air Barriers

3.8 SHEET LAYOUT

Refer to the HomeRAB™ Pre-Cladding and RAB™ Board Installation Manual by James Hardie® fo sheet layouts to suit general installations.

3.9 VERTICAL JOINTS

Join sheets to the HomeRAB™ Pre-Cladding and RAB™ Board Installation Manual by James Hardie®.

3.10 HORIZONTAL JOINTS

Join sheets to the HomeRAB™ Pre-Cladding and RAB™ Board Installation Manual by James Hardie®.

3.11 EXTERNAL AND INTERNAL CORNERS

Form in accordance with the HomeRAB™ Pre-Cladding and RAB™ Board Installation Manual b James Hardie®, using a 75mm minimum wide sealing tape.

3.12 FIXING SHEETS

Fix in accordance with the HomeRAB™ Pre-Cladding and RAB™ Board Installation Manual b James Hardie® with the sealed face towards the external cladding and unsealed face towards the framing. Fix sheets to suit installation requirements for general fixing, bracing and fire rating requirements. Refer to SELECTIONS for fixing type. Use hand-driven nailing for fixing bracing sheets.

3.13 PENETRATIONS

Form in accordance with the HomeRAB™ Pre-Cladding and RAB™ Board Installation Manual b James Hardie®.

3.14 OPENINGS

Form in accordance with the HomeRAB™ Pre-Cladding and RAB™ Board Installation Manual b James Hardie®. Exposed timber framing around window, door, meter box and other penetrations must be covered with a 150mm wide minimum flashing tape or sealing tape. Flashing tapes must be lapped over the HomeRAB™ Pre-Cladding or RAB™ Board by 50mm minimum

ABA20220988
APPROVED - Site Copy
Hastings District Council
20/09/2022

3.15 FLASHINGS AND JUNCTIONS

Form in accordance with the HomeRAB™ Pre-Cladding and RAB™ Board Installation Manual by James Hardie®. Install flashing tape over any flashings and at all junctions with other materials or building elements.

3.16 AT SOFFITS

Form in accordance with the HomeRAB™ Pre-Cladding and RAB™ Board Installation Manual by James Hardie®.

3.17 BASE CLEARANCES

Form in accordance with the HomeRAB™ Pre-Cladding and RAB™ Board Installation Manual by James Hardie®. Lining is required to extend below the bottom plate / floor joist by 15mm minimum to form a drip edge and must finish a minimum 100mm clear of finished ground. Where base of sheets are cut to suit site requirements seal the bottom edge with primer.

Completion

3.18 ROUTINE CLEANING

Carry out routine trade cleaning of this part of the work including periodic removal of all debris, unused and temporary materials and elements from the site.

3.19 REPLACE

Replace all damaged or marked elements.

3.20 LEAVE

Leave work to the standard required for following procedures.

3.21 REMOVE

Remove debris, unused materials and elements from the site.

4 SELECTIONS

For further details on selections go to www.jameshardie.co.nz
Substitutions are not permitted to the following, unless stated otherwise.

4.1 HOMERAB™ PRE-CLADDING - RIGID AIR BARRIER 4.5MM

Brand/type:	Hardie™ HomeRAB™ Pre-Cladding
Sheet length	2750mm
Sheet thickness:	4.5mm
Nails:	40 x 2.8mm hot dipped galvanized Hardie™ Flex nails Where the cladding is expected to meet 50 year durability, HomeRAB™ Pre-Cladding must be fixed with stainless steel nails.
Primer:	Dulux® 1 Step, Resene Quick Dry to exposed cut edges

4.2 HOMERAB™ PRE-CLADDING - BRACING SYSTEMS

Refer to James Hardie® Bracing Design Manual. For bracing element location refer to drawn documentation.

ABA20220988
APPROVED - Site Copy
Hastings District Council
20/09/2022

4231HL JAMES HARDIE® LINEA™ CLADDING

1 GENERAL

This section relates to the supply and fixing of the following fibre cement products:

- Hardie™ Linea™ Weatherboard claddin(

Documents

1.1 DOCUMENTS

The following documents are specifically referred to in this section:

NZBC E2/AS1	External moisture
NZBC E2/VM1	Weathertightness
NZS 3604	Timber-framed buildings

1.2 MANUFACTURER/SUPPLIER DOCUMENTS

James Hardie® documents relating to this part of the work:
Linea™ Weatherboard Technical Specification
BRANZ Appraisal 447 - Linea™ Weatherboard Cavity Cladding

Manufacturer/supplier contact details

Company:	James Hardie New Zealand Limited
Web:	www.jameshardie.co.nz
Email:	info@jameshardie.co.nz
Telephone:	Ask James Hardie™ on 0800 808 868

BRANZ appraisal is available at www.branz.co.nz.

Warranties

1.3 WARRANTY - MANUFACTURER/SUPPLIER - LINEA™ WEATHERBOARD

Provide a material manufacturer/supplier warranty:

25 years:	For Linea™ Weatherboard product (refer to James Hardie® product warranty)
15 year:	For accessories supplied by James Hardie® (refer to James Hardie® product warranty)
From:	Date of purchase

- Provide this warranty on the manufacturer's standard form.

Requirements

1.4 QUALIFICATIONS - NON-CODEMARK INSTALLATION

Workers / Installers / applicators to be experienced, competent trades people familiar with the materials and techniques specified.

1.5 NO SUBSTITUTIONS

Substitutions are not permitted to any specified system, or associated components and products.

1.6 SAFE WORKING

To James Hardie® requirements for safe working practices with James Hardie® products, particularly with regards to cutting and drilling.

1.7 INFORMATION FOR OPERATION AND MAINTENANCE

Provide relevant James Hardie® maintenance requirements at completion of the work. Refer to the general section 1239 OPERATION & MAINTENANCE for provision of the information.

Requirements - Linea™ Weatherboard

ABA20220988
APPROVED - Site Copy
Hastings District Council
20/09/2022

1.8 LINEA™ WEATHERBOARD INSTALLATION INFORMATION

Installer to comply with all the relevant information in;

- Linea™ Weatherboard Technical Specification; and,
- BRANZ Appraisal 447

Performance

1.9 PERFORMANCE, WIND

The design wind zones are to NZS 3604, up to and including Extra High Wind Zone. James Hardie® Technical Specifications are suitable for these conditions.

2 PRODUCTS

Materials

2.1 LINEA™ WEATHERBOARDS

Hardie™ Linea™ Weatherboards, bevel back, 16mm thick, pre-primed, manufactured from a reduced density cellulose fibre cement, tested to NZBC E2/VM1 for weathertightness and complying with the NZBC.

2.2 EXTERIOR CAVITY BATTENS

Radiata pine battens, minimum 45mm wide x 18mm thick, H3.1 treated, height to match timber framing studs. To NZS 3602, requirements for wood-based building components to achieve a 50-year durability performance.

Components - Linea™ Weatherboards

2.3 SOAKERS

External metal corner soaker. Refer to SELECTIONS.

2.4 INTERNAL "W" MOULD 90

Etched primed aluminium extrusion.

2.5 EXTERIOR CAVITY CLOSER/VERMIN-PROOFING

Perforated PVC, with upstands.

2.6 HARDIE™ CORNER UNDER FLASHING

50 x 50mm PVC moulding.

2.7 AXENT™ TRIM

16mm thick pre-primed fibre cement trim.

2.8 CANT STRIP

Cant strip, uPVC profiled strip.

2.9 FILL

ADOS CRC Builders fill, two part exterior grade fill to finish over jolt head nails.

2.10 FLEXIBLE SEALANT

Bostik Seal N Flex-1 or Sikaflex AT Facade or Sikaflex MS sealant for tongue and groove joint at ends of Linea™ Weatherboards.

2.11 FASTENER TYPE

Fasteners to minimum durability requirements of the NZBC. Refer to NZS 3604, for requirements for fixing's material to be used in relation to the exposure conditions.

Refer to NZBC E2/AS1, material selection, and compatibility of materials in contact, for selection of suitable fixing materials and their compatibility with other materials.

Zone	Fixings Material
Zone D, Zone E / Microclimates (incl. Geothermal)	Grade 316 Stainless
Zone B, Zone C	Hot-dipped galvanized

Check against SED (specific engineering design) requirements for microclimate conditions. For fastener type refer to following clause(s).

ABA20220988
APPROVED - Site Copy
Hastings District Council
20/09/2022

2.12 GALVANIZED STEEL FACE NAILING OVER BATTENS & RIGID AIR BARRIER

Hot-dipped galvanized, 90 x 4.00mm joit head nails for Linea™ Weatherboard face nailing (with pre-drilling) over cavity battens over rigid air barrier into timber stud.

2.13 NAILING FOR AXENT™ TRIM OVER CAVITY FIX LINEA™ WEATHERBOARD

90 x 4.00mm jolt head nails at 400mm centres staggered nailing (with pre-drilling).

Accessories

2.14 SEALANT

Silaflex AT-Facade sealant.

3 EXECUTION

Conditions

3.1 STORAGE

Take delivery of products dry and undamaged on pallets, and keep on pallet. Protect edges and corners from damage and cover to keep dry until fixed.

3.2 HANDLING

Avoid distortion and contact with potentially damaging surfaces. Carry weatherboards on edge. Do not drag weatherboards across each other, or across other materials. Protect edges, corners and surface finish from damage.

3.3 SUBSTRATE - TIMBER FRAMING

Do not commence work until the substrate is of the standard required by James Hardie® for the specified finish; plumb, level and in true alignment. Moisture content of timber framing must not exceed the requirements specified by NZS 3602 to minimise shrinkage and movement after sheets are fixed.

Application - generally

3.4 INSTALL CAVITY BATTENS

Install 18mm minimum thick cavity battens to NZBC E2/AS1, where required. Fix vertical cavity battens to wall framing studs. The battens are fixed by the cladding fixings which will penetrate the wall framing studs under the wall underlay. Seal the top of the cavity and install cavity closer/vermin-proofing at base of walls, open horizontal (or raking) junctions, over openings (windows, meters etc). Do not use horizontal cavity battens. Use cavity spacers where fixing is required between cavity battens.

3.5 PENETRATIONS AND FLASHINGS

Confirm that exterior wall openings have been prepared ready for the installation of all window and door frames and other penetrations through the cladding. Required preparatory work includes the following:

- Wall underlay appropriately incorporated with penetration and junction flashings.
- Materials lapped in a way that water tracks down to the exterior face of the wall underlay.
- Wall underlay to openings finished and dressed off ready for the installation of window and door frames and other penetrations.
- Required holes in cladding accurately formed and cut to James Hardie® requirements, ensure (if required) services penetration grommets/sleeves/seals/tapes are in place prior to cladding installation.
- Claddings neatly finished off to all sides of openings
- Installation of flashings (those required to be installed prior to installation of penetrating elements).

3.6 INSTALL LINEA™ WEATHERBOARDS

Cut weatherboards to required lengths and fit joints off-stud using tongue and groove ends. Fit internal corners and fix weatherboards as per Linea™ Weatherboard technical specifications. Fit and fix external corners and flexible sealant to tongue and groove joints as required.

3.7 INSTALL FLASHINGS

Install flashings at all wall openings, penetrations, junctions, connections, window sills, heads and jambs to NZBC E2/AS1.

ABA20220988
APPROVED - Site Copy
Hastings District Council
20/09/2022

Completion

3.8 REPLACE

Replace all damaged or marked elements.

3.9 LEAVE

Leave work to the standard required for following procedures.

3.10 REMOVE

Remove debris, unused materials and elements from the site.

4 SELECTIONS

For further details on selections go to www.jameshardie.co.nz.
Substitutions are not permitted to the following, unless stated otherwise.

4.1 CAVITY BATTENS

Timber species:	Radiata pine
Treatment:	H3.1

Linea™ Weatherboards

4.2 JAMES HARDIE® LINEA™ WEATHERBOARDS

Location:	Refer to drawing sheet 5
Brand/type:	James Hardie® Linea™ Weatherboard
Thickness:	16mm
Width:	150mm
Nailing:	Refer to items under 2.0 PRODUCTS

4.3 JAMES HARDIE® LINEA™ WEATHERBOARD SOAKERS

Size:	170mm long for 150mm WB
Material:	Stainless steel

4.4 PRIMER TO CUT ENDS

Type:	Dulux 1 Step, Resene Quick Dry

ABA20220988
APPROVED - Site Copy
Hastings District Council
20/09/2022

4239JH JAMES HARDIE® SOFFITS

1 GENERAL

This section relates to the supply and fixing of **James Hardie®** products to the underside of exterior soffits, verges and eaves. It includes:

- James Hardie® Hardie™ Flex Eaves Lining

Documents

1.1 DOCUMENTS

The following documents are specifically referred to in this section:

NZBC E2/AS1	External moisture
NZS 3602	Timber and wood-based products for use in building
NZS 3604	Timber-framed buildings

1.2 MANUFACTURER/SUPPLIER DOCUMENTS

James Hardie® documents relating to this part of the work:
Eaves and Soffits Installation Manual by James Hardie®
Fire and Acoustic Design Manual by James Hardie®

Manufacturer/supplier contact details

Company:	James Hardie New Zealand Limited
Web:	www.jameshardie.co.nz
Email:	info@jameshardie.co.nz
Telephone:	0800 808 868

Warranties

1.3 WARRANTY - MANUFACTURER/SUPPLIER

Provide a material manufacturer/supplier warranty:

15 years:	For James Hardie® Hardie™ Flex Eaves Lining

(refer to James Hardie® product warranty)

15 year:	For accessories supplied by James Hardie® (refer to James Hardie® product warranty)
From:	Date of purchase

- Provide this warranty on the manufacturer's standard form.

Requirements

1.4 QUALIFICATIONS

Workers / Installers / applicators to be experienced, competent trades people familiar with the materials and techniques specified.

1.5 NO SUBSTITUTIONS

Substitutions are not permitted to any of the specified systems, components and associated products listed in this section.

1.6 SAFE WORKING

To James Hardie® requirements for safe working practices with James Hardie® products, particularly with regards to cutting and drilling.

1.7 INFORMATION FOR OPERATION AND MAINTENANCE

Provide relevant James Hardie maintenance requirements at completion of the work.

Performance

1.8 PERFORMANCE - UP TO AND INCLUDING VERY HIGH WIND ZONE

The design wind speeds/zones are to NZS 3604, up to and including Very High Wind Zone. Eaves and Soffits Installation Manual by James Hardie® requirements are suitable for these conditions.

ABA20220988
APPROVED - Site Copy
Hastings District Council
20/09/2022

2 PRODUCTS

Materials

2.1 HARDIE™ FLEX EAVES LINING

James Hardie® Hardie™ Flex Eaves Lining 4.5mm and 6mm thick cellulose fibre reinforced cement sheet. Manufactured from Portland cement, ground sand, cellulose fibre and water.

Components

2.2 FASTENER TYPE

Fasteners to minimum durability requirements of the NZBC. Refer to NZBC E2/AS1, material selection for fixing material, and compatibility of materials in contact, for selection of suitable fixing materials and their compatibility with other materials.

Exposure	Fixing	Fixing Material	Zone
Sheltered	Nail	Hot-dip galvanized steel or Stainless steel	B, C
Sheltered	Nail	Stainless steel	B, C, D, E

Check against SED (specific engineering design) requirements for microclimate conditions. Refer to SELECTIONS for fastener type.

Components - Hardie™ Flex Eaves Lining

2.3 SOFFIT JOINTERS AND MOULDS

Extruded uPVC jointer, capping and scotia mould.

2.4 HARDIE™ FLEX NAIL

Hardie™ Flex Nail, 40 x 2.8mm stainless steel or galvanized nail, Refer to SELECTIONS.

Components - General

2.5 FLEXIBLE JOINT SEALANT

Refer to SELECTIONS.

3 EXECUTION

Conditions

3.1 STORAGE

Take delivery of products dry and undamaged. Store on site, lay flat on a smooth level surface clear of the ground. Protect materials, finished surfaces, edges and corners from damage, water and moisture.

3.2 HANDLING

Move/handle goods in accordance with James Hardie® requirements. Avoid distortion and contact with potentially damaging surfaces. Do not drag sheets across each other, or across other materials. Protect edges, corner and surface finish from damage. Reject and replace goods that are damaged or will not provide the required finish. Install materials in a dry state.

3.3 SUBSTRATE - TIMBER FRAMING

Do not commence work until the substrate is of the standard required for the specified finish; plumb, level and in true alignment. Moisture content of timber framing must not exceed the requirements specified by NZS 3602 to minimise shrinkage and movement after sheets are fixed.

3.4 COMMENCE WORK

Do not commence work until the roof has been installed.

Application - general

3.5 SHEET LAYOUT

All sheet edges must be fully supported by framing or rebates in fascia and barge boards.

ABA20220988
APPROVED - Site Copy
Hastings District Council
20/09/2022

3.6 CUTTING SOFFIT CLADDING

Cut sheets dry using score and snap method, hand guillotine method or fibreshear heavy duty method. If these methods are not feasible, use an alternative manufacturer approved method.

3.7 CIRCULAR HOLE FORMING

Mark the centre of the hole on the sheet, pre-drill a pilot hole. Use the pilot hole as a guide for a hole saw fitted to a heavy duty electric drill.

3.8 IRREGULAR HOLE FORMING

Drill a series of small holes around the perimeter of the proposed hole, tap out the waste piece from the sheet face.

3.9 INSTALL HARDIE™ FLEX EAVES LINING

Install in accordance with James Hardie® installation manual requirements. Refer to SELECTIONS for fixing and jointing methods.

3.10 FASTENER - SIZE AND LAYOUT

Fix sheets to framing using fasteners as nominated in SELECTIONS. Fix to James Hardie® installation manual requirements.

3.11 SEALANTS

Application and use of sealants to manufacturer's instructions. Check with sealant manufacturer prior to coating over sealants.

Completion

3.12 COMPLETE

Ensure the work is complete with all components, accessories, trim, sealant and finishing properly installed so the soffit cladding system is completely weathertight.

3.13 REPLACE

Replace all damaged or marked elements.

3.14 CLEAN

Clean surfaces.

3.15 LEAVE

Leave work to the standard required for following procedures.

3.16 REMOVE

Remove debris, unused materials and elements from the site.

4 SELECTIONS

For further details on selections go to www.jameshardie.co.nz
Substitutions are not permitted to the following, unless stated otherwise.

Materials

4.1 HARDIE™ FLEX EAVES LINING

Location:	Soffits
Brand/type:	James Hardie® Hardie™ Flex Eaves Lining
Thickness:	4.5mm
Width:	450mm, 600mm - 4.5mm thick sheet (2400mm length)
Fixing Method:	Hardie™ Flex nails
Fixing type:	Galvanized Hardie™ Flex Nail, 40 x 2.8mm
Joint detail:	Hardie™ Jointer 5mm for 4.5mm thick sheet.

ABA20220988
APPROVED - Site Copy
Hastings District Council
20/09/2022

4284RE RCS INSULATED FACADE SYSTEM

1 GENERAL

This section relates to the supply and fixing of **Resene Construction Systems** Insulated Facade cavity based exterior wall cladding system based on styrene fixed over a drained cavity to timber or steel framing and with an applied textured surface finish.

1.1 ABBREVIATIONS AND DEFINITIONS

The following abbreviations apply specifically to this section:

EPS	Expanded polystyrene
PPCS	Proprietary Plaster Cladding Standard
MPNZA	Master Painters NZ Association
LRV	Light Reflectance Value

1.2 DOCUMENTS

The following documents are specifically referred to in this section:

NZBC B2/AS1	Durability
NZBC E2/AS1	External moisture
NZS 3604	Timber-framed buildings
WorkSafe:	Guidelines for the provision of facilities and general safety in the construction industry
MPNZA	Heath and Safety Programme

Health and Safety at Work Act 2015

1.3 MANUFACTURER/SUPPLIER DOCUMENTS

Manufacturer's and supplier's documents related to this section are:

- Resene Construction Systems Technical Manual
- Resene Construction Systems Trade Spec™
- Resene Construction Systems Project Guide
- Resene Total Colour System
- BRANZ Appraisal 633 - Rockcote Resene Ltd T/A Resene Construction Systems

Materials and execution to Resene Construction Systems specification except where varied by this specification and supported by architectural detailing.

Manufacturer/supplier contact details

Company:	**Resene Construction Systems**
Web:	www.reseneconstruction.co.nz
Email:	help@reseneconstruction.co.nz
Telephone:	0800 50 70 40

Contact details for Resene literature is 0800 RESENE (0800 737 363) or web site www.resene.co.nz.

Warranties

1.4 WARRANTY - MANUFACTURER/SUPPLIER

Provide a material manufacturer/supplier warranty:
15 years: For materials by **Resene Construction Systems**

- Commence the warranty from the date of Practical Completion of the contract works.

1.5 WARRANTY - INSTALLER/APPLICATOR

Provide an installer/applicator warranty:
5 years: For execution/workmanship - by LBP Registered Plasterer

- Commence the warranty from the date of Practical Completion of the contract works.

Requirements

ABA20220988
APPROVED - Site Copy
Hastings District Council
20/09/2022

1.6 NO SUBSTITUTIONS

Substitutions are not permitted to any specified Resene Construction Systems Insulated Facade System.

1.7 INFORMATION FOR OPERATION AND MAINTENANCE

Provide **Resene Construction Systems Maintenance Guide** on or before Practical Completion of the contract for issuing to the building owner. **Resene Construction Systems Maintenance Guide** to be provided on request.

1.8 HEALTH AND SAFETY

Refer to the requirements of the Health and Safety at Work Act 2015 updates and WorkSafe: Guidelines for the provision of facilities and general safety in the construction industry.
If the elimination or isolation of potential hazards and risks is not possible then minimise hazards and risks in this work on site by using the proper equipment and techniques as required in the MPNZA Health and Safety Programme. Supply protective clothing and equipment. Inform employees and others on site of the hazards and risks, and put into place procedures for dealing with emergencies. Obtain from Resene Construction Systems the material safety data sheets for each product. Keep sheets on site and comply with the required safety procedures.

1.9 PRODUCER STATEMENT

Provide the producer statement compiled by the Registered Plasterer in the form as required by the Building Consent Authority.

Compliance information

1.10 DURABILITY

The work covered by this part of the specification has been designed and constructed to achieve a durability of 15 years.

1.11 INFORMATION REQUIRED FOR CODE COMPLIANCE

Provide the following compliance documentation:

- Applicators approval certificate from the manufacturer / importer / distributor
- Manufacturer's, importer's or distributor's warranty
- Installer's / applicator's warranty
- Producer Statement - Construction (PS3) from the applicator / installer
- Other information required by the BCA in the Building Consent Approval documents.

Performance - general

1.12 PERFORMANCE

Accept responsibility for the structural and weather-tight performance of the cladding installation.

1.13 PROTECTION OF NEW PLASTER

Confirm the protection systems to be applied to fresh plaster coats. Plastering not to begin until systems are confirmed.

1.14 FIXINGS, WIND

Design and use the fixings appropriate for the wind zone and topographical classification (T) of the site and building height; as required by NZS 3604.

2 PRODUCTS

Materials

2.1 MINERAL PLASTER SYSTEMS COARSE MESH RENDER

Polymer modified cement-based dry plaster mix.

2.2 RESENE LIMELOCK

Water-based 100% acrylic sealer.

2.3 MINERAL TEXTURE

Polymer-modified cement-based dry plaster mix.

ABA20220988
APPROVED - Site Copy
Hastings District Council
20/09/2022

2.4 RESENE X-200

Resene X-200 waterproof membrane, colour selection from Resene Total Colour System.

2.5 REINFORCING MESH

Resene Construction Systems Qual brand alkali-resistant fibreglass woven mesh and sticky mesh 150mm wide.

Components

2.6 GRAPHITE COMPOSITE SHEET FOR EIFS CLADDING - GRAPHEX INSULATION

Neopor®; graphite composite made from expanded graphite amalgamated granules, expanded to form solid grey blocks. 40mm, 50mm or 60mm thick graphite composite sheets, class H.

2.7 EXTERIOR CAVITY WALL BATTENS

40mm x 20mm polystyrene battens with fire retardant, width and height to match timber framing studs to NZS 3602.

2.8 FIXINGS, TIMBER

50mm/60mm system:	110mm x 4.00mm hot-dipped galvanized flat head nails with 40mm diameter plastic washers.

2.9 REINFORCING MESH

Resene Construction Systems alkali-resistant fibreglass woven mesh.

Accessories

2.10 EXTERIOR CAVITY BASE VENTED STARTER STRIP

Resene Construction Systems perforated uPVC ventilated starter strip bottom channel with upstands for base of walls, open horizontal (or raking) junctions, over openings (windows, meters, etc. Length and width to suit cavity.

2.11 FLASHING AND ACCESSORIES

Resene Construction Systems proprietary profiles made from rigid uPVC for head, sill, jamb, starter strips (vermin proofing), expansion and control joints, head jamb soakers, corner and base exterior applications.

2.12 FIXING BLOCKS

H3.2 timber blocks to match polystyrene thickness, for the fixing of outside fittings (e.g. downpipes, hose taps, lights, etc)

2.13 SEALANT

BRANZ appraised modified silicon (MS) sealant.

2.14 ADHESION PRIMER (UPVC)

Rockcote MultiStop bedding compound.

2.15 ADHESIVE

Liquid non-solvent polymer based construction adhesive to **Resene Construction Systems** requirements.

3 EXECUTION

Conditions

3.1 PLASTERING CONDITIONS

Carry out plastering to Resene Construction Systems specification under conditions which will not adversely affect the finished work.

3.2 PROTECT

Before application of plaster, apply masking film and tape to all joinery, pipes, roofs and all areas likely to be marked by the plaster. Use drop cloths and ground covers to keep the working areas clean. Clean off droppings onto finished work immediately.

ABA20220988
APPROVED - Site Copy
Hastings District Council
20/09/2022

3.3 PRE-INSTALLATION REQUIREMENTS

Check work previously carried out and confirm it is of the required standard for this part of the work. Do not begin the application until required openings and apertures have been cut, pipes, fixtures, fixing pads and plugs have been fixed and flashing and other preparation are complete. Do not commence plastering until substrate is of the required standard. All defects in substrate must be rectified prior to application of plaster coatings commencing.

3.4 FLASHING AND DETAILING

Comply with NZBC E2/AS1 and Resene Construction Systems penetration flashing guidelines. Carry out to the required standard of execution to ensure water does not penetrate.

3.5 ALIGNMENT OF FRAMING

To the standard required by the Resene Construction Systems, plumb, level and in true alignment.

3.6 STANDARDS AND TOLERANCES

Comply with the tolerances laid down. To have no deviation more than 3mm from a straight edge 1200mm long.

3.7 CONFIRM LAYOUT

Before commencing work confirm the layout with the owner the position of expansion joints and other visual detailing of the finished work.

Application

3.8 CAVITY BATTENS

Temporary fix EPS battens full length to studs to achieve a 20mm minimum width drained cavity to NZBC E2/AS1. The battens are fixed by the cladding fixings which will penetrate the wall framing studs over the wall underlay. Seal the top of the cavity. Install cavity closer/vermin-proofing at base of walls, open horizontal (or raking) junctions, over openings (windows, meters, etc.) Horizontal cavity battens must be no longer than 100mm. Use cavity spacers where fixing is required between cavity battens. Fix additional battens to internal and external corners and around openings to **Resene Construction Systems** standard details.

3.9 PENETRATIONS

Confirm that exterior wall openings have been prepared ready for the installation of all window and door frames and other penetrations through the cladding. Required preparatory work includes the following:

- wall underlay to openings finished and dressed off ready for the installation of window and door frames and other penetrations
- claddings neatly finished off to all sides of openings
- installation of flashings (those required to be installed prior to installation of penetrating elements).
- where electrical cables pass through cladding, ensure that there is no direct contact with the polystyrene, conduit required to be installed by electrician.
- Slope down to outside, pipes and conduits etc.

3.10 PENETRATION FLASHING

Fix in place required uPVC trims, profiles flashing and control joints. Service penetrations such as piping and light fittings to be sealed by specific trade.

3.11 INSULATION SUBSTRATE BOARD

Butt-joint the insulation board, continuously support all edges and nail/screw with heads flush, to **Resene Construction Systems** details. Install timber fixing blocks where required and apply a patch over to NZBC E2/AS1, or manufacturer's requirements.

3.12 MOVEMENT CONTROL JOINTS

Provide movement control joints in the plaster to coincide with movement joints in the background and/or junctions between dissimilar backgrounds in the same plane and/or where shown on the drawings and to **Resene Construction Systems** requirements. Ensure reinforcing mesh is not continuous across control joints. Exposed control joints to be reflected through final coatings from substrate. Confirm locations in writing to the owner before work commences.

ABA20220988
APPROVED - Site Copy
Hastings District Council
20/09/2022

3.13 FIT FLASHINGS AND ACCESSORIES

Check and ensure head flashing has been installed. Fit flashing to jambs and sill on recessed joinery using **Resene Construction Systems** proprietary flashing. Reinforce external corners and bottom edges of polystyrene sheets with uPVC angles and channel extrusions to **Resene Construction Systems** technical and installation manual.

3.14 MINERAL BASE AND MESH COAT

Apply base plaster coat 5mm thickness maximum based on **Plaster Systems Coarse Mesh Render**. Embed glassfibre mesh into the wet plaster. Overlap each successive length by 100mm minimum. Apply sticky mesh around all external corners and into all window reveals. Apply diagonal reinforcement strips at all corners of windows, doors and other exterior openings.

3.15 MINERAL RENDER LEVELING COAT

Apply by trowel or pump second coat of **Plaster Systems Coarse Quick Mesh Render** 1mm-2mm thickness. Trowel flat and leave to touch dry before floating off with a large plastic float and water, to remove any imperfections and leave a level surface.

3.16 MINERAL RENDER, LEVELLING COAT - COOLPLAST LRV <25%

Apply by trowel or pump second coat of **RCS CoolPlast** 1mm-2mm thickness. Trowel flat and leave to touch dry before floating off with a large plastic float and water, to remove any imperfections and leave a level surface.

3.17 FINISHING

Refer to SELECTIONS for system texture finish and colour.

3.18 MINERAL RENDER, MINERAL TEXTURED FINISH COAT

Apply selected mineral texture coat to the desired thickness to achieve the specified finish and colour (optional) to **Resene Construction Systems** requirements. Refer to SELECTIONS for mineral texture finish and colour.

3.19 SEAL COAT, OVER MINERAL TEXTURE FINISH

For mineral texture finish, seal the base coats with one coat of Resene Limelock immediately after or at least within 14 days of applying mineral texture coat. Apply evenly by commercial grade knapsack sprayer, spray, long pile roller or brush and allow to dry.

Completion

3.20 FINAL INSPECTION

A final inspection by Resene Constructions Systems applicator and project assessor of the entire finished cladding to take place immediately after completion of the wall cladding work and any defects or subsequent damage made good immediately.

4 SELECTIONS

For further details on selections go to www.reseneconstruction.co.nz.
Substitutions are not permitted to the following, unless stated otherwise.

Performance

4.1 WIND ZONE

Building wind zone: High (as determined from NZS 3604)

Materials

4.2 RESENE CONSTRUCTION SYSTEMS POLYSTYRENE CAVITY BATTENS

Type: 40mm x 20mm polystyrene

4.3 RESENE CONSTRUCTION SYSTEMS UPVC CAVITY BASE VENTED STARTER TRACK

Type: Resene Construction Systems uPVC ventilated starter track.

ABA20220988
APPROVED - Site Copy
Hastings District Council
20/09/2022

4.4
RESENE CONSTRUCTION SYSTEMS INSULATED FACADE SYSTEM - MINERAL RENDER & MINERAL TEXTURE - LRV > 25%

Location:	Refer to drawings
Manufacturer:	Resene Construction Systems
Substrate:	50mm Graphex graphite composite
Basecoat 1st layer:	Rockcote PM100 Quick Render; plus fibreglass mesh
Second coat:	Rockcote PM100 Quick Render
Sealer coat:	Resene Limelock
Texture coat:	Rockcote Mineral Texture
Texture finish:	Ezy Tex (hand trowelled, floated finish)
Paint coat:	LRV of texture coat (recommended) >25% Resene X-200

ABA20220988
APPROVED - Site Copy
Hastings District Council
20/09/2022

4323MT METROTILE METAL ROOFING TILES

1 GENERAL

This section relates to **Ross Roof Group Ltd** interlocking pressed metal roofing tiles complete with underlay, battens and accessories.
It includes ten Metrotile profiles composed of a Zincalume protected steel substrate covered with either;

- an acrylic satin finish

1.1 ABBREVIATIONS AND DEFINITIONS

The following abbreviations apply specifically to this section:

NZMRM	New Zealand Metal Roofing Manufacturers Inc.

Documents

1.2 DOCUMENTS

The following documents are specifically referred to in this section:

NZBC E2/AS1	External moisture
NZS 3604	Timber-framed buildings
NZMRM CoP	NZ Metal Roof and Wall Cladding Code of Practice

1.3 MANUFACTURER'S DOCUMENTS

Manufacturer's and supplier's documents relating to this part of the work:
Metrotile Company Brochure
Metrotile Roofing Tile Installation Manual; Bond/Classic/Roman/Shake
Technical Specification for Classic Tile

Manufacturer/supplier contact details

Company:	**Ross Roof Group Ltd**
Web:	www.metrotile.com
Email:	info@metrotile.com
Telephone:	09 2999498

Warranties

1.4 WARRANTY - MANUFACTURER/SUPPLIER

Provide a material manufacturer/supplier warranty:

50 years (25+25):	For Metrotile Zincalume® roofing tiles (paint or chip): manufacturer's 25 year weatherproof warranty plus a subsequent 25 years diminishing pro-rata weatherproof warranty
15 years:	For surface coating - satin acrylic-coated tile

- Provide this warranty on the Metrotile Roofing Systems standard form
- Commence the warranty from the date of Practical Completion of the contract works.

1.5 WARRANTY - INSTALLER/APPLICATOR

Provide an installer/applicator warranty:

5 years:	For installation of Metrotile roof

- Provide this warranty on the installer/applicator standard form
- Commence the warranty from the date of installation

Requirements

1.6 NO SUBSTITUTIONS

Substitutions are not permitted to any specified **Ross Roof Group Ltd** system, or associated components and products.

ABA20220988
APPROVED - Site Copy
Hastings District Council
20/09/2022

1.7 QUALIFICATIONS

Installers to be **Ross Roof Group Ltd** trained fixers employed or contracted to a registered Metrotile Roofing Systems installer.

1.8 MAINTENANCE INFORMATION

Provide one copy of all relevant **Ross Roof Group Ltd** maintenance information on completion of the roofing work.

Performance - Wind

1.9 DESIGN PARAMETERS - NON SPECIFIC DESIGN

Building wind zone: High / 1.20 kPa ULS (refer to NZS 3604, table 5.4)

1.10 FIXINGS, WIND - NON SPECIFIC DESIGN

Design and use the fixings appropriate to **Ross Roof Group Ltd** requirements and as appropriate for the project wind design stated above. To NZS 3604. Refer to **Ross Roof Group Ltd '**Profile Specifications Summary' for the selected profile, finish and uplift requirements.

Performance - General

1.11 CO-ORDINATE

Co-ordinate to ensure substrate and preparatory work is complete and other work programmed in the order required for access and completion of the roof.

1.12 PERFORMANCE

Accept responsibility for the weather-tight performance of the completed roofing system, including all penetrations through the roof and junctions with walls and parapets. Comply with NZMRM CoP, for performance, loadings, design, flashings, penetrations and installation recommendations.

2 PRODUCTS

Materials

2.1 PRESSED METAL TILES - SATIN FINISH

Ross Roof Group Ltd pressed metal tiles to NZBC E2/AS1. Fabricated from Zincalume® - protected steel with acrylic top coat. Refer to SELECTIONS for type.

Components

2.2 BATTENS

To NZS 3604, Radiata pine treated H1.2. Moisture content to NZS 3602. Size, spacing and fixing to NZS 3604, for All Wind Zones' and to **Ross Roof Group Ltd** installation instructions.

2.3 FIXINGS GENERALLY

Fixings and fasteners are to be compatible with all materials, the environment and meeting the requirements of the NZ Building Code. Installation is to be in accordance with NZBC E2/AS1 and/or NZS 3604 and **Ross Roof Group Ltd '**Profile Technical Summary'.
For fixing patterns refer to **Ross Roof Group Ltd '**Profile Technical Summary' for the selected profile.

2.4 NAILS

Nails for batten fastening to **Ross Roof Group Ltd** installation instructions, sized and installed to NZS 3604.

Accessories

2.5 FLASHINGS, CAPPINGS AND COVERS

To NZBC E2/AS1. Use ridge and hip caps, barge covers, general purpose malleable-edged flashings and side flashings supplied by **Ross Roof Group Ltd** as part of the selected tile roofing system.

2.6 SEALANT

Neutral curing silicone or polymer sealant as required by **Ross Roof Group Ltd** and used as directed.

ABA20220988
APPROVED - Site Copy
Hastings District Council
20/09/2022

3 EXECUTION

Conditions

3.1 INSPECTION

Inspect the roof framing and supporting structure and do not start work until it is complete and fully braced ready for tiling, all to the requirements of NZS 3604.

3.2 STORAGE

Stack tiles on a level, hard base, ventilated and protected from damage and weather. Do not allow moisture to build up between sheets in a stack.

3.3 HANDLING

Unload and handle tiles without soiling, scratching, crushing or other damage. Protect edges from damage.

3.4 COMPLY

Comply with the preparation, laying and fixing requirements of NZBC E2/AS1 or **Ross Roof Group Ltd** requirements where these are of a higher standard.

Application

3.5 SET-OUT

Carefully set out the roof with a measuring rod to position the battens accurately taking account of rafter lengths, overhangs into gutters and spouting and verge overhangs, all to minimise tile cutting.

3.6 FIX BATTENS

To NZS 3604. Fix battens over the underlays in straight courses, spanning at least three rafters, between fascia and ridge and elsewhere to **Ross Roof Group Ltd** details. Nail at every crossing to the requirements of NZS 3604. Square cut ends to form butt joint over rafters with joints staggered.

3.7 LAY VALLEYS

Lay valleys over valley boards in accordance with **Ross Roof Group Ltd** recommendations.

3.8 LAYING

Do not take heavy equipment onto the roof. Plan work to minimise foot traffic. Work on the roof only using appropriate footwear. Inter-lock, lap and lay to **Ross Roof Group Ltd** requirements and finish to ridge, hip, valley, barge and eaves to NZBC E2/AS1 and **Ross Roof Group Ltd** required details, if not detailed elsewhere.

3.9 NAILING

Nail tiles to battens / or solid substrate generally through the upstand and downturn of the tile lap as well as all elements to NZBC E2/AS1 and **Ross Roof Group Ltd** details and to nail size, type and spacing. Fit neoprene washers under vertical nails for smooth-coated tiles.

3.10 CUTTING AND BENDING

Cut, bend and straighten tiles neatly to finish true to line and plane when in place, using installation equipment maintained in the proper condition, as required by **Ross Roof Group Ltd**. A full 40mm high stop end should be made at any tile termination point.

3.11 FIT FLASHINGS, COVERS AND CAPPINGS

Cut, fit and fix all elements true to line and plane, to NZBC E2/AS1, to **Ross Roof Group Ltd** flashing specifications, and the NZMRM CoP, if not detailed elsewhere.

3.12 PENETRATIONS

Form to NZBC E2/AS1, with upstands ready for flashing / overflashing. Flash and overflash all penetrations through the roof.

ABA20220988
APPROVED - Site Copy
Hastings District Council
20/09/2022

3.13 PENETRATIONS AND JUNCTIONS

Check that adjoining walls and parapets are prepared ready for the installation of the roofing. Confirm that openings have been prepared ready for the installation of penetrations through the roof. Required work includes the following:

- underlay turned up at wall
- underlay finished and dressed off to all openings, ready for the penetrations
- roofing installation neatly finished to all sides of openings.
- installation of flashings (those required to be installed prior to installation of penetrating elements and/or wall linings)

Completion

3.14 MAKE GOOD

Seal vertical nails and touch-up all chipped coatings to **Ross Roof Group Ltd** instructions.

3.15 LEAVE

Leave this work complete with all necessary flashing, undercloaks, valleys, ridges and hips all properly installed as the work proceeds so the finished roof is completely weathertight.

3.16 REMOVE

Remove trade rubbish and unused materials from the roof and surrounds regularly during the work. Sweep down the completed roof and clean out spouting, gutters and rainwater pipes. Remove debris, unused materials and elements from the site.

4 SELECTIONS

For further details on selections go to www.metrotile.com
Substitutions are not permitted to the following, unless stated otherwise.

4.1 METROTILE PRESSED METAL TILE - CLASSIC

Manufacturer:	**Ross Roof Group Ltd**
Profile:	Metrotile - Classic
Dimensions:	Overall length 1325mm, overall cover 1265mm, width of cover 368mm
Roof Pitch:	22º
Finish:	Satin

Accessories

4.2 METROTILE FLASHING, CAPPINGS AND COVERS

Trim type:	Refer to owner
Finish:	To match tiles

ABA20220988
APPROVED - Site Copy
Hastings District Council
20/09/2022

4521 ALUMINIUM WINDOWS AND DOORS

1 GENERAL

This section relates to the manufacture, supply, and installation of:

- aluminium windows
- aluminium doors and frames
- hardware and furniture
- flashings

1.1 ABBREVIATIONS AND TERMS

SLS	Serviceability limit state
ULS	Ultimate limit state
WGANZ	Window & Glass Association NZ
PQAS	Powder Coating Quality Assurance System

Documents

1.2 DOCUMENTS

The following documents are specifically referred to in this section:

NZBC E2/AS1	External moisture
NZBC F4/AS1	Safety from falling
NZBC H1/AS1	Energy efficiency
NZS 3604	Timber-framed buildings
NZS 4211	Specification for performance of windows
NZS 4223.3	Glazing in buildings - Human impact safety requirements
BRANZ BU 636	Protecting Glass From Damage

Window & Glass Association NZ (WGANZ) documents:

Window Installation Guide	Guide to Window Installation as described in E2/AS1 Amendment 7
PQAS	Powder Coating Quality Assurance System

Warranties

1.3 WARRANTY - MANUFACTURER / SUPPLIER

Provide a material manufacturer/supplier warranty:
5 years: For fabrication

1.4 WARRANTY - INSTALLER / APPLICATOR

Provide an installer/applicator warranty:
2 years: For installation

- Provide this warranty in the installer/applicator standard form.

Requirements

1.5 QUALIFICATIONS

Work to be carried out by trades people experienced, competent and familiar with the materials and techniques specified.

1.6 COMPLIANCE

Windows and doors to be manufactured and installed to NZBC E2/AS1.

1.7 CERTIFICATION

Provide evidence of a certificate by a laboratory accredited by International Accreditation of New Zealand that the windows and doors offered comply with the requirements.

Performance

ABA20220988
APPROVED - Site Copy
Hastings District Council
20/09/2022

1.8 PERFORMANCE - WINDOWS AND DOORS

To NZS 4211, including:

- deflection, opening sashes, air infiltration, water penetration, ultimate strength, torsional strength of sashes, marking.

Refer to SELECTIONS.

1.9 PERFORMANCE - STRUCTURAL/WEATHER-TIGHTNESS

The structural and weather-tight performance of the completed joinery, the glazing and infill panels is the responsibility of the window manufacturer.

Performance - Wind (design by contractor)

1.10 WIND - NON SPECIFIC DESIGN

Design the installation to the wind zone parameters of NZS 3604.
Refer to SELECTIONS for wind zone.

Finishes

1.11 CERTIFY COATINGS - POWDER COATING

Certify on request, compliance with this specification and support with control and sampling records. The coating should be applied by an applicator who can certify that the coating has been applied in accordance with the specification.

2 PRODUCTS

Materials

2.1 WINDOWS

Refer to SELECTIONS for type and finish.

2.2 DOORS

Refer to SELECTIONS for type and finish.

2.3 ALUMINIUM EXTRUSIONS

Alloy designation to comply. Branded and extruded for anodising or powder coating.

2.4 ALUMINIUM SHEET AND STRIP

Complying of suitable thickness. Rolled for anodising or powder coating.
Alloy designation: 5251 - H16 or 5005 - H16

2.5 GLASS

Refer to the glazing section for glass types and installation.

2.6 REVEALS - TIMBER PAINTED

Timber reveals for paint finish with all sides primed grooved for wall linings or flush finished for architraves.

2.7 FLASHINGS GENERALLY

To NZBC E2/AS1. Material, grade and colour of head flashings to match the window frames. Ensure that materials used for head, jamb and sill flashings are compatible with the window frame materials and fixings and cladding materials.

Components - for cavity systems

2.8 STANDARD CAVITY CLOSER

A perforated device constructed from either aluminium or PVC to close the cavity above the window or door unit, between the cladding and head flashing, to provide ventilation in accordance with NZBC E2/AS1 to the spaces above the window or door.

2.9 SUPPORT BAR

WGANZ extruded aluminium support bar with built in drainage and ventilation to NZBC E2/AS1, to provide continuous support to the window unit. Size to suit cladding type.

ABA20220988
APPROVED - Site Copy
Hastings District Council
20/09/2022

Components

2.10 GLAZING GASKETS

Thermoplastic rubber. Do not stretch glazing gaskets during installation. Measure and cut gaskets 5-10% over length before installation.

2.11 HARDWARE AND FURNITURE

Hinges, stays, catches, fasteners, latches, locks and furniture as offered by the window and door manufacturer. Key alike all lockable window hardware able to be keyed alike.

Sealants

2.12 WEATHERING / INSTALLATION SEALANT

Building sealant used in accordance with manufacturer's instructions for weather sealing aluminium frames to the cladding, complying.

2.13 FOAM TAPE

Foam tape to NZBC E2/AS1.

Finishes

2.14 POWDER COATED ALUMINIUM - HIGH-DURABILITY POLYESTER

High-performance polyester powder coating in accordance with WGANZ PQAS.

3 EXECUTION

Conditions - generally

3.1 DO NOT DELIVER

Do not deliver to site any elements which cannot be unloaded immediately into suitable conditions of storage.

3.2 UNLOAD WINDOW JOINERY

Unload, handle and store elements in accordance with the window manufacturer's requirements.

3.3 AVOID DISTORTION

Avoid distortion of elements during transit, storage and handling.

3.4 PREVENT DAMAGE

Prevent prefinished surfaces rubbing together, and contact with mud, plaster and cement. Keep paper and cardboard wrappings dry.

3.5 PROPRIETARY ELEMENTS

Fix in accordance with the window manufacturer's requirements.

3.6 PROTECTIVE COVERINGS

Retain protective coverings and coatings to BRANZ BU 636 and keep in place during the fixing process. Provide protective coverings and coatings where required to prevent marking of surfaces visible in the completed work and to protect aluminium joinery from following trades. Remove protection on completion.

3.7 ADDITIONAL PROTECTION

Supply and fix additional protection as necessary to prevent marking of surfaces which will be visible on completed work.

Conditions - fixings and fastenings

3.8 SUPPLY OF FIXINGS

Use only fixings and fastenings recommended by the manufacturer of the component being fixed and to comply with the ULS wind pressure stated in SELECTIONS. Ensure fixings and fastenings exposed to the weather are of aluminium, or Type 316 stainless steel or if not exposed to the weather may they be hot-dip galvanized steel with a coating weight of 610 g/m².

ABA20220988
APPROVED - Site Copy
Hastings District Council
20/09/2022

3.9 INSTALLATION FIXING

To NZBC E2/AS1. Fix windows/doors through reveal to frame with a pair of 75 x 3.15mm minimum galvanised jolt head nails or a pair of 8 gauge x 65mm minimum stainless steel screws. Fix at a maximum of 450 centres along all reveals and a maximum of 150mm from reveal ends. Ensure fixings do not penetrate metal flashings.
Install packers between reveals and framing at fixing points, except at the head.

Assembly

3.10 FABRICATION

Fabricate frames as detailed on shop drawings. Install glazing, hinges, stays and running gear as scheduled. Provide temporary bracing and protection. Temporarily secure all opening elements for transportation.

3.11 TIMBER REVEALS

Before fixing to aluminium frames, ensure that timber reveals which are being painted have been primed on all surfaces.

3.12 HARDWARE GENERALLY

Factory fit all required and scheduled hardware. Account for all keys and deliver separately to the site manager.

Installation - windows and doors

3.13 CORROSION PROTECTION

Before fixing, apply suitable barriers of bituminous coatings, stops or underlays between dissimilar metals in contact, or between aluminium in contact with concrete.

3.14 CONFIRM PREPARATION OF EXTERIOR WALL OPENINGS

Confirm that exterior wall openings have been prepared ready for the installation of all window and door frames. Do not proceed with the window and door installation until required preparatory work has been completed.

Required preparatory work includes the following:

- wall underlay/building wrap to openings finished and dressed off ready for the installation of window and door frames to NZBC E2/AS1.
- installation of flashings (those which are required to be installed prior to frames).

3.15 INSTALLATION

Fix to comply with the reviewed shop drawings and installation details including flashings and bedding compounds, pointing sealants and weathering sealants.

3.16 INSTALLATION CAVITY CONSTRUCTION

Install to WGANZ Window Installation Guide details and drawings including WGANZ sill support bars.

3.17 INSTALL FLASHINGS

Install flashings to heads, jambs and sills of frames as supplied and required by the window manufacturer and as detailed on the drawings. Finish head flashings to match window finish.

Place all flashings so that the head flashing weathers the jamb flashings, which in turn weathers over the upstand of the sill flashing. Ensure that sill flashings drain to the outside air.

3.18 COMPLETE AIR SEAL

To NZBC E2/AS1. Form an air-tight seal by means of a proprietary expanding foam or sealants used with backing rods, applied between the window / door reveal and structural framing to a depth of 10 - 20mm, to provide a continuous air tight seal to the perimeter of the window or door.

3.19 FIX HARDWARE

Fix all sash and door hardware and furniture as scheduled.

Application - jointing and sealing

ABA20220988
APPROVED - Site Copy
Hastings District Council
20/09/2022

3.20 SEAL FRAMES ON SITE

Seal frames to each other and to adjoining structure and finishes, all as required by the window manufacturer and to make the installation weathertight. In very high and extra high or greater wind zones, seal between the window head and the head flashing. Do not seal the junction between the sill member and the cladding or sill flashing which must remain open.

3.21 PREPARE JOINTS

Ensure joints are dry. Remove loose material, dust and grease. Prepare joints in accordance with the sealant manufacturer's requirements, using required solvents and primers where necessary. Mask adjoining surfaces which would be difficult to clean if smeared with sealant.

3.22 BACK UP

When using back-up materials do not reduce depth of joint for sealant to less than the minimum required by the manufacturer of the sealant. Insert polyethylene rod or tape back-up behind joints being pointed with sealant.

3.23 SEALANT FINISH

Tool sealant to form a smooth fillet with a profile and dimensions required by the sealant manufacturer. Remove excess sealant from adjoining surfaces, using the cleaning materials nominated by the sealant manufacturer and leave clean.

Completion - cleaning

3.24 REMOVE TRADE DEBRIS

Remove trade debris by appropriate means on a floor by floor basis as each floor is completed and again before any work is covered up by others. Arrange for general removal.

3.25 TRADE CLEAN

Trade clean window frames, operable windows and doors, glass and other related surfaces inside and out at the time of installation to remove marks, dust and dirt, to enable a visual inspection of all surfaces.

Completion

3.26 PROTECTIVE COVERINGS

Retain protective coverings and coatings and keep in place during the fixing process. Provide protective coverings and coatings where required to prevent marking of surfaces visible in the completed work and to protect aluminium joinery from following trades.

3.27 SAFETY

Indicate the presence of transparent glasses for the remainder of the contract period, with whiting, tape or signs compatible with the glass type. Indicators other than whiting must not be applied to the glass surface. Masking tape must not be used for this purpose.

3.28 IN SITU TOUCH-UP TO POWDER COATED ALUMINIUM

In situ touch-up of polyester or fluoropolymer coated aluminium is only permitted only to minor surface scratching. Otherwise replace all damaged material.

3.29 REMOVE

At the appropriate stage of the project, remove safety indicators and protective coverings and wipe down all joinery thoroughly.

3.30 REPLACE

Replace damaged, cracked or marked elements.

4 SELECTIONS

Performance

4.1 THERMAL PERFORMANCE

R-value: 0.26 (as determined from NZBC H1/VM1 or H1/AS1)

Performance - Wind (design by contractor)

ABA20220988
APPROVED - Site Copy
Hastings District Council
20/09/2022

4.2 WIND - NON SPECIFIC DESIGN

Building wind zone	High (refer to NZS 3604)

Window and door system

4.3 ALUMINIUM WINDOWS AND DOORS

Manufacturer:	Refer to owner

4.4 TIMBER REVEALS

Timber species:	PRFJ
Grade / Treatment:	LOSP / H3.1
Thickness:	19mm
Reveals:	Flush finish
Finish:	Pre-primed

Finishes

4.5 POWDER COATED ALUMINIUM - EXTRA-DURABLE POLYESTER

Type:	Polyester organic powder coating Extra-Durable powder coating
System integrity:	Minimum 10years film integrity; 10 years color integrity
Thickness:	Average of 90 microns with a minimum of 50 microns

4.6 FLASHINGS

Material/type:	To match
Pattern:	Formed to suit details provided

© CIL Masterspec Jul 2022

ABA20220988
APPROVED - Site Copy
Hastings District Council
20/09/2022

4555 GARAGE DOORS

1 GENERAL

This section relates to the manufacture, supply and installation of garage door systems including required opening/operating systems.

Documents

1.1 DOCUMENTS REFERRED TO

Documents referred to in this section are:
NZS 3604 Timber-framed buildings

Documents listed above and cited in the clauses that follow are part of this specification. However, this specification takes precedence in the event of it being at variance with the cited document.

Requirements

1.2 INFORMATION FOR OPERATION AND MAINTENANCE

Provide operating instructions for the garage doors and associated opening equipment. Provide a list of all components requiring regular maintenance.

Performance

1.3 DESIGN PARAMETERS WIND

Design the installation to the manufacturers requirements and as appropriate for the project wind design stated in the general section 1220 PROJECT.

1.4 LOADS - NON - SPECIFIC DESIGN - DOORS UP TO 3.0M HIGH

Garage doors complete with hinges, roller assemblies and fasteners to comply with wind performance requirements to NZS 3604.

1.5 RESPONSIBILITY FOR PERFORMANCE

Accept responsibility for the structural and weathertight performance of the completed garage door installation.

2 PRODUCTS

2.1 GARAGE DOOR

Manufacture complete with a compliance label.

2.2 MOTORISED DOOR OPENER

Garage door manufacturer selection.

3 EXECUTION

3.1 PREPARATION FOR INSTALLATION

Check that the trimmed and lined openings are formed and constructed to suit the required door units. Do not proceed until openings are properly formed.

3.2 MANUFACTURER'S REQUIREMENT FOR INSTALLATION

Install door, track and operating equipment complete with all specified and necessary accessories and hardware to the manufacturer's requirements.

3.3 START UP

Carry out start up procedures and verify proper performance of the doors.

3.4 ADJUSTMENT

Lubricate bearings and sliding parts and adjust doors to operate easily, free of warp, twist or distortion with a weathertight fit round the entire perimeter.

© CIL Masterspec Jul 2022

ABA20220988
APPROVED - Site Copy
Hastings District Council
20/09/2022

3.5 DEMONSTRATION

Carry out start up procedures and verify proper performance of the door. Demonstrate the operation of the door to the principal/principal's representative. Set security features to principal's requirements. Reset security features at practical completion of the contract works.

Completion

3.6 ENSURE

Ensure all elements are free of marks or blemishes, with all moving parts working fully and freely.

3.7 REPLACE

Replace damaged, cracked or marked elements.

3.8 LEAVE

Leave work to the standard required by following procedures.

3.9 REMOVE

Remove all debris, unused materials and elements from the site.

4 SELECTIONS

4.1 GARAGE DOOR - SECTIONAL OVERHEAD DOOR

Location:	Garage
Type:	Sectional (daylight opening - 4800W x 2120H)
Face panels:	Flat woodgrain plastic-coated steel

4.2 GARAGE DOOR CONTROLLERS

Number of remotes:	2 per door
Location of internal control buttons:	Garage
Number of internal control buttons:	1 per door

© CIL Masterspec Jul 2022

ABA20220988
APPROVED - Site Copy
Hastings District Council
20/09/2022

4610 GLAZING RESIDENTIAL

1 GENERAL

This section relates to the supply and fixing of glass products for external and internal joinery in residential type buildings and includes:

- windows and doors
- frameless shower and bath screens
- splashbacks, wall linings
- mirrors and mirror frames

1.1 ABBREVIATIONS AND DEFINITIONS

The following abbreviations apply specifically to this section:

PVB	Polyvinyl Butyral
CIP	Cast in place

Documents

1.2 DOCUMENTS

The following documents are specifically referred to in this section:

NZBC H1/AS1	Energy Efficiency
NZS 3604	Timber-framed buildings
NZS 4218	Thermal insulation - Housing and Small Buildings
NZS 4223.1	Glazing in buildings - Glass selection and glazing
NZS 4223.Supp1	Glazing in buildings - Supplement 1
NZS 4223.2	Glazing in buildings - Insulating glass units
NZS 4223.3	Glazing in buildings - Human impact safety requirements
NZS 4223.4	Glazing in buildings - Wind, dead, snow and live action
BRANZ BU 636	Protecting Glass From Damage

Warranties

1.3 WARRANTY - MANUFACTURER/SUPPLIER

Warrant glass under normal environmental and use conditions against failure of materials.

10 years:	for laminated glass
10 years:	for toughened glass

Performance

1.4 ENERGY EFFICIENCY

Provide glazing to meet the energy requirements of NZS 4218 and NZBC H1/AS1 for housing small buildings.
Refer to SELECTIONS and schedules for location and type of glazing.

2 PRODUCTS

Materials

2.1 CLEAR FLOAT GLASS

Clear ordinary annealed transparent float glass for general window glazing. Thickness to NZS 4223.1.

2.2 TEXTURED, PATTERNED OR OBSCURE GLASS

Translucent, annealed, rolled glass with a decorative pattern on one surface.

2.3 LAMINATED GLASS

Grade A Safety Glass with PVB or CIP resin interlayer.

2.4 TOUGHENED GLASS

Grade A Safety Glass.

ABA20220988
APPROVED - Site Copy
Hastings District Council
20/09/2022

2.5 TINTED FLOAT GLASS

Body tinted float glass.

2.6 INSULATING GLASS UNITS (IGU'S)

To NZS 4223.2 and the IGU Manufacturers Association (IGUMA) requirements.
Marking to NZS 4223.2 as modified by NZBC B2/AS1.

Materials, mirrors

2.7 SAFETY MIRROR GLASS

4mm, 5mm and 6mm annealed float glass mirror vinyl back safety glazing material.

Materials, screens

2.8 GLASS SCREENS SHOWER

Proprietary shower screens, formed to shape before toughening, complete with matching hardware.

Components, aluminium and uPVC glazing

2.9 GLAZING TAPE AND GASKETS

Single/double sided pressure sensitive self-adhesive low/medium/high density foam tapes/butyl tapes selected to suit the glazing detail to window manufacturers' requirements.

2.10 SETTING BLOCKS

Santoprene/Neoprene, 80-90 Shore A hardness, set at quarter points or to detail, to support the weight of glass panes.

Components, wall mounted glass (mirrors and splashbacks)

2.11 GLASS ADHESIVE

Adhesive mirror-mastic and double-sided adhesive tape.

3 EXECUTION

Conditions

3.1 GENERAL REQUIREMENTS

To NZS 4223.1, NZS 4223.3, NZS 4223.4. All external glazing to be wind and watertight on completion.

3.2 DELIVERY

Keep glass dry and clean during delivery and bring on to site when ready to glaze directly into place. Comply also with the storage requirements set out in BRANZ BU 636.

3.3 GLASS CONDITION

All glass to have undamaged edges and surfaces.

3.4 GLASS THICKNESS

If not specifically stated in the glazing schedule determine the minimum thickness of glass for each sheet as required by NZS 4223.1, NZS 4223.3, NZS 4223.4 and NZS 4223. Supp 1.
Determine the final glass thickness based on whether wind loading or human impact considerations govern.

3.5 REBATE DIMENSIONS

Provide rebates for glazing to the widths and depths necessary for each situation including minimum glass edge cover to NZS 4223.1.

3.6 JOINTING, PUTTY AND SEALING MATERIAL COMPATIBILITY

Ensure jointing, putty and sealing materials are compatible with glass substrates. Confirm compatibility with laminated glass, IGUs and coatings.

Conditions - human impact safety requirements

ABA20220988
APPROVED - Site Copy
Hastings District Council
20/09/2022

3.7 SAFETY GLAZING, GENERAL REQUIREMENTS

Glazing of doors, side panels, low level and window seat glazing, bathrooms, stairwell landings and similar locations, to NZS 4223.3 for thickness and maximum areas of safety glass.

3.8 SAFETY GLAZING MATERIAL

Use only safety glazing materials defined in NZS 4223.3. Ensure material is permanently marked and if cut by the distributor or installer mark each piece.

3.9 CONTAINMENT

Edge cover to comply.

Assembly

3.10 WORKING OF GLASS

All working of glass as required.

3.11 INSTALL SAFETY GLASS

To NZS 4223.3.

3.12 INSTALLING INSULATING GLASS UNITS

Refer to the glazing manufacturer's requirements and before glazing ensure that the materials forming the opening are strong enough to accept the weight, the rebates are the correct size and prepared to receive the units Fit setting and location blocks and bead glaze units using a compatible sealant and to the glazing manufacturer's requirements.

Application aluminium

3.13 INSTALL GLASS TO ALUMINIUM FRAMES

Install glass to NZS4223.1.

Application - wall mounted glass (mirrors and splashbacks)

3.14 WALL MOUNTED GLASS, ADHESIVE FIXED

For mirrors and splashbacks, fix with adhesive mirror-mastic and double-sided adhesive tape. Adhesive area 0.2 m2 per 1 m2 of glass to NZS 4223.3.

Application miscellaneous

3.15 INSTALL GLASS SHOWER SCREENS

Install shower and bath screens and doors to manufacturer's requirements.

Finishing

3.16 SAFETY

Indicate the presence of transparent glass for the remainder of the construction period, with whiting, tape or signs compatible with the glass type.

Completion

3.17 TRADE CLEAN

Clean off or remove safety indicators at completion of the building.

3.18 REPLACE

Replace damaged, cracked or marked glass.

3.19 LEAVE

Leave work to the standard required by following procedures.

3.20 REMOVE

Remove debris, unused materials and elements from the site.

4 SELECTIONS

ABA20220988
APPROVED - Site Copy
Hastings District Council
20/09/2022

Performance - wind

4.1 WIND ZONE - NON-SPECIFIC DESIGN

Building wind zone: High (as determined from NZS 3604)

ABA20220988
APPROVED - Site Copy
Hastings District Council
20/09/2022

4710P PINK® BATTS® & PINK® BATTS® SILENCER® INSULATION

1 GENERAL

This section relates to Tasman Insulation **Pink® Batts®** insulation materials installed into residential buildings.
It includes:
Thermal:

- **Pink® Batts® Ceiling Insulation** (**Pink® Batts® Classic** and **Pink® Batts® Ultra®**)
- **Pink® Batts® Skillion Roof Insulation**
- **Pink® Batts® Wall Insulation** (**Pink® Batts® Classic** and **Pink® Batts® Ultra®**)

Documents

1.1 DOCUMENTS

The following documents are specifically referred to in this section:

NZBCH1/AS1	Energy efficiency
NZS 4218	Thermal insulation - Housing and small buildings

1.2 MANUFACTURER/SUPPLIER DOCUMENTS

Manufacturer's and supplier's documents related to this section are:
Tasman Insulation New Zealand: Product Data Sheets and Installation Instructions
BRANZ Appraisal 238 - Pink® Batts® Insulation

Manufacturer/supplier contact details

Company:	**Tasman Insulation New Zealand**
Web:	www.pinkbatts.co.nz
Telephone:	0800 746 522

Warranties

1.3 WARRANTY - MANUFACTURER/SUPPLIER

Provide a material manufacturer/supplier warranty:

Lifetime Warranty	For **Pink® Batts®** insulation products

- Commence the warranty from the date of practical completion of the contract works.
- Provide this Warranty on the **Pink® Batts® Lifetime Warranty Certificate** form.

Requirements

1.4 QUALIFICATIONS, PINK® BATTS®

Installers to be **PinkFit® - Preferred Pink® Batts® installers**. A list of approved installers can be obtained from the web, by telephone or from the local building supplies merchant.

Web:	www.pinkbatts.co.nz
Telephone:	Freephone 0800 746 534

1.5 NO SUBSTITUTIONS

Substitutions are not permitted to any specified Tasman Insulation **Pink® Batts®** insulation or associated products, components or accessories.

2 PRODUCTS

Materials - thermal

2.1 PINK® BATTS® CEILING INSULATION

Pink® Batts® Ceiling Insulation (**Pink® Batts® Classic** and **Pink® Batts® Ultra®**) is a light weight flexible bio-soluble glass wool manufactured from up to 80% recycled glass, bonded with a thermosetting resin to form rectangular slabs. Refer to SELECTIONS for R values and thickness options.
NOTE: When insulation abutting or covering recessed downlights is intended to be in contact with IC, CA 80, CA 135 luminaries the insulation must withstand a 30s Needle Flame test. Pink® Batts® insulation meets this requirement.

ABA20220988
APPROVED - Site Copy
Hastings District Council
20/09/2022

2.2 PINK® BATTS® WALL INSULATION

Pink® Batts® Wall Insulation (**Pink® Batts® Classic** and **Pink® Batts® Ultra®**)is a light weight flexible bio-soluble glass wool manufactured from up to 80% recycled glass, bonded with a thermosetting resin to form rectangular slabs. Refer to SELECTIONS for R values and thickness options.

2.3 PINK® BATTS® SKILLION ROOF INSULATION

Pink® Batts® Skillion Roof Insulation is bio-soluble glass wool manufactured from up to 80% recycled glass, bonded with a thermosetting resin to form rectangular slabs. Refer to SELECTIONS for R-values and thickness options.
NOTE: When insulation abutting or covering recessed downlights is intended to be in contact with IC, CA 80, CA 135 luminaires the insulation must withstand a 30s Needle Flame test. Pink® Batts® insulation meets this requirement.

Components

2.4 FASTENERS

Insul anchors complete with retaining washer.

2.5 ADHESIVE TAPE

Pressure sensitive adhesive tape.

3 EXECUTION

3.1 STORAGE

Accept materials undamaged and dry and store in a location that protects them from the weather and damage. Avoid distortion, stretching, compression, puncturing and damage to edges of materials. Do not use damaged or wet insulation materials.

3.2 HANDLING

Wear protective clothing as necessary and when handling, avoid delamination or distortion of the rectangular form. Maintain full thickness unless compression is an installation system requirement.

3.3 INSPECTION

Before starting installation of blankets and slabs, check that the location and framing are free from moisture, that the cavities are not interconnected and that mesh, wall underlays and vapour barriers are in place.

Application - general

3.4 INSTALL INSULATION - GENERAL

Lay, install, fit and fix to NZBC H1/AS1 and to manufacturer's requirements. Install in housing to NZS 4218. Allow insulation to re-loft/relax prior to installation. Do not cover vents. Confirm with fireplace manufacturer for clearances; **Pink® Batts®** insulation need not be separated except if used in conjunction with, or attached to other heat sensitive materials. Lift up electrical wires, lighting transformers/controllers and lay the insulation underneath.

3.5 RECESSED LIGHT FITTINGS - CLEARANCE

Residential applications;

- Ensure new recessed downlights are one of the new classes classified, CA 80, CA 135, IC and IC - F
- Classification type CA 80, CA 135, insulation can abut the sides (wrapping around the sides)
- Classification type IC and IC - F, insulation can abut and cover over the top of the downlight
- Provide larger clearance where required by the light manufacturer.

Application, thermal insulation

3.6 INSTALL PINK® BATTS® CEILING INSULATION

Ensure that the product is installed dry; if wet replace before installation. If cutting is required, cut oversize by 5-10mm to ensure a friction fit. Insulate around vents (not over them) to allow unhindered ventilation.
Fit **Pink® Batts® Ceiling Insulation** beneath electrical wiring and plumbing. Install to the outer edge of the top plate. Maintain a 25mm gap clearance between the **Pink® Batts®** insulation and roof underlay. Refer to Pink® Batts® installation instructions for detailed information.

ABA20220988
APPROVED - Site Copy
Hastings District Council
20/09/2022

3.7 INSTALL PINK® BATTS® WALL INSULATION

Ensure the product is installed dry; if wet replace before installation. If cutting is required, cut oversize by 5-10mm to ensure a friction fit. Fill gaps around windows and doors with off-cuts. Insulate around vents (not over them) to allow unhindered ventilation.

Fit **Pink® Batts® Wall Insulation** behind electrical wiring and plumbing. Ensure there are no gaps, folds or undesirable compression at edges.

Refer to Pink® Batts® installation instructions for detailed information.

3.8 FIT PINK® BATTS® SKILLION ROOF INSULATION

Ensure that the product is installed dry; if wet replace before installation. If cutting is required, cut oversize by 5mm-10mm to ensure a friction fit.

Completion

3.9 CLEAN UP

Clean up as the work proceeds, so no spare offcuts or any other matter or item remain behind claddings or linings.

3.10 LEAVE

Leave work to the standard required by following procedures.

3.11 REMOVE

Remove debris, unused materials and elements from the site.

4 SELECTIONS

For further details on selections go to www.pinkbatts.co.nz.
Substitutions are not permitted to the following, unless stated otherwise.

Thermal insulation

4.1 PINK® BATTS® CLASSIC CEILING INSULATION

Location:	Living areas excluding garage ceiling
Brand:	**Pink® Batts® Classic Ceiling**
R-value:	R3.2
Thickness:	170mm

4.2 PINK® BATTS® CLASSIC WALL INSULATION

Location:	Exterior walls, internal garage walls, excluding garage exterior walls
Brand:	**Pink® Batts® Classic Wall**
R-value:	R2.2
Thickness:	90mm

4.3 PINK® BATTS® SKILLION ROOF INSULATION

Location:	Roof perimeter
Brand:	**Pink® Batts® Skillion Roof**
R value:	R3.2
Thickness:	115mm

ABA20220988
APPROVED - Site Copy
Hastings District Council
20/09/2022

5113G GIB® PLASTERBOARD LININGS

1 GENERAL

This section relates to the supply, fixing and jointing of GIB® plasterboard linings and accessories to timber and steel framed walls and ceilings to form:

- standard systems
- bracing systems
- wet area systems

Documents

1.1 DOCUMENTS

The following documents are specifically referred to in this section:

NZBC C/AS2	Protection from fire
NZBC E2/AS1	External moisture
BRANZ Technical Paper P21	BRANZ Technical Paper P21: A wall bracing test and evaluation procedure (2010)

1.2 MANUFACTURER/SUPPLIER DOCUMENTS

Manufacturer's and supplier's documents which refer to work in this section:
GIB® Site Guide (September 2018)
GIB® Wet Area Systems (April 2021)
GIB Ezybrace® Systems (August 2016)
GIB Ezybrace® Bracing Design Software
GIB Ezybrace® Bracing Supplement Document (December 2016)
GIB-Cove®
GIB® Goldline™ Platinum Tape-on Trims
GIB® UltraFlex high impact corner mould
BRANZ Appraisal 427 GIB® Wet Area Systems
BRANZ Appraisal 928 GIB EzyBrace® Systems

GreenTag Certification WWL:G102:2021:GR - GreenTag™ GreenRate Level A for:
GIB® Standard (10mm & 13mm)
GIB Braceline® (10mm & 13mm)
GIB Wideline® (10mm & 13mm)

GreenTag Certification WWL:G103:2021:GR - GreenTag™ GreenRate Level C for:
GIB Ultraline® (10mm & 13mm)

Manufacturer/supplier contact details

Company:	Winstone Wallboards
Web:	www.gib.co.nz
Telephone:	0800 100 442

Requirements

1.3 NO SUBSTITUTIONS

Substitutions are not permitted to any specified GIB® systems, GIB® system components, GIB® plasterboard, associated GIB® products or GIB® accessories.

1.4 INSTALLER WORK SKILLS AND QUALIFICATIONS

GIB® plasterboard fixers and plasterers to be experienced competent workers, familiar with GIB® plasterboard lining systems installation and finishing techniques. Submit evidence of experience on request.

Performance

ABA20220988
APPROVED - Site Copy
Hastings District Council
20/09/2022

1.5 INSPECTIONS AND ACCEPTANCE

Allow for inspection of the finished plasterboard surface:

- before applying sealer and
- before applying finish coatings or decorative papers,

so that after assessment of the type and/or angle of illumination and its effect on the completed decorative treatment, group approval and acceptance of the surface can be given.

1.6 BRACING REQUIREMENTS

Braced wall systems to NZS 3604 when tested to BRANZ Technical Paper P21, using:

- GIB Ezybrace® Systems (2016) and/or GIB Ezybrace® Bracing Design Software
- GIB Ezybrace® Bracing Supplement Document (December 2016)

Refer to drawings for location and type.

2 PRODUCTS

Materials

2.1 GIB® PLASTERBOARD

Gypsum plaster core encased in a face and backing paper formed for standard and water resistance. Refer to SELECTIONS for location, type, thickness and finish.
GIB® Standard plasterboard
GIB Wideline® plasterboard
GIB Aqualine® wet area plasterboard

2.2 GIB® COVING

GIB-Cove® plasterboard coving. Refer to SELECTIONS for profile and size.

Components

2.3 CEILING BATTENS

Timber.

2.4 SCREWS

GIB® Grabber® drywall type screws as follows:

Grabber® type	**Used for fixing:**
High Thread	GIB Ezybrace® or Standard systems to timber
Self Tapping	Standard systems to light gauge steel or timber
Wafer Head Needle Tip	Light gauge metal to timber not directly under plasterboard

Refer to GIB® requirements for appropriate details.

2.5 TAPE ON TRIMS AND EDGES

GIB® Goldline™ tape-on trims

2.6 METAL ANGLE TRIMS

GIB® galvanized steel slim angle trims.

Accessories

2.7 ADHESIVE

Timber frame:
GIBFix® One ultra low VOC water based wallboard adhesive

2.8 JOINTING COMPOUND

Bedding compound:	GIB Tradeset®, GIB Lite Blue®, GIB MaxSet®, GIB ProMix® All Purpose, GIB Plus 4®
Finishing compound:	GIB ProMix® All Purpose, GIB® Trade Finish®, GIB® Trade Finish® Lite, GIB ProMix® Lite, GIB® U-Mix, GIB Plus 4®, GIB Trade Finish® Multi
Cove:	GIB-Cove® Bond

2.9 JOINTING TAPE

GIB® jointing tape.

ABA20220988
APPROVED - Site Copy
Hastings District Council
20/09/2022

2.10 GAP FILLER

GIB® Gap Filler ultra low VOC multi-purpose acrylic flexible filler

3 EXECUTION

Conditions

3.1 DELIVERY, STORAGE & HANDLING OF PRODUCTS

Refer to 1270 CONSTRUCTION for requirements relating to delivery, storage and handling of products.

3.2 LEVELS OF PLASTERBOARD FINISH

Provide the selected plasterboard surfaces to the pre decorative levels of finish specified.

3.3 CONFIRM LEVELS OF PLASTERBOARD FINISH ACCEPTANCE

Before commencing work, agree in writing upon the surface finish assessment procedure towards ensuring that the quality of finish expectations are reasonable and are subsequently obtained and acceptable.

3.4 SUBSTRATE

Do not commence work until the substrate is plumb, level and to the standard required by the sheet manufacturer's requirements. Refer to GIB® Site Guide (September 2018).

3.5 TIMBER FRAME MOISTURE CONTENT

Maximum allowable moisture content for timber framing at lining: 18% or less for plasterboard linings. Refer to NZBC E2/AS1 and GIB® Site Guide (Sept 2018).

3.6 PROTECTION

Protect surfaces; cabinetwork, fittings, equipment and finishes already in place from the possibility of water staining and stopping damage. Refer to GIB® Site Guide (Sept 2018).

Application

3.7 LINING WALLS AND CEILINGS GENERALLY

Form to GIB® Site Guide (September 2018). Ensure bulk insulation thickness shall not exceed that of the wall framing.

3.8 BOARD ORIENTATION

Minimise joints by careful sheet layout using the largest sheet sizes possible, and generally fixing horizontally. Where part sheets are required for various stud heights they should be positioned so the cut sheet is as low as possible to keep joints below eye level.

3.9 FORM WET AREA SYSTEMS

Form to GIB Aqualine® Wet Area Systems requirements.

3.10 FORM BRACING SYSTEMS

Form bracing systems to:

- GIB Ezybrace® Systems (2016)

3.11 INSTALL COVES

Install to GIB-Cove® literature using GIB-Cove® Bond.

3.12 INSTALL TAPE-ON TRIMS

Install to GIB® Goldline™ Tape-on trims literature and/or GIB® Ultraflex high impact corner mould literature.

Finishing

3.13 FINISHING GENERALLY

To GIB® Site Guide (September 2018).

4 SELECTIONS

ABA20220988
APPROVED - Site Copy
Hastings District Council
20/09/2022

Plasterboard

4.1 GIB® STANDARD SYSTEMS WALLS

Location	Plasterboard type / Lining requirements	Thickness	Finish Level
Internal - excluding wet areas	GIB® Standard plasterboard	10mm	4

4.2 GIB® WATER RESISTANT SYSTEMS WALLS

Location	Plasterboard type / Lining requirements	Thickness	Finish Level
Internal wet areas	GIB Aqualine® plasterboard	10mm	4

4.3 GIB® STANDARD SYSTEMS CEILINGS

Location	Plasterboard type / Lining requirements	Thickness	Finish Level
Internal - excluding wet areas	GIB® Standard plasterboard	13mm	4

4.4 GIB® WATER RESISTANT SYSTEMS CEILINGS

Location	Plasterboard type / Lining requirements	Thickness	Finish Level
Internal wet areas	GIB Aqualine® plasterboard	13mm	4

4.5 GIB® BRACING SYSTEMS

Refer to:

- GIB Ezybrace® Systems (2016)

For bracing element location refer to drawn documentation.

Accessories

4.6 GIB® COVE®

Size/brand/type: 75mm GIB -Cove® Classic

ABA20220988
APPROVED - Site Copy
Hastings District Council
20/09/2022

5230 INTERIOR DOORS

1 GENERAL

This section relates to the supply and installation of interior doors.

1.1 RELATED SECTIONS

Refer to glazing section/s for glass type and thickness.

1.2 DOCUMENTS

The following documents are specifically referred to in this section:
NZS 3602 Timber and wood-based products for use in building

Requirements

2 PRODUCTS

2.1 TIMBER

To NZS 3602.

2.2 PROFILES, FACINGS, SCRIBERS AND ARCHITRAVES

Traditional profiles or proprietary profiles. Pencil radius corners of profiled schedules for paint finish.

2.3 DOORS, PAINTED

Doors as scheduled (without clashing strips).

2.4 DOOR HINGES

Size and gauge to carry door. 3 hinges per door.

3 EXECUTION

3.1 SITE MEASURE

Confirm framed openings on site for dimension, plumb and straightness prior to fabrication or ordering of timber joinery. Confirm lintel head and sill deflection for sliding or bi-fold door systems is within the manufacturer's specified tolerances. Provide not less than 10mm unless otherwise required.

3.2 EXECUTION GENERALLY

Manufacture to the methods, practices and processes contained in the unit standards for the National Certificate in Carpentry and the National Certificate in Joinery (cabinetry, exterior joinery, stairs).

3.3 FACTORY FIT HARDWARE

Factory fit the following:-

- Hinges

3.4 FACTORY FINISHING

Before delivery to site: -

- Brace square and provide protection to assemblies during delivery to site. Where factory glazed, indicate the presence of transparent glasses with whiting, tape or signs compatible with the glass type.

Internal doors

3.5 INTERNAL JOINERY FRAMES

Fabricate as detailed. Wedge and rigidly fix in place without distortion, plumb, and true to line and face. Pre drill for fixings through frame. Countersink and plug frames scheduled for clear finish.

3.6 DOOR FRAMES, SOLID REBATED

Fabricate as detailed. Hang doors to operate freely on hinges, sliding, or bi-fold gear and to the door manufacturer's requirements. Pre drill for fixings through frame. Countersink and plug frames scheduled for clear finish. Fit hardware.

© CIL Masterspec Jul 2022

ABA20220988
APPROVED - Site Copy
Hastings District Council
20/09/2022

3.7 DOOR LINERS

Heads and jambs finished minimum 18mm, with 10mm planted door stops. Width to match width of lined walls. Hang doors on hinges, sliding, or sliding-folding gear to the door manufacturer's requirements and to operate freely. Countersink and plug frames scheduled for clear finish. Fit hardware.

Completion

3.8 CHECK

Check and adjust operation of all sashes, doors, hardware and furniture.

3.9 TEMPORARY PROTECTION

On completion remove any temporary protection and leave ready for following work.

4 SELECTIONS

4.1 SOLID CORE DOOR

Brand/type:	Refer to owner for selection and manufacturer
Door facing:	Refer to drawings - sheet 3
Hardware:	Refer to owner

4.2 HOLLOW CORE DOOR, PAINT FINISH

Brand/type:	Refer to owner for selection and manufacturer
Hardware:	Refer to owner

Accessories

4.3 DOOR HINGES

Interior doors

Type:	Loose pin
Size:	89mm
Material:	Zinc-plated steel
Pin:	Loose-pin zinc-plated steel

ABA20220988
APPROVED - Site Copy
Hastings District Council
20/09/2022

5510 JOINERY & PROPRIETARY FIXTURES

1 GENERAL

This section relates to custom joinery fixtures and proprietary fixtures.
It includes:

- fabrication, including off site finishing and installation of cabinetwork and joinery items
- assembly, placing, installation of proprietary fixtures
- fitting out of specialty spaces and cupboards

Documents

1.1 DOCUMENTS

The following documents are specifically referred to in this section:

NZS 3602	Timber and wood-based products for use in building

Requirements

2 PRODUCTS

2.1 MEDIUM DENSITY FIBRE BOARD

Urea-formaldehyde resin bonded wood fibre sheet.

2.2 MEDIUM DENSITY FIBRE BOARD, MELAMINE

Urea-formaldehyde resin bonded wood fibre sheet overlaid both sides with melamine resin impregnated sheet.

2.3 PRE-FINISHED BACKING BOARD

Urea-formaldehyde resin bonded fine wood fibre sheet veneered one side with melamine sheet.

2.4 BENCHTOPS

As detailed on the drawings and as required for specified fittings and appliances.

2.5 CARCASE CONNECTORS

One-piece steel, straight deep-cut thread, fibre board screws with press fit plastic trim cap or tight joint connectors.

2.6 CARCASE FASTENERS

Knock down type centric sphere zinc alloy connectors with connecting bolts, sleeves and dowels, to suit each particular fastening location.

2.7 BUTT HINGES

Butt, broad butt, flush butt or overlay, steel, zinc-plated steel, stainless steel, or brass, to suit the location, or as detailed.

2.8 CONCEALED HINGES

All-metal zinc alloy with automatic spring and screw-fixed. Plastic button door stops.

2.9 DRAWER RUNNERS

Single action under mounted or side mounted powder coated runners or groove mounting type, precision running ball-mounted single-stage extension, bright steel finish system.

2.10 GLUES AND ADHESIVES

As approved by the manufacturer for the timber, timber product, or pre-finished timber product joint being used.

2.11 LIGHT DUTY COATING SYSTEM

Single pack, clear or pigmented nitro-cellulose or pre-catalysed lacquer.

2.12 MEDIUM DUTY COATING SYSTEM

Two pack, clear or pigmented acid catalysed coating.

ABA20220988
APPROVED - Site Copy
Hastings District Council
20/09/2022

3 EXECUTION

3.1 JOINERY FIXTURES GENERALLY

Execution to include those methods, practices and processes contained in the current syllabus for the National Certificate in Carpentry and the National Certificate in Joinery (cabinetry, exterior joinery, stairs). Take responsibility for the completed joinery fixtures including fittings included within fixtures and the on site installation.

3.2 SITE MEASURE

Site check and confirm dimensions after wall linings have been fixed. Verify positions of electric power outlets, wiring to light fittings included in joinery fixtures, water supplies and waste pipe locations.

3.3 FABRICATION QUALITY

Carry out machining within the practices required for the particular timber, wood product or pre-finished wood product being used. Machine drill and cut holes and recesses and form joints to the componentry manufacturer's requirements. Ensure work is accurate, square and true to line and face.

3.4 FABRICATE JOINERY FIXTURES

Carry out jointing, dowelling and other operations necessary for the proper assembly of the fittings as detailed, with fixings concealed unless otherwise detailed. Use glue joints where provision for shrinkage is not required, with contact surfaces, glueing and pressure all applied to the glue manufacturer's requirements. Locate and drive connectors and fasteners to the bolt manufacturer's requirements. Scribe fit adjustable shelves with 4 shelf pins and locate force fit pin holes at 50mm maximum centres in solid cheeks. Hang doors on concealed hinges.

3.5 MAKE CUT OUTS FOR APPLIANCES AND FITTINGS

Obtain fitting templates from the appliances and other fittings to be installed within joinery fixtures and bench tops. Ensure appliances and fittings can be installed with the required tolerances and clearances. Where bench tops are being provided under other work sections, provide templates and confirm dimensions to others.

3.6 FABRICATE DRAWERS

Construct drawers as detailed, using proprietary metal section drawer runners. Fit drawers with 3mm clearance into the drawer space.

3.7 TRANSIT AND DELIVERY

Load, transport and unload fittings without distortion or damage and keep covered to protect from the weather. Do not deliver fittings until floor, wall and ceiling surfaces are in place and the fittings can be placed in their final location.

3.8 ASSEMBLE PROPRIETARY ITEMS

Check all components are included. Assemble to manufacturer's instructions and to achieve finished item.

3.9 INSTALL JOINERY FIXTURES

Scribe fit on site and install level, square, plumb and true to line and face.

3.10 WARDROBE AND COAT CUPBOARD

Fit out with 300mm wide melamine faced board shelf, on ex 25mm scotia bead to back and ends. Exposed edges clashed to match. Fit a selected white powder-coated aluminium coat rail to the front edge of the shelf. Shelf heights as shown on the drawings.

3.11 STORAGE CUPBOARD

Fit out with 5 full depth melamine faced board shelves of thickness to suit span supported on ex 25mm beads along back and ends. Exposed edges clashed to match. Shelf heights as shown on the drawings.

ABA20220988
APPROVED - Site Copy
Hastings District Council
20/09/2022

3.12 COATING SYSTEM, PREPARATION

- Fill timber defects with proprietary wood filler. (e.g. cracks, holes, etc)
- Sand timber to a smooth even finish using 180 grit paper.
- Remove all sanding dust using air guns and tack rags.
- Ensure substrate is free from dust, grease, dirt and other contaminants.
- Ensure moisture content of the timber is less than 15% immediately before commencing coating operations.

3.13 COATING SYSTEM, APPLICATION

To coating manufacturer's requirements.

4 SELECTIONS

4.1 JOINERY

Supplier: Material and finishes in consultation with manufacturer and owner

4.2 WARDROBE ORGANISER SYSTEM

Manufacturer: Refer to owner

ABA20220988
APPROVED - Site Copy
Hastings District Council
20/09/2022

6221 TILING SYSTEMS

1 GENERAL

This section relates to the supply and installation of interior and exterior floor and wall tiles. It includes:

- Screeds and levelling compounds
- Waterproofing systems
- Tile adhesives
- Grouts and sealants
- Tiles
- All other required components and accessories necessary to complete installation

Documents

1.1 DOCUMENTS

The following documents are specifically referred to in this section:

NZBC E3/AS1	Internal moisture
BRANZ	Good practice guide: Tiling

Warranties

1.2 WARRANTY - MANUFACTURER/SUPPLIER

Provide a material manufacturer/supplier warranty:

10 years:	For materials

- Provide this warranty on the manufacturer/supplier standard form.
- Commence the warranty from the date of practical completion of the contract works.

1.3 WARRANTY - INSTALLER/APPLICATOR - FOR TILING SYSTEMS

Provide an installer/applicator warranty:

2 years:	For installation of tiling systems

- Provide this warranty on the installer/applicator standard form.
- Commence the warranty from the date of practical completion of the contract works.

1.4 WARRANTY - INSTALLER/APPLICATOR - FOR WATERPROOFING SYSTEMS

Provide an installer/applicator warranty:

5 years:	For installation of waterproofing systems

- Provide this warranty on the installer/applicator standard form.
- Commence the warranty from the date of practical completion of the contract works.

Requirements

1.5 QUALIFICATIONS - TILING SYSTEMS

Tilers to be experienced, competent trades people familiar with the materials and techniques specified.

1.6 QUALIFICATIONS - WATERPROOFING SYSTEMS

Waterproofers to be experienced, competent trades people familiar with the materials and techniques specified.

1.7 NO SUBSTITUTIONS

Substitutions are not permitted to any of the specified systems, components and associated products listed in this section.

1.8 ADHESIVES COMPATIBILITY

Adhesives selected for use on proprietary substrates or waterproof membranes to have documented compatibility approval from the respective manufacturers.

© CIL Masterspec Jul 2022

ABA20220988
APPROVED - Site Copy
Hastings District Council
20/09/2022

1.9 INTERNAL / EXTERNAL MOISTURE

Wet area membranes under tiled areas, NZBC E3/AS1 (interior) and to BRANZ Good Practice Guide: Tiling.

2 PRODUCTS

Materials

2.1 TILES

Refer to SELECTIONS for product selection.

Materials - preparation & underlays

2.2 PROPRIETARY SCREED

Manufactured screed systems.

Materials - waterproofing

2.3 LIQUID WATERPROOFING MEMBRANE

Refer to SELECTIONS for details.

Materials - adhesive and grout

2.4 TILE ADHESIVE

To the requirements.

2.5 PROPRIETARY GROUT

Cement based, compressible and to suit particular location/use.

Components

2.6 MOVEMENT AND EXPANSION JOINTS - RIGID JOINTS

Either, proprietary aluminium/brass with rubber or foam and compound infill, or rigid stabilised PVC sides with flexible central section.

2.7 MOVEMENT JOINT SEALANT

To BRANZ Good practice guide: Tiling.

- Neutral cured sealant for areas where waterproof membranes are used or where used against aluminium.
- Acid cured sealant except for areas where waterproof membranes are used or where used against aluminium.

Note: Check compatibility of membrane and sealant, use bond breaking tape to separate them if required.

Accessories

2.8 TILE EDGE TRIMS

Refer to SELECTIONS for product selection

3 EXECUTION

3.1 DELIVERY, STORAGE AND HANDLING

Take delivery of materials and goods and store on site and protect from damage.
Protect finished surfaces, edges and corners from damage.
Move/handle goods in accordance with manufacturer's requirements.
Reject and replace goods that are damaged or will not provide the required finish

3.2 CHECK TILES

Check tiles to ensure that they are as specified, from the same batch, of a consistent colour and pattern and sufficient to complete the work. Reject tiles that vary widely in colour or pattern. Reject tiles that are damaged.

ABA20220988
APPROVED - Site Copy
Hastings District Council
20/09/2022

3.3 CONFIRM LAYOUT

Before commencing work confirm the proposed layout of tiles and expansion joints and other visual considerations of the finished work.

3.4 SETTING OUT

Before commencing the setting out confirm the number and location of cut tiles. Minimise in number with no cut tiles less than half size and only at the perimeter of the work.

3.5 GENERALLY

Prepare surface and complete tiling work in accordance, as modified by BRANZ Good practice guide: Tiling.

Conditions

3.6 INSPECT BACKGROUND CONDITIONS

Ensure that all services and accessories are in place and located to suit the tile layout, and that the substrate, background and adjoining surfaces (with the preparation called for in this section) are of the quality necessary to allow tiling of the required standard.

Inspect background and substrate materials for any conditions unsuitable for tiling over. Substrate material must be even and true with a maximum variation in plane of no greater than 4mm in every 2m.

Do not commence work until the affected area is rectified. Commencement of installation constitutes acceptance of site conditions.

3.7 SUBSTRATE TEMPERATURE

Do not carry out tiling where the substrate temperature is below 5°C or above 40°C.

3.8 MOISTURE CONTENT

Ensure concrete floors & concrete and/or concrete block walls are cured and dry. Ensure moisture content is such that shrinkage is complete and thermal movement has been accommodated.

If in doubt check for moisture content by hygrometer. Do not proceed with tiling work until readings for the whole area show 75% relative humidity or less.

Application - preparation

3.9 PREPARE SUBSTRATES

Prepare backgrounds as modified by BRANZ Good practice guide: Tiling. All surfaces to be structurally sound, dry, clean and free from movement, dirt, dust, oil, grease, wax, curing compounds, release agents and any other loose or contaminating materials.

Ensure surfaces are flat and true to a tolerance of ± 4mm in 2 metres from the required plane. Remove projections, unevenness and loose material to leave a clean dust and dirt free surface.

Suitably prepare backgrounds and substrates in accordance with the manufacturer's instructions of the tiling installation products for the relevant substrate type.

3.10 PRIME SUBSTRATES

Surfaces should be primed as per manufacturer's instructions for the selected products and substrate types.

Application - movement joints

ABA20220988
APPROVED - Site Copy
Hastings District Council
20/09/2022

3.11 FORM MOVEMENT AND EXPANSION JOINTS

Install movement joints to go right through the tile and bed to the background, maintaining any waterproofing. Ensure any slip layer backing (bond breaker) required, is installed.
Joint width minimums:

- 4-6mm interior tiles on concrete (with low moisture content)

In wall tiling provide joints at; internal vertical corners, as well as joints at, floors, columns/beams, nibs, hobs and similar. Provide joints around sanitary fixtures, around fixtures interrupting the tile surface, at junctions with joinery fixtures, including window and door frames and built in cupboards, and at changes in substrate or background. In large area wall tiling provide vertical joints at not more than 3.6 metres spacing along the length of a wall and horizontal joints at each storey rise in the height of a wall, and over all existing substrate expansion joints.

In large areas of floor tiling provide joints at not more than 4 metres spacing in both directions. Provide expansion joints, at the perimeter of tile floors, at changes of level or slope, around structural features, changes in substrate, around sanitary fixtures and other fixtures interrupting the tile surface, and over all existing substrate expansion joints.

3.12 MOVEMENT AND EXPANSION JOINTS, INSTALL RIGID JOINTS

Metal or plastic joints.

Accurately locate as detailed and fix joints in situ, with the bedding, or on top of the bedding, to finish flush with the installed tile and to the tile manufacturer's requirements. Fit and fix rubber/rubber compound inserts to finish flush.

3.13 MOVEMENT AND EXPANSION JOINTS, INSTALL COMPOUND/SEALANT FILL

Carefully clean out the joint, insert the backing rod if required and fill with compound/sealant placed by gun. After the correct interval, finish the surface off smooth, and flush on flat areas or concave in corners, to the compound/sealant manufacturer's requirements.

Application - waterproofing

3.14 INSTALL WATERPROOFING MEMBRANE - INTERIOR WET AREAS

Install waterproofing membrane to manufacturers requirements and BRANZ Good Practice Guide, Tiling. Reinforce all junctions of the waterproofing membrane to BRANZ Good practice guide: Tiling. Unless otherwise specified or shown on the drawings, install minimum areas of waterproof membrane as follows:

Enclosed shower cubicle

- Up wall to 300mm above fixed shower rose or to ceiling for flexible rose, must be at least 1800mm above base.
- Along all tiled walls and sealed to shower screens.
- To tiled shower base and hobs (upstands).

Bath (no shower over)

- Around the bath to 300mm away from the bath in all directions, also waterproof under the bath.

Splashback to a vanity

- Up wall from floor and behind the vanity, to 150mm above and beyond each side of vanity.
- To floor under the vanity to match wall waterproofing and at least 600mm from wall.

3.15 FLOOR SCREEDS

Form screeds to manufacturer’s instructions with a deviation from plane of not more than 5mm over 3 metres.

3.16 FLOOR FALLS

Form screeds, to manufacturer’s instructions, in areas where water is used in significant amounts with a deviation from plane of not more than 5mm over 3 metres. Unless otherwise specified form screeds with the following falls:
Unless stated otherwise provide minimum fall gradients to BRANZ Good Practice Guide - Tiling.
1 : 60 minimum For enclosed shower bases

Application –tile installation generally

ABA20220988
APPROVED - Site Copy
Hastings District Council
20/09/2022

3.17 FITTING TILES

Setting out, cutting and fitting of tiles to be to the requirement. Ensure cut edges are smooth and installed without jagged or flaked edges. Always use whole tiles or if tiles have to be cut the largest portion of a cut tile possible. Maintain the heights of wall tile work in full courses to the nearest dimension. Within allowed tolerances, ensure corners of tiles are flush and level with corners of adjacent tiles. Keep joint lines, including mitres, straight and of an even width. Fully bed trim units, moulded or shaped pieces and other accessories with an appropriate bedding material. Fix accessories level, plumb and true to the designated projection at detailed locations and heights.

3.18 TILE FINISH AND JOINTS

Ensure finished surfaces are flat and true to a tolerance of ±4mm in 2 metres from the required plane. Clean surplus bedding material from joint spaces and tile surface. Ensure joint widths are consistent throughout the installation, measured at the tile face. Ensure joint alignment is consistent throughout the installation and to a tolerance of ±4mm in 2 metres from the detailed joint alignment.

3.19 ADHESIVE APPLICATION

Apply and float thick or thin bed of modified cement based adhesive to bed thickness to the adhesive manufacturer's requirements. Ensure that the whole of the back of the tile is in good contact with the adhesive with no voids. Remove a tile periodically during installation to ensure correct coverage. Do not fix tiles over skinned adhesive. If required, mix adhesive to manufacturer's instructions.

Notched trowel method

- Adhesive application to meet the requirement. Notched trowel sizes shall be 4.5mm x 4.5mm x 4.5mm (mosaics) 6mm x 6mm x 6mm, 10mm x 10mm x 10mm, 12mm x 12mm x 12mm. Use an appropriately notched trowel to achieve full coverage.

Buttering method

- Adhesive application to meet the requirement.

Tiles in awkward locations

- The buttering method may be required, or fixing might be necessary to achieve full bedding, even though the notched trowel method is used generally.

3.20 INSTALL TRIMS

Accurately locate and fully bed edge trim units, dividing strips, moulded or shaped pieces and other accessories with an appropriate bedding material. Fix accessories level, plumb and true to the designated projection at detailed locations and heights.

Application - grouting

3.21 APPLY PROPRIETARY GROUTING

Remove spacers. Prepare joints, mix and apply grout and finish off to the grout manufacturer's requirements, to finish the grout uniform in colour, smooth and without voids, pinholes or low spots.

Application - sealing

3.22 SEALING

Apply selected sealer to tiling in accordance with manufacturer's requirements.

Cleaning

3.23 CLEAN TILES

Upon completion of setting and grouting, thoroughly sponge and wash the tiles to leave them completely clean and without blemish. Finally polish glazed tiles with a clean dry cloth.

Completion

3.24 ROUTINE CLEANING

Carry out routine trade cleaning of this part of the work including periodic removal all debris, unused and temporary materials and elements from the site.

ABA20220988
APPROVED - Site Copy
Hastings District Council
20/09/2022

3.25 DEFECTIVE OR DAMAGED WORK

Repair damaged or marked tiles. Replace damaged or marked tiles where repair is not possible or will not be acceptable. Leave work to the standard required for following procedures. Ensure tiles are not disturbed by foot traffic for at least 24 hours after laying and after grouting.

3.26 PROTECTION

Provide the following temporary protection of the finished work:
Provide protection to floor tiles by laying sheet material such as insulating board for the period between completion of laying and completion of the contract works.

4 SELECTIONS

Substitutions are not permitted to the following, unless stated otherwise.

Materials - Tiles

4.1 FLOOR TILES

Location:	Entry, kitchen, W.C, bath, ensuite
Type:	Owner selected

4.2 WALL TILES

Location:	Bath, ensuite
Type:	Owner selected

Spare Tiles

4.3 SPARES

Tile:	Retained by owner

Materials - waterproofing

4.4 LIQUID WATERPROOFING MEMBRANE

Location:	Bath, ensuite
Manufacturer:	Wet-seal New Zealand Ltd
Brand/type:	Wet-seal Fibrecoat Wet Area Waterproofing Membrane / reinforced waterproof membrane

ABA20220988
APPROVED - Site Copy
Hastings District Council
20/09/2022

6700 PAINTING GENERAL

1 GENERAL

This section relates to the general matters related to painting work

1.1 ABBREVIATIONS

The following abbreviations are used throughout this part of the specification:

MPNZA	Master Painters New Zealand Association Inc.
VOC	Volatile organic compound

Documents

1.2 DOCUMENTS

The following documents are specifically referred to in this section:

WorkSafe	Guidelines for the provision of facilities and general safety in the construction industry
MPNZA	Specification manual
MPNZA	Health and Safety Programme

Health and Safety at Work Act 2015

Requirements

1.3 NO SUBSTITUTIONS

Substitutions are not permitted to any specified manufacturer's system, or associated components and products.

1.4 QUALIFICATIONS

Painters to be a member of MPNZA and experienced competent workers, familiar with the materials and the techniques specified.

1.5 HEALTH AND SAFETY

Refer to the requirements of the Health and Safety at Work Act 2015 and WorkSafe: Guidelines for the provision of facilities and general safety in the construction industry. If the elimination or isolation of potential hazards is not possible then minimise hazards in this work on site by using the proper equipment and techniques as required in the MPNZA Health and Safety Programme. Supply protective clothing and equipment. Inform employees and others on site of the hazards and put in place procedures for dealing with emergencies.

1.6 MATERIAL SAFETY DATA SHEET

Obtain from each paint manufacturer the material safety sheet for each product used. Keep sheets on site and comply with the required safety procedures.

Warranties

1.7 WARRANTY

Warrant this work under normal environmental and use conditions against failure.

2 years:	Warranty period

Performance

1.8 MANUFACTURER'S INSPECTION

Allow the paint manufacturers to inspect the work in progress and to take samples of their products from site if requested.

1.9 INSPECTION OF WORK

Inspection of the whole of the work at each of the stages scheduled may be made. Agree a programme that will facilitate such inspection, including notification when each part and stage of the work is ready for inspection.

2 PRODUCTS

ABA20220988
APPROVED - Site Copy
Hastings District Council
20/09/2022

Materials

2.1 PAINT TYPES

Use the manufacturer's complete system and only the products specified.

2.2 MATERIALS GENERALLY

Use only the Manufacturer's products which are guaranteed for their consistency and performance under approval, prepared, mixed and applied as directed in the Manufacturer's specification sheets, specification manuals and product data sheets.

2.3 THINNERS AND ADDITIVES

Only use thinners or additives within the stated limits for the particular situations specified.

Accessories

2.4 FILLERS

For recommendations on; fillers, stopping, paint strippers, cleaning agents, etching solutions, mould inhibitors, rust inhibitors, knotting and other commodities used for the surface preparation, refer to the manufacturer of the specified coating.

3 EXECUTION

Conditions

3.1 EXECUTION

To conform to manufacturer's requirements and those methods, practices and techniques contained in the MPNZA Specification manual, and WorkSafe: Guidelines for the provision of facilities and general safety in the construction industry.

3.2 PREPARE

Prepare surfaces to the coating manufacturer's requirements.

3.3 COATED SURFACES

Ensure that substrate surfaces are able to achieve the specified finish.

3.4 PRE-PRIMED SURFACES

Sand down any breakdown or damage of the primer to a sound surface and immediately re-prime.

3.5 BRUSH DOWN

Brush down surfaces immediately before application, to remove dust, dirt and loose material.

3.6 COMPATIBILITY

Check that materials are as required by the paint manufacturers for the particular surface and conditions of exposure, and that they are compatible with each other. Use paint from the same manufacturer for each paint system. If not compatible, obtain instructions before proceeding.

3.7 TREATED SURFACES

Where surfaces have been treated with preservatives or fire retardants, check with the treatment manufacturer that coating materials are compatible with the treatment and do not inhibit its performance. If they are not compatible, obtain instructions before proceeding.

3.8 BACK PAINTING

Co-ordinate with cladding and/or lining installer as to who will do the work and timing.

Exterior
For exterior cladding and trim that require on site finishing, paint the back and exposed bottom edges at the base of the cladding (generally, bottom plate overhang and horizontal flashings) to the manufacturer's requirements, but at least to 150mm up from base. Coating to match front finish, generally apply 2 coats or 1 coat if pre-primed.

Interior
For lining and trim that require on site finishing and/or back painting (usually wet areas), paint the back and exposed bottom edges at the base of the lining, to the manufacturer's requirements, but at least to 150mm up from base. Coating to match front finish, generally apply 2 coats or 1 coat if pre-primed, or if no front finish seal to manufacturer's requirements.

ABA20220988
APPROVED - Site Copy
Hastings District Council
20/09/2022

3.9 ANCILLARY SURFACES

The coatings listed in schedules and elsewhere are of necessity simplified. Coat ancillary exposed surfaces to match similar or adjacent materials or areas, except where a fair-faced natural finish is required or items are completely prefinished. In cases of doubt obtain instructions before proceeding.

3.10 HARDWARE

Do not paint hinges or hardware that cannot be removed. If items can be removed, carefully remove hardware, fixtures and fittings before commencing work. Set aside where they cannot be damaged or misplaced and replace on completion.

3.11 PROTECTION

Use dropsheets, coverings and masking necessary to protect adjoining fixtures, fittings and spaces from paint drops, spots, spray and damage.

Preparation - unpainted and pre-primed timber and wood based products

3.12 MOISTURE CONTENT

Ensure moisture content at the time of application is near to the equilibrium moisture content pertaining to the particular locality in which the timber is used, without any excessive moisture content gradient between core and surface.

3.13 PREPARING DRESSED TIMBER

Ensure dressed timber is smooth, free from raised or woolly grain, planing burrs or other machining defects. Slightly round or ease sharp edges to ensure they can be properly coated. Sand timber to bring up to a smooth finish along the direction of the grain. Sand timber back to new condition timber that has been weathered.

3.14 PREPARING ROUGH SAWN TIMBER

Thoroughly brush along the direction of the grain to remove dust and dirt.

3.15 PREPARING PRE-PRIMED TIMBER

Check pre-prime coat for damage, powdering, weathering or loss of adhesion. Where primer is sound, thoroughly brush along the direction of the grain to remove dust and dirt. If there is doubt, sand back and re-prime.

3.16 TIMBER SPECIES

Check that the preparation and paint system is suitable for the timber species.

3.17 PREPARING DAMAGE AND DEFECTS

Scrape clean loose or soft material holes, depressions, resin or gum pockets, knot holes, surface splits, checks, or any localised decay. Apply primer and/or sealer specified and fill these areas with linseed oil putty or other appropriate filler.

3.18 FIXINGS

Take timber fixings below the painted or clear finished surface. Leave corrosion resistant timber fixings flush with clear finished surfaces.

3.19 CLEANING

Remove grease and oil by wiping down with solvent or water-based degreasing agent. Remove resin by wiping down with solvent or water-based degreasing agent or heating and scraping. Remove sanding dust. Bad staining may be untreatable and require replacement of timber, discuss with paint manufacturer and main contractor.

Preparation - unpainted linings

3.20 PREPARING FIBROUS PLASTER

Check for and remove release agents and other contaminants by washing with clean water or solvent and allow to dry. Fill cracks and surface imperfections with patching plaster and lightly sand smooth. Remove dust.

3.21 PREPARING PLASTERBOARD

Check that joints are prepared to a smooth level surface finish. Fill cracks and surface imperfections with the sheet manufacturer's required stopping compound and lightly sand smooth. Remove dust.

ABA20220988
APPROVED - Site Copy
Hastings District Council
20/09/2022

Preparation - unpainted plastics

3.22 PREPARING UNPLASTICISED POLYVINYL CHLORIDE (UPVC)

Wipe surfaces with mineral turpentine, methylated spirits or white spirit. Lightly abrade with sandpaper and dust off. Proceed immediately with topcoats applicable for walls or timber finishes.

Preparation - painted surfaces generally

3.23 SURFACE PREPARATION

Refer to the Manufacturer's specification sheets and product data sheets. Carry out the preparatory work required by them for each of the substrates.

For interior surfaces such as paper faced plasterboard use the Manufacturer's recommended finishing compound as an aid to achieving a Level 5 finish.

3.24 GAP FILLING

Fill cracks, holes, indented and damaged surfaces with putty, plaster filler, wood filler, or plastic wood, as appropriate and in accordance with the paint manufacturer's requirements. Allow to dry or set before sanding back level with the surface. Prime coat or seal the timber before using putty. Wet cement or gypsum base plasters before applying filler. Use only Portland cement base types, or water-insoluble organic-based gap fillers in exterior or wet areas.

Application - before applying final coatings

3.25 OFF-SITE WORK

Carry out off-site preparation and coating under cover, in a suitable environment and with adequate lighting. Store items both before and after coating in a clean, dry area, protected from the weather and mechanical damage, properly stacked and spaced to permit air circulation and to prevent sticking of surfaces.

3.26 PRIMING JOINERY

Before priming preservative treated timber ensure that any cut surfaces have been retreated. Liberally coat end grain, allow to soak in and then recoat. Ensure LOSP. treated joinery has dried sufficiently to lose odour.

3.27 CONCEALED JOINERY SURFACES

Apply off-site coatings to all surfaces including those which will be concealed when incorporated into the building.

3.28 CONCEALED METAL SURFACES

Apply primer to suit the coating system to all metal surfaces which will be concealed when incorporated into the building.

3.29 DOORS

Prime or seal and paint all six faces of doors before hanging.

3.30 BEAD GLAZING

Before glazing apply the first two coats, or the primer and one undercoat, to rebates of stained, varnished or painted joinery and beads.

3.31 PUTTY GLAZING

Follow putty manufacturers recommendations for application, drying, and painting. Ensure that the putty is fully protected by the coating system as soon as it is sufficiently hard.

Application - generally

3.32 PAINTING GENERALLY

Comply with the paint manufacturer's requirements and any additional requirements in this specification.

3.33 MIXING

Thoroughly mix paints. Lift any settled pigment and ensure the paint is homogenous.

ABA20220988
APPROVED - Site Copy
Hastings District Council
20/09/2022

3.34 ENVIRONMENT

Paint exterior surfaces only in favourable weather conditions:

- warm dry days without frost or heavy dews
- avoid painting in direct sunlight any surfaces that absorb heat excessively
- as far as possible apply paint in the temperature range 15°C to 25°C
- do not paint if temperatures fall outside the range of 10°C and 35°C unless paints with the necessary temperature tolerance have been specified
- do not apply solvent borne paint if moisture is present on the surface

3.35 SEQUENCE OF OPERATIONS

Painting work to generally follow the following sequences:

- back painting and pre-installation painting, then post-installation exposed-face painting
- complete surface preparation before commencing painting
- apply paint in the specified sequence using the specified paint
- allow full drying time between coats to the paint manufacturer's requirements
- do not expose primers, undercoats and intermediate coats beyond manufacturers stated instructions before applying the next coat
- finish broad areas before painting trim
- ensure batch numbers of tins are matched for whole areas
- internally, paint ceilings before walls and walls before joinery, trim and other items

3.36 PAINT APPLICATIONS

Select brush, roller, or pad and apply paint to the requirements of the paint manufacturer and to obtain a smooth even coating of correct thickness, uniform gloss and colour.

3.37 DRYING TIME

Before handling or applying the next coat of paint, give each coat the full drying time as required by the paint manufacturer. Ensure that surfaces are dry and that condensation does not occur before the paint reaches surface-dry condition.

3.38 LIGHTLY SAND

Lightly sand primers, sealers, undercoats and intermediate coats to remove dust pick-up, protruding fibres and coarse particles. Remove dust immediately before applying the next coat.

3.39 DEFECTIVE WORK

Correct defective work immediately and re-coat as required, following precisely the paint system specified.

3.40 EACH COAT

Each coat of paint and the completed paint system to have the following qualities and properties:

- uniform finish, colour, texture, sheen and hiding power
- the specified number of coats applied
- no blemishes such as runs, sags, crinkling, fat edges, entrained paint skins, hairs, dust, bare or starved patches, cracks, brush marks, ladder marks and blistering
- proper covering of corners, crannies, thin edges, cracks, end grain and other difficult places of application

Completion

3.41 CLEAN

Clean adjoining surfaces, glass and fittings of any paint contamination. Clean off glass indicators at completion of the building works. Clean glass inside and out to a shining finish.

3.42 CLEAN EQUIPMENT

Use the Manufacturer's environmental wash system for the cleaning of water-based paint and plasters from brushes, rollers, plastering or spray equipment to separate the solids from the water component for safe disposal.

3.43 LEAVE

Leave the whole of this work uniform in gloss and colour, of correct thickness, free from painting defects, clean and unmarked and to the standard required by following procedures.

3.44 REMOVE

Remove dropsheets, coverings and masking to leave surrounding surfaces and areas clean, tidy and undamaged. Remove debris, unused materials and elements from the site.

ABA20220988
APPROVED - Site Copy
Hastings District Council
20/09/2022

3.45 REPLACE HARDWARE

Replace hardware without damage to it or the adjoining surface. Leave properly fitted and in working order.

4 SELECTIONS

4.1 SELECTIONS

Refer to owner for paint manufacturer system selection.

ABA20220988
APPROVED - Site Copy
Hastings District Council
20/09/2022

7120 HOT & COLD WATER SYSTEM

1 GENERAL

This section relates to piped potable water supply systems from the network utility supply authority water main to designated points and appliances, the installation of hot water heating appliances, distributing piped hot water to other appliances, and the installation of valves.

Documents

1.1 DOCUMENTS

The following documents are specifically referred to in this section:

NZBC B2/AS1	Durability
NZBC G12/AS1	Water supplies
NZBC H1/AS1	Energy Efficiency
Plumbers, Gasfitters and Drainlayers Act 2006	
NZ Backflow Testing Standard:	NZ Backflow Testing Standard 2011, Field testing of backflow prevention devices and verification of air gaps

Requirements

1.2 QUALIFICATIONS

Plumbers to be experienced competent workers, familiar with the materials and the techniques specified. Carry out all work under the direct supervision of a certifying plumber under the Plumbers, Gasfitters and Drainlayers Act 2006.

Performance

1.3 TESTING - TO NZBC G12/AS1

Test to NZBC G12/AS1 for hot and cold water.

- Test to a pressure of1500 kpa for period not less than 15 minutes.

Confirm the timing before carrying out any tests. Supply potable water and the apparatus needed. Slowly fill service pipes with water to exclude air. Test and ensure there is no measurable loss of pressure for the minimum period. Slowly fill distribution pipes with water to exclude air. Ensure that with draw-off taps closed the system must remain water-tight.

2 PRODUCTS

2.1 COPPER PIPE

Complete with copper-alloy compression fittings or crox type joints and seal ring compression joints complete with fittings and accessories brand matched to the pipe manufacturer's requirements with durability to NZBC B2/AS1 and NZBC G12/AS1.

2.2 PVC-U PIPE

Complete with fittings and accessories brand matched to the pipe manufacturer's requirements with durability to NZBC B2/AS1 and NZBC G12/AS1.

2.3 CROSS LINKED POLYETHYLENE PIPE

Cross Linked Polyethylene and fittings with a minimum pressure capability of 1200 kPa complete with fittings and accessories brand matched to the pipe manufacturer's requirements with durability to NZBC B2/AS1.

2.4 VALVES

Pressure reducing or limiting valve, filter, non-return valve, cold water expansion valve, pressure relief or temperature valve, pressure relief valve and isolating valves.

2.5 BACKFLOW PREVENTION DEVICES

Provide backflow prevention devices where it is possible for water or contaminants to backflow into the potable water supply. Refer to NZBC G12/AS1.

2.6 TEMPERING VALVE

Tempering valve to NZBC G12/AS1.

© CIL Masterspec Jul 2022

ABA20220988
APPROVED - Site Copy
Hastings District Council
21/09/2022

Materials - Hot water heating appliances

2.7 ELECTRIC HOT WATER CYLINDER, MAINS PRESSURE

Ceramic-coated steel thermal storage cylinder, insulated and complete with required fittings.

Components

2.8 INSULATION

Pre-formed pipe sections complete with bends and fittings, with fixing tape to the manufacturer's requirements and to NZBC H1/AS1.

2.9 PROTECTIVE TAPE

Plasticised PVC tape system with primer, mastic fixing and outer coating.

3 EXECUTION

3.1 EXECUTION GENERALLY

Generally carry out the whole of this work and tests to NZBC G12/AS1.

3.2 HANDLE AND STORE

Handle and store pipes, fittings and accessories to avoid damage. Store on site, under cover on a clean level area, stacked to eliminate movement and away from work in progress.

Store tapware in a shelved, dry and securely locked area. Retain tapware in the manufacturer's original packaging, complete with all fixings and installation instructions. Label each unit separately with its space/fixture number to match.

3.3 CORE HOLES AND SLEEVES

Review location and fit core holes and sleeves as needed throughout the structure in conjunction with the boxing, reinforcing and placing of concrete. Strip core holes and make good after installation of pipework.

3.4 CONCEAL

Conceal pipework within the fabric of the building unless detailed otherwise. Satin finish chrome plate exposed work, complete with matching ferrule at the surface penetration.

3.5 CORROSION

Separate all metals subject to electrolytic action from each other and from treated timber, concrete and other lime substances by space, painting of surfaces, taping, or separator strips.

3.6 THERMAL MOVEMENT

Accommodate movement in pipes resulting from temperature change by the layout of the pipe runs, by expansion joints and by sleeving through penetrations.

3.7 PIPE SIZE

Flow rates to each outlet to be no less than those given in NZBC G12/AS1. Pipe size as determined in NZBC G12/AS1.

3.8 ELECTROLYTIC ACTION

Avoid electrolytic action by eliminating contact or continuity of water between dissimilar metals.

3.9 EXCAVATE

Excavate for the water main to a firm, even trench base in straight runs. Allow to backfill.

Application - Jointing

3.10 JOINTING COPPER PIPE

Braze pipe, fit alloy compression fittings, crox type joints and seal ring compression joints to NZBC G12/AS1.

3.11 JOINTING PVC-U PIPE

Solvent welded joints using spigots and sockets, flanged joints and seal ring compression joints.

ABA20220988
APPROVED - Site Copy
Hastings District Council
20/09/2022

3.12 JOINTING POLYETHYLENE PIPE

Seal ring compression joints and electrofusion to NZBC G12/AS1.

Application - Pipework installation

3.13 WATER SUPPLY CONNECTION

Arrange with the network utility operator for a connection to the water main and from there through a water meter and gate valve. Provide back flow prevention to NZBC G12/AS1.

3.14 POTABLE WATER SUPPLY PIPEWORK INSTALLATION

From connection point, run pipes complete with all fittings, support and fixing, joins and install to manufacturers specifications. Size the pipes and branches in straight runs to deliver the acceptable flow rate to NZBC G12/AS1. Allow for the expected concurrent use of adjoining fixtures and size the piping layout to eliminate loss of pressure at any point by simultaneous draw-off. Pipework support spacing to be firmly fixed and buffered to eliminate noise and hammer, with preformed tee-connection take-offs and branches, with machine made 3 diameter bends, complete with necessary valves and fittings. Conceal pipework and pressure test before the wall linings are fixed.

3.15 HOT WATER PIPEWORK

Use a take-off spigot to give separate branches to each fitting, lay out pipes with support spacing to NZBC G12/AS1. Fix firmly and buffer to eliminate noise and hammer, with preformed tee-connection take-offs and branches, and preformed 3 diameter bends, complete with all necessary valves and fittings

Lag all pipes with rigid insulation to the manufacturer's requirements and G12/AS1.

3.16 EQUIPOTENTIAL BONDING METALLIC WATER SUPPLY PIPES

If it is an electrical requirement, before enclosing, ensure metallic water supply pipes and metallic sanitary fixtures are equipotential bonded (or at least conductor cable attached) to NZBC G12/AS1.

3.17 IN-LINE FILTER

Install an in-line filter immediately adjacent to the main isolating valve at the point of entry to the building, in an accessible position to allow for easy cleaning.

Application - Hot water systems

3.18 HOT WATER CYLINDER INSTALLATION GENERALLY

Install hot water cylinders complete to the manufacturer's requirements and to NZBC G12/AS1.

3.19 SEISMIC RESTRAINTS - NON-GAS WATER HEATING APPLIANCES

Non-gas (electric, wet-back, solar etc) water heating appliances to be restrained to manufacturer's requirements and NZBC G12/AS1.

3.20 INSTALLING HOT WATER PIPE INSULATION

Insulate all hot water pipes to NZBC H1/AS1 and to the insulation manufacturer's instructions. Cut insulation sections tight between timber framing.

3.21 INSTALL ELECTRIC HOT WATER CYLINDERS AND BOILING CYLINDERS

Install where shown complete with all the necessary fittings to the cylinder manufacturer's requirements and in accordance with NZBC G12/AS1.

3.22 INSTALL STORAGE HOT WATER CYLINDER OVERFLOW TRAY

Install drained overflow tray to storage hot water cylinder to NZBC G12/AS1.

3.23 INSTALL TEMPERING VALVE

Install 1 metre minimum from outlet of hot water cylinder and to manufacturer's instructions. Install copper pipework for 1 metre minimum downstream of tempering valve prior to connection of non-metallic pipework.

3.24 PENETRATIONS

Provide and fit collars and escutcheon plates to match the pipework at all penetrations through constructions.

Installation - Valves

ABA20220988
APPROVED - Site Copy
Hastings District Council
20/09/2022

3.25 INSTALLING BELOW GROUND ISOLATING VALVE

Install all below ground items such as main isolating valves and water meters in preformed concrete pits or approved equivalent.

3.26 INSTALLING APPLIANCE ISOLATING VALVES - CONCEALED

Install isolating valves for appliances in accessible positions. Locate in adjacent cupboards and position to allow for easy connection and operation.

3.27 INSTALLING BACKFLOW PREVENTION DEVICE

Provide and install backflow prevention device as near as practicable to the potential source of contamination, and in an accessible position for maintenance and testing to NZ Backflow Testing Standard.

Completion

3.28 LABEL

Label all pipework with permanent adhesive markers at 3 metre minimum intervals.

3.29 CLEAN IN-LINE FILTER

Clean all in-line filters on completion of works.

3.30 REPLACE

Replace damaged or marked elements.

3.31 LEAVE

Leave work to the standard required by following procedures.

3.32 REMOVE

Remove debris, unused materials and elements from the site.

4 SELECTIONS

Water main

4.1 POLYETHYLENE WATER MAIN

Size:	25mm outside diameter (i.e. DN 25)

Hot water systems

4.2 ELECTRIC HOT WATER CYLINDER, MAINS PRESSURE

Brand:	Rheem
Model size:	180L (confirm with owner)

ABA20220988
APPROVED - Site Copy
Hastings District Council
20/09/2022

7151 SANITARY FIXTURES, TAPWARE & ACCESSORIES

1 GENERAL

This section relates to the supply and installation of sanitary fixtures, tapware and sanitary accessories.

Documents

1.1 DOCUMENTS

The following documents are specifically referred to in this section:

NZBC E3/AS1	Internal moisture
NZBC F2/AS1	Hazardous building materials
NZBC G1/AS1	Personal hygiene
NZBC G12/AS1	Water supplies
AS/NZS 3500.2	Plumbing and drainage - sanitary plumbing and drainage
NZS 4223.3	Glazing in buildings - Human impact safety requirements

Plumbers, Gasfitters and Drainlayers Act 2006

Documents listed above and cited in the clauses that follow are part of this specification. However, this specification takes precedence in the event of it being at variance with the cited document.

Requirements

1.2 QUALIFICATIONS

Plumbers to be experienced competent workers, familiar with the materials and the techniques specified. Carry out all work under the direct supervision of a Certifying Plumber under the Plumbers, Gasfitters and Drainlayers Act 2006.

2 PRODUCTS

2.1 SANITARY FIXTURES

Refer to SELECTIONS for product selection.

2.2 TAPWARE

Refer to SELECTIONS for product selection.

2.3 SANITARY ACCESSORIES

Refer to SELECTIONS for product selection.

2.4 ELECTRICAL SANITARY ACCESSORIES

Refer to SELECTIONS for product selection.

3 EXECUTION

Conditions - sanitary fixtures

3.1 DELIVERY

Only deliver to the site fixtures or fittings that can be immediately unloaded into suitable storage or be placed for direct installation.

3.2 STORAGE AND HANDLING

Take delivery of and store components complete with protective casings and coverings in areas that are enclosed, clean and dry and where no work is being done. Remove protection only to the extent that will allow installation.

3.3 QUALITY STANDARDS INCLUDING AS/NZS 3500.2

Installation work to comply with NZBC G1/AS1, NZBC G12/AS1, AS/NZS 3500.2: 2018, as modified by NZBC G13/AS3, and the fixture manufacturer's requirements.

ABA20220988
APPROVED - Site Copy
Hastings District Council
20/09/2022

3.4 SUBSTRATE

Ensure substrate and fixings will allow work of the specified standard.

3.5 CO-ORDINATION

Do not proceed if the points of supply and drainage services do not match the points of the fixtures without force or distortion.

3.6 INSTALLATION REQUIREMENTS INCLUDING AS/NZS 3500.2: 2018

Install to NZBC G1/AS1, NZBC G12/AS1, NZBC E3/AS1, AS/NZS 3500.2: 2018, as modified by NZBC G13/AS3, and to the fixture manufacturer's installation requirements for each component. Carry out preparatory and assembly work, including connections to supply and drainage services and the application of slurries and sealants in sequence.
Seal between all sanitary fixtures and floors, wall linings, fixtures and the tops they are in, the tops and wall linings, to NZBC E3/AS1. Fixtures include toilets, baths, basins, tubs or sinks. Tops include, vanities, bath surrounds, sink benches, etc, and there upstands.

3.7 PROVIDE SUPPORT

Confirm fixing points needed for each unit and provide solid blocking at each fixing bracket location.

Conditions - tapware

3.8 RETAIN

Retain tapware in the manufacturer's original packaging and ensure that units are complete with fixings and installation instructions. Label each unit separately with its fitting name and space number.

3.9 STORE

Store tapware packages in a shelved, dry and securely locked area. Provide supervision when the secure area is unlocked and packages and cartons are being distributed; signing off each package from the schedule as released.

Conditions - sanitary accessories

3.10 RETAIN

Retain fixtures, fittings and hardware in the manufacturer's original packaging and ensure that units are complete with associated fixings and installation instructions. Label each unit separately to match the submitted and approved schedule.

3.11 PACKAGE

Package fixtures, fittings and hardware units required in clear plastic and label each to match the drawings and the submitted schedule. Place packages in cartons selected for 'level', 'location', and/or 'sector' and label the packages and the cartons similarly.

3.12 STORE

Store items in a shelved, dry and securely locked area. Provide supervision when the secure area is unlocked and packages and cartons are being distributed; signing off each package from the schedule as released.

3.13 INSPECTION

Before starting the installation of proprietary items, check relevant spaces and wall and floor finishes for any condition that would not allow the proper installation of any unit. Do not proceed until such conditions have been remedied.

Installation - sanitary fixtures

3.14 INSTALLING TOILET PAN

Carry out preparatory and assembly work, including connections to supply and drainage services and the application of slurries/bedding and sealants in sequence. Fit the toilet pan in position, plumb, level, flush and rigid without stressing the attachment points of the component. Fixings to be corrosive resistant. Fit seat.

3.15 INSTALLING CISTERNS

Fit firmly in place and connect the specified cisterns from the supply services through the flush pipes to the relative fixtures in the positions as detailed all plumb and level.

ABA20220988
APPROVED - Site Copy
Hastings District Council
20/09/2022

Installation - Basins

3.16 INSTALLING WASHBASINS

Install to NZBC G1/AS1. Set basins firmly to walls or vanities as detailed and to comply with NZBC E3/AS1. Connect to supply and drains through trap to the drainage system.

3.17 INSTALLING VANITIES - INTEGRAL BASINS

Install in accordance with the manufacturer's requirements. Connect to supply and drains through trap to the drainage system. Seal top and upstand to wall surface to comply with NZBC E3/AS1.

Installation - Showers

3.18 INSTALLING SHOWER FITTINGS

Shower waste, mixer and rose to be install to NZBC G1/AS1.

3.19 INSTALLING SHOWER DOOR AND SCREEN

To NZS 4223.3 and to the product manufacturer's requirements. Set units level, plumb and true to line and required location, with moving parts and actions freely and easily operating.

Installation - Baths

3.20 INSTALLING BATHS

Install to NZBC G1/AS1. Set firmly in cradle with required points fully supported, level and flush. Connect to supply and drainage services.

Installation - Sinks

3.21 INSTALLING SINK BENCHES

Install in accordance with manufacturer's/supplier's requirements. Connect to supply and drainage services.

3.22 INSTALLING CLEANERS SINKS AND TUB UNITS

Install in accordance with manufacturer's requirements. Connect to supply and drainage services.

Installation - Miscellaneous

3.23 INSTALLING STAINLESS STEEL FIXTURES

Carry out preparatory work and fit elements in position plumb, level, flush and rigid without stressing the attachment points in sequence. Connect to supply and drainage services.

Application - tapware

3.24 GENERAL

In accordance with the manufacturer's requirements. Maintain safe water temperatures to comply with NZBC G12/AS1.

Application - sanitary accessories

3.25 INSTALLING ACCESSORIES

Fit specified fittings firmly in place at required dimensions relative to floor and adjoining sanitaryware fittings, all plumb and level.

3.26 LOCATE

Locate units at heights and/or locations shown on the drawings, or as required to comply with NZBC G1/AS1. For any dimension not shown or known, request direction before proceeding.

3.27 CUTTING AND FITTING

Where cutting and fitting of the substrate is necessary for installing any unit, carry out this work before the painting or finishing of that surface. Remove any hardware when required for painting, placing it in the packaging or carton originally supplied and returning it to the secure store until ready for re-installation.

ABA20220988
APPROVED - Site Copy
Hastings District Council
20/09/2022

3.28 INSTALLING UNITS

Install each unit in accordance with the proprietary fixture manufacturer's requirements, using the templates and tools supplied or recommended by them. Set units level, plumb and true to line and required location, with moving parts and actions freely and easily operating. Do not make any modifications to supplied units.

Completion

3.29 REPLACE

Replace damaged or marked elements.

3.30 PROTECTIVE COVERINGS

Leave fixtures, fittings and accessories clean and unblemished with stickers and protective coverings removed, with supply and drainage connections and all parts fully operating and working. Leave the whole of this work free of blemishes, undamaged and to the standard of finish required for following work.

3.31 REMOVE

Remove debris, unused materials and elements from the site.

4 SELECTIONS

4.1 SANITARY FIXTURES AND ACCESSORIES

Owner selected, confirm prior to ordering

4.2 ELECTRICAL SANITARY ACCESSORIES

Location:	Bath, Ensuite
Heated towel rail:	Goldair (or similar)
Finish:	Chrome

ABA20220988
APPROVED - Site Copy
Hastings District Council
20/09/2022

7411C CONTINUOUS SPOUTING RAINWATER SYSTEMS

1 GENERAL

This section relates to **Continuous Group** fascia and rainwater disposal systems. It includes:

- Continuous Group Metal Fascia system
- Continuous Group Metal Spouting system

1.1 ABBREVIATIONS

The following abbreviations are used throughout this part of the specification:

BMT	Base metal thickness
NZMRM	New Zealand Metal Roofing Manufacturers Inc.

Documents

1.2 DOCUMENTS

The following documents are specifically referred to in this section:

NZBC E1/AS1	Surface water
NZBC E2/AS1	External moisture
NZMRM CoP	NZ Metal Roof and Wall Cladding Code of Practice

Documents listed above and cited in the clauses that follow are part of this specification. However this specification takes precedence in the event of it being at variance with the cited document.

1.3 MANUFACTURER/SUPPLIER DOCUMENTS

Manufacturer and supplier documents relating to this part of the work:
Continuous Group Fascia, Spouting and Downpipe Systems.

Copies of the above literature are available from www.continuous.co.nz or by contacting **Continuous Group**:

Web:	www.continuous.co.nz
Email:	cg@continuous.co.nz
Telephone:	0800 50 1993

Branch Contact	**E-mail**
Hawkes Bay	hawkes_bay@continuous.co.nz

Warranties

1.4 WARRANTY - MANUFACTURER/SUPPLIER

Provide material manufacturer/supplier warranty for the following materials:

ColorCote® MagnaFlow™ or Colorsteel Maxx®

10 years:	For failure of paint coating adhesion (manufacturer's standard warranty)
10 years:	For weatherproofing failure caused by material penetration as a result of corrosion (manufacturer's standard warranty)

- Provide this warranty on the manufacturer/supplier standard form.
- Commence the warranty from the date of completion of the installation.

Refer to Continuous Group for comprehensive warranty terms, conditions and environmental considerations based on performance requirements and the correct material selection according to NZS 3604.

ABA20220988
APPROVED - Site Copy
Hastings District Council
20/09/2022

1.5 WARRANTY - INSTALLER/APPLICATOR

Provide an installer/applicator warranty:

5 years:	Weatherproofing failure caused by substandard workmanship and/or sealants.

- Provide this warranty on the installer/applicator standard form
- Commence the warranty from the date of completion of the installation.

Requirements

1.6 NO SUBSTITUTIONS

Substitutions are not permitted to any of the specified systems, components and associated products listed in this section.

1.7 MATERIAL SELECTION

Fascia, spouting and downpipes are categorised as a “Sheltered environment”. Ensure correct materials are selected according to exposure zones detailed under NZS 3604.

1.8 QUALIFICATIONS WORKERS – MANUFACTURER / SUPPLIER REQUIREMENTS

Continuous Group installers and local agents to be experienced competent trades people, familiar with the materials and the techniques specified.

Performance

1.9 TEST

Test the completed rainwater disposal system with water to ensure gutters are laid to correct falls, that both spouting and downpipes are unobstructed, and that no ponding occurs. Comply with the requirements of NZBC E1/AS1.

1.10 DESIGN - NZBC E1/AS1

Layout, falls and capacity of spouting to falls and the size and position of downpipes to comply with NZBC E1/AS1. Refer to NZMRM CoP recommendations.

2 PRODUCTS

Materials

2.1 PRE-PAINTED STEEL

ColorCote® MagnaFlow™, pre-painted G300 steel with a minimum alloy/zinc coating of 200 gsm/m².

Products

2.2 FASCIA

Manufactured by Continuous Group. Complete with truss fixed brackets, fastenings and pre-formed or hand-cut corner soakers.
Refer to NZMRM CoP flashing recommendations. Refer to SELECTIONS for type.

2.3 CONTINUOUS SPOUTING

Manufactured by Continuous Group using onsite plant to provide made to measure continuous lengths of spouting. Complete with matching brackets and fasteners. Spouting to be sized to comply with NZBC E1/AS1 and NZBC E2/AS1.
Refer to NZMRM CoP recommendations. Refer to SELECTIONS for type.

2.4 SPOUTING

Manufactured and supplied by Continuous Group. Complete with matching brackets and fasteners. Spouting to be sized to comply with NZBC E1/AS1 and installed to NZBC E2/AS1. Refer to NZMRM CoP recommendations. Refer to SELECTIONS for type.

2.5 DOWNPIPES

PVC-U, complete with matching brackets and fasteners. Downpipes to be sized to comply with NZBC E1/AS1 and installed to NZBC E2/AS1. Refer to NZMRM CoP recommendations.

ABA20220988
APPROVED - Site Copy
Hastings District Council
20/09/2022

Components

2.6 SPOUTING DROPPERS

Aluminium or PVC-U droppers for pre-painted steel or pre-painted aluminium spouting. All droppers to be sized to fit inside the downpipe.

2.7 DOWNPIPE OFFSETS

Diecast aluminium (male/female) bends and tees for pre-painted steel or pre-painted aluminium downpipes. Mitered soldered or sealed bends and tees for copper spouting. All offsets (bends or tees) to have a minimum fall of 5°.

2.8 BRACKETS - SPOUTING

Manufactured from aluminium to comply with NZBC E2/AS1, requirements for exposure zones B,C,D & E “Sheltered environment” and NZS 3604.

2.9 SEALANT

Selleys backing sealant (Sil-X advanced polymer) or premium grade neutral cure silicone.

3 EXECUTION

Conditions

3.1 DELIVERY, STORAGE & HANDLING OF PRODUCTS

Refer to 1270 CONSTRUCTION for requirements relating to delivery, storage and handling of products.
Handle and store all fascia and rainwater products to avoid damage. Store on site under cover, on a clean level area, stacked to eliminate movement and away from work in progress. Avoid exposure to sunlight if strippable film is still on the product.

3.2 SUBSTRATE

Check that the substrate is level and true to line and face, and will allow work of the required standard without distortion to the product alignment. Do not proceed until they are up to standard.

3.3 THERMAL MOVEMENT

Make adequate provision in the fixing and jointing of the fascia and rainwater system for thermal movement in the lengths of the products. Refer to NZMRM CoP recommendations.

3.4 ELECTROLYTIC CORROSION

Keep all metals which are subject to electrolytic action separate from each other, and from treated timber, concrete and other lime-based substances by space, painting of surfaces, taping, or separator strips.

Check compatibility of metals used for fasteners, fascia and rainwater goods, against the materials they will be in contact with. Refer to NZBC E2/AS1.

Installation - general

3.5 INSTALLATION GENERALLY

Install to NZMRM CoP recommendations where not otherwise specified.

Installation - fascia

3.6 INSTALL FASCIA

Install fascia brackets to every rafter end or at maximum spacing of 900mm, and within 200mm of all corners. Assemble and fit fascia to brackets. Cut and form corners, or use pre-formed soakers. Rivet all joints.
Refer to NZMRM CoP flashing recommendations.

Installation - spouting

ABA20220988
APPROVED - Site Copy
Hastings District Council
20/09/2022

3.7 INSTALL SPOUTING BRACKETS

Screw-fix spouting brackets vertically to allow for a Continuous Emergency Overflow System. Brackets for external gutters to be located within 300 mm of all stop-ends, corners and rainwater heads. Maximum bracket spacing 750 mm for gutters < 175 mm wide, and 600 mm for gutters 175 – 300mm wide. In snow load areas, brackets to be fixed at maximum spacing of 600 mm. Brackets should be installed to provide a recommended 1:500 fall of spouting towards the outlets, to prevent ponding. Screw-fix brackets true-to-line.
All installation to NZMRM CoP recommendations.

3.8 INSTALL SPOUTING

Assemble and fit spouting to brackets. Cut out and form corners, stop-ends and dropper holes neatly and fit, rivet and seal around all joints. Leave a rear emergency overflow gap of minimum of 2 mm as per NZMRM CoP and to comply with NZBC E1/AS1.
All installation to NZMRM CoP recommendations.

3.9 INSTALL DOWNPIPES

Form downpipes complete with offsets as needed, with all joints lapped and sealed as required. Screw fix with matching pipe brackets to rigidly stand plumb to the wall, and discharging into the stormwater gully or pipe inlet. All installation to NZMRM CoP recommendations.

4 SELECTIONS

For further details on selections go to www.continuous.co.nz.
Substitutions are not permitted to the following, unless stated otherwise.

Products

4.1 CONTINUOUS GROUP - RESIDENTIAL SERIES SPOUTING

Manufacturer:	Continuous Group
Profile/size:	QUARTZ - 135 mm Quarter Round spouting
Base material:	Colorcote® MagnaFlow™ (BMT 0.55 mm)
Brackets:	External

ABA20220988
APPROVED - Site Copy
Hastings District Council
20/09/2022

7420 SANITARY SYSTEMS

1 GENERAL

This section relates to above ground gravity flow sanitary systems;

- for foul water
- from sanitary fixtures to first underground drain connection
- including system wastes, floor wastes, floor waste gullies, traps, vents and valves
- with associated components and accessories to make the system work

1.1 DOCUMENTS

Documents referred to in this section are:

NZBC G1/AS1	Personal hygiene
NZBC G13/AS3	Foul water - Sanitary plumbing and drainage

AS/NZS 3500.2: 2018 Plumbing and drainage - Sanitary plumbing and drainage
Plumbers, Gasfitters and Drainlayers Act 2006

1.2 QUALIFICATIONS

Carry out all work under the direct supervision of a certifying plumber under the Plumbers, Gasfitters and Drainlayers Act 2006.

2 PRODUCTS

2.1 PVC-U WASTE, DISCHARGE AND VENT PIPES

PVC-U pipe complete with fittings brand-matched to the pipe manufacturer's requirements.

3 EXECUTION

3.1 EXECUTION GENERALLY - AS/NZS 3500.2

Carry out this work to AS/NZS 3500.2: 2018, as modified by NZBC G13/AS3, and complete all tests.

3.2 ELECTROLYTIC ACTION

Avoid electrolytic action by eliminating actual contact or continuity of water between dissimilar metals.

3.3 INSTALL TRAPS, WASTE AND VENT PIPES - AS/NZS 3500.2: 2018

Connect waste outlets to traps and run waste pipes and back vents concealed, sized and fixed to AS/NZS 3500.2: 2018, as modified by NZBC G13/AS3. Discharge wastes into the drainage system stack, soil pipe, or gully trap as shown. Bird proof mesh to all roof vents and vermin proof mesh to all untrapped waste pipes.

3.4 PENETRATIONS

At penetrations through constructions provide and fit collars and escutcheon plates to match pipework.

3.5 TEST

Confirm timing before carrying out any tests. Supply potable water and apparatus needed. Test to AS/NZS 3500.2: 2018. Carry out and record a visual inspection that each joint showed no evidence of leaks.

3.6 CLEAN UP

Remove labels and clean fittings. Remove unused materials from the site.

4 SELECTIONS

4.1 PVC-U WASTE, DISCHARGE AND VENT PIPES

General selection of fittings and components by plumber/drainlayer.

ABA20220988
APPROVED - Site Copy
Hastings District Council
20/09/2022

7430 DRAINAGE

1 GENERAL

This section relates to the supply and laying of gravity foul water (sewage), stormwater and groundwater drainage.

1.1 DOCUMENTS REFERRED TO

Documents referred to in this section are:

NZBC B1/AS1	Structure
NZBC E1/AS1	Surface water
NZBC G13/AS3	Foul water - sanitary plumbing and drainage

AS/NZS 3500.2: 2018 Plumbing and drainage - sanitary plumbing and drainage
Plumbers, Gasfitters and Drainlayers Act 2006

1.2 AS BUILT DOCUMENTS

Supply a 1:100 scale as-built drawing of drains and fittings to the territorial authority and to the owner on completion.

1.3 QUALIFICATIONS

Drainlayers to be experienced, competent and familiar with the materials and techniques specified. Carry out all work under the direct supervision of a certifying drainlayer under the Plumbers, Gasfitters and Drainlayers Act 2006.

2 PRODUCTS

2.1 CONCRETE

17.5 MPa prescribed mix.

2.2 REINFORCEMENT

Plain round and/or deformed steel bars, Grade 300.

2.3 PVC-U PIPES

PVC-U pipes bends, junctions, fittings and joints .
Underground PVC-U pipe to be classified as follows:

Classification:	Use:
SN4 - SN6	Domestic & light load areas

2.4 POLYETHYLENE PIPES

Polyethylene pipes and fittings.

2.5 GULLY TRAPS - AS/NZS 3500.2: 2018

Gully traps complete with grating to AS/NZS 3500.2: 2018, 4.6 Gullies, as modified by NZBC G13/AS3.

2.6 SURFACE WATER SUMP GRATINGS

Cast iron frame with lift-up grating.

2.7 INSPECTION COVERS

Cast iron frame with screw-down cover.

2.8 TRENCH BACKFILLING MATERIAL, FOUL WATER - AS/NZS 3500.2: 2018

Bedding and backfilling material to AS/NZS 3500.2: 2018.

3 EXECUTION

Surface water

ABA20220988
APPROVED - Site Copy
Hastings District Council
20/09/2022

3.1 EXCAVATE

Excavate for drains to a firm even base with correct gradients set in straight runs.
Trenches running parallel, below and close to foundations of buildings to NZS 3604 to be separated to:

- NZBC E1/AS1, for stormwater and subsoil drains.
- NZBC G13/AS2, for foul water drains.

3.2 MANUFACTURER'S REQUIREMENTS

All drainage installations to the pipe and fitting manufacturer's requirements.

3.3 FOUL WATER DRAINAGE GENERALLY - AS/NZS 3500.2: 2018

Carry out this work to AS/NZS 3500.2: 2018 and complete all tests.
Lay uPVC pipe systems and lay polyethylene pipes and fittings.

3.4 SURFACE WATER DRAINAGE GENERALLY - E1/AS1

Carry out stormwater drainage work to NZBC E1/AS1, and complete all tests to NZBC E1/VM1.
Lay uPVC pipe systems and lay polyethylene pipes and fittings.

3.5 LAY FOUL WATER DRAINS

Lay drains in straight runs to correct gradients, to discharge into the network utility operator's sewer. Set inspection fittings on a concrete base.

3.6 CONSTRUCT GULLY TRAPS - AS/NZS 3500.2: 2018

Set in a minimum 100mm thick concrete with top surround 25mm above paving and 75mm above other surfaces, to AS/NZS 3500.2: 2018s.

3.7 LAY STORMWATER DRAINS

Confirm the required location of downpipes and finished ground levels before commencing pipework. Set downpipe bends in concrete with the concrete brought up to protect the top of the bend from damage. Lay drains in straight runs to correct gradients to discharge into the network utility operator's stormwater system.

3.8 INSTALL STORMWATER INSPECTION CHAMBERS

Construct as detailed on a poured concrete footing to NZBC E1/AS1. Provide all necessary haunching to channels. Fit a cast iron cover and frame.

3.9 INSTALL FOUL WATER INSPECTION CHAMBERS - AS/NZS 3500.2: 2018

Construct as detailed on a poured concrete footing to AS/NZS 3500.2: 2018, as modified by NZBC G13/AS3. Provide all necessary haunching to channels. Fit a cast iron cover and frame.

3.10 CONCRETE ENCASEMENT

Concrete encase shallow drains and drains under driveways, on a 100mm deep 17.5 MPa concrete bed reinforced with three 10mm mild steel bars. Surround pipes with a polythene membrane to allow movement and encase in 100mm 17.5 MPa concrete.

3.11 TESTING - FOUL WATER

Confirm timing before carrying out any tests. Supply potable water and apparatus needed.
Test to AS/NZS 3500.2: 2018. Carry out and record a visual inspection that each joint showed no evidence of leaks.

3.12 TESTING - SURFACE WATER

Confirm timing before carrying out any tests. Supply potable water and apparatus needed.
Test to NZBC E1/VM1. Carry out and record a visual inspection that each joint showed no evidence of leaks.

3.13 TRENCH BACKFILLING MATERIAL, SURFACE WATER - NZBC E1/AS1

Bedding and backfilling material to NZBC E1/AS1.

4 SELECTIONS

ABA20220988
APPROVED - Site Copy
Hastings District Council
20/09/2022

4.1 TRENCH BACKFILLING GENERALLY - FOUL WATER

Granular bedding and selected fill shall be placed in layers no greater than 100 mm loose thickness and compacted. Base bedding (beneath the pipe) shall be placed and compacted before pipes are laid. Up to 300mm above the pipe, compaction shall be by tamping by hand tool over the entire surface of each layer to produce a compact layer without obvious voids, without disturbing or distorting the drain. Run marker tape along line of the pipe on top of the bedding.

Up to 300mm above the pipe, compaction shall be by tamping by hand using a rod with a pad foot (having an area of 75 ± 25 mm by 75 ± 25 mm) over the entire surface of each layer to produce a compact layer without obvious voids, without disturbing the drains.

More than 300 mm above the pipe, compaction shall be by at least four passes of a mechanical tamping foot compactor (whacker type) with a minimum weight of 75 kg. For plastic based pipes, ensure care taken to avoid impact loading of the pipe.

4.2 TRENCH BACKFILLING GENERALLY - SURFACE WATER - NZBC E1/AS1

Granular bedding and selected fill shall be placed in layers no greater than 100 mm loose thickness and compacted. Base bedding (beneath the pipe) shall be placed and compacted before pipes are laid. Up to 300mm above the pipe, compaction shall be by tamping by hand tool over the entire surface of each layer to produce a compact layer without obvious voids, without disturbing or distorting the drain. Run marker tape along line of the pipe on top of the bedding.

More than 300 mm above the pipe, compaction shall be by at least four passes of a mechanical tamping foot compactor (whacker type) with a minimum weight of 75 kg. For plastic based pipes, ensure care taken to avoid impact loading of the pipe.

4.3 FOUL WATER TRENCH BACKFILLING - AS/NZS 3500.2: 2018

Carry out foul water trench backfilling to AS/NZS 3500.2: 2018, as modified by NZBC G13/AS3.
PVC-U pipe and polyethylene pipes.

4.4 SURFACE WATER TRENCH BACKFILLING - NZBC E1/AS1

Carry out surface water trench backfilling to NZBC E1.
PVC-U pipe and polyethylene pipes.

4.5 INSTALL SURFACE WATER SUMP

To NZBC E1/AS1, complete with ceramic half-siphon pipe and cast iron frame with a lift out grating.

4.6 PVC-U PIPES AND ACCESSORIES

General selection of fittings and components by plumber/drainlayer.

ABA20220988
APPROVED - Site Copy
Hastings District Council
20/09/2022

7701 ELECTRICAL BASIC

1 GENERAL

This section relates to the wiring for domestic and small scale commercial installations, including:

- power
- lighting
- electrical automation
- security system
- complete with componentry
- electrically-powered fittings
- fire rated sealers, liners and accessories

1.1 ABBREVIATIONS AND DEFINITIONS

The following abbreviations apply specifically to this section:

CFL	compact fluorescent lamp
ELV	extra low voltage
GLS	general lighting service
IP	international (ingress) protection classification
LCD	liquid crystal display
LED	light emitting diode
MCB	miniature circuit breaker
NUO	Network Utility Operator
PCB	printed circuit board
PIR	passive infrared
RCBO	residual current-operated circuit breaker with over current protection
RCCB	residual current-operated circuit breakers
RCD	residual current device
SIA	security integration architecture
TPS	tough plastic sheathed

Documents

1.2 DOCUMENTS

The following documents are specifically referred to in this section:

NZBC E2/AS1	External moisture
NZBC F7/AS1	Warning systems
NZBC G4/AS1	Ventilation
NZBC G9/VM1	Electricity

Electricity (Safety) Regulations 2010 (Reprint as at 21 January 2019).
TCF Premises Wiring Cable Installers Guidelines for Telecommunication Services

Documents listed above and cited in the clauses that follow are part of this specification. However, this specification takes precedence in the event of it being at variance with the cited document.

Warranties

1.3 WARRANTY

Warrant the complete electrical installation under normal environmental and use conditions against failure of materials and execution.

1 year:	Warranty period

Requirements

1.4 COMPLY

Comply with the Electricity (Safety) Regulations 2010 and TCF Premises Wiring Cable Installers Guidelines for Telecommunication Services for listed and prescribed work and with the utility network operator's requirements. Apply for the service connection. Arrange for the required inspections of listed work. Pay all fees.

ABA20220988
APPROVED - Site Copy
Hastings District Council
20/09/2022

1.5 QUALIFICATIONS GENERALLY

Refer to 1270 CONSTRUCTION for requirements relating to qualifications.

1.6 QUALIFICATIONS WORKERS – LICENSED UNDER STATUTE

Workers and supervisors to be appropriately qualified to applicable legislative requirements. Refer to 1270 CONSTRUCTION for additional requirements relating to qualifications.

1.7 QUALIFICATIONS - SECURITY SYSTEM

Installation by an installer licensed under the Private Investigators and Security Guards Act. Installation of all security equipment to comply.

1.8 ELECTRICAL CERTIFICATE OF COMPLIANCE

Supply a certificate of compliance (CoC) to the owner, and if required the NUO, as required by the Electricity (Safety) Regulations 2010, prior to connection.

- Arrange for the NUO to inspect before the meter installation, listed work inspection, polarity check and supply becoming live.
- Arrange for an inspector to inspect high risk electrical work as required by regulation 70.

1.9 ELECTRICAL SAFETY CERTIFICATE

Provide an Electrical Safety Certificate (ESC), as required by the Electricity (Safety) Regulations 2010, Reg 74A, to the owner and when required the BCA. To be provided no later than 20 working days after connection and prior to Practical Completion.

2 PRODUCTS

2.1 MAINS SUPPLY

Tough plastic sheathed neutral screened cable with a minimum rating of 60 amps per phase. Include pilot cable where required by network utility company.

2.2 CABLES

Tough plastic sheathed copper conductors stranded above 1.0mm². Minimum sizes as below. Increase sizes if the method of installation, thermal insulation, cable length or load will reduce the cable rating below that of the MCB rating, or produce an excessive voltage drop.

Lighting circuits:	Domestic: 1.5mm² on 10 amp MCBs
Power circuits:	2.5mm² on 16 amp MCBs for domestic and unenclosed or unfilled cavity construction
	2.5mm² on 16 amp MCBs for domestic insulated construction, or filled cavity
	2.5mm² on 20 amp MCBs for unenclosed or unfilled cavity construction
	2.5mm² on 16 amp MCBs for insulated construction, or filled cavity, or lengths over 30 metres
Hot water cylinder circuits:	Single phase: 2.5mm² on 20 amp MCBs
Range/oven/hob circuits:	Single phase: 6mm² on 32 amp MCBs

Heat resistant cable for final connections to all heated appliances, and high temperature cable in ambient conditions that may be above 35°C.

2.3 METER BOX

Proprietary manufactured, zinc plated powder coated metal case, or ABS plastic, with glazed panel door, weatherproof where mounted outdoors, and complete with meter mounting, main switch and fuse.

2.4 DISTRIBUTION BOARD

Flush surface mount boards installed in accordance. Manufactured from engineering grade resin with a glow wire rating of 850°C, complete with neutral and earth busbars, and insulated comb phase bar. Distribution boards to have 20% spare capacity for future additions and alterations.

2.5 CIRCUIT PROTECTION

General requirements including main switch 63A or 100A. Residual current protection 30mA, ensure RCCBs' comply. MCBs to 4.5kA or 6kA rated.

ABA20220988
APPROVED - Site Copy
Hastings District Council
20/09/2022

2.6 WALL BOXES

Standard grid size or equivalent to be manufactured from plastic or metal, with 2 or more gang size to be metal with steel inserts for accessory securing screws. Screw fixed.

2.7 SWITCH UNITS

Single pole switches to be 16 amp minimum rated, double pole or intermediate to be 16 amp minimum rated. All switches to be 230 volt a.c. polycarbonate flushplate units. Refer to drawings/schedules for number of switches per unit, dimmer units, neon (indicator or toggle) units and 2 way units.

2.8 HOT WATER SYSTEM SWITCH

One way 20 amp switch complete with cable clamp for flexible PVC conduit to element enclosure.

2.9 SWITCHED SOCKET UNITS

10 amp, 230 volt flat 3 pin socket outlets fitted with safety shutters single or multi gang.

2.10 SMOKE ALARMS

Type 1 domestic smoke alarm to NZBC F7/AS1. A wired 230 volt ionised smoke detector type.

2.11 SURGE PROTECTION

Protection for the homes appliances with IEC 61643 Class ll surge protection devices fitted to the switchboard. For variable electronic equipment fit IEC 61643 Class lll surge protection to switched socket outlets.

2.12 DOOR BELL SYSTEM

Complete with transformer for mounting on distribution board.

2.13 LIGHT FITTINGS

Fluorescent and High Intensity Discharge fittings with low loss control gear and power factor corrected to 0.95 minimum. Control gear suitable for dimming if this is required. All fittings complete with lamps; Incandescent GLS lamps pearl, coiled-coil 230v rated, bayonet cap; Fluorescent triphosphor 2700K; CFL; halogen ELV 12v dichroic reflector with cover glass unless detailed otherwise; integral/non-integral LEDs, reflectors, lenses, heatsinks and drivers - 3,000K to 4,000K, CRI >80, L70.

2.14 EXHAUST FANS

Ceiling, wall or duct mounted exhaust fans for ventilation to NZBC G4/AS1.

2.15 HEATED TOWEL RAILS

Fixed wired heated towel warmers, double insulated, IPX4 splash-proof, scratch resistant powdercoated or chrome finish.

2.16 EXTERIOR SWITCHES AND SWITCHED SOCKET UNITS

Using materials with superior UV protection, impact strength, and addition chemical resistance when compared with interior polycarbonate fittings. Weather protected, switches and sockets to IP56 minimum. Sockets fitted with safety shutters behind socket pins, and all products able to be padlocked off or on.

Security system

2.17 CONTROL PANEL

Control panel system with a minimum of one installer code, one master code, 6 zones minimum and 6 user codes. The installer to select codes to suit installation.

2.18 DETECTORS

There are two main types of detectors:

- Standard passive infrared sensors: Install in stable environments with no wind flow and no direct bright sunlight.
- Passive infrared/ microwave sensors: Install in area where environmental stability is an issue.

ABA20220988
APPROVED - Site Copy
Hastings District Council
20/09/2022

2.19 AUDIBLE DEVICES

Internal sirens can be either a 12V Piezo Siren or a Horn speaker with a sound pressure level of no less than 95dB.
External siren can be either a stainless steel design or have hardened plastic casing. Both designs to be fully weatherproof but not limited to IP66 Rating. The siren box to contain a strobe diffuser in either blue or red. The siren shall contain a horn speaker, 12v speaker or an electronic siren. The external siren box to have both a cover and rear wall tamper mechanism.

2.20 CABLING

Security alarm wiring to comply.
Security alarm wiring to be multi stranded and not single stranded, minimum 0.5mm².

2.21 PERIPHERALS

Fit anti-tamper devices to detectors, control panels and equipment housings, programmed to give a tamper indication when the system is unset and a tamper alarm when the system is set.
Standard keypad manufactured of moulded hardened plastic with either a LED or LCD screen, to match the style of the wiring accessories in diameter, colour and aesthetics.

3 EXECUTION

3.1 MAIN SUPPLY

Lay underground mains to the NUO requirements. Excavate trench, install cable and marker tape and backfill.

3.2 METER BOX

Fit to meter box manufacturer and Electricity Retailer requirements. Recess into external wall in sheltered area and flash to weatherproof to NZBC E2/AS1. Arrange for meter installation and connection.

3.3 DISTRIBUTION BOARD

Fit to board manufacturer requirements. Recess into wall or surface mount and ensure fire containment properties of the enclosure are maintained.

3.4 CIRCUIT PROTECTION

Install MCBs at distribution board to protect each final sub circuit.

3.5 MAIN EARTH

Provide a plastic toby box to contain and protect the earth electrode. Fix the connecting earth wiring closely and securely against wall surfaces.

3.6 EARTH LEAKAGE PROTECTION

Install RCD protection.

3.7 RCD - RESIDENTIAL INSTALLATIONS

Install 30mA RCD protection at the switchboard for all final sub circuits to control outlets and lighting except for fixed or stationary cooking equipment.

3.8 RCD - SPECIFIC INSTALLATIONS

Install fixed wired RCD protected outlets (SRCD) in the following higher risk areas:

- Wet areas: bathrooms, laundries, kitchens.
- Hand-held tools subject to movement in use, i.e. work-shops, garages.

3.9 SET-OUT

The position of outlets and equipment shown on drawings is indicative of requirements. Confirm documents and site conditions are not in conflict with other services or features. Resolve conflicts and discrepancies before proceeding with work affected. Confirm on site the exact location, disposition and mounting heights of all outlets, fittings, equipment, penetrations, and use of exposed wiring. Fix outlet items level, plumb and in line.

3.10 CABLING

Install wiring systems to comply. All cabling run concealed. No TPS cable laid directly in concrete. Locate holes in timber framing for the passage of cables at the centre line of the timber member. Install cable in conduits where required to pass through concrete or underground. In walls run cabling horizontally and vertically in straight lines. In ceilings either run cabling along ceiling framing or attached to catenary wires. Clip cabling to ceiling framing/catenary wires.

ABA20220988
APPROVED - Site Copy
Hastings District Council
20/09/2022

3.11 CABLING CIRCUITS

Install all circuits with the appropriately rated cable and circuit protection. Install with a maximum of 8 light switch units or 4 double or single switched socket units on any circuit. Minimum 2 lighting circuits per floor. Separate circuits for all electric heating appliances. Kitchen sockets to be on at least two different circuits.

3.12 WALL BOXES

Mount flush in cavity construction size to fit products selected. Fix vertically mounted wall boxes to studs. Screw fix horizontally mounted switched socket outlet wall boxes to solid blocking or nogs. Fix switch panel wall boxes to solid blocking.

3.13 ISOLATING SWITCHES

Locate isolating switches in positions as confirmed by the owner, when not specifically shown on the drawings.

3.14 LIGHT FITTINGS

Install light fittings in locations and at heights specified and confirmed by the owner, in accordance with the fitting manufacturer requirements.

3.15 EXTRA LOW VOLTAGE LIGHTING

Use electronic, transformers (halogen) or drivers (LED) for ELV lamps, one transformer/driver per lamp. Locate to manufacturer requirements and as close as practicable to the lamp. Ensure transformers/drivers and rear of light fittings are adequately ventilated and appropriately clear of any building elements.

3.16 ELECTRIC HOT WATER SYSTEM

For storage heaters, wire as a separate circuit through a wall-mounted isolating switch, with the cable from switch to element encased in flexible PVC conduit, clamp fixed at each end. Hot water cylinders, thermostats and 3000 watt element supplied and fitted under the hot and cold water system section.

3.17 SMOKE ALARMS

Install Type 1 domestic smoke alarm system to NZBC F7/AS1 and to the alarm manufacturer requirements. Fit neatly and without damage to the surrounding finish.

3.18 SURGE PROTECTION

Install surge protection devices to manufacturer requirements and in accordance. When fitting IEC 61643 Class ll protection at the switchboard, protect the device by a dedicated MCB.

3.19 ELECTRIC POWERED FITTINGS AND EQUIPMENT

Install and wire fittings and equipment to individual fittings and equipment manufacturer requirements. Refer to the drawings for required layouts and locations for equipment. Refer to SELECTIONS for schedules of fittings.

3.20 BATHROOM ELECTRICAL FIXTURES

Install all electrical fixtures. Connect the following bathroom and toilet electrical items:

- Heated towel rails: Install to manufacturers requirements and installed in accordance
- Mirror demisters: Locate centrally above the wash hand basin(s). Connect wiring to room lighting unless specified otherwise.
- Exhaust fans: Install exhaust fans to manufacturer requirements. Installed in accordance, and NZBC G4/AS1.

ABA20220988
APPROVED - Site Copy
Hastings District Council
20/09/2022

3.21 OUTDOOR/EXTERIOR SERVICES

Install all wiring systems in accordance, and in accordance with the manufacturer recommendations:
Provide circuits and connections for exterior installations, including ELV 12/24 Volt path lighting and electronic irrigation systems. Refer to drawings for connection points. Where underground, ensure appropriate protection, such as thickness of sheathing, conduit, depth of cabling, and proximity to other services.

Use the appropriate rated fittings for power control and power supply. Weather protected switches and sockets to IP56. Install to manufacturer specifications using recommended fittings and sealants to maintain the products integrity.

Earth leakage protection to be provided for in areas where there is increased risk to human safety in the form of either RCDs at the distribution board, or socket outlet. RCDs are recommended for visible awareness of protection.

3.22 LABELLING

Include label under each controller, switch and circuit breaker on distribution boards. Include a warning notice if light dimmers are used in the installation. List the rating of each circuit.

Security system

3.23 SECURITY SYSTEM

Install to the system manufacturer requirements, control panel, detectors and associated equipment fitted neatly and without damage to surrounding finishes. Installation of security equipment to Intruder alarm systems - Client's premises - Design, installation, commissioning and maintenance. All 230v mains power connections to the security panel are to be in accordance. The 230V power is to be switched using a dedicated single gang Isolator switch or similar.

4 SELECTIONS

Materials

4.1 SELECTIONS - FITTINGS AND HARDWARE

Confirm selections of all outlet fittings and hardware with the owner in writing before ordering.



ABA20220988
APPROVED - Site Copy
Hastings District Council
20/09/2022

INITIA

GEOTECHNICAL SPECIALISTS

APPLECROFT LTD

562 IKANUI ROAD, FRIMLEY

GEOTECHNICAL COMPLETION REPORT

INITIA REF 1062 REV 0

MARCH 2022

ABA20220988
APPROVED - Site Copy
Hastings District Council
20/09/2022

Contents

1. Introduction 3
2. Background 4
   2.1 Site History 4
   2.2 Geotechnical Investigations and Reporting 4
3. Earthworks Testing 5
   3.1 General 5
   3.2 Site Observations 5
   3.3 Compaction Testing 5
4. Engineering Considerations 6
   4.1 General 6
   4.2 Overall Site Stability 6
   4.3 Seismicity and Liquefaction Potential 6
   4.4 Consolidation Settlement 6
   4.5 Expansive Soils 6
   4.6 Foundation Recommendations 7
   4.7 Services 7
   4.8 Hastings District Council Suitability Forms 7
   4.9 Unexpected Ground Conditions 7
   4.10 Recommendations 7
5. Applicability 8

Appendix A Figures 10

Appendix B Earthworks Testing Results 11

Appendix C Hastings District Forms 12

Appendix D Contractors PS3 13

Table 3-1 - Summary of laboratory tests on bulk samples 5
Table 4-1 - Revised peak ground accelerations and effective magnitude pairings from MBIE EQ Engineering Module 1 6

ABA20220988
APPROVED - Site Copy
Hastings District Council
20/09/2022

1. Introduction

Bulk earthworks have been undertaken to prepare the approximately 5.8 ha site for residential development at 562 Ikanui Road, Frimley, Hastings.

The development is to comprise 62 residential lots.

This report summarises the results of all the testing and monitoring associated with the bulk earthworks that have been undertaken to prepare the site for development of residential dwellings.

The scope of this report is limited to:

- Bulk earthworks for the residential lots; and
- Geotechnical recommendations for future dwelling design.

All civil engineering design and construction observations (roads, stormwater, service trenches, overland flow paths etc) have been carried out by others.

ABA20220988
APPROVED - Site Copy
Hastings District Council
20/09/2022

2. Background

2.1 Site History

Prior to the bulk earthworks the site was undeveloped and used as an apple orchard. The orchard trees were removed prior to earthworks commencing.

2.2 Geotechnical Investigations and Reporting

Geotechnical investigations and analyses were undertaken between March and May 2021 and comprised:

- 16 no. CPT to depths between 4.3 m and 15 m begl; and
- 20 no. Test Pits to depths between 3.8 and 4.5 m begl.

The results of the investigations, assessment of geohazards and earthworks recommendations were presented in Initia report ref. 1062 dated May 2021.

ABA20220988
APPROVED - Site Copy
Hastings District Council
20/09/2022

3. Earthworks Testing

3.1 General

Earthworks have been undertaken by Galbraith Earthmovers Ltd between September 2021 and January 2022. The earthworks have comprised reworking of the in situ silt and sandy silt to an engineered standard.

As built plans showing the depth of fill and finished ground levels are shown on plan ref 21030 DF01 and FL01 prepared by Civil Services (HB) Ltd). The following should be noted:

- The depth of fill ranges between 0.1 and 1.2 m; and
- The depth of fill includes topsoil placed. Generally, topsoil thicknesses range between 200 mm and 300 mm, however, over Lots 6 to 9 is about 400 – 500 mm.

3.2 Site Observations

Periodic site observations were undertaken by Geotechnical Engineers from Initia to ensure that earthworks were undertaken in general accordance with the requirements of NZS 4404:2010 and NZS 4431:1989.

Earthworks testing has been undertaken by Civil Services (HB) Ltd.

3.3 Compaction Testing

Compaction testing was undertaken under the direction of Initia. Testing was undertaken using a combination of:

- Nuclear densometer test NZS 4402:1986 Test 2.7.1; and
- Scala Penetrometer Tests

The specification adopted for the compaction testing was as follows:

- Fill to be placed to 95% of Maximum Dry Density; and
- Air voids to be on average less than 8%; and
- A target Scala blow count greater than 2 per 50 mm of penetration.

Laboratory tests on bulk samples of the fill are attached in Appendix B however are summarised in Table 3-1 below.

Table 3-1 - Summary of laboratory tests on bulk samples

Sample Id	Solid Density t/m^3 (tested)	Maximum Dry Density t/m^3	Optimum Water Content %	Natural Water Content %
Sandy Silt with some gravel	2.64	1.91	12.3	12.3
Sandy Silt	2.64	1.68	16.7	15.3

The results of compaction testing undertaken are attached in Appendix B and indicate that on average the specification above was achieved.

Scala penetrometer results where undertaken were on average 2 blows per 50 mm which indicates the subsoils have reasonable strength. The implications on future foundations are outlined in Section 4.6.

ABA20220988
APPROVED - Site Copy
Hastings District Council
20/09/2022

4. Engineering Considerations

4.1 General

Recommendations and opinions in this report are based on the data and observations at point locations. It must be appreciated that actual conditions could vary from the assumed model.

It is important that Initia be informed immediately if conditions vary from the assumed model.

4.2 Overall Site Stability

The site is flat and accordingly static stability is not considered to be an issue.

4.3 Seismicity and Liquefaction Potential

As outlined in Initia report 1062 dated May 2021, lenses within the site subsoils (below the engineered fill) are susceptible to liquefaction.

Since issue of Initia report ref 1062 dated May 2021, there has been a change in industry guidance. MBIE Earthquake Geotechnical Engineering Module 1 recommends the peak ground acceleration and effective Magnitude pairings as per Table 4-1 for use in analyses. The return periods for analyses (and assessment for future Building Consent applications) have been derived using the recommendations in NZS 1170.0:2002 on the assumption that future dwellings will be Importance Level 2.

Table 4-1 - Revised peak ground accelerations and effective magnitude pairings from MBIE EQ Engineering Module 1

Return Period	Peak ground acceleration, g	Effective Magnitude, Mw
1 in 25 years	0.12	6.4
1 in 500 years	0.58	7.1

We have reviewed our liquefaction analyses and confirm that the performance expectations are per the original analyses outlined in Initia report ref 1062 dated May 2021. Specifically, under 1 in 25 year return period levels of shaking, liquefaction is not expected to trigger. Under 1 in 500 year levels of shaking given the absence of free faces, the effects of liquefaction are likely to be limited to vertical settlement. Calculated index settlement is expected to be on average less than 100 mm, comparable with a TC2 type site in Christchurch. This risk can be mitigated through the use of specifically designed foundations. Further commentary is provided in Section 4.7.

4.4 Consolidation Settlement

Consolidation settlement is not expected to affect future developments providing limited further earthworks are carried out on the lots to facilitate dwelling construction. No fill (including topsoil) exceeding 300 mm depth should be placed without engineer approval due to the possibility of future settlement of the soft, loose natural underlying soils.

4.5 Expansive Soils

The site subsoils are not considered susceptible to soil expansivity given the material is of alluvial deposition and comprises sand and low to medium plasticity silts.

ABA20220988
APPROVED - Site Copy
Hastings District Council
20/09/2022

4.6 Foundation Recommendations

Based on the geohazards outlined above and the results of compaction testing carried out, we recommend structural raft type foundations (TC2 type Options 1 – 3 as outlined in MBIE[1] or similar) be constructed, bearing on the engineered fill. Bearing capacities suitable for use in design are as follows:

- Geotechnical Ultimate Capacity – 300 kPa;
- ULS bearing pressure – 150 kPa; and
- Allowable bearing pressure – 100 kPa.

Based on the bearing capacities above, total foundation settlement is not expected to exceed 25 mm, providing future earthworks are limited as per the recommendations in Section 4.6.

4.7 Services

Given the possibility for vertical deformations because of liquefaction under seismic loading, it is recommended that flexible materials and connections be adopted.

4.8 Hastings District Council Suitability Forms

Statements of Professional Opinion as to Compliance of the subdivision with the subdivision consent conditions for geotechnical works and the Statement of Professional Opinion as to the Suitability of Land for Building Development are presented in Appendix C.

4.9 Unexpected Ground Conditions

Our assessment is based on interpolation between site observations and periodic earthwork control visits by others. Local variations in ground conditions may occur leading to unfavourable ground conditions. It is important that we are contacted in this eventuality, or if any variation of subsoil conditions from those described in this report are found. Design assistance is available as required to accommodate any unforeseen ground conditions present.

4.10 Recommendations

The geotechnical investigations, earthworks testing has established that the 62 lots within the subdivision are suitable for development in accordance with the conclusions and recommendations outlined below.

1. We recommend that construction may proceed for all lots subject to the usual Building Consent Application process.
2. We recommend that structural raft type foundations are adopted for all future dwellings within the subdivision. All topsoil should be stripped from the building footprint prior to foundation construction.
3. Suitable bearing pressures for typical residential type structures are provided in Section 4.6. If higher values are required, a site-specific assessment will need to be carried out. During construction of the dwelling foundations, shallow testing (Scala penetrometer or similar) should be undertaken to ensure consistency with the values assumed in design. This will allow for a Producer Statement (PS4) – Construction Review to be submitted to HDC for the Code of Compliance Certificate.

[1] MBIE (2012) updated in May 2018– Repairing and rebuilding houses affected by the Canterbury earthquakes

ABA20220988
APPROVED - Site Copy
Hastings District Council
20/09/2022

5. Applicability

This report has been prepared for our client, Applecroft Ltd, with respect to the brief provided to us. The advice and recommendations presented in this report should not be applied to any other project or used in any other context without prior written approval from Initia Limited.

We note that only a representative sample of earthworks was reviewed by Initia and we are therefore relying on the Contractor's PS3 for compliance with the design. No liability is accepted for omissions represented by those documents. The Contractors PS3 is presented in Appendix D.

Report prepared by:



Nathan Hickman
Senior Geotechnical Engineer

Report reviewed by:



Andy Pomfret
Senior Geotechnical Engineer, Director

ABA20220988
APPROVED - Site Copy
Hastings District Council
20/09/2022

Document control record

Report Title		562 Ikanui Road, Frimley Geotechnical Completion Report			
Initia Project Reference		1062			
Client		Applecroft Ltd			
Revision	Date	Revision detail	Author	Reviewer	Approved by
0	March 2022	First Issue	N. Hickman	A. Pomfret	A. Pomfret
Current Revision		0			

ABA20220988
APPROVED - Site Copy
Hastings District Council
20/09/2022

Appendix A Figures

- Original ground levels
- As built Depth of Fill
- As built Finished Level Plan

ABA20220988
APPROVED - Site Copy
Hastings District Council
20/09/2022

803500mN
803600mN
803700mN
412400mE
803400mN
412500mE
803300mN
412600mE
412700mE
412800mE

HAWKES BAY EXPRESSWAY

901 OMAHU ROAD

LOT 63

EARTH NOISE BUND (NOT PART OF CONTRACT)

LOT 64

LOT 9
LOT 8
LOT 7
LOT 6
LOT 100
LOT 5
LOT 4
LOT 3
LOT 2
LOT 1
LOT 10
LOT 11
LOT 12
LOT 13
LOT 14
LOT 15
LOT 16
LOT 17
LOT 18
LOT 19
LOT 20
LOT 21
LOT 22
LOT 23
LOT 24
LOT 39
LOT 40
LOT 41
LOT 42
LOT 43
LOT 44
LOT 45
LOT 46
LOT 47
LOT 48
LOT 49
LOT 50
LOT 51
LOT 52
LOT 53
LOT 54
LOT 55
LOT 56
LOT 57
LOT 58
LOT 59
LOT 60
LOT 61
LOT 62
LOT 68
(road resevre)
LOT 69 (road reserve)
LOT 70
LOT 70 (road reserve)
LOT 25
LOT 26
27 OT 27
LOT 28
LOT 29
LOT 30
LOT 31
LOT 32
LOT 33
LOT 34
LOT 35
LOT 36
LOT 37
LOT 38

559
IKANUI ROAD

560 IKANUI ROAD

557 IKANUI ROAD

IKANUI ROAD

LEGEND

- 0.6 — Depth of Fill Contour
- Lot Boundary (Within subdivision)
- Boundary - Outside subdivision

NOTES

Contours are at 0.1m intervals

Positive figures indicate fill from original ground level to finished ground level

All property boundaries outside the subdivision were sourced from LINZ

All property boundaries within the subdivision were sourced August 2021 from Infir

No Depth Contours calculated for road reserve, pavement to be finished by others

ENGINEER: Infir Ltd
CONTRACTOR: Galbraith EarthMovers Ltd
SURVEYOR: Civil Services (HB) Ltd

SURVEY DATUM: NZ GEODETIC 2000, Hawkes Bay Circuit
HEIGHT DATUM: HB LOCAL AUTHORITY DATUM 1972 (MSL = 10.00m)
HEIGHT ORIGIN: AP 9 DP 414543, RL = 24.10m

Revision	Description	Date
A	For Approval	10/01/2022

Approval

Client

Galbraith EARTHMOVERS

CIVIL SERVICES (HB) LTD
Unit 9, 11 Wakefield Street
PO Box 5011, Napier, 4145
NEW ZEALAND
Phone +64 6 843 6996
Website: www.civilservices.co.nz

Drawn: BN
Designed:
Surveyed: Civil Services HB Ltd
Project: Ikanui EW As Built Dwgs

Scale: 1:500 (A1)
1:1000 (A3)

This drawing is copyright and the property of the author and must not be retained, copied or used without the authority of Civil Services (HB) Ltd.

Title
As–Built Depth of Fill Plan
IKANUI BLOCK SUBDIVISION
Residential Subdivision
562 Ikanui Road
Frimley, Hastings 4120

Dwg. No. DF01
Job No. 21030
Revision A

Date Plotted: Mon Jan 10 14:05:57 2022

ABA20220988
APPROVED - Site Copy
Hastings District Council
20/09/2022

803500mN 803600mN 803700mN

HAWKES BAY EXPRESSWAY

412400mE

LOT 63

EARTH NOISE BUND (NOT PART OF CONTRACT)

LOT 64

LOT 9 LOT 8 LOT 7 LOT 6 LOT 5 LOT 4 LOT 3 LOT 2 LOT 1

LOT 10 LOT 11 LOT 12 LOT 13 LOT 14 LOT 15 LOT 16 LOT 17 LOT 18 LOT 19 LOT 20 LOT 21 LOT 22 LOT 23 LOT 24

LOT 45 LOT 46 LOT 47 LOT 48 LOT 49 LOT 50 LOT 51 LOT 52 LOT 53 LOT 54 LOT 55

LOT 44 LOT 43 LOT 42 LOT 41 LOT 40 LOT 39

LOT 70

LOT 25 LOT 26 LOT 27 LOT 28 LOT 29 LOT 30 LOT 31 LOT 32 LOT 33 LOT 34 LOT 35 LOT 36 LOT 37 LOT 38

LOT 100

LOT 58 LOT 59 LOT 60 LOT 61 LOT 62

LOT 57 LOT 56

LOT 68 (road resevre)

LOT 69 (road reserve)

LOT 70 (road reserve)

803400mN

901 OMAHU ROAD

412500mE

803300mN

412600mE

560 IKANUI ROAD

559 IKANUI ROAD

557 IKANUI ROAD

IKANUI ROAD

412700mE

412800mE

LEGEND

- 24.2 Finished Level Contour
- Lot Boundary (Within subdivision)
- Boundary - Outside subdivision

NOTES

Contours are at 0.1m intervals

All property boundaries outside the subdivision were sourced from LINZ

All property boundaries within the subdivision were sourced August 2021 from Infir

No Finished Level Contours calculated for road reserves, pavement to be finished by others

ENGINEER: Infir Ltd
CONTRACTOR: Galbraith EarthMovers Ltd
SURVEYOR: Civil Services (HB) Ltd

SURVEY DATUM: NZ GEODETIC 2000, Hawkes Bay Circuit
HEIGHT DATUM: HB LOCAL AUTHORITY DATUM 1972 (MSL = 10.00m)
HEIGHT ORIGIN: AP 9 DP414543, RL = 24.10m

Revision	Description	Date
A	For Approval	10/01/2022

Approval

Client: Galbraith EARTHMOVERS

CIVIL SERVICES (HB) LTD
Unit 9, 11 Wakefield Street
PO Box 5011, Napier, 4145
NEW ZEALAND
Phone +64 6 843 6996
Website: www.civilservices.co.nz

Drawn: BN
Designed:
Surveyed: Civil Services HB Ltd
Project: Ikanui EW As Built Dwgs

Scale: 1:500 (A1) 1:1000 (A3)

This drawing is copyright and the property of the author and must not be retained, copied or used without the authority of Civil Services (HB) Ltd.

Title: As–Built Finished Level Plan
IKANUI BLOCK SUBDIVISION
Residential Subdivision
562 Ikanui Road
Frimley, Hastings 4120

Dwg. No. FL01
Job No. 21030
Revision A

Date Plotted: Mon Jan 10 14:05:59 2022

LOCAL AUTHORITY: HASTINGS DISTRICT COUNCIL
ZONING: HASTINGS GENERAL RESIDENTIAL
TOTAL AREA: 5.8254 Ha
COMPRISED IN R.T : HBP3/531 (INTERIM)
REGISTERED OWNERS: C.M & G.F THOW

LEGEND:

- ABUTTAL BOUNDARY
- PROPERTY BOUNDARY
- LEGAL ROAD
- KERB
- EDGE OF SEAL
- FENCE LINE
- POWER LINE
- SEWER
- STORMWATER
- TOP OF BANK
- BOTTOM OF BANK
- MAJOR CONTOUR
- MINOR CONTOUR
- 83.0 CONTOUR VALUE
- SEWER MANHOLE
- STORMWATER MANHOLE
- FIRE HYDRANT
- POWER POLE
- POWER PEDESTAL
- TELECOM PILLAR
- GATE

HAWKES BAY EXPRESSWAY

Hedge on boundary

321.40

58.08

Noise bund

136.61

Lot 2 DP 541537

SSMH
LL = 22.88
IL (out) = 20.27

225ø uPVC SS

750ø RCRRJ SW

SWMH
LL = 22.44
IL (out) = 20.61

Barbary hedge on boundary

144.52

Lot 1 DP 7128

Long drop

Limestone track

Lot 2 DP 7128

45.14

45.22

20.12

124.04

Barbary hedge on boundary

Lot 1 DP 4228

Dripline of trees

202.06

65.18

Hedge

86.11

Pt Lot 1 DP 22834

Lot 203 DP 1664

Scale 1:1500

Overhead wire to dwelling

Drain

Spray shed

Bore

Water stop valve

Lot 19 DP 402620

SWMH
LL = 24.05
IL (out) = 22.35

Lot 18 DP 402620

525ø RCRRJ

150ø mPVC

SSMH
LL = 24.08
IL (out) = 22.70

Benchmark
(AP 9 DP 414543)
RL = 24.10

Lot 1 DP 4228

Shed

IKANUI ROAD

Legal Road (20.12m wide)

Pt Lot 1 DP 2897

Lot 1 DP 7690

Scale 1:400

Notes:

1. Coordinates are in terms of Hawkes Bay 2000.
   Origin of coordinates is AP 9 DP 414543
   803445.925 mN, 412703.796 mE
2. Levels are in terms of Hawkes Bay Local Authority Datum 1972 (MSL +10m)
   Origin of levels is AP 9 DP 414543, RL: 24.10
3. Contour interval = 0.2m

ABA20220988
APPROVED - Site Copy
Hastings District Council
20/09/2022

This plan has been prepared for the purposes of showing Topographical information to plot scale only. Any person using this information for other than its intended purpose do so at their own risk. The services shown on this plan are those visible at the time of survey. Before any construction is undertaken, a full services search should be conducted with the relevant authorities. Boundary information shown is taken from official survey records at the time of survey.The Surveying Company takes no responsibility for dimensions, reduced levels or any other information that is NOT derived directly from the supplied digital content. Contractors shall verify all dimensions on site before commencing work, and refer any discrepancies to THE SURVEYING COMPANY LIMITED. Dimensioned figures always take precedence.Boundaries mathematically defined as part of any electronic dataset must not be accepted in substitution of the requirements for redefinition surveys set out in the Surveyor-General's rules for Cadastral Survey 2010. This dataset is forwarded in its entirety. This plan shall not be amended and/or reprinted without the written permission of THE SURVEYING COMPANY LIMITED.

THE SURVEYING COMPANY
Suite 3, 115e Avenue Road East, Hastings, 4122
(06) 878 6349 | www.surveying.net.nz

CLIENT: GRAHAM THOW

PROJECT: TOPOGRAPHICAL PLAN OF PART LOT 6 DP 285

PLAN TYPE: TOPOGRAPHICAL PLAN

SCALE AT A3:	DRAWN:	CHECKED:
AS SHOWN	WH	GD

DATE:	DRAWING NUMBER:	SHEET:
OCT 2020	202971-TP-01	01 of 01

Original Size A3 Landscape

ABA20220988
APPROVED - Site Copy
Hastings District Council
20/09/2022

Appendix B Earthworks Testing Results

ABA20220988
APPROVED - Site Copy
Hastings District Council
20/09/2022

INVESTIGATION REPORT - GROUND TESTING

PROJECT: Engineered Fill, Lot 5, Stage 1, Ikanui Subdivision, Ikanui, Hastings
CLIENT: Galbraith Earthmovers Ltd
ENGINEER: Initia Ltd
DATE: 9 March 2022
TESTED BY: BN
LOCATIONS: Refer site plan and site photo below
TEST METHODS: Scala Penetrometer

Report Number: CSR22/026

Site Plan and Site Photo, with test locations indicated



Comments:
Test locations were recorded with handheld GPS (+/-3m accuracy). Black line above is an approximate indication of boundary line. Testing undertaken at request of Geotechnical Engineer to confirm the engineered fill here achieved sufficent compaction, as the original NDM (nuclear density meter) testing had shown lower compaction. Results were discussed with Geotechnical Engineer via phone whilst on-site, and the engineer agreed that the depth and results were sufficent. Subdivision road name 'Arihi Crescent' has been adopted from a recent indication on the HDC Intramaps website.

Report written by: BN 9 March 2022
Report reviewed by: NG 9 March 2022
Approved for issue: 10 March 2022

Distribution: 1 GEML
2 Initia Ltd
3 Civil Services File

CIVIL SERVICES (HB) LTD
UNIT 9 11 WAKEFIELD STREET P.O. BOX 5011 NAPIER 4145 PHONE 06 843 6996 EMAIL admin@civilservices.co.nz WEBSITE www.civilservices.co.nz

ABA20220988
APPROVED - Site Copy
Hastings District Council
20/09/2022

INVESTIGATION REPORT - GROUND TESTING

PROJECT: Engineered Fill, Lot 5, Stage 1, Ikanui Subdivision, Ikanui, Hastings
CLIENT: Galbraith Earthmovers Ltd
ENGINEER: Initia Ltd
DATE: 9 March 2022
TESTED BY: BN
TEST SITES: 1 - 3
LOCATIONS: Refer site plan and site photo on page 1
TEST METHODS: Scala Penetrometer

Report Number: CSR22/026

SITE 1

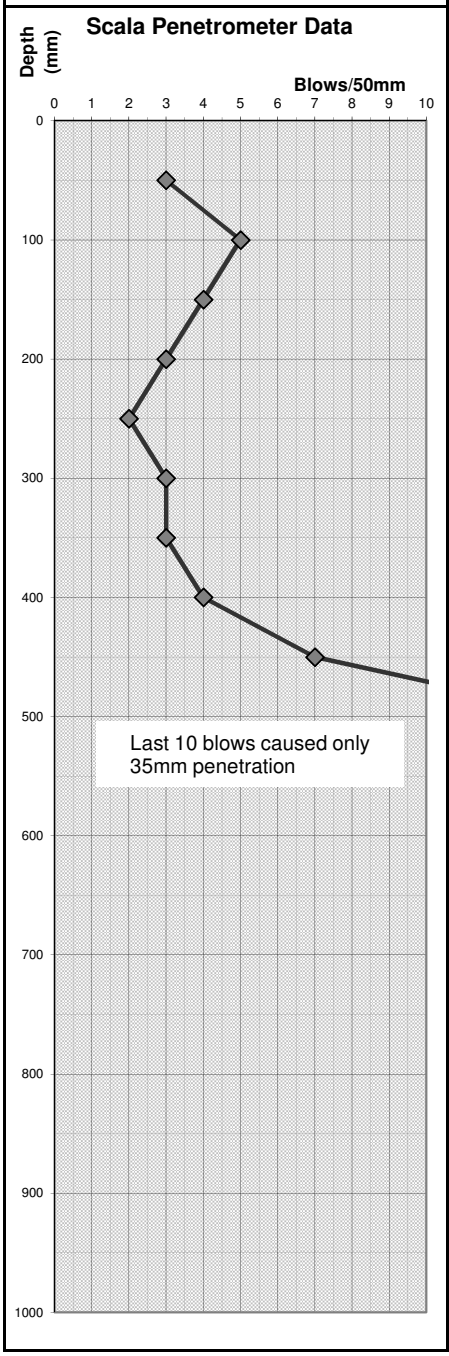

SITE 2

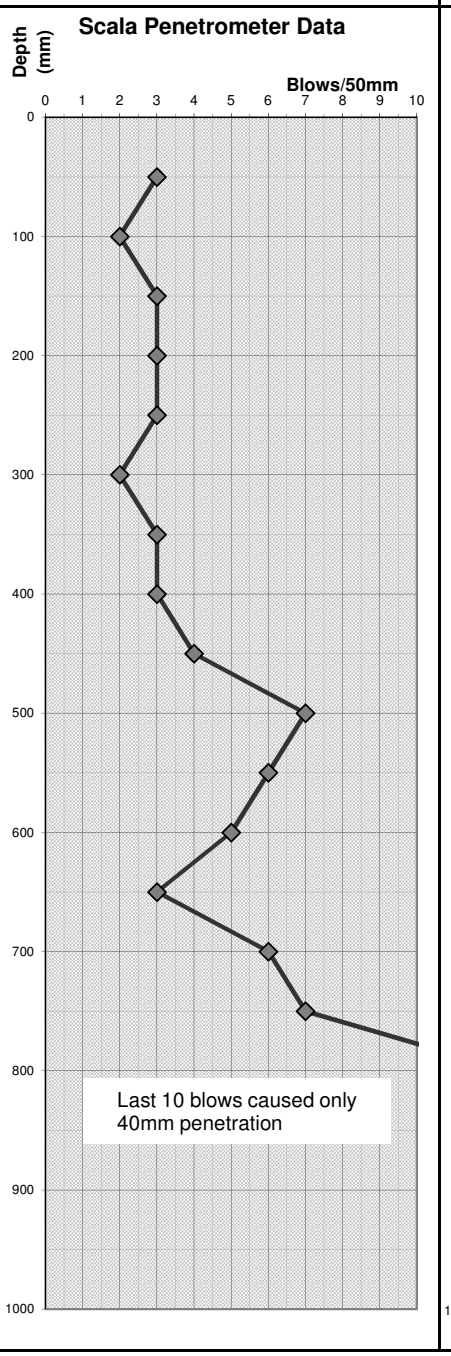

SITE 3

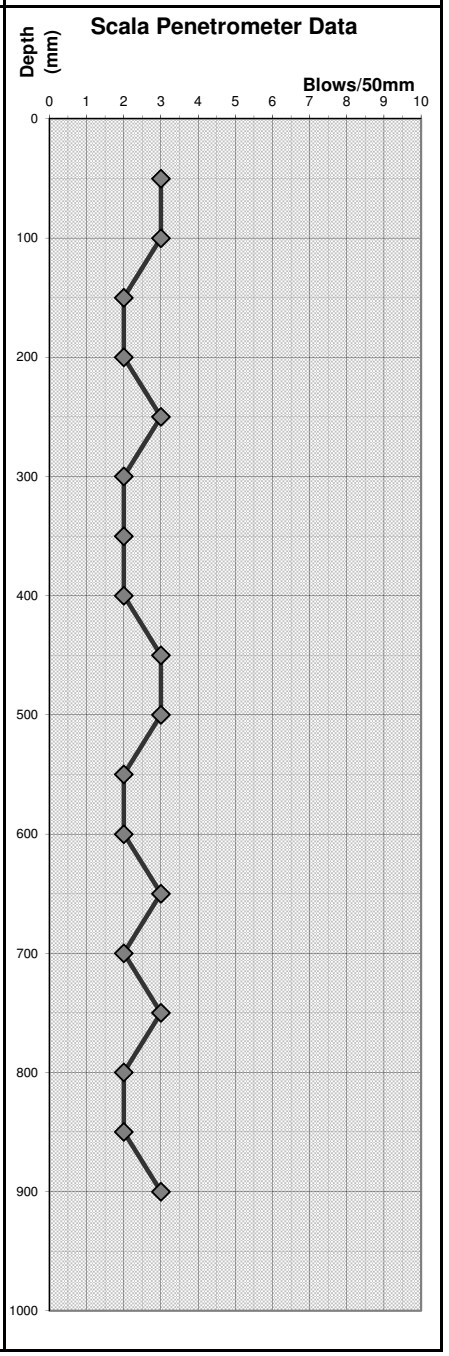

Comments:
Testing ceased at 900mm depth or >10 blows/50mm, whichever occurred first.
Groundwater not observed.

Testing Specifications:
Scala penetrometer testing specification NZS 4402:1988 Test 6.5.2

CIVIL SERVICES (HB) LTD
UNIT 9 11 WAKEFIELD STREET P.O. BOX 5011 NAPIER 4145 PHONE 06 843 6996 EMAIL admin@civilservices.co.nz WEBSITE www.civilservices.co.nz

ABA20220988
APPROVED - Site Copy
Hastings District Council
20/09/2022

INVESTIGATION REPORT - GROUND TESTING

PROJECT:	Engineered Fill, Lot 5, Stage 1, Ikanui Subdivision, Ikanui, Hastings
CLIENT:	Galbraith Earthmovers Ltd
ENGINEER:	Initia Ltd
DATE:	9 March 2022
TESTED BY:	BN
TEST SITE:	4
LOCATION:	Refer site plan and site photo on page 1
TEST METHODS:	Scala Penetrometer

Report Number: CSR22/026

SITE 4

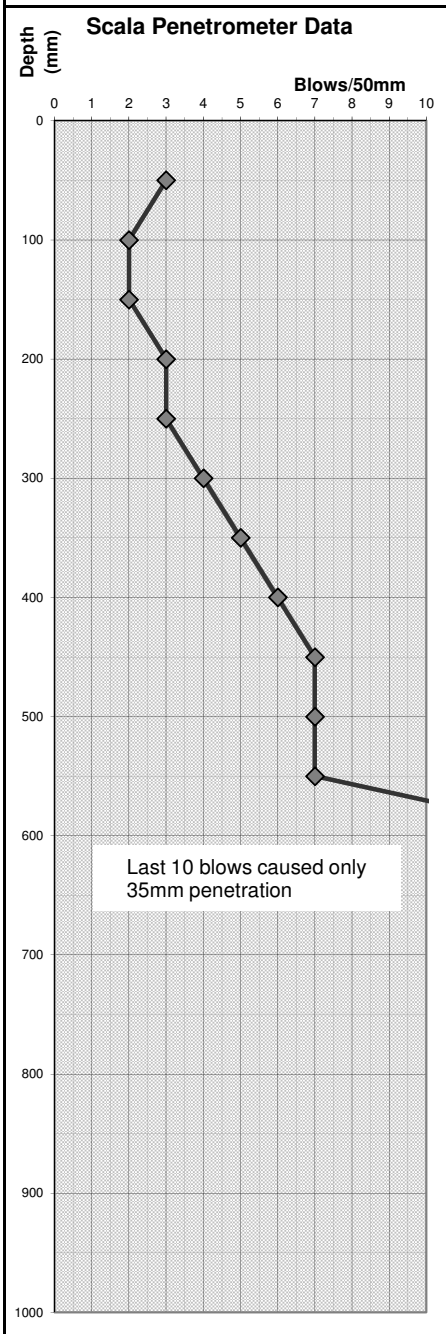

Comments:
Testing ceased at 900mm depth or >10 blows/50mm, whichever occurred first.
Groundwater not observed.

Testing Specifications:
Scala penetrometer testing specification NZS 4402:1988 Test 6.5.2

CIVIL SERVICES (HB) LTD
UNIT 9 11 WAKEFIELD STREET P.O. BOX 5011 NAPIER 4145 PHONE 06 843 6996 EMAIL admin@civilservices.co.nz WEBSITE www.civilservices.co.nz

ABA20220988
APPROVED - Site Copy
Hastings District Council
20/09/2022

DRY DENSITY / WATER CONTENT RELATIONSHIP
STANDARD COMPACTION

Project :	Subdivision
Location :	Ikanui
Client :	N.Nikoliason
Contractor :	Civil Services
Sampled by :	B.Nikolaison
Date sampled :	20/09/21
Sampling method :	Unknown
Sample description :	Sandy silt with some gravel
Sample condition :	Tested as received
Solid density :	2.64 t/m³ (Tested)
Source :	Ikanui

Project No :	2-S4563.00
Lab Ref No :	NA4803
Client Ref No :	

Test Results

Maximum dry density	1.91	t/m³	Natural water content	12.3 %
Optimum water content	12.3	%	Fraction tested	Passing 19mm Test Sieve

Sample ID		-	-2	NAT	2	4		
Bulk density	t/m³	2.019	2.096	2.148	2.163	2.134		
Water content	%	7.3	10.0	12.3	14.1	16.3		
Dry density	t/m³	1.882	1.906	1.914	1.896	1.834		
Sample condition								

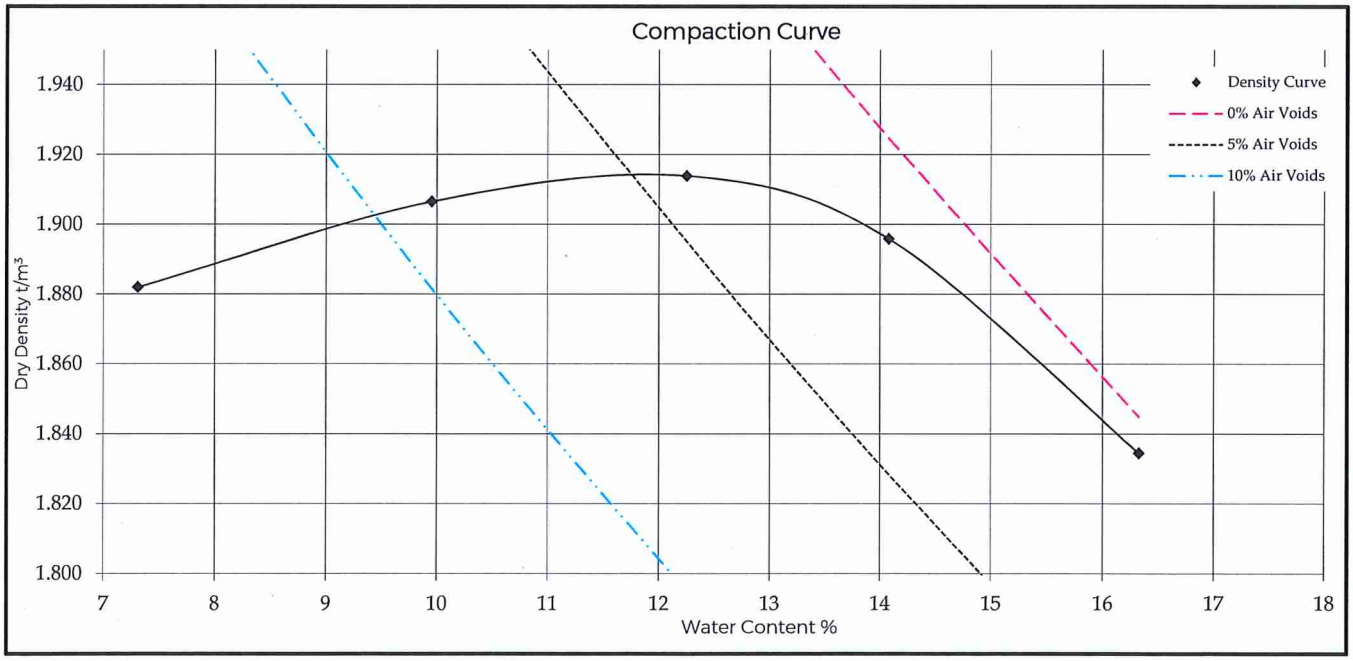

Test Methods		Notes
Compaction	NZS 4402 : 1986 Test 4.1.1 (Standard)	

Date tested : 24/09/21
Date reported : 27/09/21

This report may only be reproduced in full

Approved H. Crichton

Designation : *Senior Civil Engineering Technician*
Date : 28/09/21

WSP
Napier (Cadbury Rd)
Quality Management Systems Certified to ISO 9001

10 Cadbury Rd
Private Bag 6019 , Hawkes Bay Mail Centre, 4142, Napier, New Zealand

Telephone +64 6 833 5100
Website www.wsp.com/nz

ABA20220988
APPROVED - Site Copy
Hastings District Council
20/09/2022

SOLID DENSITY OF SOIL
WORK SHEET

Project No :	2-S4563.00
Lab Ref No :	NA 4803
Client Ref No:	Ikanui Subdivision

Project :	Subdivision		
Location :	Ikanui		
Sampled by :	N. Nikolaison	Date sampled :	20-09-2021
Sampling method :	Unknown		
Sample description :	Sandy SILT, with some Gravel		
Tested by :	H. Crichton	Date :	28/09/2021
Checked by :	H. Crichton	Date :	28/09/2021

Test performed on fraction:	Whole soil
History :	Oven dried
Temperature of water during test :	15.3 °C
Density of water at temperature:	0.9975

Sample No		1			
Gas Jar No		1	B		
Mass of empty gas jar and plate	M1 g	543.6	617.6		
Mass of gas jar, plate and soil	M2 g	1043.6	1117.8		
Mass of gas jar, plate, soil and water	M3 g	1898.5	1929.1		
Mass of gas jar plate and water	M4 g	1587.4	1617.6		
	M2 - M1 g	500	500.2	-	-
	M4 - M3 g	311.1	311.5	-	-
	(M2 - M1) + (M4 - M3) g	188.9	188.7	-	-
Solid density of soil $s = \frac{M2 - M1}{(M2 - M1) + (M4 - M3)} \times w$	t/m³	2.640	2.644	-	-
Mean	t/m³	2.642		-	

Where : s = Solid density of soil (t/m³)

w = Density of water used at temperature of test (t/m³)

Test Method

NZS 4402 : 1986 Test 2.7.1

ABA20220988
APPROVED - Site Copy
Hastings District Council
20/09/2022

DRY DENSITY / WATER CONTENT RELATIONSHIP
STANDARD COMPACTION

Project :	Reference Test
Location :	Ikanui Subdivision
Client :	Niels Nikolaison
Contractor :	Civil Services Ltd
Sampled by :	Civil Services Ltd
Date sampled :	30/09/21
Sampling method :	Unknown
Sample description :	Sandy Silt
Sample condition :	Tested As Received
Solid density :	2.64 t/m³ (Tested)
Source :	On Site

Project No :	2-S4563.00
Lab Ref No :	NA 4847
Client Ref No :	

Test Results

Maximum dry density	1.68 t/m³	Natural water content	15.3 %
Optimum water content	16.7 %	Fraction tested	Whole Soil

Sample ID		Dry	Minus	Nat	EST OMC	Plus	Wet	
Bulk density	t/m³	1.751	1.816	1.886	1.965	1.950	1.906	
Water content	%	10.2	13.0	15.3	16.7	19.1	22.6	
Dry density	t/m³	1.588	1.608	1.636	1.684	1.637	1.555	
Sample condition								

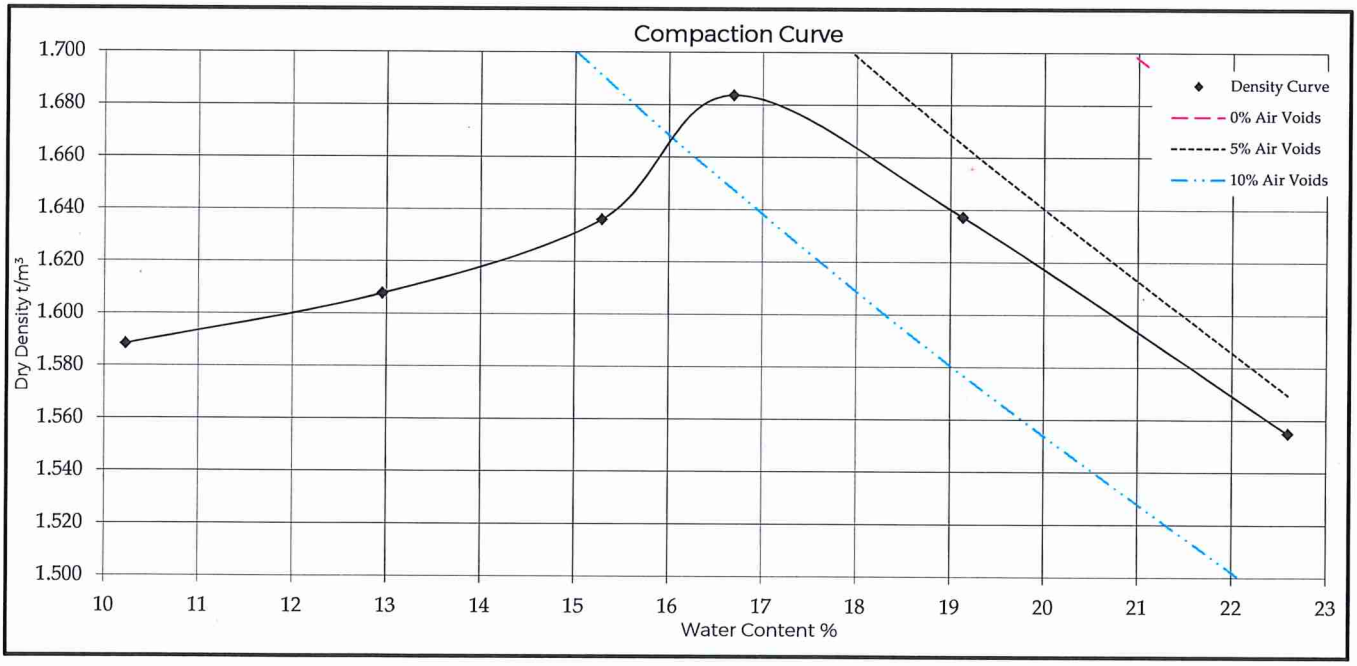

Test Methods		Notes
Compaction	NZS 4402 : 1986 Test 4.1.1 (Standard)	

Date tested : 05/10/21
Date reported : 07/10/21

This report may only be reproduced in full

Approved H. Crichton

Designation : *Senior Civil Engineering Technician*
Date : 07/10/21

WSP
Napier (Cadbury Rd)
Quality Management Systems Certified to ISO 9001

10 Cadbury Rd
Private Bag 6019 , Hawkes Bay Mail Centre, 4142, Napier, New Zealand

Telephone +64 6 833 5100
Website www.wsp.com/nz

ABA20220988
APPROVED - Site Copy
Hastings District Council
20/09/2022

SOLID DENSITY OF SOIL
WORK SHEET

Project No :	2-S4563.00
Lab Ref No :	NA 4847
Client Ref No:	Ikanui Subdivision

Project :	Ikanui Subdivision		
Location :	Unknown		
Sampled by :	Civil Services Ltd	Date sampled	30-9-21
Sampling method :	Unknown		
Sample description :	Sandy Silt		
Tested by :	H. Crichton	Date :	7/10/2021
Checked by :	H. Crichton	Date :	7/10/2021

Test performed on fraction:	Whole soil
History :	Oven dried
Temperature of water during test :	15.3 °C
Density of water at temperature:	0.9975

Sample No		1			
Gas Jar No		B	1		
Mass of empty gas jar and plate	M1 g	617.1	543.1		
Mass of gas jar, plate and soil	M2 g	1117.1	1043.2		
Mass of gas jar, plate, soil and water	M3 g	1927.94	1898.03		
Mass of gas jar plate and water	M4 g	1617.31	1587		
	M2 - M1 g	500	500.1	-	-
	M4 - M3 g	310.63	311.03	-	-
	(M2 - M1) + (M4 - M3) g	189.37	189.07	-	-
Solid density of soil $s = \frac{M2 - M1}{(M2 - M1) + (M4 - M3)} \times w$	t/m³	2.634	2.638	-	-
Mean	t/m³	2.636		-	

Where : s = Solid density of soil (t/m³)

w = Density of water used at temperature of test (t/m³)

Test Method

NZS 4402 : 1986 Test 2.7.1

ABA20220988
APPROVED Site Copy
Hastings District Council
20/09/2022

EARTHWORKS COMPACTION CONTROL TESTING

PROJECT:	Ikanui Subdivision, Ambrosis Backs
CLIENT:	Galbraith Earthmovers Ltd
CONTRACTOR:	Galbraith Earthmovers Ltd
ENGINEER:	Initia Ltd
TESTED BY:	BN/NG
LOCATION:	Refer partial site plan and site photo below
LEVEL:	~0.2 - 0.3m fill depth
MATERIAL:	Silt and Gravel Mix
DATE TESTED:	4 October 2021
TIME:	09:00

Report Number: NDM21/220
Page: 1 of 3

PARTIAL SITE PLAN and SITE PHOTO, with approximate test locations indicated

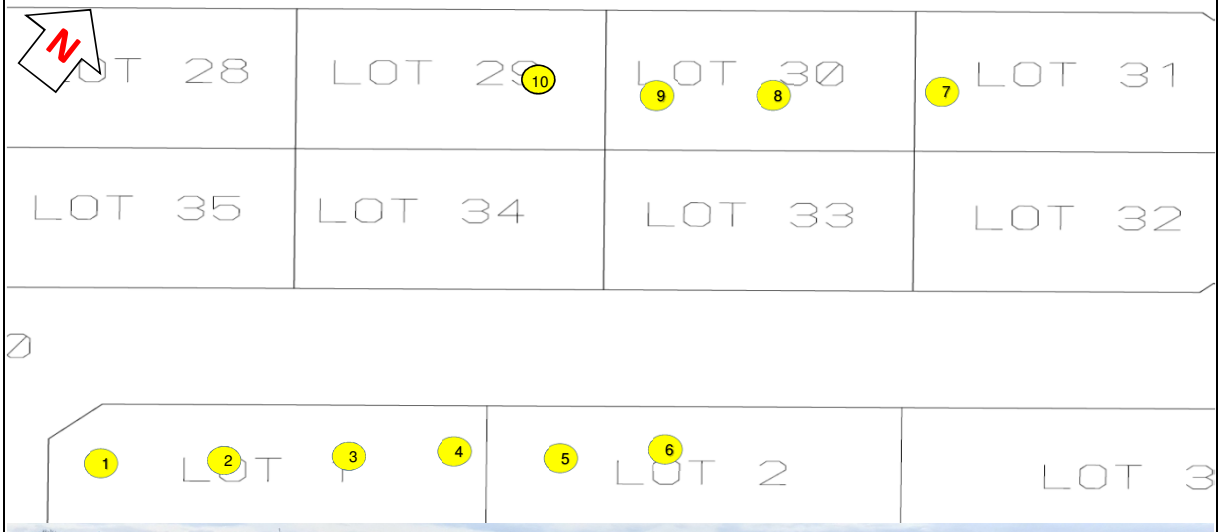



Photo looking approximately northeast

Comments:
The contractor stated that test sites 1 - 5 had an approximate fill depth of 0.3m, with the remainder having approximately 0.2m fill depth. Results were discussed with the contractor, and deemed acceptable according to the provided specification.

Report written by:	NG	6 October 2021
Report reviewed by:	BN	18 October 2021
Approved for issue:		20 October 2021

Distribution:
1 Galbraith EarthMovers Ltd
2 Civil Services File
3 Initia Ltd
4 Infir Ltd

CIVIL SERVICES (HB) LTD
UNIT 9 11 WAKEFIELD STREET P.O. BOX 5011 NAPIER 4145 PHONE 06 843 6996 EMAIL admin@civilservices.co.nz WEBSITE www.civilservices.co.nz

ABA20220988
APPROVED - Site Copy
Hastings District Council
20/09/2022

EARTHWORKS COMPACTION CONTROL TESTING

PROJECT:	Ikanui Subdivision, Undercut Backfill
CLIENT:	Galbraith Earthmovers Ltd
CONTRACTOR:	Galbraith Earthmovers Ltd
ENGINEER	Initia Ltd
TESTED BY:	BN/NG
LOCATION:	Refer partial site plan and site photo on page 1
LEVEL:	~0.2 - 0.3m fill depth
MATERIAL:	Silt and Gravel Mix
DATE TESTED:	4 October 2021
TIME:	09:00

Report Number: NDM21/220
Page: 2 of 3

NUCLEAR DENSITY METER TEST RESULTS

Test Number	1	2	3	4	5	6	7	8	9	10	Mean	Target
Probe Depth (mm)	300	300	300	300	300	200	200	200	200	200		
Wet Density (t/m^3)	2.15	2.18	2.17	2.07	2.18	2.10	2.13	2.08	2.07	2.11	2.12	
Dry Density (t/m^3)	1.96	1.98	1.96	1.88	1.96	1.88	1.94	1.87	1.84	1.89	1.92	
Max. Dry Dens. (t/m^3)	1.91 (Measured)											
Solid Density (t/m^3)	2.64 (Measured)											
Water Cont. (NDM %)	9.5	10.4	10.6	9.8	11.2	11.6	10.1	11.0	12.0	12.0	10.8	
Air Voids (%)	7.1	4.6	4.8	10.2	3.9	7.1	7.0	8.7	8.1	6.1	6.8	<8%
Compaction (%)	102.8	103.5	102.8	98.6	102.7	98.4	101.5	97.9	96.5	98.7	100.3	>95%

PENETROMETER TEST RESULTS

Test Number	1	2	3	4	5	6	7	8	9	10
Depth (mm)	Blows per 50mm									
0-50	2	2	1	2	1	1	3	2	2	2
50-100	2	2	2	3	1	1	4	4	4	3
100-150	2	2	2	3	2	2	5	4	3	3
150-200	2	4	3	5	2	3	4	4	4	3
200-250	3	4	3	7	2	2	5	3	3	3
250-300	5	4	4	7	2	1	5	2	4	3



Photo looking approximately West

Comments:
Maximum dry density and solid density used above are from WSP Report NA 4803 - NZS 4402:1986 Test 4.1.1 (Standard), and NZS 4402:1986 Test 2.7.1.

Test Methods: NZS 4407:2015, Test Method 4.2, Nuclear moisture-density gauge - direct transmission
Dry density, air-voids, and compaction calculated on NDM-measured wet density and water content, with laboratory-determined maximum dry density and solid density.
Scala penetrometer testing specification NZS 4402:1988 Test 6.5.2

CIVIL SERVICES (HB) LTD
UNIT 9 11 WAKEFIELD STREET P.O. BOX 5011 NAPIER 4145 PHONE 06 843 6996 EMAIL admin@civilservices.co.nz WEBSITE www.civilservices.co.nz

ABA20220988
APPROVED - Site Copy
Hastings District Council
20/09/2022

EARTHWORKS COMPACTION CONTROL TESTING

PROJECT: Ikanui Subdivision - Undercut Backfill
CLIENT: Galbraith Earthmovers Ltd
CONTRACTOR: Galbraith Earthmovers Ltd
TESTED BY: BN/NG
LOCATION: Refer partial site plan and site photo on page 1
LEVEL: ~0.2 - 0.3m fill depth
MATERIAL: Silt and Gravel Mix
DATE TESTED: 4 October 2021
TIME: 09:00

Report Number: NDM21/220

OVEN-ADJUSTED NUCLEAR DENSITY METER TEST RESULTS

Test Number	1	2	3	4	5	6	7	8	9	10	Mean	Target
Probe Depth (mm)	300	300	300	300	300	200	200	200	200	200		
Wet Density (t/m^3)	2.15	2.18	2.17	2.07	2.18	2.10	2.13	2.08	2.07	2.11	2.12	
Dry Density (t/m^3)	1.92	1.95	1.93	1.86	1.94	1.84	1.91	1.86	1.86	1.88	1.90	
Max. Dry Dens. (t/m^3)	1.91 (Measured)											
Solid Density (t/m^3)	2.64 (Measured)											
Water Cont. (Oven %)	11.8	11.7	12.6	11.3	12.1	13.9	11.5	11.5	10.8	12.3	12.0	
Air Voids (%)	4.6	3.2	2.6	8.6	2.9	4.7	5.5	8.2	9.3	5.7	5.5	<8%
Compaction (%)	100.6	102.3	101.0	97.3	101.8	96.4	100.2	97.4	97.6	98.4	99.3	>95%

Comments:
Maximum dry density and solid density used above are from WSP Report NA 4803 - NZS 4402:1986 Test 4.1.1 (Standard), and NZS 4402:1986 Test 2.7.1.

Test Methods: NZS 4407:2015, Test Method 4.2, Nuclear moisture-density gauge - direct transmission

Dry density, air-voids, and compaction calculated on NDM-measured wet density and oven-dried water content, with laboratory-determined maximum dry density and solid density.

NZS4402:1986 Test 2.1 Determination of the Water Content.

CIVIL SERVICES (HB) LTD
UNIT 9 11 WAKEFIELD STREET P.O. BOX 5011 NAPIER 4145 PHONE 06 843 6996 EMAIL admin@civilservices.co.nz WEBSITE www.civilservices.co.nz

ABA20220988
APPROVED - Site Copy
Hastings District Council
20/09/2022

EARTHWORKS COMPACTION CONTROL TESTING

PROJECT:	Ikanui Subdivision, Ansen Rise Stage 3
CLIENT:	Galbraith Earthmovers Ltd
CONTRACTOR:	Galbraith Earthmovers Ltd
ENGINEER:	Initia Ltd
TESTED BY:	BN/NG
LOCATION:	Refer partial site plan and site photo below
LEVEL:	~0.4 - 0.6m fill depth
MATERIAL:	sandy SILT
DATE TESTED:	6 October 2021
TIME:	13:00

Report Number: NDM21/223
Page: 1 of 3

PARTIAL SITE PLAN and SITE PHOTO, with approximate test locations indicated

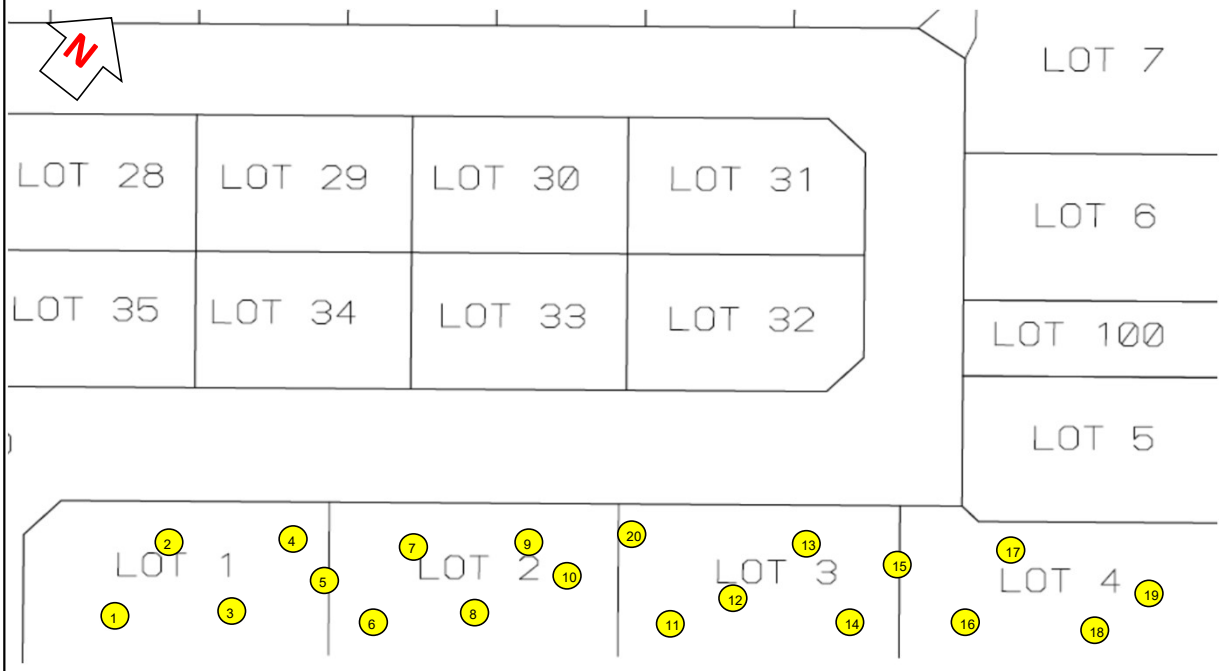



Photo looking approximately northeast

Comments:
Testing undertaken at finished subgrade level, prior to topsoil placement. Results were discussed with the contractor, and deemed acceptable when compared to supplied specification. Test sites 21 and 22 were located on lots 26 and 38 respectively (not shown on plan above).

Report written by:	NG	6 October 2021
Report reviewed by:	BN	18 October 2021
Approved for issue:		4 March 2022

Distribution:
1 Galbraith Earthmovers Ltd
2 Civil Services File
3 Initia Ltd
4 Infir Ltd

CIVIL SERVICES (HB) LTD
UNIT 9 11 WAKEFIELD STREET P.O. BOX 5011 NAPIER 4145 PHONE 06 843 6996 EMAIL admin@civilservices.co.nz WEBSITE www.civilservices.co.nz

ABA20220988
APPROVED - Site Copy
Hastings District Council
20/09/2022

NUCLEAR DENSOMETER READINGS

PROJECT: Ikanui Subdivision, Undercut Backfill
CLIENT: Galbraith Earthmovers Ltd
CONTRACTOR: Galbraith Earthmovers Ltd
ENGINEER Initia Ltd
TESTED BY: BN/NG
LOCATION: Refer partial site plan and site photo on page 1
LEVEL: ~0.4 - 0.6m fill depth
MATERIAL: sandy SILT
DATE TESTED: 6 October 2021
TIME: 13:00

Report Number: NDM21/223

NUCLEAR DENSITY METER TEST RESULTS

Test Number	1	2	3	4	5	6	7	8	9	10	Mean	Target
Probe Depth (mm)	200	300	200	300	200	200	300	200	300	200		
Wet Density (t/m^3)	2.05	2.12	2.01	2.12	2.13	2.11	2.11	2.07	2.08	2.08	2.09	
Dry Density (t/m^3)	1.83	1.90	1.77	1.90	1.87	1.85	1.88	1.81	1.87	1.82	1.85	
Max. Dry Dens. (t/m^3)	1.91 (Measured)											
Solid Density (t/m^3)	2.64 (Measured)											
Water Cont. (NDM %)	11.9	11.6	13.6	11.5	13.6	14.0	11.8	13.9	11.4	14.2	12.8	
Air Voids (%)	9.0	6.2	9.0	6.1	3.6	3.9	6.4	6.1	8.0	5.3	6.4	
Compaction (%)	95.7	99.2	92.5	99.5	98.0	97.0	98.6	95.0	97.7	95.2	96.8	>95%

NUCLEAR DENSITY METER TEST RESULTS

Test Number	11	12	13	14	15	16	17	18	19	20	Mean	Mean (of all)
Probe Depth (mm)	200	200	300	200	300	200	200	200	200	300		
Wet Density (t/m^3)	2.09	2.08	2.11	2.04	2.14	2.08	2.11	2.11	2.07	2.11	2.10	2.09
Dry Density (t/m^3)	1.82	1.84	1.88	1.80	1.90	1.84	1.87	1.89	1.82	1.86	1.85	1.85
Max. Dry Dens. (t/m^3)	1.91 (Measured)											
Solid Density (t/m^3)	2.64 (Measured)											
Water Cont. (NDM %)	14.7	13.4	12.7	13.4	12.8	12.8	12.9	11.8	13.7	13.7	13.2	13.0
Air Voids (%)	4.1	5.8	5.1	7.6	3.8	6.7	4.9	6.3	6.2	4.2	5.5	5.9
Compaction (%)	95.4	96.2	98.2	94.2	99.4	96.4	98.0	98.7	95.2	97.3	96.9	96.9

NUCLEAR DENSITY METER TEST RESULTS

Test Number	21	22									Mean	Target
Probe Depth (mm)	300	300										
Wet Density (t/m^3)	1.84	1.92									1.88	
Dry Density (t/m^3)	1.62	1.68									1.65	
Max. Dry Dens. (t/m^3)	1.68 (Measured)											
Solid Density (t/m^3)	2.64 (Measured)											
Water Cont. (NDM %)	13.7	14.4									14.1	
Air Voids (%)	16.6	12.4									14.5	
Compaction (%)	96.3	99.8									98.0	

Comments:
Maximum dry density and solid density used on test sites 1 - 20 use WSP Report NA 4803 - NZS 4402:1986 Test 4.1.1 (Standard), and NZS 4402:1986 Test 2.7.1.
Maximum dry density and solid density used on test sites 21 - 22 use WSP Report NA 4847 - NZS 4402:1986 Test 4.1.1 (Standard), and NZS 4402:1986 Test 2.7.1.

Test Methods: NZS 4407:2015, Test Method 4.3, Nuclear moisture-density gauge - backscatter mode
Dry density, air-voids, and compaction calculated on NDM-measured wet density and water content, with laboratory-determined maximum dry density and solid density.

CIVIL SERVICES (HB) LTD
UNIT 9 11 WAKEFIELD STREET P.O. BOX 5011 NAPIER 4145 PHONE 06 843 6996 EMAIL admin@civilservices.co.nz WEBSITE www.civilservices.co.nz

ABA20220988
APPROVED - Site Copy
Hastings District Council
20/09/2022

EARTHWORKS COMPACTION CONTROL TESTING

PROJECT: Ikanui Subdivision, Undercut Backfill
CLIENT: Galbraith Earthmovers Ltd
CONTRACTOR: Galbraith Earthmovers Ltd
TESTED BY: BN/NG
LOCATION: Refer partial site plan and site photo on page 1
LEVEL: ~0.4 - 0.6m fill depth
MATERIAL: sandy SILT
DATE TESTED: 6-Oct-21
TIME: 13:00

Report Number: NDM21/223

OVEN-ADJUSTED NUCLEAR DENSITY METER TEST RESULTS

Test Number	1	2	3	4	5	6	7	8	9	10	Mean	Target
Probe Depth (mm)	200	300	200	300	200	200	300	200	300	200		
Wet Density (t/m^3)	2.05	2.12	2.01	2.12	2.13	2.11	2.11	2.07	2.08	2.08	2.09	
Dry Density (t/m^3)	1.80	1.87	1.79	1.88	1.87	1.85	1.89	1.80	1.84	1.83	1.84	
Max. Dry Dens. (t/m^3)	1.91 (Measured)											
Solid Density (t/m^3)	2.64 (Measured)											
Water Cont. (Oven %)	13.5	13.2	12.5	12.4	13.9	13.9	11.5	14.6	13.0	13.5	13.2	
Air Voids (%)	7.5	4.6	10.1	5.2	3.3	4.0	6.8	5.4	6.4	6.0	5.9	<12%
Compaction (%)	94.4	97.9	93.5	98.7	97.8	97.0	98.9	94.4	96.4	95.8	96.5	>95%

OVEN-ADJUSTED NUCLEAR DENSITY METER TEST RESULTS

Test Number	11	12	13	14	15	16	17	18	19	20	Mean	Target
Probe Depth (mm)	200	200	300	200	300	200	200	200	200	300		
Wet Density (t/m^3)	2.09	2.08	2.11	2.04	2.14	2.08	2.11	2.11	2.07	2.11	2.10	
Dry Density (t/m^3)	1.82	1.81	1.85	1.76	1.89	1.83	1.86	1.89	1.79	1.86	1.83	
Max. Dry Dens. (t/m^3)	1.91 (Measured)											
Solid Density (t/m^3)	2.64 (Measured)											
Water Cont. (Oven %)	14.7	15.0	14.3	16.2	13.5	13.6	13.7	11.9	15.5	13.7	14.2	
Air Voids (%)	4.1	4.3	3.5	5.0	3.1	5.9	4.1	6.2	4.4	4.1	4.5	<12%
Compaction (%)	95.4	94.9	96.8	92.0	98.8	95.7	97.4	98.7	93.7	97.3	96.1	>95%

OVEN-ADJUSTED NUCLEAR DENSITY METER TEST RESULTS

Test Number	21	22									Mean	Target
Probe Depth (mm)	300	300										
Wet Density (t/m^3)	1.84	1.92									1.88	
Dry Density (t/m^3)	1.59	1.66									1.62	
Max. Dry Dens. (t/m^3)	1.68 (Measured)											
Solid Density (t/m^3)	2.64 (Measured)											
Water Cont. (Oven %)	15.9	15.5									15.7	
Air Voids (%)	14.7	11.5									13.1	<12%
Compaction (%)	94.5	98.8									96.6	>95%

Comments:
Maximum dry density and solid density used on test sites 1 - 20 use WSP Report NA 4803 - NZS 4402:1986 Test 4.1.1 (Standard), and NZS 4402:1986 Test 2.7.1.
Maximum dry density and solid density used on test sites 21 - 22 use WSP Report NA 4847 - NZS 4402:1986 Test 4.1.1 (Standard), and NZS 4402:1986 Test 2.7.1.

Test Methods: NZS4407:2015 Test 4.2 Nuclear Surface Moisture-Density Gauge - Direct Transmission mode

Air voids, dry density, and compaction calculated on NDM-measured wet density and oven-dried water content, with laboratory-determined solid density and maximum dry density.

NZS4402:1986 Test 2.1 Determination of the Water Content.

CIVIL SERVICES (HB) LTD
UNIT 9 11 WAKEFIELD STREET P.O. BOX 5011 NAPIER 4145 PHONE 06 843 6996 EMAIL admin@civilservices.co.nz WEBSITE www.civilservices.co.nz

ABA20220988
APPROVED - Site Copy
Hastings District Council
20/09/2022

EARTHWORKS COMPACTION CONTROL TESTING

PROJECT:	Stage 1, Ikanui Subdivision, Hastings - Undercut Backfill.
CLIENT:	Galbraith Earthmovers Ltd
CONTRACTOR:	Galbraith Earthmovers Ltd
ENGINEER:	Initia Ltd
TESTED BY:	BN/NG
LOCATION:	Refer partial site plan and site photo below
LEVEL:	~0.2 - 0.6m fill depth
MATERIAL:	sandy SILT
DATE TESTED:	15 October 2021
TIME:	14:00

Report Number: NDM21/229

PARTIAL SITE PLAN and SITE PHOTO, with approximate test locations indicated

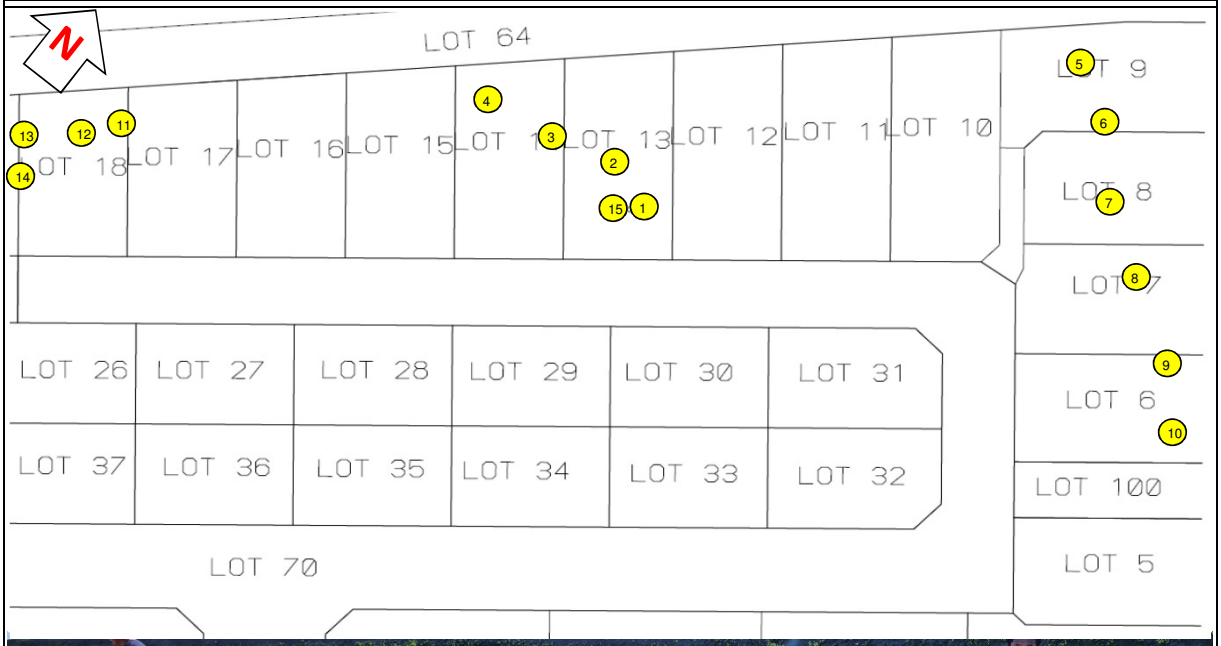

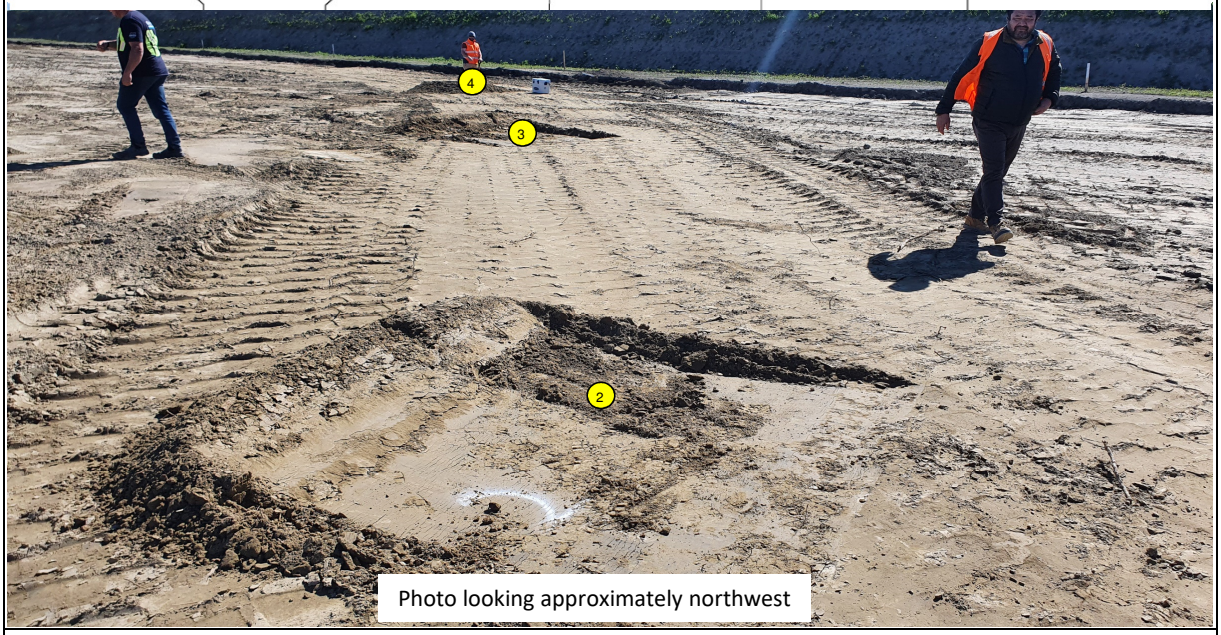

Photo looking approximately northwest

Comments:
Testing undertaken on filled undercut areas (which had contained organics and required further excavation). Test site 1 was undertaken at fill depth approximately ~0.2m and test site 15 was taken in same area after the contractor had placed an additional ~0.35m fill. Results were discussed with the geotechnical engineer via phone, who advised performing a Scala penetrometer test. Penetrometer results were also discussed with the geotechnical engineer, who advised that future fill placement would require additional moisture. This information was relayed back to the contractor.

Report written by:	BN	29 October 2021
Report reviewed by:	NG	29 October 2021
Approved for issue:		15 November 2021

Distribution:
1 Galbraith Earthmovers Ltd
2 Initia Ltd
3 Infir Ltd
4 Civil Services File

UNIT 9 11 WAKEFIELD STREET P.O. BOX 5011 NAPIER 4145 PHONE 06 843 6996 EMAIL admin@civilservices.co.nz WEBSITE www.civilservices.co.nz

ABA20220988
APPROVED - Site Copy
Hastings District Council
20/09/2022

NUCLEAR DENSOMETER READINGS

PROJECT:	Stage 1, Ikanui Subdivision, Hastings - Undercut Backfill.
CLIENT:	Galbraith Earthmovers Ltd
CONTRACTOR:	Galbraith Earthmovers Ltd
ENGINEER	Initia Ltd
TESTED BY:	BN/NG
LOCATION:	Refer partial site plan and site photo on page 1
LEVEL:	~0.2 - 0.6m fill depth
MATERIAL:	sandy SILT
DATE TESTED:	15 October 2021
TIME:	14:00

Report Number: NDM21/229

NUCLEAR DENSITY METER TEST RESULTS

Test Number	1	2	3	4	5	6	7	8	9	10	Mean	Target
Probe Depth (mm)	200	300	300	300	300	300	300	300	200	200		
Wet Density (t/m^3)	1.90	1.99	1.95	1.93	1.84	1.88	1.89	1.87	1.86	1.90	1.90	
Dry Density (t/m^3)	1.65	1.76	1.70	1.72	1.61	1.67	1.65	1.64	1.64	1.67	1.67	
Max. Dry Dens. (t/m^3)	1.68 (Measured)											
Solid Density (t/m^3)	2.64 (Measured)											
Water Cont. (NDM %)	14.9	12.9	14.5	12.2	13.9	12.6	14.5	13.8	13.1	13.5	13.6	
Air Voids (%)	12.6	10.5	10.8	13.9	16.4	15.7	13.4	15.0	16.1	14.1	13.9	
Compaction (%)	98.4	104.8	101.3	102.1	96.0	99.3	98.4	97.7	97.9	99.5	99.5	>95%

NUCLEAR DENSITY METER TEST RESULTS

Test Number	11	12	13	14	15						Mean	Mean (of all)
Probe Depth (mm)	200	200	200	200	300							
Wet Density (t/m^3)	1.84	1.85	1.90	1.90	1.83						1.86	1.89
Dry Density (t/m^3)	1.58	1.62	1.66	1.69	1.56						1.62	1.65
Max. Dry Dens. (t/m^3)	1.68 (Measured)											
Solid Density (t/m^3)	2.64 (Measured)											
Water Cont. (NDM %)	17.1	14.3	14.5	12.7	17.3						15.1	14.1
Air Voids (%)	13.4	15.4	13.1	14.6	14.0						14.1	13.9
Compaction (%)	93.8	96.5	98.7	100.5	92.7						96.4	98.5

Comments:
Maximum dry density and solid density used are from WSP Report NA 4847 - NZS 4402:1986 Test 4.1.1 (Standard), and NZS 4402:1986 Test 2.7.1.

Test Methods: NZS 4407:2015, Test Method 4.3, Nuclear moisture-density gauge - backscatter mode
Dry density, air-voids, and compaction calculated on NDM-measured wet density and water content, with laboratory-determined maximum dry density and solid density.

CIVIL SERVICES (HB) LTD
UNIT 9 11 WAKEFIELD STREET P.O. BOX 5011 NAPIER 4145 PHONE 06 843 6996 EMAIL admin@civilservices.co.nz WEBSITE www.civilservices.co.nz

ABA20220988
APPROVED - Site Copy
Hastings District Council
20/09/2022

EARTHWORKS COMPACTION CONTROL TESTING

PROJECT: Stage 1, Ikanui Subdivision, Hastings - Undercut Backfill.
CLIENT: Galbraith Earthmovers Ltd
CONTRACTOR: Galbraith Earthmovers Ltd
TESTED BY: BN/NG
LOCATION: Refer partial site plan and site photo on page 1
LEVEL: ~0.2 - 0.6m fill depth
MATERIAL: sandy SILT
DATE TESTED: 15-Oct-21
TIME: 14:00

Report Number: NDM21/229

OVEN-ADJUSTED NUCLEAR DENSITY METER TEST RESULTS

Test Number	1	2	3	4	5	6	7	8	9	10	Mean	Target
Probe Depth (mm)	200	300	300	300	300	300	300	300	200	200		
Wet Density (t/m^3)	1.90	1.99	1.95	1.93	1.84	1.88	1.89	1.87	1.86	1.90	1.90	
Dry Density (t/m^3)	1.64	1.74	1.70	1.67	1.62	1.65	1.68	1.63	1.61	1.68	1.66	
Max. Dry Dens. (t/m^3)	1.68 (Measured)											
Solid Density (t/m^3)	2.64 (Measured)											
Water Cont. (Oven %)	15.7	14.0	14.7	15.7	13.7	13.7	12.6	14.3	15.3	13.2	14.3	
Air Voids (%)	11.9	9.4	10.6	10.8	16.6	14.7	15.1	14.6	14.2	14.4	13.2	<12%
Compaction (%)	97.8	103.8	101.1	99.1	96.2	98.3	100.0	97.3	96.0	99.7	98.9	>95%

OVEN-ADJUSTED NUCLEAR DENSITY METER TEST RESULTS

Test Number	11	12	13	14	15						Mean	Mean (of all)
Probe Depth (mm)	200	200	200	200	300							
Wet Density (t/m^3)	1.84	1.85	1.90	1.90	1.83						1.86	1.89
Dry Density (t/m^3)	1.56	1.63	1.65	1.65	1.59						1.62	1.65
Max. Dry Dens. (t/m^3)	1.68 (Measured)											
Solid Density (t/m^3)	2.64 (Measured)											
Water Cont. (Oven %)	18.3	13.6	15.3	15.3	14.6						15.4	14.7
Air Voids (%)	12.3	16.0	12.3	12.2	16.2						13.8	13.4
Compaction (%)	92.7	97.1	98.0	98.2	94.9						96.2	98.0

Comments:
Maximum dry density and solid density used are from WSP Report NA 4847 - NZS 4402:1986 Test 4.1.1 (Standard), and NZS 4402:1986 Test 2.7.1.

Air voids, dry density, and compaction calculated on NDM-measured wet density and oven-dried water content, with laboratory-determined solid density and maximum dry density.

NZS4402:1986 Test 2.1 Determination of the Water Content.

CIVIL SERVICES (HB) LTD
UNIT 9 11 WAKEFIELD STREET P.O. BOX 5011 NAPIER 4145 PHONE 06 843 6996 EMAIL admin@civilservices.co.nz WEBSITE www.civilservices.co.nz

ABA20220988
APPROVED - Site Copy
Hastings District Council
20/09/2022

EARTHWORKS COMPACTION CONTROL TESTING

PROJECT:	Stage 1, Ikanui Subdivision, Hastings - Undercut Backfill.
CLIENT:	Galbraith Earthmovers Ltd
CONTRACTOR:	Galbraith Earthmovers Ltd
ENGINEER:	Initia Ltd
TESTED BY:	BN/NG
LOCATION:	Refer partial site plan and site photo below
LEVEL:	~0.4m fill depth
MATERIAL:	sandy Silt
DATE TESTED:	19 October 2021
TIME:	11:00

Report Number: NDM21/238
Page: 1 of 3

PARTIAL SITE PLAN and SITE PHOTO, with approximate test locations indicated

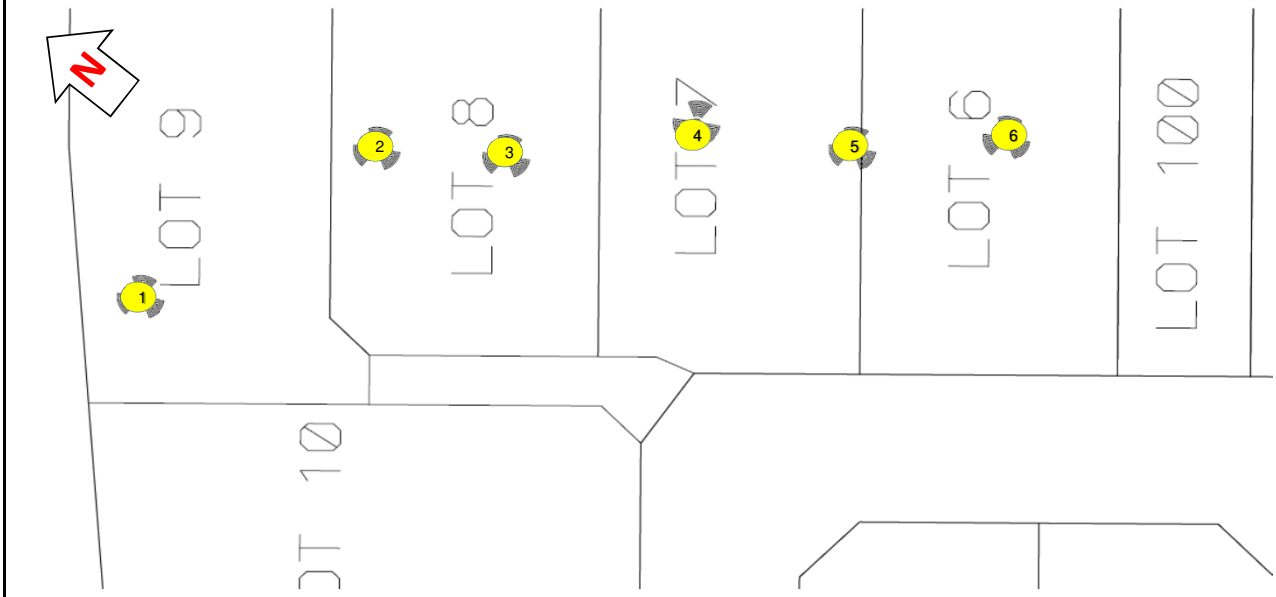

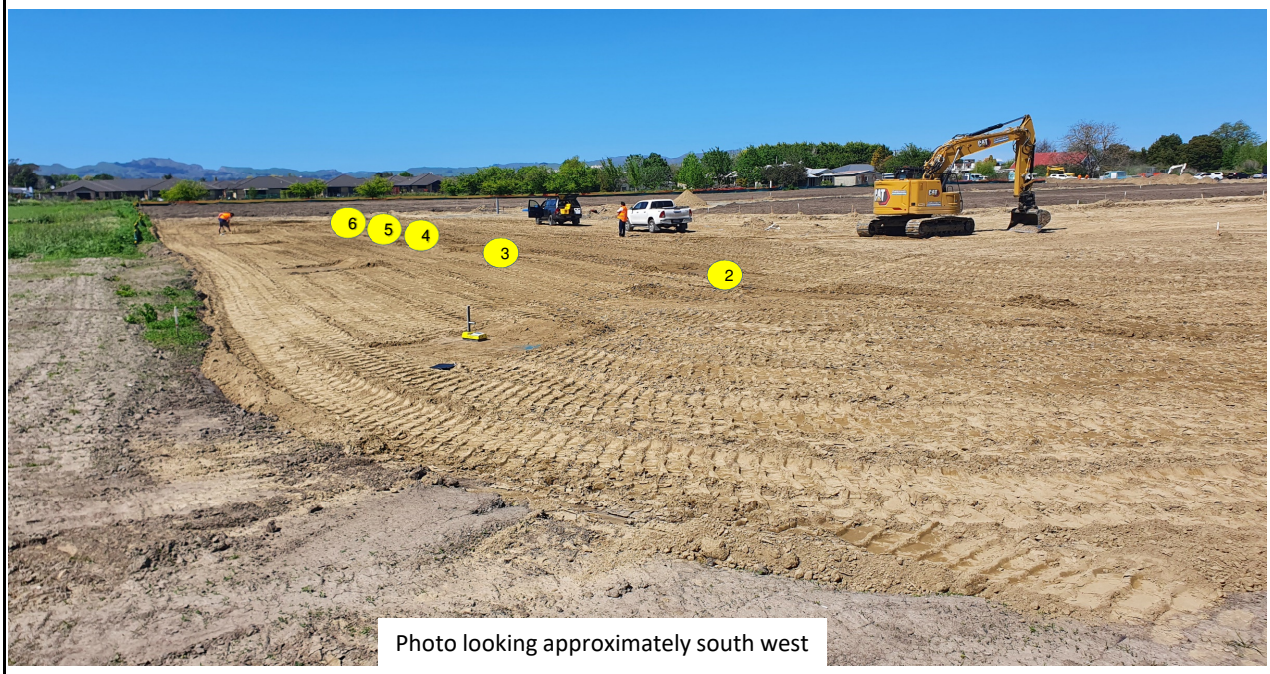

Photo looking approximately south west

Comments:
The contractor advised placed fill was approximately 400mm thick. Results were discussed with the contractor and Infir's representative onsite, these were deemed acceptable. Photo above shows additional test areas (including where the NDM is located), however, results from such areas have been ignored as it was later determined that there was insufficent fill depth in such areas (readings dominated by non-fill material).

Report written by:	BN	3 November 2021
Report reviewed by:	NG	4 November 2021
Approved for issue:		12 January 2022

Distribution:
1 Galbraith EarthMovers Ltd
2 Infir Ltd
3 Initia Ltd
4 Civil Services File

CIVIL SERVICES (HB) LTD
UNIT 9 11 WAKEFIELD STREET P.O. BOX 5011 NAPIER 4145 PHONE 06 843 6996 EMAIL admin@civilservices.co.nz WEBSITE www.civilservices.co.nz

ABA20220988
APPROVED - Site Copy
Hastings District Council
20/09/2022

EARTHWORKS COMPACTION CONTROL TESTING

PROJECT:	Stage 1, Ikanui Subdivision, Hastings - Undercut Backfill.
CLIENT:	Galbraith Earthmovers Ltd
CONTRACTOR:	Galbraith Earthmovers Ltd
ENGINEER	Initia Ltd
TESTED BY:	BN/NG
LOCATION:	Refer partial site plan and site photo on page 1
LEVEL:	~0.4m fill depth
MATERIAL:	sandy Silt
DATE TESTED:	19 October 2021
TIME:	11:00

Report Number: NDM21/238

NUCLEAR DENSITY METER TEST RESULTS

Test Number	1	2	3	4	5	6					Mean	Target
Probe Depth (mm)	300	300	300	300	300	300						
Wet Density (t/m^3)	1.96	1.91	1.97	1.93	1.96	2.01					1.96	
Dry Density (t/m^3)	1.70	1.68	1.69	1.65	1.70	1.75					1.69	
Max. Dry Dens. (t/m^3)	1.68 (Measured)											
Solid Density (t/m^3)	2.64 (Measured)											
Water Cont. (NDM %)	15.3	13.9	16.4	16.8	15.5	15.2					15.5	
Air Voids (%)	9.6	12.9	8.3	9.5	9.3	7.3					9.5	<8%
Compaction (%)	101.0	99.9	100.5	98.5	101.0	103.9					100.8	>95%

PENETROMETER TEST RESULTS

Test Number	2
Depth (mm)	Blows per 50mm
0-50	1
50-100	2
100-150	2
150-200	2
200-250	2
250-300	2
300-350	2
350-400	2
400-450	2
450-500	3
500-550	2
550-600	3

Comments:
Maximum dry density and solid density used above are from WSP Report NA 4847 - NZS 4402:1986 Test 4.1.1 (Standard), and NZS 4402:1986 Test 2.7.1.

Test Methods: NZS 4407:2015, Test Method 4.2, Nuclear moisture-density gauge - direct transmission
Dry density, air-voids, and compaction calculated on NDM-measured wet density and water content, with laboratory-determined maximum dry density and solid density.
Scala penetrometer testing specification NZS 4402:1988 Test 6.5.2

CIVIL SERVICES (HB) LTD
UNIT 9 11 WAKEFIELD STREET P.O. BOX 5011 NAPIER 4145 PHONE 06 843 6996 EMAIL admin@civilservices.co.nz WEBSITE www.civilservices.co.nz

ABA20220988
APPROVED - Site Copy
Hastings District Council
20/09/2022

EARTHWORKS COMPACTION CONTROL TESTING

PROJECT: Stage 1, Ikanui Subdivision, Hastings - Undercut Backfill.
CLIENT: Galbraith Earthmovers Ltd
CONTRACTOR: Galbraith Earthmovers Ltd
TESTED BY: BN/NG
LOCATION: Refer partial site plan and site photo on page 1
LEVEL: ~0.4m fill depth
MATERIAL: sandy Silt
DATE TESTED: 19 October 2021
TIME: 11:00

Report Number: NDM21/238

OVEN-ADJUSTED NUCLEAR DENSITY METER TEST RESULTS

Test Number	1	2	3	4	5	6					Mean	Target
Probe Depth (mm)	300	300	300	300	300	300						
Wet Density (t/m^3)	1.96	1.91	1.97	1.93	1.96	2.01					1.96	
Dry Density (t/m^3)	1.70	1.64	1.66	1.67	1.69	1.71					1.68	
Max. Dry Dens. (t/m^3)	1.68 (Measured)											
Solid Density (t/m^3)	2.64 (Measured)											
Water Cont. (Oven %)	15.0	17.0	18.5	15.9	15.6	17.8					16.7	
Air Voids (%)	9.9	10.2	6.4	10.3	9.2	4.8					8.5	<8%
Compaction (%)	101.3	97.3	98.7	99.2	100.9	101.6					99.8	>95%

Comments:
Maximum dry density and solid density used above are from WSP Report NA 4847 - NZS 4402:1986 Test 4.1.1 (Standard), and NZS 4402:1986 Test 2.7.1.

Test Methods: NZS 4407:2015, Test Method 4.2, Nuclear moisture-density gauge - direct transmission

Dry density, air-voids, and compaction calculated on NDM-measured wet density and oven-dried water content, with laboratory-determined maximum dry density and solid density.

NZS4402:1986 Test 2.1 Determination of the Water Content.

CIVIL SERVICES (HB) LTD
UNIT 9 11 WAKEFIELD STREET P.O. BOX 5011 NAPIER 4145 PHONE 06 843 6996 EMAIL admin@civilservices.co.nz WEBSITE www.civilservices.co.nz

ABA20220988
APPROVED - Site Copy
Hastings District Council
20/09/2022

EARTHWORKS COMPACTION CONTROL TESTING

PROJECT:	Stages 1 & 2, Ikanui Subdivision, Hastings - Engineering Fill.
CLIENT:	Galbraith Earthmovers Ltd
CONTRACTOR:	Galbraith Earthmovers Ltd
ENGINEER:	Initia Ltd
TESTED BY:	BN/NN
LOCATION:	Refer partial site plan and site photo below
LEVEL:	~0.4m Fill
MATERIAL:	Sandy Silt
DATE TESTED:	10 November 2021
TIME:	9:30

Report Number: NDM21/247

PARTIAL SITE PLAN and SITE PHOTO, with approximate test locations indicated

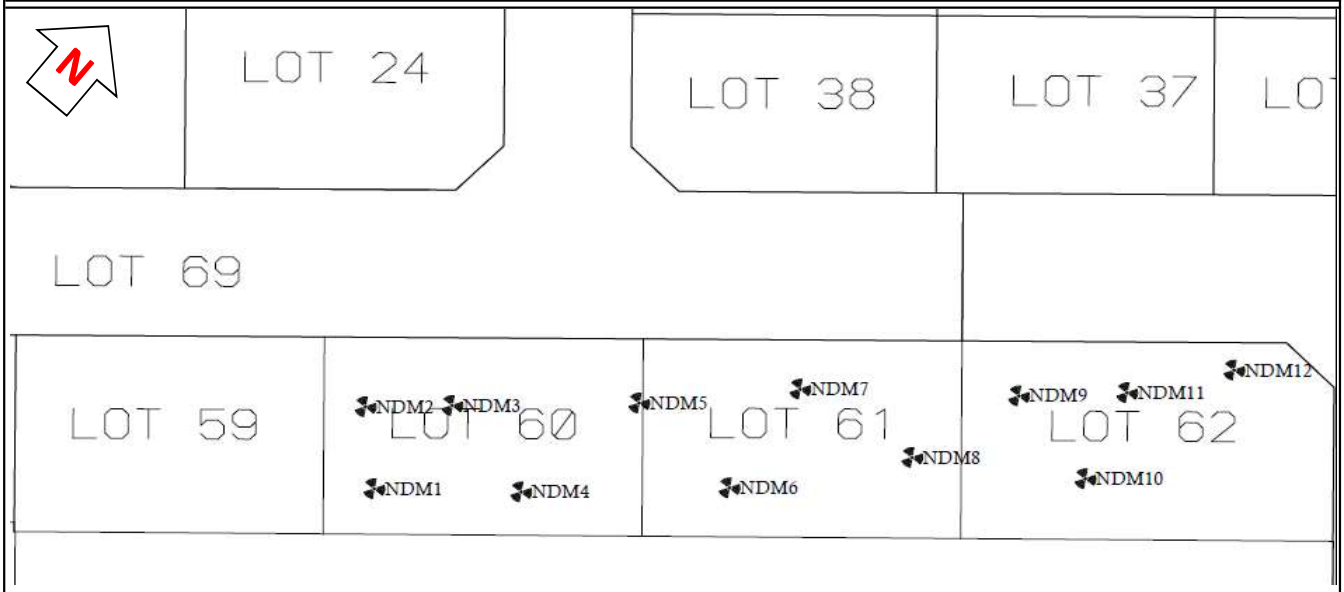

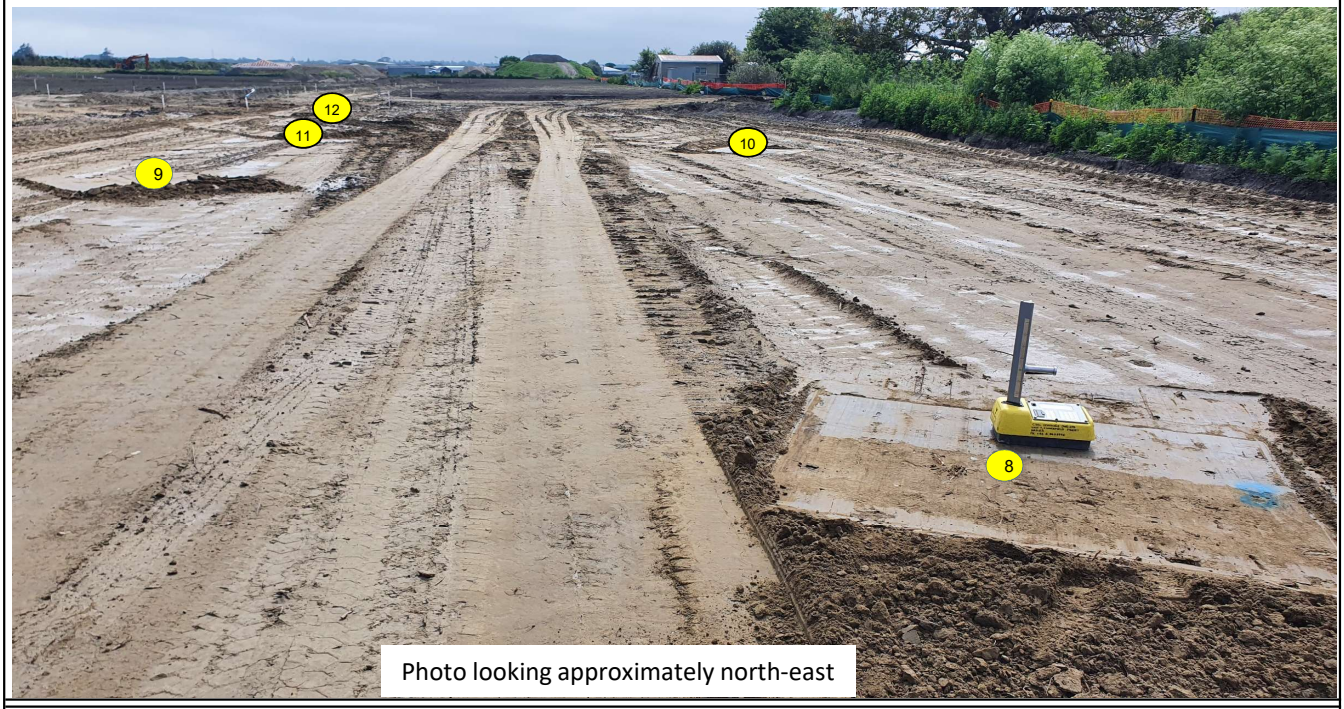

Photo looking approximately north-east

Comments:
The contractor advised placed fill was approximately 400mm thick. Results were discussed with the Engineer and were deemed acceptable after scala penetrometer testing determined that the compacted material achieved the desired kPa reading.

Report written by:	HN	2 December 2021
Report reviewed by:	LE	11 January 2022
Approved for issue:		12 January 2022

Distribution:
1 Galbraith EarthMovers Ltd
2 Civil Services File
3 Initia Ltd
4 Infir Ltd

UNIT 9 11 WAKEFIELD STREET P.O. BOX 5011 NAPIER 4145 PHONE 06 843 6996 EMAIL admin@civilservices.co.nz WEBSITE www.civilservices.co.nz

ABA20220988
APPROVED - Site Copy
Hastings District Council
20/09/2022

EARTHWORKS COMPACTION CONTROL TESTING

CIVIL SERVICES (HB) LTD

PROJECT: Stages 1 & 2, Ikanui Subdivision, Hastings - Engineering Fill.
CLIENT: Galbraith Earthmovers Ltd
CONTRACTOR: Galbraith Earthmovers Ltd
ENGINEER Initia Ltd
TESTED BY: BN/NN
LOCATION: Refer partial site plan and site photo on page 1
LEVEL: ~0.4m Fill
MATERIAL: Sandy Silt
DATE TESTED: 10 November 2021
TIME: 9:30

NUCLEAR DENSITY METER TEST RESULTS

Test Number	1	2	3	4	5	6	7	8	9	10	Mean	Target
Probe Depth (mm)	200	200	200	200	200	200	200	200	200	200		
Wet Density (t/m^3)	1.89	2.01	1.91	1.92	1.97	1.97	1.99	2.02	1.98	1.93	1.96	
Dry Density (t/m^3)	1.67	1.72	1.65	1.66	1.69	1.68	1.71	1.74	1.73	1.69	1.69	
Max. Dry Dens. (t/m^3)	1.68 (Measured)											
Solid Density (t/m^3)	2.64 (Measured)											
Water Cont. (NDM %)	13.3	16.6	15.6	15.4	16.2	17.2	16.9	15.9	14.6	14.1	15.6	
Air Voids (%)	14.5	6.1	11.7	11.2	8.2	7.5	6.5	6.3	9.5	12.0	9.3	<8%
Compaction (%)	99.3	102.4	98.3	99.0	100.8	99.9	101.5	103.6	102.7	100.8	100.8	>95%

NUCLEAR DENSITY METER TEST RESULTS

Test Number	11	12	Mean	Mean (of all)
Probe Depth (mm)	200	200		
Wet Density (t/m^3)	2.02	1.98	2.00	1.96
Dry Density (t/m^3)	1.77	1.71	1.74	1.70
Max. Dry Dens. (t/m^3)	1.68 (Measured)			
Solid Density (t/m^3)	2.64 (Measured)			
Water Cont. (NDM %)	14.3	15.7	15.0	15.5
Air Voids (%)	7.6	8.3	7.9	9.1
Compaction (%)	105.2	101.9	103.6	101.3

PENETROMETER TEST RESULTS

	Test Number	1	10
Depth	(0-50mm)	2	2
	(50-100mm)	2	2
	(100-150mm)	2	3
	(150-200mm)	3	3
	(200-250mm)	3	3
	(250-300mm)	2	4
	(300-350mm)		
	(350-400mm)		

Comments:
Maximum dry density and solid density used above are from WSP Report NA4803 - NZS 4402:1986 Test 4.1.1 (Standard), and NZS 4402:1986 Test 2.7.1.

Test Methods: NZS 4407:2015, Test Method 4.2, Nuclear moisture-density gauge - direct transmission
Dry density, air-voids, and compaction calculated on NDM-measured wet density and water content, with laboratory-determined maximum dry density and solid density.
Scala penetrometer testing specification NZS 4402:1988 Test 6.5.2

UNIT 9 11 WAKEFIELD STREET P.O. BOX 5011 NAPIER 4145 PHONE 06 843 6996 EMAIL admin@civilservices.co.nz WEBSITE www.civilservices.co.nz

ABA20220988
APPROVED - Site Copy
Hastings District Council
20/09/2022

EARTHWORKS COMPACTION CONTROL TESTING

PROJECT: Stages 1 & 2, Ikanui Subdivision, Hastings - Engineering Fill.
CLIENT: Galbraith Earthmovers Ltd
CONTRACTOR: Galbraith Earthmovers Ltd
TESTED BY: BN/NN
LOCATION: Refer partial site plan and site photo on page 1
LEVEL: ~0.4m Fill
MATERIAL: Sandy Silt
DATE TESTED: 10 November 2021
TIME: 9:30

Report Number: NDM21/247

OVEN-ADJUSTED NUCLEAR DENSITY METER TEST RESULTS

Test Number	1	2	3	4	5	6	7	8	9	10	Mean	Target
Probe Depth (mm)	200	200	200	200	200	200	200	200	200	200		
Wet Density (t/m^3)	1.89	2.01	1.91	1.92	1.97	1.97	1.99	2.02	1.98	1.93	1.96	
Dry Density (t/m^3)	1.65	1.72	1.64	1.67	1.69	1.68	1.70	1.73	1.72	1.67	1.69	
Max. Dry Dens. (t/m^3)	1.68 (Measured)											
Solid Density (t/m^3)	2.64 (Measured)											
Water Cont. (Oven %)	14.8	16.9	16.4	14.8	16.7	17.0	17.5	16.4	14.8	15.6	16.1	
Air Voids (%)	13.2	5.9	10.9	11.8	7.8	7.7	6.0	5.8	9.3	10.5	8.9	<8%
Compaction (%)	98.0	102.1	97.5	99.6	100.4	100.0	101.0	103.2	102.5	99.4	100.4	>95%

OVEN-ADJUSTED NUCLEAR DENSITY METER TEST RESULTS

Test Number	11	12									Mean	Mean (of all)
Probe Depth (mm)	200	200										
Wet Density (t/m^3)	2.02	1.98									2.00	1.96
Dry Density (t/m^3)	1.75	1.71									1.73	1.69
Max. Dry Dens. (t/m^3)	1.68 (Measured)											
Solid Density (t/m^3)	2.64 (Measured)											
Water Cont. (Oven %)	15.4	16.0									15.7	16.0
Air Voids (%)	6.6	7.9									7.3	8.6
Compaction (%)	104.3	101.6									102.9	100.8

Comments:
Maximum dry density and solid density used above are from WSP Report NA 4803 - NZS 4402:1986 Test 4.1.1 (Standard), and NZS 4402:1986 Test 2.7.1.

Test Methods: NZS 4407:2015, Test Method 4.2, Nuclear moisture-density gauge - direct transmission

Dry density, air-voids, and compaction calculated on NDM-measured wet density and oven-dried water content, with laboratory-determined maximum dry density and solid density.

NZS4402:1986 Test 2.1 Determination of the Water Content.

CIVIL SERVICES (HB) LTD
UNIT 9 11 WAKEFIELD STREET P.O. BOX 5011 NAPIER 4145 PHONE 06 843 6996 EMAIL admin@civilservices.co.nz WEBSITE www.civilservices.co.nz

ABA20220988
APPROVED - Site Copy
Hastings District Council
20/09/2022

EARTHWORKS COMPACTION CONTROL TESTING

PROJECT:	Stages 1 & 2, Ikanui Subdivision, Hastings - Engineering Fill.
CLIENT:	Galbraith Earthmovers Ltd
CONTRACTOR:	Galbraith Earthmovers Ltd
ENGINEER:	Initia Ltd
TESTED BY:	NN
LOCATION:	Refer partial site plan and site photo below
LEVEL:	Lots 55-59: 0.4m fill / Lots 60-62: 0.3m fill
MATERIAL:	Sandy Silt, with some gravel
DATE TESTED:	16 November 2021
TIME:	15:00

Report Number: NDM21/250

PARTIAL SITE PLAN and SITE PHOTO, with approximate test locations indicated

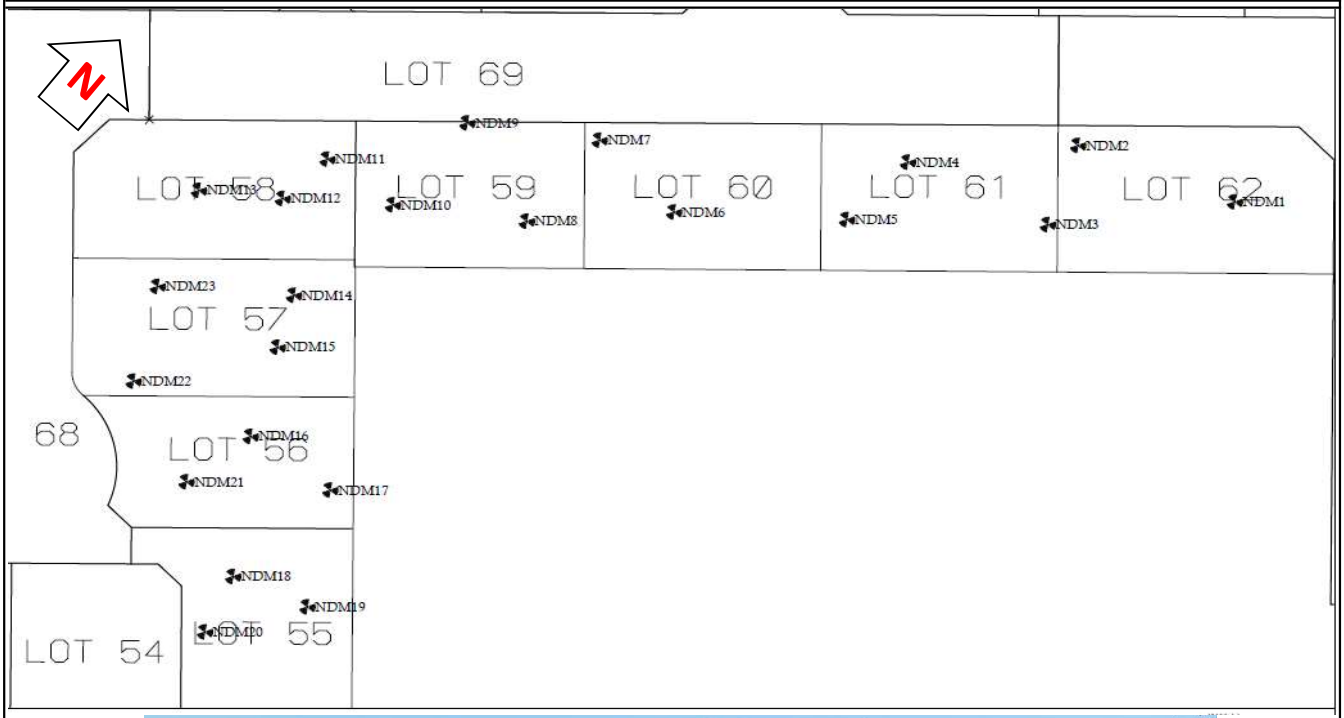



Photo looking approximately north-east

Comments:
The contractor advised placed fill was approximately 400mm thick at lots 55 - 59, and lots 60 - 62 appromixately 300mm thick and performed at finished subgrade level. Results were discussed with the contractor and these were deemed acceptable.

Report written by:	HN	6 December 2021
Report reviewed by:	LE	11 January 2022
Approved for issue:		12 January 2021

Distribution:
1 Galbraith EarthMovers Ltd
2 Civil Services File
3 Initia Ltd
4 Infir Ltd

UNIT 9 11 WAKEFIELD STREET P.O. BOX 5011 NAPIER 4145 PHONE 06 843 6996 EMAIL admin@civilservices.co.nz WEBSITE www.civilservices.co.nz

ABA20220988
APPROVED - Site Copy
Hastings District Council
20/09/2022

EARTHWORKS COMPACTION CONTROL TESTING

PROJECT:	Stages 1 & 2, Ikanui Subdivision, Hastings - Engineering Fill.
CLIENT:	Galbraith Earthmovers Ltd
CONTRACTOR:	Galbraith Earthmovers Ltd
ENGINEER	Initia Ltd
TESTED BY:	NN
LOCATION:	Refer partial site plan and site photo on page 1
LEVEL:	Lots 55-59: 0.4m fill / Lots 60-62: 0.3m fill
MATERIAL:	Sandy Silt, with some gravel
DATE TESTED:	16 November 2021
TIME:	15:00

Report Number: NDM21/250

NUCLEAR DENSITY METER TEST RESULTS

Test Number	1	2	3	4	5	6	7	8	9	10	Mean	Target
Probe Depth (mm)	200	200	200	150	200	200	200	200	200	200		
Wet Density (t/m^3)	2.08	2.06	2.04	2.09	2.11	2.15	2.12	2.14	2.01	2.15	2.10	
Dry Density (t/m^3)	1.88	1.91	1.86	1.92	1.90	1.93	1.93	1.93	1.82	1.95	1.90	
Max. Dry Dens. (t/m^3)	1.91 (Measured)											
Solid Density (t/m^3)	2.64 (Measured)											
Water Cont. (NDM %)	11.0	7.7	9.9	8.8	10.8	11.3	10.3	10.4	10.6	10.3	10.1	
Air Voids (%)	8.2	12.7	11.3	10.1	7.2	4.9	7.1	6.5	11.6	6.1	8.6	<8%
Compaction (%)	98.2	100.1	97.1	100.6	99.6	101.2	100.8	101.3	95.3	101.9	99.6	>95%

NUCLEAR DENSITY METER TEST RESULTS

Test Number	11	12	13	14	15	16	17	18	19	20	Mean	Target
Probe Depth (mm)	200	200	200	200	200	200	200	200	200	200		
Wet Density (t/m^3)	2.06	2.13	2.17	2.09	2.11	2.12	2.13	1.98	2.09	2.08	2.10	
Dry Density (t/m^3)	1.88	1.92	1.95	1.92	1.91	1.94	1.96	1.82	1.91	1.90	1.91	
Max. Dry Dens. (t/m^3)	1.91 (Measured)											
Solid Density (t/m^3)	2.64 (Measured)											
Water Cont. (NDM %)	9.9	10.8	11.1	9.3	10.7	9.0	8.5	9.0	9.6	9.6	9.8	
Air Voids (%)	10.3	6.4	4.3	9.5	7.4	8.8	9.0	14.7	9.2	9.7	8.9	<8%
Compaction (%)	98.3	100.5	102.2	100.3	99.7	101.7	102.5	95.0	99.9	99.4	100.0	>95%

NUCLEAR DENSITY METER TEST RESULTS

Test Number	21	22	23		18A						Mean	Mean (of all)
Probe Depth (mm)	200	200	200		200							
Wet Density (t/m^3)	2.07	2.05	2.10		2.02						2.06	2.09
Dry Density (t/m^3)	1.90	1.86	1.91		1.85						1.88	1.90
Max. Dry Dens. (t/m^3)	1.91 (Measured)											
Solid Density (t/m^3)	2.64 (Measured)											
Water Cont. (NDM %)	8.7	10.4	10.3		8.9						9.6	9.9
Air Voids (%)	11.2	10.1	8.1		13.2						10.7	9.1
Compaction (%)	99.6	97.4	99.8		97.1						98.5	99.6

Comments:
Maximum dry density and solid density used above are from WSP Report NA4803 - NZS 4402:1986 Test 4.1.1 (Standard), and NZS 4402:1986 Test 2.7.1.

Test Methods: NZS 4407:2015, Test Method 4.2, Nuclear moisture-density gauge - direct transmission
Dry density, air-voids, and compaction calculated on NDM-measured wet density and water content, with laboratory-determined maximum dry density and solid density.

CIVIL SERVICES (HB) LTD
UNIT 9 11 WAKEFIELD STREET P.O. BOX 5011 NAPIER 4145 PHONE 06 843 6996 EMAIL admin@civilservices.co.nz WEBSITE www.civilservices.co.nz

ABA20220988
APPROVED - Site Copy
Hastings District Council
20/09/2022

EARTHWORKS COMPACTION CONTROL TESTING

PROJECT: Stages 1 & 2, Ikanui Subdivision, Hastings - Engineering Fill.
CLIENT: Galbraith Earthmovers Ltd
CONTRACTOR: Galbraith Earthmovers Ltd
TESTED BY: NN
LOCATION: Refer partial site plan and site photo on page 1
LEVEL: Lots 55-59: 0.4m fill / Lots 60-62: 0.3m fill
MATERIAL: Sandy Silt, with some gravel
DATE TESTED: 16 November 2021
TIME: 15:00

Report Number: NDM21/250
Page: 3 of 3

CIVIL SERVICES (HB) LTD
UNIT 9 11 WAKEFIELD STREET P.O. BOX 5011 NAPIER 4145 PHONE 06 843 6996 EMAIL admin@civilservices.co.nz WEBSITE www.civilservices.co.nz

OVEN-ADJUSTED NUCLEAR DENSITY METER TEST RESULTS

Test Number	1	2	3	4	5	6	7	8	9	10	Mean	Target
Probe Depth (mm)	200	200	200	150	200	200	200	200	200	200		
Wet Density (t/m^3)	2.08	2.06	2.04	2.09	2.11	2.15	2.12	2.14	2.01	2.15	2.10	
Dry Density (t/m^3)	1.84	1.90	1.84	1.91	1.89	1.94	1.93	1.92	1.82	1.91	1.89	
Max. Dry Dens. (t/m^3)	1.91 (Measured)											
Solid Density (t/m^3)	2.64 (Measured)											
Water Cont. (Oven %)	13.1	8.6	10.6	9.6	11.8	10.6	9.8	11.2	10.6	12.5	10.8	
Air Voids (%)	6.1	11.8	10.6	9.2	6.2	5.6	7.6	5.6	11.7	3.7	7.8	<8%
Compaction (%)	96.4	99.3	96.5	99.9	98.7	101.7	101.3	100.5	95.4	99.9	99.0	>95%

OVEN-ADJUSTED NUCLEAR DENSITY METER TEST RESULTS

Test Number	11	12	13	14	15	16	17	18	19	20	Mean	Target
Probe Depth (mm)	200	200	200	200	200	200	200	200	200	200		
Wet Density (t/m^3)	2.06	2.13	2.17	2.09	2.11	2.12	2.13	1.98	2.09	2.08	2.10	
Dry Density (t/m^3)	1.88	1.87	1.91	1.83	1.89	1.91	1.95	1.75	1.84	1.84	1.87	
Max. Dry Dens. (t/m^3)	1.91 (Measured)											
Solid Density (t/m^3)	2.64 (Measured)											
Water Cont. (Oven %)	9.8	13.5	13.7	14.4	11.3	10.8	8.9	13.4	13.4	12.9	12.2	
Air Voids (%)	10.3	3.6	1.6	4.2	6.7	6.9	8.6	10.4	5.3	6.3	6.4	<8%
Compaction (%)	98.3	98.1	99.9	95.8	99.1	100.0	102.2	91.4	96.6	96.6	97.8	>95%

OVEN-ADJUSTED NUCLEAR DENSITY METER TEST RESULTS

Test Number	21	22	23	18A	Mean	Mean (of all)
Probe Depth (mm)	200	200	200	200		
Wet Density (t/m^3)	2.07	2.05	2.10	2.02	2.06	2.09
Dry Density (t/m^3)	1.86	1.80	1.86	1.84	1.84	1.87
Max. Dry Dens. (t/m^3)	1.91 (Measured)					
Solid Density (t/m^3)	2.64 (Measured)					
Water Cont. (Oven %)	11.1	14.0	13.1	9.9	12.0	11.6
Air Voids (%)	8.7	6.4	5.1	12.1	8.1	7.3
Compaction (%)	97.5	94.3	97.3	96.2	96.3	98.0

Comments:
Maximum dry density and solid density used above are from WSP Report NA 4803 - NZS 4402:1986 Test 4.1.1 (Standard), and NZS 4402:1986 Test 2.7.1.

Test Methods: NZS 4407:2015, Test Method 4.2, Nuclear moisture-density gauge - direct transmission

Dry density, air-voids, and compaction calculated on NDM-measured wet density and oven-dried water content, with laboratory-determined maximum dry density and solid density.

NZS4402:1986 Test 2.1 Determination of the Water Content.

ABA20220988
APPROVED - Site Copy
Hastings District Council
20/09/2022

EARTHWORKS COMPACTION CONTROL TESTING

PROJECT:	Stage 2, Ikanui Subdivision, Hastings - Engineering Fill.
CLIENT:	Galbraith Earthmovers Ltd
CONTRACTOR:	Galbraith Earthmovers Ltd
ENGINEER:	Initia Ltd
TESTED BY:	BN/JCG/NN
LOCATION:	Refer partial site plan and site photo below
LEVEL:	Finished subgrade level, Lots 54-58
MATERIAL:	Sandy Silt, with some gravel
DATE TESTED:	24 November 2021
TIME:	22:00

Report Number: NDM21/263

PARTIAL SITE PLAN and SITE PHOTO, with approximate test locations indicated

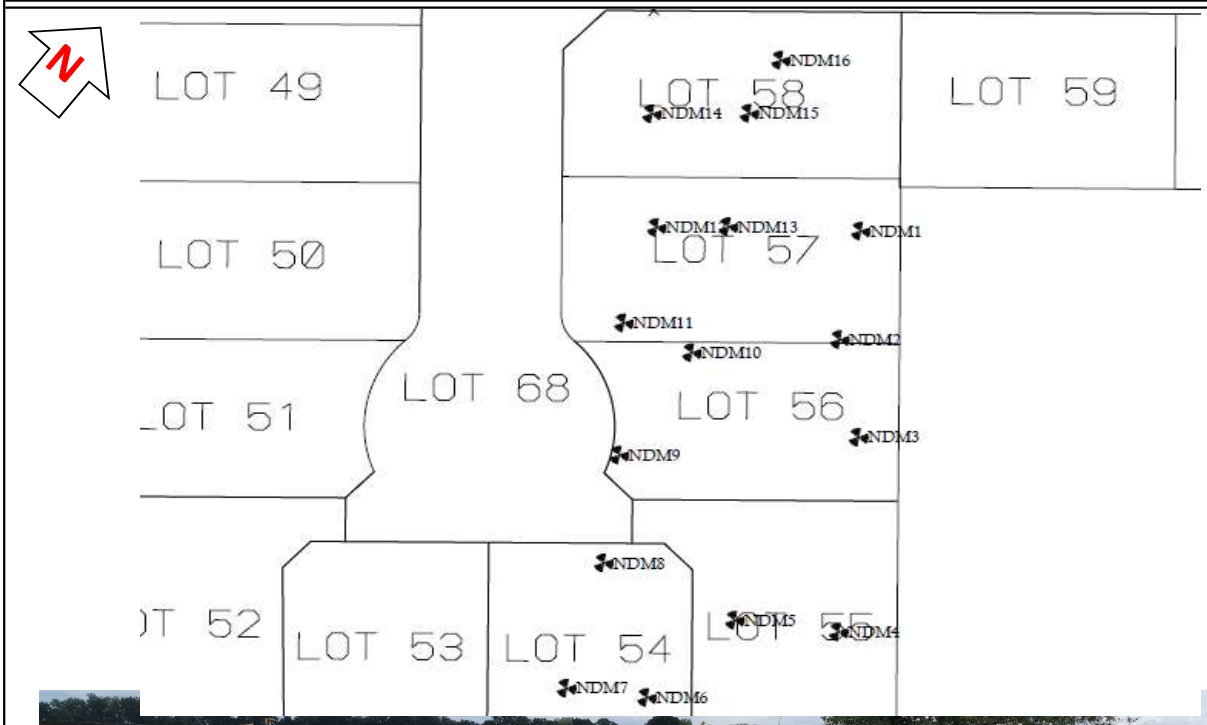

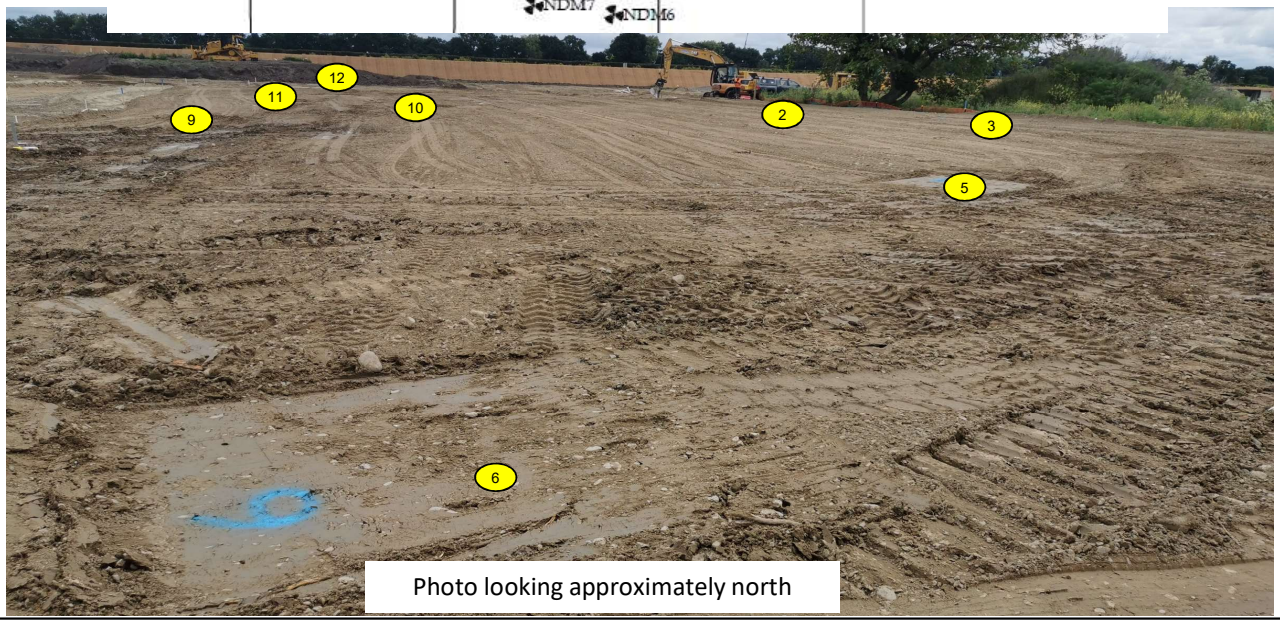

Photo looking approximately north

Comments:
The contractor was advised that results were acceptable. Testing was undertaken on the finished subgrade level.

Report written by:	HN	13 December 2021
Report reviewed by:	LE	11 January 2022
Approved for issue:		12 January 2022

Distribution:
1 Galbraith EarthMovers Ltd
2 Civil Services File
3 Initia Ltd
4 Infir Ltd

CIVIL SERVICES (HB) LTD
UNIT 9 11 WAKEFIELD STREET P.O. BOX 5011 NAPIER 4145 PHONE 06 843 6996 EMAIL admin@civilservices.co.nz WEBSITE www.civilservices.co.nz

ABA20220988
APPROVED - Site Copy
Hastings District Council
20/09/2022

EARTHWORKS COMPACTION CONTROL TESTING

PROJECT: Stage 2, Ikanui Subdivision, Hastings - Engineering Fill.
CLIENT: Galbraith Earthmovers Ltd
CONTRACTOR: Galbraith Earthmovers Ltd
ENGINEER Initia Ltd
TESTED BY: BN/JCG/NN
LOCATION: Refer partial site plan and site photo on page 1
LEVEL: Finished subgrade level, Lots 54-58
MATERIAL: Sandy Silt, with some gravel
DATE TESTED: 24 November 2021
TIME: 22:00

Report Number: NDM21/263

NUCLEAR DENSITY METER TEST RESULTS

Test Number	1	2	3	4	5	6	7	8	9	10	Mean	Target
Probe Depth (mm)	300	300	300	300	300	300	300	300	300	300		
Wet Density (t/m^3)	2.19	2.19	2.07	2.14	2.21	2.13	2.16	2.17	2.18	2.03	2.15	
Dry Density (t/m^3)	2.02	1.96	1.90	1.94	2.01	1.93	1.98	1.99	1.95	1.82	1.95	
Max. Dry Dens. (t/m^3)	1.91 (Measured)											
Solid Density (t/m^3)	2.64 (Measured)											
Water Cont. (NDM %)	8.6	11.9	9.3	10.4	10.1	10.3	9.0	9.0	11.6	11.9	10.2	
Air Voids (%)	6.1	2.6	10.4	6.5	3.6	7.0	7.2	6.8	3.4	9.5	6.3	<8%
Compaction (%)	105.6	102.4	99.3	101.3	105.1	101.0	103.6	104.1	102.0	95.1	101.9	>95%

NUCLEAR DENSITY METER TEST RESULTS

Test Number	11	12	13	14	15	16	Mean	Mean (of all)
Probe Depth (mm)	300	300	300	300	300	300		
Wet Density (t/m^3)	2.07	2.02	2.05	2.10	2.02	2.14	2.07	2.12
Dry Density (t/m^3)	1.90	1.82	1.88	1.93	1.82	1.95	1.88	1.92
Max. Dry Dens. (t/m^3)	1.91 (Measured)							
Solid Density (t/m^3)	2.64 (Measured)							
Water Cont. (NDM %)	9.0	10.6	9.0	9.1	11.1	9.8	9.8	10.0
Air Voids (%)	11.0	11.5	11.7	9.3	10.7	6.9	10.2	7.8
Compaction (%)	99.2	95.5	98.4	100.8	95.3	102.1	98.6	100.7

PENETROMETER TEST RESULTS

	Test Number	3	11	12	13	15
Depth	(0-50mm)	2	2	2	2	2
	(50-100mm)	2	2	2	3	2
	(100-150mm)	3	2	3	4	2
	(150-200mm)	5	5	3	5	2
	(200-250mm)	4	8	4	6	3
	(250-300mm)	6	8	10+	6	6
	(300-350mm)	7	8		10+	7
	(350-400mm)	7	10+			8

Comments:
Maximum dry density and solid density used above are from WSP Report NA4803 - NZS 4402:1986 Test 4.1.1 (Standard), and NZS 4402:1986 Test 2.7.1.

Test Methods: NZS 4407:2015, Test Method 4.2, Nuclear moisture-density gauge - direct transmission
Dry density, air-voids, and compaction calculated on NDM-measured wet density and water content, with laboratory-determined maximum dry density and solid density.
Scala penetrometer testing specification NZS 4402:1988 Test 6.5.2

CIVIL SERVICES (HB) LTD
UNIT 9 11 WAKEFIELD STREET P.O. BOX 5011 NAPIER 4145 PHONE 06 843 6996 EMAIL admin@civilservices.co.nz WEBSITE www.civilservices.co.nz

ABA20220988
APPROVED - Site Copy
Hastings District Council
20/09/2022

EARTHWORKS COMPACTION CONTROL TESTING

PROJECT: Stage 2, Ikanui Subdivision, Hastings - Engineering Fill.
CLIENT: Galbraith Earthmovers Ltd
CONTRACTOR: Galbraith Earthmovers Ltd
TESTED BY: BN/JCG/NN
LOCATION: Refer partial site plan and site photo on page 1
LEVEL: Finished subgrade level, Lots 54-58
MATERIAL: Sandy Silt, with some gravel
DATE TESTED: 24 November 2021
TIME: 22:00

Report Number: NDM21/263

OVEN-ADJUSTED NUCLEAR DENSITY METER TEST RESULTS

Test Number	1	2	3	4	5	6	7	8	9	10	Mean	Target
Probe Depth (mm)	300	300	300	300	300	300	300	300	300	300		
Wet Density (t/m^3)	2.19	2.19	2.07	2.14	2.21	2.13	2.16	2.17	2.18	2.03	2.15	
Dry Density (t/m^3)	2.00	1.94	1.89	1.93	2.00	1.91	1.96	2.00	1.96	1.85	1.94	
Max. Dry Dens. (t/m^3)	1.91 (Measured)											
Solid Density (t/m^3)	2.64 (Measured)											
Water Cont. (Oven %)	9.7	12.5	9.8	10.8	10.6	11.5	10.0	8.4	11.1	9.8	10.4	
Air Voids (%)	4.8	1.9	9.9	6.1	3.0	5.6	6.0	7.4	4.0	11.7	6.0	<8%
Compaction (%)	104.5	101.8	98.9	101.0	104.6	99.9	102.6	104.6	102.5	96.9	101.7	>95%

OVEN-ADJUSTED NUCLEAR DENSITY METER TEST RESULTS

Test Number	11	12	13	14	15	16					Mean	Mean (of all)
Probe Depth (mm)	300	300	300	300	300	300						
Wet Density (t/m^3)	2.07	2.02	2.05	2.10	2.02	2.14					2.07	2.12
Dry Density (t/m^3)	1.88	1.82	1.87	1.90	1.82	1.92					1.87	1.92
Max. Dry Dens. (t/m^3)	1.91 (Measured)											
Solid Density (t/m^3)	2.64 (Measured)											
Water Cont. (Oven %)	10.1	10.7	9.3	10.7	11.3	11.3					10.6	10.5
Air Voids (%)	9.8	11.3	11.4	7.6	10.5	5.2					9.3	7.3
Compaction (%)	98.2	95.4	98.1	99.4	95.2	100.7					97.8	100.3

Comments:
Maximum dry density and solid density used above are from WSP Report NA 4803 - NZS 4402:1986 Test 4.1.1 (Standard), and NZS 4402:1986 Test 2.7.1.

Test Methods: NZS 4407:2015, Test Method 4.2, Nuclear moisture-density gauge - direct transmission

Dry density, air-voids, and compaction calculated on NDM-measured wet density and oven-dried water content, with laboratory-determined maximum dry density and solid density.

NZS4402:1986 Test 2.1 Determination of the Water Content.

CIVIL SERVICES (HB) LTD
UNIT 9 11 WAKEFIELD STREET P.O. BOX 5011 NAPIER 4145 PHONE 06 843 6996 EMAIL admin@civilservices.co.nz WEBSITE www.civilservices.co.nz

ABA20220988
APPROVED - Site Copy
Hastings District Council
20/09/2022

EARTHWORKS COMPACTION CONTROL TESTING

PROJECT:	Stage 2, Ikanui Subdivision, Hastings - Engineering Fill.
CLIENT:	Galbraith Earthmovers Ltd
CONTRACTOR:	Galbraith Earthmovers Ltd
ENGINEER:	Initia Ltd
TESTED BY:	LE/NG
LOCATION:	Refer partial site plan below
LEVEL:	Finished subgrade level, Lots 50 - 53
MATERIAL:	Sandy Silt, with some gravel
DATE TESTED:	29 November 2021
TIME:	12:00

Report Number: NDM21/266
Page: 1 of 2

PARTIAL SITE PLAN, with approximate test locations indicated

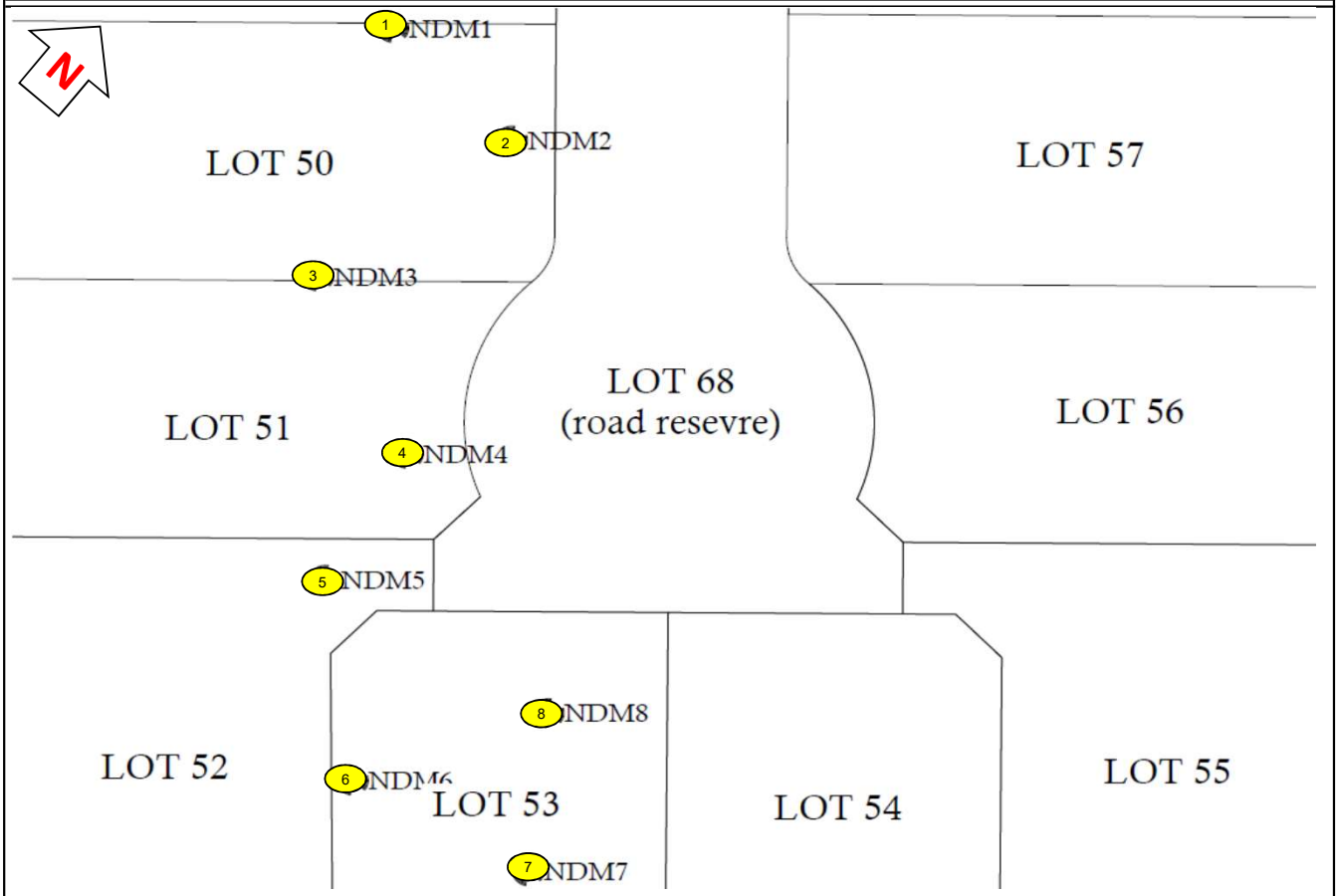

No photo available

Comments:
The contractor was advised that results were acceptable. Test locations 1 and 2 were advised by the Contractor to have limited fill depth and initial results likely reflected the natural ground underneath, Civil Services technician proceeded to undertake backscatter test mode of the nuclear density machine to determine the comapction in the top 100mm of the placed fill. No oven-moisture data available for this report.

Report written by:	HN	14 December 2021
Report reviewed by:	LE	11 January 2022
Approved for issue:		12 January 2022

Distribution:
1 Galbraith EarthMovers Ltd
2 Civil Services File
3 Initia Ltd
4 Infir Ltd

UNIT 9 11 WAKEFIELD STREET P.O. BOX 5011 NAPIER 4145 PHONE 06 843 6996 EMAIL admin@civilservices.co.nz WEBSITE www.civilservices.co.nz

ABA20220988
APPROVED - Site Copy
Hastings District Council
20/09/2022

EARTHWORKS COMPACTION CONTROL TESTING

PROJECT:	Stage 2, Ikanui Subdivision, Hastings - Engineering Fill.
CLIENT:	Galbraith Earthmovers Ltd
CONTRACTOR:	Galbraith Earthmovers Ltd
ENGINEER	Initia Ltd
TESTED BY:	LE/NG
LOCATION:	Refer partial site plan on page 1
LEVEL:	Finished subgrade level, Lots 50 - 53
MATERIAL:	Sandy Silt, with some gravel
DATE TESTED:	29 November 2021
TIME:	12:00

Report Number: NDM21/266
Page: 2 of 2

NUCLEAR DENSITY METER TEST RESULTS

Test Number	1	2	3	4	5	6	7	8	Mean	Target
Probe Depth (mm)	200	200	200	200	200	200	200	200		
Wet Density (t/m^3)	2.02	1.98	2.17	2.17	2.13	2.16	2.11	2.11	2.11	
Dry Density (t/m^3)	1.79	1.76	1.93	1.96	1.93	1.95	1.91	1.93	1.89	
Max. Dry Dens. (t/m^3)	1.91 (Measured)									
Solid Density (t/m^3)	2.64 (Measured)									
Water Cont. (NDM %)	12.8	12.2	12.5	10.5	10.6	10.7	10.5	9.8	11.2	
Air Voids (%)	9.3	11.7	2.6	4.9	6.3	5.2	7.7	8.2	7.0	<8%
Compaction (%)	93.5	92.3	101.2	102.8	101.0	102.0	99.7	100.8	99.2	>95%

NUCLEAR DENSITY METER TEST RESULTS

Test Number	1a	2a							Mean	Mean (of all)
Probe Depth (mm)	BS	BS								
Wet Density (t/m^3)	2.05	2.15							2.10	2.10
Dry Density (t/m^3)	1.83	1.94							1.88	1.89
Max. Dry Dens. (t/m^3)	1.91 (Measured)									
Solid Density (t/m^3)	2.64 (Measured)									
Water Cont. (NDM %)	12.5	10.7							11.6	11.3
Air Voids (%)	7.9	5.6							6.7	6.9
Compaction (%)	95.5	101.7							98.6	99.0

Comments:
Maximum dry density and solid density used above are from WSP Report NA4803 - NZS 4402:1986 Test 4.1.1 (Standard), and NZS 4402:1986 Test 2.7.1.

Test Methods: NZS 4407:2015, Test Method 4.3, Nuclear moisture-density gauge - Backscatter mode
NZS 4407:2015, Test Method 4.2, Nuclear moisture-density gauge - direct transmission
Dry density, air-voids, and compaction calculated on NDM-measured wet density and water content, with laboratory-determined maximum dry density and solid density.

CIVIL SERVICES (HB) LTD
UNIT 9 11 WAKEFIELD STREET P.O. BOX 5011 NAPIER 4145 PHONE 06 843 6996 EMAIL admin@civilservices.co.nz WEBSITE www.civilservices.co.nz

ABA20220988
APPROVED - Site Copy
Hastings District Council
20/09/2022

EARTHWORKS COMPACTION CONTROL TESTING

PROJECT:	Stage 2, Ikanui Subdivision - Hastings - Engineering Fill.
CLIENT:	Galbraith Earthmovers Ltd
CONTRACTOR:	Galbraith Earthmovers Ltd
ENGINEER:	Initia Ltd
TESTED BY:	LE/JCG
LOCATION:	Refer partial site plan below
LEVEL:	Finished subgrade level, Lots 22 -24, 39 & 40
MATERIAL:	Sandy Silt, with some gravel
DATE TESTED:	7 December 2021
TIME:	10:00

Report Number: NDM21/267
Page: 1 of 3

PARTIAL SITE PLAN and SITE PHOTO, with approximate test locations indicated

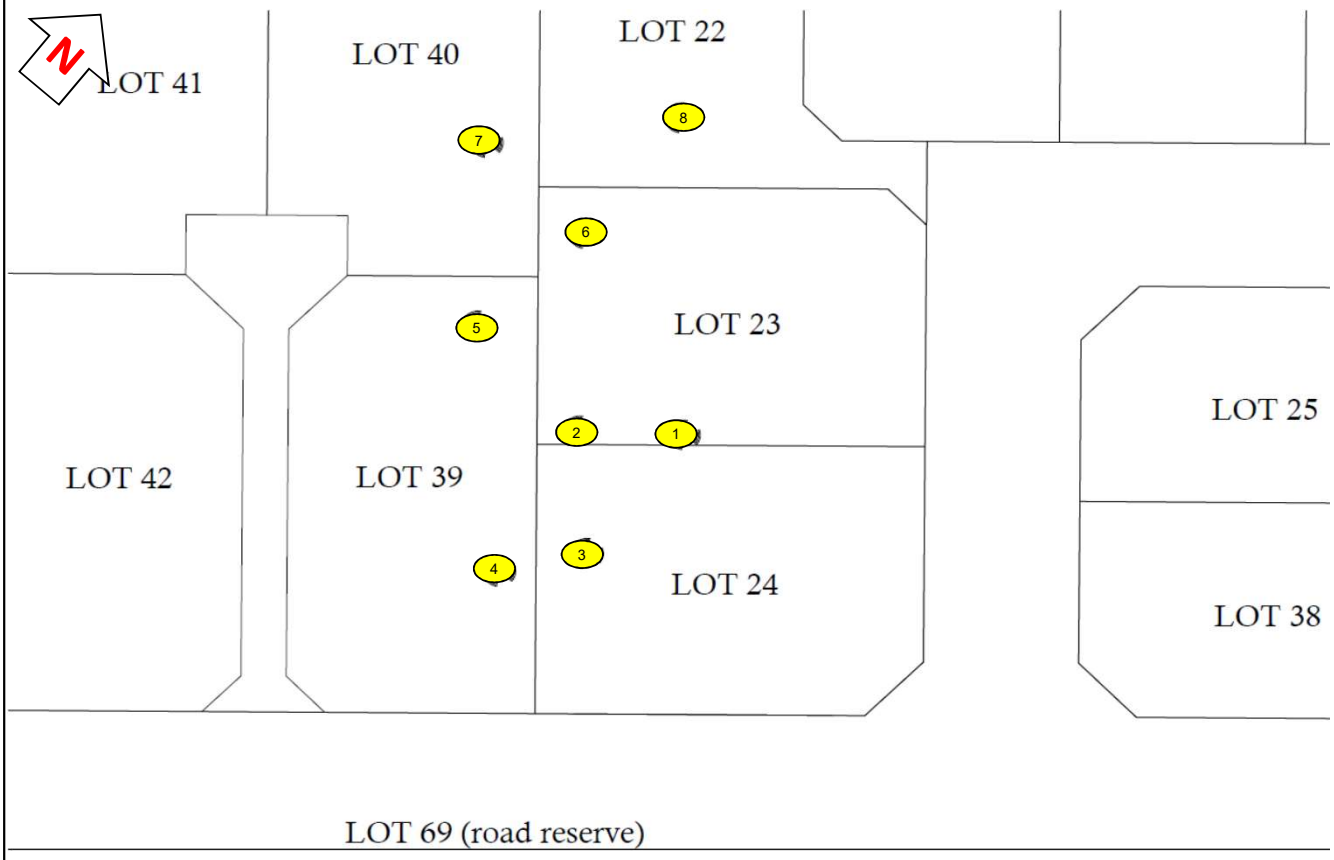

No photo available

Comments:
The contractor was advised that results were acceptable.

Report written by:	HN	14 December 2021
Report reviewed by:	LE	11 January 2022
Approved for issue:		12 January 2022

Distribution:
1 Galbraith EarthMovers Ltd
2 Civil Services File
3 Initia Ltd
4 Infir Ltd

UNIT 9 11 WAKEFIELD STREET P.O. BOX 5011 NAPIER 4145 PHONE 06 843 6996 EMAIL admin@civilservices.co.nz WEBSITE www.civilservices.co.nz

ABA20220988
APPROVED - Site Copy
Hastings District Council
20/09/2022

EARTHWORKS COMPACTION CONTROL TESTING

PROJECT:	Stage 2, Ikanui Subdivision, Hastings - Engineering Fill.
CLIENT:	Galbraith Earthmovers Ltd
CONTRACTOR:	Galbraith Earthmovers Ltd
ENGINEER	Initia Ltd
TESTED BY:	LE/JCG
LOCATION:	Refer partial site plan on page 1
LEVEL:	Finished subgrade level, Lots 22 -24, 39 & 40
MATERIAL:	Sandy Silt, with some gravel
DATE TESTED:	7 December 2021
TIME:	10:00

Report Number: NDM21/267

NUCLEAR DENSITY METER TEST RESULTS

Test Number	1	2	3	4	5	6	7	8	9	Mean	Target
Probe Depth (mm)	300	300	300	300	300	300	300	300	300		
Wet Density (t/m^3)	2.09	2.16	2.15	2.18	2.15	2.15	2.18	2.09	2.08	2.14	
Dry Density (t/m^3)	1.83	1.92	1.88	1.93	1.91	1.90	1.94	1.95	1.92	1.91	
Max. Dry Dens. (t/m^3)	1.91 (Measured)										
Solid Density (t/m^3)	2.64 (Measured)										
Water Cont. (NDM %)	14.0	12.5	14.2	13.1	12.7	12.8	12.2	7.5	8.5	12.0	
Air Voids (%)	4.8	3.2	1.7	1.6	3.3	3.4	2.8	11.6	10.9	4.8	<8%
Compaction (%)	95.9	100.5	98.6	101.0	99.9	99.6	101.5	101.8	100.5	99.9	>95%

Comments:
Maximum dry density and solid density used above are from WSP Report NA4803 - NZS 4402:1986 Test 4.1.1 (Standard), and NZS 4402:1986 Test 2.7.1.

Test Methods: NZS 4407:2015, Test Method 4.2, Nuclear moisture-density gauge - direct transmission
Dry density, air-voids, and compaction calculated on NDM-measured wet density and water content, with laboratory-determined maximum dry density and solid density.

CIVIL SERVICES (HB) LTD
UNIT 9 11 WAKEFIELD STREET P.O. BOX 5011 NAPIER 4145 PHONE 06 843 6996 EMAIL admin@civilservices.co.nz WEBSITE www.civilservices.co.nz

ABA20220988
APPROVED - Site Copy
Hastings District Council
20/09/2022

EARTHWORKS COMPACTION CONTROL TESTING

PROJECT: Stage 2, Ikanui Subdivision, Hastings - Engineering Fill.
CLIENT: Galbraith Earthmovers Ltd
CONTRACTOR: Galbraith Earthmovers Ltd
TESTED BY: LE/JCG
LOCATION: Refer partial site plan on page 1
LEVEL: Finished subgrade level, Lots 22 -24, 39 & 40
MATERIAL: Sandy Silt, with some gravel
DATE TESTED: 7 December 2021
TIME: 10:00

Report Number: NDM21/267

OVEN-ADJUSTED NUCLEAR DENSITY METER TEST RESULTS

Test Number	1	2	3	4	5	6	7	8	9	Mean	Target
Probe Depth (mm)	300	300	300	300	300	300	300	300	300		
Wet Density (t/m^3)	2.09	2.16	2.15	2.18	2.15	2.15	2.18	2.09	2.08	2.14	
Dry Density (t/m^3)	1.81	1.95	1.88	1.94	1.92	1.96	1.93	1.83	1.90	1.90	
Max. Dry Dens. (t/m^3)	1.91 (Measured)										
Solid Density (t/m^3)	2.64 (Measured)										
Water Cont. (Oven %)	15.7	10.8	14.7	12.4	12.0	9.7	12.4	14.2	9.7	12.4	
Air Voids (%)	3.1	5.0	1.3	2.2	4.1	6.8	2.6	4.5	9.6	4.4	<8%
Compaction (%)	94.5	102.0	98.2	101.6	100.6	102.4	101.3	95.8	99.4	99.5	>95%

Comments:
Maximum dry density and solid density used above are from WSP Report NA 4803 - NZS 4402:1986 Test 4.1.1 (Standard), and NZS 4402:1986 Test 2.7.1.

Test Methods: NZS 4407:2015, Test Method 4.2, Nuclear moisture-density gauge - direct transmission

Dry density, air-voids, and compaction calculated on NDM-measured wet density and oven-dried water content, with laboratory-determined maximum dry density and solid density.

NZS4402:1986 Test 2.1 Determination of the Water Content.

CIVIL SERVICES (HB) LTD
UNIT 9 11 WAKEFIELD STREET P.O. BOX 5011 NAPIER 4145 PHONE 06 843 6996 EMAIL admin@civilservices.co.nz WEBSITE www.civilservices.co.nz

ABA20220988
APPROVED - Site Copy
Hastings District Council
20/09/2022

EARTHWORKS COMPACTION CONTROL TESTING

PROJECT:	Stage 2, Ikanui Subdivision, Hastings - Engineering Fill
CLIENT:	Galbraith Earthmovers Ltd
CONTRACTOR:	Galbraith Earthmovers Ltd
ENGINEER:	Initia Ltd
TESTED BY:	HN
LOCATION:	Refer partial site plan and site photo below
LEVEL:	Finished subgrade level, Lots 20-22
MATERIAL:	Sandy Silt, with some gravel
DATE TESTED:	9 December 2021
TIME:	11:00

Report Number: NDM21/268
Page: 1 of 3

PARTIAL SITE PLAN and SITE PHOTO, with approximate test locations indicated

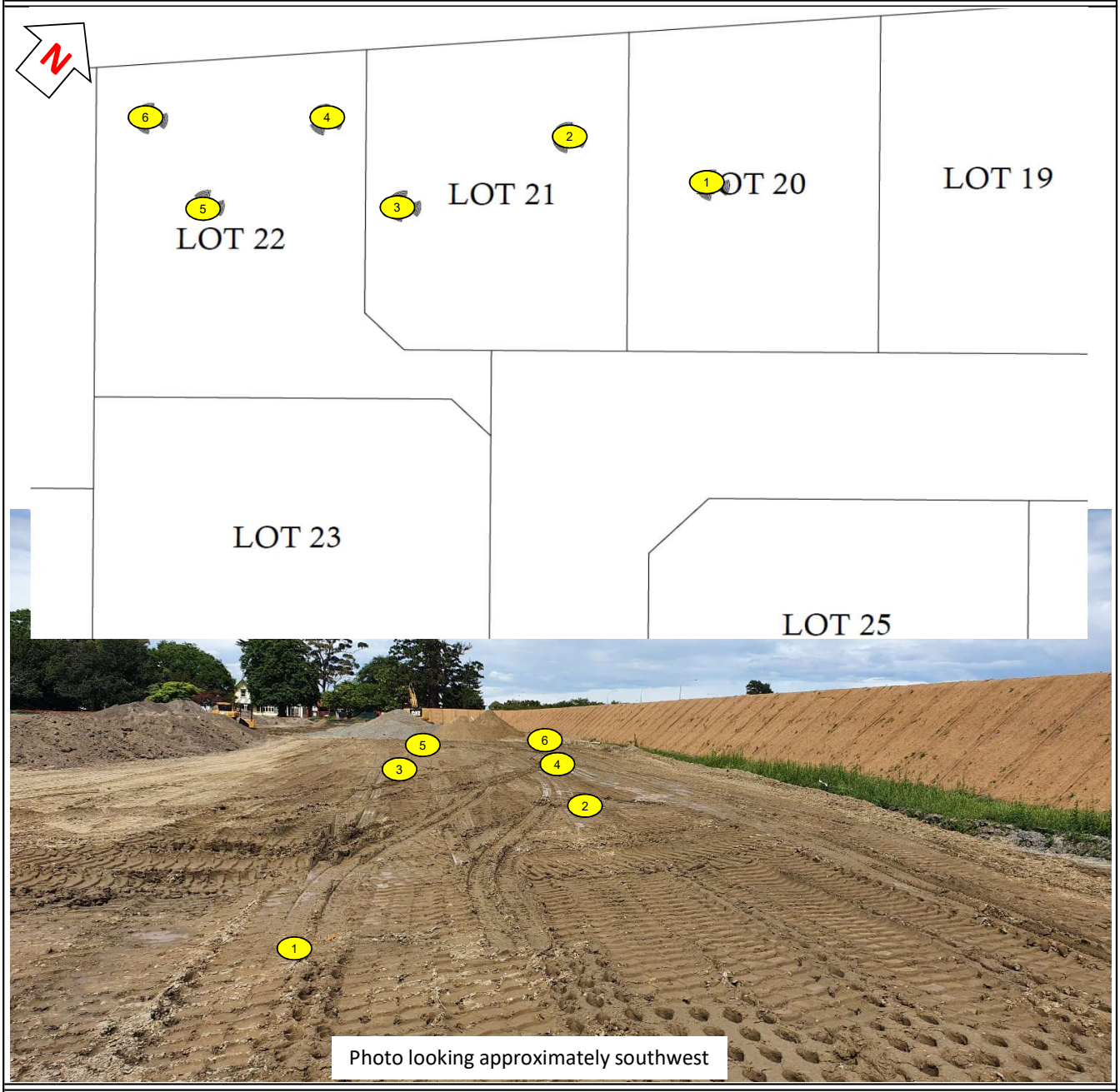

Comments:
Contractor advised lots had been filled to finished level the day prior to testing (8 Dec 2021).

Report written by:	HN	13 December 2021
Report reviewed by:	LE	11 January 2022
Approved for issue:		12 January 2022

Distribution:
1 Galbraith EarthMovers Ltd
2 Civil Services File
3 Initia Ltd
4 Infir Ltd

UNIT 9 11 WAKEFIELD STREET P.O. BOX 5011 NAPIER 4145 PHONE 06 843 6996 EMAIL admin@civilservices.co.nz WEBSITE www.civilservices.co.nz

ABA20220988
APPROVED - Site Copy
Hastings District Council
20/09/2022

EARTHWORKS COMPACTION CONTROL TESTING

PROJECT:	Stage 2, Ikanui Subdivision, Hastings - Engineering Fill
CLIENT:	Galbraith Earthmovers Ltd
CONTRACTOR:	Galbraith Earthmovers Ltd
ENGINEER	Initia Ltd
TESTED BY:	HN
LOCATION:	Refer partial site plan and site photo on page 1
LEVEL:	Finished subgrade level, Lots 20-22
MATERIAL:	Sandy Silt, with some gravel
DATE TESTED:	9 December 2021
TIME:	11:00

Report Number: NDM21/268

NUCLEAR DENSITY METER TEST RESULTS

Test Number	1	2	3	4	5	6	Mean	Target
Probe Depth (mm)	300	300	300	300	300	300		
Wet Density (t/m^3)	2.14	2.13	2.08	2.10	2.09	2.07	2.10	
Dry Density (t/m^3)	1.88	1.91	1.89	1.93	1.90	1.85	1.90	
Max. Dry Dens. (t/m^3)	1.91 (Measured)							
Solid Density (t/m^3)	2.64 (Measured)							
Water Cont. (NDM %)	13.4	11.7	9.9	8.9	9.6	11.8	10.9	
Air Voids (%)	3.2	5.3	9.4	9.7	9.5	7.9	7.5	<8%
Compaction (%)	98.6	99.9	99.1	101.0	99.6	97.0	99.2	>95%

Comments:
Maximum dry density and solid density used above are from WSP Report NA4803 - NZS 4402:1986 Test 4.1.1 (Standard), and NZS 4402:1986 Test 2.7.1.

Test Methods: NZS 4407:2015, Test Method 4.2, Nuclear moisture-density gauge - direct transmission
Dry density, air-voids, and compaction calculated on NDM-measured wet density and water content, with laboratory-determined maximum dry density and solid density.

CIVIL SERVICES (HB) LTD
UNIT 9 11 WAKEFIELD STREET P.O. BOX 5011 NAPIER 4145 PHONE 06 843 6996 EMAIL admin@civilservices.co.nz WEBSITE www.civilservices.co.nz

ABA20220988
APPROVED - Site Copy
Hastings District Council
20/09/2022

EARTHWORKS COMPACTION CONTROL TESTING

PROJECT: Stage 2, Ikanui Subdivision, Hastings - Engineering Fill
CLIENT: Galbraith Earthmovers Ltd
CONTRACTOR: Galbraith Earthmovers Ltd
TESTED BY: HN
LOCATION: Refer partial site plan and site photo on page 1
LEVEL: Finished subgrade level, Lots 20-22
MATERIAL: Sandy Silt, with some gravel
DATE TESTED: 9 December 2021
TIME: 11:00

Report Number: NDM21/268
Page: 3 of 3

OVEN-ADJUSTED NUCLEAR DENSITY METER TEST RESULTS

Test Number	1	2	3	4	5	6	Mean	Target
Probe Depth (mm)	300	300	300	300	300	300		
Wet Density (t/m^3)	2.14	2.13	2.08	2.10	2.09	2.07	2.10	
Dry Density (t/m^3)	1.89	1.89	1.87	1.89	1.87	1.81	1.87	
Max. Dry Dens. (t/m^3)	1.91 (Measured)							
Solid Density (t/m^3)	2.64 (Measured)							
Water Cont. (Oven %)	13.0	13.0	11.0	11.0	11.3	14.6	12.3	
Air Voids (%)	3.7	3.9	8.2	7.4	7.8	5.1	6.0	<8%
Compaction (%)	99.0	98.8	98.1	99.0	98.2	94.6	98.0	>95%

Comments:
Maximum dry density and solid density used above are from WSP Report NA 4803 - NZS 4402:1986 Test 4.1.1 (Standard), and NZS 4402:1986 Test 2.7.1.

Test Methods: NZS 4407:2015, Test Method 4.2, Nuclear moisture-density gauge - direct transmission

Dry density, air-voids, and compaction calculated on NDM-measured wet density and oven-dried water content, with laboratory-determined maximum dry density and solid density.

NZS4402:1986 Test 2.1 Determination of the Water Content.

CIVIL SERVICES (HB) LTD
UNIT 9 11 WAKEFIELD STREET P.O. BOX 5011 NAPIER 4145 PHONE 06 843 6996 EMAIL admin@civilservices.co.nz WEBSITE www.civilservices.co.nz

ABA20220988
APPROVED - Site Copy
Hastings District Council
20/09/2022

EARTHWORKS COMPACTION CONTROL TESTING

PROJECT:	Stage 2, Ikanui Subdivision, Hastings - Engineering Fill
CLIENT:	Galbraith Earthmovers Ltd
CONTRACTOR:	Galbraith Earthmovers Ltd
ENGINEER:	Initia Ltd
TESTED BY:	HN/BN
LOCATION:	Refer partial site plan and site photo below
LEVEL:	Finished subgrade level, Lots 41, 44-46
MATERIAL:	Sandy Silt, with some gravel
DATE TESTED:	10 December 2021
TIME:	10:00

Report Number: NDM21/269
Page: 1 of 3

PARTIAL SITE PLAN and SITE PHOTO, with approximate test locations indicated

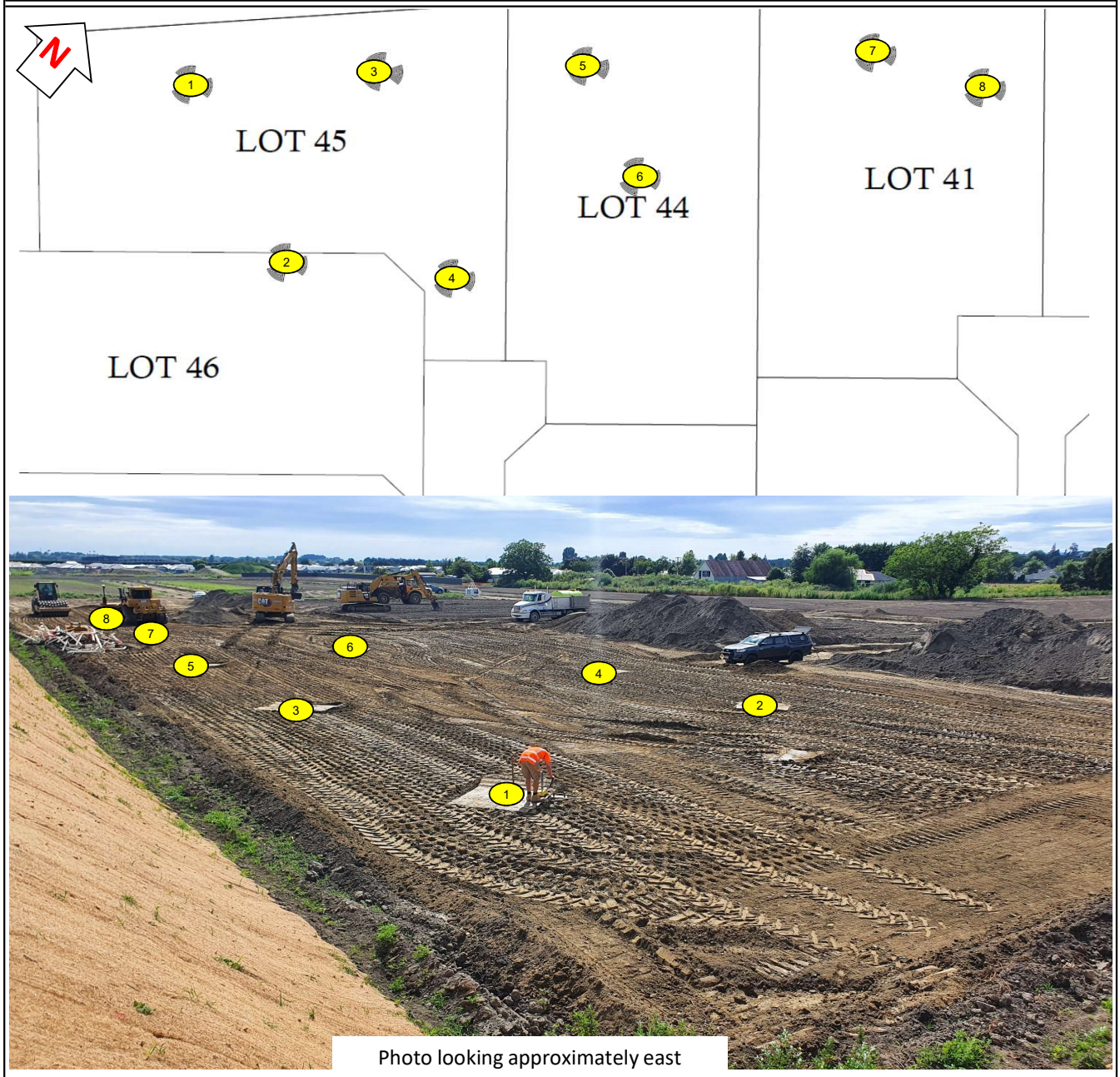

Photo looking approximately east

Comments:
Testing undertaken on a single fill layer, approximately 200 - 300mm thick. The contractor was advised that the results were acceptable.

Report written by:	HN	13 December 2021
Report reviewed by:	LE	12 January 2022
Approved for issue:		12 January 2022

Distribution:
1 Galbraith EarthMovers Ltd
2 Civil Services File
3 Initia Ltd
4 Infir Ltd

UNIT 9 11 WAKEFIELD STREET P.O. BOX 5011 NAPIER 4145 PHONE 06 843 6996 EMAIL admin@civilservices.co.nz WEBSITE www.civilservices.co.nz

ABA20220988
APPROVED - Site Copy
Hastings District Council
20/09/2022

EARTHWORKS COMPACTION CONTROL TESTING

PROJECT:	Stage 2, Ikanui Subdivision, Hastings - Engineering Fill
CLIENT:	Galbraith Earthmovers Ltd
CONTRACTOR:	Galbraith Earthmovers Ltd
ENGINEER	Initia Ltd
TESTED BY:	HN/BN
LOCATION:	Refer partial site plan and site photo on page 1
LEVEL:	Finished subgrade level, Lots 41, 44-46
MATERIAL:	Sandy Silt, with some gravel
DATE TESTED:	10 December 2021
TIME:	10:00

Report Number: NDM21/269

NUCLEAR DENSITY METER TEST RESULTS

Test Number	1	2	3	4	5	6	7	8	Mean	Target
Probe Depth (mm)	200	200	200	200	150	200	200	200		
Wet Density (t/m^3)	2.13	2.06	2.11	2.02	2.05	2.06	2.09	2.16	2.09	
Dry Density (t/m^3)	1.88	1.85	1.88	1.79	1.86	1.82	1.87	1.93	1.86	
Max. Dry Dens. (t/m^3)	1.91 (Measured)									
Solid Density (t/m^3)	2.64 (Measured)									
Water Cont. (NDM %)	13.3	11.8	12.3	12.8	10.3	13.3	11.9	11.8	12.2	
Air Voids (%)	3.8	8.3	5.8	9.2	10.2	6.9	6.9	3.9	6.9	<8%
Compaction (%)	98.4	96.6	98.3	93.8	97.4	95.2	97.8	101.2	97.3	>95%

Comments:
Maximum dry density and solid density used above are from WSP Report NA4803 - NZS 4402:1986 Test 4.1.1 (Standard), and NZS 4402:1986 Test 2.7.1.

Test Methods: NZS 4407:2015, Test Method 4.2, Nuclear moisture-density gauge - direct transmission
Dry density, air-voids, and compaction calculated on NDM-measured wet density and water content, with laboratory-determined maximum dry density and solid density.
Scala penetrometer testing specification NZS 4402:1988 Test 6.5.2

CIVIL SERVICES (HB) LTD
UNIT 9 11 WAKEFIELD STREET P.O. BOX 5011 NAPIER 4145 PHONE 06 843 6996 EMAIL admin@civilservices.co.nz WEBSITE www.civilservices.co.nz

ABA20220988
APPROVED - Site Copy
Hastings District Council
20/09/2022

EARTHWORKS COMPACTION CONTROL TESTING

PROJECT: Stage 2, Ikanui Subdivision, Hastings - Engineering Fill
CLIENT: Galbraith Earthmovers Ltd
CONTRACTOR: Galbraith Earthmovers Ltd
TESTED BY: HN/BN
LOCATION: Refer partial site plan and site photo on page 1
LEVEL: Finished subgrade level, Lots 41, 44-46
MATERIAL: Sandy Silt, with some gravel
DATE TESTED: 10 December 2021
TIME: 10:00

Report Number: NDM21/269

OVEN-ADJUSTED NUCLEAR DENSITY METER TEST RESULTS

Test Number	1	2	3	4	5	6	7	8	Mean	Target
Probe Depth (mm)	200	200	200	200	150	200	200	200		
Wet Density (t/m^3)	2.13	2.06	2.11	2.02	2.05	2.06	2.09	2.16	2.09	
Dry Density (t/m^3)	1.91	1.83	1.86	1.80	1.87	1.80	1.85	1.89	1.85	
Max. Dry Dens. (t/m^3)	1.91 (Measured)									
Solid Density (t/m^3)	2.64 (Measured)									
Water Cont. (Oven %)	11.5	12.4	13.2	12.0	9.6	14.6	13.1	14.1	12.6	
Air Voids (%)	5.6	7.6	4.8	9.9	10.9	5.6	5.7	1.4	6.4	<8%
Compaction (%)	99.9	96.1	97.4	94.4	98.0	94.1	96.8	99.1	97.0	>95%

Comments:
Maximum dry density and solid density used above are from WSP Report NA 4803 - NZS 4402:1986 Test 4.1.1 (Standard), and NZS 4402:1986 Test 2.7.1.

Test Methods: NZS 4407:2015, Test Method 4.2, Nuclear moisture-density gauge - direct transmission

Dry density, air-voids, and compaction calculated on NDM-measured wet density and oven-dried water content, with laboratory-determined maximum dry density and solid density.

NZS4402:1986 Test 2.1 Determination of the Water Content.

UNIT 9 11 WAKEFIELD STREET P.O. BOX 5011 NAPIER 4145 PHONE 06 843 6996 EMAIL admin@civilservices.co.nz WEBSITE www.civilservices.co.nz

ABA20220988
APPROVED - Site Copy
Hastings District Council
20/09/2022

803500mN 803600mN 803700mN

HAWKES BAY EXPRESSWAY

412400mE

LOT 63

EARTH NOISE BUND (NOT PART OF CONTRACT)

LOT 64

NDM21/269 NDM21/268 NDM21/229 NDM21/229 NDM21/267 NDM21/238 NDM21/220 NDM21/247 NDM21/250 NDM21/223 NDM21/266 NDM21/263 NDM21/250 CSR22/026

LOT 45 LOT 44 LOT 41 LOT 40 LOT 22 LOT 21 LOT 20 LOT 19 LOT 18 LOT 17 LOT 16 LOT 15 LOT 14 LOT 13 LOT 12 LOT 11 LOT 10 LOT 9 LOT 8 LOT 7 LOT 6 LOT 5

LOT 46 LOT 47 LOT 43 LOT 42 LOT 39 LOT 23 LOT 24

LOT 70

LOT 25 LOT 26 27 OT 27 LOT 28 LOT 29 LOT 30 LOT 31

LOT 38 LOT 37 LOT 36 LOT 35 LOT 34 LOT 33 LOT 32

LOT 100

8034000mN

901 OMAHU ROAD

LOT 48

LOT 69 (road reserve)

LOT 70 (road reserve)

LOT 49 LOT 58 LOT 59 LOT 60 LOT 61 LOT 62

LOT 50 LOT 57

LOT 51 LOT 68 (road resevre) LOT 56

560 IKANUI ROAD

559 IKANUI ROAD

557 IKANUI ROAD

LOT 1 LOT 2 LOT 3 LOT 4

LOT 52 LOT 53 LOT 54 LOT 55

412500mE

IKANUI ROAD

803300mN 412600mE 412700mE 412800mE

LEGEND

- 0.6 — Depth of Fill Contour
- Lot Boundary (Within subdivision)
- Boundary - Outside subdivision

NOTES

Contours are at 0.1m intervals

Positive figures indicate fill from original ground level to finished ground level

All property boundaries outside the subdivision were sourced from LINZ

All property boundaries within the subdivision were sourced August 2021 from Infir

No Depth Contours calculated for road reserve, pavement to be finished by others

ENGINEER: Infir Ltd
CONTRACTOR: Galbraith EarthMovers Ltd
SURVEYOR: Civil Services (HB) Ltd

SURVEY DATUM: NZ GEODETIC 2000, Hawkes Bay Circuit
HEIGHT DATUM: HB LOCAL AUTHORITY DATUM 1972 (MSL = 10.00m)
HEIGHT ORIGIN: AP 9 DP 414543, RL = 24.10m

Revision	Description	Date
A	For Approval	10/01/2022

Approval

Client: Galbraith EARTHMOVERS

CIVIL SERVICES (HB) LTD
Unit 9, 11 Wakefield Street
PO Box 5011, Napier, 4145
NEW ZEALAND
Phone +64 6 843 6996
Website: www.civilservices.co.nz

Drawn: BN
Designed:
Surveyed: Civil Services HB Ltd
Project: Ikanui EW As Built Dwgs

Scale: 1:500 (A1) 1:1000 (A3)

This drawing is copyright and the property of the author and must not be retained, copied or used without the authority of Civil Services (HB) Ltd.

Title: As–Built Depth of Fill Plan
IKANUI BLOCK SUBDIVISION
Residential Subdivision
562 Ikanui Road
Frimley, Hastings 4120

Dwg. No. DF01
Job No. 21030
Revision A

Date Plotted: Mon Jan 10 14:05:57 2022

ABA20220988
APPROVED - Site Copy
Hastings District Council
20/09/2022

Appendix C Hastings District Forms

ABA20220988
APPROVED - Site Copy
Hastings District Council
20/09/2022

APPENDIX 62
FORM 3

To: Hastings District Council
Private Bag 9002
HASTINGS 4156

STATEMENT OF PROFESSIONAL OPINION AS TO COMPLIANCE OF THE SUBDIVISION WITH THE SUBDIVISION CONSENT CONDITIONS FOR GEOTECHNICAL WORKS

Subdivision 562 IKANUI ROAD

Owner/Developer Applecroft Ltd

Location 562 IKANUI ROAD, FRIMLEY, HASTINGS 4120

I, Nathan Hickman of Initia Ltd - Unit 6, 114 St Georges Bay Road, Parnell
(Name and address)

hereby confirm that:

1. I am a suitably qualified and registered professional experienced in the field of Geotechnical Engineering and was retained by the owner/developer in this regard on the above subdivision. My qualifications are: BE(Hons), CPEng 1014762

2. Site investigations have been carried out under my direction and are described in my report dated: Geotechnical Completion Report Initia Ref 1012 Rev 0 dated March 2022

3. I am aware of the details of the proposed scheme of subdivision, the conditions imposed by Council on the Subdivision Consent and of the general nature of proposed engineering works as shown on the following drawings: DE01 and FL01 Job No 2130 by Civil Services (HB) Ltd
(Insert references to all drawings including dates of latest amendments).

4. In my professional opinion, I consider that the works have been completed in accordance with the conditions of the subdivision consent for geotechnical works, providing that:

(Please provide details of any works needed to ensure compliance with the Standards)

(a)

(b) N/A refer to report as per #2 above

(c)

This professional opinion is furnished to the Council and the owner/developer for their purposes alone, on the express conditions that it will not be relied upon by any other person and does not remove the necessity for further inspection during the course of the works.

Signed: N Hickman Date 14/3/2022

ABA20220988
APPROVED - Site Copy
Hastings District Council
20/09/2022

APPENDIX 62
FORM 6

To: Hastings District Council
Private Bag 9002
HASTINGS 4156

STATEMENT OF PROFESSIONAL OPINION AS TO SUITABILITY OF LAND FOR BUILDING DEVELOPMENT

Subdivision: 562 IKANUI ROAD

Owner/Developer: Applecroft Ltd

Location: 562 IKANUI ROAD, FRIMLEY, HASTINGS 4120

I Nathan Hickman
(full name)

of Initia Ltd - Unit 6, 114 St Georges Bay Road, Parnell
(address)

hereby confirm that:

1. I am a suitably qualified professional experienced in the field of Geotechnical Engineering and was retained by the owner/developer in this regard on the above subdivision. My qualifications are BE(Hons), CPEng 1014762

2. The extent of my inspections during construction, and the results of all tests carried out are described in my report dated Geotechnical Completion Report Initia ref 1062 rev 0 dated March 2022

3. In my professional opinion, not to be construed as a guarantee, I consider that:

   * a. The earth fills shown on the attached Plan No DF01, Job No 21030 prepared by Civil Services (HB) Ltd have been placed in compliance with the Code of Practice of the Hastings District Council.
   b. The completed works give due regard to the land slope and foundation stability considerations.
   c. The filled ground is suitable for the erection thereon of residential buildings not requiring
   * specific design in terms of NZS 3604 and related documents providing that:
      i. .....
      ii. N/A - Structural raft type foundations are
      iii. recommended. Ref Section 4.6 of report ref in #2 above
   * d. The original ground not affected by filling is suitable for the erection thereon of residential buildings not requiring specific design in terms of NZS 3604 and related documents providing that.
      i. N/A
      ii. .....
      iii. .....

4. This professional opinion is furnished to the Council and the owner/developer for their purposes alone, on the express conditions that it will not be relied upon by any other person and does not remove the necessity for the normal inspection of foundation conditions at the time of erection of any dwelling.

Signed N Hickman Date 14/3/2022

* Delete items not applicable
A similar form for those giving their professional opinion relating to the new NES on contaminated soils

ABA20220988
APPROVED - Site Copy
Hastings District Council
20/09/2022

Appendix D Contractors PS3

ABA20220988
APPROVED - Site Copy
Hastings District Council
20/09/2022

SCHEDULE 6 – FORM OF PRODUCER STATEMENT – CONSTRUCTION

ISSUED BY Galbraith Earthmovers LTD *(Contractor)*

TO Applecroft Limited *(Principal)*

IN RESPECT OF Ikanui Block subdivision, Hastings - Earthworks *(Description of Contract Works)*

AT *(Address)*

Galbraith Earthmovers LTD
Click to enter the Contractor *(Contractor)* has contracted to Applecroft Limited *(Principal)* to carry out and complete certain building works in accordance with a Contract titled Contract No. J20121 Ikanui Block subdivision, Hastings - Earthworks ('the Contract')

I Steve Galbraith *(Duly Authorised Agent)* a duly authorised representative of Galbraith Earthmovers *(Contractor)* believe on reasonable grounds that Galbraith Earthmovers *(Contractor)* has carried out and completed:

☑ All

☐ Part only

as specified in the attached particulars of the contract works in accordance with the Contract.

(Signature of Authorised Agent on behalf of)

Date 23/2/22

Galbraith Earthmovers LTD
(Contractor)

(Address)