101 Guyton Street
P O Box 637, Whanganui
Phone: (06) 349 0001
Fax: (06) 349 0000
Email: wdc@whanganui.govt.nz
Web: www.whanganui.govt.nz

WDC APPROVED

WHANGANUI DISTRICT COUNCIL
Te Kaunihera a Rohe o Whanganui

INSPECTION RECORD

This record, together with the Building Consent and approved plans, is to remain on the construction site at all times.

Project Location	***TO BOOK AN INSPECTION PLEASE PHONE WDC BUILDING CONTROL ON 349 0001 AND QUOTE THE FOLLOWING APPLICATION NUMBER:***	***BCon17/0093***
10 Leicester Pl WHANGANUI		
Description of Work	**New Residential Dwelling with Attached Garage 126m2**	

Applicant	Devon Homes 165A Great North Road, Otamatea, Whanganui 4501
Designer	Mr MR Lapuz 85 Springvale Road, Springvale, Whanganui 4501
Builder	E Anusencion 165A Great North Road, Otamatea, Whanganui 4501

SUMMARY OF CONDITIONS

Building Consent Number BCon17/0093

PIM Conditions

Code	***Condition***
	All work on the project must comply with the requirements of the NZ Building Code.
	A PIM only document is not an approval to build. A Building Consent is required before building work commences.
	W.D.C will follow up on building work not completed within two years of building consent issue.
	A Building Consent lapses and is of no effect if the building work has not been started within 12 months of the date of issue.
	If the building is public premises it may not be occupied until either a code compliance certificate or certificate for public use has been issued.
	Please note [Electrical, and Gasfitting subtrades do not form part of the building consent inspection process. However, Council is required to receive 'Energy Certificates' from both of these trades before issue of a Code Compliance Certificate].
PIMconnect	Existing sanitary sewer 1.3 m off the left hand boundary (1.6 m deep). Existing stormwater connection at 1.9m off the left hand boundary (1.4 m deep). Existing water connection at 2.48 m off the left hand boundary.

Building Consent Conditions

Code	***Condition***

Your project's inspections are listed on the next page...

101 Guyton Street
P O Box 637, Whanganui
Phone: (06) 349 0001
Fax: (06) 349 0000
Email: wdc@whanganui.govt.nz
Web: www.whanganui.govt.nz

WDC APPROVED

WHANGANUI DISTRICT COUNCIL
Te Kaunihera a Rohe o Whanganui

<u>Please Note</u>: A minimum of 48 hours notice is required for the booking of an inspection. The inspection record sheet and accompanying building consent documentation must be on site for use by the inspector at the time of the inspection.

All inspections are to be carried out by BCA Building Inspectors unless prior arrangements have been made by the BCA to have an approved qualified person inspect specific items (eg. Engineer). Inspections shall be carried out in accordance with the attached schedule of inspection types. It is the owner's responsibility to ensure all necessary inspections are carried out as required. Please contact WDC if you are unsure what requires inspection – do not cover or enclose any building work without inspection.

Note: Further inspections may incur additional cost at time of Code Compliance Certificate issue.

Inspections Record For Building Consent Number BCon17/0093

Inspection	*When to Request*	*Date*	*Inspector*	*Complies with Code*	*Reinspect*	*Notes*		
CONCRETE SLAB INSPECTION	Prior to placing Concrete							
FRAMING INSPECTION	When all framing is complete.							
BRICK MASONRY INSPECTION	When bricks have been laid to sill height.							
BUILDING PRELINE INSPECTION	Before Internal linings are fixed.							
POST LINE INSPECTION	To inspect fixings. Prior to covering up.							
FINAL BUILDING AND PLUMBING COMBINED INSPECTION	On Completion					Before requesting a final inspection please supply the following information: Application for Code Compliance Certificate. Memorandum of Restricted Building Work (RBW) for all required trades. As-Built Drainage plan. Energy certificate/s.		

101 Guyton Street
P O Box 637, Whanganui
Phone: (06) 349 0001
Fax: (06) 349 0000
Email: wdc@whanganui.govt.nz
Web: www.whanganui.govt.nz

WDC APPROVED

WHANGANUI DISTRICT COUNCIL
Te Kaunihera a Rohe o Whanganui

PLUMBING SUBFLOOR INSPECTION	Before covering up							
PLUMBING PRELINE INSPECTION	Before covering up							
SANITARY DRAINS INSPECTION	Before backfilling drains							
STORMWATER DISPOSAL INSPECTION	Before backfilling drains							
WATERPROOFING INSPECTION	Before covering up					Shower tanking.		

101 Guyton Street
P O Box 637, Whanganui
Phone: (06) 349 0001
Fax: (06) 349 0000
Email: wdc@whanganui.govt.nz
Web: www.whanganui.govt.nz

WDC APPROVED

WHANGANUI DISTRICT COUNCIL
Te Kaunihera a Rohe o Whanganui

BUILDING CONSENT NUMBER BCon17/0093

Section 51, Building Act 2004

The building:

Street address of building:	***Legal description of land where building is located:***
10 Leicester Pl WHANGANUI	Lot 23 DP 500432 0.0461 Ha
Building name:	***Location of building within site/block number:***
New Dwelling with Attached Garage	
Level/unit number:	

The owner:

Name of Owner:	
S Robertson, G Robertson	
Mailing address:	***Street Address/registered Office:***
PO Box 988 Whanganui 4541	PO Box 988 Whanganui 4541

Phone numbers:

Landline:		***Mobile:***	
Daytime:		***After hours:***	
Facsimile number:			
Email address:	gayplussteve@gmail.com	***Website:***	

First point of contact for communications with the building consent authority:

Contact Person:	
Devon Homes	
Mailing address:	***Street Address/registered Office:***
165A Great North Road, Otamatea, Whanganui 4501	165A Great North Road, Otamatea, Whanganui 4501

Phone number:

Landline:		***Mobile:***	
Daytime:	3452393	***After hours:***	
Facsimile number:			
Email address:		***Website:***	

Building Work

The following building work is authorised by this consent

Project
New Residential Dwelling with Attached Garage 126m2

WDC APPROVED

Intended Use	***Intended Life***
Single Detached Residential	50+ Years
Estimated Value ($)	
$194000.00	

This building consent is issued under section 51 of the Building Act 2004. This building consent does not relieve the owner of the building (or proposed building) of any duty of responsibility under any other Act relating to or affecting the building (or proposed building). This building consent also does not permit the construction, alteration, demolition, or removal of the building (or proposed building) if that construction, alteration, demolition or removal would be in breach of any other Act.

101 Guyton Street
P O Box 637, Whanganui
Phone: (06) 349 0001
Fax: (06) 349 0000
Email: wdc@whanganui.govt.nz
Web: www.whanganui.govt.nz

WDC APPROVED

WHANGANUI DISTRICT COUNCIL
Te Kaunihera a Rohe o Whanganui

CONDITIONS OF BUILDING CONSENT NUMBER BCon17/0093

Section 51, Building Act 2004

This Building Consent is issued Subject to the following conditions:

Building Act 2004, Section 90:

Inspections by Building Consent Authorities

Agents authorised by the building consent authority for the purposes of this section are entitled, at all times during normal working hours or while building work is being done, to inspect

(a) land on which building work is being or is proposed to be carried out; and

(b) building work that has been or is being carried out on or off the building site; and

(c) any building.

Informative notes:

- [Informative note: The Building Consent, conditions, inspection sheet, and approved plans must be kept on site at all times until completion of the project.]
- [Informative note: Failure to request inspections will risk the non-issuing of a code compliance certificate and the structure may be deemed non-complying.]
- [Informative note: Any inspection time required over and above that allowed may incur a further charge.]
- [Informative note: Under Section 52, a building consent lapses and is of no effect if the building work to which it relates is not commenced within 12 months after the date of issue.]
- [Informative note: Under Section 93, if the owner has not made application within 24 months, the BCA (Building Control Authority), must decide whether or not to issue a CCC (Code Compliance Certificate).]

Compliance Schedule:

A compliance schedule (CS) is not required for this building.

‡Attachments

‡Copies of the following documents are attached to this building consent:
‡Project information memorandum number BCon17/0093'
‡Inspection record

Signed for and on behalf of the Whanganui District Council

GJ Hoobin
Environmental Standards Team Leader **Date**: 13 April, 2017

101 Guyton Street
P O Box 637, Whanganui
Phone: (06) 349 0001
Fax: (06) 349 0000
Email: wdc@whanganui.govt.nz
Web: www.whanganui.govt.nz

WDC APPROVED

WHANGANUI DISTRICT COUNCIL
Te Kaunihera a Rohe o Whanganui

PROJECT INFORMATION MEMORANDUM NUMBER BCon17/0093

Section 34, Building Act 2004

Devon Homes
165A Great North Road
Otamatea
Whanganui 4501

Project Location	***Assessment Number/Legal Description***
10 Leicester Pl WHANGANUI	Lot 23 DP 500432 0.0461 Ha
Category	***Description of Work***
New Residential Dwelling - $100001 - $200000	New Residential Dwelling with Attached Garage 126m2
Intended Life	***Estimated Value ($)***
50+ Years	194000.00

This Project Information Memorandum is confirmation that the proposed work may be undertaken, subject to the provisions of the Building Act 2004 and any requirements of the Building Consent (number BCon17/0093), which has been granted.

This Project Information Memorandum is subject to the following conditions:

- **Existing sanitary sewer 1.3 m off the left hand boundary (1.6 m deep).**
- **Existing stormwater connection at 1.9m off the left hand boundary (1.4 m deep).**
- **Existing water connection at 2.48 m off the left hand boundary.**
- **All work on the project must comply with the requirements of the NZ Building Code.**

Signed for and on behalf of the Whanganui District Council

GJ Hoobin
Environmental Standards Team Leader **Date**: 13 April, 2017

WDC APPROVED

Hi Andrew,

Please find attached,

1. Engineer memorandum certificate
2. PS-1 Soil test report
3. Soil test
4. Drawing sheet 5, sheet 6 and sheet 13

Regards

Marcelo

Received Tuesday, 11 April 2017

WDC APPROVED

3 April 2017

Wanganui District Council
101 Guyton Street, PO Box 637
Wanganui

Project number: BCon 17/0093

Project location: Lot 23, 10 Leicester Place, Springvale, Wanganui

Response to RFI dated (29 March 2017)

1. Refer to attached to new Certificate of Title.
2. Refer to attached authorisation letter
3. Refer to attached to Engineer's Soil test report.
4. Refer to attached drawing sheet 4.
5. Refer to attached drawing sheet 13.
6. Refer to attached drawing sheet 12.
7. Refer to attached to Engineer's Soil test report.
8. Refer to attached drawing sheet 2.

Marcelo Lapuz
Devon Homes

Received Tuesday, 4 April 2017

WDC APPROVED

Memorandum from licensed building practitioner: Certificate of design work

Section 45 and section 30C, Building Act 2004

Please fill in the form as fully and correctly as possible.

If there is insufficient room on the form for requested details, please continue on another sheet and attach the additional sheet(s) to this form.

THE BUILDING

Street address: 10 LEICESTER PLACE

Suburb: SPRINGVALE

Town/City: WANGANUI Postcode:

THE OWNER(S)

Name(s): MR STEVE & MRS. GAY ROBERTSON

Mailing address: c/o DEVON HOMES / REUTERS CONSTRUCTION LTD

Suburb: ~~165~~ 165A GT NORTH RD PO Box/Private Bag:

Town/City: WANGANUI Postcode:

Phone number: 06 345 2393 Email address:

Received Tuesday, 11 April 2017

WDC APPROVED

I am providing this memorandum in my role as the: Please tick the option that applies ✓

- ✓ **sole** designer of all of the RBW design outlined in this memorandum – I carried out all of the RBW design work myself – no other person will be providing any additional memoranda for the project
- ○ **lead** designer who carried out some of the RBW design myself but also supervised other designers – this memorandum covers their RBW design work as well as mine, and **no other** person will be providing any additional memoranda for the project
- ○ **lead** designer for all but specific elements of RBW – this memorandum only covers the RBW design work that I carried out or supervised and the **other** designers will provide their own memorandum relating to their specific RBW design
- ○ **specialist** designer who carried out specific elements of RBW design work as outlined in this memorandum – other designers will be providing a memorandum covering the remaining RBW design work

I DAVID MULHOLLAND carried out / supervised the following design work that is restricted building work

Design work that is RBW	Description of RBW	Carried out or supervised	Reference to plans and specifications
Tick ✓ if included. Cross ✗ if excluded	If appropriate, provide details of the RBW	Tick ✓ whether you carried out this design work or supervised someone else carrying out this design work	If appropriate, specify references
All RBW design work relating to B1 ✓		✓ Carried out ○ Supervised	
Foundations and subfloor framing ✓		✓ Carried out ○ Supervised	

Received Tuesday, 11 April 2017

WDC APPROVED

Design work that is RBW	Description of RBW	Carried out or supervised	Reference to plans and specifications
Tick ✓ if included. Cross ✗ if excluded	If appropriate, provide details of the RBW	Tick ✓ whether you carried out this design work or supervised someone else carrying out this design work	If appropriate, specify references
Walls ☒		○ Carried out ○ Supervised	
Roof ☒		○ Carried out ○ Supervised	
Columns and beams ☒		○ Carried out ○ Supervised	
Bracing ☒		○ Carried out ○ Supervised	
Other ☒		○ Carried out ○ Supervised	

Received Tuesday, 11 April 2017

WDC APPROVED

Design work that is RBW	Description of RBW	Carried out or supervised	Reference to plans and specifications
Tick ✓ if included. Cross ✗ if excluded	If appropriate, provide details of the RBW	Tick ✓ whether you carried out this design work or supervised someone else carrying out this design work	If appropriate, specify references
All RBW design work relating to E2 ✗		◯ Carried out ◯ Supervised	
Damp proofing ✗		◯ Carried out ◯ Supervised	
Roof cladding or roof cladding system ✗		◯ Carried out ◯ Supervised	
Ventilation system (for example, subfloor or cavity) ✗		◯ Carried out ◯ Supervised	
Wall cladding or wall cladding system ✗		◯ Carried out ◯ Supervised	
Waterproofing ✗		◯ Carried out ◯ Supervised	
Other ✗		◯ Carried out ◯ Supervised	

Received Tuesday, 11 April 2017

WDC APPROVED

Design work that is RBW	Description of RBW	Carried out or supervised	Reference to plans and specifications
Tick ✓ if included. Cross ✗ if excluded	If appropriate, provide details of the RBW	Tick ✓ whether you carried out this design work or supervised someone else carrying out this design work	If appropriate, specify references
Emergency warning systems			
Evacuation and fire service operation systems ✗		○ Carried out ○ Supervised	
Suppression or control systems			
Other			

Note: The design of fire safety systems is only restricted building work when it involves small-to-medium apartment buildings as defined by the Building (Definition of Restricted Building Work) Order 2011.

Waivers or modifications of the Building Code are required. ○ Yes ✓ No

If Yes, provide details of the waivers or modifications below:

Clause	**Waiver/modification required**
List relevant clause numbers of building code	Specify nature of waiver or modification of building code required

Received Tuesday, 11 April 2017

WDC APPROVED

Name and contact details of the licensed building practitioner who is licensed to carry out or supervise design work that is restricted building work.

Name: DAVID MULHOLLAND	LBP or Registration number: 41430
The practitioner is a: ◯ Design LBP ◯ Registered architect ☑ Chartered professional engineer	
Design Entity or Company (optional): DAVID MULHOLLAND CONSULTING ENGINEER LTD	
Mailing address (if different from below):	
Street address/Registered office:	
Suburb:	Town/City: WANGANUI
PO Box/Private Bag: 991	Postcode:
Phone number: 021 299 5603	Mobile:
After hours:	Fax:
Email address: bunicouples@gmail.com	Website:

DECLARATION

I DAVID MULHOLLAND LBP, state that I have applied the skill and care reasonably required of a competent design professional in carrying out or supervising the Restricted Building Work (RBW) described in this form, and that based on this, I also state that the RBW:

- Complies with the building code, or
- Complies with the building code subject to any waiver or modification of the building code recorded on this form

Signature:

Date: 10/4/17

Received Tuesday, 11 April 2017

WDC APPROVED

Building Code Clause(s) B1(Structure)

PRODUCER STATEMENT – PS1 – DESIGN

(Guidance on use of Producer Statements (formerly page 2) is available at www.ipenz.nz)

ISSUED BY: DAVID MULHOLLAND CONSULTING ENGINEER LIMITED
(Design Firm)

TO: REUTERS CONSTRUCTION LIMITED
(Owner/Developer)

TO BE SUPPLIED TO: WANGANUI DISTRICT COUNCIL
(Building Consent Authority)

IN RESPECT OF: PROPOSED RESIDENCE
(Description of Building Work)

AT: 10 LEICESTER PLACE
(Address)

Town/City: WANGANUI **LOT** ..... **DP** ..... **SO** .....
(Address)

We have been engaged by the owner/developer referred to above to provide:

SPECIFIC FOUNDATION DESIGN

(Extent of Engagement)

services in respect of the requirements of Clause(s) B1(Structure) of the Building Code for:

☐ All or ☒ Part only (as specified in the attachment to this statement), of the proposed building work.

The design carried out by us has been prepared in accordance with:

☐ Compliance Documents issued by the Ministry of Business, Innovation & Employment B1/VM1 or
(verification method/acceptable solution)

☐ Alternative solution as per the attached schedule

The proposed building work covered by this producer statement is described on the drawings titled:

PROPOSED RESIDENCE for Mr.& Mrs. ROBERTSON and numbered Sheet no.1 to Sheet No. 13 ;
together with the specification, and other documents set out in the schedule attached to this statement.

On behalf of the Design Firm, and subject to:
(i) Site verification of the following design assumptions safe bearing pressure 70Kpa minimum
(ii) All proprietary products meeting their performance specification requirements;

I believe on reasonable grounds that a) the building, if constructed in accordance with the drawings, specifications, and other documents provided or listed in the attached schedule, will comply with the relevant provisions of the Building Code and that b), the persons who have undertaken the design have the necessary competency to do so. I also recommend the following level of construction monitoring/observation:

☐ CM1 ☐ CM2 ☐ CM3 ☐ CM4 ☐ CM5 (Engineering Categories) or ☒ as per agreement with owner/developer (Architectural)

I, DAVID JOHN MULHOLLAND am: ☒ CPEng 41430 # ☐ Reg Arch ..... #
(Name of Design Professional)

I am a Member of: ☒ IPENZ ☐ NZIA and hold the following qualifications: BE(Hons),MIPENZ, CPEng, PEInt(NZ)
The Design Firm issuing this statement holds a current policy of Professional Indemnity Insurance no less than $200,000*.
The Design Firm is a member of ACENZ: ☐

SIGNED BY DAVID JOHN MULHOLLAND (Signature)
(Name of Design Professional)

ON BEHALF OF DAVID MULHOLLAND CONSULTING ENGINEER LIMITED Date 10/04/2017
(Design Firm)

Note: This statement shall only be relied upon by the Building Consent Authority named above. Liability under this statement accrues to the Design Firm only. The total maximum amount of damages payable arising from this statement and all other statements provided to the Building Consent Authority in relation to this building work, whether in contract, tort or otherwise (including negligence), is limited to the sum of $200,000.*

This form is to accompany **Form 2 of the Building (Forms) Regulations 2004** for the application of a Building Consent.

THIS FORM AND ITS CONDITIONS ARE COPYRIGHT TO ACENZ, IPENZ AND NZIA

Received Tuesday, 11 April 2017

DAVID MULHOLLAND
CONSULTING ENGINEER
36 Ridgway Street, PO Box 991, Wanganui
Mobile 021 299 5603
Email bumicouplers@gmail.com

WDC APPROVED

Date 10 APR 2017 | Job No. 17019.3 | Page No. 1
Computed DAVID | Client
Project FOUNDATION - HOUSE AT 10 LEICESTER PLACE, WANGANUI.

Refer to attached drgs by DEVORHOMES/REUTERS CONSTR. LTD Sheet no 1 to Sheet no 13.

and to the Soil Tests Results, Penetrometer Test carried out on 30 March 2017.

Foundation is to be a Slab on ground.

minimum Safe bearing pressure at depth 400 & 500 below ground is 70 kPa - see Penetrometer Results

loads onto slab -

roof 0.2 kPa @
0.2 ceiling
walls 0.80
partitions 0.2
Sw floor 2.4
slab
3.8 kPa or say 5 to 7 kPa conservatively incl live load

Live load onto edge beam, which is 24d(w) x 50d(d)

Stud wall 0.45 kPa
brick Veneer 100 th 1.9 kPa
2.35 kPa x 2.4 m high → 5.64 kN/m

plus say 3.5 m (max) of roof @ 0.44(G) + 0.25(Q) = 0.69 kPa
→ 2.4 kN/m
∴ total to edge beam = 8.04 kN/m

Received Tuesday, 11 April 2017

DAVID MULHOLLAND
CONSULTING ENGINEER
36 Ridgway Street, PO Box 991, Wanganui
Mobile 021 299 5603
Email bumicouplers@gmail.com

WDC APPROVED

Date ..... Job No ..... Page No. 2

Computed ..... Client .....

Project .....

Loads exerted on soil

— under slab G ≈ 3.84 kPa or say 5 to 7 kPa

plus live load ≈ 1.5

maximum 8.5 kPa

<< 70 permissible

OK.

Load exerted onto edge beam

≈ 8.04 (walls & roof) kN/m

+ S.W 500 (d) x 240 (w) → 2.9 kN/m

total ≈ 10.94 say 11 kN/m

bearing pressure = $\frac{11}{.24}$ = 46 kPa << 70 kPa permissible

Hence pressure exerted onto the soil is well within the permissible limits.

Slab reinforcement — 100 thk slab shed have 148 mm²/metre width of reinforcement

— using 665 seismic mesh

% reinforcement = $\frac{148}{1000 \times 100} \times 100$ = 0.15% OK.

Conclusion - 100 mm thick slab with 665 mesh grade 500 concrete 20 MPa - quite OK as foundation.

Received Tuesday, 11 April 2017

WDC APPROVED

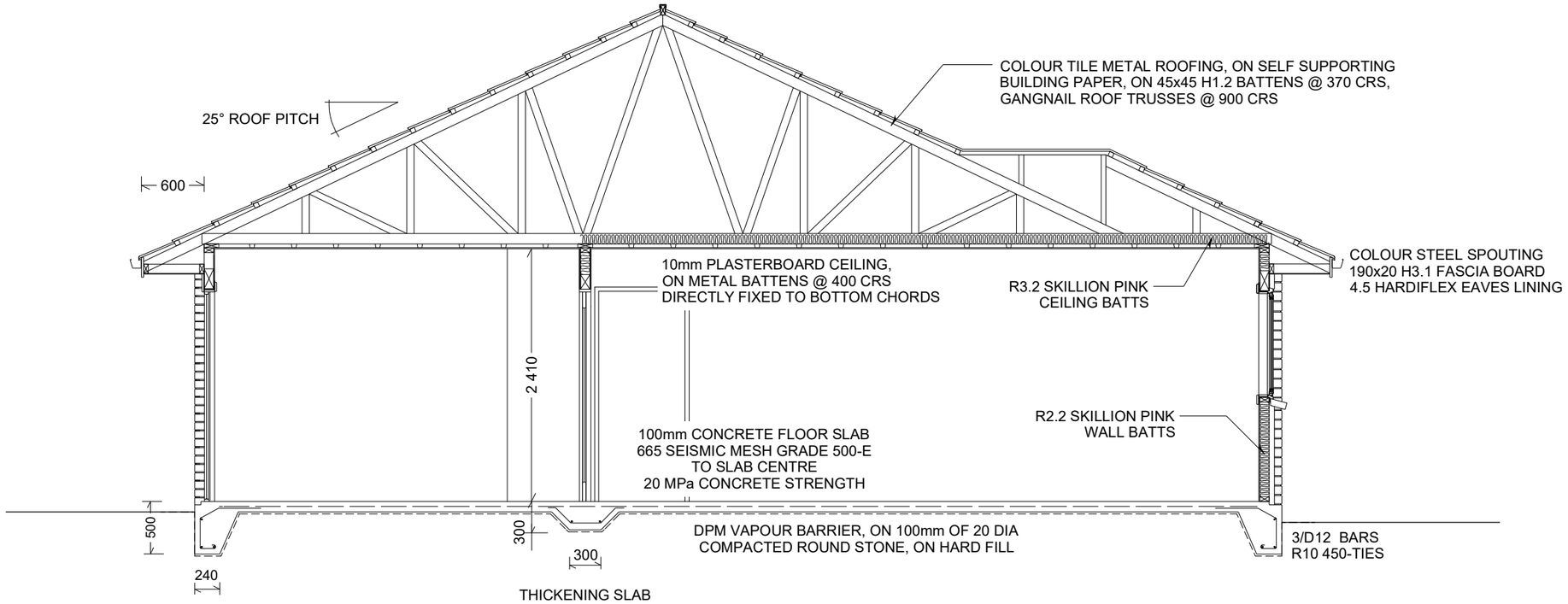

SECTION - B

TIMBER GRADES: ALL TIMBER TO BE MSG8, UNLESS SPECIFIED

2.40 METRES STUDS HEIGHT: 90x45 H1.2 FRAMING STUDS @ 600 CRS

PROPOSED RESIDENCE FOR

MR STEVE & MRS GAY ROBERTSON

10 LEICESTER PLACE, SPRINGVALE, WANGANUI

SECTION

Scale:	Sheet No.
1:50	5
Date: 23 FEB 2017	Revision
Job No.	

No	Dates	Amendments
a	6 MAR 2017	REVISED LOCATION PLAN
b	31 MAR 2017	COUNCIL REQUIREMENTS
c	11 APRIL 2017	COUNCIL REQUIREMENTS
d		
e		
f		

Notes:-

Member Certified Builders

DEVON HOMES

REUTERS CONSTRUCTION LTD

165 A, GREAT NORTH ROAD, WANGANUI NEW ZEALAND

PHONE: +64-6-3452393 FA X: +64-6-3452165

EMAIL: reuters@devonhomes.co.nz http://www.devonhomes.co.nz

These plans are the copyright of REUTERS CONSTRUCTIONS LTD

Received Tuesday, 11 April 2017

WDC APPROVED

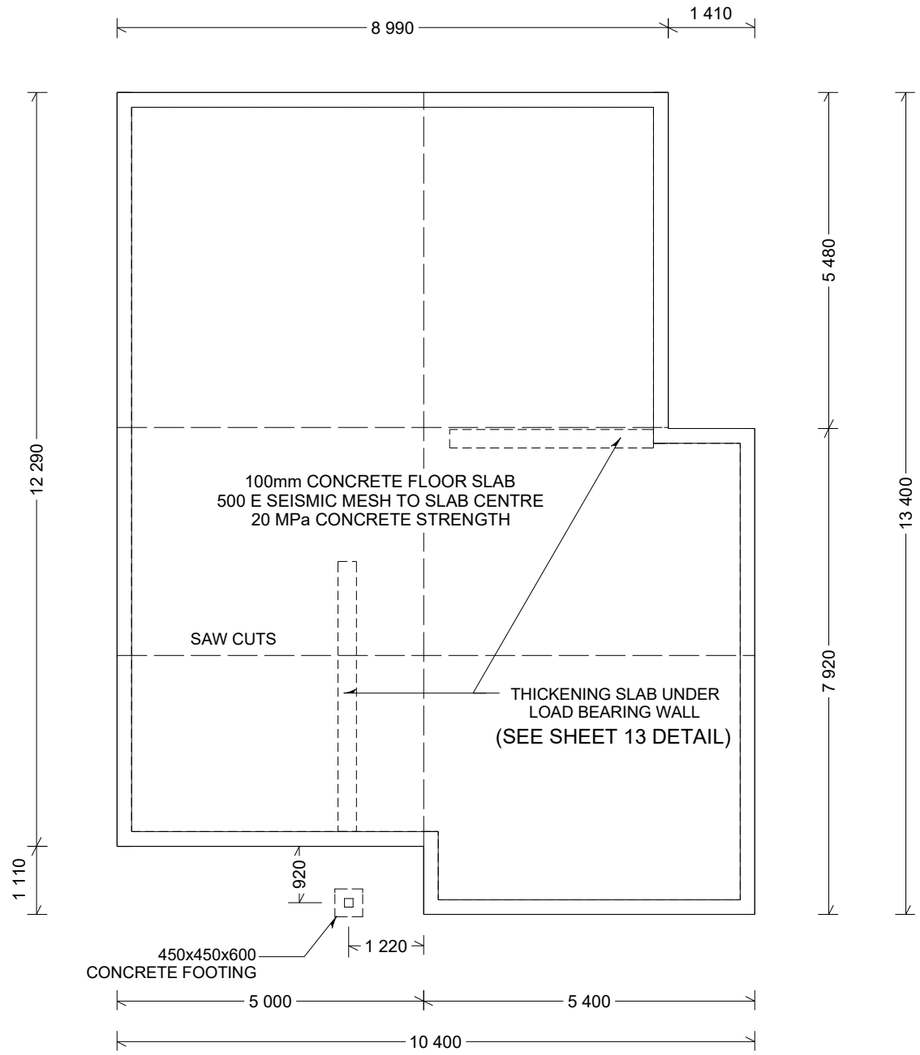

PROPOSED RESIDENCE FOR

MR STEVE & MRS GAY ROBERTSON

10 LEICESTER PLACE, SPRINGVALE, WANGANUI

FOUNDATION PLAN

Scale:	Sheet No.
1:100	6
Date: 23 FEB 2017	Revision
Job No.	

No	Dates	Amendments
a	6 MAR 2017	REVISED LOCATION PLAN
b	31 MAR 2017	COUNCIL REQUIREMENTS
c	11 APRIL 2017	COUNCIL REQUIREMENTS
d		
e		
f		

Notes:-

DEVON HOMES

REUTERS CONSTRUCTION LTD

165 A, GREAT NORTH ROAD, WANGANUI NEW ZEALAND

PHONE: +64-6-3452393 FA X: +64-6-3452165

EMAIL: reuters@devonhomes.co.nz http://www.devonhomes.co.nz

These plans are the copyright of REUTERS CONSTRUCTIONS LTD

Received Tuesday, 11 April 2017

WDC APPROVED

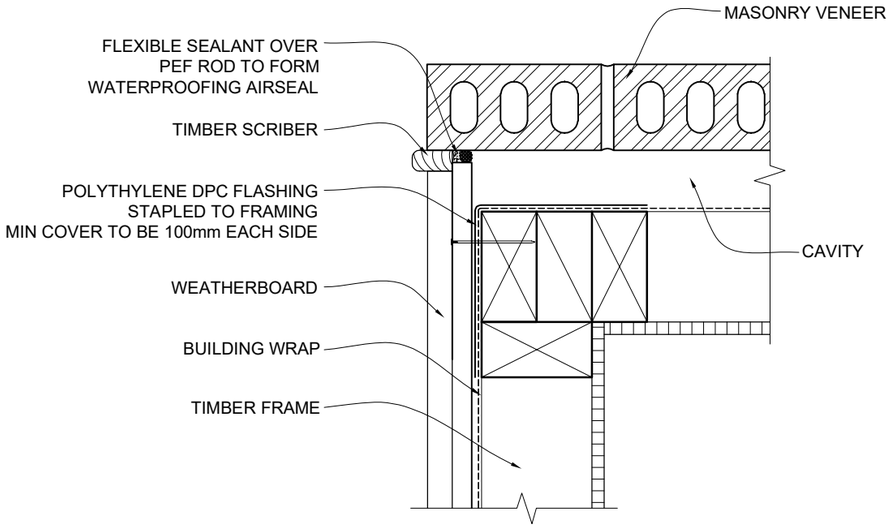

MASONRY VENEER TO WEATHERBOARD CORNER DETAIL

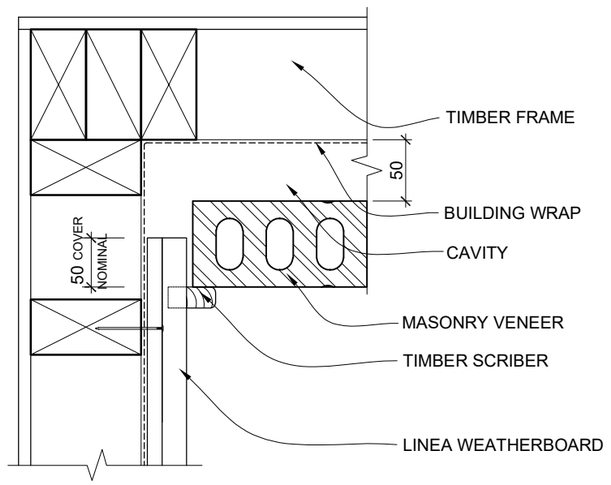

MASONRY VENEER TO WEATHERBOARDSCORNER DETAILS

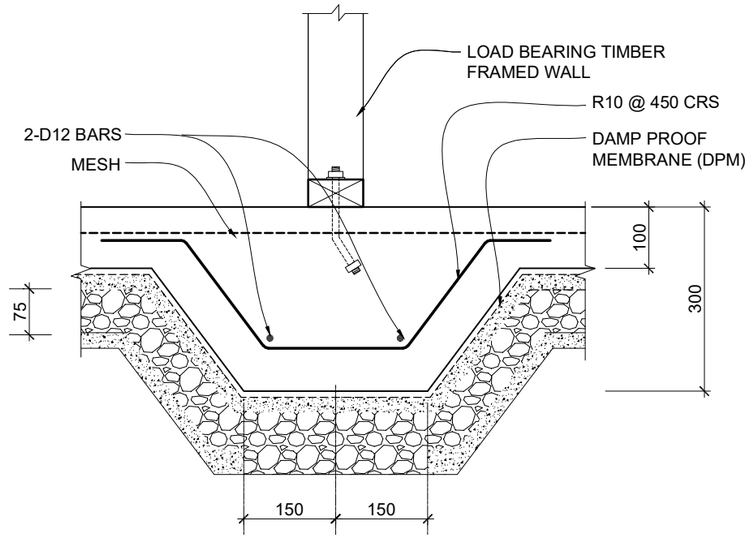

FLOOR THICKENING DETAIL

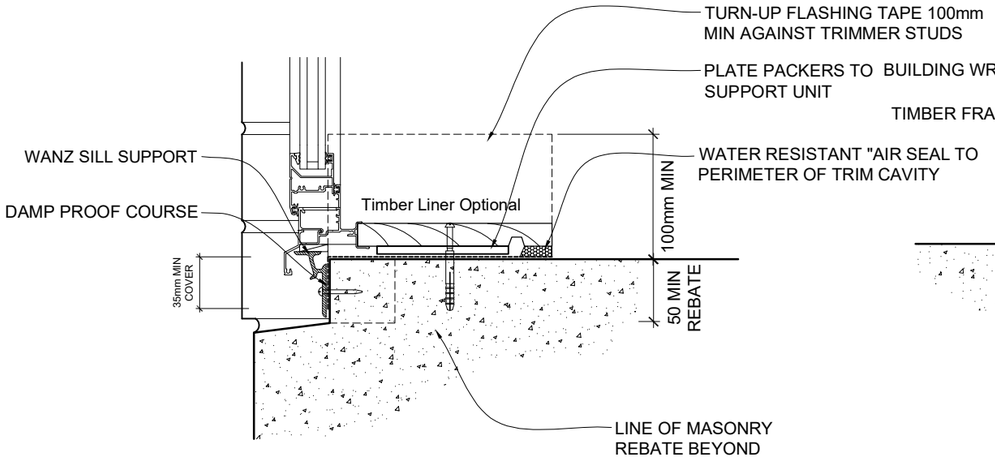

SILL THRESHOLD FLASHING DETAIL

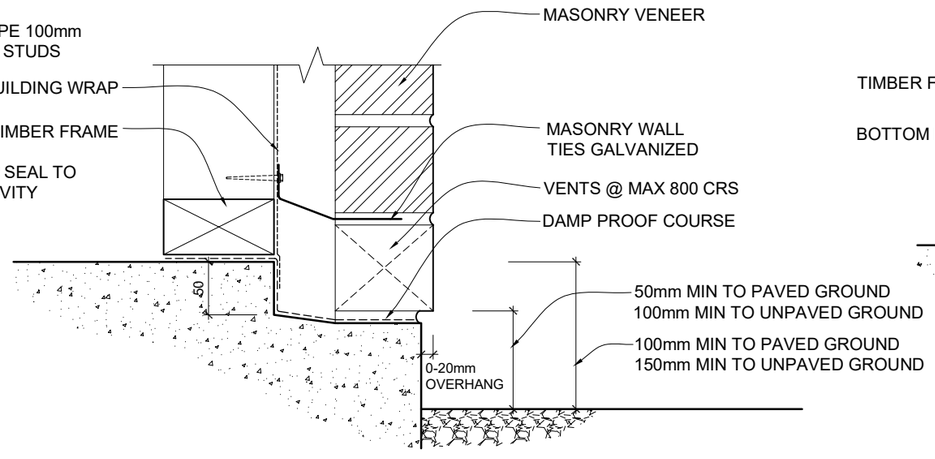

MASONRY VENEER FLOOR REBATE DETAIL

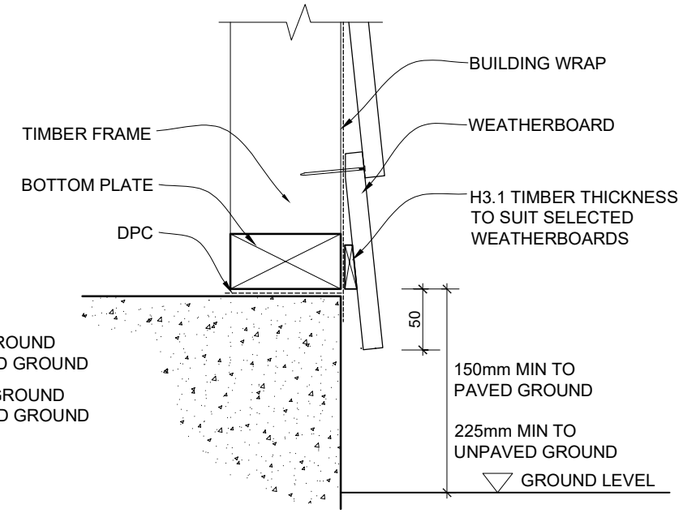

GROUND CLEARANCE WEATHERBOARDS PROFILE

PROPOSED RESIDENCE FOR

MR STEVE & MRS GAY ROBERTSON

10 LEICESTER PLACE, SPRINGVALE, WANGANUI

TYPICAL DETAILS

Scale:	Sheet No.
NTS	13
Date: 2 MAR 2017	Revision
Job No.	

No	Dates	Amendments
a	31 MAR 2017	COUNCIL REQUIREMENTS
b	11 APRIL 2017	COUNCIL REQUIREMENTS
c		
d		
e		
f		

Notes:-

DEVON HOMES
REUTERS CONSTRUCTION LTD
165 A, GREAT NORTH ROAD, WANGANUI NEW ZEALAND
PHONE: +64-6-3452393 FA X: +64-6-3452165
EMAIL: reuters@devonhomes.co.nz http://www.devonhomes.co.nz

These plans are the copyright of REUTERS CONSTRUCTIONS LTD

WDC APPROVED

Scala Penetrometer Test Sheet

Our Ref: 17019.3

Project Name: Steve & Gay Robertson

Project Location: 10 Liecester Place, Springvale

Date Tested: 30 March 2017
Time Tested: 11:00 AM
Tested By: David
Report Date: 30 March 2017

Tests: NZS4402:1986 Test 6.5.2 Hand Method Using a Scala Penetrometer

REVISED 5/4/17.

Test Hole (Blows / 100mm : Bearing Capacity (Kpa)

Depth (mm)	BH1 Blows per 100mm	BH1 Safe Bearing Capacity (Kpa)	Blows per 100mm	Safe Bearing Capacity (Kpa)	Blows per 100mm	Safe Bearing Capacity (Kpa)
100	9	230				
200	9	230				
300	6	175				
400	2	70				
500	2	70				
600	3	100				
700	5	150				
800	8	210				
900	13	280				
1000	12	270				
1100	14	300				
1200	12	270				
1300	18	350				
1400						
1500						
1600						
1700						
1800						
1900						
2000						
2100						
2200						
2300						
2400						
2500						

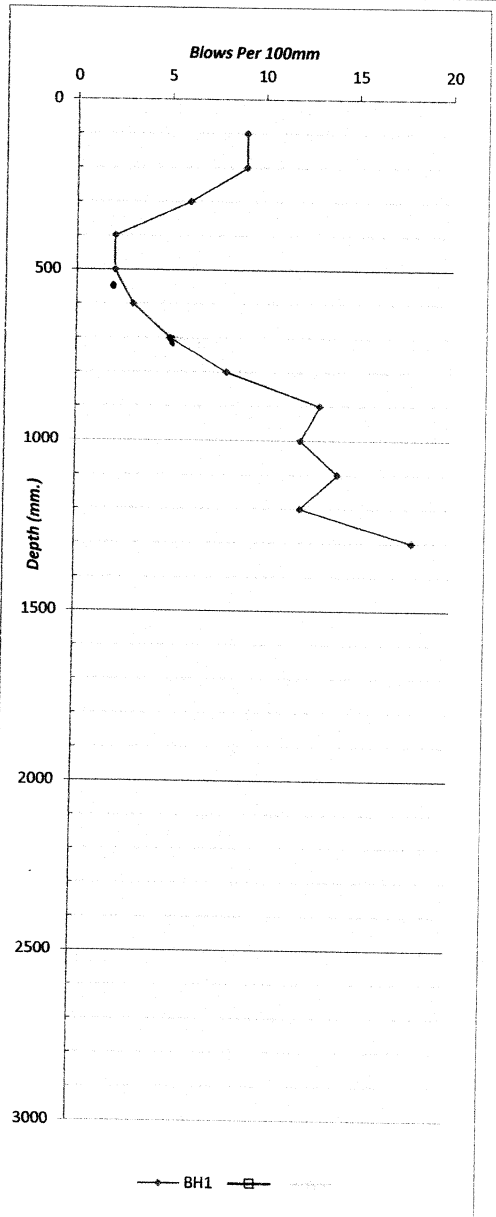

Test Location Diagragms: Attached

Remarks: upper layers dense sand with small stones
soft (peat ?) layer 300/500 depth
then dense sand.

Page: 2 of 3

FOR TIMBER FLOOR - NZS 3604 TYPE FOUNDATION IS QUITE ACCEPTABLE PROVIDED PILES GO THROUGH THE WEAK LAYER - IE. MINIMUM DEPTH 750 BELOW EXISTING GROUND.

DJ MULHOLLAND CPEng
5/4/17.

Received Tuesday, 11 April 2017

WDC APPROVED

31 March 2017

To Wanganui District Council

We authorise Marcelo Lapuz, our LBP Designer, to act on our behalf with the Wanganui District Council on Lot 23, 10 Leicester Place, Springvale, Wanganui.

Signed Gay Robertson
G. Robertson
Steve Robertson

Mr Steve & Mrs Gay Robertson

Received Tuesday, 4 April 2017

WDC APPROVED

Whanganui District Council
101 Guyton Street, Whanganui
PO Box 637, Whanganui 4540
New Zealand

Telephone (06) 349 0001
Fax (06) 349 0000
Email wdc@whanganui.govt.nz
Website www.whanganui.govt.nz

Application for Building Consent/PIM (including Temporary Structures)

Reference Number	REF170302766
Submitted On	03/03/2017 08:27
Submitted By	Marcelo Lapuz
Status	

Application for project information memorandum and/or building consent
Section 33 or section 45, Building Act 2004

Application for New Dwelling

Application Type	Building Consent
Project Description	New Dwelling with Attached Garrage

Property Selection

Property ID	69870
Address	25 Springvale Rd WHANGANUI
House Number	
Street	
Suburb	
Area Description	0.8648 Ha
Owner	
Legal Description	Lot 1 DP 474904 0.8647 Ha
Location	
Property Type	
Status	
Property Selected Id	69870
Valuation Number	1314007204
Property Ward	

Application Details

I request that you issue a:	Building Consent
(for the building work described in this application)	
Restricted Building Work applicable?	True
Nature of Application	New Dwelling
Does the building/site have any cultural or heritage significance or is it a marae?	False
Is the site subject to natural or created hazards such as	False

WDC APPROVED

erosion, subsidence, flooding, slips, cut and fill or contamination?	
Financial assistance package (FAP) re-clad application - or claim under FAP scheme?	False
Is there an existing PIM?	False

Building Details

Building name:	New Dwelling with Attached Garage
Location of building within site/block number:	Lot 23, 10 Leicester Place, Springvale, Wanganui
Work type:	New
Year first constructed:	2017
Subdivision Lot Number:	
Subdivision Consent Number:	
Level/Unit number:	1
Number of Levels:	1
Current, lawfully established use:	Housing - Group dwelling
Floor area:	126

Owner Details

Are you acting on your own behalf?	False
Name of owner:	Mr Steve & Mrs Gay Robertson
Contact person:	Steve Robertson
Mailing address::	12 Bankwood Road, Chartwell, Hamilton 3210

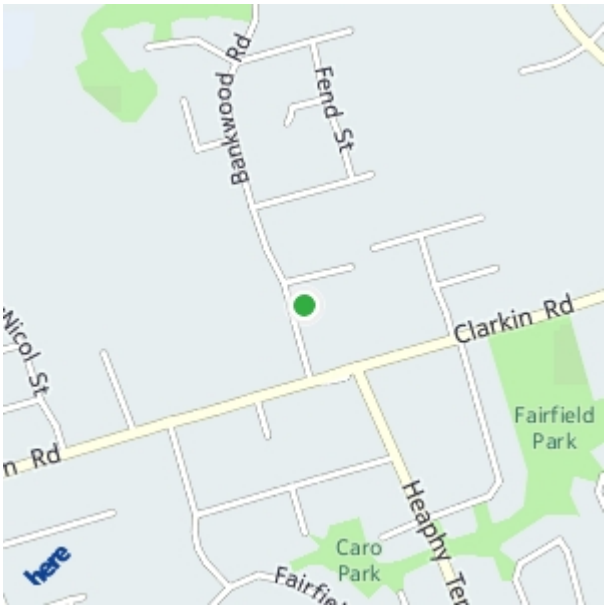

Open Google Maps

Street address/registered office:	
Phone Numbers:	
Primary contact:	07-8459243
Other contact:	
After hours:	
Facsimile:	
Email address:	gayplussteve@gmail.com
Website:	
Evidence of Ownership:	
Please select an evidence of ownership type and then upload the relevant file	Agreement for Sale and Purchase

25 Springvale Road CT 773126-cheaptitles.co.nz.pdf

WDC APPROVED

Agreement for Sale and Purchase.pdf

Agent Details

Is there an agent working on behalf of the applicant?	True
Name of agent:	Devon Homes
Contact person:	Marcelo Lapuz
Mailing address::	165 A Great North Road, Otamatea, Wangaui, 4501



Open Google Maps

Street address/registered office:	
Phone numbers:	
Primary contact:	06-3452393
Other contact:	
After hours	
Facsimile:	
Email address:	design@devonhomes.co.nz
Website:	
Relationship to owner:	Designer
I confirm that I am authorised to submit this application on behalf of the owner and a copy of this authorisation is attached to this application.	True

Authorisation.pdf

First Point of Contact

First point of contact for communications with the council/building consent authority:	Agent

Authorisation

Type your full name here:	Mracelo Lapuz
Date:	2017-03-02
Please specify the billing details for this application:	Agent

Project Details

The Project

Description of the building work in specific detail:	New Dwelling with Attached Garrage
List any building consents/PIMs previously issued for this project, if any	
Will the building work result in a change of use of the	False

WDC APPROVED

building?	
Estimated value of the building work on which the building levy will be calculated (including GST)	194000.00
What is the intended life of the building?	More than 50 years
Is a WDC water supply connection required?	True
Is a Wastewater connection required?	True
Is a Stormwater connection required?	True
Is there a requirement for a vehicle crossing?	False
Is there a new swimming pool or spa pool proposed for this project?	False
Is this application to erect a temporary building/structure?	False

Building Practitioners

Please specify the details of the Building Practitioners if known at the time of application.

Is there a Designer involved in this project?	True

Link to 2A form

Designer memorandun certificate.pdf

LBP/Reg number:	106897
Name:	Marcelo Lapuz
Design class:	Design 2
Company name:	Devon Homes
Address::	85 Springvale Road, Springvale, Whanganui 4501

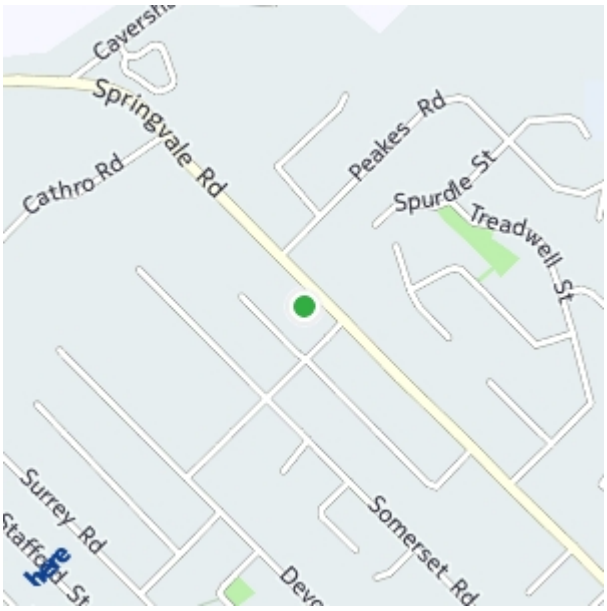

Open Google Maps

Primary contact:	06-3452393
Other contact:	
Email address:	design@devonhomes.co.nz
Type of practitioner:	Builder
LBP/Reg number:	126130
Licence class:	Carpentry
Practitioner name:	Edgardo Anusencion
Company name:	
Address:	
Primary contact:	
Other contact:	
Email address:	reuters@devonhomes.co.nz

WDC APPROVED

Building Code

Building Code Clauses

Select Applicable Building Code Clauses

For further information on the Building Code Clauses below, please visit the following website:
www.dbh.govt.nz/compliance-documents

B1 Structure True

Acceptable Solutions

Please select all that apply to your project

- NZS3604

Verification Method

Please select all applicable verification methods

Alternative Solutions, Waivers & Modifications

Where any project includes an alternative solution, waiver to the NZ Building Code or modification request to the NZ Building Code then full details will be required. Document these in detail and upload under the relevant heading.

Alternative solution?

Waiver/Modification?

Proposed Inspections

Proposed Inspector

B2 Durability True

Acceptable Solutions

Please select all that apply to your project

- NZS 3604

Verification Method

Please select all applicable verification methods

Alternative Solutions, Waivers and Modifications

Where any project includes an alternative solution, waiver to the NZ Building Code or modification request to the NZ Building Code then full details will be required. Document these in detail and upload under the relevant heading.

Alternative solution?

Waiver/Modification?

Proposed Inspections

Proposed Inspector

C1-C6 Fire Safety Classes False

D1 Access Routes True

Acceptable Solutions

Please select all that apply to your project

- D1/AS1

Alternative Solutions, Waivers and Modifications

Where any project includes an alternative solution, waiver to the NZ Building Code or modification request to the NZ Building Code then full details will be required. Document these in detail and upload under the relevant heading.

Alternative Solution?

Proposed Inspections

Proposed Inspector

D2 Mechanical Installation for Access False

E1 Surface Water True

Acceptable Solutions

Please select all that apply to your project

- E1/AS1

Verification Method

WDC APPROVED

Please select all applicable verification methods

Alternative Solutions, Waiver and Modifications

Where any project includes an alternative solution, waiver to the NZ Building Code or modification request to the NZ Building Code then full details will be required. Document these in detail and upload under the relevant heading.

Alternative Solution?

Waiver/Modification?

Proposed Inspections

Proposed Inspector

E2 External Moisture True

Acceptable Solutions

Please select all that apply to your project

- E2/AS1

Verification Method

Please select all applicable verification methods

Alternative Solutions, Waivers and Modifications

Where any project includes an alternative solution, waiver to the NZ Building Code or modification request to the NZ Building Code then full details will be required. Document these in detail and upload under the relevant heading.

Alternative Solution?

Waiver/Modification?

Proposed Inspections

Proposed Inspector

E3 Internal Moisture True

Acceptable Solutions

Please select all that apply to your project

- E3/AS1

Alternative Solutions, Waivers and Modifications

Where any project includes an alternative solution, waiver to the NZ Building Code or modification request to the NZ Building Code then full details will be required. Document these in detail and upload under the relevant heading.

Alternative Solution?

Waiver/Modification?

Proposed Inspections

Proposed Inspector

F1 Hazardous Agents on Site True

Acceptable Solutions

Please select all that apply to your project

- F1/AS1

Verification Method

Please select all applicable verification methods

Alternative Solutions, Waivers and Modifications

Where any project includes an alternative solution, waiver to the NZ Building Code or modification request to the NZ Building Code then full details will be required. Document these in detail and upload under the relevant heading.

Alternative Solution?

Waiver/Modification?

Proposed Inspections

Proposed Inspector

F2 Hazardous Building Materials True

Acceptable Solutions

Please select all that apply to your project

- F2/AS1

WDC APPROVED

Alternative Solutions, Waivers and Modifications

Where any project includes an alternative solution, waiver to the NZ Building Code or modification request to the NZ Building Code then full details will be required. Document these in detail and upload under the relevant heading.

Alternative Solution?

Waiver/Modification?

Proposed Inspections

Proposed Inspector

F3 Hazardous Substances and Processes	False
F4 Safety from Falling/Fencing of Swimming Pools Act	True

Acceptable Solutions

Please select all that apply to your project

- F4/AS1

Alternative Solutions, Waivers and Modifications

Where any project includes an alternative solution, waiver to the NZ Building Code or modification request to the NZ Building Code then full details will be required. Document these in detail and upload under the relevant heading.

Alternative Solution?

Waiver/Modification?

Proposed Inspections

Proposed Inspector

F5 Construction and Demolition Hazards	False
F6 Visibility in Escape Routes	False
F7 Warning Systems	True

Acceptable Solutions

Please select all that apply to your project

- F7/AS1

Alternative Solutions, Waivers and Modifications

Where any project includes an alternative solution, waiver to the NZ Building Code or modification request to the NZ Building Code then full details will be required. Document these in detail and upload under the relevant heading.

Alternative Solution?

Waiver/Modification?

Proposed Inspections

Proposed Inspector

F8 Signs	False
F9 Restricting access to residential pools	False
G1 Personal Hygiene	True

Acceptable Solutions

Please select all that apply to your project

- G1/AS1

Alternative Solutions, Waivers and Modifications

Where any project includes an alternative solution, waiver to the NZ Building Code or modification request to the NZ Building Code then full details will be required. Document these in detail and upload under the relevant heading.

Alternative Solution?

Waiver/Modification?

Proposed Inspections

Proposed Inspector

G2 Laundering	True

Acceptable Solutions

Please select all that apply to your project

- G2/AS1

WDC APPROVED

Alternative Solutions, Waivers and Modifications

Where any project includes an alternative solution, waiver to the NZ Building Code or modification request to the NZ Building Code then full details will be required. Document these in detail and upload under the relevant heading.

Alternative Solution?

Waiver/Modification?

Proposed Inspections

Proposed Inspector

G3 Food Preparation and Prevention of Contamination True

Acceptable Solutions

Please select all that apply to your project

- G3/AS1

Alternative Solutions, Waivers and Modifications

Where any project includes an alternative solution, waiver to the NZ Building Code or modification request to the NZ Building Code then full details will be required. Document these in detail and upload under the relevant heading.

Alternative Solution?

Waiver/Modifications?

Proposed Inspections

Proposed Inspector

G4 Ventilation True

Acceptable Solutions

Please select all that apply to your project

- G4/AS1

Verification Methods

Please select all that apply to your project

Alternative Solutions, Waivers and Modifications

Where any project includes an alternative solution, waiver to the NZ Building Code or modification request to the NZ Building Code then full details will be required. Document these in detail and upload under the relevant heading.

Alternative Solution?

Waiver/Modification?

Proposed Inspections

Proposed Inspector

G5 Interior Environment True

Acceptable Solutions

Please select all that apply to your project

- G5/AS1

Verification Methods

Please select all that apply to your project

Alternative Solutions, Waivers and Modifications

Where any project includes an alternative solution, waiver to the NZ Building Code or modification request to the NZ Building Code then full details will be required. Document these in detail and upload under the relevant heading.

Alternative Solution?

Waiver/Modification?

Proposed Inspections

Proposed Inspector

G6 Airborne Impact Sound False

G7 Natural Light True

Acceptable Solution

Please select all that apply to your project

- G7/AS1

WDC APPROVED

Verification Method

Please select all that apply to your project

Alternative Solutions, Waivers and Modifications

Where any project includes an alternative solution, waiver to the NZ Building Code or modification request to the NZ Building Code then full details will be required. Document these in detail and upload under the relevant heading.

Alternative Solution?

Waiver/Modifications

Proposed Inspections

Proposed Inspector

G9 Electricity True

Acceptable Solutions

Please select all that apply to your project

- G9/AS1

Verification Methods

Please select all that apply to your project

Alternative Solutions, Waivers and Modifications

Where any project includes an alternative solution, waiver to the NZ Building Code or modification request to the NZ Building Code then full details will be required. Document these in detail and upload under the relevant heading.

Alternative Solution?

Waiver/Modification?

Proposed Inspections

By certification only

G10 Piped Services True

Acceptable Solutions

Please select all that apply to your project

- G10/AS1

Verification Methods

Please select all that apply to your project

Alternative Solutions, Waivers and Modifications

Where any project includes an alternative solution, waiver to the NZ Building Code or modification request to the NZ Building Code then full details will be required. Document these in detail and upload under the relevant heading.

Alternative Solution?

Waiver/Modification?

Proposed Inspections

By certification only

G11 Gas as an Energy Source True

Acceptable Solutions

Please select all that apply to your project

- G11/AS1

Alternative Solutions, Waivers and Modifications

Where any project includes an alternative solution, waiver to the NZ Building Code or modification request to the NZ Building Code then full details will be required. Document these in detail and upload under the relevant heading.

Alternative Solutions?

Waiver/Modifications?

Proposed Inspections

By certification only

G12 Water Supplies True

Acceptable Solutions

WDC APPROVED

Please select all that apply to your project

- G12/AS1

Verification Method

Please select all that apply to your project

Alternative Solutions, Waivers and Modifications

Where any project includes an alternative solution, waiver to the NZ Building Code or modification request to the NZ Building Code then full details will be required. Document these in detail and upload under the relevant heading.

Alternative Solution?

Waiver/Modification?

Proposed Inspections

Proposed Inspector

G13 Foul Water	True

Acceptable Solutions

Please select all that apply to your project

- G13/AS1

Verification Methods

Please select all that apply to your project

Alternative Solutions, Waivers and Modifications

Where any project includes an alternative solution, waiver to the NZ Building Code or modification request to the NZ Building Code then full details will be required. Document these in detail and upload under the relevant heading.

Alternative Solution?

Waiver/Modification?

Proposed Inspections

Proposed Inspector

H1 Energy Efficiency	True

Acceptable Solutions

Please select all that apply to your project

- H1/AS1

Verification Methods

Please select all that apply to your project

Alternative Solutions, Waivers and Modifications

Where any project includes an alternative solution, waiver to the NZ Building Code or modification request to the NZ Building Code then full details will be required. Document these in detail and upload under the relevant heading.

Alternative Solution?

Waiver/Modification?

Proposed Inspections

Proposed Inspector

Compliance Schedule

Compliance Schedule

Are there Specified Systems?	There are no specified systems in the building

Attachments

Lodged Plans

Site Plans, Drainage Plans, Floor Plans, Elevations, Cross sections etc.

Robertson Plan & Details.pdf

General Specifications

ARDEX WPM 001 Datasheet.pdf

Elephant board.pdf

WDC APPROVED

Robertson Specs.pdf

Product literature

Technical Reports

Fire reports

Geotech summary report

Producer statements and engineering calcs

Robertson QuickBrace.pdf

FN93166C - PS1.pdf

FN93166C.pdf

Specific stormwater design

On-site effluent design

H1 Calcs / compliance reports

GIB Ezy Brace documents

Design IT calcs

Ribraft

Other technical documents

Infrastructure Bond.pdf

WDC APPROVED

Checklist

Reference Number	REF170302766
Submitted On	03/03/2017 08:27
Submitted By	Marcelo Lapuz
Status	

Office Use Only

If this is an alteration to an approved consent then the existing consent number (e.g. BCON16/1234) MUST be entered correctly as is shown in P&R	
Is this an alteration to an approved consent?	False
PIM Required?	BCon and PIM
Compliance Schedule?	N/A
Restricted Building Work?	Yes
RBW numbers correct and current?	
Building Category	New Residential Dwelling - $100001 - $200000
DBH Category	R1
Statistics NZ Building Type	New building(exclude domestic garages & outbldgs)
Primary Usage	Single Detached Residential
Description	New Residential Dwelling with Attached Garage 126m2

General Documentation Required

Owner authorisation provided	Pass
Form 2A Certificate of Design Work	Pass
Are you applying for owner/builder exemption? If yes, the appropriate documentation including Form 2B is to be supplied	N/A
Index provided for plans and specifications	Pass
All plans to be to a recognised metric scale and drawn in black ink (not pencil)	Pass
All documents including photocopies must be legible	Pass
All plans are to be titled and dated (or version number)	Pass
Have all Licensed Building Practitioners been identified, if applicable	Pass
Vetting Officer General Documentation Notes	

Legal Documentation Required

Full, current (less than three months old) Certificate of Title and survey plan is required for all new dwellings and external building work. All consent notices, building line restrictions, encumbrances and easement instruments. NB: If a cross lease, please also provide a flats plan.	Pass
Sale and purchase agreement with settlement date provided (if applicable)	N/A
Full copy of lease agreement (if applicant is lessee)	N/A
WDC Rating information supplied	N/A
Vetting Officer Legal Documentation Notes	

Site/Location Plan

Site/Location Plan

Site Management and Protection of Public

Site Management and Protection of Public

WDC APPROVED

Retaining Walls/Site Works

Retaining Walls/Site Works

Foundation Plan

Foundation Plan

Floor Plan

Floor Plan

Framing Plan/Bracing Plan

Framing Plan/Bracing Plan

Details

Details

Roof Plan

Roof Plan

Specific Design Engineering

Specific Design Engineering

Elevations

Elevations

Specifications & Other Documentation

Specifications & Other Documentation

Plumbing & Drainage

Plumbing & Drainage

Protection from Fire

Protection from Fire

Compliance Schedule

Compliance Schedule

Accessibility Assessment

Accessibility Assessment

Hazardous Substances & Processes

Hazardous Substances & Processes

Food Premises

Food Premises

Weathertightness

Weathertightness

Swimming Pool/Spa Pool

Swimming Pool/Spa Pool

Solid Fuel Heater

Solid Fuel Heater

Solar Heating

Solar Heating

Demolition/Removal

Demolition/Removal

Property Number	69870
Initials of Vetting Officer	BN
Time taken to vet application:	60

WDC APPROVED

Practitioners

Role Type	Applicant
New or Existing Name?	Existing
Name Number	92764
Email Address	
Company Or Individual	
First Name	
Last Name	
New Email	
Role Type	Owner
New or Existing Name?	New
Name Number	
Email Address	
Company or Individual	Individual
First Name	Steve
Last Name	Robertson
Email Address	gayplussteve@gmail.com
Role Type	Owner
New or Existing Name?	New
Name Number	
Email Address	
Company or Individual	Individual
First Name	Gay
Last Name	Robertson
Email Address	gayplussteve@gmail.com
Role Type	Designer
New or Existing Name?	Existing
Name Number	1049748
Email Address	
Company Or Individual	
First Name	
Last Name	
New Email	
Role Type	Builder
New or Existing Name?	Existing
Name Number	1060725
Email Address	
Company Or Individual	
First Name	
Last Name	
New Email	

Referrals

Planners	True
Bond Agreement (IG) applicable	True
Construction CFPU required?	False
Building	True
Fire Design	False

WDC APPROVED

Plumbing & Drainage	True
Health	False
Dangerous Goods	False
Water Supply (ref IG)	True
Drainage (ref IG)	True
Roading (ref IG)	False
Vehicle Crossing (ref IG)	False
Other Referral	False
Peer Review	False
Comment from Vetting Officer	Initial application was declined. Further information has been supplied. BN

Result

Overall Result	Pass

WDC APPROVED

Infrastructure Bond and Acceptance of Liability Agreement
Streets Infrastructure Bylaw 2009
Form IG-001

Wanganui District Council

Agreement details

Building Consent ✓ **Resource Consent** ○ *(Please tick)*

I MARCELO LAPUZ
(applicant's full name)

DEVON HOMES
Company name (if applicable)

of 165-A GREAT NORTH ROAD, WANGANUI
(address of applicant)

3452393 *Phone*

design@devonhomes.co.nz *Email*

give notice that I will be undertaking work at:

10 LEICESTER PLACE, SPRINGVALE, WANGANUI
(address of where work is to be carried out)

and that I agree to abide fully with the following conditions:

1. Prior to any work being undertaken I will request Council to undertake an initial inspection of its infrastructure assets located in the road corridor to identify any pre-existing damage;
2. At the completion of the scheduled work I will request Council to undertake a final inspection of its infrastructure assets to determine whether any damage has occurred since the initial inspection;
3. To take responsibility for the building related care of infrastructure assets for the duration of the above building and/or resource consents;
4. To pay a non-refundable inspection and administration fee of **$200.00**;
5. To pay a refundable Infrastructure Bond of **$1,500.00**;
6. That the refundable Infrastructure Bond can be used by Council to offset the cost of damaged assets relating to other building or resource consents that I am also responsible for;
7. To pay the full cost of making good any damage caused to Council's infrastructure assets to an appropriate standard as determined by Council;
8. The refund of the Infrastructure Bond is subject to the making good of any damage to Council's infrastructure assets (as determined by Council) within a period of 4 (four) weeks from the date of Council's written notification to above address.

Note: Council should be contacted at the completion of the building work so that it may undertake an inspection of its infrastructure assets to confirm that no damage has occurred. *(Please telephone 06 349 0001 to book an inspection)*

Signature

MARCELO LAPUZ — 2/3/17

Name of person signing: *(please print clearly)* — Dated

OFFICE USE ONLY

Preferred Applicant Yes ○ No ○ *(Please tick)*

Wanganui District Council, 101 Guyton Street, PO Box 637, Wanganui 4540
Phone 06-349001, Fax 06-349 0000
Email: wdc@wanganui.govt.nz, web: www.wanganui.govt.nz

Please turn over

WDC APPROVED

Please Read IMPORTANT INFORMATION ON THE INFRASTRUCTURE BOND

Explanation

1. The Wanganui District Council has significant infrastructure assets in its road corridor. Damage to those assets from building works can come at a cost to the ratepayers of the Wanganui District.
2. The purpose of the Infrastructure Bond is to encourage the applicant to ensure that the infrastructure assets are not damaged. Further, in the event of damage, the infrastructure bond will ensure that the cost of repairing rests with the party responsible for its damage.
3. **Damage includes but is not limited to the following**: damage to footpaths, kerbing and channel, road surface, street furniture, tobies, trees, berms and other Council assets in the road corridor.
4. The Infrastructure Bond applies to all building consents (and/or resource consents) for demolition, removal, relocation and construction of buildings, and structures (including commercial) in the urban zone.

Review of Bond Amount

5. Pursuant to a Resolution of the Wanganui District Council (17 June 2008) a builder who is a preferred applicant may apply for an exemption from paying an infrastructure bond on each consent. The resolution states: *"That the Chief Executive has delegated authority to waiver the refundable bond amount for builders with multiple consents".*
6. An application for waiver of the Bond amount can be made on the appropriate form obtainable from the Council building at 101 Guyton Street, Wanganui.
7. To find out if you are eligible for a waiver of the bond amount, please talk to a member of the Customer Services team in the first instance.

OFFICE USE ONLY

Date received		*IBR No:*	
Receipt No:		*Received by:*	
		(print name)	

COMMENTS

WDC APPROVED

View Instrument Details

Toitu te Land whenua Information New Zealand

Instrument No.	10635291.4
Status	Registered
Date & Time Lodged	02 Dec 2016 16:34
Lodged By	Robertson, David Andrew
Instrument Type	Consent Notice under s221(4)(a) Resource Management Act 1991

Affected Computer Registers	Land District
761964	Wellington
761965	Wellington
761966	Wellington
761967	Wellington
761968	Wellington
761969	Wellington
761970	Wellington
761971	Wellington
761972	Wellington
761973	Wellington

Annexure Schedule: Contains 1 Page.

Signature

Signed by David Andrew Robertson as Territorial Authority Representative on 02/12/2016 04:19 PM

***** End of Report *****

© Copyright: Land Information New Zealand

WDC APPROVED

Identifier **773126**

Q, over part Lot 18 DP 500432 marked R, over part Lot 19 DP 500432 marked S and over part Lot 20 DP 500432 marked T all on DP 500432 created by Easement Instrument 10635291.8 - 2.12.2016 at 4:34 pm

Appurtenant to Lot 11-12 DP 500432 is a right to drain water and appurtenant to Lot 15 DP 500432 is a right to drain water and sewage created by Easement Instrument 10635291.8 - 2.12.2016 at 4:34 pm

The easements created by Easement Instrument 10635291.8 are subject to Section 243 (a) Resource Management Act 1991

Subject to a right of way, a right to drain water and sewage and a right to convey water, gas, telecommunications and computer media over part Lot 14 DP 500432 marked N, over part Lot 15 DP 500432 marked O, over part Lot 16 DP 500432 marked P, over part Lot 17 DP 500432 marked Q, over part Lot 18 DP 500432 marked R, over part Lot 19 DP 500432 marked S, over part Lot 20 DP 500432 marked T, over part Lot 24 DP 500432 marked W and over part Lot 26 DP 500432 marked Y all on DP 500432 created by Easement Instrument 10635291.9 - 2.12.2016 at 4:34 pm

Appurtenant to Lot 14-20, 24, 26 DP 500432 is a right of way, a right to drain water and sewage and a right to convey water, gas, telecommunications and computer media created by Easement Instrument 10635291.9 - 2.12.2016 at 4:34 pm

The easements created by Easement Instrument 10635291.9 are subject to Section 243 (a) Resource Management Act 1991

4

WHANGANUI DISTRICT COUNCIL
Te Kaunihera a Rohe o Whanganui

REUTERS DEVELOPMENT LIMITED, 25 SPRINGVALE ROAD, WHANGANUI: LT 500432

CERTIFICATE PURSUANT TO SECTION 221 OF THE

RESOURCE MANAGEMENT ACT 1991

The Whanganui District Council has granted a Resource Consent under Section 104A of the Resource Management Act 1991 to Reuters Developments Limited being a subdivision of Lots 1 & 2 DP 474904, 25 Springvale Road, Whanganui.

The subdivision is subject to the following conditions:

1. A Consent Notice shall be registered against the Certificates of Title for all new lots created with the exclusion of Lot 35 & 36:

   'Prior to construction of a building on the lot the developer shall appoint a chartered professional engineering, experienced in storm water, geotechnical investigations and foundation design, who will provide building site certification for the lot. This certificate shall specify suitable foundation types for the building.'

This Consent Notice shall be registered as appropriate against the Computer Freehold Registers issued for all new lots created with the exclusion of Lot 35 & 36 of LT 502171 being a subdivision of Lots 1 & 2 DP 474904, 25 Springvale Road in terms of the Land Transfer Act 1952.

Dated at Whanganui this 09th day of November 2016.

Johanna Verhoek
Resource Management Planner

(Acting pursuant to a delegated authority from the
Principal Administrative Officer).

WDC APPROVED

COMPUTER FREEHOLD REGISTER
UNDER LAND TRANSFER ACT 1952

Search Copy

R.W. Muir
Registrar-General
of Land

Identifier	**773125**
Land Registration District	**Wellington**
Date Issued	09 February 2017

Prior References
761973

Estate	Fee Simple
Area	461 square metres more or less
Legal Description	Lot 23 Deposited Plan 500432

Proprietors
Stephen Andrew Robertson and Gaylene Irene Robertson

Interests

Subject to Part IVA Conservation Act 1987

Subject to Section 11 Crown Minerals Act 1991, excluding the coal and other minerals which remain in cancelled Certificates of Title WN432/154

10635291.4 Consent Notice pursuant to Section 221 Resource Management Act 1991 - 2.12.2016 at 4:34 pm

Land Covenant in Easement Instrument 10635291.5 - 2.12.2016 at 4:34 pm

Subject to a right (in gross) to convey electricity over part Lot 23 DP 500432 marked V on DP 500432 in favour of Powerco Limited created by Easement Instrument 10635291.6 - 2.12.2016 at 4:34 pm

The easements created by Easement Instrument 10635291.6 are subject to Section 243 (a) Resource Management Act 1991

Subject to a right of way, a right to drain water and sewage and a right to convey water, gas, telecommunications and computer media over part Lot 23 DP 500432 marked V on DP 500432 created by Easement Instrument 10635291.9 - 2.12.2016 at 4:34 pm

Appurtenant hereto is a right of way, a right to drain water and sewage and a right to convey water, gas, telecommunications and computer media created by Easement Instrument 10635291.9 - 2.12.2016 at 4:34 pm

The easements created by Easement Instrument 10635291.9 are subject to Section 243 (a) Resource Management Act 1991

Received Tuesday, 4 April 2017

WDC APPROVED

Identifier **773125**

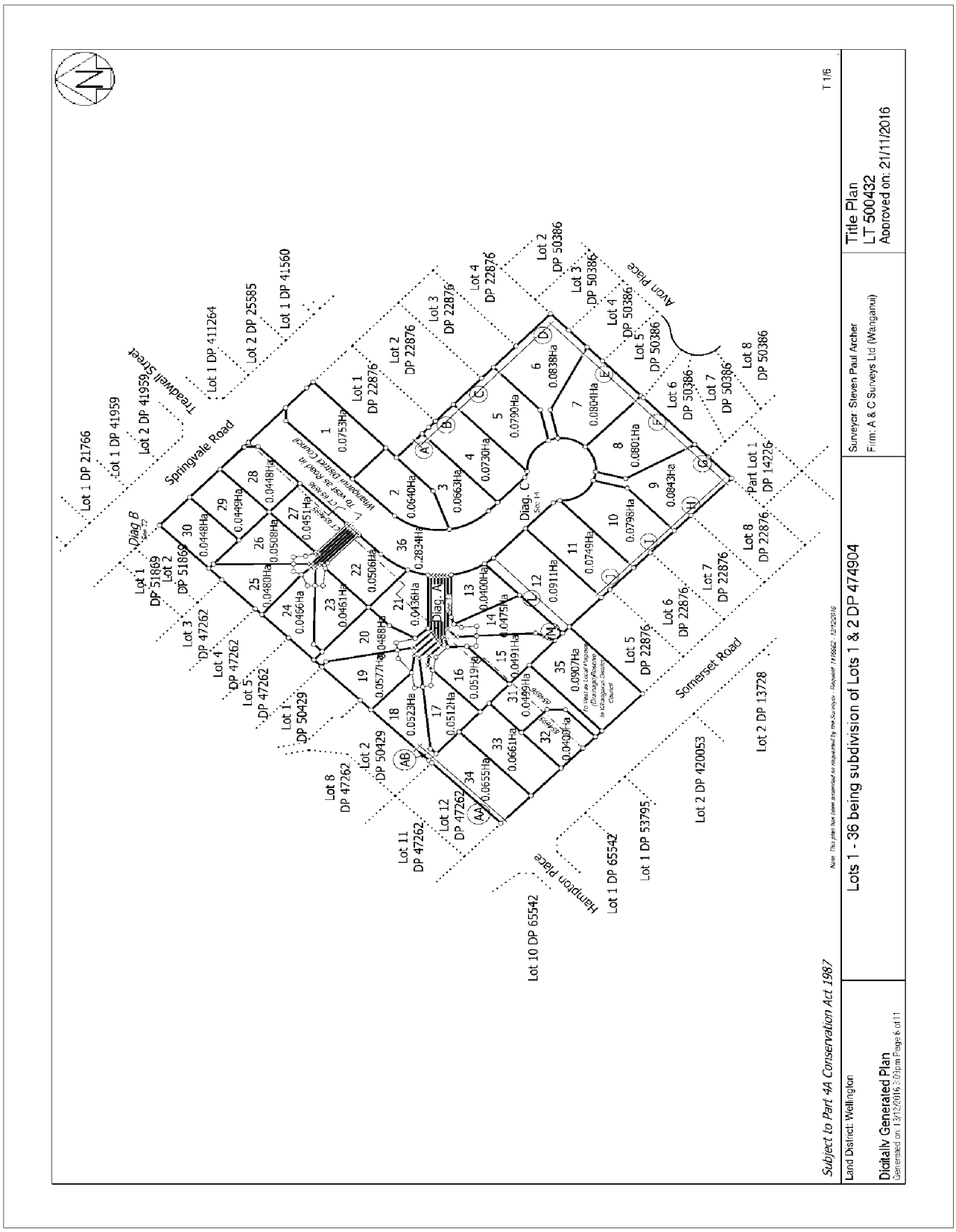

Received Tuesday, 4 April 2017

WDC APPROVED

DEVON Homes
More than just a house

3 March 2017

To Wanganui District Council

We authorise Marcelo Lapuz, our LBP Designer, to act on our behalf with the Wanganui District Council on Lot 23, 10 Leicester Place, Springvale, Wanganui.

Signed

B. Reuters

.....

Bernard Reuters
Governing Director

Reuters Construction Ltd.
Trading as ***DEVON Homes***
165A Great North Road, Wanganui 4501, New Zealand
Telephone: 06-345 2393, Facsimile: 06-345 2165, Email: reuters@devonhomes.co.nz
www.devonhomes.co.nz

DEVON Homes
More than just a house

Proud to be
CB
Member
Certified Builders

WDC APPROVED

Memorandum from licensed building practitioner: Certificate of design work

Section 45 and section 30C, Building Act 2004

Please fill in the form as fully and correctly as possible.

If there is insufficient room on the form for requested details, please continue on another sheet and attach the additional sheet(s) to this form.

THE BUILDING	
Street address: 10 LEICESTER PLACE	
Suburb: SPRINGVALE	
Town/City: WHANGANUI	Postcode: 4501

THE OWNER(S)	
Name(s): MR STEVE & MRS GAY ROBERTSON	
Mailing address: 12 BANKWOOD ROAD	
Suburb: CHARTWELL	PO Box/Private Bag:
Town/City: HAMILTON	Postcode:
Phone number: 021 471 445	Email address: gayplussteve@gmail.com

WDC APPROVED

BASIS FOR PROVIDING THIS MEMORANDUM

I am providing this memorandum in my role as the: Please tick the option that applies ✓

- ○ **sole** designer of all of the RBW design outlined in this memorandum – I carried out **all** of the RBW design work myself – no other person will be providing any additional memoranda for the project
- ✓ **lead** designer who carried out some of the RBW design myself but also supervised other designers – this memorandum covers their RBW design work as well as mine, and **no other** person will be providing any additional memoranda for the project
- ○ **lead** designer for all but specific elements of RBW – this memorandum only covers the RBW design work that I carried out or supervised and the **other** designers will provide their own memorandum relating to their specific RBW design
- ○ **specialist** designer who carried out specific elements of RBW design work as outlined in this memorandum – other designers will be providing a memorandum covering the remaining RBW design work

IDENTIFICATION OF DESIGN WORK THAT IS RESTRICTED BUILDING WORK (RBW)

I MARCELO LAPUZ carried out / supervised the following design work that is restricted building work

PRIMARY STRUCTURE: B1

Design work that is RBW	Description of RBW	Carried out or supervised	Reference to plans and specifications
Tick ✓ if included Cross ⊗ if excluded	If appropriate, provide details of the RBW	Tick ✓ whether you carried out this design work or supervised someone else carrying out this design work	If appropriate, specify references
All RBW design work relating to B1 ⊗	N/A	○ Carried out ○ Supervised	N/A
Foundations and subfloor framing ✓	CONCRETE FLOOR SLAB (NZS 3604 - 2011)	✓ Carried out ○ Supervised	SHT 5 & 6 SECTION FOUNDATION PLAN

WDC APPROVED

Design work that is RBW		Description of RBW	Carried out or supervised	Reference to plans and specifications
Tick ✓ if included. Cross ✗ if excluded		If appropriate, provide details of the RBW	Tick ✓ whether you carried out this design work or supervised someone else carrying out this design work	If appropriate, specify references
Walls	✓	TIMBER FRAMED WALL (NZS 3604-2011)	✓ Carried out ○ Supervised	SHT 5 SECTION
Roof	✓	SANGHAIL ROOF TRUSSES	✓ Carried out ○ Supervised	SHT 5 SECTION
Columns and beams	✓	TIMBER POST BEAMS & LINTELS	✓ Carried out ○ Supervised	SHT 3 & 4 ELEVATIONS SET-OUT PLAN
Bracing	✓	ELEPHANT BOARD WALL BRACING (NZS 3604-2011)	✓ Carried out ○ Supervised	SHT 8 BRACING PLAN SCHEDULE
Other	✗	N/A	○ Carried out ○ Supervised	N/A

WDC APPROVED

Design work that is RBW	Description of RBW	Carried out or supervised	Reference to plans and specifications
Tick ✓ if included. Cross ✗ if **excluded**	If appropriate, provide details of the RBW	Tick ✓ whether you carried out this design work or supervised someone else carrying out this design work	If appropriate, specify references
EXTERNAL MOISTURE MANAGEMENT SYSTEMS: E2			
All RBW design work relating to E2 ✗	N/A	○ Carried out ○ Supervised	N/A
Damp proofing ✓	DAMP PROOF COURSE & MEMBRANE	✓ Carried out ○ Supervised	SHT 5 & 13 SECTION TYPICAL DET.
Roof cladding or roof cladding system ✓	COLOUR TILE ROOFING ON SELF SUPPORTING BUILDING PAPER	✓ Carried out ○ Supervised	SHT 5 & 10 SECTION ROOF PLAN
Ventilation system (for example, subfloor or cavity) ✓	MASONRY BRICK VENEER ON 50mm CAVITY	✓ Carried out ○ Supervised	SHT 3 ELEVATIONS
Wall cladding or wall cladding system ✓	MASONRY BRICK VENEER WALL CLADDING	✓ Carried out ○ Supervised	SHT 3 ELEVATIONS
Waterproofing ✓	ARDEX WATER PROOFING MEMBRANE	✓ Carried out ○ Supervised	SHT 12 TYPICAL DETAILS
Other ✗	N/A	○ Carried out ○ Supervised	N/A

WDC APPROVED

Design work that is RBW	Description of RBW	Carried out or supervised	Reference to plans and specifications
Tick ✓ if included. Cross ✗ if excluded	If appropriate, provide details of the RBW	Tick ✓ whether you carried out this design work or supervised someone else carrying out this design work	If appropriate, specify references
FIRE SAFETY SYSTEMS: C1 - C6			
Emergency warning systems Evacuation and fire service operation systems Suppression or control systems Other	✓ SMOKE ALARM	✓ Carried out ○ Supervised	SHT 7 ELECTRICAL LAYOUT

Note: The design of fire safety systems is only restricted building work when it involves small-to-medium apartment buildings as defined by the Building (Definition of Restricted Building Work) Order 2011.

WAIVERS AND MODIFICATIONS

Waivers or modifications of the Building Code are required. ○ Yes ✓ No

If Yes, provide details of the waivers or modifications below:

Clause	Waiver/modification required
List relevant clause numbers of building code	Specify nature of waiver or modification of building code required

WDC APPROVED

ISSUED BY

Name and contact details of the licensed building practitioner who is licensed to carry out or supervise design work that is restricted building work.

Name: MARCELO LAPUZ	LBP or Registration number: BP106807
The practitioner is a: ☑ Design LBP ○ Registered architect ○ Chartered professional engineer	
Design Entity or Company (optional): DEVON HOMES	
Mailing address (if different from below): 165-A GREAT NORTH ROAD	
Street address/Registered office:	
Suburb: OTAMATEA	Town/City: WHANGANUI
PO Box/Private Bag:	Postcode: 4501
Phone number:	Mobile: 0210239 8523
After hours:	Fax:
Email address: design@devonhomes.co.nz	Website:

DECLARATION

I MARCELO LAPUZ LBP, state that I have applied the skill and care reasonably required of a competent design professional in carrying out or supervising the Restricted Building Work (RBW) described in this form, and that based on this, I also state that the RBW:

- Complies with the building code, or
- ~~Complies with the building code subject to any waiver or modification of the building code recorded on this form~~

Signature: 

Date: 2-3-17

WDC APPROVED

Scala Penetrometer Test Sheet

Our Ref: **17019.3**

Project Name: Steve & Gay Robertson

Project Location: 10 Liecester Place, Springvale

Date Tested: 30 March 2017
Time Tested: 11:00 AM
Tested By: David
Report Date: 30 March 2017

Tests: NZS4402:1986 Test 6.5.2 Hand Method Using a Scala Penetrometer

Test Hole (Blows / 100mm : Bearing Capacity (Kpa)

Depth (mm)	BH1 Blows per 100mm	BH1 Safe Bearing Capacity (Kpa)	Blows per 100mm	Safe Bearing Capacity (Kpa)	Blows per 100mm	Safe Bearing Capacity (Kpa)
100	9	230				
200	9	230				
300	6	175				
400	2	70				
500	2	70				
600	3	100				
700	5	150				
800	8	210				
900	13	280				
1000	12	270				
1100	14	300				
1200	12	270				
1300	18	350				
1400						
1500						
1600						
1700						
1800						
1900						
2000						
2100						
2200						
2300						
2400						
2500						

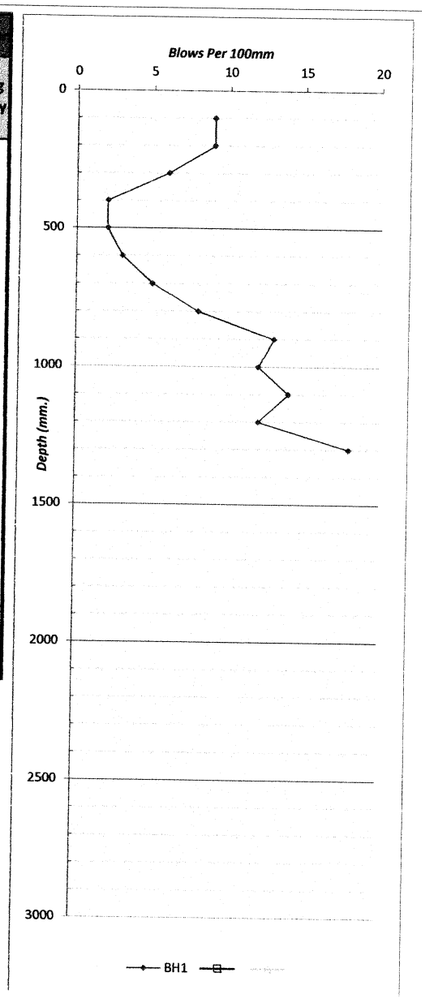

Test Location Diagragms: Attached

Remarks: upper layers dense sand with small stones
soft (peat ?) layer 300/500 depth
then dense sand.

Received Tuesday, 4 April 2017

WDC APPROVED

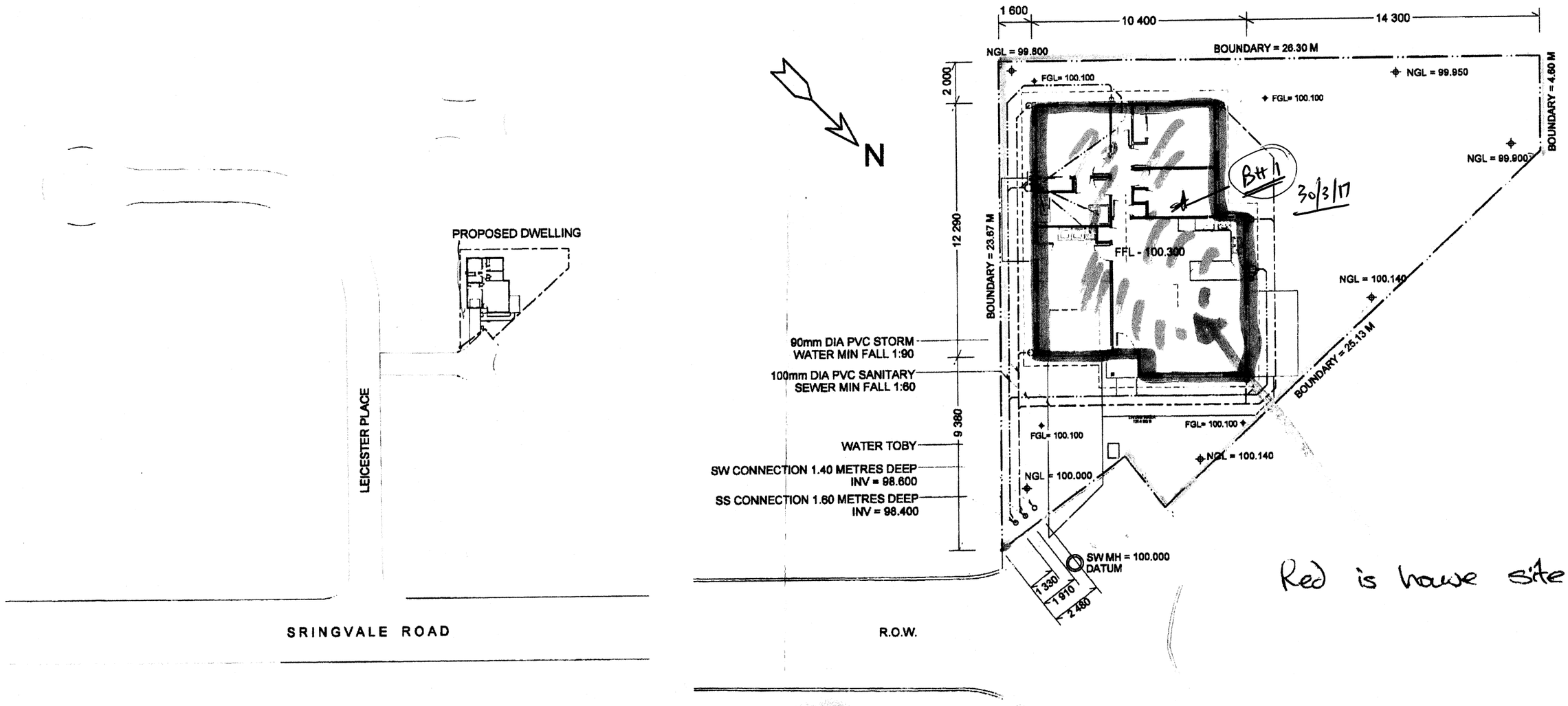

Red is house site

LOCATION PLAN

SITE PLAN

SITE AREA:	461	SQ M
40% SITE COVERAGE	184.4	SQ M
TOTAL AREA OF PROPOSED DWELLING	126	SQ M

PROPOSED RESIDENCE FOR

MR STEVE & MRS GAY ROBERTSON

10 LEICESTER PLACE, SPRINGVALE, WANGANUI

LOCATION PLAN
SITE PLAN

Scale:	Sheet No.
1:200	1
Date: 23 FEB 2017	Revision
Job No.	

No	Dates	Amendments
a	6 MAR 2017	REVISED LOCATION PLAN
b		
c		
d		
e		
f		

Notes:-

DEVON HOMES
REUTERS CONSTRUCTION LTD
185 A, GREAT NORTH ROAD, WANGANUI NEW ZEALAND
PHONE: +64-6-3452393 FA X: +64-6-3452165
EMAIL: reuters@devonhomes.co.nz http://www.devonhomes.co.nz

These plans are the copyright of REUTERS CONSTRUCTIONS LTD

Received Tuesday, 4 April 2017

WDC APPROVED

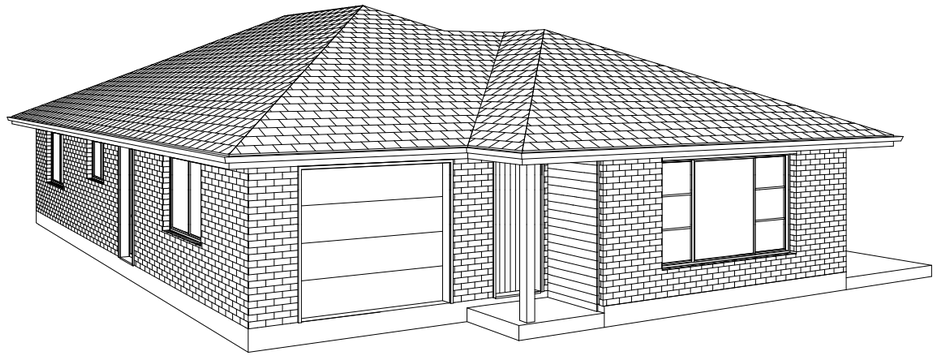

PROPOSED RESIDENCE FOR
MR STEVE & MRS GAY ROBERTSON
10 LEICESTER PLACE, SPRINGVALE, WANGANUI, NEW ZEALAND

TABLE OF CONTENTS

1. LOCATION PLAN / SITE PLAN
2. FLOOR PLAN
3. ELEVATIONS
4. SET-OUT PLAN
5. SECTION
6. FOUNDATION PLAN
7. ELECTRICAL LAYOUT
8. BRACING PLAN
9. DRAINAGE PLAN
10. ROOF PLAN
11. TYPICAL DETAILS
12. TYPICAL DETAILS
13. TYPICAL DETAILS

BUILDERS:
DEVON HOMES
REUTERS CONSTRUCTION LTD.

165A, GREAT NORTH ROAD,
WANGANUI,
NEW ZEALAND.
PHONE: +64-6-3452393
FAX: +64-6-3452165
EMAIL: reuters@devonhomes.co.nz
HTTP://www.devonhomes.co.nz

WDC APPROVED

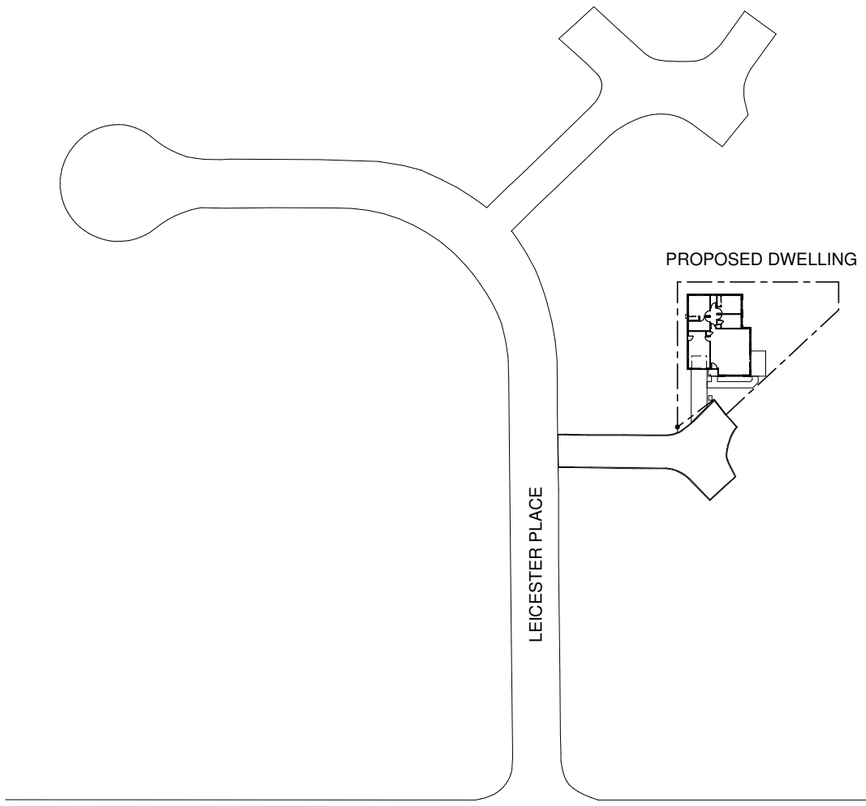

LOCATION PLAN

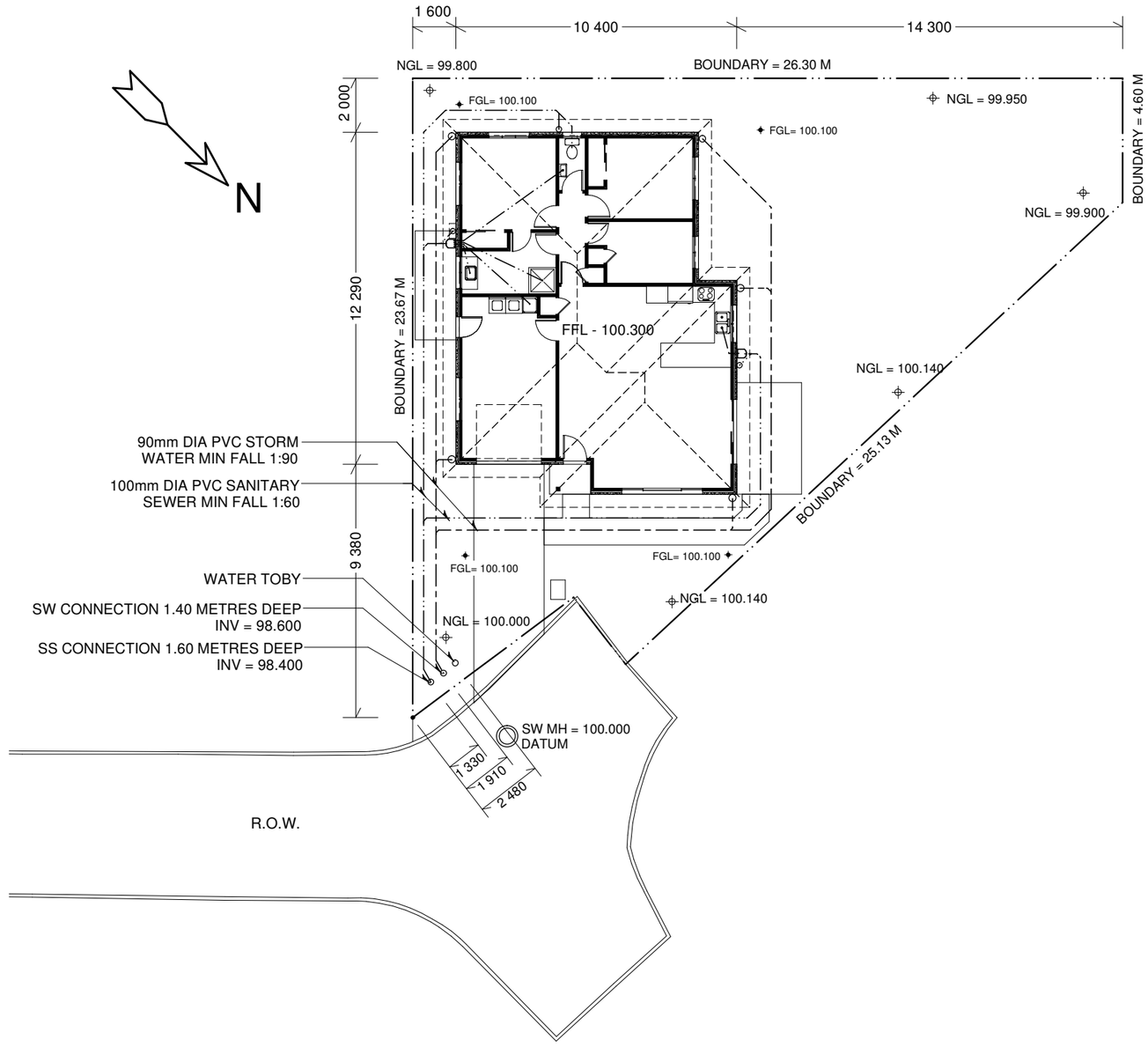

SITE PLAN

SITE AREA:	461	SQ M
40% SITE COVERAGE	184.4	SQ M
TOTAL AREA OF PROPOSED DWELLING	126	SQ M

PROPOSED RESIDENCE FOR

MR STEVE & MRS GAY ROBERTSON

10 LEICESTER PLACE, SPRINGVALE, WANGANUI

LOCATION PLAN
SITE PLAN

Scale:	Sheet No.
1:200	1
Date: 23 FEB 2017	Revision
Job No.	

No	Dates	Amendments
a	6 MAR 2017	REVISED LOCATION PLAN
b		
c		
d		
e		
f		

Notes:-

DEVON HOMES
REUTERS CONSTRUCTION LTD
165 A, GREAT NORTH ROAD, WANGANUI NEW ZEALAND
PHONE: +64-6-3452393 FA X: +64-6-3452165
EMAIL: reuters@devonhomes.co.nz http://www.devonhomes.co.nz

These plans are the copyright of REUTERS CONSTRUCTIONS LTD

WDC APPROVED

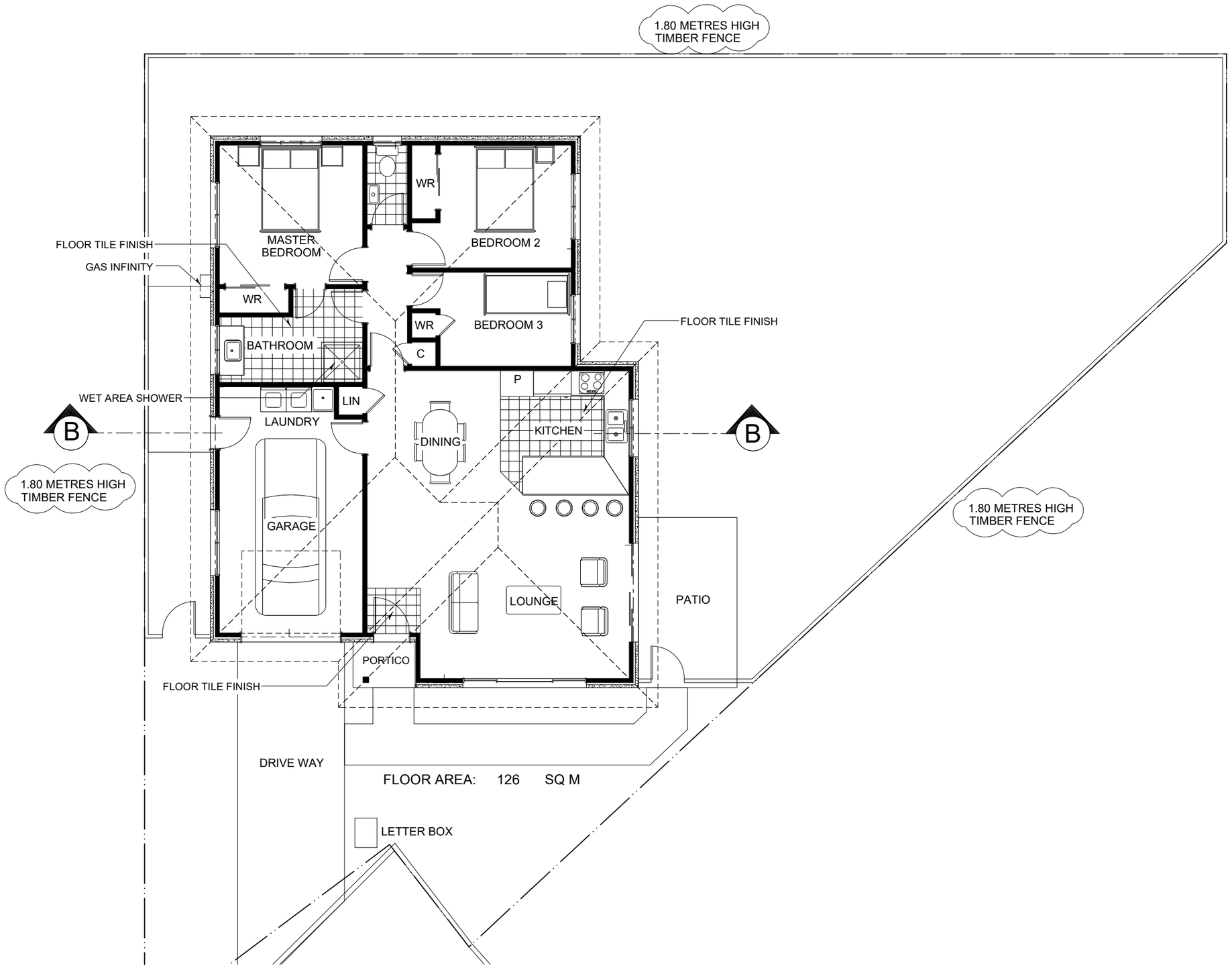

Received Tuesday, 4 April 2017

PROPOSED RESIDENCE FOR

MR STEVE & MRS GAY ROBERTSON

10 LEICESTER PLACE, SPRINGVALE, WANGANUI

FLOOR PLAN

Scale:	Sheet No.
1:100	2
Date: 23 FEB 2017	Revision
Job No.	

No	Dates	Amendments
a	6 MAR 2017	REVISED LOCATION PLAN
b	31 MAR 2017	COUNCIL REQUIREMENTS
c		
d		
e		
f		

Notes:-

DEVON HOMES

REUTERS CONSTRUCTION LTD

165 A, GREAT NORTH ROAD, WANGANUI NEW ZEALAND

PHONE: +64-6-3452393 FA X: +64-6-3452165

EMAIL: reuters@devonhomes.co.nz http://www.devonhomes.co.nz

These plans are the copyright of REUTERS CONSTRUCTIONS LTD

WDC APPROVED

RISK MATRIX FOR ALL ELEVATIONS		
WIND ZONE	HIGH	1
NUMBER OF STOREYS	LOW	0
WALL ROOF INTERSECTION	LOW	0
EAVES WIDTH	MEDIUM	1
ENVELOPE COMPLEXITY	MEDIUM	1
DECK DESIGN	LOW	0
TOTAL SCORE		3



NORTH - EAST ELEVATION



SOUTH - EAST ELEVATION

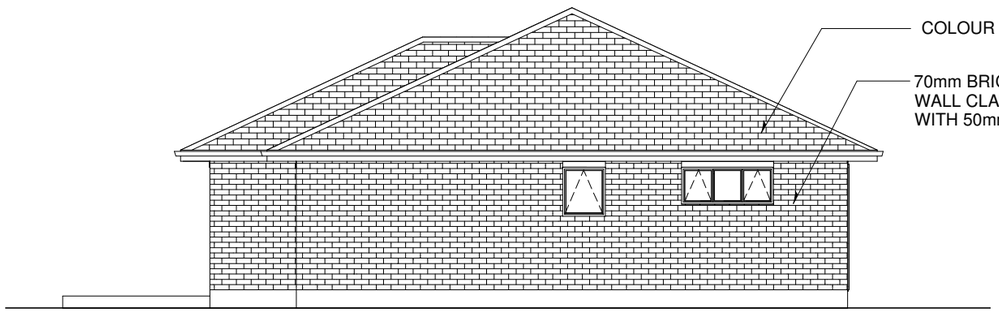

SOUTH - WEST ELEVATION

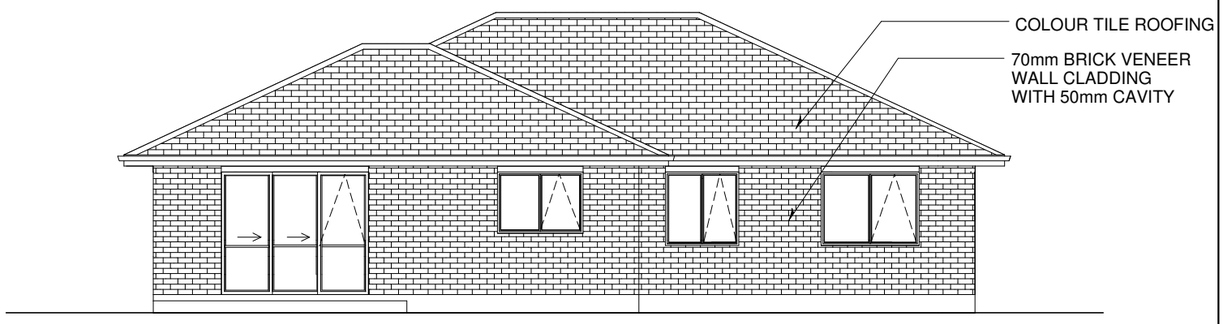

NORTH - WEST ELEVATION

ALL EXTERIOR DOORS & WINDOWS EXCEPT FOR GARAGE TO BE DOUBLE GLAZING

PROPOSED RESIDENCE FOR

MR STEVE & MRS GAY ROBERTSON

10 LEICESTER PLACE, SPRINGVALE, WANGANUI

ELEVATIONS

Scale:	Sheet No.
1:100	3
Date: 23 FEB 2017	Revision
Job No.	

No	Dates	Amendments
a	6 MAR 2017	REVISED LOCATION PLAN
b		
c		
d		
e		
f		

Notes:-

DEVON HOMES

REUTERS CONSTRUCTION LTD

165 A, GREAT NORTH ROAD, WANGANUI NEW ZEALAND

PHONE: +64-6-3452393 FA X: +64-6-3452165

EMAIL: reuters@devonhomes.co.nz http://www.devonhomes.co.nz

These plans are the copyright of REUTERS CONSTRUCTIONS LTD

WDC APPROVED

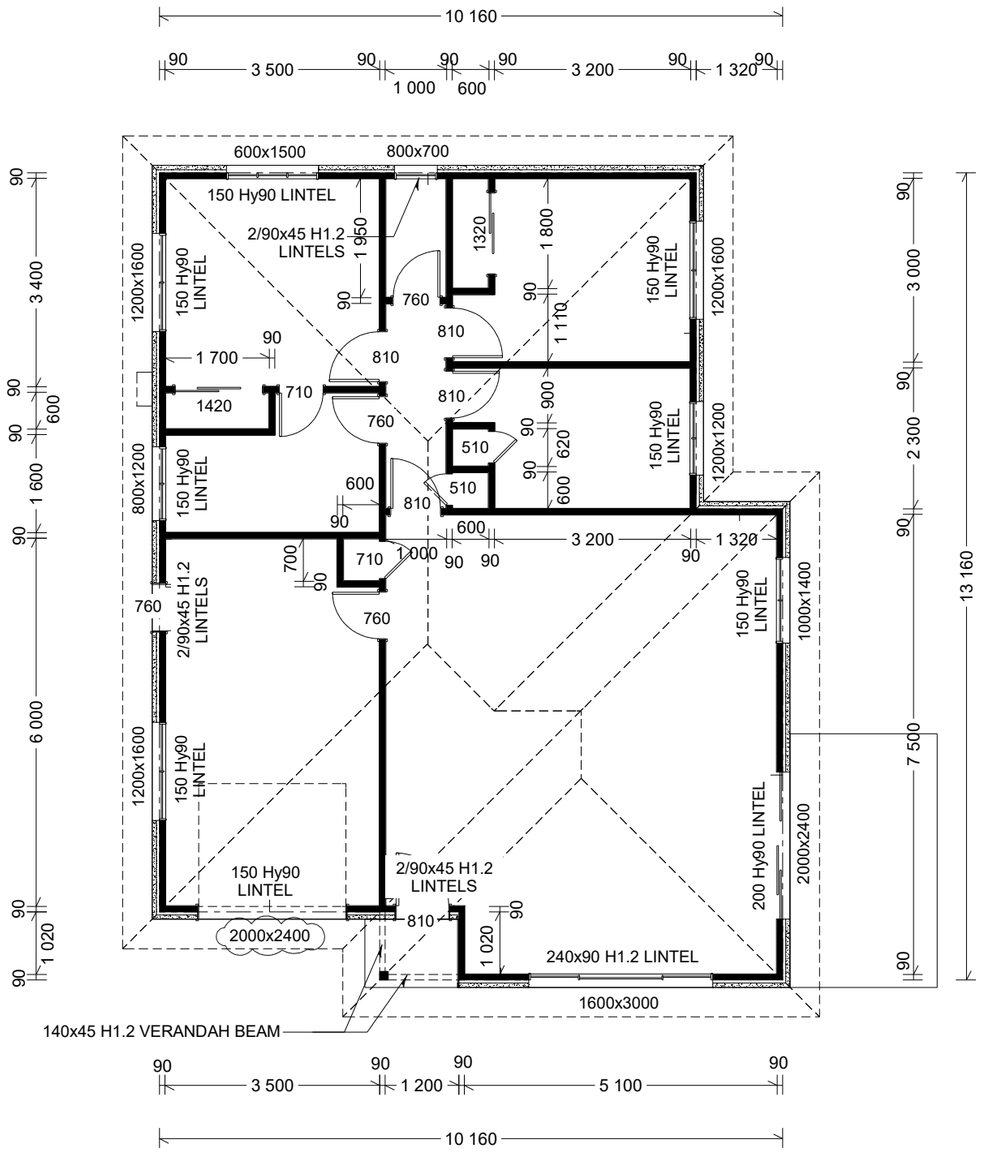

PROPOSED RESIDENCE FOR

MR STEVE & MRS GAY ROBERTSON

10 LEICESTER PLACE, SPRINGVALE, WANGANUI

SET-OUT PLAN

Scale:	Sheet No.
1:100	4
Date: 23 FEB 2017	Revision
Job No.	

No	Dates	Amendments
a	6 MAR 2017	REVISED LOCATION PLAN
b	31 MAR 2017	COUNCIL REQUIREMENTS
c		
d		
e		
f		

Notes:-

DEVON HOMES

REUTERS CONSTRUCTION LTD

165 A, GREAT NORTH ROAD, WANGANUI NEW ZEALAND

PHONE: +64-6-3452393 FA X: +64-6-3452165

EMAIL: reuters@devonhomes.co.nz http://www.devonhomes.co.nz

These plans are the copyright of REUTERS CONSTRUCTIONS LTD

Received Tuesday, 4 April 2017

WDC APPROVED

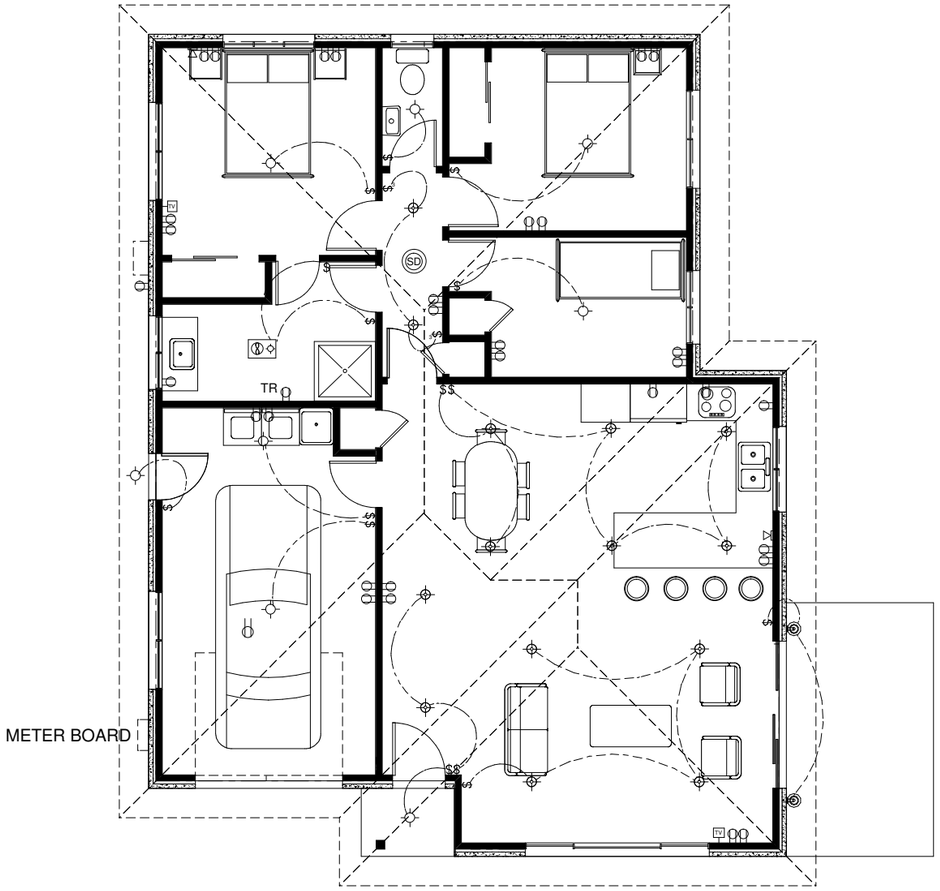

ELECTRICAL LEGEND

	BATTEN HOLDER	
	DOWN LIGHTS	
	TELEPHONE	
TV	TELEVISION	
	POWERPOINT	
SD	SMOKE DETECTOR	
$	LIGHT SWITCH	
	ELECTRICAL CONNECTION	
	HEAT LIGHT FAN	
TR	HEATED TOWEL RAIL	
	WALL LIGHT	

PROPOSED RESIDENCE FOR

MR STEVE & MRS GAY ROBERTSON

10 LEICESTER PLACE, SPRINGVALE, WANGANUI

ELECTRICAL LAYOUT

Scale:	Sheet No.
1:100	7
Date: 23 FEB 2017	Revision
Job No.	

No	Dates	Amendments
a	6 MAR 2017	REVISED LOCATION PLAN
b		
c		
d		
e		
f		

Notes:-

DEVON HOMES

REUTERS CONSTRUCTION LTD

165 A, GREAT NORTH ROAD, WANGANUI NEW ZEALAND

PHONE: +64-6-3452393 FA X: +64-6-3452165

EMAIL: reuters@devonhomes.co.nz http://www.devonhomes.co.nz

These plans are the copyright of REUTERS CONSTRUCTIONS LTD

WDC APPROVED

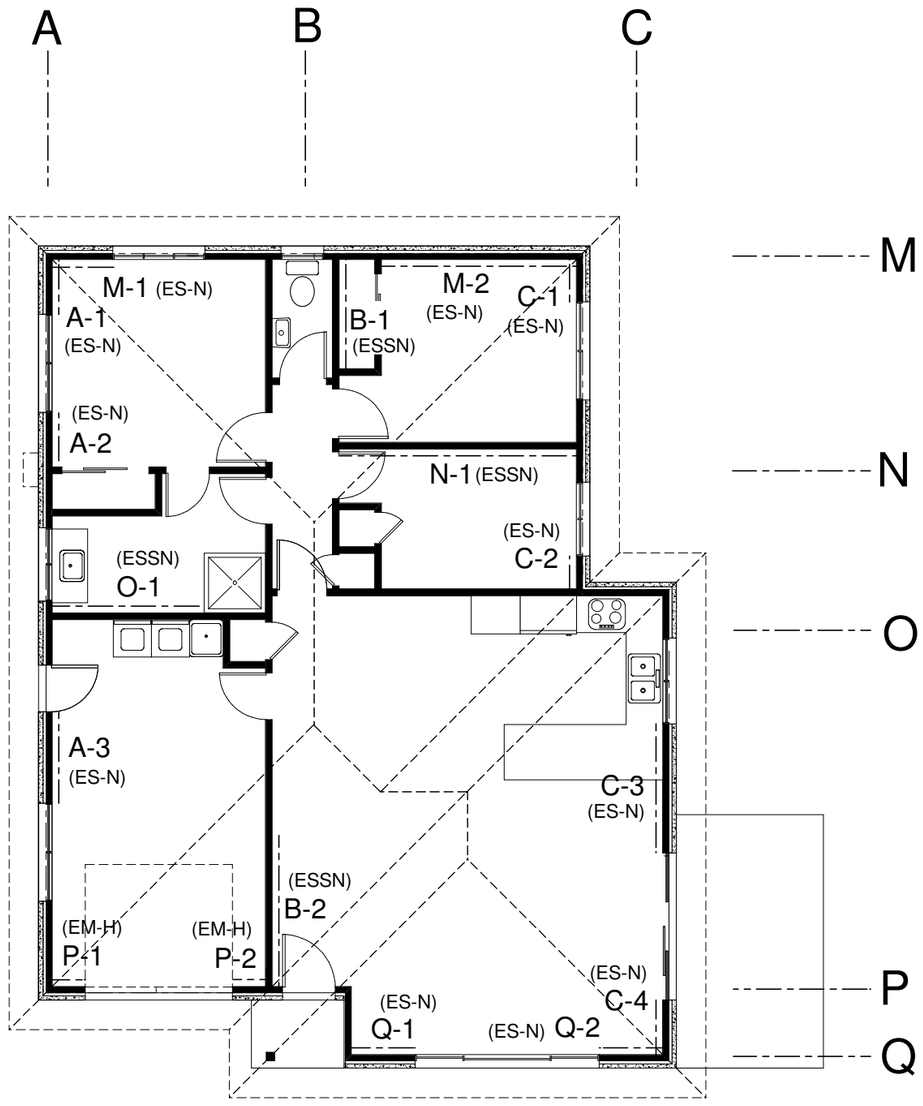

PROPOSED RESIDENCE FOR

MR STEVE & MRS GAY ROBERTSON

10 LEICESTER PLACE, SPRINGVALE, WANGANUI

BRACING PLAN

Scale:	Sheet No.
1:100	8
Date: 23 FEB 2017	Revision
Job No.	

No	Dates	Amendments
a	6 MAR 2017	REVISED LOCATION PLAN
b		
c		
d		
e		
f		

Notes:-

DEVON HOMES

REUTERS CONSTRUCTION LTD

165 A, GREAT NORTH ROAD, WANGANUI NEW ZEALAND

PHONE: +64-6-3452393 FA X: +64-6-3452165

EMAIL: reuters@devonhomes.co.nz http://www.devonhomes.co.nz

These plans are the copyright of REUTERS CONSTRUCTIONS LTD

WDC APPROVED

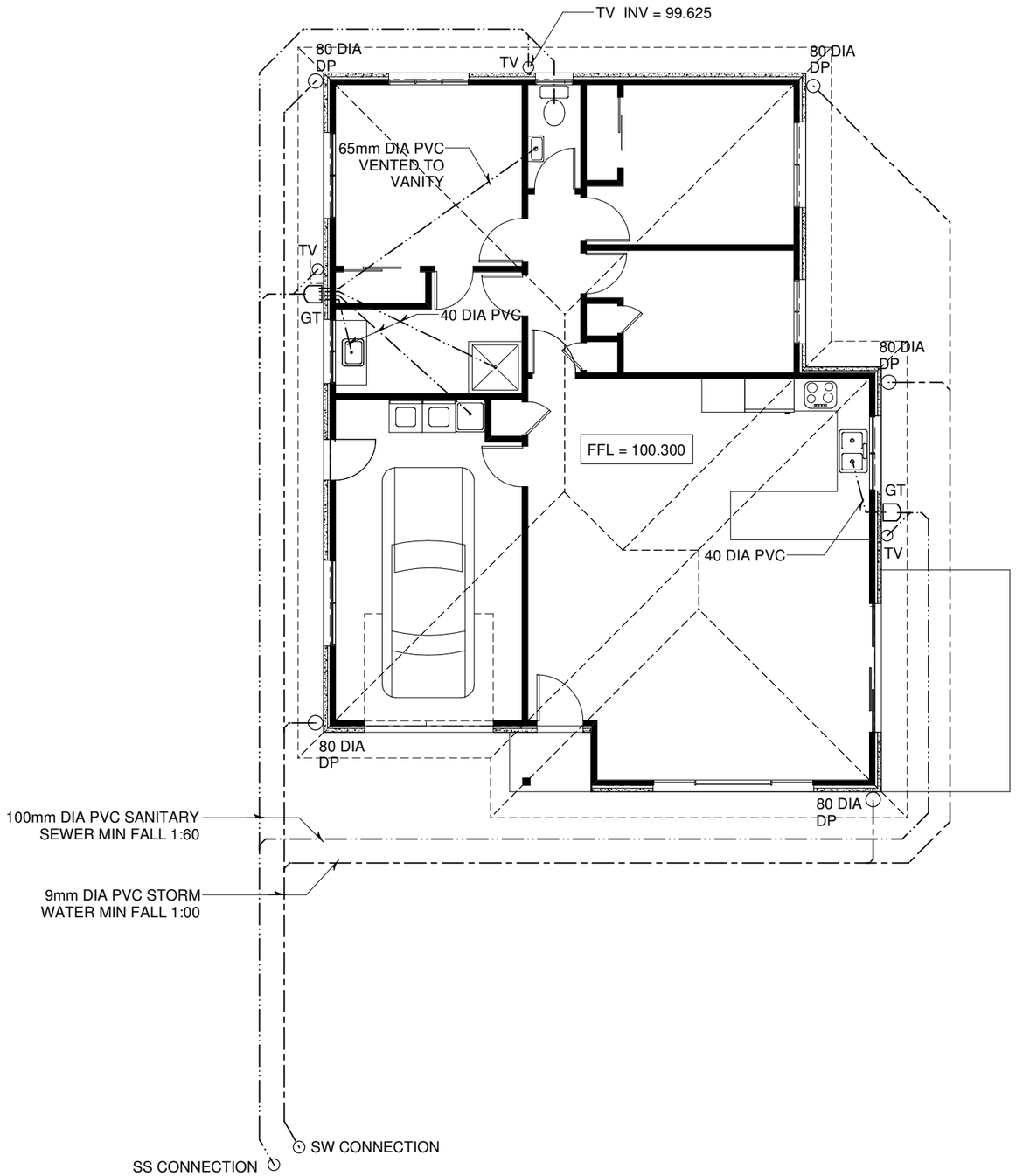

PROPOSED RESIDENCE FOR

MR STEVE & MRS GAY ROBERTSON

10 LEICESTER PLACE, SPRINGVALE, WANGANUI

DRAINAGE PLAN

Scale:	Sheet No.
1:100	9
Date: 23 FEB 2017	Revision
Job No.	

No	Dates	Amendments
a	6 MAR 2017	REVISED LOCATION PLAN
b		
c		
d		
e		
f		

Notes:-

DEVON HOMES

REUTERS CONSTRUCTION LTD

165 A, GREAT NORTH ROAD, WANGANUI NEW ZEALAND

PHONE: +64-6-3452393 FA X: +64-6-3452165

EMAIL: reuters@devonhomes.co.nz http://www.devonhomes.co.nz

These plans are the copyright of REUTERS CONSTRUCTIONS LTD

WDC APPROVED

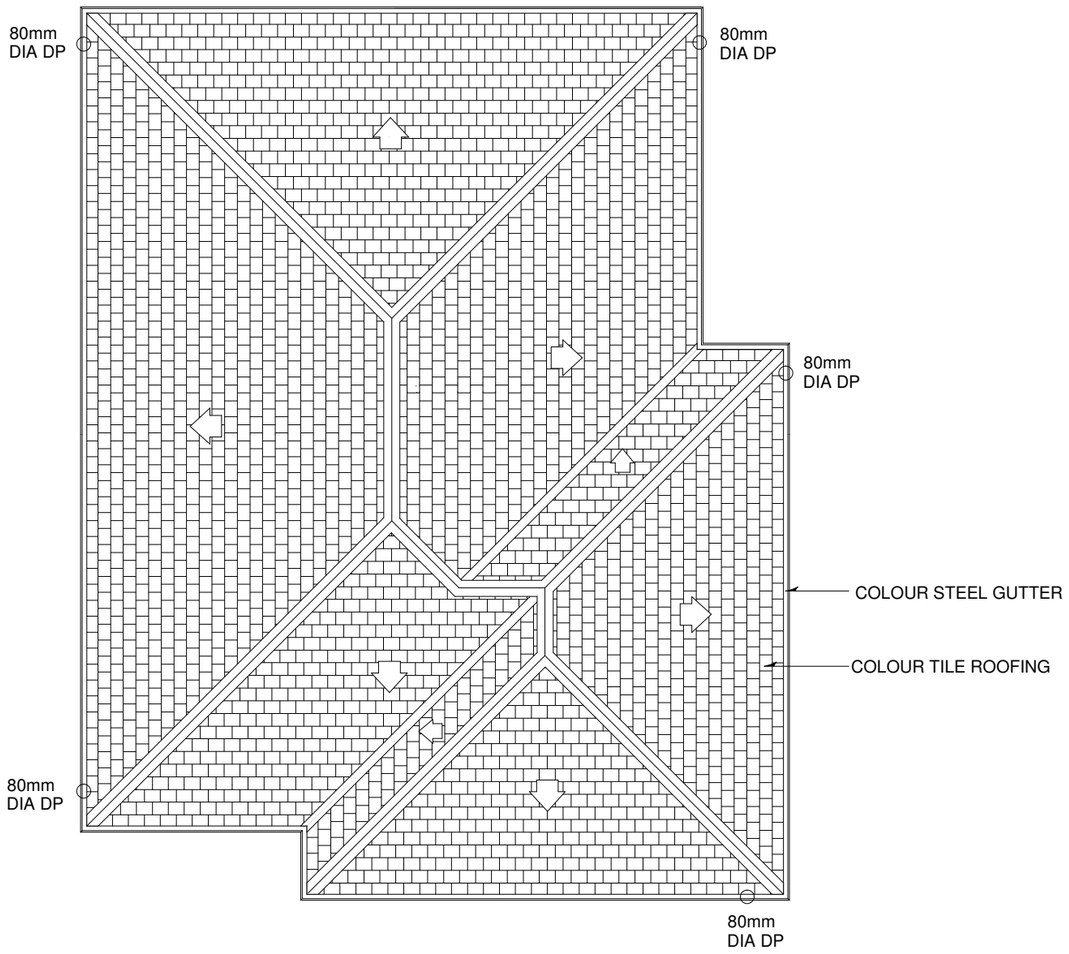

PROPOSED RESIDENCE FOR

MR STEVE & MRS GAY ROBERTSON

10 LEICESTER PLACE, SPRINGVALE, WANGANUI

ROOF PLAN

Scale:	Sheet No.
1:100	10
Date: 23 FEB 2017	Revision
Job No.	

No	Dates	Amendments
a	6 MAR 2017	REVISED LOCATION PLAN
b		
c		
d		
e		
f		

Notes:-

DEVON HOMES

REUTERS CONSTRUCTION LTD

165 A, GREAT NORTH ROAD, WANGANUI NEW ZEALAND

PHONE: +64-6-3452393 FA X: +64-6-3452165

EMAIL: reuters@devonhomes.co.nz http://www.devonhomes.co.nz

These plans are the copyright of REUTERS CONSTRUCTIONS LTD

WDC APPROVED

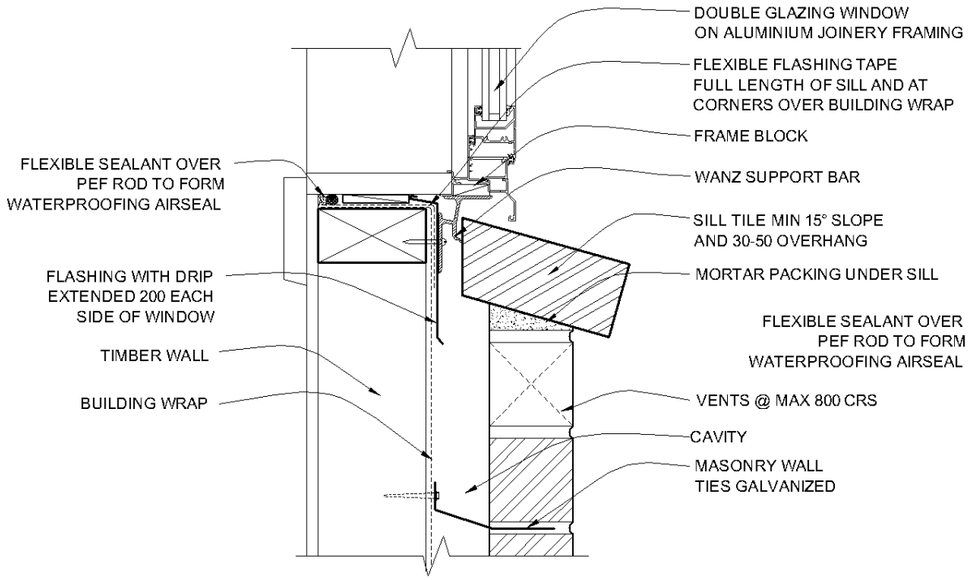

MASONRY VENEER
WINDOW SILL DETAIL

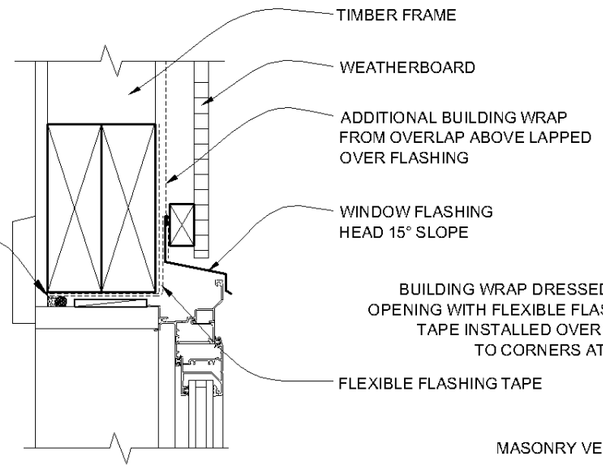

MASONRY VENEER
WINDOW HEAD DETAIL

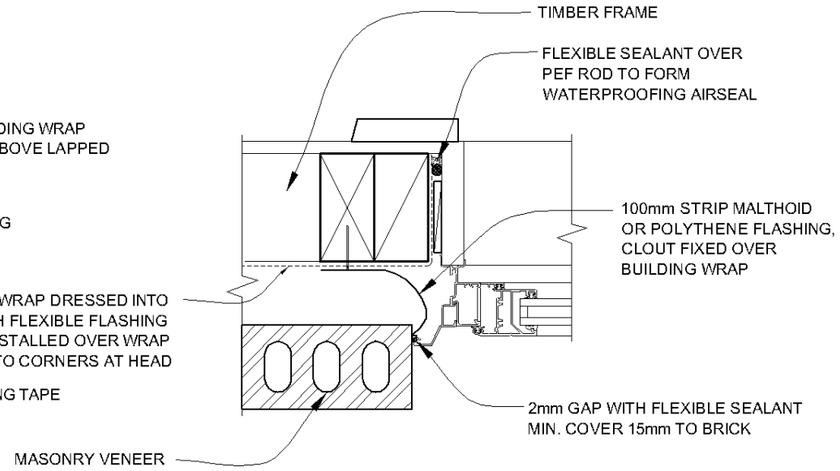

MASONRY VENEER
WINDOW JAMB DETAIL

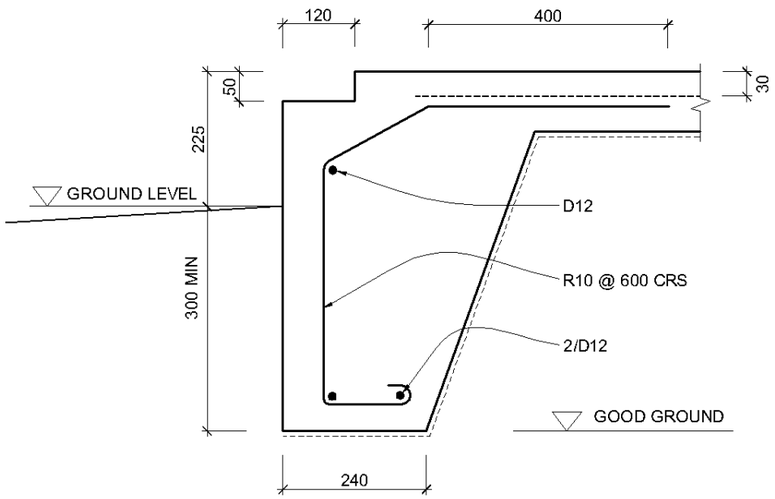

FOUNDATION DETAIL
@ MASONRY VENEER

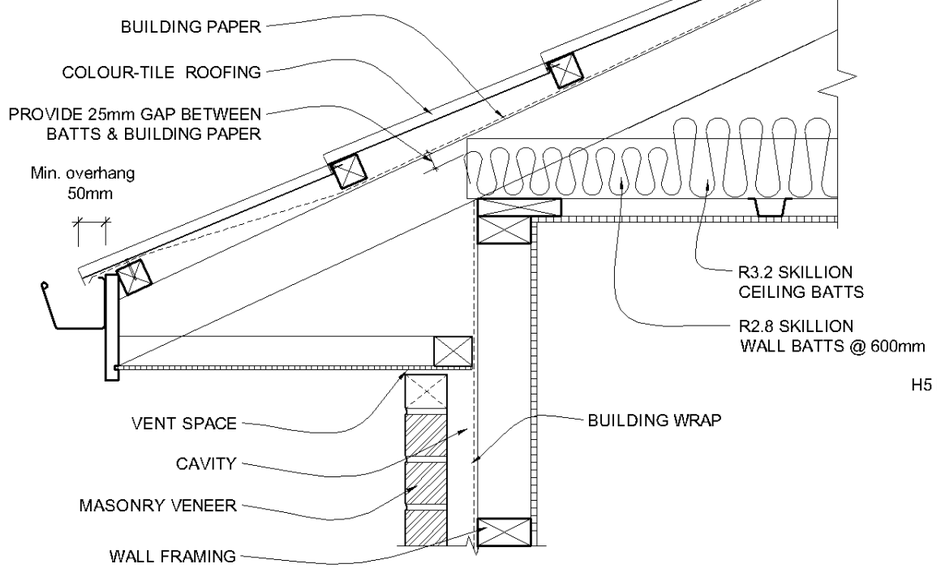

SOFFIT DETAIL @ MASONRY VENEER

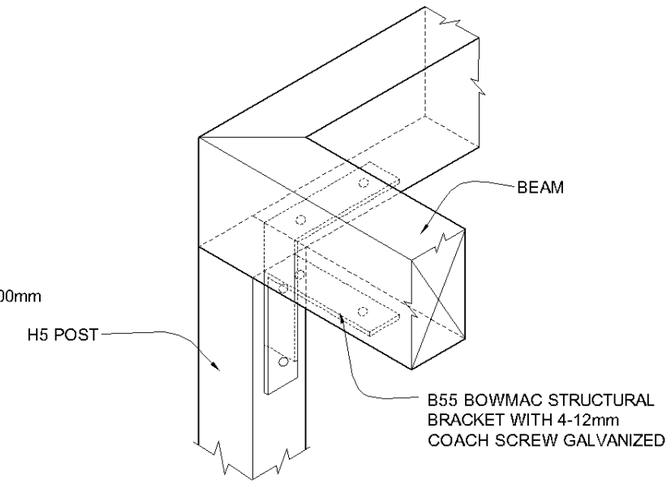

POST & BEAM FIXING DETAIL

PROPOSED RESIDENCE FOR

MR STEVE & MRS GAY ROBERTSON

10 LEICESTER PLACE, SPRINGVALE, WANGANUI

TYPICAL DETAILS

Scale:	Sheet No.
NTS	11
Date: 23 FEB 2017	Revision
Job No.	

No	Dates	Amendments
a	6 MAR 2017	REVISED LOCATION PLAN
b		
c		
d		
e		
f		

Notes:-

DEVON HOMES
REUTERS CONSTRUCTION LTD
165 A, GREAT NORTH ROAD, WANGANUI NEW ZEALAND
PHONE: +64-6-3452393 FA X: +64-6-3452165
EMAIL: reuters@devonhomes.co.nz http://www.devonhomes.co.nz

These plans are the copyright of REUTERS CONSTRUCTIONS LTD

WDC APPROVED

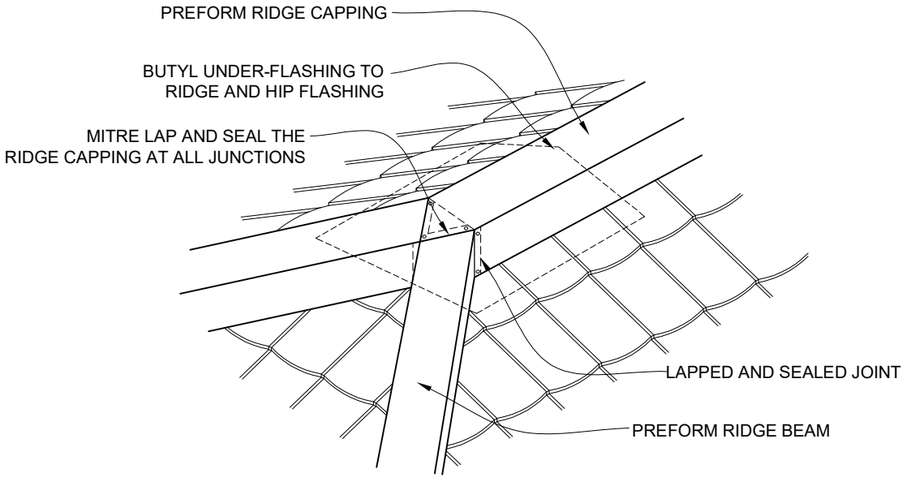

RIDGE TO HIP DETAIL

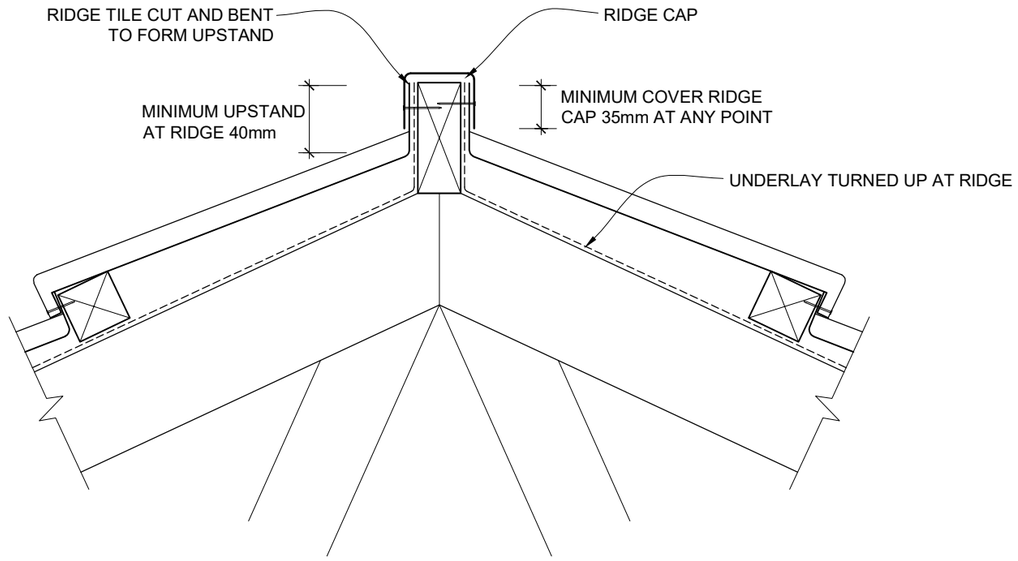

RIDGE / HIP FLASHING DETAIL

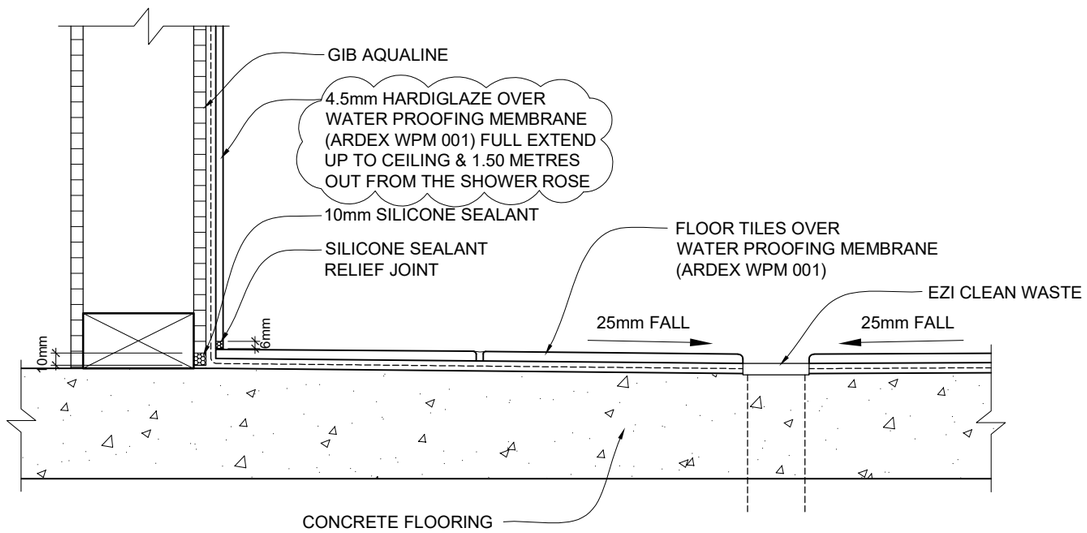

WET AREA SHOWER DETAIL

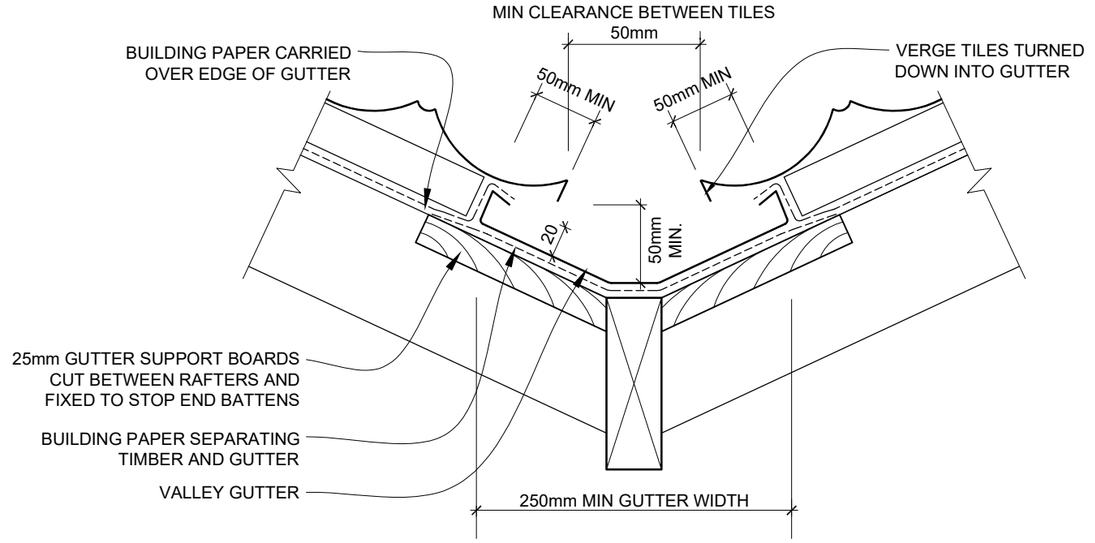

VALLEY GUTTER DETAIL

PROPOSED RESIDENCE FOR

MR STEVE & MRS GAY ROBERTSON

10 LEICESTER PLACE, SPRINGVALE, WANGANUI

TYPICAL DETAILS

Scale:	Sheet No.
NTS	12
Date: 2 MAR 2017	Revision
Job No.	

No	Dates	Amendments
a	31 MAR 2017	COUNCIL REQUIREMENTS
b	6 APRIL 2017	COUNCIL REQUIREMENTS
c		
d		
e		
f		

Notes:-

DEVON HOMES
REUTERS CONSTRUCTION LTD
165 A, GREAT NORTH ROAD, WANGANUI NEW ZEALAND
PHONE: +64-6-3452393 FA X: +64-6-3452165
EMAIL: reuters@devonhomes.co.nz http://www.devonhomes.co.nz

These plans are the copyright of REUTERS CONSTRUCTIONS LTD

Received Tuesday, 11 April 2017

WDC APPROVED

MiTek New Zealand Limited

Correspondence from : **AUCKLAND**
40 Neales Road, East Tamaki 2013
PO Box 58-014, Botany 2163
Phone: 09 274 7109
Fax: 09 274 7100

CHRISTCHURCH
14 Pilkington Way, Wigram 8042
PO Box 8387, Riccarton 8440
Phone: 03 348 8691
Fax: 03 348 0314

www.miteknz.co.nz

PRODUCER STATEMENT for MiTek 20/20® TRUSS DESIGN - Version 4.6

ISSUED BY: **MiTek New Zealand Limited**

TO: **CARTERS Manufacturing**

IN RESPECT OF: **MiTek® Truss Designs**

This producer statement covers the MiTek 20/20® truss design and the structural performance of the GANG-NAIL® connector plate for the job reference **FN93166C** and may be used by a Building Consent Authority to assist in determining compliance with the New Zealand Building Code.

The MiTek 20/20® truss design program has been developed by MiTek New Zealand Limited for the design of MiTek® timber roof, floor and attic trusses in New Zealand. The truss designs computed by MiTek 20/20 ® are prepared using sound and widely accepted engineering principles, and in accordance with compliance documents of the New Zealand Building Code and Verification Method B1/VM1; and internationally accepted standard ANSI/TPI 1 - 2002 as an alternative solution, to satisfy the requirements of Clauses B1 and B2 of the New Zealand Building Code.

On behalf of MiTek New Zealand Limited, and subject to:

i) All proprietary products meeting their performance specification requirements
ii) The provision of adequate roof bracing and overall building stability
iii) Correct selection and placement of GANG-NAIL connector plates
iv) Correct input of Truss Design Data as shown in the Fabricator Design Statement for this job
v) The design being undertaken by the accredited fabricator under the terms of the software licence
vi) Timber is graded to the requirements of NZS 3603:1993
vii) Minimum timber treatment for these MiTek® trusses shall be in accordance with B2/AS1 Table 1A and the relevant sections of NZS 3602:2003

I believe on reasonable grounds that the trusses, if constructed in accordance with the MiTek 20/20® truss design and shop drawings, will comply with the relevant provisions of the New Zealand Building Code.

MiTek New Zealand Limited holds a current policy of Professional Indemnity Insurance no less than $500,000.

On behalf of MiTek New Zealand Limited, **Date: Friday, 24 February 2017**



In Ling Ng, BE (Hons), CPEng, IntPE, MIPENZ (ID: 146585)
TECHNICAL SERVICES MANAGER, MiTek New Zealand Limited

Job: FN93166C
Client: Reuters Construction
Phone:
Site: Robertson House
Lot 23, Leicester Place
Wanganui
Description:
Building Consent No.:
Phone:

MITEK FABRICATOR DESIGN STATEMENT

This statement is issued by MiTek accredited fabricator **CARTERS Manufacturing**, being licensed to use the MiTek 20/20® software, to the client listed above and may be used by the Building Consent Authority to assist in determining compliance with the New Zealand Building Code.

MiTek 20/20® TRUSS DESIGN DATA

The MiTek 20/20® computer design for this job is based on the following design parameters entered into the program. The Fabricator shall ensure that these job details are current and relevant to the project for the design of the MiTek ® trusses.

Job Details

		Importance Level :	2	Design Working Life :	50 years
Roof Truss					
Timber Group:	MSG8 DDP H1.2	Pitch:	25.000 deg	Nominal Overhang:	600 mm
Roof		**Ceiling**		**Wind**	
Material:	Metal Tiles	Material:	Standard	Area:	High (44.0 m/s)
Dead Load:	0.210 kPa	Dead Load:	0.200 kPa	Pressure Coeff:	Cpe = varies; Cpi = -0.30, 0.20
Restraints:	400 mm centres	Restraints:	600 mm centres		
Live Load:	Qur = 0.250 kPa Qc = 1.100 kN	Live Load:	Qc = 1.400 kN		

The minimum timber treatment for these MiTek® trusses shall be in accordance with B2/AS1 Table 1A and the relevant sections of NZS 3602:2003. The timber for these MiTek ® trusses shall be graded to the requirements of NZS 3603:1993. Proprietary fixings and timber connectors shall be selected in accordance with NZS3604:2011 Section 4 - Durability.

MiTek® Truss List

Legend: * = detail only, ? = input only, ~~Txx~~ = failed design, Ø = non certified, Unmarked trusses = designed successfully, LB = lateral bracing required
GB = gable brace required

Truss	Qty	Span (mm)	Pitch (deg)	Spacing (mm)	Truss	Qty	Span (mm)	Pitch (deg)	Spacing (mm)	Truss	Qty	Span (mm)	Pitch (deg)	Spacing (mm)
*HB1	3	6981	18.249	900	T3	1	5953	25.000	900	J1C	1	2552	25.000	900
*HB2	3	5440	18.249	900	T5	1	4063	25.000	900	J1D	1	2552	25.000	900
*HB3	1	1045	18.249	900	TR1	1	8750	25.000	900	J3A	1	2362	25.000	900
*HB4	1	2177	18.249	900	V1	1	2645	25.000	900	J3B	1	2362	25.000	900
J1	3	2552	25.000	900	V2	1	2230	25.000	900	J3C	1	2362	25.000	900
J2	3	1652	25.000	900	V3	1	1330	25.000	900	J5	1	3452	25.000	900
J3	3	2362	25.000	900	J1A	2	2552	25.000	900	T4	1	4063	25.000	900
J4	2	1462	25.000	900	J1E	1	2552	25.000	900	TG1	1	8750	25.000	900
J6	1	945	25.000	900	J2A	3	1652	25.000	900	TG2	1	6570	25.000	900
*R1	3	1343	25.000	900	J3D	2	2362	25.000	900	J5A	1	3452	25.000	900
*R2	12	891	25.000	900	J4A	1	1462	25.000	900	TG3	1	5953	25.000	900
*R3	3	1153	25.000	900	J4B	2	1462	25.000	900	T7	1	4063	25.000	900
R4	1	901	25.000	900	J4C	1	1462	25.000	900	T6	1	6570	25.000	900
T1	2	8750	25.000	900	T3A	2	5953	25.000	900					
T2	1	6570	25.000	900	J1B	1	2552	25.000	900					

Total quantity : 76

The computer design input has been carried out by:

Name of Computer Operator: Geoff. S (06) 348-1755

Qualifications and Title: Truss Detailer

Signed:

A Division of Carter Holt Harvey Dated: Friday, 24 February 2017

BUILDABLE CONSENT LAYOUT

WDC APPROVED

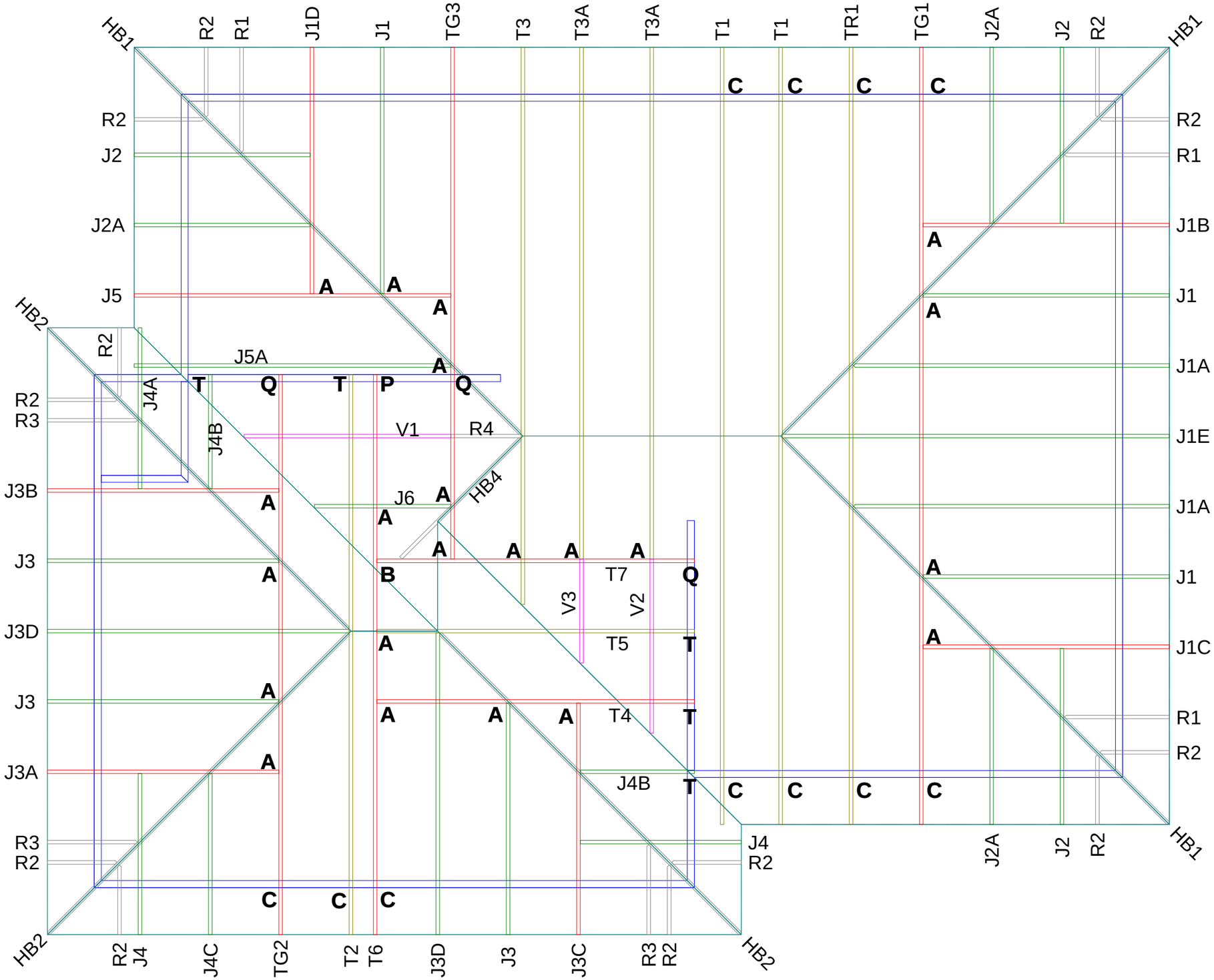

CARTERS
YourBuildingPartner

CARTERS Manufacturing
25 Peterkin Street Lower Hutt
Scheduling/Despatch (04) 567-0274

JOB No **FN93166C**

Client: Reuters Construction
Job Name: Robertson House
Address: Lot 23, Leicester Place
Wanganui

Pitch: 25.0deg
Roof Type: Metal Tiles
Overhang: 600mm
Wind Area: High
Roof Snow: 0.000kPa

Trusses and rafters at 900mm
max centres unless stated otherwise.
This layout is to be read in conjunction
with the Architectural plans.

DRAWN Geoff. S (06) 348-1755 24 Feb,2017

FIXINGS

A = 47x90 Joist Hanger
B = 47x120 Joist Hanger
C = CT200 (pair)
D = 47x190 Joist Hanger
E = 95x165 Joist Hanger
G = SH-140 Split Hanger
H = SH-180 Split Hanger
K = SH-220 Split Hanger
L = 6kN Strap
M = Multigrips (pair)
N = Nailon Plate
S = CPC 40 Single Cleat
T = CPC 40 Short (pair)
U = CPC 80 Single Cleat
Q = 9kN Pack
P = 16kN Pack
X = 25kN Uplift
Y = 35kN Uplift
Z = 45kN Uplift

All truss fixings not indicated as above must have two wire dogs.

Please contact your local CARTERS Manufacturing Branch for any queries regarding this layout.

See Back Page for Dimensions, Lintel Statement & Point Load Notification.

FTMA NEW ZEALAND

BUILDABLE CONSENT LAYOUT

WDC APPROVED

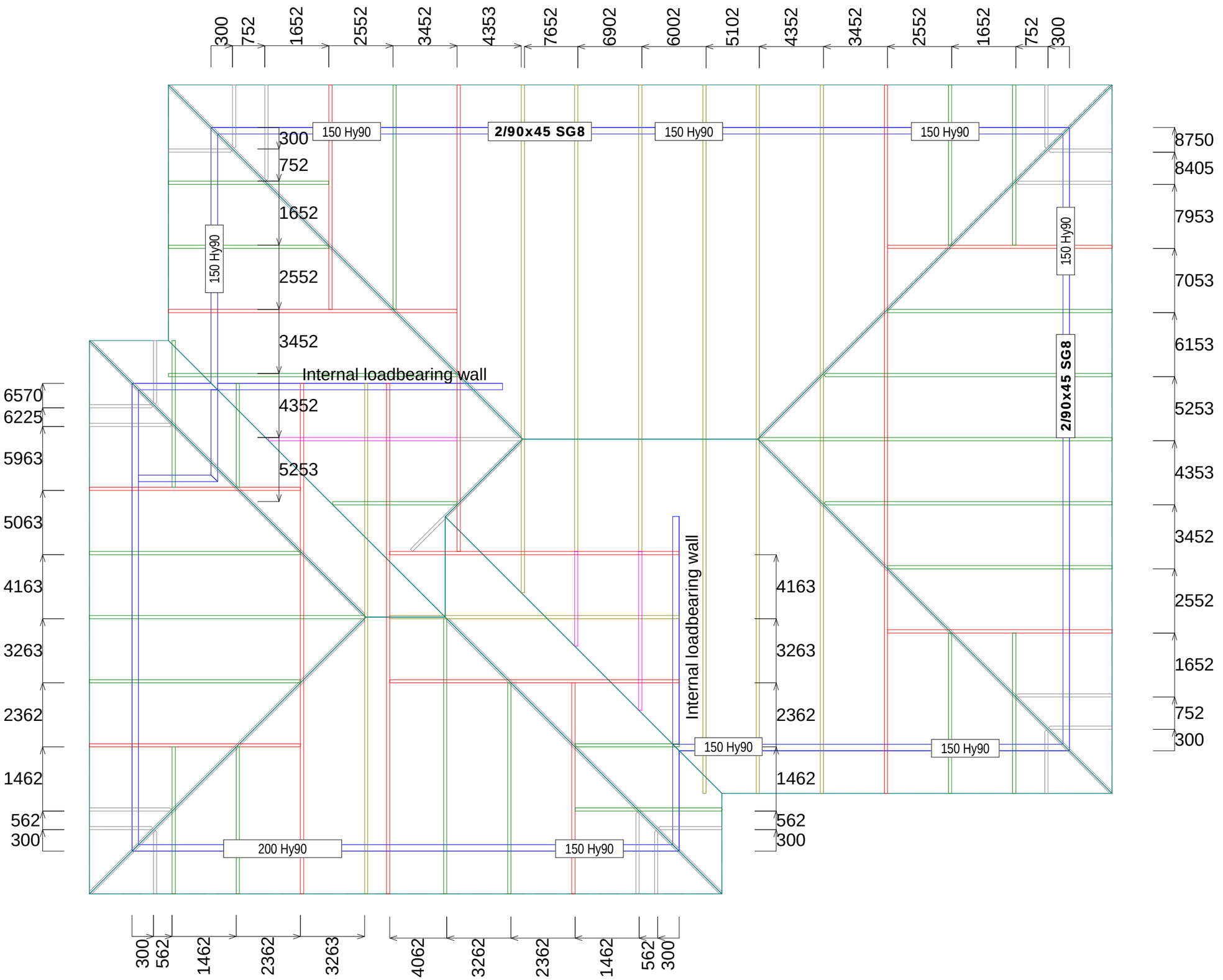

NOTE: If metal ceiling battens on clips are used, bottom chord bracing is required at 1800mm centres.

CARTERS
YourBuildingPartner

CARTERS Manufacturing
25 Peterkin Street Lower Hutt
Scheduling/Despatch (04) 567-0274

JOB No **FN93166C**

Client: Reuters Construction
Job Name: Robertson House
Address: Lot 23, Leicester Place
Wanganui

Pitch: 25.0deg
Roof Type: Metal Tiles
Overhang: 600mm
Wind Area: High
Roof Snow: 0.000kPa

Trusses and rafters at 900mm max centres unless stated otherwise. This layout is to be read in conjunction with the Architectural plans.

DRAWN Geoff. S (06) 348-2455 24 Feb,2017

The lintels have been sized using one of the following:

hy90, hyONE and hySPAN lintels have been sized using the designIT for houses - New Zealand series 5 software.

GANGLAM and FLITCH BEAMS have been sized using the MiTek Beam Program V1.10 June 2011.

Any treated LVL product is H3.1, which satisfies the minimum treatment requirement of H1.2 as per NZS3602.

Unless otherwise stated the timber grade for all lintels is SG8. Lintels not shown are to be selected as per NZS3604: 2011.

All walls shown on this layout are considered to be load bearing.

__kN

NOTIFICATION OF POINT LOADED LINTELS AND POINT LOADS ON INTERNAL OR EXTERNAL WALLS WHERE THE DOWNLOAD IS HIGHER THAN 10kN.
Note: If no point loads indicated, loading does not exceed 10kN.

See Front Page for Truss Layout and Fixings

FTMA NEW ZEALAND

WDC APPROVED

Project Demand

Elephant QuickBrace™ FP - kN or Bu Option: December 2014 V.1.0		Print Date: 2-Mar-17
Specification Sheet	**NZS3604:2011 Compliant**	

Project Name:	**Mr Steve & Mrs Gay Robertson**
Level, Wing or Block etc.	
Street Address:	**10 Leicester Place**
Lot and DP Number:	**23**
City/Town/District:	**Wanganui**

Designer Name:	**Marcelo Lapuz**
Design Company Name:	**Devon Homes**
Bracing Design Date:	**2/03/2017**
Engineering Company Name:	
This form filled out by:	**MRL**

General Specifications

Storey Type:	Single Storey	
Foundation Type	Slab Foundation	
Floor Loads	2 kPA	
Height: Top of Slab to Apex (H)	4.90	m

Roof Specifications

Roof Pitch:	25.0	degrees	*23.7*
Height (h) above Eaves:	2.50	m	
Roof Type:	Typical (Gabled End)		
Roof Cladding Weight:	Light		
Roof Length:	14.4	m	
Roof Width:	11.4	m	

Single Storey Specifications

External Wall Height:	**2.40**	m
Internal Stud Height	2.40	m
Cladding Weight	Heavy	
Building Length	13.2	m
Building Width	10.2	m
Gross Plan Area (GPA)	126.0	m2
Slab Floor Limit: 150 bu's/m	Slab: 150 Bu's/m	
Part Storey in Roof Spaces?	No	

Determine Wind Zone

	Pre Selected	
	Pre Selected	
	Pre Selected	
	Pre Selected	
	Pre Selected	
	Pre Selected	
	Pre Selected	
	Pre Selected	
	Pre Selected	

Enter Wind Zone	High

Determine Earthquake Zone and Subsoil Class.

Earthquake Zone:	2	
Subsoil Classification:	E: Very Soft	
Annual Exceedance Probability:	1/500 yrs - NZS3604:2011 Default	

Single Level Demand

Demand Source: QuickBrace

		QuickBrace© First Principles
		Demands (Bu's)
Wind Along	58.1	**590 Bu's**
Wind Across	41.0	**540 Bu's**
Earthquake	5.9	**746 Bu's**

Elephant QuickBrace™ FP - kN or Bu Option: December 2014 V.1.0

WDC APPROVED

									Wind		Earthquake	
Elephant QuickBrace™ FP - kN or Bu Option: December 2014 V.1.0					Demand Source:		Achieved =	165%	975.0	116%	866.7
Wall Along		Mr Steve & Mrs Gay Robertson			QuickBrace© Principles	First	Total Demand =	Bu's	590.0	Bu's	746.0
Single Storey		10 Leicester Place			Min. Bu's per either External side of Project=			197.4		197.4	
					Minimum Bu's Req. on each Bracing Line =			100.0		124.3	
								Wind		Earthquake	
Line	Element #	Left ,Right OR Internal	Available Wall Length	Wall Angle °	Element Height	System Number	Supplier	Floor Type Max BU's/m or SED	Bu/m	Achieved Bu's	Bu/m	Achieved Bu's
A	A1	Left External	0.90		2.4	ES-N	EPB	150 BU's	72	64	66	59
	A2	Left External	0.90		2.4	ES-N	EPB	150 BU's	72	64	66	59
	A3	Left External	1.40		2.4	ES-N	EPB	150 BU's	79	111	68	95
							A Line: Min. Requirement		*100.0*	*239*	*124.3*	*213*
B	B1	Internal	1.80		2.4	ESSN	EPB	150 BU's	98	176	88	158
	B2	Internal	2.40		2.4	ESSN	EPB	150 BU's	98	235	88	211
							B Line: Min. Requirement		*100.0*	*412*	*124.3*	*370*
C	C1	Right External	0.70		2.4	ES-N	EPB	150 BU's	69	48	65	46
	C2	Right External	0.50		2.4	ES-N	EPB	150 BU's	66	33	65	33
	C3	Right External	2.10		2.4	ES-N	EPB	150 BU's	85	179	70	147
	C4	Right External	0.90		2.4	ES-N	EPB	150 BU's	72	64	66	59
							C Line: Min. Requirement		*100.0*	*324*	*124.3*	*284*
D												
							D Line: Min. Requirement					
E												
							E Line: Min. Requirement					
F												
							F Line: Min. Requirement					
G												
							G Line: Min. Requirement					
H												
							H Line: Min. Requirement					
I												
							I Line: Min. Requirement					
J												
							J Line: Min. Requirement					
User Comments:										Wind		Earthquake
Print Date: 2-Mar-17			Single Storey		Wall Along		Achieved BU's =		165%	975	116%	867
Elephant QuickBrace™ FP - kN or Bu Option: December 2014 V.1.0							Total Demand =		Bu's	590	Bu's	746

WDC APPROVED

Elephant QuickBrace™ FP - kN or Bu Option: December 2014 V.1.0			Demand Source:		Achieved =	Wind 222%	Wind 1198.6	Earthquake 144%	Earthquake 1072.6
Wall Across	**Mr Steve & Mrs Gay Robertson**		**QuickBrace© Principles**	**First**	**Total Demand =**	**Bu's**	**540.0**	**Bu's**	**746.0**
Single Storey	**10 Leicester Place**		**Min. Bu's per either External side of Project=**			**152.4**		**152.4**	
			Minimum Bu's Req. on each Bracing Line =			**100.0**		**100.0**	

Line	Element #	Top, Bottom OR Internal	Available Wall Length	Wall Angle °	Element Height	System Number	Supplier	Floor Type Max BU's/m or SED	Wind Bu/m	Wind Achieved Bu's	Earthquake Bu/m	Earthquake Achieved Bu's
M	M1	Top External	1.00		2.4	ES-N	EPB	150 BU's	73	73	66	66
	M2	Top External	3.20		2.4	ES-N	EPB	150 BU's	85	272	70	224
							M Line: Min. Requirement		***100.0***	*345*	***100.0***	*290*
N	N1	Internal	3.80		2.4	ESSN	EPB	150 BU's	98	372	88	334
							N Line: Min. Requirement		***100.0***	*372*	***100.0***	*334*
O	O1	Internal	2.40		2.4	ESSN	EPB	150 BU's	98	235	88	211
							O Line: Min. Requirement		***100.0***	*235*	***100.0***	*211*
P	P1	Bot. External	0.50		2.4	EM-H	EPB	150 BU's	100	50	105	53
	P2	Bot. External	0.50		2.4	EM-H	EPB	150 BU's	100	50	105	53
							P Line: Min. Requirement		***100.0***	*100*	***100.0***	*105*
Q	Q1	Bot. External	1.00		2.4	ES-N	EPB	150 BU's	73	73	66	66
	Q2	Bot. External	1.00		2.4	ES-N	EPB	150 BU's	73	73	66	66
							Q Line: Min. Requirement		***100.0***	*146*	***100.0***	*132*
R												
							R Line: Min. Requirement					
S												
							S Line: Min. Requirement					
T												
							T Line: Min. Requirement					
U												
							U Line: Min. Requirement					
V												
							V Line: Min. Requirement					

User Comments:					Wind		Earthquake	
Print Date: 2-Mar-17	**Single Storey**	**Wall Across**	**Achieved BU's =**		222%	**1199**	144%	**1073**
Elephant QuickBrace™ FP - kN or Bu Option: December 2014 V.1.0			**Total Demand =**		**Bu's**	**540**	**Bu's**	**746**

WDC APPROVED

Ninth Edition 2012 (5)

AGREEMENT FOR SALE AND PURCHASE OF REAL ESTATE

This form is approved by the Real Estate Institute of New Zealand Incorporated and by Auckland District Law Society Incorporated.

DATE: 30th January 2017

VENDOR: DOUBLE DUTCH LIMITED

PURCHASER: Gayleen Irene ROBERTSON and Stephen Andrew ROBERTSON, 12 Bankwood Rd, Chartwell, Hamilton **and/or nominee**

The vendor is registered under the GST Act in respect of the transaction evidenced by this agreement and/or will be so registered at settlement: **Yes/No**

PROPERTY

Address: Lot 23, 10 Leicester Place, Springvale Gardens, Whanganui

Estate: **FEE SIMPLE** ~~**LEASEHOLD**~~ ~~**STRATUM IN FREEHOLD**~~ ~~**STRATUM IN LEASEHOLD**~~ ~~**CROSSLEASE (FEE SIMPLE)**~~ ~~**CROSSLEASE (LEASEHOLD)**~~ (fee simple if none is deleted)

Legal Description:

Area (more or less):	*Lot/Flat/Unit:*	*DP:*	*Unique Identifier or CT:*
461m²	23	500432	761973

Auckland District Law Society Inc & Real Estate Institute of New Zealand Inc
© Copyright
July 2016

PAYMENT OF PURCHASE PRICE

Purchase price: $ 111,750.00

~~**Plus GST**~~ (if any) OR **Inclusive of GST** (if any)
If neither is deleted, the purchase price includes GST (if any).

GST date (refer clause 14.0):

Deposit (refer clause 2.0): $ ~~11,175.00~~ Nil

Balance of purchase price to be paid or satisfied as follows:

~~(1) By payment in cleared funds on the settlement date which is~~

OR

(2) In the manner described in the Further Terms of Sale.

Interest rate for late settlement: 12 **% p.a.**

CONDITIONS (refer clause 10.0)

Finance condition	**LIM required: (refer clause 10.2)** **Yes/No**
Lender:	**Building report required: (refer clause 10.3)** **Yes/No**
Amount required:	**OIA Consent required: (refer clause 10.4)** **Yes/No**
Finance date:	**Land Act/OIA date:**

~~**TENANCIES** (if any)~~

Name of tenant: VACANT POSSESSION

~~**Bond:**~~ ~~**Rent:**~~ ~~**Term:**~~ ~~**Right of renewal:**~~

SALE BY: PRIVATE TREATY

Licensed Real Estate Agent under Real Estate Agents Act 2008

It is agreed that the vendor sells and the purchaser purchases the property, and the chattels listed in Schedule 1, on the terms set out above and in the General Terms of Sale and any Further Terms of Sale.

BR GR

GENERAL TERMS OF SALE

1.0 Definitions, time for performance, notices, and interpretation

1.1 Definitions

(1) Unless the context requires a different interpretation, words and phrases not otherwise defined have the same meanings ascribed to those words and phrases in the Goods and Services Tax Act 1985, the Property Law Act 2007, the Resource Management Act 1991 or the Unit Titles Act 2010.
(2) "Agreement" means this document including the front page, these General Terms of Sale, any Further Terms of Sale, and any schedules and attachments.
(3) "Building Act" means the Building Act 1991 and/or the Building Act 2004.
(4) "Building warrant of fitness" means a building warrant of fitness supplied to a territorial authority under the Building Act.
(5) "Cleared funds" means:
  (a) An electronic transfer of funds that has been made strictly in accordance with the requirements set out in the PLS Guidelines; or
  (b) A bank cheque, but only in the circumstances permitted by the PLS Guidelines and only if it has been paid strictly in accordance with the requirements set out in the PLS Guidelines.
(6) "Default GST" means any additional GST, penalty (civil or otherwise), interest, or other sum imposed on the vendor (or where the vendor is or was a member of a GST group its representative member) under the GST Act or the Tax Administration Act 1994 by reason of non-payment of any GST payable in respect of the supply made under this agreement but does not include any such sum levied against the vendor (or where the vendor is or was a member of a GST group its representative member) by reason of a default or delay by the vendor after payment of the GST to the vendor by the purchaser.
(7) "Electronic instrument" has the same meaning as ascribed to that term in the Land Transfer (Computer Registers and Electronic Lodgement) Amendment Act 2002.
(8) "GST" means Goods and Services Tax arising pursuant to the Goods and Services Tax Act 1985 and "GST Act" means the Goods and Services Tax Act 1985.
(9) "Landonline Workspace" means an electronic workspace facility approved by the Registrar-General of Land pursuant to the provisions of the Land Transfer (Computer Registers and Electronic Lodgement) Amendment Act 2002.
(10) "LIM" means a land information memorandum issued pursuant to the Local Government Official Information and Meetings Act 1987.
(11) "LINZ" means Land Information New Zealand.
(12) "Local authority" means a territorial authority or a regional council.
(13) "OIA Consent" means consent to purchase the property under the Overseas Investment Act 2005.
(14) "PLS Guidelines" means the most recent edition, as at the date of this agreement, of the Property Transactions and E-Dealing Practice Guidelines prepared by the Property Law Section of the New Zealand Law Society.
(15) "Property" means the property described in this agreement.
(16) "Purchase price" means the total purchase price stated in this agreement which the purchaser has agreed to pay the vendor for the property and the chattels included in the sale.
(17) "Regional council" means a regional council within the meaning of the Local Government Act 2002.
(18) "Remote settlement" means settlement of the sale and purchase of the property by way of the purchaser's lawyer paying the moneys due and payable on the settlement date directly into the trust account of the vendor's lawyer, in consideration of the vendor agreeing to meet the vendor's obligations under subclause 3.8(2), pursuant to the protocol for remote settlement recommended in the PLS Guidelines.
(19) "Secure web document exchange" means an electronic messaging service enabling messages and electronic documents to be posted by one party to a secure website to be viewed by the other party immediately after posting.
(20) "Settlement date" means the date specified as such in this agreement.
(21) "Settlement statement" means a statement showing the purchase price, plus any GST payable by the purchaser in addition to the purchase price, less any deposit or other payments or allowances to be credited to the purchaser, together with apportionments of all incomings and outgoings apportioned at the settlement date.
(22) "Territorial authority" means a territorial authority within the meaning of the Local Government Act 2002.
(23) "Unit title" means a unit title under the Unit Titles Act 2010.
(24) The terms "principal unit", "accessory unit", "owner", "unit plan", and "unit" have the meanings ascribed to those terms in the Unit Titles Act 2010.
(25) The term "rules" includes both body corporate rules under the Unit Titles Act 1972 and body corporate operational rules under the Unit Titles Act 2010.
(26) The terms "building", "building consent", "code compliance certificate", "compliance schedule", "household unit", and "commercial on-seller" have the meanings ascribed to those terms in the Building Act.
(27) The term "title" includes where appropriate a computer register within the meaning of the Land Transfer (Computer Registers and Electronic Lodgement) Amendment Act 2002.
(28) The terms "going concern", "goods", "principal place of residence", "recipient", "registered person", "registration number", "supply", and "taxable activity" have the meanings ascribed to those terms in the GST Act.
(29) The terms "tax information" and "tax statement" have the meanings ascribed to those terms in the Land Transfer Act 1952.
(30) The terms "associated person", "conveyancer", "residential land purchase amount", "offshore RLWT person", "RLWT", "RLWT certificate of exemption" and "RLWT rules" have the meanings ascribed to those terms in the Income Tax Act 2007.
(31) The term "Commissioner" has the meaning ascribed to that term in the Tax Administration Act 1994.
(32) "Working day" means any day of the week other than:
  (a) Saturday, Sunday, Waitangi Day, Good Friday, Easter Monday, Anzac Day, the Sovereign's Birthday, and Labour Day;
  (b) if Waitangi Day or Anzac Day falls on a Saturday or Sunday, the following Monday;
  (c) a day in the period commencing on the 24th day of December in any year and ending on the 5th day of January (or in the case of subclause 10.2(2) the 15th day of January) in the following year, both days inclusive; and
  (d) the day observed as the anniversary of any province in which the property is situated.

  A working day shall be deemed to commence at 9.00 am and to terminate at 5.00 pm.
(33) Unless a contrary intention appears on the front page or elsewhere in this agreement:
  (a) the interest rate for late settlement is equivalent to the interest rate charged by the Inland Revenue Department on unpaid tax under the Tax Administration Act 1994 during the period for which the interest rate for late settlement is payable, plus 5% per annum; and
  (b) a party is in default if it did not do what it has contracted to do to enable settlement to occur, regardless of the cause of such failure.

1.2 Time for Performance

(1) Where the day nominated for settlement or the fulfilment of a condition is not a working day, then the settlement date or the date for fulfilment of the condition shall be the last working day before the day so nominated.
(2) Any act done pursuant to this agreement by a party, including service of notices, after 5.00 pm on a working day, or on a day that is not a working day, shall be deemed to have been done at 9.00 am on the next succeeding working day.
(3) Where two or more acts done pursuant to this agreement, including service of notices, are deemed to have been done at the same time, they shall take effect in the order in which they would have taken effect but for subclause 1.2(2).

1.3 Notices

The following apply to all notices between the parties relevant to this agreement, whether authorised by this agreement or by the general law:

(1) All notices must be served in writing.
(2) Any notice under section 28 of the Property Law Act 2007, where the purchaser is in possession of the property, must be served in accordance with section 353 of that Act.
(3) All other notices, unless otherwise required by the Property Law Act 2007, must be served by one of the following means:
  (a) on the party as authorised by sections 354 to 361 of the Property Law Act 2007, or
  (b) on the party or on the party's lawyer:
    (i) by personal delivery; or
    (ii) by posting by ordinary mail; or
    (iii) by facsimile; or
    (iv) by email; or
    (v) in the case of the party's lawyer only, by sending by document exchange or, if both parties' lawyers have agreed to subscribe to the same secure web document exchange for this agreement, by secure web document exchange.
(4) In respect of the means of service specified in subclause 1.3(3)(b), a notice is deemed to have been served:
  (a) in the case of personal delivery, when received by the party or at the lawyer's office;
  (b) in the case of posting by ordinary mail, on the third working day following the date of posting to the address for service notified in writing by the party or to the postal address of the lawyer's office;
  (c) in the case of facsimile transmission, when sent to the facsimile number notified in writing by the party or to the facsimile number of the lawyer's office;
  (d) in the case of email, when acknowledged by the party or by the lawyer orally or by return email or otherwise in writing, except that return emails generated automatically shall not constitute an acknowledgement;

Copyright

WDC APPROVED

(e) in the case of sending by document exchange, on the second working day following the date of sending to the document exchange number of the lawyer's office;
(f) in the case of sending by secure web document exchange, at the time when in the ordinary course of operation of that secure web document exchange, a notice posted by one party is accessible for viewing or downloading by the other party.

(5) Any period of notice required to be given under this agreement shall be computed by excluding the day of service.
(6) In accordance with section 20(1) of the Electronic Transactions Act 2002, the parties agree that any notice or document that must be given in writing by one party to the other may be given in electronic form and by means of an electronic communication, subject to the rules regarding service set out above.

1.4 Interpretation
(1) If there is more than one vendor or purchaser, the liability of the vendors or of the purchasers, as the case may be, is joint and several.
(2) Where the purchaser executes this agreement with provision for a nominee, or as agent for an undisclosed or disclosed but unidentified principal, or on behalf of a company to be formed, the purchaser shall at all times remain liable for all obligations on the part of the purchaser.
(3) If any inserted term (including any Further Terms of Sale) conflicts with the General Terms of Sale the inserted term shall prevail.
(4) Headings are for information only and do not form part of this agreement.
(5) References to statutory provisions shall be construed as references to those provisions as they may be amended or re-enacted or as their application is modified by other provisions from time to time.

2.0 Deposit

2.1 The purchaser shall pay the deposit to the vendor or the vendor's agent immediately upon execution of this agreement by both parties and/or at such other time as is specified in this agreement.

2.2 If the deposit is not paid on the due date for payment, the vendor may at any time thereafter serve on the purchaser notice requiring payment. If the purchaser fails to pay the deposit on or before the third working day after service of the notice, time being of the essence, the vendor may cancel this agreement by serving notice of cancellation on the purchaser. No notice of cancellation shall be effective if the deposit has been paid before the notice of cancellation is served.

2.3 The deposit shall be in part payment of the purchase price.

2.4 The person to whom the deposit is paid shall hold it as a stakeholder until:
(1) the requisition procedure under clause 6.0 is completed without either party cancelling this agreement; and
(2) where this agreement is entered into subject to any condition(s) expressed in this agreement, each such condition has been fulfilled or waived; and
(3) where the property is a unit title:
(a) a pre-settlement disclosure statement, certified correct by the body corporate, under section 147 of the Unit Titles Act 2010; and
(b) an additional disclosure statement under section 148 of the Unit Titles Act 2010 (if requested by the purchaser within the time prescribed in section 148(2)),
have been provided to the purchaser by the vendor within the times prescribed in those sections or otherwise the purchaser has given notice under section 149(2) of the Unit Titles Act 2010 to postpone the settlement date until after the disclosure statements have been provided; or
(4) this agreement is cancelled pursuant to subclause 6.2(3)(c) or avoided pursuant to subclause 10.8(5) or, where the property is a unit title and the purchaser having the right to cancel this agreement pursuant to section 151(2) of the Unit Titles Act 2010 has cancelled this agreement pursuant to that section, or has waived the right to cancel by giving notice to the vendor, or by completing settlement of the purchase.

3.0 Possession and Settlement

Possession

3.1 Unless particulars of a tenancy are included in this agreement, the property is sold with vacant possession and the vendor shall so yield the property on the settlement date.

3.2 If the property is sold with vacant possession, then subject to the rights of any tenants of the property, the vendor shall permit the purchaser or any person authorised by the purchaser in writing, upon reasonable notice:
(1) to enter the property on one occasion prior to the settlement date for the purposes of examining the property, chattels and fixtures which are included in the sale; and
(2) to re-enter the property on or before the settlement date to confirm compliance by the vendor with any agreement made by the vendor to carry out any work on the property and the chattels and the fixtures.

3.3 Possession shall be given and taken on the settlement date. Outgoings and incomings in respect of the settlement date are the responsibility of and belong to the vendor.

3.4 On the settlement date, the vendor shall make available to the purchaser keys to all exterior doors that are locked by key, electronic door openers to all doors that are opened electronically, and the keys and/or security codes to any alarms. The vendor does not have to make available keys, electronic door openers, and security codes where the property is tenanted and these are held by the tenant.

Settlement

3.5 The vendor shall prepare, at the vendor's own expense, a settlement statement. The vendor shall tender the settlement statement to the purchaser or the purchaser's lawyer a reasonable time prior to the settlement date.

3.6 The purchaser's lawyer shall:
(1) within a reasonable time prior to the settlement date create a Landonline Workspace for the transaction, notify the vendor's lawyer of the dealing number allocated by LINZ, and prepare in that workspace a transfer instrument in respect of the property; and
(2) prior to settlement:
(a) lodge in that workspace the tax information contained in the transferee's tax statement; and
(b) certify and sign the transfer instrument.

3.7 The vendor's lawyer shall:
(1) within a reasonable time prior to the settlement date prepare in that workspace all other electronic instruments required to confer title on the purchaser in terms of the vendor's obligations under this agreement; and
(2) prior to settlement:
(a) lodge in that workspace the tax information contained in the transferor's tax statement; and
(b) have those instruments and the transfer instrument certified, signed and, where possible, pre-validated.

3.8 On the settlement date:
(1) the balance of the purchase price, interest and other moneys, if any, shall be paid by the purchaser in cleared funds or otherwise satisfied as provided in this agreement (credit being given for any amount payable by the vendor under subclause 3.12 or 3.14);
(2) the vendor's lawyer shall immediately thereafter:
(a) release or procure the release of the transfer instrument and the other instruments mentioned in subclause 3.7(1) so that the purchaser's lawyer can then submit them for registration;
(b) pay to the purchaser's lawyer the LINZ registration fees on all of the instruments mentioned in subclause 3.7(1), unless these fees will be invoiced to the vendor's lawyer by LINZ directly; and
(c) deliver to the purchaser's lawyer any other documents that the vendor must provide to the purchaser on settlement in terms of this agreement.

3.9 All obligations under subclause 3.8 are interdependent.

3.10 The parties shall complete settlement by way of remote settlement, provided that where payment by bank cheque is permitted under the PLS Guidelines, payment may be made by the personal delivery of a bank cheque to the vendor's lawyer's office, so long as it is accompanied by the undertaking from the purchaser's lawyer required by those Guidelines.

Last Minute Settlement

3.11 If due to the delay of the purchaser, settlement takes place between 4.00 pm and 5.00 pm on the settlement date ("last minute settlement"), the purchaser shall pay the vendor:
(1) one day's interest at the interest rate for late settlement on the portion of the purchase price paid in the last minute settlement; and
(2) if the day following the last minute settlement is not a working day, an additional day's interest (calculated in the same manner) for each day until, but excluding, the next working day.

BRGR

3.12 If any portion of the purchase price is not paid upon the due date for payment, then, provided that the vendor provides reasonable evidence of the vendor's ability to perform any obligation the vendor is obliged to perform on that date in consideration for such payment:
(1) the purchaser shall pay to the vendor interest at the interest rate for late settlement on the portion of the purchase price so unpaid for the period from the due date for payment until payment ("the default period"); but nevertheless, this stipulation is without prejudice to any of the vendor's rights or remedies including any right to claim for additional expenses and damages. For the purposes of this subclause, a payment made on a day other than a working day or after the termination of a working day shall be deemed to be made on the next following working day and interest shall be computed accordingly; and
(2) the vendor is not obliged to give the purchaser possession of the property or to pay the purchaser any amount for remaining in possession, unless this agreement relates to a tenanted property, in which case the vendor must elect either to:
(a) account to the purchaser on settlement for incomings in respect of the property which are payable and received during the default period, in which event the purchaser shall be responsible for the outgoings relating to the property during the default period; or
(b) retain such incomings in lieu of receiving interest from the purchaser pursuant to subclause 3.12(1).

3.13 Where subclause 3.12(1) applies and the parties are unable to agree upon any amount claimed by the vendor for additional expenses and damages:
(1) an interim amount shall on settlement be paid to a stakeholder by the purchaser until the amount payable is determined;
(2) the interim amount must be a reasonable sum having regard to all of the circumstances;
(3) if the parties cannot agree on the interim amount, the interim amount shall be determined by an experienced property lawyer appointed by the parties. The appointee's costs shall be met equally by the parties. If the parties cannot agree on the appointee, the appointment shall be made on the application of either party by the president for the time being of the New Zealand Law Society;
(4) the stakeholder shall lodge the interim amount on interest-bearing call deposit with a bank registered under the Reserve Bank of New Zealand Act 1989 in the joint names of the vendor and the purchaser;
(5) the interest earned on the interim amount net of any withholding tax and any bank or legal administration fees and commission charges shall follow the destination of the interim amount;
(6) the amount determined to be payable shall not be limited by the interim amount; and
(7) if the parties cannot agree on a stakeholder, the interim amount shall be paid to a stakeholder nominated on the application of either party by the president for the time being of the New Zealand Law Society.

Vendor Default: Late Settlement or Failure to Give Possession

3.14 (1) For the purposes of this subclause 3.14:
(a) the default period means:
(i) in subclause 3.14(2), the period from the settlement date until the date when the vendor is able and willing to provide vacant possession and the purchaser takes possession; and
(ii) in subclause 3.14(3), the period from the date the purchaser takes possession until the date when settlement occurs; and
(iii) in subclause 3.14(5), the period from the settlement date until the date when settlement occurs; and
(b) the vendor shall be deemed to be unwilling to give possession if the vendor does not offer to give possession.
(2) If this agreement provides for vacant possession but the vendor is unable or unwilling to give vacant possession on the settlement date, then, provided that the purchaser provides reasonable evidence of the purchaser's ability to perform the purchaser's obligations under this agreement:
(a) the vendor shall pay the purchaser, at the purchaser's election, either:
(i) compensation for any reasonable costs incurred for temporary accommodation for persons and storage of chattels during the default period; or
(ii) an amount equivalent to interest at the interest rate for late settlement on the entire purchase price during the default period; and
(b) the purchaser shall pay the vendor an amount equivalent to the interest earned or which would be earned on overnight deposits lodged in the purchaser's lawyer's trust bank account on such portion of the purchase price (including any deposit) as is payable under this agreement on or by the settlement date but remains unpaid during the default period less:
(i) any withholding tax; and
(ii) any bank or legal administration fees and commission charges; and
(iii) any interest payable by the purchaser to the purchaser's lender during the default period in respect of any mortgage or loan taken out by the purchaser in relation to the purchase of the property.
(3) If this agreement provides for vacant possession and the vendor is able and willing to give vacant possession on the settlement date, then, provided the purchaser provides reasonable evidence of the purchaser's ability to perform the purchaser's obligations under this agreement, the purchaser may elect to take possession in which case the vendor shall not be liable to pay any interest or other moneys to the purchaser but the purchaser shall pay the vendor the same amount as that specified in subclause 3.14(2)(b) during the default period. A purchaser in possession under this subclause 3.14(3) is a licensee only.
(4) Notwithstanding the provisions of subclause 3.14(3), the purchaser may elect not to take possession when the purchaser is entitled to take it. If the purchaser elects not to take possession, the provisions of subclause 3.14(2) shall apply as though the vendor were unable or unwilling to give vacant possession on the settlement date.
(5) If this agreement provides for the property to be sold tenanted then, provided that the purchaser provides reasonable evidence of the purchaser's ability to perform the purchaser's obligations under this agreement, the vendor shall on settlement account to the purchaser for incomings which are payable and received in respect of the property during the default period less the outgoings paid by the vendor during that period. Apart from accounting for such incomings, the vendor shall not be liable to pay any other moneys to the purchaser but the purchaser shall pay the vendor the same amount as that specified in subclause 3.14(2)(b) during the default period.
(6) The provisions of this subclause 3.14 shall be without prejudice to any of the purchaser's rights or remedies including any right to claim for any additional expenses and damages suffered by the purchaser.
(7) Where the parties are unable to agree upon any amount payable under this subclause 3.14:
(a) an interim amount shall on settlement be paid to a stakeholder by the party against whom it is claimed until the amount payable is determined;
(b) the interim amount shall be the lower of:
(i) the amount claimed; or
(ii) an amount equivalent to interest at the interest rate for late settlement for the relevant default period on such portion of the purchase price (including any deposit) as is payable under this agreement on or by the settlement date.
(c) the stakeholder shall lodge the interim amount on interest-bearing call deposit with a bank registered under the Reserve Bank of New Zealand Act 1989 in the joint names of the vendor and the purchaser;
(d) the interest earned on the interim amount net of any withholding tax and any bank or legal administration fees and commission charges shall follow the destination of the interim amount;
(e) the amount determined to be payable shall not be limited by the interim amount; and
(f) if the parties cannot agree on a stakeholder the interim amount shall be paid to a stakeholder nominated on the application of either party by the president for the time being of the New Zealand Law Society.

Deferment of Settlement and Possession

3.15 If
(1) this is an agreement for the sale by a commercial on-seller of a household unit; and
(2) a code compliance certificate has not been issued by the settlement date in relation to the household unit,
then, unless the parties agree otherwise (in which case the parties shall enter into a written agreement in the form (if any) prescribed by the Building (Forms) Regulations 2004), the settlement date shall be deferred to the fifth working day following the date upon which the vendor has given the purchaser notice that the code compliance certificate has been issued (which notice must be accompanied by a copy of the certificate).

3.16 If every case, if neither party is ready, willing, and able to settle on the settlement date, the settlement date shall be deferred to the third working day following the date upon which one of the parties gives notice it has become ready, willing, and able to settle.

3.17 If
(1) the property is a unit title;
(2) the settlement date is deferred pursuant to either subclause 3.15 or subclause 3.16; and
(3) the vendor considers on reasonable grounds that an extension of time is necessary or desirable in order for the vendor to comply with the warranty by the vendor in subclause 9.2(3),
(4) then the vendor may extend the settlement date:
(a) where there is a deferment of the settlement date pursuant to subclause 3.15, to the tenth working day following the date upon which the vendor gives the purchaser notice that the code compliance certificate has been issued, provided the vendor gives notice of the extension to the purchaser no later than the second working day after such notice; or
(b) where there is a deferment of the settlement date pursuant to subclause 3.16, to the tenth working day following the date upon which one of the parties gives notice that it has become ready, willing, and able to settle, provided the vendor gives notice of the extension to the purchaser no later than the second working day after such notice.

BL GR

3.18 (1) Where
(a) the transfer of the property is to be registered against a new title yet to be issued; and
(b) a search copy, as defined in section 172A of the Land Transfer Act 1952, of that title is not obtainable by the tenth working day prior to the settlement date,
(c) then, unless the purchaser elects that settlement shall still take place on the agreed settlement date, the settlement date shall be deferred to the tenth working day following the later of the date on which:
(i) the vendor has given the purchaser notice that a search copy is obtainable; or
(ii) the requisitions procedure under clause 6.0 is complete.

(2) Subclause 3.18(1) shall not apply where it is necessary to register the transfer of the property to enable a plan to deposit and title to the property to issue.

4.0 Residential Land Withholding Tax

4.1 If the vendor does not have a conveyancer or the vendor and the purchaser are associated persons, then:
(1) the vendor must provide the purchaser or the purchaser's conveyancer, on or before the second working day before the due date for payment of the first residential land purchase amount payable under this agreement, with:
(a) sufficient information to enable the purchaser or the purchaser's conveyancer to determine to their reasonable satisfaction whether section 54C of the Tax Administration Act 1994 applies to the sale of the property; and
(b) if the purchaser or the purchaser's conveyancer determines to their reasonable satisfaction that section 54C of the Tax Administration Act 1994 does apply, all of the information required by that section and either an RLWT certificate of exemption in respect of the sale or otherwise such other information that the purchaser or the purchaser's conveyancer may reasonably require to enable the purchaser or the purchaser's conveyancer to determine to their reasonable satisfaction the amount of RLWT that must be withheld from each residential land purchase amount;
(2) the vendor shall be liable to pay any costs reasonably incurred by the purchaser or the purchaser's conveyancer in relation to RLWT, including the cost of obtaining professional advice in determining whether there is a requirement to withhold RLWT and the amount of RLWT that must be withheld, if any; and
(3) any payments payable by the purchaser on account of the purchase price shall be deemed to have been paid to the extent that:
(a) RLWT has been withheld from those payments by the purchaser or the purchaser's conveyancer as required by the RLWT rules; and
(b) any costs payable by the vendor under subclause 4.1(2) have been deducted from those payments by the purchaser or the purchaser's conveyancer.

4.2 If the vendor does not have a conveyancer or the vendor and the purchaser are associated persons and if the vendor fails to provide the information required under subclause 4.1(1), then the purchaser may:
(1) defer the payment of the first residential land purchase amount payable under this agreement (and any residential land purchase amount that may subsequently fall due for payment) until such time as the vendor supplies that information; or
(2) on the due date for payment of that residential land purchase amount, or at any time thereafter if payment has been deferred by the purchaser pursuant to this subclause and the vendor has still not provided that information, treat the sale of the property as if it is being made by an offshore RLWT person where there is a requirement to pay RLWT.

4.3 If pursuant to subclause 4.2 the purchaser treats the sale of the property as if it is being made by an offshore RLWT person where there is a requirement to pay RLWT, the purchaser or the purchaser's conveyancer may:
(1) make a reasonable assessment of the amount of RLWT that the purchaser or the purchaser's conveyancer would be required by the RLWT rules to withhold from any residential land purchase amount if the sale is treated in that manner; and
(2) withhold that amount from any residential land purchase amount and pay it to the Commissioner as RLWT.

4.4 Any amount withheld by the purchaser or the purchaser's conveyancer pursuant to subclause 4.3 shall be treated as RLWT that the purchaser or the purchaser's conveyancer is required by the RLWT rules to withhold.

4.5 The purchaser or the purchaser's conveyancer shall give notice to the vendor a reasonable time before payment of any sum due to be paid on account of the purchase price of:
(1) the costs payable by the vendor under subclause 4.1(2) that the purchaser or the purchaser's conveyancer intends to deduct; and
(2) the amount of RLWT that the purchaser or the purchaser's conveyancer intends to withhold.

5.0 Risk and insurance

5.1 The property and chattels shall remain at the risk of the vendor until possession is given and taken.

5.2 If, prior to the giving and taking of possession, the property is destroyed or damaged, and such destruction or damage has not been made good by the settlement date, then the following provisions shall apply:
(1) if the destruction or damage has been sufficient to render the property untenantable and it is untenantable on the settlement date, the purchaser may:
(a) complete the purchase at the purchase price, less a sum equal to any insurance moneys received or receivable by or on behalf of the vendor in respect of such destruction or damage, provided that no reduction shall be made to the purchase price if the vendor's insurance company has agreed to reinstate for the benefit of the purchaser to the extent of the vendor's insurance cover, or
(b) cancel this agreement by serving notice on the vendor in which case the vendor shall return to the purchaser immediately the deposit and any other moneys paid by the purchaser, and neither party shall have any right or claim against the other arising from this agreement or its cancellation;
(2) if the property is not untenantable on the settlement date the purchaser shall complete the purchase at the purchase price less a sum equal to the amount of the diminution in value of the property which, to the extent that the destruction or damage to the property can be made good, shall be deemed to be equivalent to the reasonable cost of reinstatement or repair;
(3) in the case of a property zoned for rural purposes under an operative District Plan, damage to the property shall be deemed to have rendered the property untenantable where the diminution in value exceeds an amount equal to 20% of the purchase price; and
(4) if the amount of the diminution in value is disputed, the parties shall follow the same procedure as that set out in subclause 8.4 for when an amount of compensation is disputed.

5.3 The purchaser shall not be required to take over any insurance policies held by the vendor.

6.0 Title, boundaries and requisitions

6.1 The vendor shall not be bound to point out the boundaries of the property except that on the sale of a vacant residential lot which is not limited as to parcels the vendor shall ensure that all boundary markers required by the Cadastral Survey Act 2002 and any related rules and regulations to identify the boundaries of the property are present in their correct positions at the settlement date.

6.2 (1) The purchaser is deemed to have accepted the vendor's title except as to objections or requisitions which the purchaser is entitled to make and notice of which the purchaser serves on the vendor on or before the earlier of:
(a) the tenth working day after the date of this agreement; or
(b) the settlement date.
(2) Where the transfer of the property is to be registered against a new title yet to be issued, the purchaser is deemed to have accepted the title except as to such objections or requisitions which the purchaser is entitled to make and notice of which the purchaser serves on the vendor on or before the fifth working day following the date the vendor has given the purchaser notice that the title has been issued and a search copy of it as defined in section 172A of the Land Transfer Act 1952 is obtainable.
(3) If the vendor is unable or unwilling to remove or comply with any objection or requisition as to title, notice of which has been served on the vendor by the purchaser, then the following provisions will apply:
(a) the vendor shall notify the purchaser ("a vendor's notice") of such inability or unwillingness on or before the fifth working day after the date of service of the purchaser's notice;
(b) if the vendor does not give a vendor's notice the vendor shall be deemed to have accepted the objection or requisition and it shall be a requirement of settlement that such objection or requisition shall be complied with before settlement;
(c) if the purchaser does not on or before the fifth working day after service of a vendor's notice notify the vendor that the purchaser waives the objection or requisition, either the vendor or the purchaser may (notwithstanding any intermediate negotiations) by notice to the other, cancel this agreement.
(4) In the event of cancellation under subclause 6.2(3), the purchaser shall be entitled to the immediate return of the deposit and any other moneys paid under this agreement by the purchaser and neither party shall have any right or claim against the other arising from this agreement or its cancellation. In particular, the purchaser shall not be entitled to any interest or to the expense of investigating the title or to any compensation whatsoever.

6.3 (1) If the title to the property being sold is a cross lease title or a unit title and there are:
(a) in the case of a cross lease title:
(i) alterations to the external dimensions of any leased structure; or
(ii) buildings or structures not intended for common use which are situated on any part of the land that is not subject to a restricted user covenant;
(b) in the case of a unit title, encroachments out of the principal unit or accessory unit title space (as the case may be):
then the purchaser may requisition the title under subclause 6.2 requiring the vendor:
(c) in the case of a cross lease title, to deposit a new plan depicting the buildings or structures and register a new cross lease or cross leases (as the case may be) and any other ancillary dealings in order to convey good title; or
(d) in the case of a unit title, to deposit an amendment to the unit plan, a redevelopment plan or new unit plan (as the case may be) depicting the principal and/or accessory units and register such transfers and any other ancillary dealings in order to convey good title.

Copyright

BRGL

(2) The words "alterations to the external dimensions of any leased structure" shall only mean alterations which are attached to the leased structure and enclosed.

6.4 Except as provided by section 7 of the Contractual Remedies Act 1979, no error, omission, or misdescription of the property or the title shall enable the purchaser to cancel this agreement but compensation, if claimed by notice before settlement in accordance with subclause 8.1 but not otherwise, shall be made or given as the case may require.

6.5 The vendor shall not be liable to pay for or contribute towards the expense of erection or maintenance of any fence between the property and any contiguous land of the vendor but this proviso shall not enure for the benefit of any subsequent purchaser of the contiguous land; and the vendor shall be entitled to require the inclusion of a fencing covenant to this effect in any transfer of the property.

7.0 Vendor's warranties and undertakings

7.1 The vendor warrants and undertakes that at the date of this agreement the vendor has not:
(1) received any notice or demand and has no knowledge of any requisition or outstanding requirement:
(a) from any local or government authority or other statutory body; or
(b) under the Resource Management Act 1991; or
(c) from any tenant of the property; or
(d) from any other party; or
(2) given any consent or waiver,
which directly or indirectly affects the property and which has not been disclosed in writing to the purchaser.

7.2 The vendor warrants and undertakes that at settlement:
(1) The chattels and all plant, equipment, systems or devices which provide any services or amenities to the property, including, without limitation, security, heating, cooling, or air-conditioning, are delivered to the purchaser in reasonable working order, but in all other respects in their state of repair as at the date of this agreement (fair wear and tear excepted) but failure so to deliver them shall only create a right of compensation.
(2) All electrical and other installations on the property are free of any charge whatsoever.
(3) There are no arrears of rates, water rates or charges outstanding on the property.
(4) Where an allowance has been made by the vendor in the settlement statement for incomings receivable, the settlement statement correctly records those allowances including, in particular, the dates up to which the allowances have been made.
(5) Where the vendor has done or caused or permitted to be done on the property any works:
(a) any permit, resource consent, or building consent required by law was obtained; and
(b) to the vendor's knowledge, the works were completed in compliance with those permits or consents; and
(c) where appropriate, a code compliance certificate was issued for those works.
(6) Where under the Building Act, any building on the property sold requires a compliance schedule:
(a) the vendor has fully complied with any requirements specified in any compliance schedule issued by a territorial authority under the Building Act in respect of the building;
(b) the building has a current building warrant of fitness; and
(c) the vendor is not aware of any reason, that the vendor has not disclosed in writing to the purchaser, which would prevent a building warrant of fitness from being supplied to the territorial authority when the building warrant of fitness is next due.
(7) Since the date of this agreement, the vendor has not given any consent or waiver which directly or indirectly affects the property.
(8) Any notice or demand received by the vendor, which directly or indirectly affects the property, after the date of this agreement:
(a) from any local or government authority or other statutory body; or
(b) under the Resource Management Act 1991; or
(c) from any tenant of the property; or
(d) from any other party,
has been delivered forthwith by the vendor to either the purchaser or the purchaser's lawyer, unless the vendor has paid or complied with such notice or demand. If the vendor fails to so deliver or pay the notice or demand, the vendor shall be liable for any penalty incurred.
(9) Any chattels included in the sale are the unencumbered property of the vendor.

7.3 If the property is or includes part only of a building, the warranty and undertaking in subclause 7.2(6) does not apply. Instead the vendor warrants and undertakes at the date of this agreement that, where under the Building Act the building of which the property forms part requires a compliance schedule:
(1) to the vendor's knowledge, there has been full compliance with any requirements specified in any compliance schedule issued by a territorial authority under the Building Act in respect of the building;
(2) the building has a current building warrant of fitness; and
(3) the vendor is not aware of any reason, that the vendor has not disclosed in writing to the purchaser, which would prevent a building warrant of fitness from being supplied to the territorial authority when the building warrant of fitness is next due.

7.4 The vendor warrants and undertakes that on or immediately after settlement:
(1) If the water and wastewater charges are determined by meter, the vendor will have the water meter read and will pay the amount of the charge payable pursuant to that reading; but if the water supplier will not make special readings, the water and wastewater charges shall be apportioned.
(2) Any outgoings included in the settlement statement are paid in accordance with the settlement statement and, where applicable, to the dates shown in the settlement statement, or will be so paid immediately after settlement.
(3) The vendor will give notice of sale in accordance with the Local Government (Rating) Act 2002 to the territorial authority and regional council in whose district the land is situated and will also give notice of the sale to every other authority that makes and levies rates or charges on the land and to the supplier of water.
(4) Where the property is a unit title, the vendor will notify the body corporate in writing of the transfer of the property and the name and address of the purchaser.

7.5 If the purchaser has not validly cancelled this agreement, the breach of any warranty or undertaking contained in this agreement does not defer the obligation to settle but that obligation shall be subject to the rights of the purchaser at law or in equity, including any rights under subclause 6.4 and any right of equitable set-off.

8.0 Claims for compensation

8.1 If the purchaser claims a right to compensation either under subclause 6.4 or for an equitable set-off:
(1) the purchaser must serve notice of the claim on the vendor on or before the last working day prior to settlement; and
(2) the notice must:
(a) in the case of a claim for compensation under subclause 6.4, state the particular error, omission, or misdescription of the property or title in respect of which compensation is claimed;
(b) in the case of a claim to an equitable set-off, state the particular matters in respect of which compensation is claimed;
(c) comprise a genuine pre-estimate of the loss suffered by the purchaser; and
(d) be particularised and quantified to the extent reasonably possible as at the date of the notice.

8.2 For the purposes of subclause 8.1(1), "settlement" means the date for settlement fixed by this agreement unless, by reason of the conduct or omission of the vendor, the purchaser is unable to give notice by that date, in which case notice may be given on or before the last working day prior to the date for settlement fixed by a valid settlement notice served by either party pursuant to subclause 11.1.

8.3 If the amount of compensation is agreed, it shall be deducted on settlement.

8.4 If the amount of compensation is disputed:
(1) an interim amount shall be deducted on settlement and paid by the purchaser to a stakeholder until the amount of the compensation is determined;
(2) the interim amount must be a reasonable sum having regard to all of the circumstances;
(3) if the parties cannot agree on the interim amount, the interim amount shall be determined by an experienced property lawyer appointed by the parties. The appointee's costs shall be met equally by the parties. If the parties cannot agree on the appointee, the appointment shall be made on the application of either party by the president for the time being of the New Zealand Law Society;
(4) the stakeholder shall lodge the interim amount on interest-bearing call deposit with a bank registered under the Reserve Bank of New Zealand Act 1989 in the joint names of the vendor and the purchaser;
(5) the interest earned on the interim amount net of any withholding tax and any bank or legal administration fees and commission charges shall follow the destination of the interim amount;
(6) the amount of compensation determined to be payable shall not be limited by the interim amount; and
(7) If the parties cannot agree on a stakeholder, the interim amount shall be paid to a stakeholder nominated on the application of either party by the president for the time being of the New Zealand Law Society.

8.5 The procedures prescribed in subclauses 8.1 to 8.4 shall not prevent either party taking proceedings for the specific performance of the contract.

Copyright

BR GR

9.0 Unit title and cross lease provisions

Unit Titles

9.1 If the property is a unit title, sections 144 to 153 of the Unit Titles Act 2010 ("the Act") require the vendor to provide to the purchaser a pre-contract disclosure statement, a pre-settlement disclosure statement and, if so requested by the purchaser, an additional disclosure statement.

9.2 If the property is a unit title, the vendor warrants and undertakes as follows:

(1) The information in the pre-contract disclosure statement provided to the purchaser was complete and correct.

(2) Apart from regular periodic contributions, no contributions have been levied or proposed by the body corporate that have not been disclosed in writing to the purchaser.

(3) Not less than five working days before the settlement date, the vendor will provide:

(a) a certificate of insurance for all insurances effected by the body corporate under the provisions of section 135 of the Act; and

(b) a pre-settlement disclosure statement from the vendor, certified correct by the body corporate, under section 147 of the Act. Any periodic contributions to the operating account shown in that pre-settlement disclosure statement shall be apportioned. There shall be no apportionment of contributions to any long-term maintenance fund, contingency fund or capital improvement fund.

(4) There are no other amounts owing by the owner under any provision of the Act or the Unit Titles Act 1972.

(5) There are no unsatisfied judgments against the body corporate and no proceedings have been instituted against or by the body corporate.

(6) No order or declaration has been made by any Court against the body corporate or the owner under any provision of the Act or the Unit Titles Act 1972.

(7) The vendor has no knowledge or notice of any fact which might give rise to or indicate the possibility of:

(a) the owner or the purchaser incurring any other liability under any provision of the Act or the Unit Titles Act 1972; or

(b) any proceedings being instituted by or against the body corporate; or

(c) any order or declaration being sought against the body corporate or the owner under any provision of the Act or the Unit Titles Act 1972.

(8) The vendor is not aware of proposals to pass any body corporate resolution relating to its rules nor are there any unregistered changes to the body corporate rules which have not been disclosed in writing to the purchaser.

(9) No lease, licence, easement, or special privilege has been granted by the body corporate in respect of any part of the common property which has not been disclosed in writing to the purchaser.

(10) No resolution has been passed and no application has been made and the vendor has no knowledge of any proposal for:

(a) the transfer of the whole or any part of the common property;

(b) the addition of any land to the common property;

(c) the cancellation of the unit plan; or

(d) the deposit of an amendment to the unit plan, a redevelopment plan, or a new unit plan in substitution for the existing unit plan,

which has not been disclosed in writing to the purchaser.

(11) As at settlement, all contributions and other moneys payable by the vendor to the body corporate have been paid in full.

9.3 If the property is a unit title, in addition to the purchaser's rights under sections 149 and 150 of the Act, and if the vendor does not provide the certificates of insurance and the pre-settlement disclosure statement under section 147 in accordance with the requirements of subclause 9.2(3), the purchaser may:

(1) postpone the settlement date until the fifth working day following the date on which that information is provided to the purchaser; or

(2) elect that settlement shall still take place on the settlement date.

9.4 If the property is a unit title, each party specifies that:

(1) the facsimile number of the office of that party's lawyer shall be an address for service for that party for the purposes of section 205(1)(d) of the Act; and

(2) if that party is absent from New Zealand, that party's lawyer shall be that party's agent in New Zealand for the purposes of section 205(2) of the Act.

9.5 If the property is a unit title, any costs owing by the purchaser to the vendor pursuant to section 148(5) of the Act for providing an additional disclosure statement shall be included in the moneys payable by the purchaser on settlement pursuant to subclause 3.8(1). Such costs may be deducted from the deposit if the purchaser becomes entitled to a refund of the deposit upon cancellation or avoidance of this agreement.

Unauthorised Structures – Cross Leases and Unit Titles

9.6 (1) Where structures (not stated in clause 6.0 to be requisitionable) have been erected on the property without:

(a) in the case of a cross lease title, any required lessors' consent; or

(b) in the case of a unit title, any required body corporate consent,

the purchaser may demand within the period expiring on the earlier of:

(i) the tenth working day after the date of this agreement; or

(ii) the settlement date,

that the vendor obtain the written consent of the current lessors or the body corporate (as the case may be) to such improvements ("a current consent") and provide the purchaser with a copy of such consent on or before the settlement date.

(2) Should the vendor be unwilling or unable to obtain a current consent then the procedure set out in subclauses 6.2(3) and 6.2(4) shall apply with the purchaser's demand under subclause 9.6(1) being deemed to be an objection and requisition.

10.0 Conditions and mortgage terms

Particular Conditions

10.1 If particulars of any finance condition(s) are inserted on the front page of this agreement, this agreement is conditional upon the purchaser arranging finance in terms of those particulars on or before the finance date.

10.2 (1) If the purchaser has indicated on the front page of this agreement that a LIM is required:

(a) that LIM is to be obtained by the purchaser at the purchaser's cost;

(b) the purchaser is to request the LIM on or before the fifth working day after the date of this agreement; and

(c) this agreement is conditional upon the purchaser approving that LIM provided that such approval must not be unreasonably or arbitrarily withheld.

(2) If, on reasonable grounds, the purchaser does not approve the LIM, the purchaser shall give notice to the vendor ("the purchaser's notice") on or before the fifteenth working day after the date of this agreement stating the particular matters in respect of which approval is withheld and, if those matters are capable of remedy, what the purchaser reasonably requires to be done to remedy those matters. If the purchaser does not give a purchaser's notice the purchaser shall be deemed to have approved the LIM. If through no fault of the purchaser, the LIM is not available on or before the fifteenth working day after the date of this agreement and the vendor does not give an extension when requested, this condition shall not have been fulfilled and the provisions of subclause 10.8(5) shall apply.

(3) The vendor shall give notice to the purchaser ("the vendor's notice") on or before the fifth working day after receipt of the purchaser's notice advising whether or not the vendor is able and willing to comply with the purchaser's notice by the settlement date.

(4) If the vendor does not give a vendor's notice, or if the vendor's notice advises that the vendor is unable or unwilling to comply with the purchaser's notice, and if the purchaser does not, on or before the tenth working day after the date on which the purchaser's notice is given, give notice to the vendor that the purchaser waives the objection to the LIM, this condition shall not have been fulfilled and the provisions of subclause 10.8(5) shall apply.

(5) If the vendor gives a vendor's notice advising that the vendor is able and willing to comply with the purchaser's notice, this condition is deemed to have been fulfilled, and it shall be a requirement of settlement that the purchaser's notice shall be complied with, and also, if the vendor must carry out work on the property, that the vendor shall obtain the approval of the territorial authority to the work done, both before settlement.

10.3 If the purchaser has indicated on the front page of this agreement that a building report is required, this agreement is conditional upon the purchaser obtaining at the purchaser's cost on or before the tenth working day after the date of this agreement a report on the condition of the buildings and any other improvements on the property that is satisfactory to the purchaser, on the basis of an objective assessment. The report must be prepared in good faith by a suitably-qualified building inspector in accordance with accepted principles and methods. Subject to the rights of any tenants of the property, the vendor shall allow the building inspector to inspect the property at all reasonable times upon reasonable notice for the purposes of preparation of the report. The building inspector may not carry out any invasive testing in the course of inspection without the vendor's prior written consent. If the purchaser avoids this agreement for non-fulfilment of this condition pursuant to subclause 10.8(5), the purchaser must provide the vendor immediately upon request with a copy of the building inspector's report.

10.4 (1) If the purchaser has indicated on the front page of this agreement that OIA Consent is required, this agreement is conditional upon OIA Consent being obtained on or before the Land Act/OIA date shown on the front page of this agreement, the purchaser being responsible for payment of the application fee.

(2) If the purchaser has indicated on the front page of this agreement that OIA Consent is not required, or has failed to indicate whether it is required, then the purchaser warrants that the purchaser does not require OIA Consent.

10.5 If this agreement relates to a transaction to which the Land Act 1948 applies, this agreement is subject to the vendor obtaining the necessary consent by the Land Act/OIA date shown on the front page of this agreement.

10.6 If the Land Act/OIA date is not shown on the front page of this agreement that date shall be the settlement date or a date 65 working days from the date of this agreement whichever is the sooner.

10.7 If this agreement relates to a transaction to which section 225 of the Resource Management Act 1991 applies then this agreement is subject to the appropriate condition(s) imposed by that section.

© Copyright

Operation of Conditions

10.8 If this agreement is expressed to be subject either to the above or to any other condition(s), then in relation to each such condition the following shall apply unless otherwise expressly provided:
(1) The condition shall be a condition subsequent.
(2) The party or parties for whose benefit the condition has been included shall do all things which may reasonably be necessary to enable the condition to be fulfilled by the date for fulfilment.
(3) Time for fulfilment of any condition and any extended time for fulfilment to a fixed date shall be of the essence.
(4) The condition shall be deemed to be not fulfilled until notice of fulfilment has been served by one party on the other party.
(5) If the condition is not fulfilled by the date for fulfilment, either party may at any time before the condition is fulfilled or waived avoid this agreement by giving notice to the other. Upon avoidance of this agreement, the purchaser shall be entitled to the immediate return of the deposit and any other moneys paid by the purchaser under this agreement and neither party shall have any right or claim against the other arising from this agreement or its termination.
(6) At any time before this agreement is avoided, the purchaser may waive any finance condition and either party may waive any other condition which is for the sole benefit of that party. Any waiver shall be by notice.

Mortgage Terms

10.9 Any mortgage to be arranged pursuant to a finance condition shall be upon and subject to the terms and conditions currently being required by the lender in respect of loans of a similar nature.

10.10 If the vendor is to advance mortgage moneys to the purchaser then, unless otherwise stated, the mortgage shall be in the appropriate "fixed sum" form currently being published by Auckland District Law Society Incorporated.

11.0 Notice to complete and remedies on default

11.1 (1) If the sale is not settled on the settlement date, either party may at any time thereafter serve on the other party a settlement notice.
(2) The settlement notice shall be effective only if the party serving it is at the time of service either in all material respects ready, able, and willing to proceed to settle in accordance with this agreement or is not so ready, able, and willing to settle only by reason of the default or omission of the other party.
(3) If the purchaser is in possession, the vendor's right to cancel this agreement will be subject to sections 28 to 36 of the Property Law Act 2007 and the settlement notice may incorporate or be given with a notice under section 28 of that Act complying with section 29 of that Act.

11.2 Subject to subclause 11.1(3), upon service of the settlement notice the party on whom the notice is served shall settle:
(1) on or before the twelfth working day after the date of service of the notice; or
(2) on the first working day after the 13th day of January if the period of twelve working days expires during the period commencing on the 6th day of January and ending on the 13th day of January, both days inclusive,
time being of the essence, but without prejudice to any intermediate right of cancellation by either party.

11.3 (1) If this agreement provides for the payment of the purchase price by instalments and the purchaser fails duly and punctually to pay any instalment on or within one month from the date on which it fell due for payment then, whether or not the purchaser is in possession, the vendor may immediately give notice to the purchaser calling up the unpaid balance of the purchase price, which shall upon service of the notice fall immediately due and payable.
(2) The date of service of the notice under this subclause shall be deemed the settlement date for the purposes of subclause 11.1.
(3) The vendor may give a settlement notice with a notice under this subclause.
(4) For the purpose of this subclause a deposit is not an instalment.

11.4 If the purchaser does not comply with the terms of the settlement notice served by the vendor then, subject to subclause 11.1(3):
(1) Without prejudice to any other rights or remedies available to the vendor at law or in equity, the vendor may:
(a) sue the purchaser for specific performance; or
(b) cancel this agreement by notice and pursue either or both of the following remedies namely:
(i) forfeit and retain for the vendor's own benefit the deposit paid by the purchaser, but not exceeding in all 10% of the purchase price; and/or
(ii) sue the purchaser for damages.
(2) Where the vendor is entitled to cancel this agreement, the entry by the vendor into a conditional or unconditional agreement for the resale of the property or any part thereof shall take effect as a cancellation of this agreement by the vendor if this agreement has not previously been cancelled and such resale shall be deemed to have occurred after cancellation.
(3) The damages claimable by the vendor under subclause 11.4(1)(b)(ii) shall include all damages claimable at common law or in equity and shall also include (but shall not be limited to) any loss incurred by the vendor on any bona fide resale contracted within one year from the date by which the purchaser should have settled in compliance with the settlement notice. The amount of that loss may include:
(a) interest on the unpaid portion of the purchase price at the interest rate for late settlement from the settlement date to the settlement of such resale; and
(b) all costs and expenses reasonably incurred in any resale or attempted resale; and
(c) all outgoings (other than interest) on or maintenance expenses in respect of the property from the settlement date to the settlement of such resale.
(4) Any surplus money arising from a resale as aforesaid shall be retained by the vendor.

11.5 If the vendor does not comply with the terms of a settlement notice served by the purchaser, then, without prejudice to any other rights or remedies available to the purchaser at law or in equity the purchaser may:
(1) sue the vendor for specific performance; or
(2) cancel this agreement by notice and require the vendor forthwith to repay to the purchaser any deposit and any other money paid on account of the purchase price and interest on such sum(s) at the interest rate for late settlement from the date or dates of payment by the purchaser until repayment.

11.6 The party serving a settlement notice may extend the term of the notice for one or more specifically stated periods of time and thereupon the term of the settlement notice shall be deemed to expire on the last day of the extended period or periods and it shall operate as though this clause stipulated the extended period(s) of notice in lieu of the period otherwise applicable; and time shall be of the essence accordingly. An extension may be given either before or after the expiry of the period of the notice.

11.7 Nothing in this clause shall preclude a party from suing for specific performance without giving a settlement notice.

11.8 A party who serves a settlement notice under this clause shall not be in breach of an essential term by reason only of that party's failure to be ready and able to settle upon the expiry of that notice.

12.0 Non-merger

12.1 The obligations and warranties of the parties in this agreement shall not merge with:
(1) the giving and taking of possession;
(2) settlement;
(3) the transfer of title to the property;
(4) delivery of the chattels (if any); or
(5) registration of the transfer of title to the property.

13.0 Agent

13.1 If the name of a licensed real estate agent is recorded on this agreement, it is acknowledged that the sale evidenced by this agreement has been made through that agent whom the vendor appoints as the vendor's agent to effect the sale. The vendor shall pay the agent's charges including GST for effecting such sale.

13.2 The agent may provide statistical data relating to the sale to the Real Estate Institute of New Zealand Incorporated.

14.0 Goods and Services Tax

14.1 If this agreement provides for the purchaser to pay (in addition to the purchase price stated without GST) any GST which is payable in respect of the supply made under this agreement then:
(1) the purchaser shall pay to the vendor the GST which is so payable in one sum on the GST date;
(2) where the GST date has not been inserted on the front page of this agreement the GST date shall be the settlement date;
(3) where any GST is not so paid to the vendor, the purchaser shall pay to the vendor:
(a) interest at the interest rate for late settlement on the amount of GST unpaid from the GST date until payment; and
(b) any default GST;
(4) it shall not be a defence to a claim against the purchaser for payment to the vendor of any default GST that the vendor has failed to mitigate the vendor's damages by paying an amount of GST when it fell due under the GST Act; and
(5) any sum referred to in this clause is included in the moneys payable by the purchaser on settlement pursuant to subclause 3.8(1).

14.2 If the supply under this agreement is a taxable supply, the vendor will deliver a tax invoice to the purchaser on or before the GST date or such earlier date as the purchaser is entitled to delivery of an invoice under the GST Act.

14.3 The vendor warrants that any dwelling and curtilage or part thereof supplied on sale of the property are not a supply to which section 5(16) of the GST Act applies.

BRGR

14.4 (1) Without prejudice to the vendor's rights and remedies under subclause 14.1, where any GST is not paid to the vendor on or within one month of the GST date, then whether or not the purchaser is in possession, the vendor may immediately give notice to the purchaser calling up any unpaid balance of the purchase price, which shall upon service of the notice fall immediately due and payable.
(2) The date of service of the notice under this subclause shall be deemed the settlement date for the purposes of subclause 11.1.
(3) The vendor may give a settlement notice under subclause 11.1 with a notice under this subclause.

15.0 Zero-rating

15.1 The vendor warrants that the statement on the front page regarding the vendor's GST registration status in respect of the supply under this agreement is correct at the date of this agreement.

15.2 The purchaser warrants that any particulars stated by the purchaser in Schedule 2 are correct at the date of this agreement.

15.3 Where the particulars stated on the front page and in Schedule 2 indicate that:
(1) the vendor is and/or will be at settlement a registered person in respect of the supply under this agreement;
(2) the recipient is and/or will be at settlement a registered person;
(3) the recipient intends at settlement to use the property for making taxable supplies; and
(4) the recipient does not intend at settlement to use the property as a principal place of residence by the recipient or a person associated with the recipient under section 2A(1)(c) of the GST Act,
GST will be chargeable on the supply under this agreement at 0% pursuant to section 11(1)(mb) of the GST Act.

15.4 If GST is chargeable on the supply under this agreement at 0% pursuant to section 11(1)(mb) of the GST Act, then on or before settlement the purchaser will provide the vendor with the recipient's name, address, and registration number if any of those details are not included in Schedule 2 or they have altered.

15.5 If any of the particulars stated by the purchaser in Schedule 2 should alter between the date of this agreement and settlement, the purchaser shall notify the vendor of the altered particulars and of any other relevant particulars in Schedule 2 which may not have been completed by the purchaser as soon as practicable and in any event no later than two working days before settlement. The purchaser warrants that any altered or added particulars will be correct as at the date of the purchaser's notification. If the GST treatment of the supply under this agreement should be altered as a result of the altered or added particulars, the vendor shall prepare and deliver to the purchaser or the purchaser's lawyer an amended settlement statement if the vendor has already tendered a settlement statement, and a credit note or a debit note, as the case may be, if the vendor has already issued a tax invoice.

15.6 If
(1) the particulars in Schedule 2 state that part of the property is being used as a principal place of residence at the date of this agreement; and
(2) that part is still being so used at the time of the supply under this agreement,
the supply of that part will be a separate supply in accordance with section 5(15)(a) of the GST Act.

15.7 If
(1) the particulars stated in Schedule 2 indicate that the recipient intends to use part of the property as a principal place of residence by the recipient or a person associated with the recipient under section 2A(1)(c) of the GST Act; and
(2) that part is the same part as that being used as a principal place of residence at the time of the supply under this agreement,
then the references in subclauses 15.3 and 15.4 to "the property" shall be deemed to mean the remainder of the property excluding that part and the references to "the supply under this agreement" shall be deemed to mean the supply under this agreement of that remainder.

16.0 Supply of a Going Concern

16.1 If there is a supply under this agreement to which section 11(1)(mb) of the GST Act does not apply but which comprises the supply of a taxable activity that is a going concern at the time of the supply, then, unless otherwise expressly stated herein:
(1) each party warrants that it is a registered person or will be so by the date of the supply;
(2) each party agrees to provide the other party by the date of the supply with proof of its registration for GST purposes;
(3) the parties agree that they intend that the supply is of a taxable activity that is capable of being carried on as a going concern by the purchaser; and
(4) the parties agree that the supply made pursuant to this agreement is the supply of a going concern on which GST is chargeable at 0%.

16.2 If it subsequently transpires that GST is payable in respect of the supply and if this agreement provides for the purchaser to pay (in addition to the purchase price without GST) any GST which is payable in respect of the supply made under this agreement, then the provisions of clause 14.0 of this agreement shall apply.

17.0 Limitation of Liability

17.1 If any person enters into this agreement as trustee of a trust, then:
(1) That person warrants that:
(a) the person has power to enter into this agreement under the terms of the trust;
(b) the person has properly signed this agreement in accordance with the terms of the trust;
(c) the person has the right to be indemnified from the assets of the trust and that right has not been lost or impaired by any action of that person including entry into this agreement; and
(d) all of the persons who are trustees of the trust have approved entry into this agreement
(2) If that person has no right to or interest in any assets of the trust except in that person's capacity as a trustee of the trust, that person's liability under this agreement will not be personal and unlimited but will be limited to the actual amount recoverable from the assets of the trust from time to time ("the limited amount"). If the right of that person to be indemnified from the trust assets has been lost or impaired, that person's liability will become personal but limited to the extent of that part of the limited amount which cannot be recovered from any other person.

18.0 Counterparts

18.1 This agreement may be executed in two or more counterparts, all of which will together be deemed to constitute one and the same agreement. A party may enter into this agreement by signing a counterpart copy and sending it to the other party, including by facsimile or e-mail.

Copyright July 2016

FURTHER TERMS OF SALE

**See Further Terms of Sale *attached*

Auckland District Law Society Inc & Real Estate Institute of New Zealand Inc
© Copyright
July 2016

SCHEDULE 1

List all chattels included in the sale

(strike out or add as applicable)

~~**Stove**~~ ~~**Fixed floor coverings**~~ ~~**Blinds**~~ ~~**Curtains**~~ ~~**Light fittings**~~

BR GR

SCHEDULE 2
(GST Information – see clause 15.0)

This Schedule must be completed if the vendor has stated on the front page that the vendor is registered under the GST Act in respect of the transaction evidenced by this agreement and/or will be so registered at settlement. Otherwise there is no need to complete it.

Section 1

1.	The vendor's registration number (if already registered):	
2.	Part of the property is being used as a principal place of residence at the date of this agreement. That part is: (e.g. "the main farmhouse" or "the apartment above the shop")	Yes/No
3.	The purchaser is registered under the GST Act and/or will be so registered at settlement.	Yes/No
4.	The purchaser intends at settlement to use the property for making taxable supplies.	Yes/No

If the answer to either or both of questions 3 and 4 is "No", go to question 7

5. (a)	The purchaser's details are as follows: Full name:	
(b)	Address:	
(c)	Registration number (if already registered):	
6.	The purchaser intends at settlement to use the property as a principal place of residence by the purchaser or by a person associated with the purchaser under section 2A(1)(c) of the GST Act (connected by blood relationship, marriage, civil union, de facto relationship or adoption).	Yes/No
	OR	
	The purchaser intends at settlement to use part of the property (and no other part) as a principal place of residence by the purchaser or by a person associated with the purchaser under section 2A(1)(c) of the GST Act. That part is: (e.g. "the main farmhouse" or "the apartment above the shop")	Yes/No
7.	The purchaser intends to direct the vendor to transfer title to the property to another party ("nominee").	Yes/No

If the answer to question 7 is "Yes", then please continue. Otherwise, there is no need to complete this Schedule any further.

Section 2

8.	The nominee is registered under the GST Act and/or is expected by the purchaser to be so registered at settlement.	Yes/No
9.	The purchaser expects the nominee at settlement to use the property for making taxable supplies.	Yes/No

If the answer to either or both of questions 8 and 9 is "No", there is no need to complete this Schedule any further.

10. (a)	The nominee's details (if known to the purchaser) are as follows: Full name:	
(b)	Address:	
(c)	Registration number (if already registered):	
11.	The purchaser expects the nominee to intend at settlement to use the property as a principal place of residence by the nominee or by a person associated with the nominee under section 2A(1)(c) of the GST Act (connected by blood relationship, marriage, civil union, de facto relationship or adoption).	Yes/No
	OR	
	The purchaser expects the nominee to intend at settlement to use part of the property (and no other part) as a principal place of residence by the nominee or by a person associated with the nominee under section 2A(1)(c) of the GST Act. That part is: (e.g. "the main farmhouse" or "the apartment above the shop").	Yes/No

WARNING *(This warning does not form part of this agreement)*

This is a binding contract. **Read the information set out on the back page before signing.**

Acknowledgements

Where this agreement relates to the sale of a residential property and this agreement was provided to the parties by a real estate agent, or by a licensee on behalf of the agent, the parties acknowledge that they have been given the guide about the sale of residential property approved by the Real Estate Agents Authority.

Where this agreement relates to the sale of a unit title property, the purchaser acknowledges that the purchaser has been provided with a pre-contract disclosure statement under section 146 of the Unit Titles Act 2010.

Signature of purchaser(s)

.....

.....

Signature of vendor(s)

B - Kenton (director)

.....

WDC APPROVED

COMPUTER FREEHOLD REGISTER
UNDER LAND TRANSFER ACT 1952

Search Copy

R.W. Muir
Registrar-General
of Land

Identifier	**761973**
Land Registration District	**Wellington**
Date Issued	02 December 2016

Prior References
654695 654696

Estate	Fee Simple
Area	1.4538 hectares more or less
Legal Description	Lot 1, 3, 6, 8-9, 11-20, 23-24, 26, 28-34 Deposited Plan 500432

Proprietors
Double Dutch Limited

Interests

489872 Notice imposing Building Line Restriction - 22.3.1961 at 2:43 pm (Affects Part Lot 1 DP 500432 formerly Lot 9 DP 22876)

Subject to water drainage rights over part Lot 3 DP 500432 marked A, over part Lot 6 DP 500432 marked D, over part Lot 8 DP 500432 marked F and over part Lot 9 DP 500432 marked G all on DP 500432 created by Transfer 498106 - 19.6.1961 at 12:02 pm

Appurtenant hereto are water drainage rights created by Transfer 498106 - 19.6.1961 at 12:02 pm (Affects Part Lot 1 DP 500432, Part Lot 3 DP 500432 and and Part Lot 12 DP 500432 formerly Lot 9 DP 22876 and affects Lot 6,8-9, 11 DP 500432)

The easements created by Transfer 498106 are subject to Section 9A (3) (a) Land Subdivision in Counties Act 1946

Subject to Part IVA Conservation Act 1987

Subject to Section 11 Crown Minerals Act 1991, excluding the coal and other minerals which remain in cancelled Certificates of Title WN958/74, WN185/268, WN432/154 and WN432/155.

10635291.4 Consent Notice pursuant to Section 221 Resource Management Act 1991 - 2.12.2016 at 4:34 pm

Land Covenant in Easement Instrument 10635291.5 - 2.12.2016 at 4:34 pm

Subject to a right (in gross) to convey electricity over part Lot 14 DP 500432 marked N, over part Lot 15 DP 500432 marked O, over part Lot 16 DP 500432 marked P, over part Lot 17 DP 500432 marked Q, over part Lot 18 DP 500432 marked R, over part Lot 19 DP 500432 marked S, over part Lot 20 DP 500432 marked T, over part Lot 23 DP 500432 marked V, over part Lot 24 DP 500432 marked W and over Lot 26 DP 500432 marked Y all on DP 500432 in favour of Powerco Limited created by Easement Instrument 10635291.6 - 2.12.2016 at 4:34 pm

The easements created by Easement Instrument 10635291.6 are subject to Section 243 (a) Resource Management Act 1991

Subject to a right (in gross) to drain sewage and water and a right (in gross) to convey water over part Lot 12 DP 500432 marked L and a right (in gross) to drain stormwater over part Lot 34 DP 500432 marked AA and over part Lot 18 DP 500432 marked marked AB all on DP 500432 in favour of Whanganui District Council created by Easement Instrument 10635291.7 - 2.12.2016 at 4:34 pm

The easements created by Easement Instrument 10635291.7 are subject to Section 243 (a) Resource Management Act 1991

Subject to a right to drain water over part Lot 9 DP 500432 marked H and over part Lot 11 DP 500432 marked L

WDC APPROVED

and a right to drain water and sewage over part Lot 14 DP 500432 marked M, over part Lot 17 DP 500432 marked Q, over part Lot 18 DP 500432 marked R, over part Lot 19 DP 500432 marked S and over part Lot 20 DP 500432 marked T all on DP 500432 created by Easement Instrument 10635291.8 - 2.12.2016 at 4:34 pm

Appurtenant to Lot 11-12 DP 500432 is a right to drain water and appurtenant to Lot 15 DP 500432 is a right to drain water and sewage created by Easement Instrument 10635291.8 - 2.12.2016 at 4:34 pm

The easements created by Easement Instrument 10635291.8 are subject to Section 243 (a) Resource Management Act 1991

Subject to a right of way, a right to drain water and sewage and a right to convey water, gas, telecommunications and computer media over part Lot 14 DP 500432 marked N, over part Lot 15 DP 500432 marked O, over part Lot 16 DP 500432 marked P, over part Lot 17 DP 500432 marked Q, over part Lot 18 DP 500432 marked R, over part Lot 19 DP 500432 marked S, over part Lot 20 DP 500432 marked T, over part Lot 23 DP 500432 marked V, over part Lot 24 DP 500432 marked W and over part Lot 26 DP 500432 marked Y all on DP 500432 created by Easement Instrument 10635291.9 - 2.12.2016 at 4:34 pm

Appurtenant to Lot 14-20, 23-24, 26 DP 500432 is a right of way, a right to drain water and sewage and a right to convey water, gas, telecommunications and computer media created by Easement Instrument 10635291.9 - 2.12.2016 at 4:34 pm

The easements created by Easement Instrument 10635291.9 are subject to Section 243 (a) Resource Management Act 1991

10635291.10 Mortgage to ANZ Bank New Zealand Limited - 2.12.2016 at 4:34 pm

BRGL

WDC APPROVED

(Lot 23 Robertson)

FURTHER TERMS OF SALE (bulk title – shared access)

1.0 Property

1.1 The Vendor has completed a subdivision and titles have issued for separate lots within the "Springvale Gardens" residential development ("the Development").

1.2 A balance title (Certificate of Title 761973 Wellington Registry) has issued for a number of Lots in the Development for which separate titles are yet to issue ("the Land")

1.3 The Land includes Lot 23 on Deposited Plan 500432 which is the property that is the subject of this Agreement ("the property"). The property comprises 461m2 as shown on the attached Plan.

1.4 The Purchaser warrants that the Purchaser has inspected boundary pegs in respect of the Property and accepts the position of the same.

1.5 Following this Agreement being signed the Vendor will at the Vendor's cost and as expeditiously as possible arrange for a separate Certificate of Title to issue for the property.

2.0 Title

2.1 The Purchaser accepts all existing encumbrances registered against the Certificate of Title.

3.0 Possession and Settlement

3.1 The possession (and settlement) date shall be the later of;

3.1.1 Five (5) working days after the Vendor notifies the Purchaser that a separate Certificate of Title has issued for the property and a search copy of the Title (as defined in section 172A of the Land Transfer Act 1952) is available; or

3.1.2 27th February 2017.

4.0 Services

4.1 The Vendor will provide the following services to point(s) where the section proper meets the access way in from the road. The Purchaser shall be responsible for connection of services to the property from such points (subject to the terms of any Building Contract entered into pursuant to clause 6.0), namely:

4.1.1 Telephone/ultrafast broadband cable;

BR GR

WDC APPROVED

4.1.2 Electricity;

4.1.3 Water;

4.1.4 Gas;

4.1.5 Sewerage;

4.1.6 Stormwater.

5.0 Road Crossing

5.1 The Purchaser shall be responsible for providing the driveway from the section end of the accessway to the garage/dwelling in accordance with building plans and in accordance with the requirements of Whanganui District Council. The Vendor shall not be required to form the driveway to the property beyond such point (other than pursuant to the terms of any Building Contract entered into pursuant to clause 6.0).

6.0 Requirement for Vendor to Construct Dwelling on Property

6.1. This Agreement is subject to and conditional upon the Purchaser and Reuters Homes Limited entering into an Agreement for the construction of a dwelling on the property on or before the 1st day of February 2017. This condition is inserted for the benefit of both parties and may not be waived unilaterally by either party.

7.0 Accruals

7.1 The Vendor and the Purchaser agree that for all purposes the purchase price payable in accordance with this Agreement is the lowest price the parties would have agreed upon at the date of this Agreement for the Sale and Purchase of the property if title was available and settlement able to be completed forthwith.

8.0 No Caveat

8.1 The Purchaser shall not be entitled to caveat the title to the land the Property forms part of pending settlement.

9.0 Vendor Not Bound

9.1 The Vendor shall not be bound by this Agreement until it is signed by the Vendor.

10.0 Armstrong Barton

10.1 The Vendor and the Purchaser acknowledge and agree that Armstrong Barton is acting for both parties in respect of this transaction. Each party is entitled to take independent

BR GR

WDC APPROVED

advice but neither wishes to take such independent advice at the date of this Agreement. They further acknowledge the need to take independent advice in the event of actual conflict.

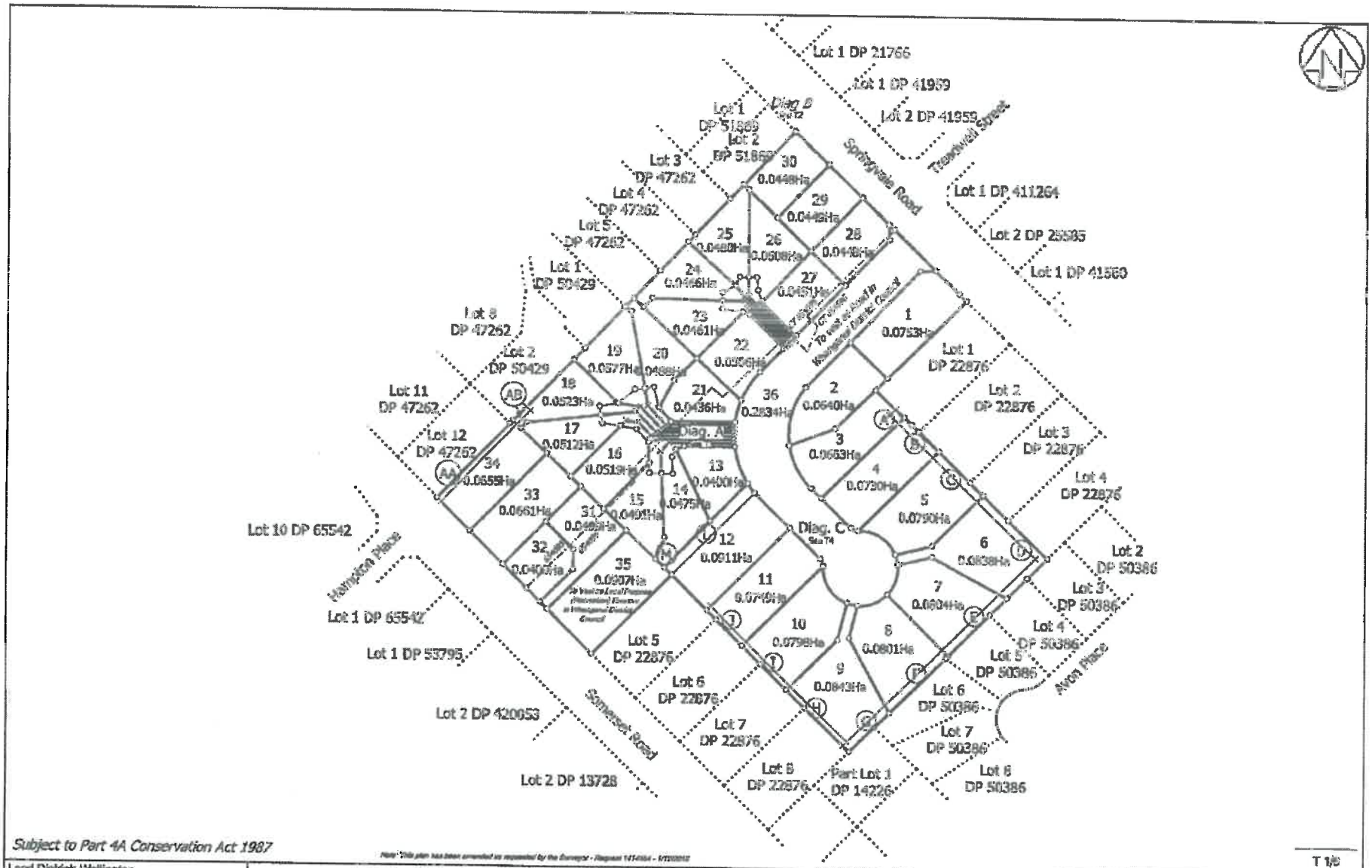

WDC APPROVED

WDC APPROVED

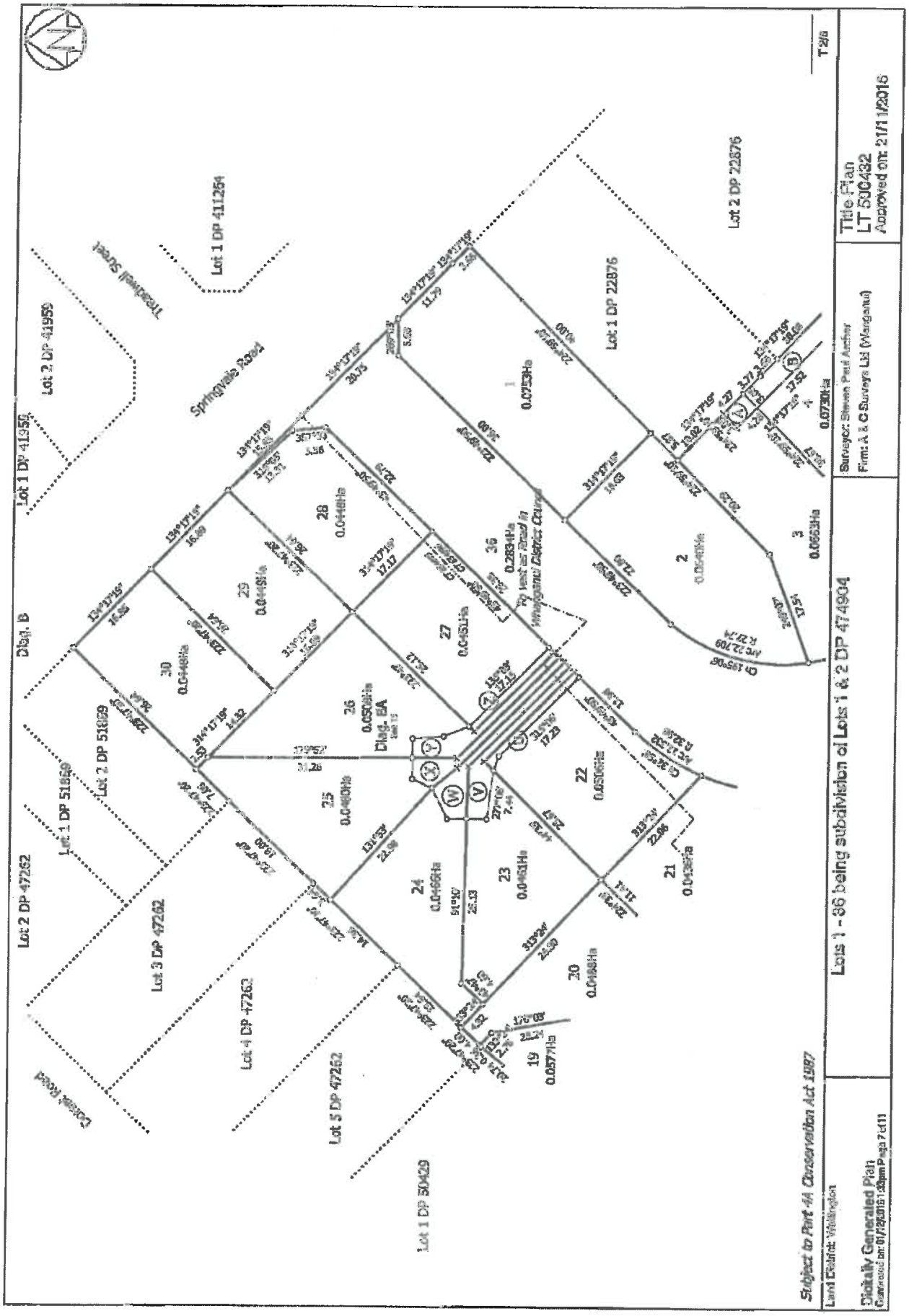

WDC APPROVED

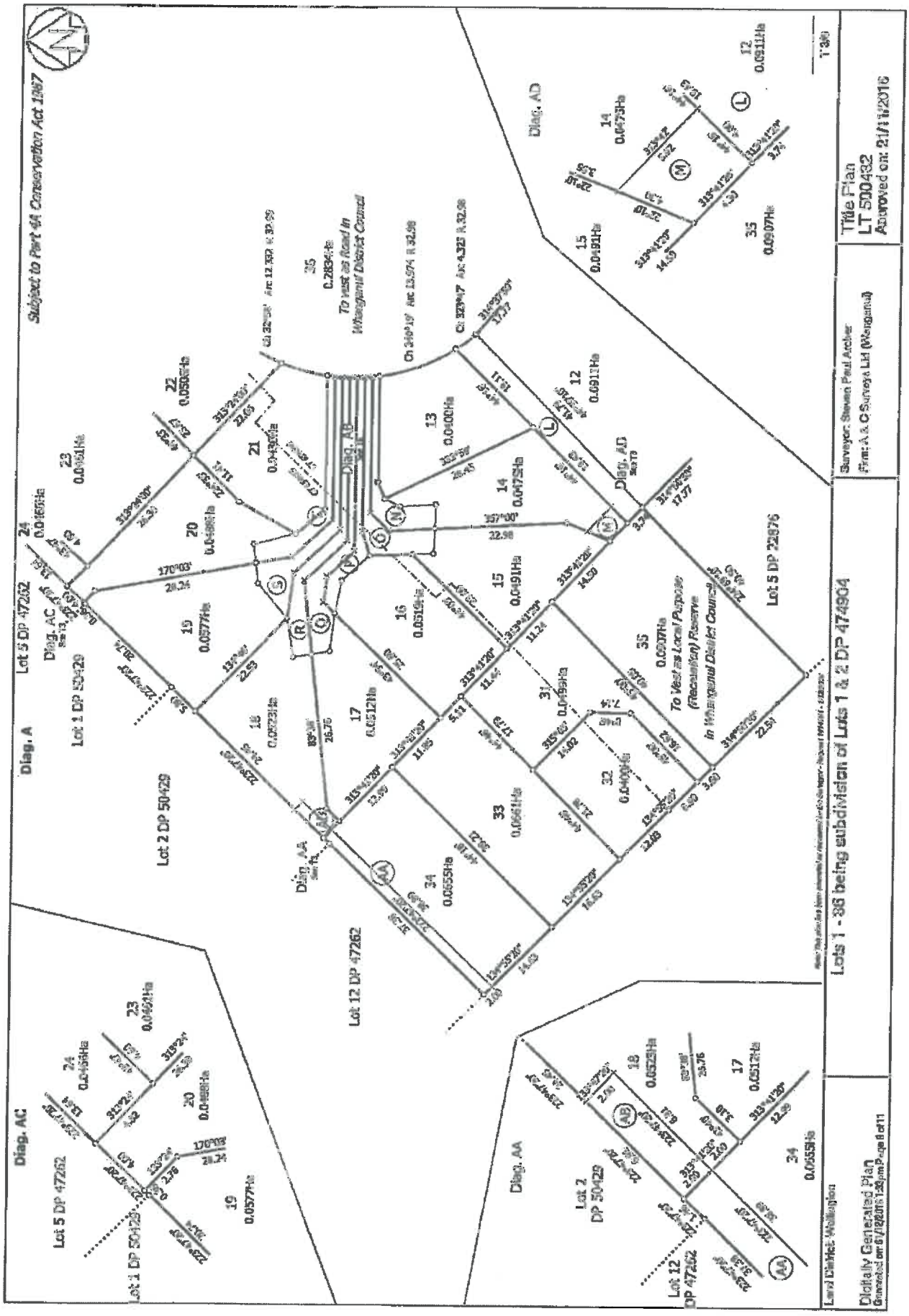

WDC APPROVED

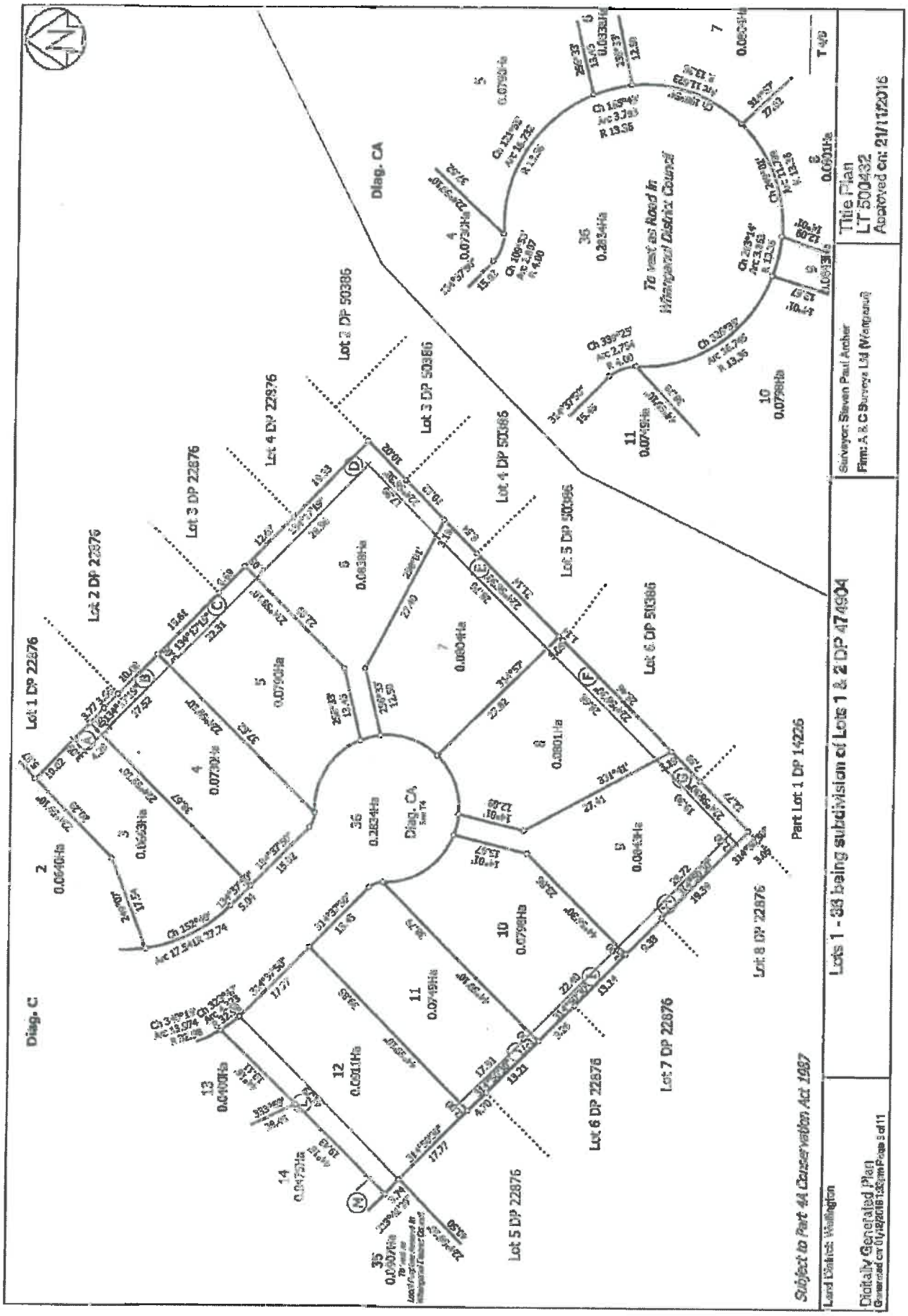

WDC APPROVED

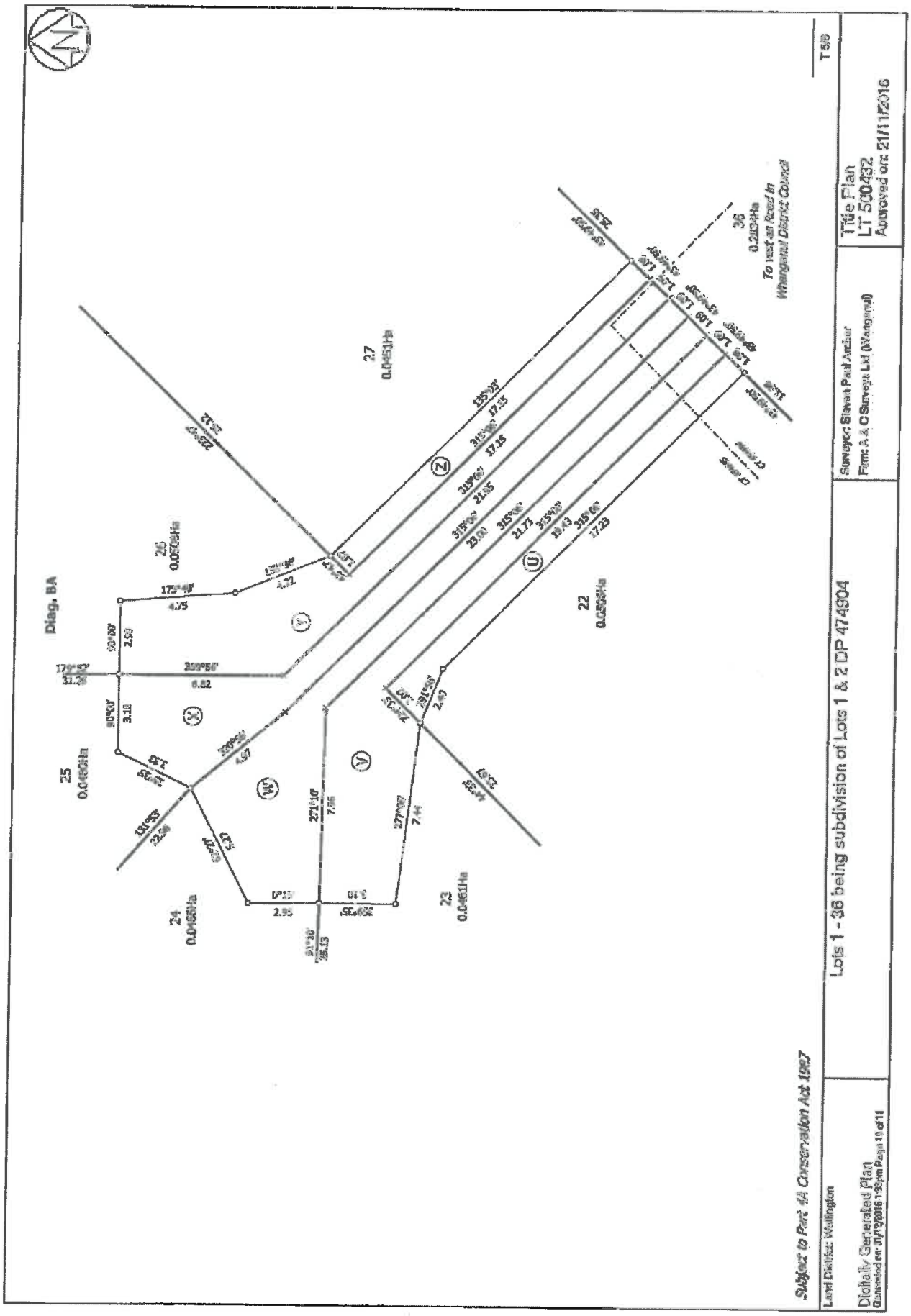

WDC APPROVED

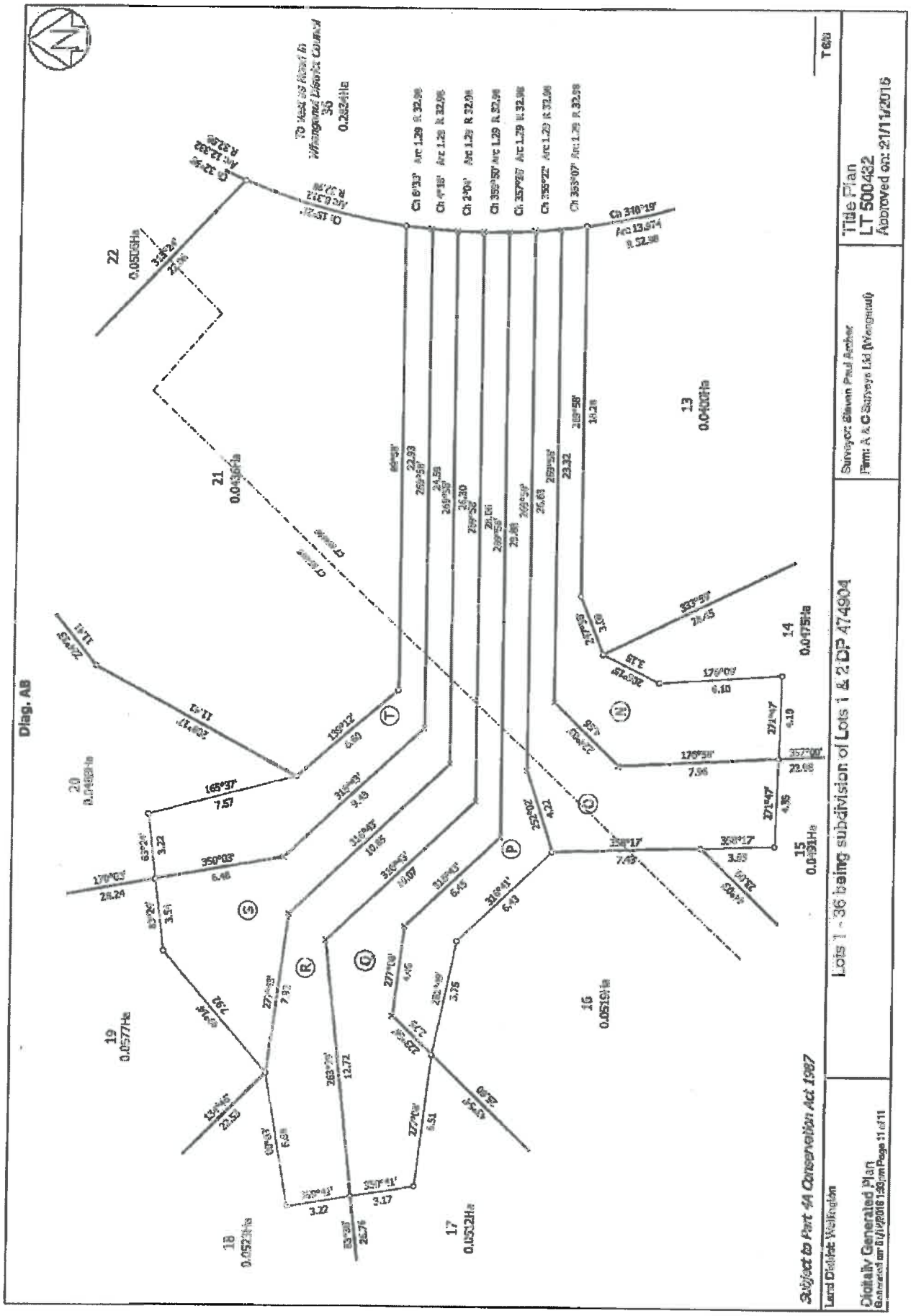

BRGR

BEFORE SIGNING THE AGREEMENT

- It is recommended both parties seek professional advice before signing. This is especially so if:
  - there are any doubts. Once signed, this will be a binding contract with only restricted rights of termination.
  - property such as a hotel or a farm is being sold. The agreement is designed primarily for the sale of residential and commercial property.
  - the property is vacant land in the process of being subdivided or there is a new unit title or cross lease to be issued. In these cases additional clauses may need to be inserted.
  - there is any doubt as to the position of the boundaries.
  - the purchaser wishes to check the weathertightness and soundness of construction of any dwellings or other buildings on the land.
- The purchaser should investigate the status of the property under the Council's District Plan. The property and those around it are affected by zoning and other planning provisions regulating their use and future development.
- The purchaser should investigate whether necessary permits, consents and code compliance certificates have been obtained from the Council where building works have been carried out. This investigation can be assisted by obtaining a LIM from the Council.
- The purchaser should compare the title plans against the physical location of existing structures where the property is a unit title or cross lease. Structures or alterations to structures not shown on the plans may result in the title being defective.
- In the case of a unit title, before the purchaser enters into the agreement:
  - the vendor **must** provide to the purchaser a pre-contract disclosure statement under section 146 of the Unit Titles Act 2010;
  - the purchaser should check the minutes of the past meetings of the body corporate, enquire whether there are any issues affecting the units and/or the common property, check the body corporate's long term maintenance plan and enquire whether the body corporate has imposed or proposed levies for a long term maintenance fund or any other fund for the maintenance of, or remedial or other work to, the common property.
- The vendor should ensure the warranties and undertakings in clauses 7.0 and 9.0:
  - are able to be complied with; and if not
  - the applicable warranty is deleted from the agreement and any appropriate disclosure is made to the purchaser.
- Both parties should ensure the chattels list in Schedule 1 is accurate.
- Before signing this agreement, both parties should seek professional advice regarding the GST treatment of the transaction. This depends upon the GST information supplied by the parties and could change before settlement if that information changes.

THE ABOVE NOTES ARE NOT PART OF THIS AGREEMENT AND ARE NOT A COMPLETE LIST OF MATTERS WHICH ARE IMPORTANT IN CONSIDERING THE LEGAL CONSEQUENCES OF THIS AGREEMENT.

PROFESSIONAL ADVICE SHOULD BE SOUGHT REGARDING THE EFFECT AND CONSEQUENCES OF ANY AGREEMENT ENTERED INTO BETWEEN THE PARTIES.

THE PURCHASER IS ENTITLED TO A COPY OF ANY SIGNED OFFER AT THE TIME IT IS MADE.

AGREEMENT FOR SALE AND PURCHASE OF REAL ESTATE

© This form is copyright to the Real Estate Institute of New Zealand Incorporated and Auckland District Law Society Incorporated

DATE: 2017

VENDOR:
DOUBLE DUTCH LIMITED

Contact Details:

VENDOR'S LAWYERS:

Firm: Armstrong Barton

Individual Acting: DA Robertson

Contact Details:
8 Bell Street (PO Box 441)
Whanganui 4541
Ph: 06 349 1599
Fax: 06 345 5399
Email: david.robertson@armstrongbarton.co.nz

PURCHASER:
Gayleen Irene ROBERTSON and Stephen Andrew ROBERTSON, 12 Bankwood Rd, Chartwell, Hamilton

Contact Details:

PURCHASER'S LAWYERS:

Firm:

Individual Acting:

Contact Details:

~~LICENSED REAL ESTATE AGENT~~:
PRIVATE TREATY

~~Agent's Name~~:

~~Manager~~:

~~Salesperson~~:

~~Contact Details~~:

WDC APPROVED

ARDEX WPM 001

Superflex Bathroom & Balcony Premixed - 1 Part

Single Component Undertile Waterproofing Membrane

BRANZ Appraised

Low VOC content – meets Green Building Council of Australia Green Star IEQ-13 requirements

Fast drying one part acrylic membrane

DISCLAIMER The technical details, recommendations and other information contained in this data sheet are given in good faith and represent the best of our knowledge and experience at the time of printing. It is your responsibility to ensure that our products are used and handled correctly and in accordance with any applicable New Zealand Standard, our instructions and recommendations and only for the uses they are intended. We also reserve the right to update information without prior notice to you to reflect our ongoing research and development program. Country specific recommendations, depending on local standards, codes of practice, building regulations or industry guidelines, may effect specific installation recommendations. The supply of our products and services is also subject to certain terms, warranties and exclusions, which may have already been disclosed to you in prior dealings or are otherwise available to you on request. You should make yourself familiar with them.

WDC APPROVED

ARDEX WPM 001

Superflex Bathroom & Balcony Premixed - 1 Part Undertile Waterproofing Membrane

BRANZ Appraised
Appraisal No.472 [2011]

BRANZ Appraised
Appraisal No.473 [2011]

PRODUCT DESCRIPTION

Ardex WPM 001 (Superflex Bathroom & Balcony Premixed 1 Part) is a tough, ready to use waterproofing membrane specifically designed for use under tiles. Ardex WPM 001 has been uniquely formulated with synthetic microfibres to increase its strength and eliminate the need for a separate reinforcement mat. Ardex WPM 001 is based on the most advanced acrylic polymer technology, and is totally resistant to re-emulsification once cured.

Ardex WPM 001 is flexible, safe to use, low in odour, and is fully compatible with polymer modified tile adhesives. Ardex WPM 001 is one of the fastest drying one part acrylic membranes on the market – normally ready to tile in 48 hours @ 23°C.

Ardex WPM 001 meets the Green Building Council of Australia Green Star IEQ-13 requirements for Architectural Sealant when tested in accordance with SCAQMD Method 304-91 Determination of Volatile Organic Compounds (VOC) in Various Materials as referenced by South Coast Air Quality Management Division (SCAQMD) Rule 1168.

FEATURES/BENEFITS

- Fast drying Ardex WPM 001 can be tiled over in 48 hours in non critical areas*
- Liquid reinforced: Excellent strength, eliminates need for reinforcing mat
- Flexible: Accommodates normal building movement class 3 membrane as per AS/NZ 4858: 2004 Wet Area Membranes
- Advanced acrylic: Will not re-emulsify once cured
- Designed for tiling - Fully compatible with Ardex tile adhesive systems
- Water based, safe to use, low odour & easy cleaning
- CSIRO Appraisal #91 for undertile waterproofing in shower recesses
- Conforms to the requirements of AS/NZ 4858: 2004 Wet Area Membranes. (Ref: CSIRO Report 3779)

*Critical areas include areas where the membrane is applied at greater than 0.5mm or over impermeable substances such as over bond breakers or incorporating other reinforcement. Longer drying times are necessary in these areas.

APPLICATION RANGE

Performance Levels
Commercial and residential

Location
Internal wet areas, balconies, decks, and other areas that will be tiled or otherwise protected from regular foot traffic.

Surfaces
Walls & floors

Substrates

Concrete	Cured for min. 28 days or sealed when set with one coat of Ardex WPM 300 (HydrEpoxy 300) at a coverage rate of 3.0 square metres per litre and allowed to cure overnight. External wet concrete should be allowed to dry thoroughly or sealed with one coat of Ardex WPM 300 as above.
Renders and screeds	Cured for min. 7 days or sealed when set with one coat of Ardex WPM 300 at a coverage rate of 3.0 square metres per litre and allowed to cure overnight. Wet render should be allowed to dry thoroughly or sealed with one coat of Ardex WPM 300 as above.
Fibre cement	Suitable for wet area grade fibre cement.
Plasterboard	Wet area grade only.
Plywood	Structural plywood (PAA branded), marine grade or other wet area grade only.
Particleboard	Wet area grade, internal use only (special preparation is required – contact Ardex).
Permanent Immersion	In conditions of permanent immersion, it is recommended that Ardex WPM 002 (Superflex Two Part) is used. Must be covered with tiles for full immersion.

Contact Ardex for use over existing membranes, covering materials, and any other substrates not listed.

SPECIFICATION CLAUSE

ARDEX WPM 001 (Superflex Premixed)
The waterproofing membrane shall be Ardex WPM 001: a one part acrylic modified fibre reinforced membrane formulated to provide a tough, long lasting water barrier under tiling systems.

PACKAGING

Single component: 20kg (approx 15 litres) or 6.5kg (approx 5 litres).

TABLE 1

	Thickness per Coat		Total Dry Film Thickness (2 coats)	Theoretical Coverage		Per Unit
	Dry Film	Wet Film		Per coat	For 2 coats	
FLOORS	0.5mm	1.0mm	1.0mm	15m²	7.5m²	20kg(15L) unit
WALLS	0.25mm	0.5mm	0.5mm	30m²	15m²	20kg(15L) unit

SHELF LIFE

12 months when stored in the original unopened packaging, in a dry place at 23°C. Do not store in direct sunlight. Replace lid tightly after use. Use remaining contents from part used containers within 3 months.

COVERAGE

Two coats are recommended for an effective waterproof membrane.

Coverage will vary depending on the porosity of the surface.

One 20kg (15 litre) unit will cover approximately 7.5-15m² (based on two coats) depending on area requirements between wall and floor surfaces to be treated. Refer Table I.

DRYING TIMES

Recoat time

1-2 hours at (23°C/50% RH) between first and second coats. Alternatively, if a polyester mat is used between coats then the second coat can be applied whilst the first coat is still wet.

Dry through

The slowest drying areas are those where the membrane has been applied over a silicone bond breaker, eg. wall and floor junctions. The membrane cannot be tiled over until these critical areas are completely dry. Ardex WPM 001 is totally dry in 48 hours at 23°C/50% RH, but can take up to 72 hours at 10°C/50% RH in corners or for thick films.

Fully cured

The shower should not be used until the membrane has reached its full strength. Ardex WPM 001 membrane is fully cured after 3 days at 23°C, or after 5 days at 10°C.

Drying times will vary depending on humidity, surface temperature and surface porosity.

Do not apply on substrates where the surface temperature is below 10°C or above 35°C.

CLEANING

Wash hands, brushes, rollers, etc, with water while the membrane is still fresh. Remove cured material with mineral turpentine.

SAFETY PRECAUTIONS

Do not use the product in the following situations:

- Areas subject to negative hydrostatic pressure or rising damp, unless treated with Ardex WPM 300.
- Where the substrate is wet – wet surfaces can be sealed with one coat of Ardex WPM 300 at a coverage rate of 3.0 square metres per litre and allowed to cure overnight.
- Where rain is imminent.
- Where the membrane will be left exposed and subjected to regular foot traffic.
- On glazed, glass or other totally impervious surfaces (eg. areas pre-treated with water repellants).
- Where the surface temperature is below 10°C or greater than 35°C.
- All floor areas must have adequate falls either built into the substrate or achieved with a sand/cement screed prior to application of the Ardex WPM 001.

For substrates or situations other than those listed contact Ardex.

SAFETY DATA

Ardex WPM 001 is non-hazardous and non dangerous. It may produce discomfort of the eyes, respiratory tract and skin. Do not breathe gas/fumes/vapour/spray. Avoid contact with skin. Wear eye/face protection. In case of contact with eyes, rinse with plenty of water and seek medical advice.

ADDITIONAL INFORMATION IS LISTED IN THE MATERIAL SAFETY DATA SHEET.

QUALITY PRODUCT

Ardex WPM 001 is manufactured and tested to Ardex procedures which are maintained in accordance with Quality System Standard ISO 9001.

WDC APPROVED

ARDEX WPM 001

Superflex Bathroom & Balcony Premixed - 1 Part Undertile Waterproofing Membrane

USER NOTES

The technical details and recommendations contained in this data sheet are given in good faith and represent the best of our knowledge and experience at the time of printing. It is the responsibility of the user to ensure that the product is used in accordance with Ardex instructions and in applications for which they are intended.

APPLICATION

Apply Ardex WPM 001 by brush or roller. A medium nap (12-15mm pile) paint roller is recommended. New rollers should be dampened with water before being used for the first time.

For best results with a paint brush use a good quality, 50mm long bristle variety.

To achieve the required dry film thickness per coat, application must consist of laying the product onto the surface and light finish the surface. Do not try to apply in the same manner as a building paint. A conventional building paint is normally applied at 25-40 micrometers wet film thickness while Ardex WPM 001 needs to be applied at between 0.5 and 1.0 mm per coat depending on product and application (Refer Table 1).

Critical Areas:

INTERNAL WET AREAS

1. Construction should be in accordance with Australian 3740 - 2004 Waterproofing of wet areas within residential buildings.
2. All render and tile bed requirements should be completed before application of the membrane and tiles or other floor coverings should be direct bonded to the membrane.
3. Ensure wall & floor sheets are installed as per sheet manufacturer's recommendations.
4. Ensure suitable brick/concrete hobs are used (do not use timber).
5. Ensure that falls to the waste are min 1:60 (ie. approx. 30mm in 2mtr)) before waterproofing. Ensure outlet pipes are fixed securely and that the waste or drainage flanges are recessed into the floor.
6. Avoid sheet joints in shower recess floor. Ensure that sheets are securely fixed to the wall at the bottom edge, and sheet joints are sealed with a neutral cure silicone sealant spread approximately 6mm on either side of the joint.
7. Treat nail and screw holes with neutral cure silicone sealant.
8. Seal the perimeters of taps, shower outlets and waste outlets with neutral cure silicone sealant.
9. Apply a bead of neutral cure silicone sealant to all horizontal and vertical corners.
10. Apply a bead of neutral cure silicone sealant to the junction of the hob or angle and walls. Spreading the sealant to 6mm on either side of the joint.
11. Waste outlets shall incorporate a puddle flange or similar in accordance with AS3740 & the top surface shall be set flush with the surface to which the membrane is to be applied. A bead of neutral cure silicone shall be applied across the intersection of the puddle flange and the screed/ floor.
12. Apply the membrane to the entire shower recess floor and down into waste or drainage flange. Apply the membrane over the hob and at least 150mm beyond the outside edge of the hob (ideally to entire wet area floor).
13. Apply the membrane 1800mm up the walls or to the height of the shower rose within the shower recess.
14. Install the shower screen to inside edge of the hob.

Fig.1 – Shower Recess – Critical Areas

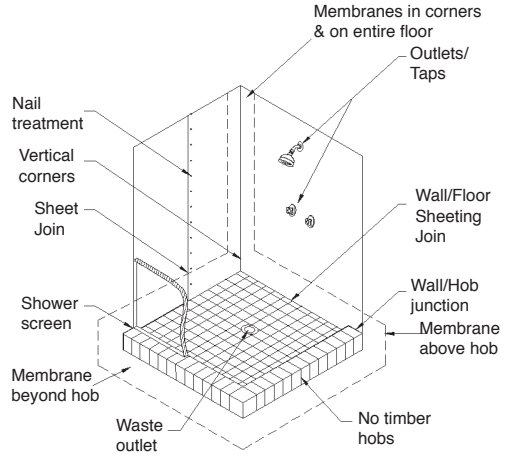

Fig.2 – Balcony – Critical Areas

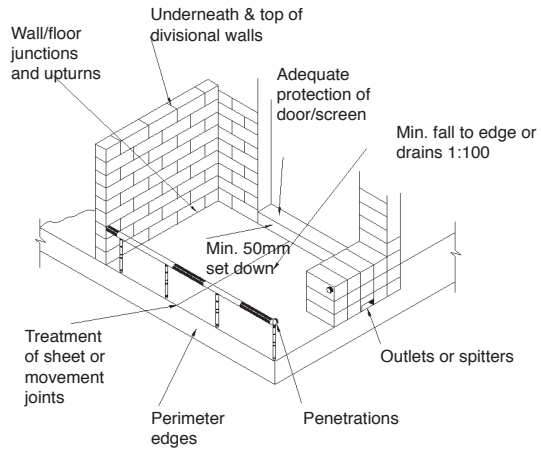

BALCONIES AND DECKS

1. Ensure that the deck is constructed with falls to edge/drains of min 1:100 (ie. 20mm in 2m) or else achieve the fall with a sand/cement screed.
2. Ensure a min set down (step down) of 50mm to the finished floor level (ie. top of tiles).
3. Ensure suitable flashing is installed, ideally prior to the installation of the balcony screen/ sliding door.
4. Treat any sheet joints with a neutral cure silicone prior to waterproofing.
5. Prepare and seal all wall/floor junctions with a bead of neutral cure silicone.
6. Apply the membrane up the step down and as far up underneath the screen door flashing as possible (ideally waterproof prior to installing door).
7. Where possible, apply the membrane prior to building divisional walls, or other items such as planter boxes.
8. Apply the membrane to the entire balcony floor and at least 50mm up the wall above the top surface of the finished tiles and finished below the wall drainage vents.
9. Apply the membrane to the top of the parapets and divisional walls, or else install suitable metal capping.
10. Apply the membrane down over the front edge of the balcony onto the drip rail.
11. Carefully seal any gaps around balcony penetrations prior to applying the membrane.
12. Apply the membrane down into outlets and drains, ensuring excess material is removed.
13. Ensure all weep holes are above the membrane application area.

APPLICATION NOTES

Surface preparation

- Ensure all surfaces are structurally sound and totally dry. The pores of concrete surfaces should be open (absorbent surface). All sheet substrates must be securely fixed in accordance with the manufacturers instructions.
- Falls to outlets of at least 1:60 or approx. 30mm in 2mtr (wet areas) or 1:100 externally, must be achieved prior to tiling.
- The surface to be coated should be free from dust, oil, paint, curing compounds and any other contaminating materials.
- Damaged concrete should be repaired (leveled) and surface defects including all cracks and sharp protrusions should be treated prior to the application of the membrane.
- Remove laitance on concrete or screeds by mechanical means.
- Highly dense (>40MPa) or steel trowelled concrete should be roughened by suitable mechanical means (shot blasting, grinding, etc).

Priming

The primer is a critical part of the waterproofing system. Apply one coat of Ardex WPM 265 (Sheltercoat/ Superflex Water Based Primer) by brush or roller to all areas to be waterproofed including the floor waste. Allow the primer to completely dry prior to the application of the Ardex WPM 001 membrane. This will take around 20-30 minutes depending upon weather conditions and porosity of the substrate. Coverage is approximately 6m^2 per litre. Plastic (eg. PVC) pipes should be primed with a solvent based plumbers pink primer. Prime metal surfaces with a suitable metal primer such as epoxy polyamide primer.

GENERAL APPLICATION

Crack preparation

Cracks <2mm:

Clean and remove any loose particles in the crack. Prime the crack and adjacent area carefully with Ardex WPM 265 and allow to dry before applying two coats of Ardex WPM 001 membrane in a band at least 200mm wide equidistantly across the crack, along the length of the crack.

Cracks 2-6mm:

(Refer Fig. 3) Prepare and prime the crack as above. Apply a bead of neutral cure silicone into the crack and extend it 6mm either side. Apply a 300mm wide band of Ardex WPM 001 equidistantly across the crack along the entire length of the crack. Place a 190mm wide band of Ardex “Deckweb” polyester woven cloth reinforcement over the applied membrane. Thoroughly wet out the cloth preferably using a fluted roller, and remove all creases in, or air pockets under the mat. Immediately apply a second coat to completely fill the mat.

Cracks >6mm:

Contact your local Ardex representative.

Fig.3 Crack Treatments

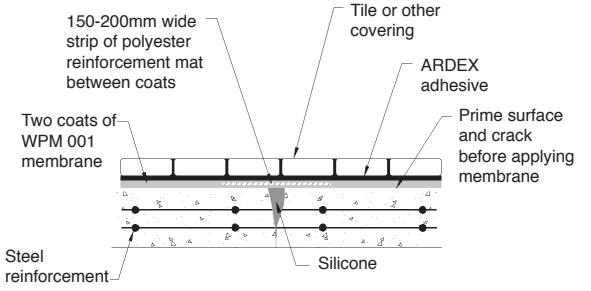

WDC APPROVED

ARDEX WPM 001

Superflex Bathroom & Balcony Premixed - 1 Part Undertile Waterproofing Membrane

Movement/construction joints

Movement joints (<6mm)

Use same procedure as in crack preparation.

Clean and prime the joint before filling it with a bead of neutral cure silicone and extending it 6mm each side of joint. Apply a 300mm wide band of Ardex WPM 001 equidistantly across the crack along the entire length of the crack. Place a 190mm wide band of Ardex "Deckweb" polyester woven cloth reinforcement over the applied membrane. Thoroughly wet out the mat and remove all creases in, or air pockets under the mat. Immediately apply a second coat to completely fill the mat.

Construction joints (>6mm)

Use the same procedure as above, but replace the reinforcing mat with 120mm of Ardex Coving Bandage. Note: if tiling, movement joints should be taken to the surface of the tiles. Fill the joints between the tiles immediately above the movement joints with an appropriate joint sealant. (Refer Fig.4)

Fig.4 Movement Joints

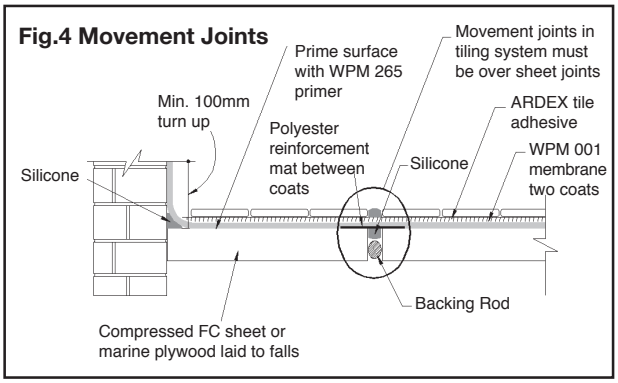

Corners & coving areas

After priming with Ardex WPM 265 and allowing to dry, apply a generous bead (12mm) of neutral cure silicone sealant to seal all junctions between two substrates in coving areas and corners.Smooth over the silicone so that it extends 6mm up the wall and 6mm over the floor and allow to touch dry.

Apply a first coat of Ardex WPM 001 to the area and allow the membrane to dry.

Apply a second coat ensuring that excess product is removed from the junction (the final dry film thickness should be minimum of 1.0mm). Alternatively, if a polyester reinforcement mat is used between coats then the second coat can be applied as soon as the mat is fully bedded into the first coat.

WALL/FLOOR JUNCTION

After priming with Ardex WPM 265 and allowing to dry, apply a generous bead (12mm) of neutral cure silicone sealant to seal all junctions between two substrates. Smooth over the silicone so that it extends 6mm up the wall and 6mm over the floor and allow to touch dry. Place a 190mm wide band of Ardex "Deckweb" polyester woven mat reinforcement over the applied membrane. Thoroughly wet out the cloth and remove all creases in, or air pockets under the mat. Immediately apply a second coat to completely fill the mat. The Ardex WPM 001 should be applied to at least 100 mm up the wall surfaces as per the recommendations for the application of Ardex WPM 001 to floors.

Walls

Two coats of Ardex WPM 001 are required to achieve a minimum total dry film thickness of 0.5mm.

After priming with Ardex WPM 265 and allowing to dry, apply two coats of Ardex WPM 001 (to achieve a minimum dry film thickness of 0.5mm) in two opposite directions. Wall sheet joints should be treated with a neutral cure silicone, PVC duct tape or base jointing compound. In balcony situations take the membrane up underneath any existing cover flashing or install appropriate flashing. Allow the first coat to dry before applying the second coat.

Floors

Two coats of Ardex WPM 001 are required to achieve a minimum total dry film thickness of 1.0mm. The flooring recommendations should be extended at least 150 mm up all perimeter walls.

Prime the surface with Ardex WPM 265 and allow to dry.

Apply the first coat over the primed surface and allow it to dry (1-2 hours at 23°C, 50%RH) before applying a second coat in an opposite direction. In shower recesses a drainage flange must be installed on all timber/sheeted floors, and are strongly recommended on all other substrates. Where possible rebate the flange into the floor. Seal the perimeter of the flange with neutral cure silicone treatment. If a flange is not installed the membrane must be applied down into the pipe. (Refer Fig.5) Allow the membrane to dry completely before tiling. Refer drying times above.

Waste Outlet

Prime the surface with Ardex WPM 265 and allow to dry. Surfaces of the outlet flange must be primed with an appropriate primer.

Apply Ardex WPM 001 over the adjacent floor surface extending down into the waste outlet flange overlapping the edge of flange by at least 30mm. Place Ardex "Deckweb" polyester woven mat reinforcement over the applied membrane. Thoroughly wet out the cloth and remove all creases in, or air pockets under the mat. Immediately apply a second coat to completely fill the mat. (Refer Fig. 5)

Fig.5 – Waste outlet

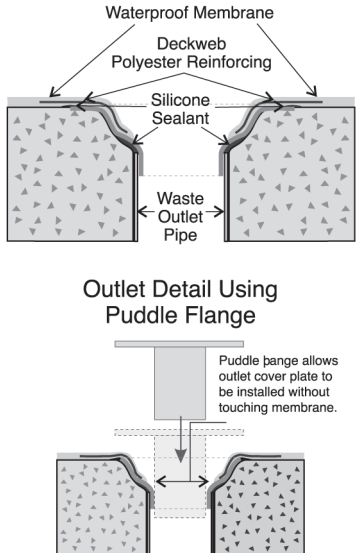

Balcony penetrations (Refer Fig.6)

All upstands are to be mechanically fixed through the membrane, which must be fabricated with a base plate flange.

Prime the metal with an appropriate metal primer such as an epoxy polyamide primer and allow to dry. Apply a 10mm bead of neutral cure silicone around the perimeter of the penetration. Apply the first coat of Ardex WPM 001 on the substrate and the flanged metal.

Allow first coat to dry before applying a second coat ensuring a finished dry film thickness of no less than 1.0mm is achieved. Place a suitable flashing collar around the penetration sealing it with a suitable sealant.

Fig.6 – Balcony Penetration

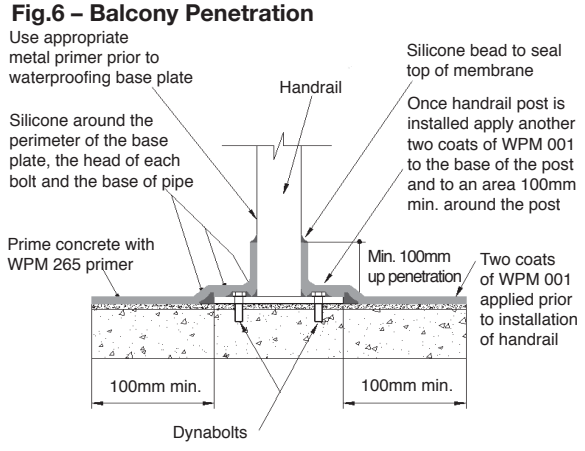

Tiling systems

It is advisable to conduct a flood test of the shower once the membrane has cured (normally after 72 hours), and before the tiling commences. A broad range of Ardex tile adhesives can be used over Ardex membranes. Contact Ardex or your nearest Ardex stockist for advice on the most suitable system.

TECHNICAL DATA

Ardex WPM 001 (Superflex Premixed)
Characteristics of liquid

Form & Colour	Blue viscous paste
Type	Single part
Specific Gravity	Approx. 1.34kg/litre
pH of Liquid	8.5
Viscosity of Liquid (RVT Brookfield, spindle 7 speed 10)	52,000cps
Non Volatile Matter (volume) AS1321.10	50.3%±1
Tensile Strength 7 days dry AS1145	1.04 MPa
Full Cure	1.92 MPa
Elongation at Break 7 days dry AS1145	780%

Conforms to requirements of class 3 membrane of AS/NZ 4858: 2004 Wet Area Membranes.

NOTE: Most of the tests have been carried out in the Ardex laboratory under standard conditions (23±2°C, 50±5% R.H)

Quickbrace™ Design Solutions

Quickbrace™ Numbering System

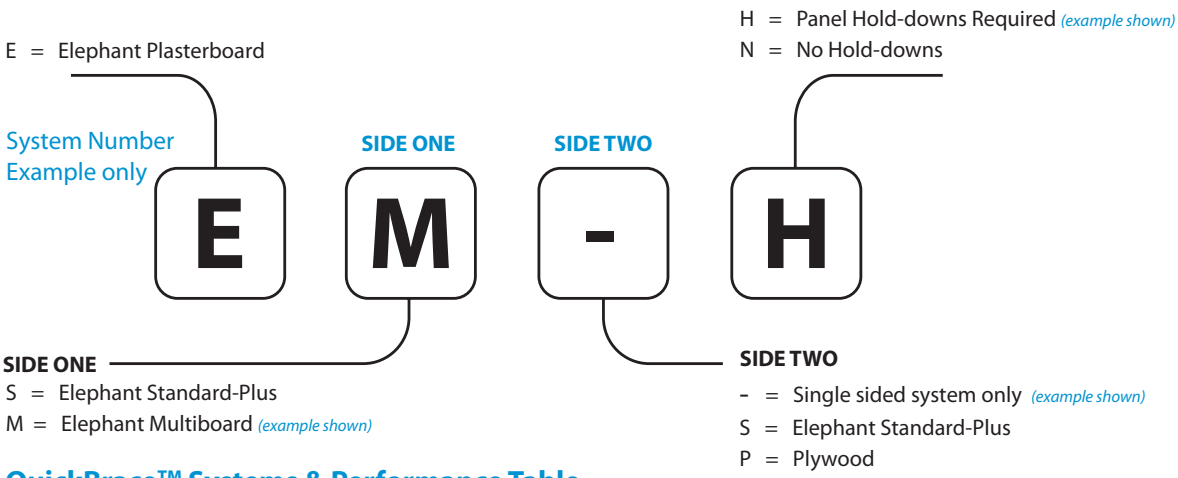

QuickBrace™ Systems & Performance Table

System Number	Lining Requirement	Min. Length (m)	BU/m		Panel Hold-downs	Bracing Corner Pattern
			Wind	Earth-quake		
Plasterboard on One Side						
ES-N	Elephant Standard-Plus on One Side	0.4	65	60	No	Condensed
		1.2	70	65		
		1.8	80	65		
ES-H	Elephant Standard-Plus on One Side	0.4	80	75	Yes	
		0.8	100	85		
		1.8	115	85		
EM-H	Elephant Multiboard on One Side	0.4	95	100		
		0.8	120	110		
		1.2	140	115		
Plasterboard on Both Sides						
ESSN	Elephant Standard-Plus on Both Sides	0.4	80	75	No	Condensed
		0.8	90	80		
		1.2	95	85		
ESSH	Elephant Standard-Plus on Both Sides	0.4	95	110	Yes	
		0.8	140	130		
		1.2	150	140		
EMSH	Elephant Multiboard on One Side Elephant Standard-Plus on the Other	0.4	110	115		
		0.8	140	135		
		1.2	150	145		
Plasterboard One Side, Plywood the Other						
ESPH	Elephant Standard-Plus on One Side Plywood on the Other	0.4	100	115	Yes	Condensed
		0.8	140	140		
		1.2	150	150		
EMPH	Elephant Multiboard on One Side Plywood on the Other	0.4	120	135		
		0.8	140	145		
		1.2	150	150		

* Timber Floors - It is required by NZS 3604:2011 to limit BU ratings to 120 BU/m for timber floors. For a higher floor frame uplift, a specifically engineered design will be required.

Note- The QuickBrace™ Numbering System and the sub components thereof are protected by copyright.

Wall Bracing Design Sheet One

Manual Method

Design Step One: Determine and Record the Project Specifications

Please photocopy

Project Name _____

Street & Number _____

Lot & DP Number _____

City/Town/District _____

Designer Name _____

Company Name _____

Engineers Name _____

Project Specifications (tick where appropriate)

Storey: Single ☐ Double ☐

Foundation Type: Subfloor ☐ Slab ☐

Single or Upper Floor Level to Apex _____ m

Lower Floor Level to Apex (If Double storey) _____ m

Average Ground Level to Apex (If on Subfloor) _____ m

This Bracing Calculation completed by: _____

Roof Details	
Height above Eaves (h)	m
Roof Cladding	Light/Heavy
Average Roof Pitch (deg.)	
Part Storey in Roof Space	Yes or No

Wall Details	Single/Upper Storey	Lower Storey	Subfloor
Average Internal Stud Height	m	m	m
Wall Cladding	Light/Medium/Heavy	Light/Medium/Heavy	Light/Medium/Heavy
Building length (BL)	m	m	m
Building width (BW)	m	m	m
Gross Plan Area (GPA)	m^2	m^2	m^2
NB. If the average roof pitch is over 25 degrees, use roof length and width to determine BL and BW			

Design Step Two : Determine the Wind and Earthquake Zone

Wind Steps	Determine	Circle One of the following						Reference
1	Topographic Class	T1	T2	T3	T4			Page 7
2	Site Exposure	Sheltered	Exposed					Page 8
3	Ground Roughness	Urban	Open					Page 8
4	Wind Region	A	W					Figure 5.1, NZS 3604:2011
5	Lee Zone	Yes	No					Figure 5.1, NZS 3604:2011
6	Wind Zone	Low	Medium	High	Very High	Extra High	SED	Table Below

Wind Zone Table

Wind Region	Ground Roughness	TOPOGRAPHIC CLASS							
		T1 (Gentle)		T2 (Moderate)		T3 (Significant)		T4 (Extreme)	
		----------SITE EXPOSURE----------							
		Sheltered	Exposed	Sheltered	Exposed	Sheltered	Exposed	Sheltered	Exposed
A	Urban	L	M	M	H	H	H	H	VH
	Open	M	H	H	VH	H	VH	VH	EH
W	Urban	M	H	H	VH	H	VH	EH	EH
	Open	H	VH	VH	EH	VH	EH	SD	SD

Projects in Lee Zones shall have their Wind Zones increased as follows:

Low wind becomes High,
Medium wind becomes Very High
High wind or above becomes Specific Design

Earthquake Zone

EQ Steps	Determine	Circle one of the following				Reference
1	Earthquake Zone	**1**	**2**	**3**	**4**	Figure 5.4, NZS 3604:2011
2	Site Subsoil classification	A or B	C	D	E	Territorial Authorities or SED
3	Floor Load	2 kPa	3 kPa			
4	Room in roof space	Yes	No			Building Plan
5	Annual Exceedance probability	1/500 yrs (factor 1.0)	1/1000 yrs (factor 1.3)	1/2500 yrs (factor 1.8)		

Wall Bracing Design Sheet Two

Manual Method

Please photocopy

Design Step Three: Calculate the Bracing Demand for Wind and Earthquake

Once the Project Specifications and Wind Zone and Earthquake Zone have been determined from Steps One and Two, refer to Wind and Earthquake tables in NZS 3604:2011. Section 5 (and Section 14 if floor load is 3kPa), to complete Design Sheet Two.

Wind Tables (refer NZS 3604:2011 Section 5)

Level	Table
Single or Upper Storey	5.6
Lower Storey	5.7
Sub Floor Structure	5.5

Earthquake Tables (refer NZS 3604:2011 Section 5)

Floor Load =	2kPa		3kPa	
Storeys =	Single	Double	Single	Double
Foundation Type	Table		Table	
Subfloor Framing	5.8	5.9	14.1	14.2
Slab on Ground	5.10	5.10	14.3	14.3

Single or Upper Level Wind Demand

Refer Table 5.6

Single or Upper Level Wind Along =		BUs/m
Single or Upper Level Wind Across =		BUs/m

WIND ALONG	BW		W ALONG		
Single or Upper Level		X		=	BUs
WIND ACROSS	BL		W ACROSS		
Single or Upper Level		X		=	BUs

Single Or Upper Level Earthquake Demand

If Subfloor refer Table 5.8 If Slab refer table 5.10

Single or Upper Level Earthquake (E) =		BUs/sqm

Note: For part storey in roof space add E + 4

EQ ALONG and EQ ACROSS:	GPA		E		
Single or Upper Level		X		=	BUs

Lower Level Wind Demand

Refer Table 5.7

Lower Level Wind Along =		BUs/m
Lower Level Wind Across =		BUs/m

WIND ALONG	BW		W ALONG		
Lower Level		X		=	BUs
WIND ACROSS	BL		W ACROSS		
Lower Level		X		=	BUs

Lower Level Earthquake Demand

If Subfloor refer Table 5.9 If Slab refer table 5.10

Lower Level Earthquake (E) =		BUs/sqm

Note: For part storey in roof space add E +4

EQ ALONG and EQ ACROSS:	GPA		E		
Lower Level		X		=	BUs

Sub Floor Level Wind Demand

Refer Table 5.5

Sub Floor Level Wind Along =		BUs/m
Sub Floor Level Wind Across =		BUs/m

WIND ALONG	BW		W ALONG		
Sub Floor Level		X		=	BUs
WIND ACROSS	BL		W ACROSS		
Sub Floor Level		X		=	BUs

Sub Floor Level Earthquake Demand

If Single Storey refer Table 5.8 If Double Storey refer table 5.9

Sub Floor Level Earthquake (E) =		BUs/sqm

Note: For part storey in roof space add E +4

EQ ALONG and EQ ACROSS:	GPA		E		
Sub Floor Level		X		=	BUs

Transfer Results to appropriate Solution Sheets overleaf

Design Step Four: **Distribute Bracing Lines and Bracing Elements as evenly as possible.**

Design Step Five: **Ensure Individual Bracing Line Totals exceed the Individual Bracing Line Demand.** **(See Sheet Overleaf)**

Design Step Six: **Ensure Total Bracing Achieved exceeds Bracing Demand for both Wind & Earthquake.**
(See Sheet Overleaf)

Wall Bracing Solution Sheet: Along

Manual Method

Please photocopy for each level

Project Name

Storey Level (Single, Upper, Lower or Sub-Floor)

Along

Wall Bracing Line							Wind		Earthquake	
1	2	3	4	5	6	7	W8	W9	E8	E9
Line Label	Bracing Element No.	Supplier	System Number	Element Length	Stud Height	Wall Angle	Rating BU/m	Achieved BUs	Rating BU/m	Achieved BUs
A										
		Minimum BUs Required for Line =					Line Sub-Total =			
B										
		Minimum BUs Required for Line =					Line Sub-Total =			
C										
		Minimum BUs Required for Line =					Line Sub-Total =			
D										
		Minimum BUs Required for Line =					Line Sub-Total =			
E										
		Minimum BUs Required for Line =					Line Sub-Total =			
F										
		Minimum BUs Required for Line =					Line Sub-Total =			
G										
		Minimum BUs Required for Line =					Line Sub-Total =			

	Wind	Earthquake
Along BUs Achieved =		
	OK?	OK?
From Sheet Two Along BUs Required =		

Wall Bracing Solution Sheet: Across

Manual Method

Please photocopy for each level

Project Name | Storey Level (Single, Upper, Lower or Sub-Floor)

Across

Wall Bracing Line							Wind		Earthquake	
1	2	3	4	5	6	7	W8	W9	E8	E9
Line Label	Bracing Element No.	Supplier	System Number	Element Length	Stud Height	Wall Angle	Rating BU/m	Achieved BUs	Rating BU/m	Achieved BUs
M										
	Minimum BUs Required for Line =						Line Sub-Total =			
N										
	Minimum BUs Required for Line =						Line Sub-Total =			
O										
	Minimum BUs Required for Line =						Line Sub-Total =			
P										
	Minimum BUs Required for Line =						Line Sub-Total =			
Q										
	Minimum BUs Required for Line =						Line Sub-Total =			
R										
	Minimum BUs Required for Line =						Line Sub-Total =			
S										
	Minimum BUs Required for Line =						Line Sub-Total =			

	Wind	Earthquake
Across BUs Achieved =		
	OK?	OK?
From Sheet Two Across BUs Required =		

Wall & Ceiling Construction Details

Wall Framing

Framing is to comply to NZS 3604:2011 and must be a minimum of 70 x 45mm for internal walls and 90 x 35mm for external walls. Nogs or dwangs are not a requirement in order to achieve the bracing ratings published in this document.

Fastening Bracing Elements to Floors

Quick-Brace™ System Number	Bottom Plate Fixing Requirements			Additional Requirements
	Concrete Floors		Timber Floors	Concrete or Timber
	External Walls	*Internal Walls*	*External or Internal Walls*	*External or Internal*
ES-N	Fix as per NZS 3604:2011	Fix as per NZS 3604:2011. Alternatively see **Note 1** below	Pairs of 100 x 3.75mm hand driven flat head nails or three 90 x 3.15mm power driven nails at 600mm centres all in accordance to NZS 3604:2011	None
ESSN	Not applicable			
ESSH	Not applicable	Fix as per NZS 3604:2011		Panel End Hold downs at each end of the bracing element.
EMSH				
ES-H	Fix as per NZS 3604:2011			
EM-H				
ESPH				
EMPH				

Note 1:

Min 75 x 3.8mm shot-fired fasteners with 16mm discs at 150mm & 300mm from end studs and thereafter at 600mm centres. Ensure a minimum penetration of 30mm into the concrete foundation.

Top Plate Connections

Top plate connections detailed on the right meet the requirements of NZS 3604:2011 clause 8.7.3 Joints in Plates. The joints must be over a stud or solid blocking.
A 6kN connection is required if any bracing element in the wall exceeds 100 bracing units. Otherwise a 3kN connection is adequate.

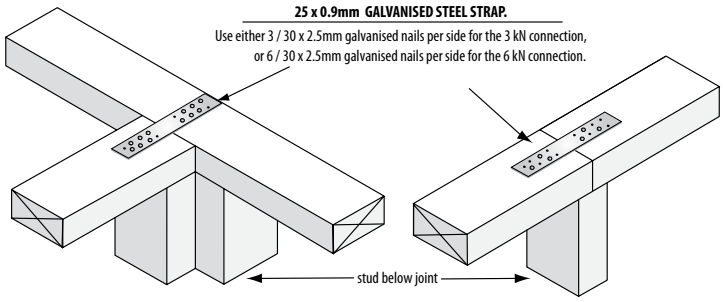

Panel End Hold down Details - Bracing Anchor Brackets

Either Pryda® Bracing Anchor or any other proprietary panel end hold down bracket with a minimum performance of 15kN.

Concrete Floors

M12 galvanised anchor bolt or proprietary equivalent with minimum characteristic strength of 15kN .
Set no less than 75mm into the concrete.

External

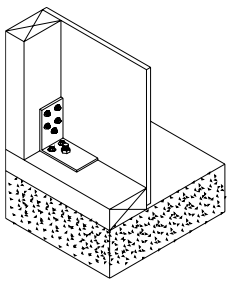

Locate the bracket flush with the inside face of the framing in order to maximise concrete edge distance.

Internal

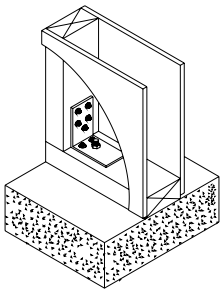

Locate the bracket centrally on the bottom plate.

Timber Floors

M12 x 150mm galvanised coach screw or proprietary equivalent with minimum characteristic strength of 12kN.

External

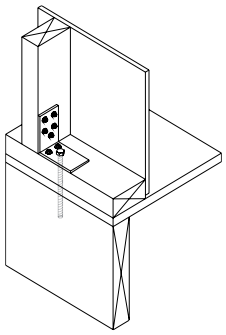

Locate the bracing anchor bracket so that the coach screw is centred over the timber below.

Internal

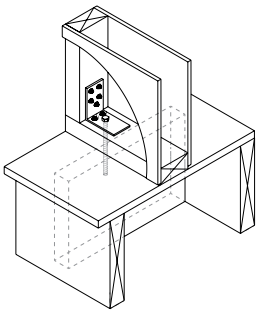

Full depth solid blocking centrally positioned beneath the coach screw.

Panel End Hold down Details - Bracing Strap & Bolt Detail

N.B. Bottom plate anchor placements have been reduced to 80mm from the end of the bracing element. This is to be consistent with the bolt location when using bracing anchor brackets and represents industry best practise. This does not affect previous designs or installations.

Bracing Strap:

400 x 25 x 0.9mm galvanised strap passing under the bottom plate. Six 30 x 2.5mm galvanised flat head nails to each side of the stud and three 30 x 2.5mm galvanised flat head nails to each side of the bottom plate.

The bracing strap should be checked into the framing in order to make the substrate flush when receiving the plasterboard lining. Position it in such a way that the important corner fastenings of the bracing element are not affected by it. Keeping the strap to the edge of the end stud as shown below will ensure the important corner fastenings won't penetrate the bracing strap.

Extra thickness and/or corrosion protection may be required on exposed and unexposed sites as per requirements of NZS 3604:2011

Concrete Floors

M12 x 150mm galvanised bolt or proprietary equivalent with minimum characteristic strength of 15kN. Set no less than 75mm into the concrete.

Allow for a 3 x 50 x 50mm galvanised washer within 105mm of the ends of the bracing element.

Internal

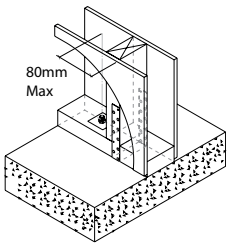

External

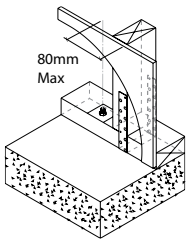

Timber Floors

M12 x 150mm galvanised coach screw or proprietary equivalent with minimum characteristic strength of 12kN.

Allow for a 3 x 50 x 50mm galvanised washer within 105mm of the ends of the bracing element.

Internal

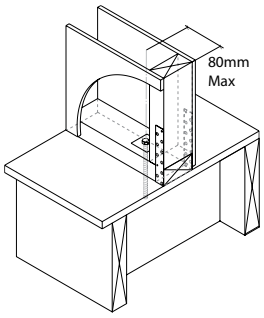

External (Option A)

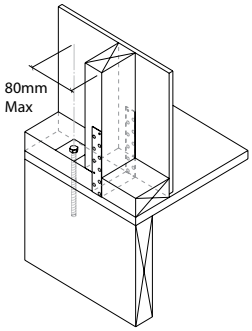

Timber Floor: External

(Option B)

Block up to the first nog to allow for double strapping using three 100 x 3.75mm nails. Two 300 x 25 x 0.9mm galvanised straps pass down onto the floor joist. Six 30 x 2.5mm galvanised flat head nails to each stud and the floor joist and three to the bottom plate.

External (Option B)

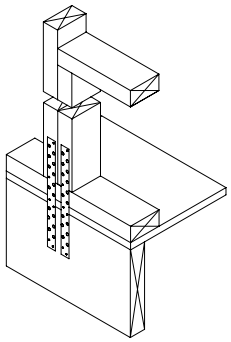

Intersecting Walls

Provided the minimum wall lengths are complied with and walls are constructed as described in this manual, bracing elements may be interrupted by intersecting walls as detailed below. Fasteners layout at the corners and around the perimeter of the bracing elements are as per The Fastener Layout figures on page 22. Joints between sheets shall be paper taped and stopped in accordance with the Elephant Plasterboard Installation Guide. Panel end hold-downs must also comply except that the location of bottom plate anchors is modified for L and T intersections as defined below.

The minimum bracing element length is 900mm for single sided bracing systems (ES-N, ES-H and EM-H) and 600mm for double sided bracing systems, (ESSN, ESSH, ESPH, EMSH and EMPH.)

(A) T INTERSECTION

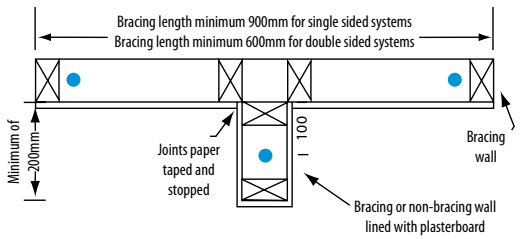

(B) L INTERSECTION

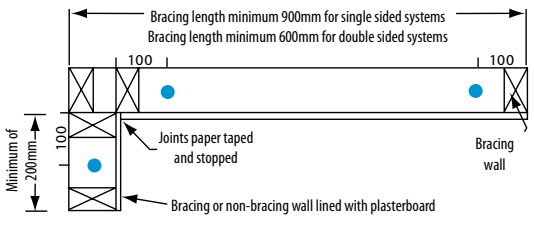

● Bottom plate fixing as required for bracing element or NZS 3604:2011 (as appropriate)

Parapets, Gable End Walls or Dropped or Suspended Ceilings

Sheeting material used in bracing elements must connect to both the top and bottom plates. Where the top plate is not accessible, fixing to a row of nogs is not an acceptable solution. Detail below are two possible solutions.

A continuous length of timber or ribbon plate, with the same minimum size as the bottom plate, fixed across the face of the studs just above the row of nogs and at the ceiling line.

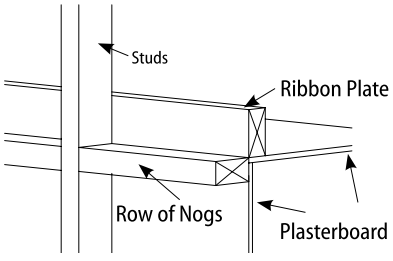

A metal angle of minimum of 50 x 50 x 0.55mm fixed to the row of nogs at the ceiling line. Use minimum 30 x 2.5mm FH galv nails at 300mm centres.

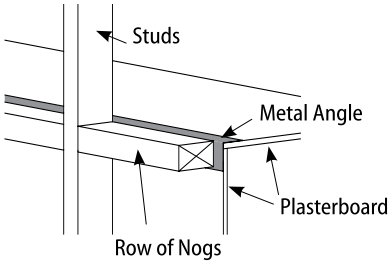

Ceiling Diaphragms

Ceiling diaphragms are required to comply with Section 5.6 and 13.5 of NZS 3604:2011. Ceiling diaphragms are required when distances between bracing lines exceed 6m (when Dragon ties not used) or 7.5m if Dragon ties are used as per figure 8.1 in NZS 3604:2011.

Ceiling diaphragms shall not exceed 12m in length and the length shall not exceed twice the width (both length and width being measured between supporting walls). The ceiling lining shall cover the entire area of the ceiling diaphragm.

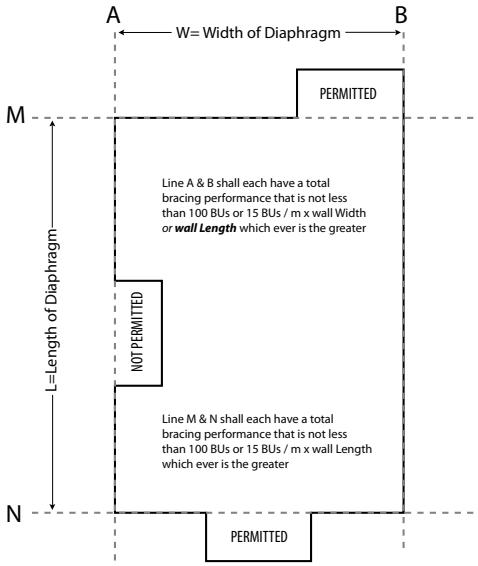

Limitations for Ceiling Diaphragm Systems

Ceiling diaphragm requirements are dependent on the length of the room and/or the roof pitch.

C1: Not steeper than 15 degrees and not longer than 7.5m

C2: Not steeper than 25 degrees and not longer than 12m
or Not steeper than 45 degrees and not longer than 7.5m

Plasterboard Lining Requirement:

Minimum 10mm Elephant Standard-Plus Plasterboard

Framing Members:

Ceiling battens shall be spaced at maximum;

- 600mm centres for 10mm Elephant Standard-Plus or 13mm Elephant Standard-Plus Plasterboard.

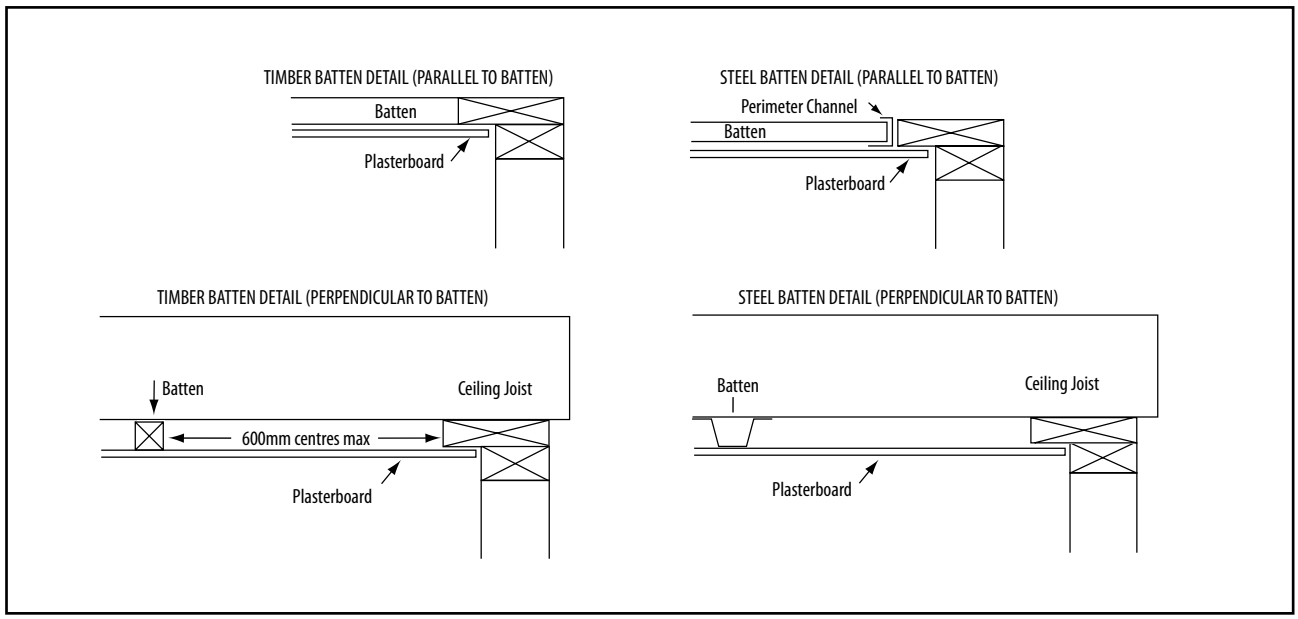

Timber or Steel Battens

Timber battens: Must be fixed according to NZS 3604:2011.

Steel battens: Minimum 0.55 BMT thickness with flanges not less than 8mm in order to allow the direct screwing, using 2/32mm x 8g wafer head self tapping screws, to the ceiling framing members. If a clip system is used then a solid timber block or continuous timber member must be fixed to the framing member.

A steel perimeter channel or metal angle is required to receive the ends of the steel battens.

The linings must be fastened to solid continuous timber member at the perimeter of the ceiling diaphragms. This is achieved with either at 140mm double top plate or by fixing continuous timber member to the original top plate using fixing requirements for built up members and nailed together according to NZS 3604:2011 clause 2.4.4.7

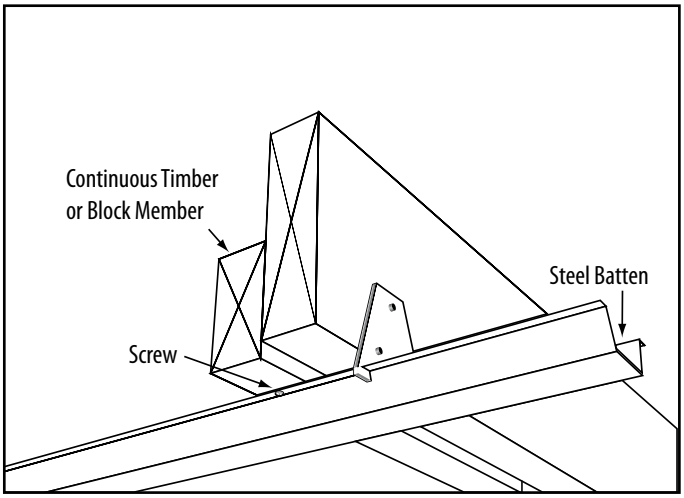

Ceiling Diaphragms continued ....

Coved Ceilings

Ceilings diaphragms with more than one gradient are allowable, by using metal folded angles with a minimum gauge of 0.55 BMT at the junctions.
Use 32mm x 6g course thread drywall screws when fixing to timber battens and use 32mm x 8g drywall self tapping screws or similar when fixing to metal battens.
The plasterboard is fixed to these folded metal angles at 75mm or 100mm or 150mm centres depending on conditions detailed below.
Use 25mm x 6g drywall self tapping screws.

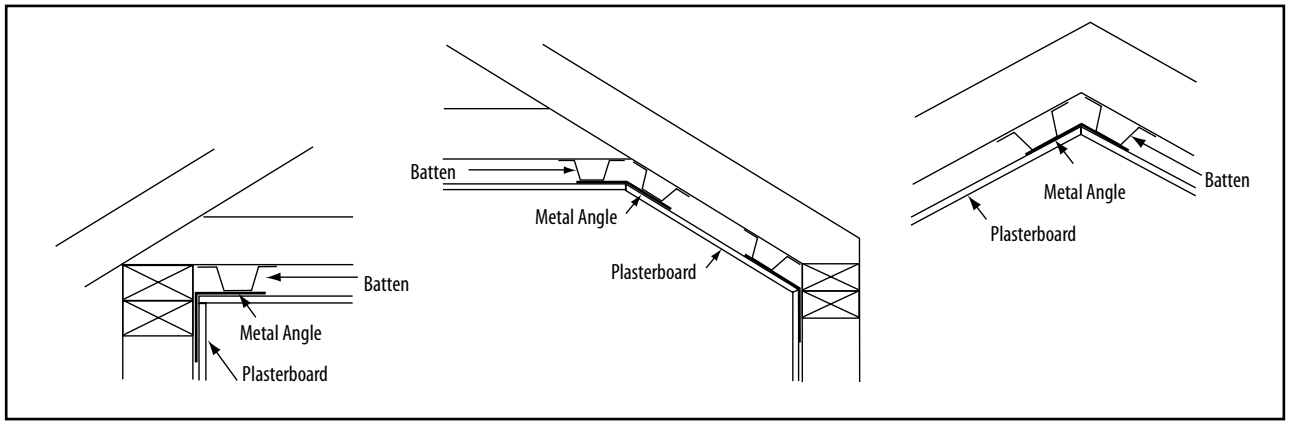

Minimum sheet size requirements:

Minimum sheet size shall be 900mm wide by 1800mm long where possible except where building dimensions prevent their use.
Sheets between 600mm wide and 900mm wide by between 1200mm long and 1800mm long can be used provided they are back blocked with adjacent sheets.

Openings in Ceiling Diaphragms:

Openings are allowable and must be within the middle third of the diaphragms length and width and no opening dimension shall be greater than the ceiling diaphragm width. Fix sheets at 150mm centres minimum to opening trimmers. Refer to Openings in Bracing Elements on page 22.

Fasteners:

Timber battens & Timber perimeters: 32mm x 6g High thread Drywall screws
Steel battens and Steel perimeter: 25mm x 6g Self Tapping Drywall screws

Fastener Brands Allowable

Fortress® ,Grabber® or Senco ®.
(Other fastener brands need to demonstrate equal or better performance).

Fastening Centres:

The corner pattern fastening centres are as follows;
For ceiling diaphragms not steeper than 15 degrees and not longer than 7.5m
Place fasteners 50mm, 50mm, 50mm, 75mm, 75mm from all corners of the diaphragm**.**
Then place fasteners at maximum 150mm centres to the boundary members and around the perimeter of the diaphragm as per ceiling diaphragm pattern **C1** on the right.

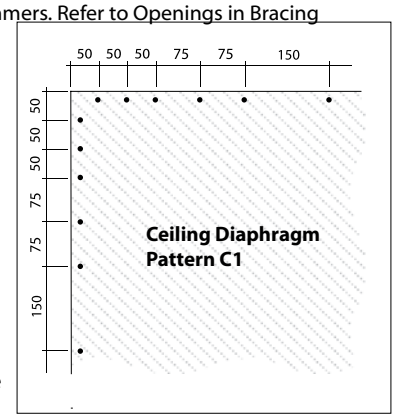

For ceiling diaphragms that are:
either not steeper than 25 degrees and not longer than 12.0m
or not steeper than 45 degrees and not longer than 7.5m
Place fasteners 50mm, 50mm, 50mm, 75mm, 75mm from all corners of the diaphragm**.**
Then place fasteners at maximum 100mm centres to the boundary members and around the perimeter of the diaphragm as per ceiling diaphragm pattern **C2** on the right.

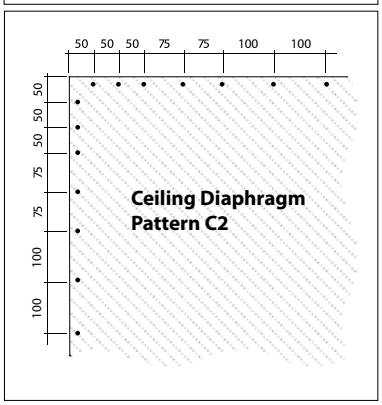

Fix all fasteners at no less than 12mm from paper bound sheet edges and 18mm from sheet ends or cut edges.
Fastening requirements within the ceiling diaphragm are conventional. All in accordance with the Elephant Plasterboard Installation Guide.

Jointing:

All joints shall be paper tape reinforced and stopped. Sheet end butt joints should be between the battens and back blocked.
All in accordance with the Elephant Plasterboard Installation Guide.

Wall Bracing Construction Details

Fastening the Plasterboard Linings

Elephant Plasterboard designated as a bracing element must be constructed with specified fasteners and fastener patterns. Specialised panel end hold downs may also be required as they are essential for obtaining the bracing unit ratings. The corner detail for plasterboard bracing elements require specific increased fastening. See figures below.

Fasteners:

Timber battens & Timber perimeters: 32mm x 6g High thread Drywall screws
Steel battens and Steel perimeter: 25mm x 6g self tapping screws

Fastener Brands Allowable

Fortress® , Grabber® or Senco ®.(Other fastener brands need to demonstrate equal or better performance).

Fastener Layout

Refer Condensed Bracing Corner Pattern on the right. Place all fasteners 12mm from paper bound sheet edges and 18mm from sheet ends or cut edges. Fastening the middle of the bracing element is as per the recommended screw and glue methods. Refer to Elephant Plasterboard Installation Guide.

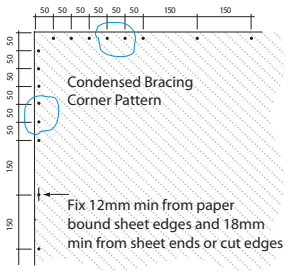

Minimum Sheet Size

Sheets less than 300mm wide are allowable provided that the joints form over solid framing or the sheet is back blocked. All joints must be paper taped and stopped.

Butt Joints

All butt joints should be either fitted over nogs or studs and fastened at 200mm centres or back-blocked. All joints must be paper taped and stopped. Refer to Elephant Plasterboard Installation Guide.

Horizontal Fixing

QuickBrace™ systems may be fixed horizontally. The specialised corner and perimeter bracing pattern need only to be placed over the length and width of the bracing element. Fastening in the field of the bracing element is as per the recommended glue and screw method. Note- Care should be taken during the installation of the plasterboard, as often the studs that require the special mechanical fixing pattern are in the field of the sheet. It is important to insure that the adhesives are not placed on or near the studs that require these special perimeter fasteners as this can be a cause of screw popping.

Alternative Corner Fastener Layout

If the installer has used the 50, 50, 50, 75, 75, 150 corner screw pattern then this can easily be remedied by simply placing an extra screw between the first 150mm (where possible).
Refer to the Alternative Condensed Bracing Corner Pattern on the right.

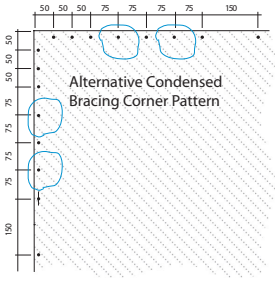

Wet Areas

Do not place bracing elements in areas such as behind showers and baths. Placing bracing elements in water splash areas is acceptable provided that these areas are maintained impervious for the life of the building. Bracing elements require a 50 year durability.

Shaded area must not have Plasterboard Bracing Systems

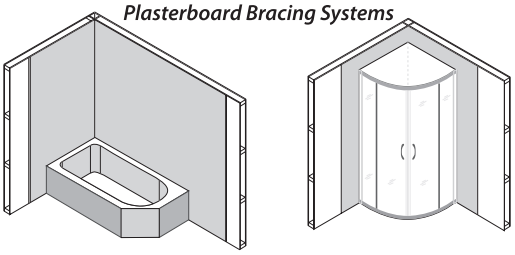

Allowable Substitutions

Elephant Aquaboard can be substituted for the Elephant Standard-Plus in QuickBrace™ systems ES-N, ESSN, ES-H, ESSH, ESPH and EMSH.
Elephant Aquaboard can be substituted for the Elephant Multiboard in Quick-Brace™ systems EM-H, EMSH and EMPH provided that the element is 600mm or longer and the perimeter screw pattern is reduced to 100mmm centres.
Ensure that all other relevant bracing system requirements including the important corner patterns are met.

Openings in Bracing Elements

Large openings can only be placed in the middle 1/3 of the bracing element. Neither the opening height nor length can be more than 1/3 of the bracing element height. Fix the wall linings around the opening trimmers at 150mm centres. Smaller openings of 90 x 90mm or less are allowable but cannot be placed closer than 90mm from the edge of the bracing element.

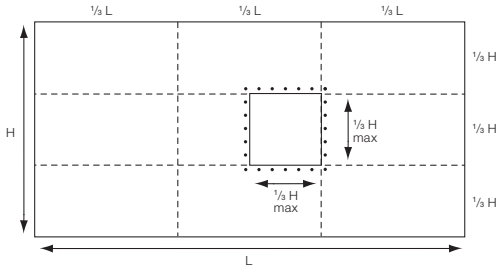

Plywood

For systems ESPH and EMPH plywood is required. This can be Grade D-D 7mm construction plywood at a minimum. The plywood must be manufactured as per Australian/New Zealand Standard AS/NZS 2269:2004. The nailing pattern is at 150mm centres around the perimeter of the bracing element or each plywood sheet, whichever is the lesser width, using 50 x 2.8mm Flat head galvanised or stainless steel nails.
Sheet edges must be supported by framing or blocking. The corner pattern fastening is conventional and there is no need for the specialised corner patterns as is required on the plasterboard side of the brace.

PLASTERBOARD ON ONE SIDE

System Number	Lining Requirement	Min Length (m)	BU/m		Panel Hold-downs	Bracing Corner Pattern
			Wind	Earth-quake		
ES-N	Elephant Standard-Plus on one side	0.4	65	60	No	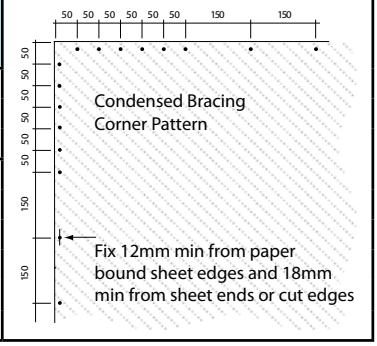
		1.2	70	65		
		1.8	80	65		
ES-H	Elephant Standard-Plus on one side	0.4	80	75	Yes	
		0.8	100	85		
		1.8	115	85		
EM-H	Elephant Multiboard on one side	0.4	95	100		
		0.8	120	110		
		1.2	140	115		

FRAMING

Framing heights and dimensions to comply with NZS 3604:2011 and must be a minimum of 70 x 45mm for internal walls and 90 x 35mm for external walls. Nogs and Dwangs are not a requirement in order to achieve the bracing ratings in this document.
Refer to relevant sections and clauses of
NZBC B1: Structure; AS1 Clause 3 Timber -NZS 3604
NZBC B2: Durability; AS1 Clause 3.2 Timber -NZS 3602

FASTENING BRACING ELEMENTS TO FLOOR

Timber Floor:

Fastening within the bracing element must be done in accordance with NZS 3604:2011.
i.e. Either pairs of 100 x 3.75mm hand driven nails or three 90 x 3.15mm power driven nails at 600mm centres.
For **ES-H** and **EM-H:** Use the panel hold downs at each end of the bracing element.

Concrete Floors:

External or Internal walls: Within the bracing element fix the bottom plate as per NZS 3604:2011.
For **ES-N:** On Internal Walls alternatively use 75 x 3.8mm shot-fired fasteners with 16mm discs at 150mm & 300mm from end studs and thereafter at 600mm centres. Ensure a minimum penetration of 30mm into the concrete foundation.
For **ES-H** and **EM-H**: Use the panel hold downs at each end of the bracing element.

WALL LINING (As per Specified System Above)

One layer of Plasterboard lining type as per specified system above to ONE side of frame.
The Plasterboard sheets can be fixed vertically or horizontally. Use full height or full length sheets when fixing vertically or horizontally where possible. All sheet end butt joints must be fixed over solid timber framing and fastened at 200mm centres. Alternatively the sheet end butt joints may be back blocked. Sheets shall be touch fitted.

Horizontal Fixing

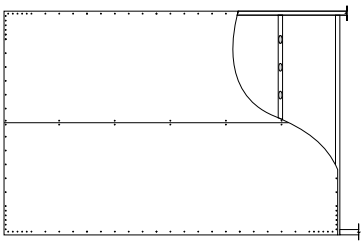

Vertical Fixing

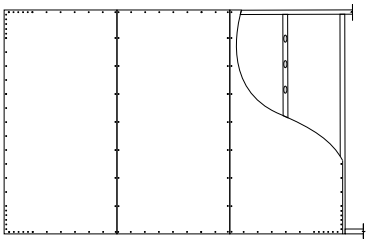

FIXING OF PLASTERBOARD LININGS

Fastening: (Corners and Perimeters of the bracing element)
32mm x 6g High thread Drywall screws (Fortress® or Grabber® or Senco®)

Fastening Centres: (Corners and Perimeters of the bracing element)
Corner Pattern: Refer to the bracing corner pattern above.
(See Page 22 for alternative allowable corner pattern.)
Perimeter Pattern: Place fasteners at 150mm centres around perimeter of bracing element.
Place all fasteners 12mm from paper bound sheet edges and 18mm from sheet ends or cut edges.

Fasteners and Fastening Centres in the Field of the bracing element
For vertically fixed sheets place fasteners at 300mm centres to the intermediate sheet joints. For Horizontally fixed sheets place fasteners at the sheet edge that crosses the studs. Place daubs of Drywall adhesives at 300mm centres to intermediate studs. Take extra care to ensure that screws or clouts are not placed closer than 200mm from any daubs of adhesive.

JOINTING

All fasteners stopped and all sheet joints reinforced with paper jointing tape.
All in accordance with the Elephant Plasterboard Installation Guide.

PLASTERBOARD ON BOTH SIDES

System Number	Lining Requirement	Min Length (m)	BU/m		Panel Hold-downs	Bracing Corner Pattern
			Wind	Earth-quake		
ESSN	Elephant Standard-Plus on Both sides	0.4	80	75	No	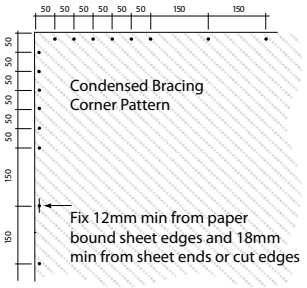
		0.8	90	80		
		1.2	95	85		
ESSH	Elephant Standard-Plus on Both sides	0.4	95	110	Yes	
		0.8	140	130		
		1.2	150	140		
EMSH	Elephant Multiboard on one side, Elephant Standard plus on the other	0.4	110	115		
		0.8	140	135		
		1.2	150	145		

FRAMING

Framing heights and dimensions to comply with NZS 3604:2011 and must be a minimum of 70 x 45mm for internal walls and 90 x 35mm for external walls. Nogs and Dwangs are not a requirement in order to achieve the bracing ratings in this document.
Refer to relevant sections and clauses of
NZBC B1: Structure; AS1 Clause 3 Timber -NZS 3604
NZBC B2: Durability; AS1 Clause 3.2 Timber -NZS 3602

FASTENING BRACING ELEMENTS TO FLOOR

Timber Floor:

Fastening within the bracing element must be done in accordance with NZS 3604:2011.
i.e. Either pairs of 100 x 3.75mm hand driven nails Or three 90 x 3.15mm power driven nails at 600mm centres.
For **ESSH** and **EMSH:** Use the panel hold downs at each end of the bracing element.

Concrete Floors:

Within the bracing element fix the bottom plate as per NZS 3604:2011.
For **ESSN**: For Internal Walls alternatively use 75 x 3.8mm shot-fired fasteners with 16mm discs at 150mm & 300mm from end studs and thereafter at 600mm centres. Ensure a minimum penetration of 30mm into the concrete foundation.
For **ESSH** and **EMSH**: Use the panel hold downs at each end of the bracing element.

WALL LINING (As per Specified System Above)

One layer of Plasterboard lining type as per specified system above to BOTH sides of frame. The Plasterboard sheets can be fixed vertically or horizontally. Use full height or full length sheets when fixing vertically or horizontally where possible. All sheet end butt joints must be fixed over solid timber framing and fastened at 200mm centres. Alternatively the sheet end butt joints may be back blocked. Sheets shall be touch fitted.

Horizontal Fixing

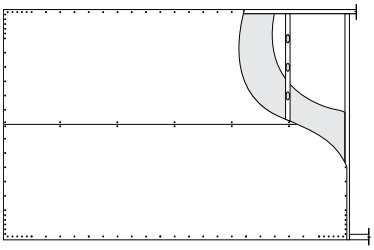

Vertical Fixing

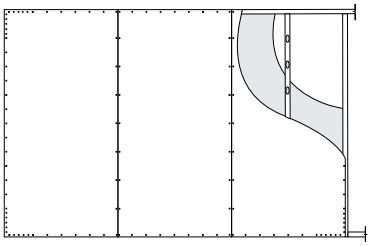

FIXING OF PLASTERBOARD LININGS

Fastening: (Corners and Perimeters of the bracing element)
32mm x 6g High thread Drywall screws (Fortress® or Grabber® or Senco®)

Fastening Centres: (Corners and Perimeters of the bracing element)
Corner Pattern: Refer to the bracing corner pattern above.
(See Page 22 for alternative allowable corner pattern).
Perimeter Pattern: Place fasteners at 150mm centres around perimeter of bracing element. Place all fasteners 12mm from paper bound sheet edges and 18mm from sheet ends or cut edges.

Fasteners and Fastening Centres in the Field of the bracing element
For vertically fixed sheets place fasteners at 300mm centres to the intermediate sheet joints. For Horizontally fixed sheets place fasteners at the sheet edge that crosses the studs. Place daubs of Drywall adhesives at 300mm centres to intermediate studs. Take extra care to ensure that screws or clouts are not placed closer than 200mm from any daubs of adhesive.

JOINTING

All fasteners stopped and all sheet joints reinforced with paper jointing tape.
All in accordance with the Elephant Plasterboard Installation Guide.

PLASTERBOARD ON ONE SIDE, PLYWOOD THE OTHER

System Number	Lining Requirement	Min Length (m)	BU/m		Panel Hold-downs	Bracing Corner Pattern
			Wind	Earth-quake		
ESPH	Elephant Standard-Plus on One Side Plywood on the Other Side	0.4	100	115	Yes	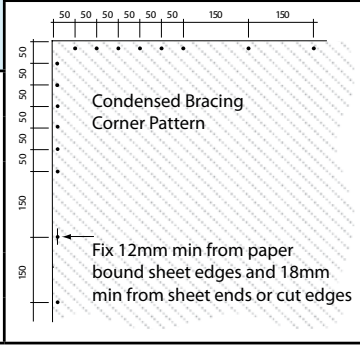
		0.8	140	140		
		1.2	150	150		
EMPH	Elephant Multiboard on One Side Plywood on the Other Side	0.4	120	135		
		0.8	140	145		
		1.2	150	150		

FRAMING

Framing heights and dimensions to comply with NZS 3604:2011 and must be a minimum of 70 x 45mm for internal walls and 90 x 35 mm for external walls. Nogs and Dwangs are not a requirement in order to achieve the bracing ratings in this document.
Refer to relevant sections and clauses of
NZBC B1: Structure; AS1 Clause 3 Timber -NZS 3604
NZBC B2: Durability; AS1 Clause 3.2 Timber -NZS 3602

FASTENING BRACING ELEMENTS TO FLOOR

Timber Floor:

Fastening within the bracing element must be done in accordance with NZS 3604:2011.
i.e. Either pairs of 100 x 3.75mm hand driven nails or three 90 x 3.15 power driven nails at 600mm centres.
For **ESPH** and **EMPH:** Use the panel hold downs at each end of the bracing element.

Concrete Floors:

Within the bracing element fix the bottom plate as per NZS 3604:2011.
For **ESPH** and **EMPH:** Use the panel hold downs at each end of the bracing element

WALL LINING (As per Specified System Above)

One layer of Plasterboard lining type as per specified system above to ONE side of frame.
One layer of 7mm D-D Plywood as per specified system above to OTHER side of frame.
The Plasterboard sheets can be fixed vertically or horizontally. Use full height or full length sheets when fixing vertically or horizontally where possible. All sheet end butt joints must be fixed over solid timber framing and fastened at 200mm centres.
Alternatively the sheet end butt joints may be back blocked.
Plywood sheets must be fixed vertically with edges supported by framing or blocking. Sheets shall be touch fitted.

Horizontal Fixing

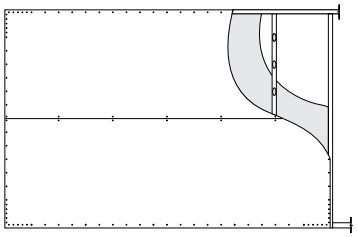

Plasterboard side shown

FIXING OF PLASTERBOARD LININGS

Fasteners: (Corners and Perimeters of the bracing element)
32mm x 6g High thread Drywall screws (Fortress® or Grabber® or Senco®)

Fastening Centres: (Corners and Perimeters of the bracing element)
Corner Pattern: Refer to the bracing corner pattern above.
(See Page 22 for alternative allowable corner pattern).
Perimeter Pattern: Place fasteners at 150mm centres around perimeter of bracing element.
Place all fasteners 12mm from paper bound sheet edges and 18mm from sheet ends or cut edges.

Vertical Fixing

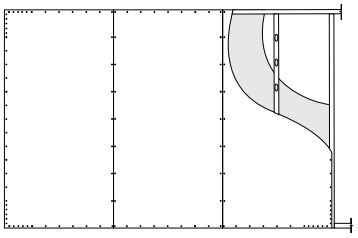

Fasteners and Fastening Centres in the Field of the bracing element
For vertically fixed sheets place fasteners at 300mm centres to the intermediate sheet joints. For horizontally fixed sheets place fasteners at the sheet edge that crosses the studs. Place daubs of Drywall adhesives at 300mm centres to intermediate studs. Take extra care to ensure that screws or clouts are not placed closer than 200mm from any daubs of adhesive.

FIXING OF PLYWOOD LININGS

Fasteners: (Corners and Perimeters of the bracing element
50 x 2.8mm Flat head Galvanized or Stainless Steel Nails.
Fix at 150mm centres around perimeter of the bracing element and the perimeter of each sheet.
Fix at 300mm centres to intermediate studs that are not at the end of a bracing element.
The corner pattern fastening is conventional and there is no need for the specialized corner pattern as is required on the plasterboard side of the brace.

JOINTING

All fasteners stopped and all sheet joints reinforced with paper jointing tape.
All in accordance with the Elephant Plasterboard Installation Guide.

Notes:

Product Range

TE/TE = Tapered Both Edges
TE/SE = Tapered One Edge, Square the Other

Product Weights and available Lengths

PRODUCT	THICK-NESS	EDGE TYPE	WIDTH	WEIGHT	LENGTH							
	mm		mm	Kg per m²	2.4m	2.7m	3.0m	3.3m	3.6m	4.2m	4.8m	6.0m
Standard-Plus	10	TE/TE	1200	7.4	✓	✓	✓	✓	✓	✓	✓	✓
Standard-Plus	13	TE/TE	1200	9.2	✓	✓	✓	✓	✓	✓	✓	✓
Horizontal Standard-Plus	10	TE/SE	1200	7.4	✓		✓		✓	✓	✓	✓
Wide Horizontal Standard-Plus	10	TE/SE	1350	7.4					✓		✓	✓
Multiboard	10	TE/TE	1200	9.0	✓	✓	✓		✓			
Multiboard	13	TE/TE	1200	12.0	✓	✓	✓		✓			
Multiboard	16	TE/TE	1200	13.8	✓	✓	✓					
Aquaboard	10	TE/TE	1200	8.5	✓	✓	✓		✓			
Aquaboard	13	TE/TE	1200	11.5	✓	✓	✓		✓			

Product Primary Functions

PRODUCT	THICK-NESS	EDGE TYPE	WIDTH	Primary Functions							
	mm		mm	Superior Finish	Horizontal Fixing	Span 600* Centres on Ceilings	Bracing	Fire Resistant	Noise Control	Impact Resistant	Water Resistant
Standard-Plus	10	TE/TE	1200	•		•	•	•			
Standard-Plus	13	TE/TE	1200	•		•	•	•			
Horizontal Standard-Plus	10	TE/SE	1200	•	•		•	•			
Wide Horizontal Standard-Plus	10	TE/SE	1350	•	•		•	•			
Multiboard	10	TE/TE	1200	•		•	•	•	•		
Multiboard	13	TE/TE	1200	•		•	•	•	•	•	
Multiboard	16	TE/TE	1200	•		•		•	•	•	
Aquaboard	10	TE/TE	1200	•			•	•	•		•
Aquaboard	13	TE/TE	1200	•		•	•	•	•	•	•

* In areas with significant temperature or humidity variations e.g. bathrooms, it is recommended to place battens at max 450mm centres when using 10mm Standard-Plus or 10mm Aquaboard

WDC APPROVED

Proposed Residence for
Mr Steve & Mrs Gay Robertson
10 Leicester Place, Springvale, Wanganui

Builder:

Reuters Construction Ltd
Trading as Devon Homes
165A Great North Road, Wanganui

T. 06-345-2393
F. 06-345-2165

PRELIMINARY AND GENERAL

1. *SCOPE*

This specification conforming to the attached Agreement and Conditions of Contract describes the work to be done and the materials to be used in the construction of the house shown on the attached drawings.

2. *BUILDING CONSENT/S:-*

The Owner or Owner's agent shall apply to the Territorial Authority (TA) for a BUILDING CONSENT, for inspections by the TA during construction and pay all bonds and fees incurred.

3. *ACCEPTABLE SOLUTIONS:*

All work shall be equal to (or better than) 'Acceptable Solutions' given in NZBC Approved Documents; complying with the Building Act 2004 and Building Regulations.

4. *HEALTH AND SAFETY:*

As directed by the Owner, the Contractor shall be responsible in complying with the Health and Safety in Employment Act 1992, effectively operating a Safety Management Programme for the duration of the contract.

5. *INSURANCES:*

The Contractor shall take out Builders All Risk Policy.

6. *INTERPRETATION:*

Work or materials shown on the drawings but not specified (or specified and not shown) shall be supplied as though both shown and specified. Materials shown but not specified must be of the kinds commonly employed for the service they are intended to perform. All figured dimensions shall be taken in preference to scale. The Contractor shall be held responsible for setting out of work and he shall make good at his own expense any errors that occur through his lack of checking or faulty workmanship. Unless written as provide only or fix only, the words 'provide' and 'fix' shall mean 'provide and fix'.

"This document is a general specification and is to be read in conjunction with the Plans and the Building Contract. Where there is any contradiction between the Building Contract, the Plans and Specifications, then the Building Contract shall take first precedence, the Plans second precedence, the Specification Schedule third precedence and the General Specification fourth precedence."

7. STABILITY DURING CONSTRUCTION:

The Contractor shall carefully brace and support all parts of his work against damage by wind and protect work from the elements as necessary during construction.

8. PROTECTION OF PROPERTY:

The Contractor shall protect adjoining properties during the contract and shall make good all damage at his own expense.

9. DAMAGE:

The Contractor shall make good at his own expense and to the satisfaction of controlling authorities, any damage done to footpaths, kerbs, drainage, etc, or other property under control of such authorities.
Each trade shall take care to prevent damage or disfigurement of the work of other trades and will be responsible for cost of restoring it.

10. MATERIALS:

Any materials specified that are not procurable when required, thus slowing progress of the Contract, may be substituted with other similar materials, providing that the substitute materials conform to the NZBC and the Owner gives permission. The Contractor is first to notify the Owner of any change proposed and at the completion of the Contract adjust any difference in cost.

11. WORKMANSHIP:

All work shall be carried out in accordance with the best trade practice, in strict conformity with the drawings and specification to the satisfaction of the Owner. All defective or damaged work shall be removed and made good to the satisfaction of the Owner.

12. CLEANING:

The Contractor, at the conclusion of the Contract, shall have all ceilings, walls and woodwork carefully dusted and wiped down, windows washed and glass free from scratches, floors brushed and wiped down and the entire building left in a perfectly clean condition for occupation.

EXCAVATION

1. GENERAL:

In accordance with Preliminary and General clauses applying to this section and:

- Means of compliance to relevant NZBC requirements.
- Excavation code of Practice, Occupational Health and Safety Department.
- Regional/Territorial Authority requirements for silt control from excavations.

2. SETTING OUT:

Set out the work as shown or implied on the drawings. Check accuracy in terms of position, levels and square.

3. HARDFILL:

Use only approved fill well-compacted under concrete ground floors and as otherwise specified.

4. DRAINAGE TRENCHES:

Take out seepage and drainage trenches where indicated to adequate depth and falls to prevent dampness under the building. Provide *Nova* drains or similar bedded on scoria where required.

CONCRETE AND REINFORCING

1. GENERAL:

Accord with Preliminary & General clauses applying to this section and means on compliance to relevant NZBC requirements.

2. EXTENT OF WORK:

Comprises the setting out, boxing and placing of concrete in the foundations, floor slabs, walls, beams and bands and any other concrete work shown in the drawings.

3. MATERIALS:

Ordinary grade concrete shall comply with NZS 3109.
Concrete from an Approved Batching plant only shall be used.

Minimum concrete strength at 28 days shall be:

a) 10 MPa for un-reinforced concrete used in mass foundations.
b) 17.5 MPa for un-reinforced concrete applications for reinforced concrete either not exposed to weather or exposed to the weather in zone B as shown in figure 4.1 NZS 3604:2011.
c) 20 MPa for reinforced concrete exposed to the weather at least 500m from mean high tide mark in Zone C as shown in figure 4.1 NZS 3604:2011.
d) 25 MPa for reinforced concrete exposed to weather and within 500m of the mean high tide mark.

4. FORMWORK:

Formwork shall be so constructed that the concrete thickness and shapes required are obtained as detailed without removal causing damage. Methods of construction and pouring and curing of concrete and times of removal of Formwork shall be as set down in NZS 3109.

5. CONCRETE FOUNDATION & FLOOR SLAB:

Foundation footings and reinforcing shall be to the sizes shown on drawings in accordance with relevant clauses of NZS 3604:2011, supporting single storey, 2 or 3 storey as appropriate. Such walls shall finish not less than 225mm above finished ground level but not measure more than 2m above the bottom of the footings.

6. PATHS:

Where shown on drawings, paths shall be laid not less than 75mm thick reinforced with 668 mesh or similar. The surface shall be graded evenly to provide suitable drainage and left with a uniform finish using a wooden float.

7. OTHER REQUIREMENTS:

Paving as detailed on drawings.

8. COMPLETION:

Make good any defective work. Leave all clean and stain free.

CARPENTRY AND JOINERY

1. GENERAL:

Accord with Preliminary & General clauses applying to this section and means of compliance to relevant NZBC requirements.

2. EXTENT OF WORK:

The work of this section shall include all labour, materials, equipment necessary to carry out and complete the carpentry as shown, or as further required by this specification. Any work that is intended or implied but not specifically shown but necessary for the proper completion of the building shall be included.

3. ATTENDANCE AND PROTECTION:

Arrange and attend upon all works by other trades in a logical sequence e.g. as in this section to allow early closing-in. Provide all blocking, fixings, trims, nogging as necessary for the full completion of their respective works and make good after all trades. Provide for temporary protection from adverse weather and damage and ensure closing in of the building as soon as possible.

4. MATERIALS AND WORKMANSHIP:

All timber and wood based products shall conform to NZS 3602 requirements, "Code of practice for specifying timber and wood-based products for use in building". Timbers shown in the Schedule of Timbers to be treated with an approved preservative process in plants licensed by the Timber Preservation Council. Any materials which in the opinion of the Owner, Loan Body or Territorial Authority are not up to standard, to be removed immediately from the site. All work shall be carried out in accordance with best trade practice.

5. COMPLIANCE WITH THIS SPECIFICATION:

a) Do any works under specific design in accord with details provided. The Contractor and Carpenter shall do all other work in accord with NZS 3604-2011. In particular complying with the whole of SECTION 2 - GENERAL of NZS 3604-2011. The treatment requirements are:
   - Roof framing, trusses and ceiling joists: untreated *klin dried* radiata pine
   - All wall framing: H1.2
   - Enclosed framing with flat roofs: H3.1

b) All fixings of materials to be in accordance with NZS 3604:2011, Section 4.4. Including sheet lining and cladding materials for walls and ceilings that are not wood-based, e.g.: *Gibraltar* board, fibrous plaster or wood cellulose sheeting; especially when used as diaphragms and for wall bracing.

6. GENERAL FRAMING:

All framing to be 100mm x 50mm stud or 75mm x 50mm stud with 50mm wide studs to all openings not exceeding 3m span where supporting only one storey. Top and bottom plates to be same size as studs in long lengths, halved or nail plated at wall junctions and jointed over studs. All studs at 600mm c.c. Provide two (2) rows of dwangs to full height each wall unless otherwise stated on drawings to full height each wall unless otherwise stated on drawings. Alternative kiln-dried ("dry frame").

7. WALL BRACING:

Provide all walls bracing as shown on drawings and wall bracing calculation sheets as is intended to satisfy the Territorial Building Authority. Keep strictly to the "Type", Lengths and Locations shown on plan and elevations.

8. POST AND BEAMS:

Where within maximum permitted by NZS 3604-2011, Section 9, secure in equivalent manner.

9. EXTERIOR JOINERY:

All windows shall be to NZS 4211.

Aluminium joinery complete with glazing, frictional restraints and catches, fix plumb both ways and in correct alignment and flash all in accord with manufacturer's instructions. All glazing to be in accordance with NZS 4223.

10. DAMP PROOFING:

All timber to be protected from dampness with 3-ply bituminous felt or other approved damp proofing material when in contact with concrete or brickwork, or as in clause 7.5 of NZS 3604:2011.

11. ROOF CONSTRUCTION: (See Drawings and Schedule of Timbers for types)

TRUSSED ROOFS: Drawings showing clearly the type, pitch, span, spacing and overhangs of roof trusses and details of roof cladding shall be provided to the truss manufacturer to allow him to comply with clause 10.2.2 of NZS 3604:2011. Thereafter, the Contractor shall match construction with the drawings and details provided by the truss manufacturer throughout all stages of fixing and bracing. The Contractor shall especially accord with the manufacturer's instructions for tying down where overhangs exceed 750mm. In all cases anchorage of all trusses to plates shall be with not less than 2/100mm skew nails plus 2/4.9mm wire dogs.

ROOF FRAMING: Supply and fix Hibeam rafters as shown on the plans. Fixing to be in accord with NZS3604:2011 and manufacturers specifications.

12. PURLINS, EAVES, GABLE ENDS:

Size of framing, spacing, overhangs and sheathing type as shown on plan.

13. FASCIA BOARDS ETC:

Fix fascia, barge, frieze etc to suit roofing selected.

14. THERMAL INSULATION:

All roofs, walls, and floors are to be insulated in accordance with NZS 4214 and NZS 4218:2009. No insulation material shall be used that does not comply with NZBC clause H1. All insulation materials are to be installed in accordance with manufacturer's recommendations.

15. MOISTURE CONTROL:

Where a vapour barrier is required in the form of foil or polythene film, this barrier shall be fixed according to manufacturer's instructions. Foil or polythene film shall not be used as a substitute for building paper. Building paper shall be properly fixed to bottom plates, especially in veneer construction, to prevent entry of sub-floor air into stud cavities. Linings shall not be fixed until moisture content of framing has been tested and approved.

A proper solvent based paint or varnish finish must be used for plaster (Gibraltar board or fibrous plaster) linings to 'wet' rooms such as kitchens, bathrooms and laundry. Water based/emulsion paints must not be used in such rooms.

16. CEILINGS:

Ceiling linings "*Gib Ultraline*"

GIBRALTAR BOARD: Fix to manufacturer's instructions. 'Fixer' and 'Stopper' to be approved. All nail fixing and joints to be finished to a true even smooth surface. In particular fix all ceilings servicing as structural ceiling diaphragms under terms of NZS 3604:2011. (See Winstone Wallboards Ltd. taped joint system). Check that each wall under or connected to has adequate bracing for a diaphragm.

17. MANHOLE:

Provide manhole in ceiling 600mm x 600mm.

18. WALL LININGS:

See "INTERNAL WALL LININGS" section
Generally shall be of 10mm *Gibraltar Board* and shall be fixed to external walls only after placement of thermal insulation.

19. Aluminium Doors and Windows:

To comply with NZS 3504. All glazing to be in accordance with NZS 4223. Safety glass and mirrors in Bathroom and Ensuite.

20. DOORS AND FRAMES

External doorframes shall be of 40mm full width material, internal 30mm rebated or 25mm (or 18mm) material with 12mm planted stops. Doors shall comply with NZS 1158, with external Fibreglass panel as shown on drawings, all properly constructed with stiles and rails.

21. WARDROBES:

Construct as shown on plan shelving will be painted or mellamine finish.

22. PANTRY KITCHEN CUPBOARDS:

Construct units to sizes shown on plans, with door and shelves.

23. SKIRTINGS :

Finish at junction of floor and wall with 60mm x 12mm skirting with ends neatly butted, scribed or mitred. Scribed to floor where necessary. Where required fix Scotia mould at ceiling junction, supply and fix beads, half rounds and all trim as required to complete the work.

24. BATHROOM; ENSUITE; SHOWER AREAS:

All wall linings to be fixed to manufacturer's specification with adequate capillary gaps or flashing / trim or sealant to prevent leakage. Provide for all sanitary fittings shown on plan and given under "SANITARYWARE/FITTINGS" schedule.

25. LAUNDRY AND TOILET/S:

Fit out as shown on plan and given under "SANITARYWARE/FITTINGS" schedule.

26. METER RECESS:

Provide recess for Electric Meter Board where directed by electrician.

27. HARDWARE:

Allow for the supply of all hardware required. Door handles locks, window fitting, door and drawer pulls, stops, angles, vents, towel rails etc. Allow taking delivery and fix. Door handles polished brass lever action.

28. CLEANING AND COMPLETION:

The Contractor at the conclusion of the Contract shall have all ceilings, walls and woodwork carefully dusted and wiped down. Windows washed and glass free from scratches and paint. Floors brushed and the entire building and site left in a clean condition for occupation.

ROOF COVERINGS, ROOF PLUMBING AND DRAINAGE

1. TYPES OF ROOF COVERINGS:

a) Coverings to the main areas of roof/s shall consist of colour tile metal roof with standard trim.

b) The roof covering Fixer and plumber shall advise on substructure/substrate needs. Inspect and have defects or omissions remedied and do adequate preparatory work.

2. SUBSTRUCTURE AND SUBSTRATES:

a) Timber substructure work shall be to NZS 3604:2011, Section 10- ROOFS, or to specific design, meeting NZBC B1 and B2 requirements. Purlin (roof batten) size and spacing and sarking/sheet substrates to approval in writing by covering manufacturer and be to NZS 3602.

b) Purlin sizes when exposed rafters are used to allow for thermal insulation to meet the NZBC or to greater thickness. End-to-end joints in purlins shall be staggered (Not to occur in line on a single rafter or truss). Provide for closer spacing at ridges and eaves for better fixing against wind uplift.

3. ROOFING UNDERLAY/CLOSING IN WORK:

a) Fix gutters and downpipes (even if temporary). Fix valleys at least 300mm wide with turned edges and base projecting into gutters.

b) Unless otherwise stated, fix breather type building paper ex NZS 2295 to recommendations of roof covering manufacturer. Properly support, lap, turn up at up-stands and projections through roof and turn down into gutter.

4. PREPARATORY WORK:

The roof covering FIXER shall co-ordinate preparatory and installation aspects with plumber (see clauses 1 and 5) and contractor to ensure the following: -

a) Temporary bracing of roof and walls below if some stacking of covering is required; keeping loads on timber to a minimum and not localised on too few members.

b) Good in-plane alignment of purlins and/or sarking and adequate support and fixings for all ridging, capping and over flashing and at all projections through the roof.

c) Neat setting out of work to all roof planes; avoiding any covering or flashing being cut too short, too narrow or in any manner that will prevent secure fixing and long term resistance to rain penetration. Tile, slate and shingle work to be set out to give a full course both at eaves and ridges.

d) Corrosion protection is given to galvanised steel where difficult to paint after fixing. E.g. prime and top coat laps in the roof covering and where lapped by capping and flashing. Also to bottom underside at projections over gutters.

5. INSTALLATION:

The roof covering FIXER shall follow all relevant recommendations of the covering manufacturer and preferably be approved by the manufacturer. Roof flashing and drainage work shall be of a quality expected of work done by Craftsmen/ Registered plumbers - whether or not the Contractor or Fixer employs a plumber to do or supervise the work.

(a) FIXER, plumber and others to wear soft-soled shoes to prevent damage to pre-finished metal, membrane and any special brush, spray or trowel applied coverings.

(b) Fixing of coverings, accessories and flashing shall allow for differential movement. Lapse or joints shall where possible face away from the prevailing winds. SEALANTS SHALL NOT BE USED EXCEPT WHERE PRIOR APPROVED.

(c) Take care of all roofing materials. Any damaged at time of delivery or during construction to be removed from site. Colour match making good of face fixings and minor damage. Each day remove rivet stems, metal scraps and debris from roof and any runs from soldering flux.

6. ROOF PLUMBING AND DRAINAGE:

a) Arrange with Contractor to fix valley gutter (if any), normal gutters (or spouting) and downpipes for earliest possible closing in of the building.

b) Sizing of gutters/spouting and downpipes and downpipe spacing shall accord with Acceptable Solution E1/AS1 -SURFACE WATER.

c) Rainwater collected from roofing shall discharge into surface water drains connecting to a Territorial Authority system (Not into a FOUL WATER DRAIN unless approved by the TA)

7. ON COMPLETION:

Remove all traces of flux after brazing or soldering, swarf, snapped rived stems, metal wastes and other debris from roof surfaces and gutters.

EXTERNAL WALL COVERINGS

1. GENERAL:

Accord with all Clauses under Preliminary and General where they apply to work and materials shown on the drawings.

2. MAIN AREAS:

The main areas of walling shall consist of brick veneer, linea weatherboards and fibrecement above exterior doors and windows.

3. WORKMANSHIP:

The Contractor/carpenter shall straighten all studs and nogs in external walls to the

satisfaction of the Owner and the Cladding Fixer and Wall Lining Fixer before fixing any building paper, bracing panels, (sheathings rigid backings). All to tolerances gave in Table 2.1 of NZS 3604:2011.

4. FIXING AND FINISHING OF WALL CLADDING:

Refer to Section 11 of NZS 3604:2011. Procure and accord with NZ Standards and Manufacturers instructions relating to the types of cladding shown on the drawings and specified above.

5. ON COMPLETION:

Leave all work and adjoining surfaces in a clean, stain free state and remove all rubbish.

INTERNAL WALL LININGS

1. GENERAL:

Accord with all relevant Preliminary and General where they apply to work and materials shown on the drawings. Linings to be fixed after plumber has set out pipe runs and set location on taps etc and after electrical wiring has been run to power and lighting outlets.

2. MATERIALS:

The wall linings shall be Gibraltar Board.

3. WORKMANSHIP:

The Contractor/carpenter shall straighten all studs and nogs to the satisfaction of the Owner and the wall lining fixer before the fixer commences fixing. All to tolerances gave in Table 2.1 of NZS 3604:2011.

4. FIXING AND FINISHING OF WALL LININGS:

Refer to Section 12 - WALL LININGS in NZS 3604:2011. Procure and accord with NZ Standards and manufacturers instructions relating to the types of lining shown on the drawings and specified above.

5. ON COMPLETION:

Leave all work and adjoining surfaces in a clean, stain free state and remove all rubbish.

CEILING LININGS

1. GENERAL:

Accord with all Preliminary and General clauses applying to work and materials shown on the drawings. Linings to be fixed after plumber has set out pipe runs and set location of taps etc and after electrical wiring has been run to power and lighting outlets.

2. MATERIALS:

The ceilings shall consist of 10mm *Gib "Ultraline"*.

3. WORKMANSHIP:

The Contractor/carpenter shall erect and straighten ceiling framing to the satisfaction of the Owner and ceiling lining fixer. All to tolerances given in Table 2.1 of NZS 3604:2011 (remember thermal insulation needs to be provided in the roof-ceiling space. The work needs to be co-ordinated with other trades and care taken to avoid rain wetting).

4. FIXING AND FINISHING OF CEILING LININGS:

Refer to Section 13 - CEILINGS in NZS 3604:2011. Procure and accord with NZ Standards and manufacturers recommendations relating to the lining shown on drawings and mentioned above.

5. ON COMPLETION:

Leave all work and adjoining surfaces in a clean, stain free state and remove all rubbish.

DRAINLAYING

1. EXTENT OF WORK:

Work in this section of the contract comprises all surface and foul water drainage up to above ground level to connect to Plumber's work. Include all PVC drainage pipes and special fittings, construction of manholes, all gully traps and connections for terminal vents, soil and waste pipes. The Drainlayer shall confer with the Plumber and shall arrange with the Contractor before the foundations are laid to fix the exact position of all connections of wastes and drains.

2. DOCUMENTS:

NZBC	B1 / AS1	Structure – general
NZBC	E1 / AS1	Surface water

NZBC	G13 / ASI and AS2 Foul Water
AS/NZS 3500	National plumbing and drainage code
	3500.3: Storm water drainage
NZS 7643	Installation of unplasticized PVC pipe systems
AS/NZS 1260 & 1254	Unplasticized PVC sewer and drain pipe fittings

3. DRAIN TRENCHES:

The excavation of trenches for drains shall be accurately made with base clear and true to grade so that no unnecessary filling is required. Adequate width shall be allowed in accordance with depth of drain to enable laying and jointing to be properly carried out. Trenches shall be kept firm and dry and shall be opened up only in lengths that can be protected, utilised and refilled within a reasonable time.

4. LAYING OF DRAINS:

All drains to be adequately supported by firm trench bottom with additional pocket excavations to avoid sockets etc bearing on the ground.

5. FITTINGS:

The plans show the layout of the system. Additional fittings that are normally required such as inspection points and inspection bends etc that may be required but are not specifically shown must be allowed for by the Drainlayer to comply with normal practice under the regulations or special requirement of the NZBC.

6. FALL IN DRAINS:

The whole of the soil and stormwater drains is to be laid to a regular and even fall.

7. GULLY TRAPS:

Supply all gully traps and securely bed and build up with 5:1 concrete surround, 150mm above finished ground levels. Form large and deep dishings and trowel smooth. All gully traps are to be fitted with large gratings and also a grating or perforated plate above the wastes discharging into it.

8. SEWER AND STORM WATER CONNECTIONS:

Arrange with the Territorial Authority to connect drain to sewer and storm water where provided and pay all related testing fees etc.

SANITARYWARE/FITTINGS

1. GENERAL:

Accord with Preliminary and General clauses applying to this section and means of compliance to relevant NZBC requirements.

2. SCOPE:

This section consists of the supply of materials and labour involved in installing the whole of the water and drainage reticulation and metal flashing to leave the building plumbing systems and stormwater complete and working and the building watertight. See roofing section for roof flashing and roof plumbing.

3. DOCUMENTS:

The sanitary plumber shall be a Craftsman/Registered Plumber and may also be a Registered Drainlayer. He shall accord with the following: -

All work shall be carried out in accordance with the New Zealand Building Code 2004, and its amendments, with the local by-laws and with the relevant clauses of the Acceptable Solutions shall form part of this specification.

NZBC	B1/AS1	Structure – general
NZBC	E1/AS1	Surface water
AS/NZS 1260	PVC pipes and fittings for drain, waster and vent applications	
AS/NZS 3500	National plumbing and drainage code 3500.3: Stormwater drainage	
AS/NZS 1260:2002	Unplasticised PVC waste and ventilating pipe, fittings and accessories.	
AS/NZS 1477:1996	Unplasticised PVC pipes for cold water services.	
AS/NZS 1260 & 1254	Unplasticized PVC sewer and drain pipe and fittings.	

4. MATERIALS:

All materials and fittings shall be the best of their respective kinds.
All cold water piping may be unplasticised PVC or polybutylene.
All hot water piping may be copper or polybutylene.
All wastes, soil and vent pipes may be unplasticised PVC

5. WORKMANSHIP:

All work shall be in accordance with best trade practice. All runs shall be in straight lines with minimum bends and junctions.

All copper bends shall be either easy pipe bends or preformed elbows braze jointed. (Elbows shall be restricted to an absolute minimum.)

All pipework shall be concealed in concrete floor, framing or ceiling cavity.

Any pipework set into concrete shall be polybutylene and must be fully lagged with Denso tape or similar to allow for thermal and mechanical movement.

6. PIPES AND SIZES:

As a minimum requirement all individual fittings e.g. cisterns, sinks, basins etc. shall have a 12mm connection – cold (and hot where applicable).

Where fittings are grouped together 20mm branch supply (hot and cold) will be taken to each group with 12mm connections made.

Showers will be connected to branch lines independent of other fittings with their supply taken as directly as possible from either the water heater or the cold supply source.

Provide piped reticulation to all fittings shown in cold supply; and hot where applicable from water heater.

7. WASTES:

Provide U/PVC wastes from all fittings to gully traps as shown either to sizes given or to comply with standards. Over-length wastes to be oversized in diameter and to be fitted with screw cap cleaning eye and breather pipe mounted 2m up wall.

All wastes to be turned down into gullys – under grates (maximum of 4 per gully).

8. VENTS:

Provide all terminal vents to drains and back vents to fittings, from U/PVC, to comply with standards.

All back vent pipes to be run in wall cavities and project above roof.
All terminal vents to be neatly clipped to exterior of wall where shown. Terminate with perforated PVC flush end cap.

9. FITTINGS:

Provide and install all fittings shown on drawings and/or scheduled. Connect all water supplies pipes, wastes and taps and valves and leave complete in working order.

10. HOT WATER SYSTEM:

Water heating shall be Gas Infinity hot water system or similar.

ELECTRICAL

1. FEES:

Pay all fees and charges and obtain all necessary permits for this trade.

2. MATERIALS AND WORKMANSHIP:

All materials used under this contract shall be to approve New Zealand or overseas Standards. Allow for materials necessary to complete the Contract, whether specified or not. All work shall be carried out by a Registered Electrician holding a current practice licence in accordance with regulations and best trade practice and in a manner which will cause minimum inconvenience to other workmen and the work as a whole. Do all cutting away, drilling etc and with timber cut the minimum only for the entry of cables.

3. MAINS SUPPLY:

Arrange with the Electric Supply Authority, allow for and pay all fees for the connection of underground supply to the residence. Visit site to assess costs of obtaining supply, before submitting a tender for the work.

4. METER BOX:

Provide and install recessed meter box where shown on plan. Confer with Carpenter for trimming it.

5. MAIN SWITCHBOARD:

Provide and install in recess main switchboard complete with all necessary control and auxiliary equipment.

6. WIRING:

a) Run new 2 and 3 core TPS cable for sub-circuit wiring to lights, power outlets, switches and for installation of appliances shown in the house drawings and/or in the Electrical Fittings, Fixtures and Appliances Schedule.

b) Locate cable runs in centres of timber framing members so that nailing or screwing of linings can be done without damaging cables. Holes made should be just sufficient in size to pull cables through - not adversely affect the strength of the framing.

c) Ensure wiring is to locations agreed with Owner without fouling installations by other trades e.g.: to required mounting height of switches and power outlets above floor level or above work tops and to required alignment of lights along and across ceilings.

7. SCHEDULE ITEMS:

Provide and install all goods in the ELECTRICAL SCHEDULE, except where it is indicated that the Owner or others shall supply.

Connect:

- Hob and Oven
- Dishwasher
- Circuits to internal Distribution Board

Wire:

- 2 TV Outlets (aerial not included)
- 2 Telephone Points

Install:

- Mains to Meter Board
- Mains Cable
- Range hood

MISCELLANEOUS

1. KITCHEN:

The supply and fitting of the kitchen includes cupboards, pantry, benchtops and bowl (tapware supplied by plumber). There will be a P.C. Sum for the kitchen.

2. VANITIES:

To supply and fit one (1) vanity there will be a P.C. Sum.

3. APPLIANCES:

Oven and hobs will be Bosch unless otherwise requested by the Client

5. DECORATING AND PAINTING:

a) Exterior painting to all fascias and soffits.

WDC APPROVED

WDC APPROVED

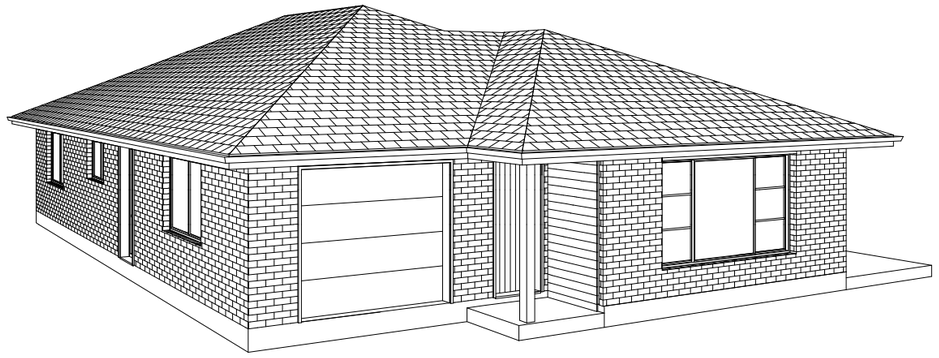

PROPOSED RESIDENCE FOR
MR STEVE & MRS GAY ROBERTSON
10 LEICESTER PLACE, SPRINGVALE,
WANGANUI, NEW ZEALAND

Superseded

TABLE OF CONTENTS

1. LOCATION PLAN / SITE PLAN
2. FLOOR PLAN
3. ELEVATIONS
4. SET-OUT PLAN
5. SECTION
6. FOUNDATION PLAN
7. ELECTRICAL LAYOUT
8. BRACING PLAN
9. DRAINAGE PLAN
10. ROOF PLAN
11. TYPICAL DETAILS
12. TYPICAL DETAILS
13. TYPICAL DETAILS

BUILDERS:
DEVON HOMES
REUTERS CONSTRUCTION LTD.

165A, GREAT NORTH ROAD,
WANGANUI,
NEW ZEALAND.
PHONE: +64-6-3452393
FAX: +64-6-3452165
EMAIL: reuters@devonhomes.co.nz
HTTP://www.devonhomes.co.nz

WDC APPROVED

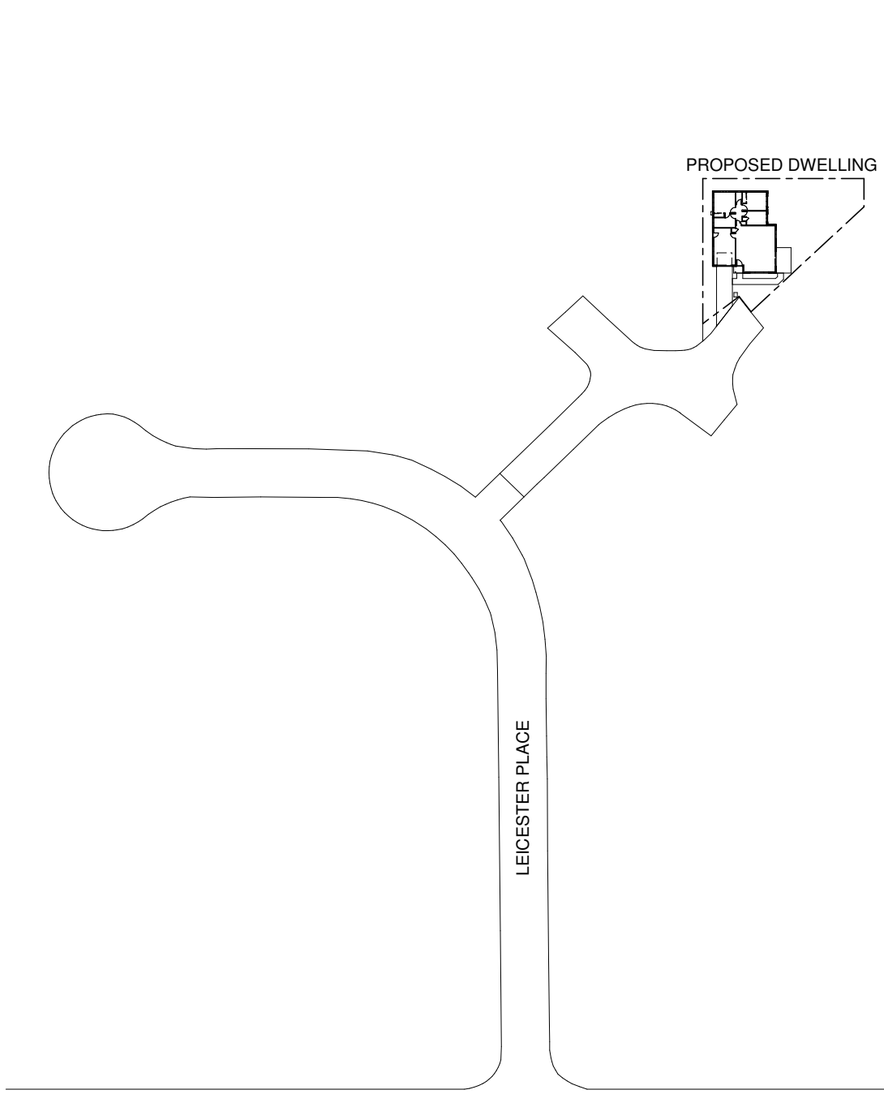

LOCATION PLAN

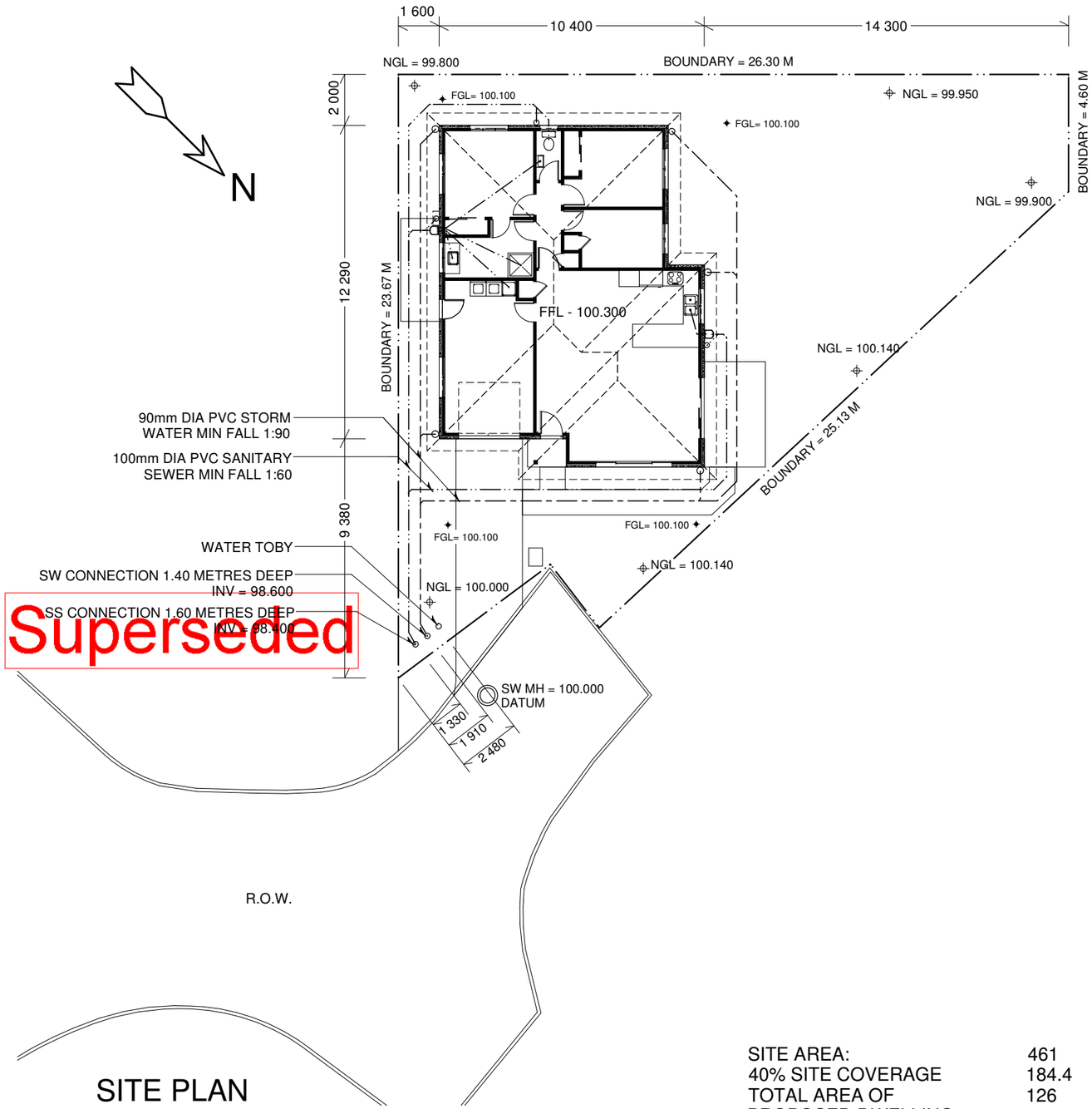

SITE PLAN

SITE AREA:	461	SQ M
40% SITE COVERAGE	184.4	SQ M
TOTAL AREA OF PROPOSED DWELLING	126	SQ M

PROPOSED RESIDENCE FOR

MR STEVE & MRS GAY ROBERTSON

10 LEICESTER PLACE, SPRINGVALE, WANGANUI

LOCATION PLAN
SITE PLAN

Scale:	Sheet No.
1:200	1
Date: 23 FEB 2017	Revision
Job No.	

No	Dates	Amendments
a		
b		
c		
d		
e		
f		

Notes:-

Member Certified Builders

DEVON HOMES
REUTERS CONSTRUCTION LTD
165 A, GREAT NORTH ROAD, WANGANUI NEW ZEALAND
PHONE: +64-6-3452393 FA X: +64-6-3452165
EMAIL: reuters@devonhomes.co.nz http://www.devonhomes.co.nz

These plans are the copyright of REUTERS CONSTRUCTIONS LTD

WDC APPROVED

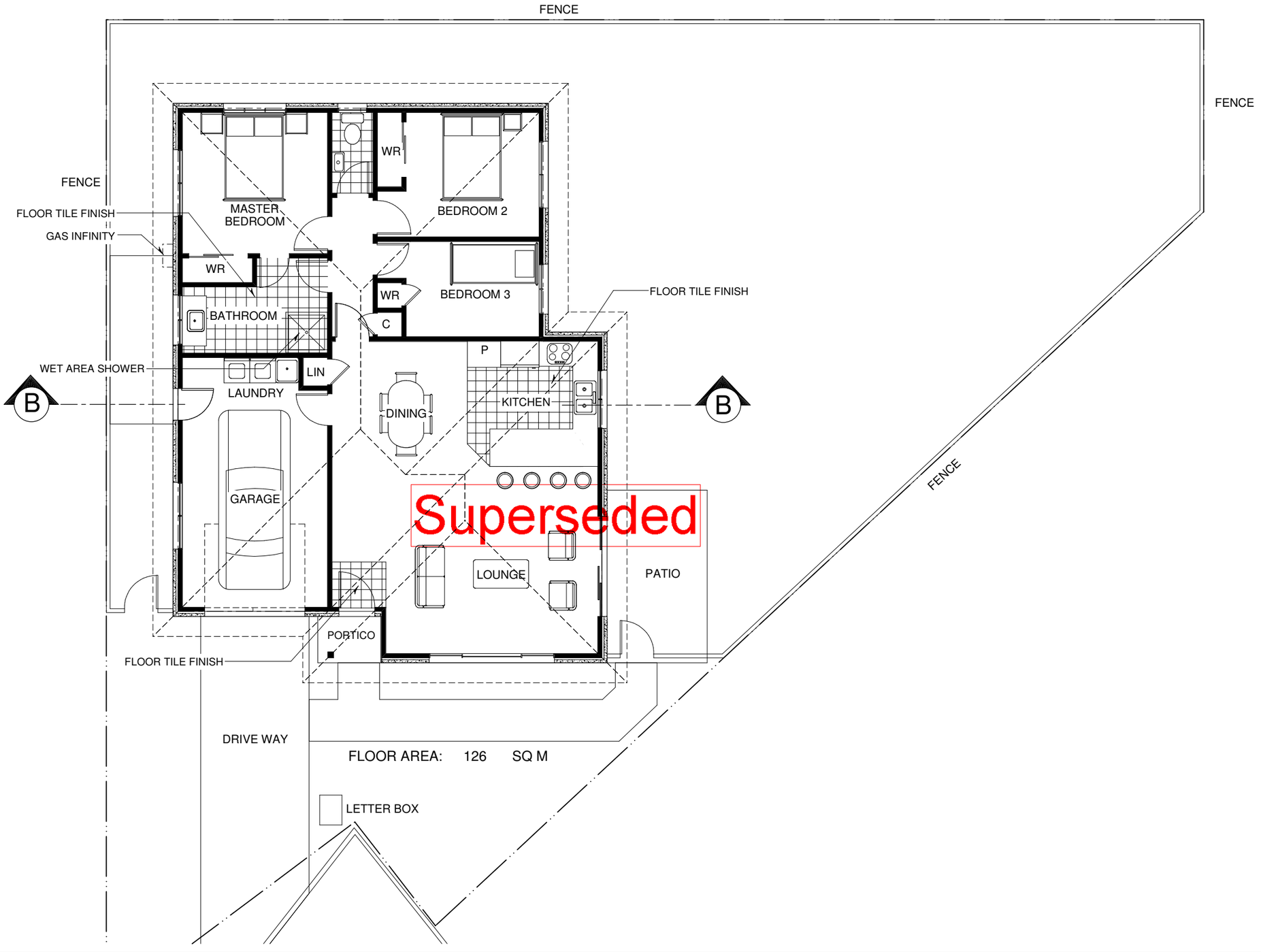

PROPOSED RESIDENCE FOR

MR STEVE & MRS GAY ROBERTSON

10 LEICESTER PLACE, SPRINGVALE, WANGANUI

FLOOR PLAN

Scale:	Sheet No.
1:100	2
Date: 23 FEB 2017	Revision
Job No.	

No	Dates	Amendments
a		
b		
c		
d		
e		
f		

Notes:-

DEVON HOMES

REUTERS CONSTRUCTION LTD

165 A, GREAT NORTH ROAD, WANGANUI NEW ZEALAND

PHONE: +64-6-3452393 FA X: +64-6-3452165

EMAIL: reuters@devonhomes.co.nz http://www.devonhomes.co.nz

These plans are the copyright of REUTERS CONSTRUCTIONS LTD

WDC APPROVED

RISK MATRIX FOR ALL ELEVATIONS		
WIND ZONE	HIGH	1
NUMBER OF STOREYS	LOW	0
WALL ROOF INTERSECTION	LOW	0
EAVES WIDTH	MEDIUM	1
ENVELOPE COMPLEXITY	MEDIUM	1
DECK DESIGN	LOW	0
TOTAL SCORE		3



NORTH - EAST ELEVATION



SOUTH - EAST ELEVATION

Superseded

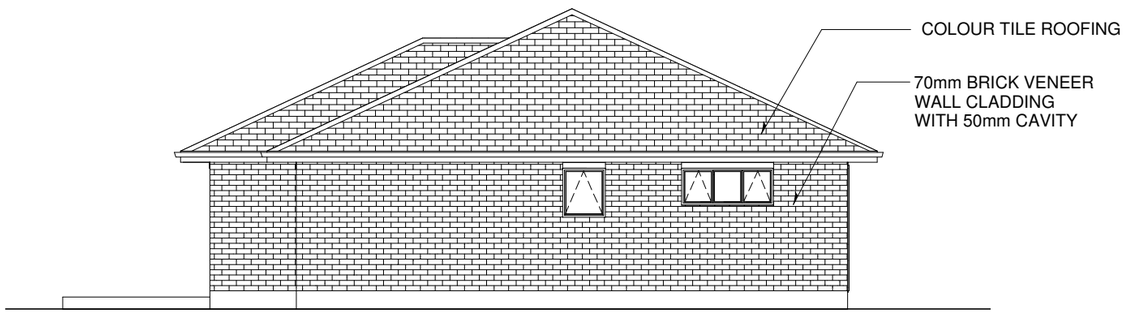

SOUTH - WEST ELEVATION

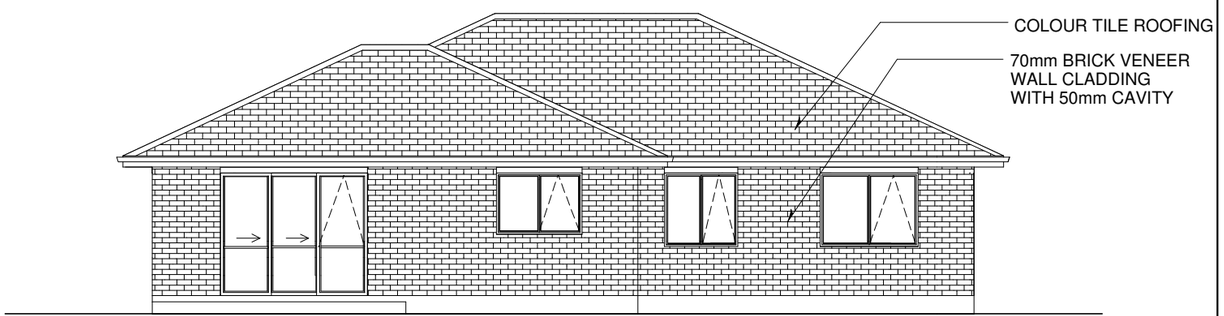

NORTH - WEST ELEVATION

ALL EXTERIOR DOORS & WINDOWS EXCEPT FOR GARAGE TO BE DOUBLE GLAZING

PROPOSED RESIDENCE FOR

MR STEVE & MRS GAY ROBERTSON

10 LEICESTER PLACE, SPRINGVALE, WANGANUI

ELEVATIONS

Scale:	Sheet No.
1:100	3
Date: 23 FEB 2017	Revision
Job No.	

No	Dates	Amendments
a		
b		
c		
d		
e		
f		

Notes:-

Member Certified Builders

DEVON HOMES

REUTERS CONSTRUCTION LTD

165 A, GREAT NORTH ROAD, WANGANUI NEW ZEALAND

PHONE: +64-6-3452393 FA X: +64-6-3452165

EMAIL: reuters@devonhomes.co.nz http://www.devonhomes.co.nz

These plans are the copyright of REUTERS CONSTRUCTIONS LTD

WDC APPROVED

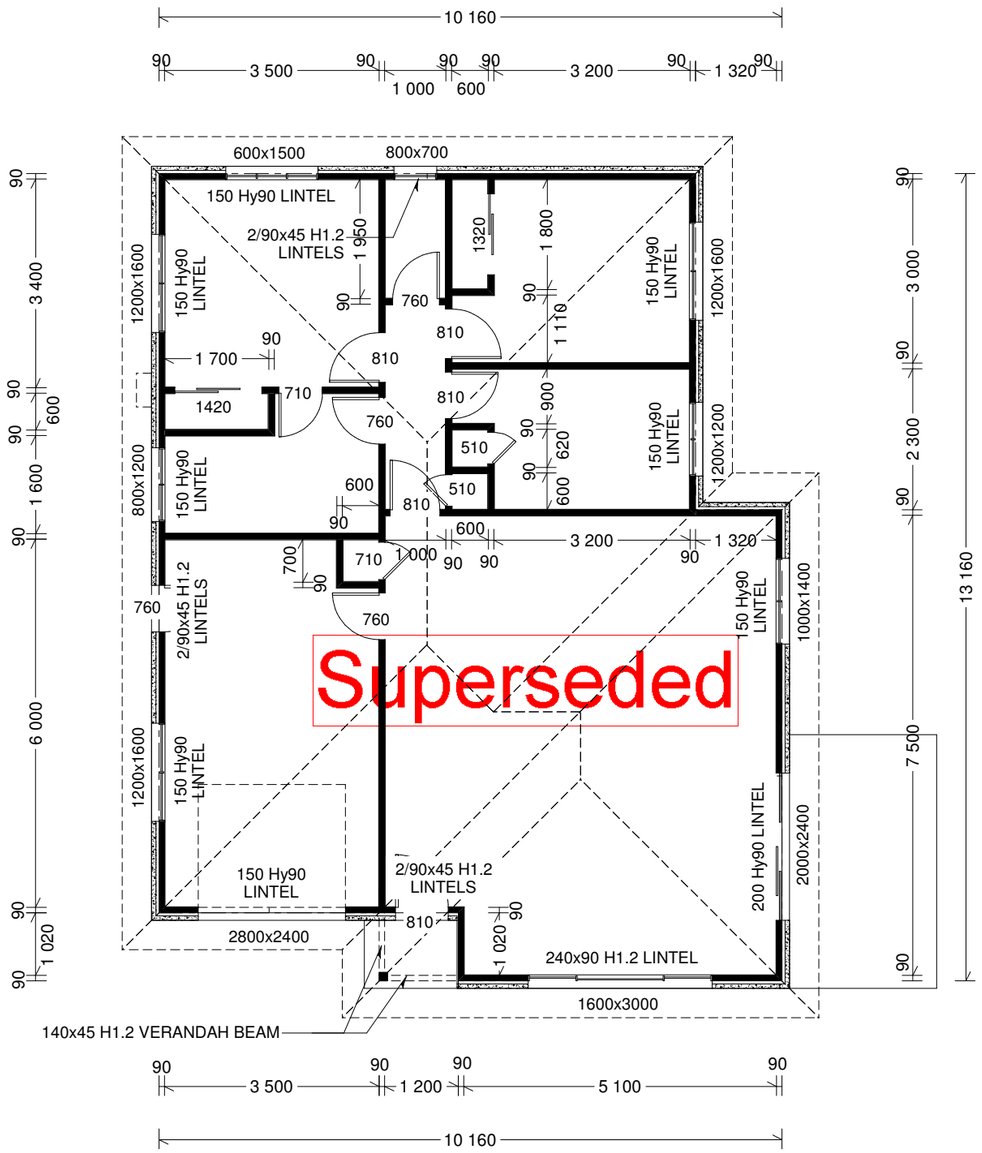

PROPOSED RESIDENCE FOR

MR STEVE & MRS GAY ROBERTSON

10 LEICESTER PLACE, SPRINGVALE, WANGANUI

SET-OUT PLAN

Scale:	Sheet No.
1:100	4
Date: 23 FEB 2017	Revision
Job No.	

No	Dates	Amendments
a		
b		
c		
d		
e		
f		

Notes:-

DEVON HOMES

REUTERS CONSTRUCTION LTD

165 A, GREAT NORTH ROAD, WANGANUI NEW ZEALAND

PHONE: +64-6-3452393 FA X: +64-6-3452165

EMAIL: reuters@devonhomes.co.nz http://www.devonhomes.co.nz

These plans are the copyright of REUTERS CONSTRUCTIONS LTD

WDC APPROVED

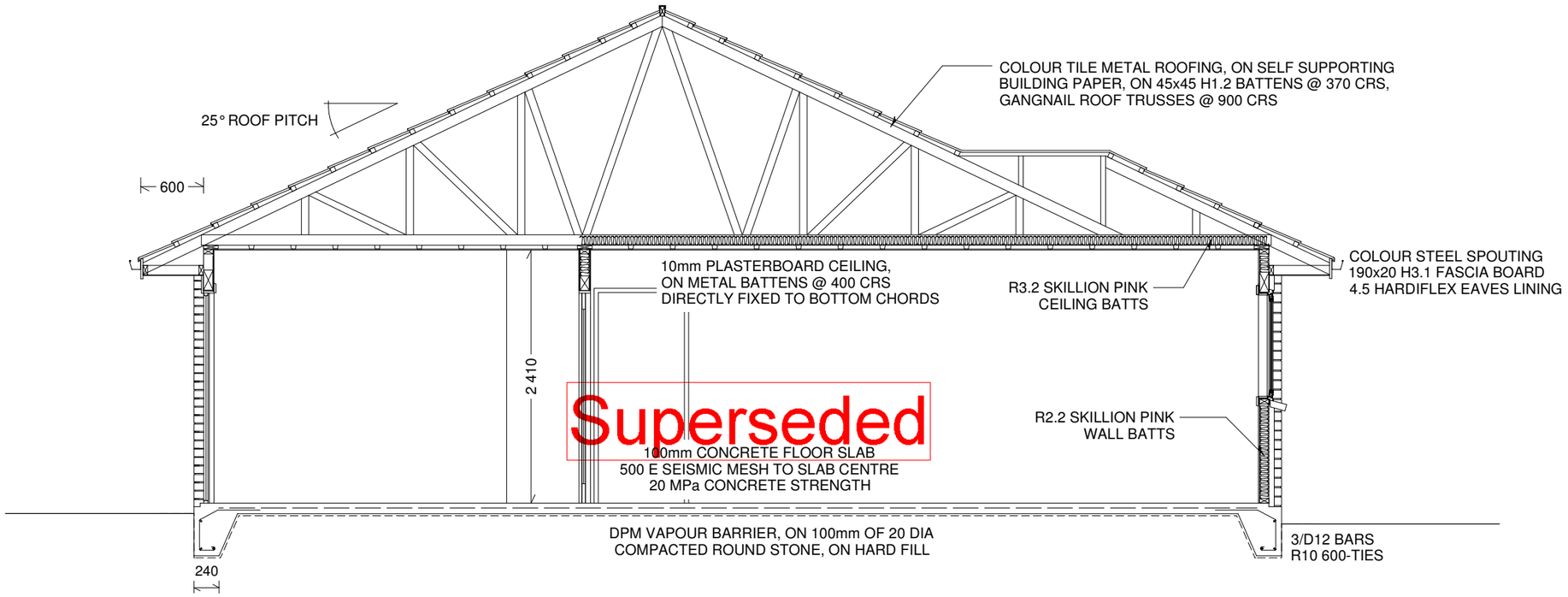

SECTION - B

TIMBER GRADES: ALL TIMBER TO BE MSG8, UNLESS SPECIFIED

2.40 METRES STUDS HEIGHT: 90x45 H1.2 FRAMING STUDS @ 600 CRS

PROPOSED RESIDENCE FOR

MR STEVE & MRS GAY ROBERTSON

10 LEICESTER PLACE, SPRINGVALE, WANGANUI

SECTION

Scale:	Sheet No.
1:50	5
Date: 23 FEB 2017	Revision
Job No.	

No	Dates	Amendments
a		
b		
c		
d		
e		
f		

Notes:-

DEVON HOMES

REUTERS CONSTRUCTION LTD

165 A, GREAT NORTH ROAD, WANGANUI NEW ZEALAND

PHONE: +64-6-3452393 FA X: +64-6-3452165

EMAIL: reuters@devonhomes.co.nz http://www.devonhomes.co.nz

These plans are the copyright of REUTERS CONSTRUCTIONS LTD

WDC APPROVED

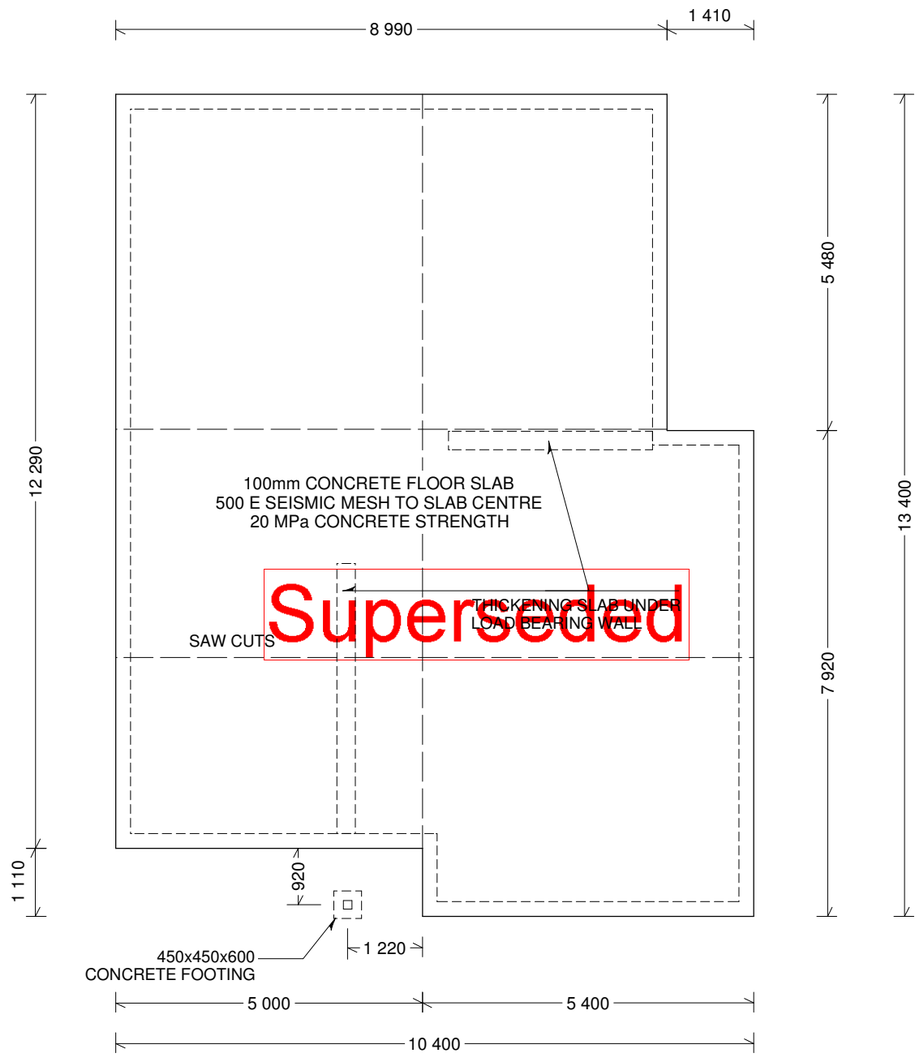

Superseded

PROPOSED RESIDENCE FOR

MR STEVE & MRS GAY ROBERTSON

10 LEICESTER PLACE, SPRINGVALE, WANGANUI

FOUNDATION PLAN

Scale:	Sheet No.
1:100	6
Date: 23 FEB 2017	Revision
Job No.	

No	Dates	Amendments
a		
b		
c		
d		
e		
f		

Notes:-

DEVON HOMES
REUTERS CONSTRUCTION LTD
165 A, GREAT NORTH ROAD, WANGANUI NEW ZEALAND
PHONE: +64-6-3452393 FA X: +64-6-3452165
EMAIL: reuters@devonhomes.co.nz http://www.devonhomes.co.nz
These plans are the copyright of REUTERS CONSTRUCTIONS LTD

WDC APPROVED

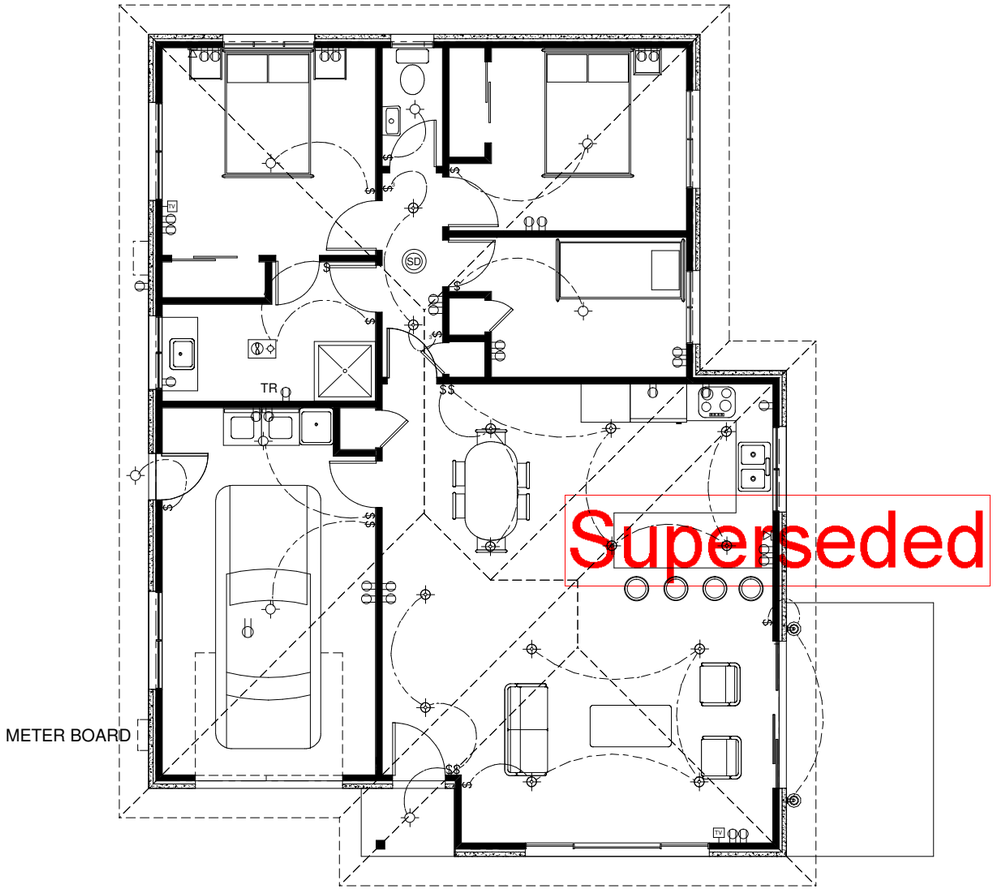

Superseded

ELECTRICAL LEGEND

	BATTEN HOLDER	
	DOWN LIGHTS	
	TELEPHONE	
TV	TELEVISION	
	POWERPOINT	
SD	SMOKE DETECTOR	
$	LIGHT SWITCH	
	ELECTRICAL CONNECTION	
	HEAT LIGHT FAN	
TR	HEATED TOWEL RAIL	
	WALL LIGHT	

PROPOSED RESIDENCE FOR

MR STEVE & MRS GAY ROBERTSON

10 LEICESTER PLACE, SPRINGVALE, WANGANUI

ELECTRICAL LAYOUT

Scale:	Sheet No.
1:100	7
Date: 23 FEB 2017	Revision
Job No.	

No	Dates	Amendments
a		
b		
c		
d		
e		
f		

Notes:-

DEVON HOMES

REUTERS CONSTRUCTION LTD

165 A, GREAT NORTH ROAD, WANGANUI NEW ZEALAND

PHONE: +64-6-3452393 FA X: +64-6-3452165

EMAIL: reuters@devonhomes.co.nz http://www.devonhomes.co.nz

These plans are the copyright of REUTERS CONSTRUCTIONS LTD

WDC APPROVED

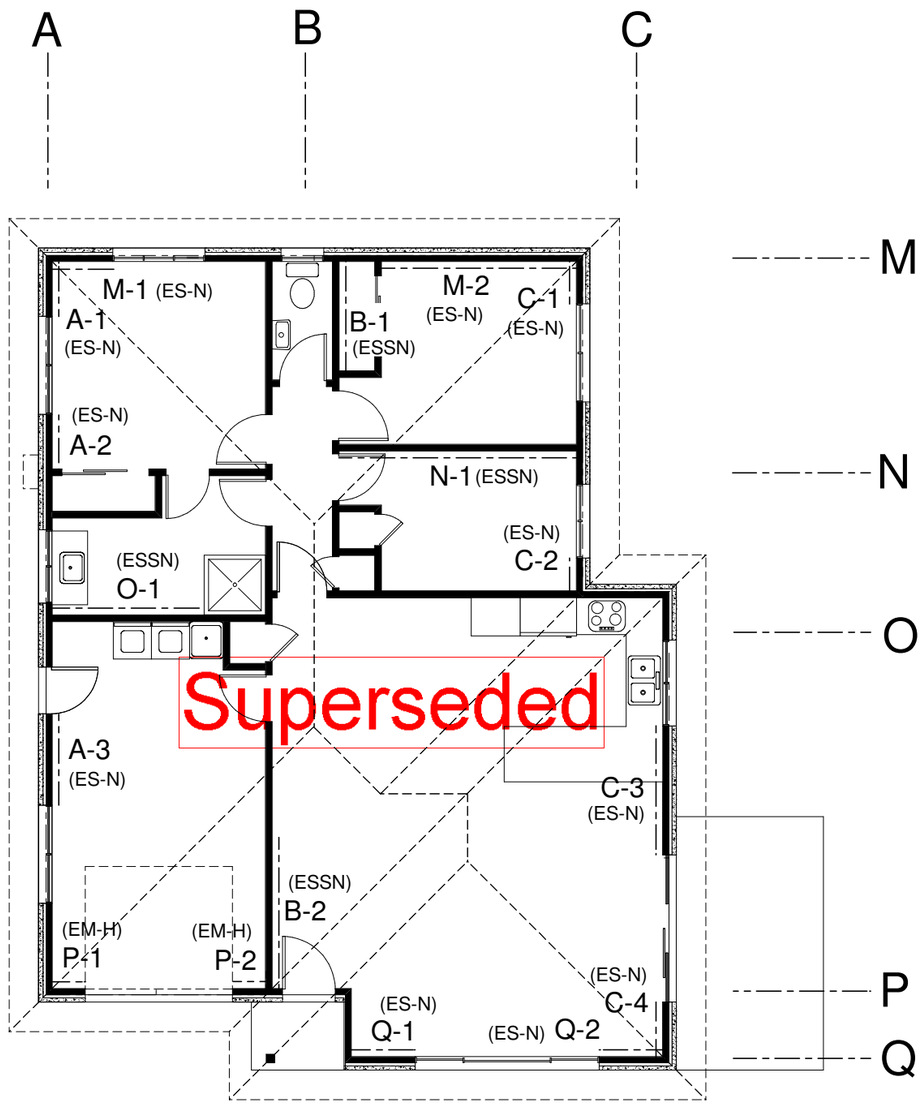

PROPOSED RESIDENCE FOR

MR STEVE & MRS GAY ROBERTSON

10 LEICESTER PLACE, SPRINGVALE, WANGANUI

BRACING PLAN

Scale:	Sheet No.
1:100	8
Date: 23 FEB 2017	Revision
Job No.	

No	Dates	Amendments
a		
b		
c		
d		
e		
f		

Notes:-

DEVON HOMES

REUTERS CONSTRUCTION LTD

165 A, GREAT NORTH ROAD, WANGANUI NEW ZEALAND

PHONE: +64-6-3452393 FA X: +64-6-3452165

EMAIL: reuters@devonhomes.co.nz http://www.devonhomes.co.nz

These plans are the copyright of REUTERS CONSTRUCTIONS LTD

WDC APPROVED

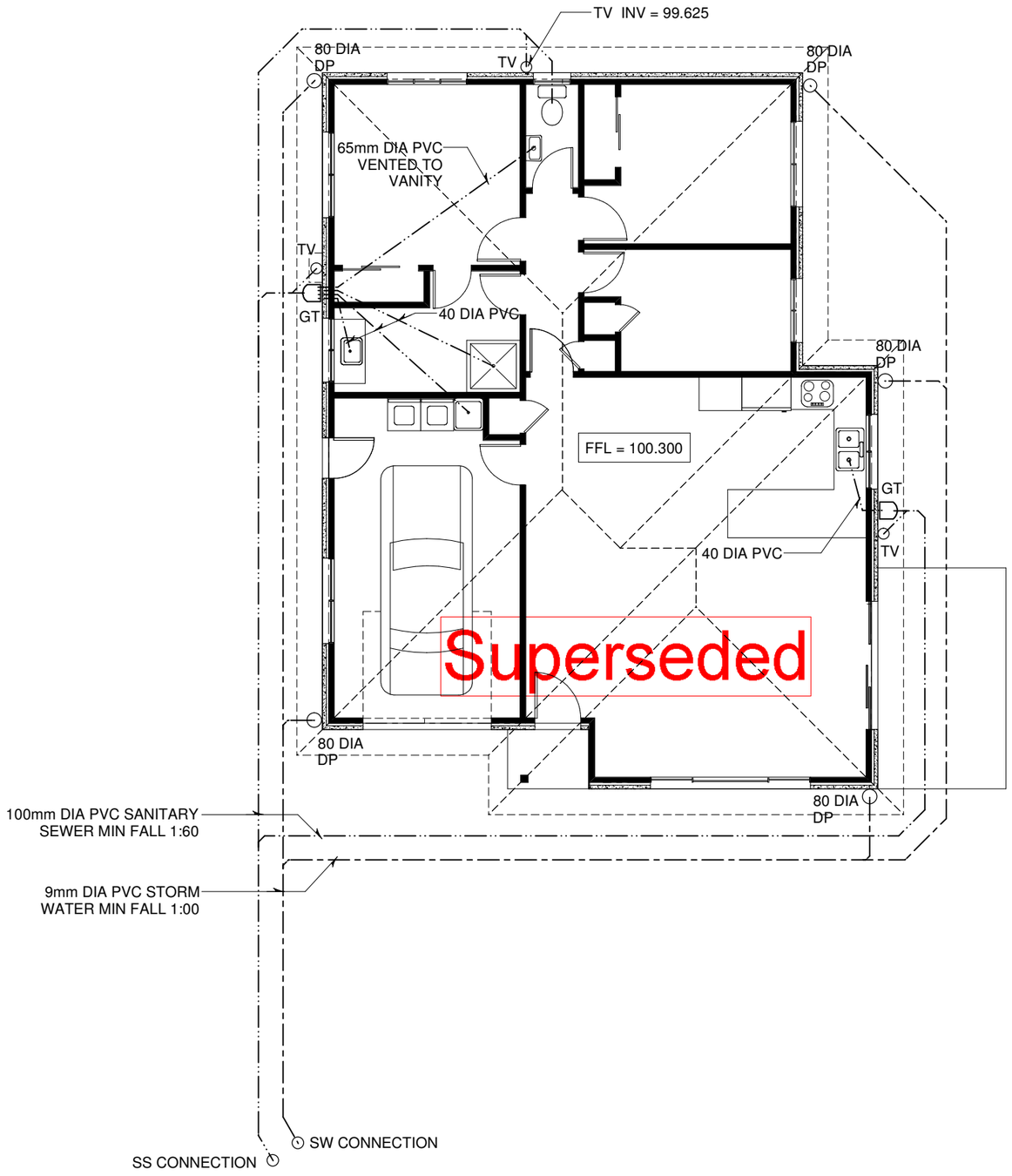

PROPOSED RESIDENCE FOR

MR STEVE & MRS GAY ROBERTSON

10 LEICESTER PLACE, SPRINGVALE, WANGANUI

DRAINAGE PLAN

Scale:	Sheet No.
1:100	9
Date: 23 FEB 2017	Revision
Job No.	

No	Dates	Amendments
a		
b		
c		
d		
e		
f		

Notes:-

DEVON HOMES

REUTERS CONSTRUCTION LTD

165 A, GREAT NORTH ROAD, WANGANUI NEW ZEALAND

PHONE: +64-6-3452393 FA X: +64-6-3452165

EMAIL: reuters@devonhomes.co.nz http://www.devonhomes.co.nz

These plans are the copyright of REUTERS CONSTRUCTIONS LTD

WDC APPROVED

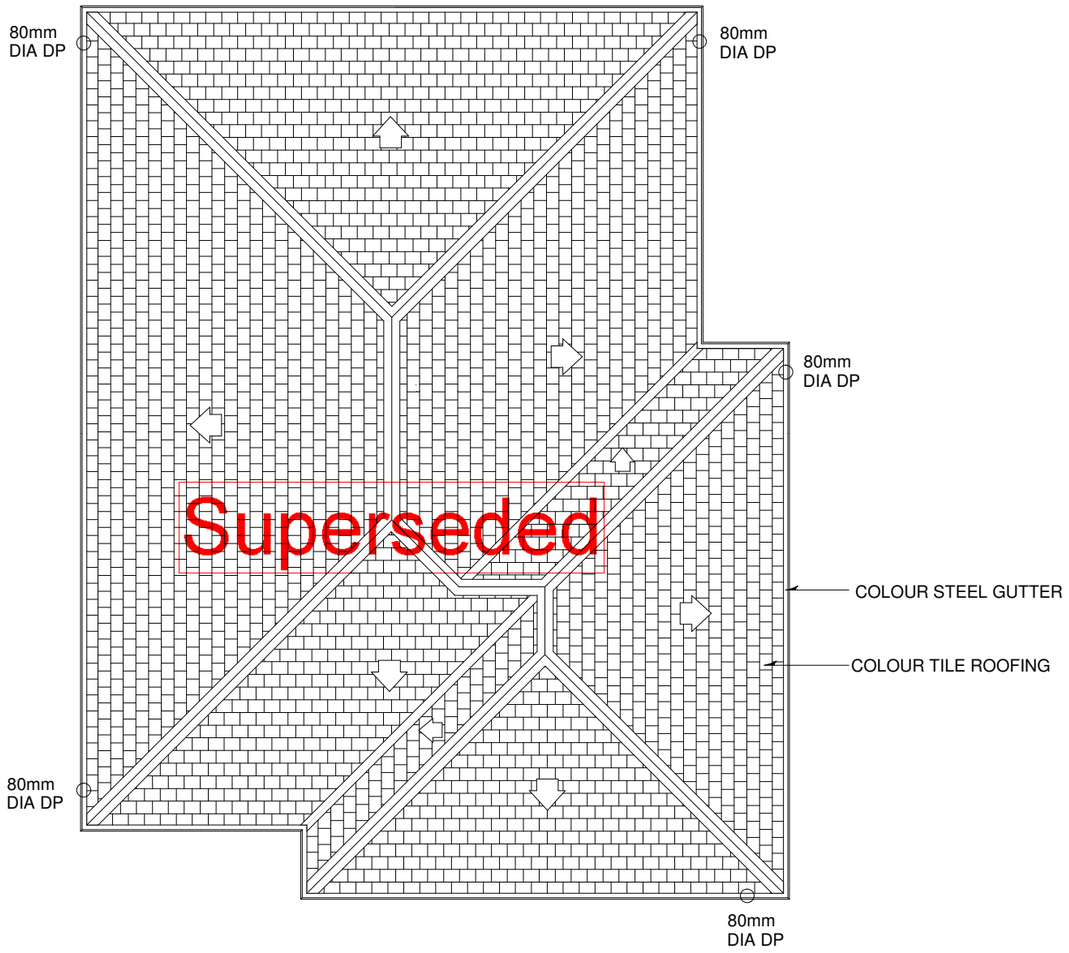

PROPOSED RESIDENCE FOR

MR STEVE & MRS GAY ROBERTSON

10 LEICESTER PLACE, SPRINGVALE, WANGANUI

ROOF PLAN

Scale:	Sheet No.
1:100	10
Date: 23 FEB 2017	Revision
Job No.	

No	Dates	Amendments
a		
b		
c		
d		
e		
f		

Notes:-

DEVON HOMES

REUTERS CONSTRUCTION LTD

165 A, GREAT NORTH ROAD, WANGANUI NEW ZEALAND

PHONE: +64-6-3452393 FA X: +64-6-3452165

EMAIL: reuters@devonhomes.co.nz http://www.devonhomes.co.nz

These plans are the copyright of REUTERS CONSTRUCTIONS LTD

WDC APPROVED

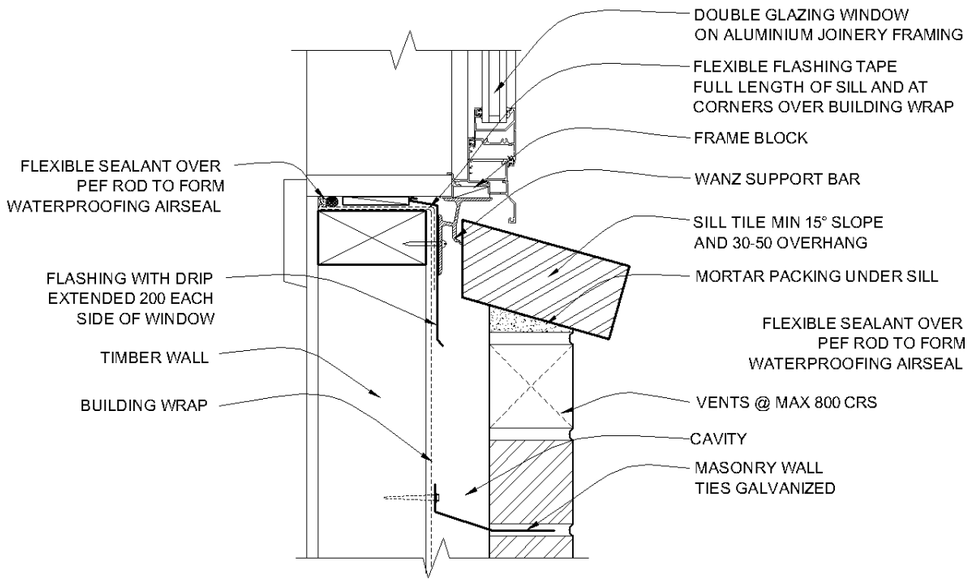

MASONRY VENEER
WINDOW SILL DETAIL

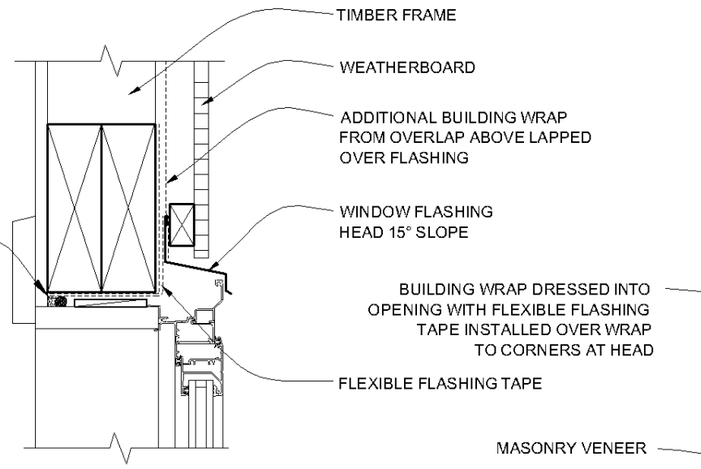

MASONRY VENEER
WINDOW HEAD DETAIL

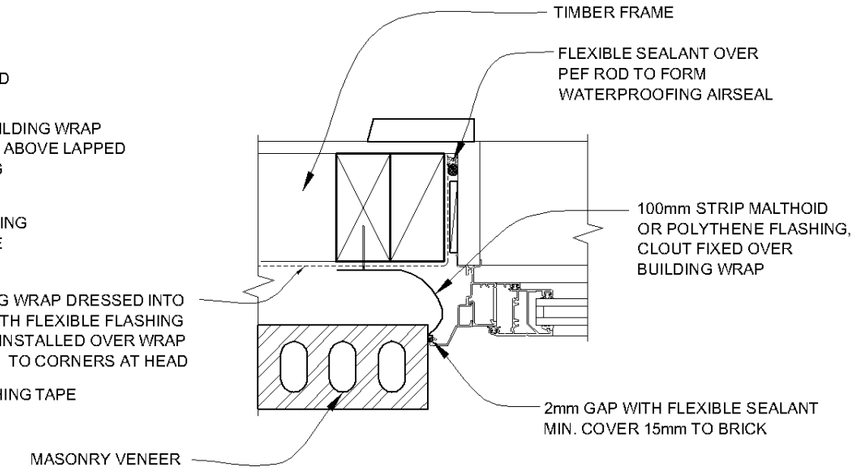

MASONRY VENEER
WINDOW JAMB DETAIL

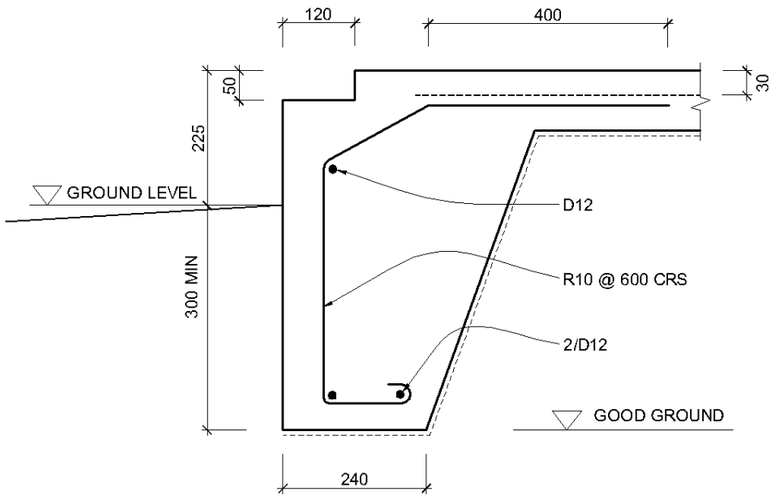

FOUNDATION DETAIL
@ MASONRY VENEER

Superseded

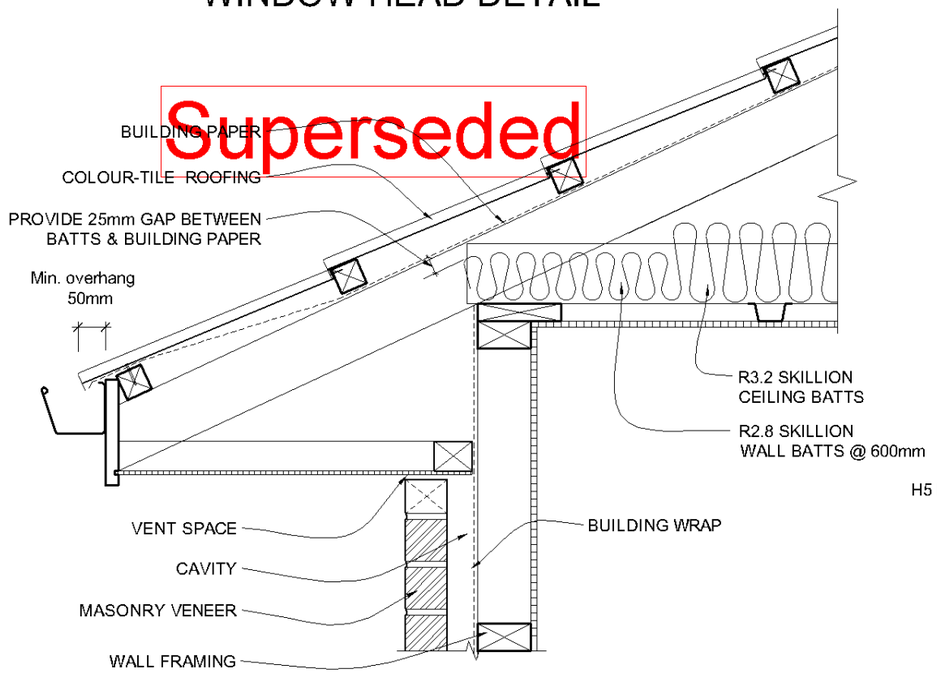

SOFFIT DETAIL @ MASONRY VENEER

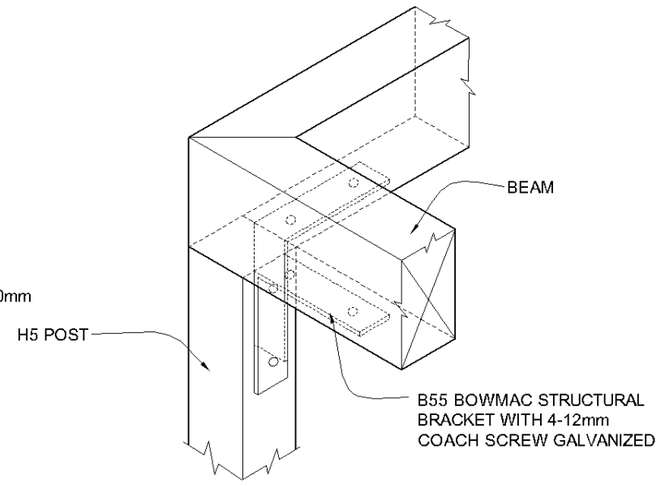

POST & BEAM FIXING DETAIL

PROPOSED RESIDENCE FOR

MR STEVE & MRS GAY ROBERTSON

10 LEICESTER PLACE, SPRINGVALE, WANGANUI

TYPICAL DETAILS

Scale:	Sheet No.
NTS	11
Date: 23 FEB 2017	Revision
Job No.	

No	Dates	Amendments
a		
b		
c		
d		
e		
f		

Notes:-

Member Certified Builders

DEVON HOMES
REUTERS CONSTRUCTION LTD
165 A, GREAT NORTH ROAD, WANGANUI NEW ZEALAND
PHONE: +64-6-3452393 FA X: +64-6-3452165
EMAIL: reuters@devonhomes.co.nz http://www.devonhomes.co.nz

These plans are the copyright of REUTERS CONSTRUCTIONS LTD

WDC APPROVED

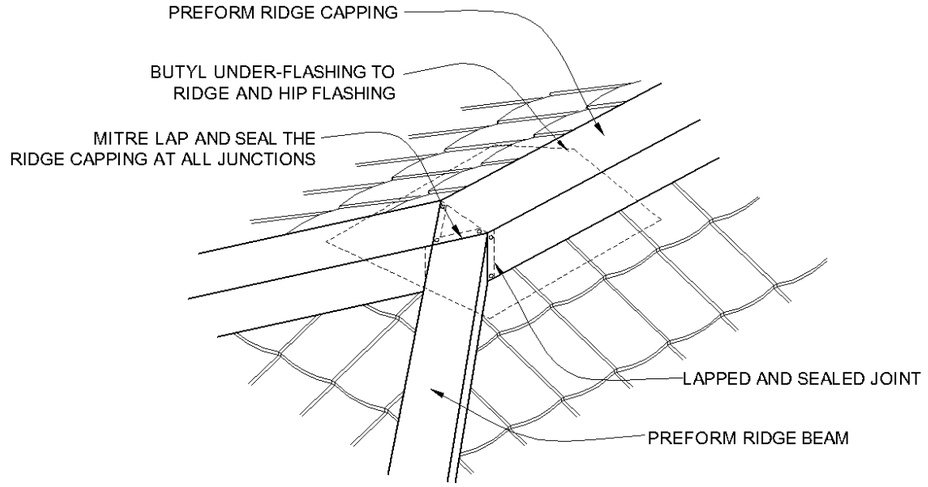

RIDGE TO HIP DETAIL

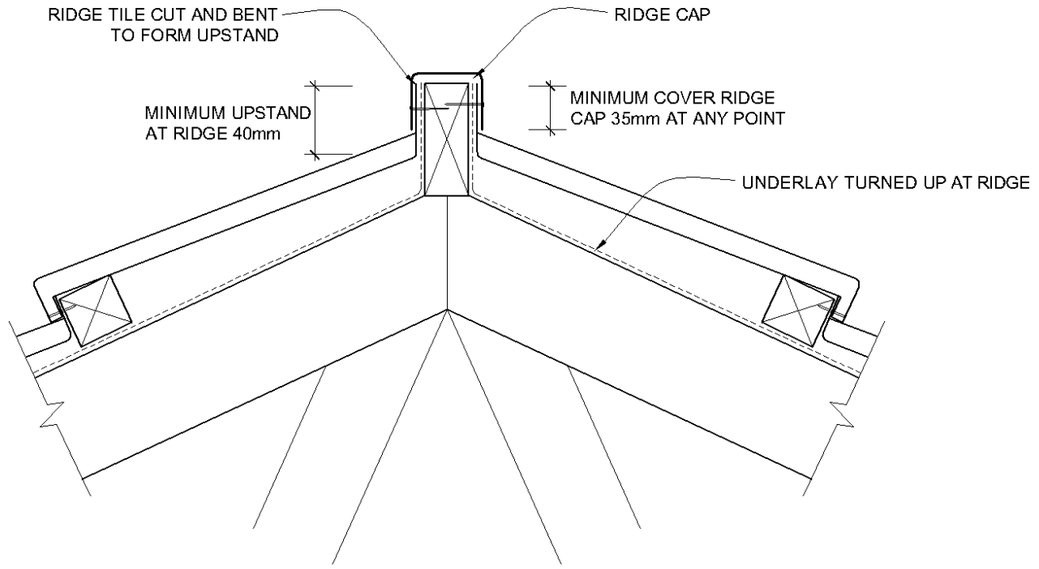

RIDGE / HIP FLASHING DETAIL

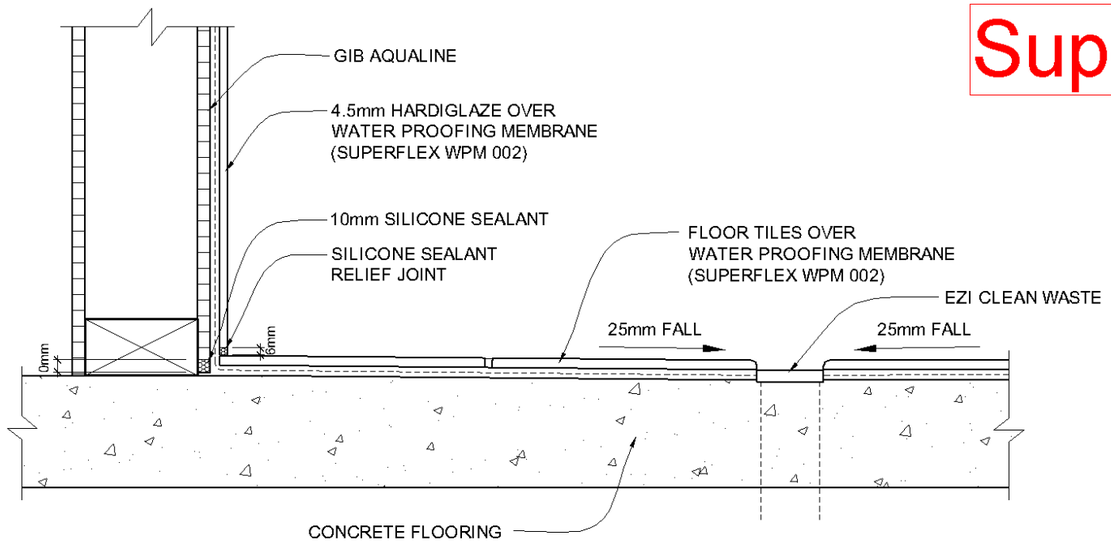

WET AREA SHOWER DETAIL

Superseded

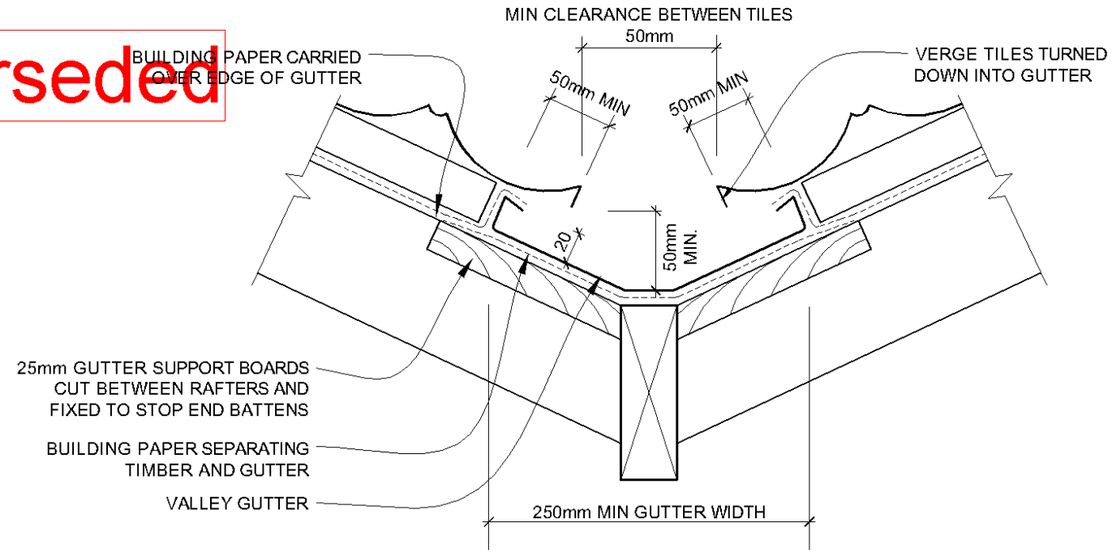

VALLEY GUTTER DETAIL

PROPOSED RESIDENCE FOR

MR STEVE & MRS GAY ROBERTSON

10 LEICESTER PLACE, SPRINGVALE, WANGANUI

TYPICAL DETAILS

Scale:	Sheet No.
NTS	12
Date: 23 FEB 2017	Revision
Job No.	

No	Dates	Amendments
a		
b		
c		
d		
e		
f		

Notes:-

DEVON HOMES
REUTERS CONSTRUCTION LTD
165 A, GREAT NORTH ROAD, WANGANUI NEW ZEALAND
PHONE: +64-6-3452393 FA X: +64-6-3452165
EMAIL: reuters@devonhomes.co.nz http://www.devonhomes.co.nz

These plans are the copyright of REUTERS CONSTRUCTIONS LTD

WDC APPROVED

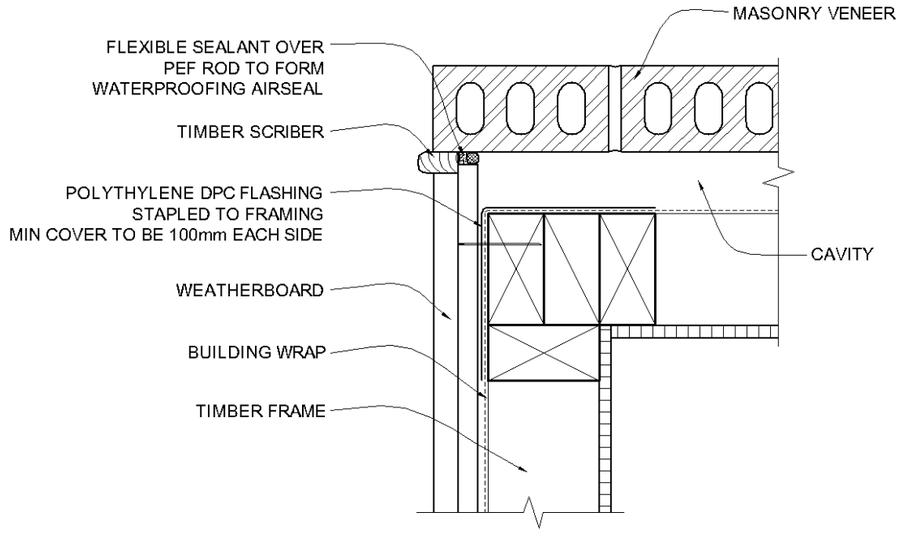

MASONRY VENEER TO WEATHERBOARD CORNER DETAIL

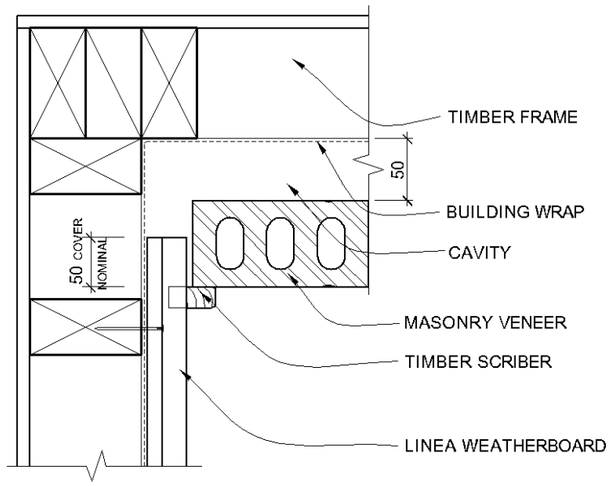

MASONRY VENEER TO WEATHERBOARDSCORNER DETAILS

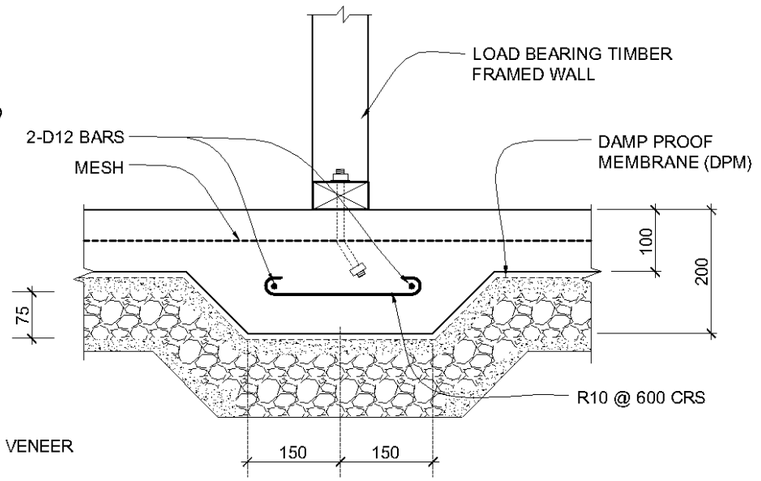

FLOOR THICKENING DETAIL

Superseded

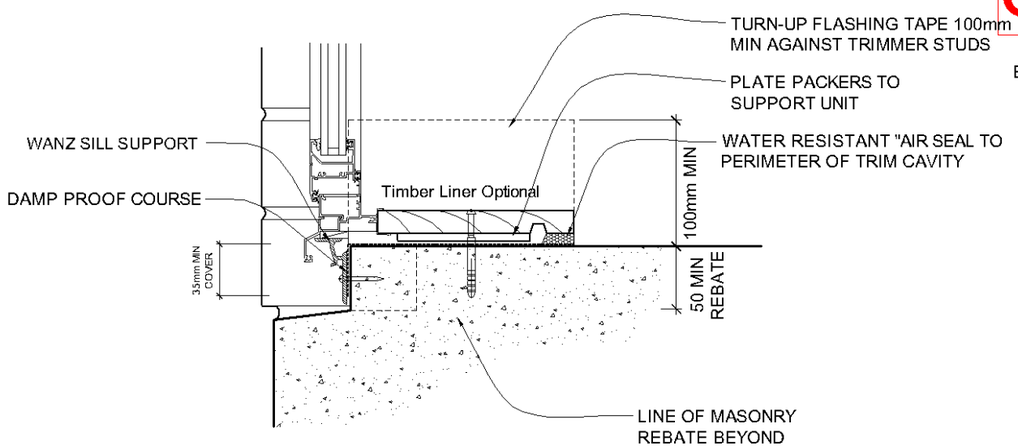

SILL THRESHOLD FLASHING DETAIL

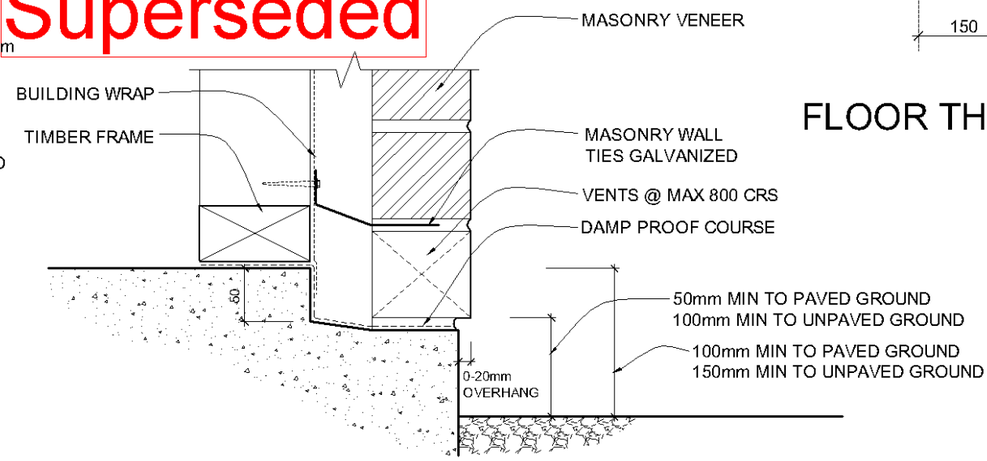

MASONRY VENEER FLOOR REBATE DETAIL

PROPOSED RESIDENCE FOR

MR STEVE & MRS GAY ROBERTSON

10 LEICESTER PLACE, SPRINGVALE, WANGANUI

TYPICAL DETAILS

Scale:	Sheet No.
NTS	13
Date: 23 FEB 2017	Revision
Job No.	

No	Dates	Amendments
a		
b		
c		
d		
e		
f		

Notes:-

Member Certified Builders

DEVON HOMES

REUTERS CONSTRUCTION LTD

165 A, GREAT NORTH ROAD, WANGANUI NEW ZEALAND

PHONE: +64-6-3452393 FA X: +64-6-3452165

EMAIL: reuters@devonhomes.co.nz http://www.devonhomes.co.nz

These plans are the copyright of REUTERS CONSTRUCTIONS LTD

WDC APPROVED

COMPUTER FREEHOLD REGISTER
UNDER LAND TRANSFER ACT 1952

Search Copy

R.W. Muir
Registrar-General
of Land

Identifier	**773126**
Land Registration District	**Wellington**
Date Issued	09 February 2017

Prior References
761973

Estate	Fee Simple
Area	1.4077 hectares more or less
Legal Description	Lot 1, 3, 6, 8-9, 11-20, 24, 26, 28-34 Deposited Plan 500432

Proprietors
Double Dutch Limited

Interests

489872 Notice imposing Building Line Restriction - 22.3.1961 at 2:43 pm (Affects Part Lot 1 DP 500432 formerly Lot 9 DP 22876)

Superseded

Subject to water drainage rights over part Lot 3 DP 500432 marked A, over part Lot 6 DP 500432 marked D, over part Lot 8 DP 500432 marked F and over part Lot 9 DP 500432 marked G all on DP 500432 created by Transfer 498106 - 19.6.1961 at 12:02 pm

Appurtenant hereto are water drainage rights created by Transfer 498106 - 19.6.1961 at 12:02 pm (Affects Part Lot 1 DP 500432, Part Lot 3 DP 500432 and and Part Lot 12 DP 500432 formerly Lot 9 DP 22876 and affects Lot 6,8-9, 11 DP 500432)

The easements created by Transfer 498106 are subject to Section 9A (3) (a) Land Subdivision in Counties Act 1946

Subject to Part IVA Conservation Act 1987

Subject to Section 11 Crown Minerals Act 1991, excluding the coal and other minerals which remain in cancelled Certificates of Title WN958/74, WN185/268, WN432/154 and WN432/155.

10635291.4 Consent Notice pursuant to Section 221 Resource Management Act 1991 - 2.12.2016 at 4:34 pm

Land Covenant in Easement Instrument 10635291.5 - 2.12.2016 at 4:34 pm

Subject to a right (in gross) to convey electricity over part Lot 14 DP 500432 marked N, over part Lot 15 DP 500432 marked O, over part Lot 16 DP 500432 marked P, over part Lot 17 DP 500432 marked Q, over part Lot 18 DP 500432 marked R, over part Lot 19 DP 500432 marked S, over part Lot 20 DP 500432 marked T, over part Lot 24 DP 500432 marked W and over Lot 26 DP 500432 marked Y all on DP 500432 in favour of Powerco Limited created by Easement Instrument 10635291.6 - 2.12.2016 at 4:34 pm

The easements created by Easement Instrument 10635291.6 are subject to Section 243 (a) Resource Management Act 1991

Subject to a right (in gross) to drain sewage and water and a right (in gross) to convey water over part Lot 12 DP 500432 marked L and a right (in gross) to drain stormwater over part Lot 34 DP 500432 marked AA and over part Lot 18 DP 500432 marked marked AB all on DP 500432 in favour of Whanganui District Council created by Easement Instrument 10635291.7 - 2.12.2016 at 4:34 pm

The easements created by Easement Instrument 10635291.7 are subject to Section 243 (a) Resource Management Act 1991

Subject to a right to drain water over part Lot 9 DP 500432 marked H and over part Lot 11 DP 500432 marked L and a right to drain water and sewage over part Lot 14 DP 500432 marked M, over part Lot 17 DP 500432 marked

WDC APPROVED

Identifier **773126**

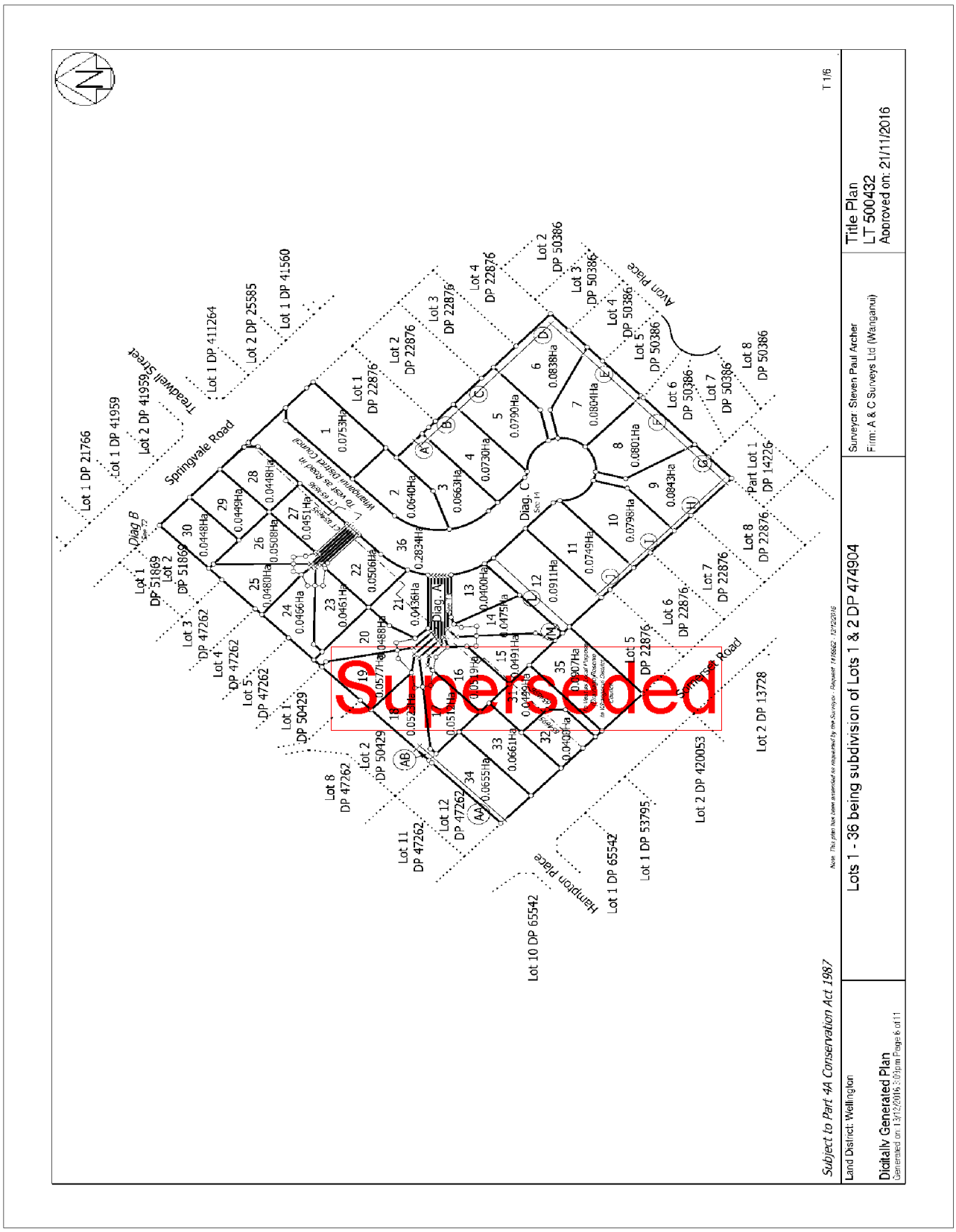

WDC APPROVED

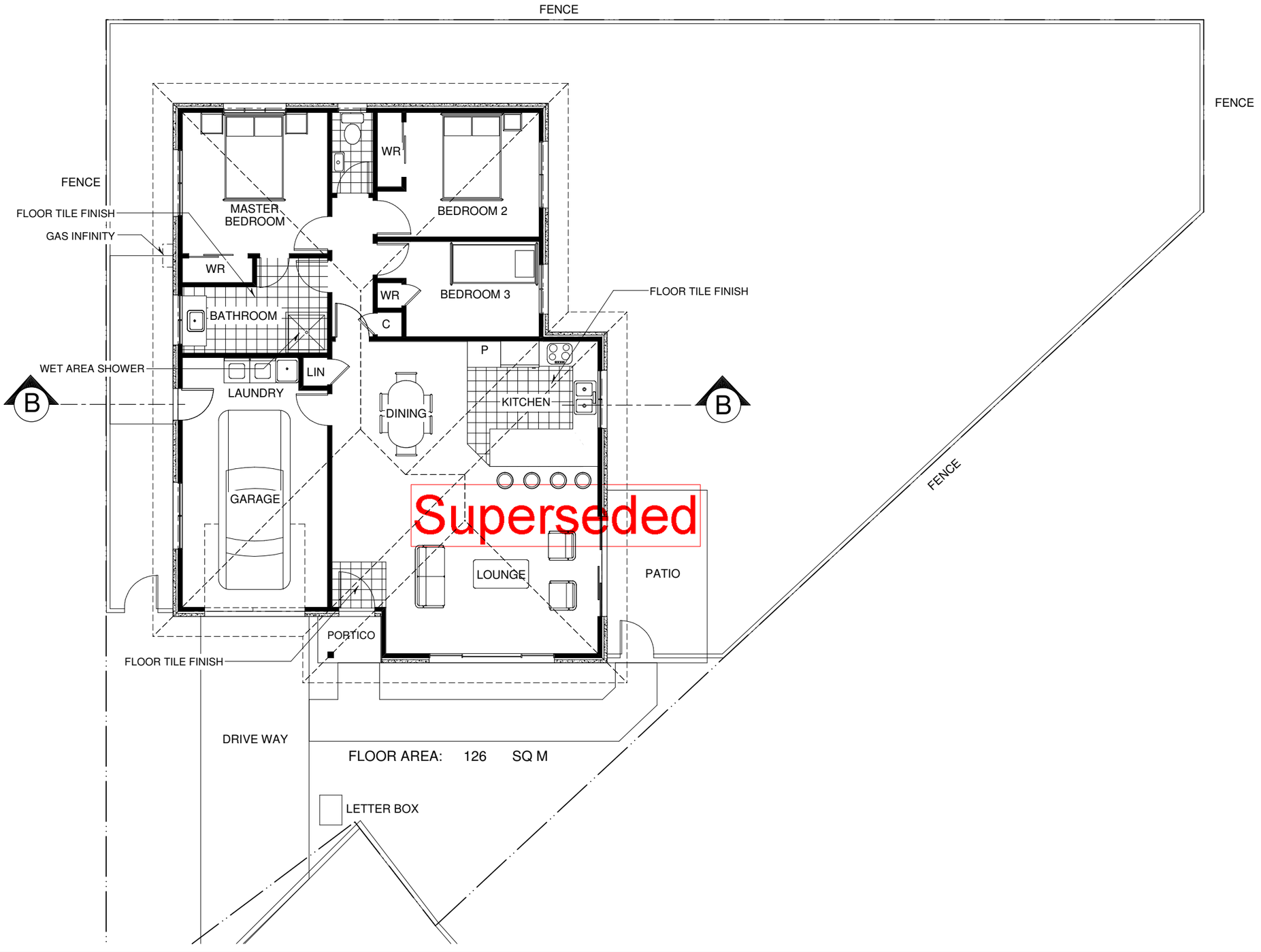

PROPOSED RESIDENCE FOR

MR STEVE & MRS GAY ROBERTSON

10 LEICESTER PLACE, SPRINGVALE, WANGANUI

FLOOR PLAN

Scale:	Sheet No.
1:100	2
Date: 23 FEB 2017	Revision
Job No.	

No	Dates	Amendments
a	6 MAR 2017	REVISED LOCATION PLAN
b		
c		
d		
e		
f		

Notes:-

DEVON HOMES

REUTERS CONSTRUCTION LTD

165 A, GREAT NORTH ROAD, WANGANUI NEW ZEALAND

PHONE: +64-6-3452393 FA X: +64-6-3452165

EMAIL: reuters@devonhomes.co.nz http://www.devonhomes.co.nz

These plans are the copyright of REUTERS CONSTRUCTIONS LTD

WDC APPROVED

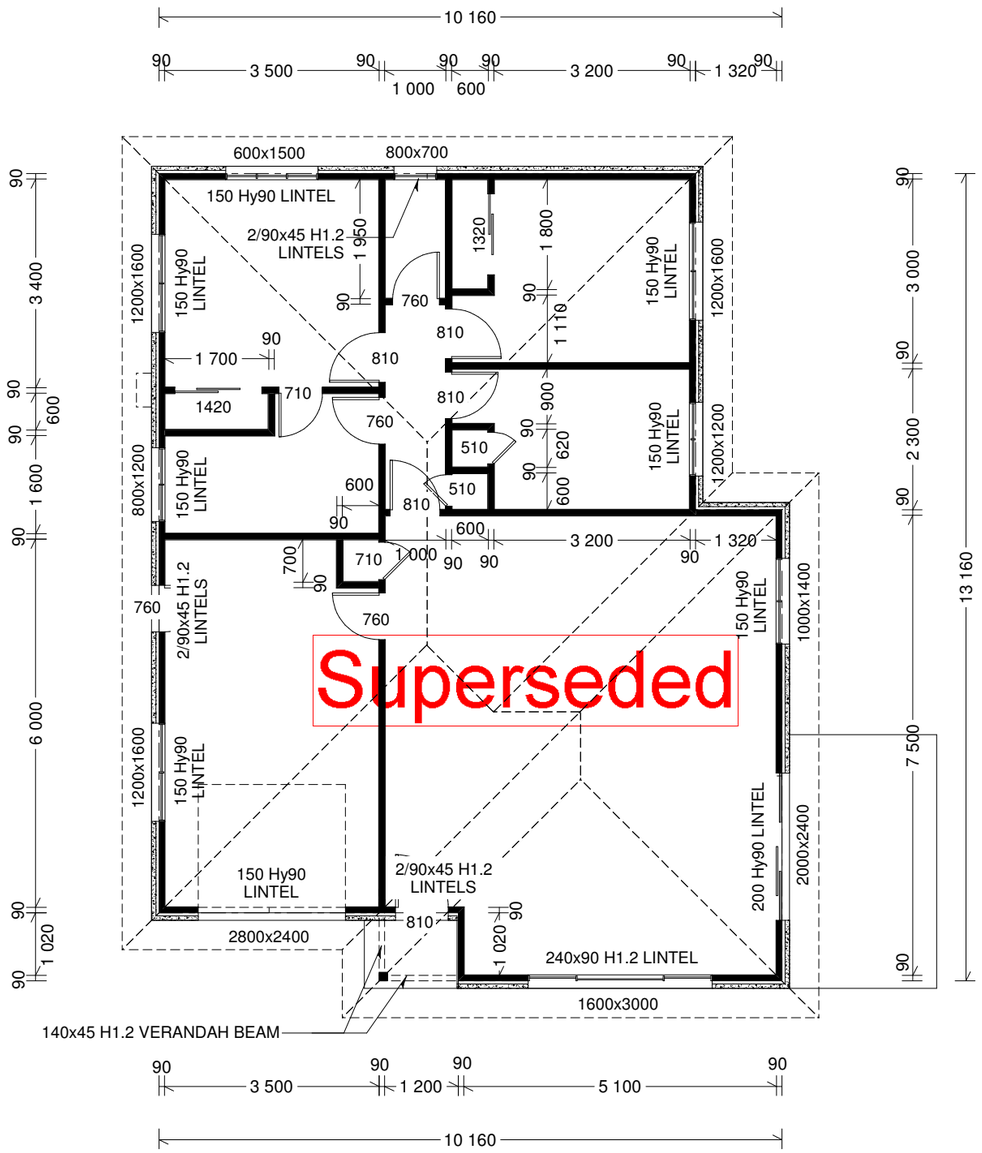

PROPOSED RESIDENCE FOR

MR STEVE & MRS GAY ROBERTSON

10 LEICESTER PLACE, SPRINGVALE, WANGANUI

SET-OUT PLAN

Scale:	Sheet No.
1:100	4
Date: 23 FEB 2017	Revision
Job No.	

No	Dates	Amendments
a	6 MAR 2017	REVISED LOCATION PLAN
b		
c		
d		
e		
f		

Notes:-

DEVON HOMES

REUTERS CONSTRUCTION LTD

165 A, GREAT NORTH ROAD, WANGANUI NEW ZEALAND

PHONE: +64-6-3452393 FA X: +64-6-3452165

EMAIL: reuters@devonhomes.co.nz http://www.devonhomes.co.nz

These plans are the copyright of REUTERS CONSTRUCTIONS LTD

WDC APPROVED

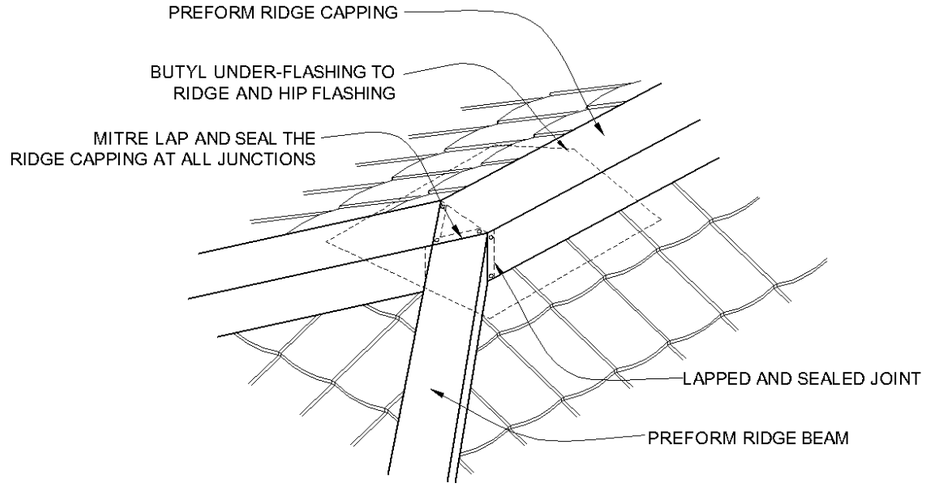

RIDGE TO HIP DETAIL

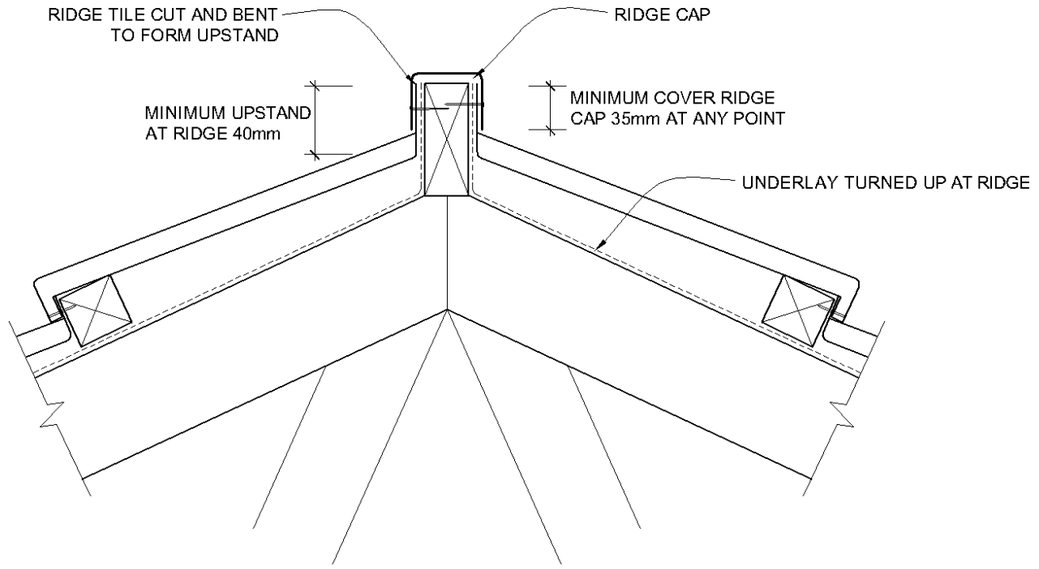

RIDGE / HIP FLASHING DETAIL

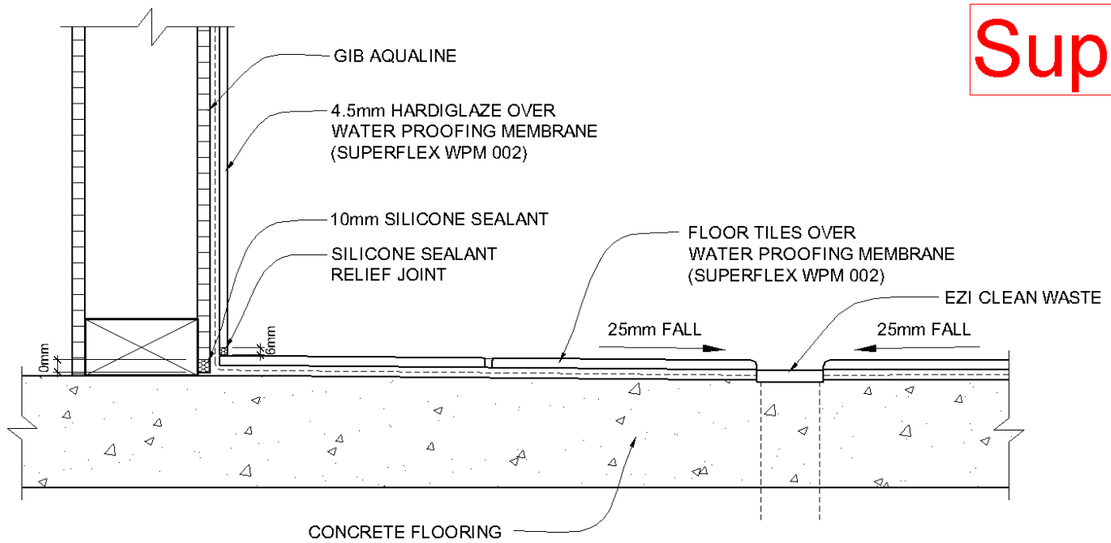

WET AREA SHOWER DETAIL

Superseded

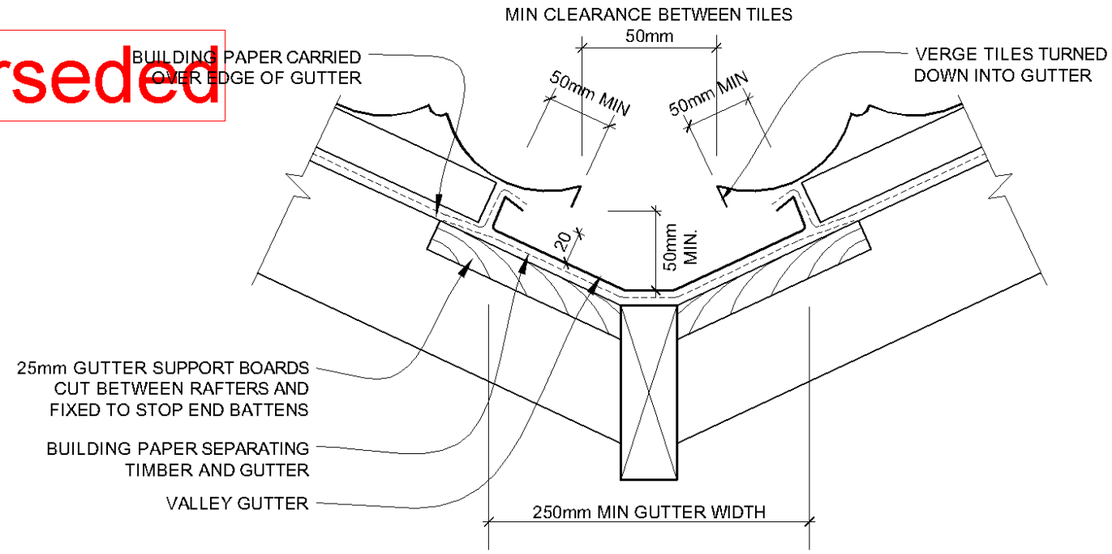

VALLEY GUTTER DETAIL

PROPOSED RESIDENCE FOR

MR STEVE & MRS GAY ROBERTSON

10 LEICESTER PLACE, SPRINGVALE, WANGANUI

TYPICAL DETAILS

Scale:	Sheet No.
NTS	12
Date: 23 FEB 2017	Revision
Job No.	

No	Dates	Amendments
a	6 MAR 2017	REVISED LOCATION PLAN
b		
c		
d		
e		
f		

Notes:-

DEVON HOMES

REUTERS CONSTRUCTION LTD

165 A, GREAT NORTH ROAD, WANGANUI NEW ZEALAND

PHONE: +64-6-3452393 FA X: +64-6-3452165

EMAIL: reuters@devonhomes.co.nz http://www.devonhomes.co.nz

These plans are the copyright of REUTERS CONSTRUCTIONS LTD

WDC APPROVED

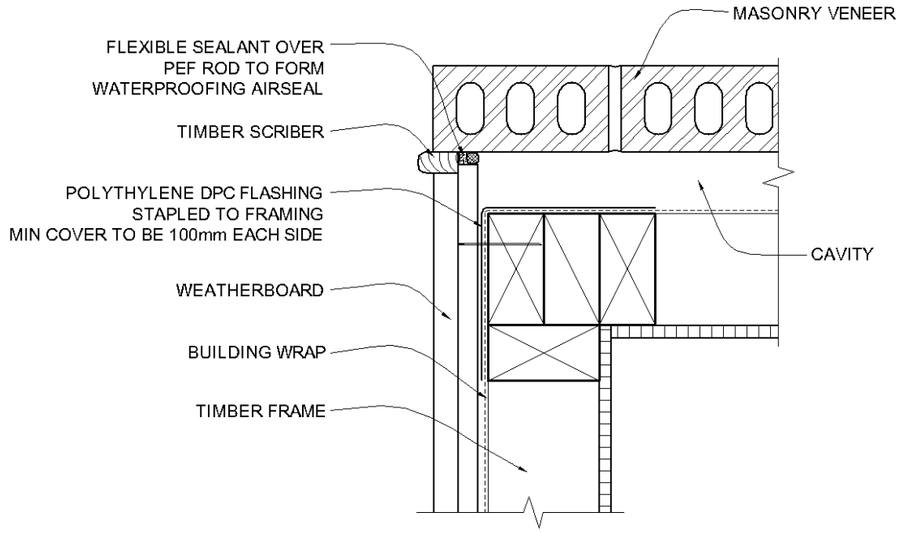

MASONRY VENEER TO WEATHERBOARD CORNER DETAIL

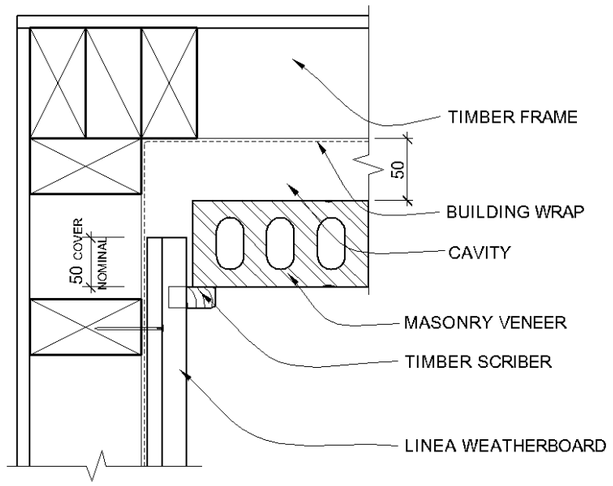

MASONRY VENEER TO WEATHERBOARDSCORNER DETAILS

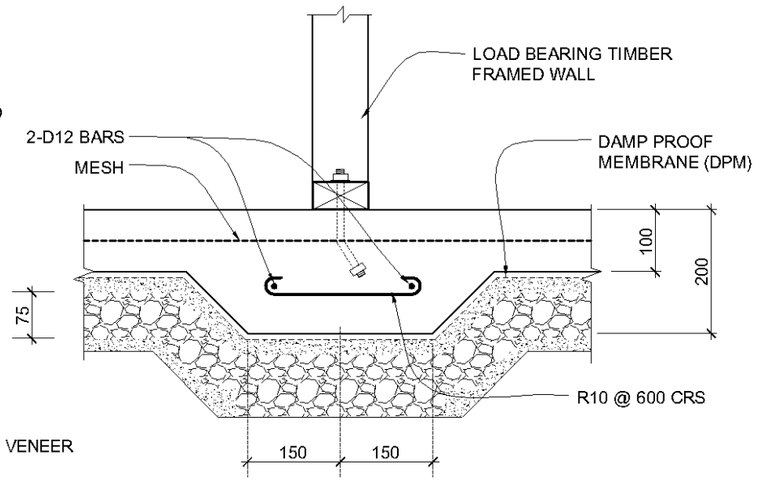

FLOOR THICKENING DETAIL

Superseded

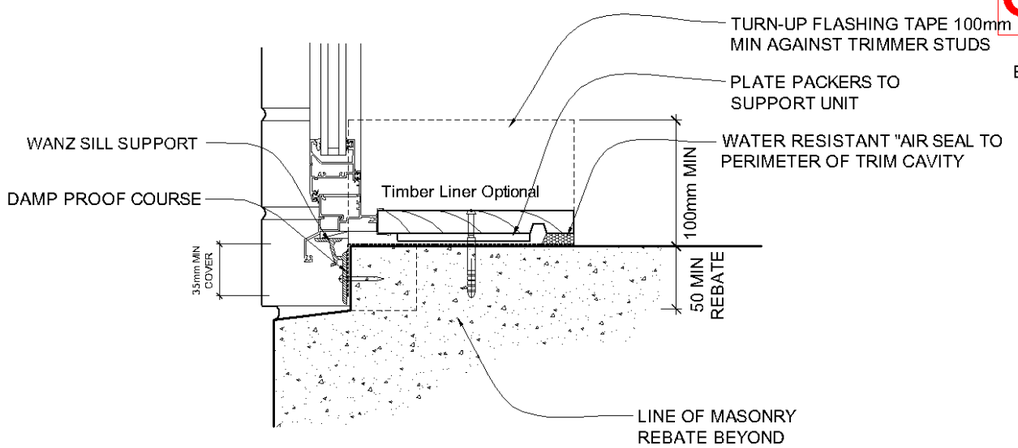

SILL THRESHOLD FLASHING DETAIL

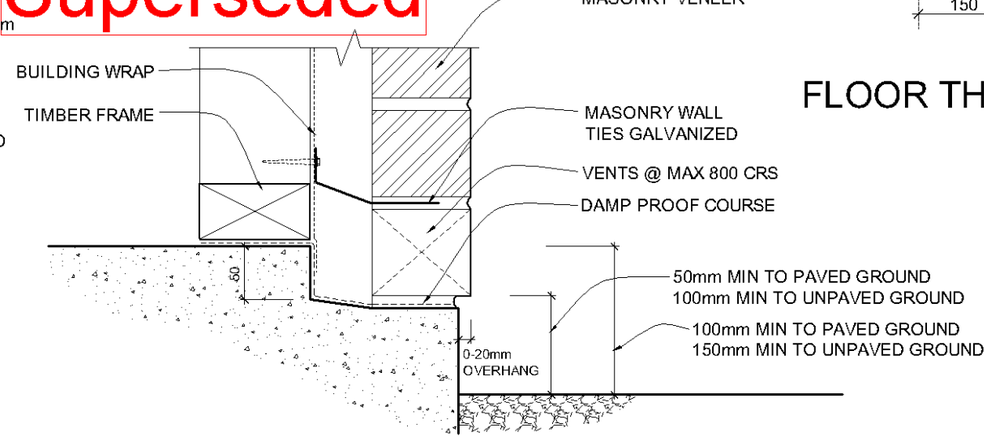

MASONRY VENEER FLOOR REBATE DETAIL

PROPOSED RESIDENCE FOR

MR STEVE & MRS GAY ROBERTSON

10 LEICESTER PLACE, SPRINGVALE, WANGANUI

TYPICAL DETAILS

Scale:	Sheet No.
NTS	13
Date: 23 FEB 2017	Revision
Job No.	

No	Dates	Amendments
a	6 MAR 2017	REVISED LOCATION PLAN
b		
c		
d		
e		
f		

Notes:-

DEVON HOMES

REUTERS CONSTRUCTION LTD

165 A, GREAT NORTH ROAD, WANGANUI NEW ZEALAND

PHONE: +64-6-3452393 FA X: +64-6-3452165

EMAIL: reuters@devonhomes.co.nz http://www.devonhomes.co.nz

These plans are the copyright of REUTERS CONSTRUCTIONS LTD

WDC APPROVED

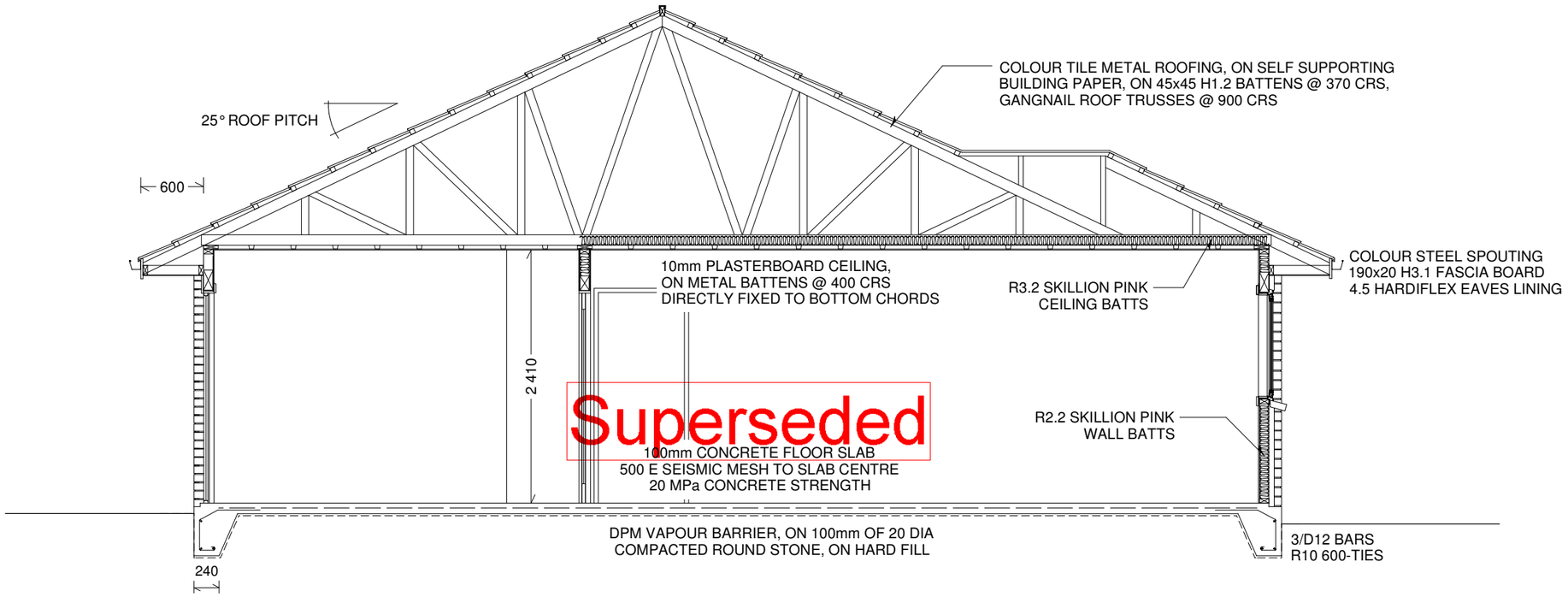

SECTION - B

TIMBER GRADES: ALL TIMBER TO BE MSG8, UNLESS SPECIFIED

2.40 METRES STUDS HEIGHT: 90x45 H1.2 FRAMING STUDS @ 600 CRS

PROPOSED RESIDENCE FOR

MR STEVE & MRS GAY ROBERTSON

10 LEICESTER PLACE, SPRINGVALE, WANGANUI

SECTION

Scale:	Sheet No.
1:50	5
Date: 23 FEB 2017	Revision
Job No.	

No	Dates	Amendments
a	6 MAR 2017	REVISED LOCATION PLAN
b		
c		
d		
e		
f		

Notes:-

DEVON HOMES

REUTERS CONSTRUCTION LTD

165 A, GREAT NORTH ROAD, WANGANUI NEW ZEALAND

PHONE: +64-6-3452393 FA X: +64-6-3452165

EMAIL: reuters@devonhomes.co.nz http://www.devonhomes.co.nz

These plans are the copyright of REUTERS CONSTRUCTIONS LTD

WDC APPROVED

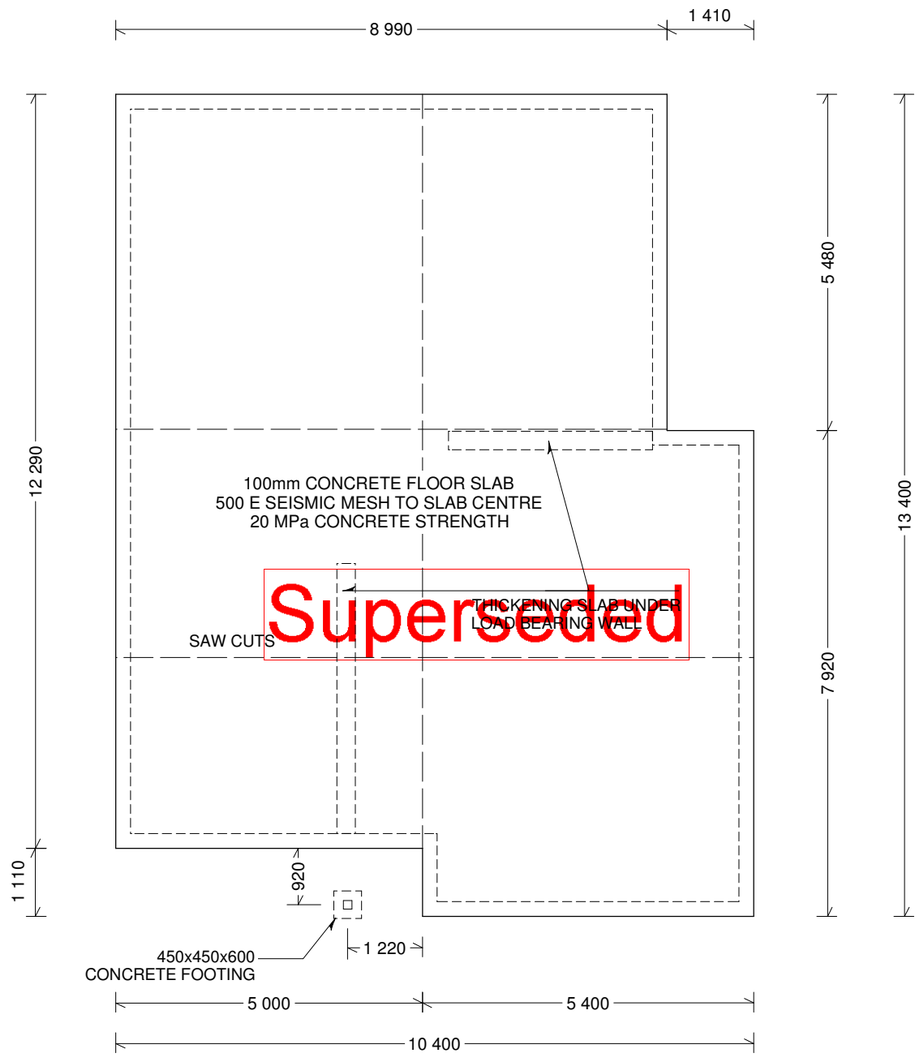

Superseded

PROPOSED RESIDENCE FOR

MR STEVE & MRS GAY ROBERTSON

10 LEICESTER PLACE, SPRINGVALE, WANGANUI

FOUNDATION PLAN

Scale:	Sheet No.
1:100	6
Date: 23 FEB 2017	Revision
Job No.	

No	Dates	Amendments
a	6 MAR 2017	REVISED LOCATION PLAN
b		
c		
d		
e		
f		

Notes:-

DEVON HOMES
REUTERS CONSTRUCTION LTD
165 A, GREAT NORTH ROAD, WANGANUI NEW ZEALAND
PHONE: +64-6-3452393 FA X: +64-6-3452165
EMAIL: reuters@devonhomes.co.nz http://www.devonhomes.co.nz
These plans are the copyright of REUTERS CONSTRUCTIONS LTD

WDC APPROVED

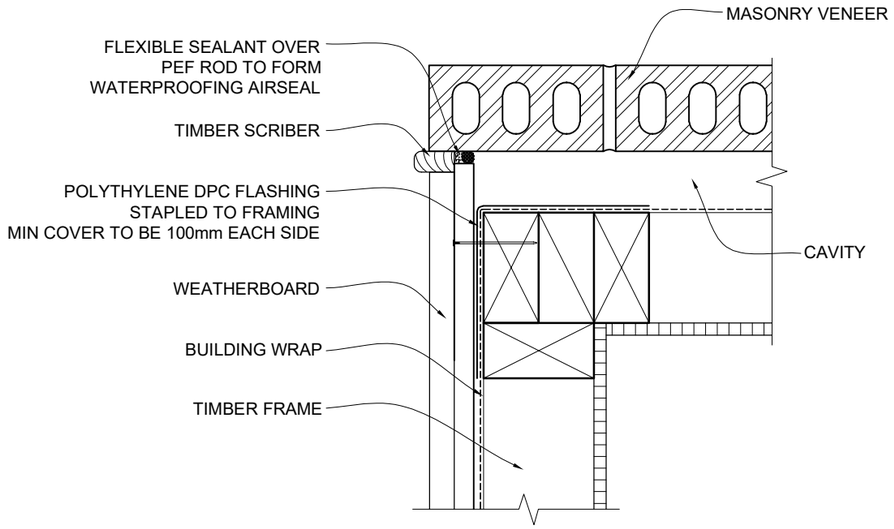

MASONRY VENEER TO WEATHERBOARD CORNER DETAIL

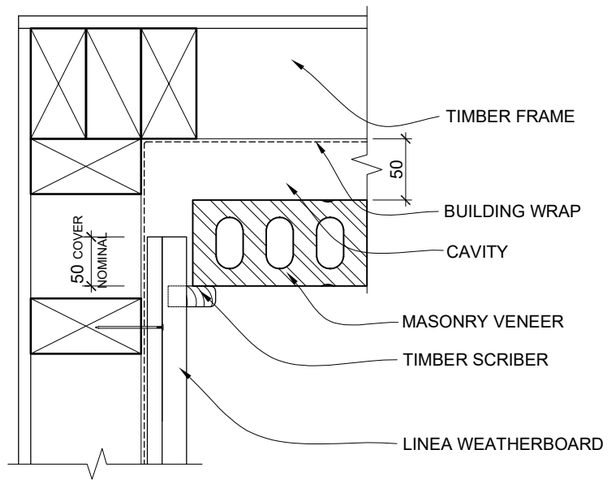

MASONRY VENEER TO WEATHERBOARDSCORNER DETAILS

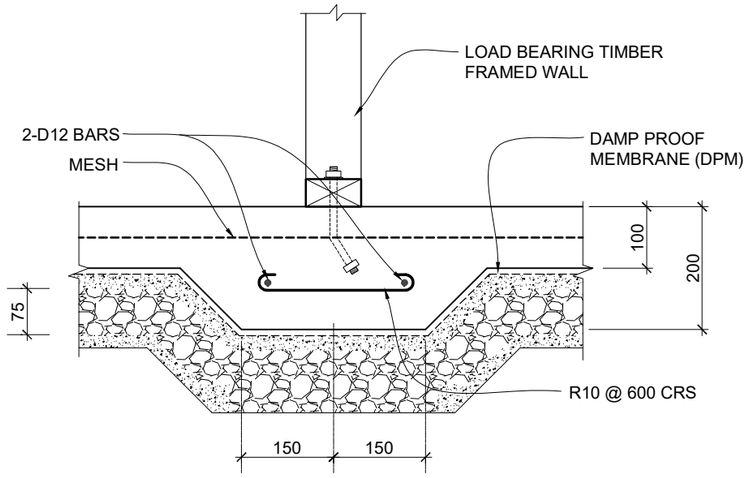

FLOOR THICKENING DETAIL

Superseded

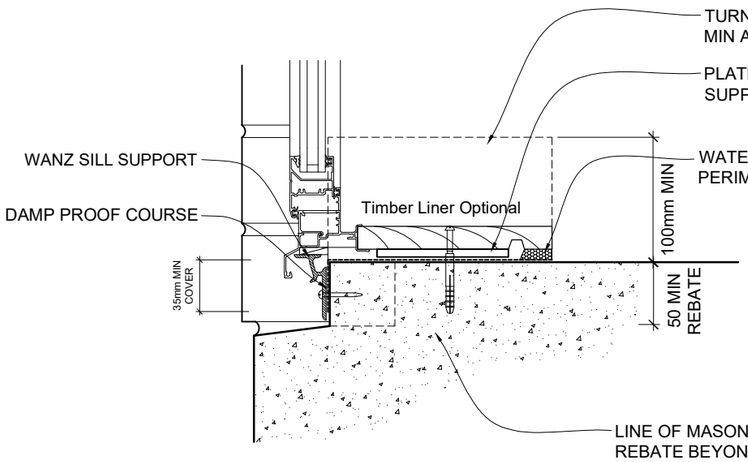

SILL THRESHOLD FLASHING DETAIL

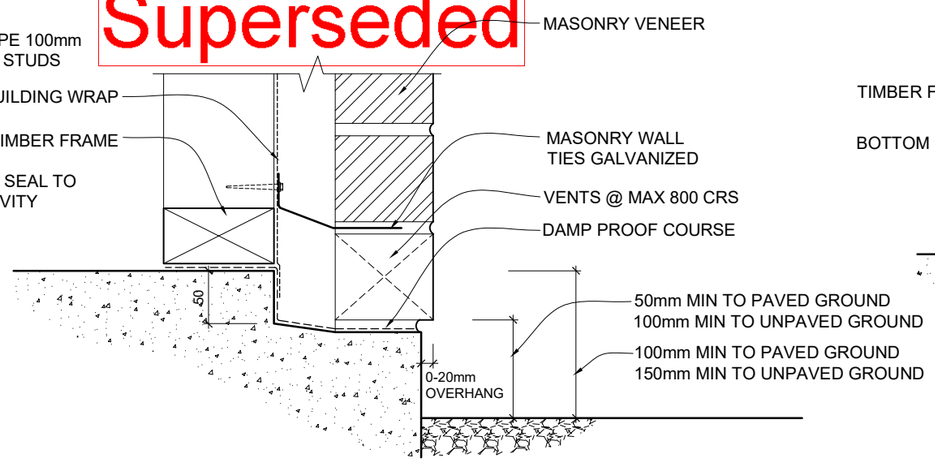

MASONRY VENEER FLOOR REBATE DETAIL

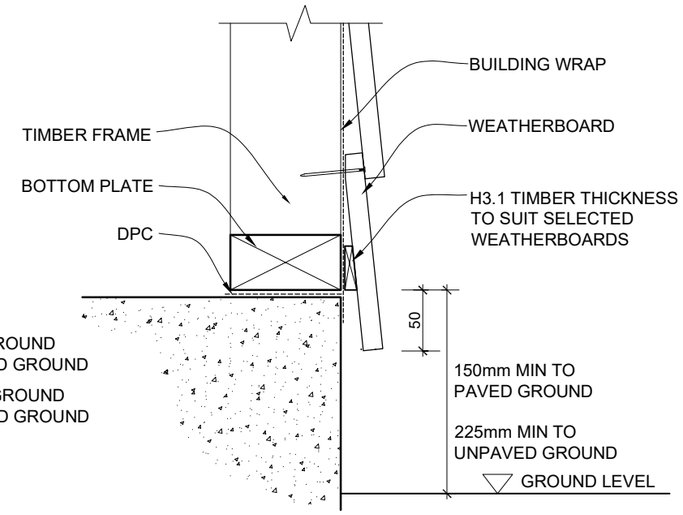

GROUND CLEARANCE WEATHERBOARDS PROFILE

PROPOSED RESIDENCE FOR

MR STEVE & MRS GAY ROBERTSON

10 LEICESTER PLACE, SPRINGVALE, WANGANUI

TYPICAL DETAILS

Scale:	Sheet No.
NTS	13
Date: 2 MAR 2017	Revision
Job No.	

No	Dates	Amendments
a	31 MAR 2017	COUNCIL REQUIREMENTS
b		
c		
d		
e		
f		

Notes:-

DEVON HOMES
REUTERS CONSTRUCTION LTD
165 A, GREAT NORTH ROAD, WANGANUI NEW ZEALAND
PHONE: +64-6-3452393 FA X: +64-6-3452165
EMAIL: reuters@devonhomes.co.nz http://www.devonhomes.co.nz

These plans are the copyright of REUTERS CONSTRUCTIONS LTD

Received Tuesday, 4 April 2017

WDC APPROVED

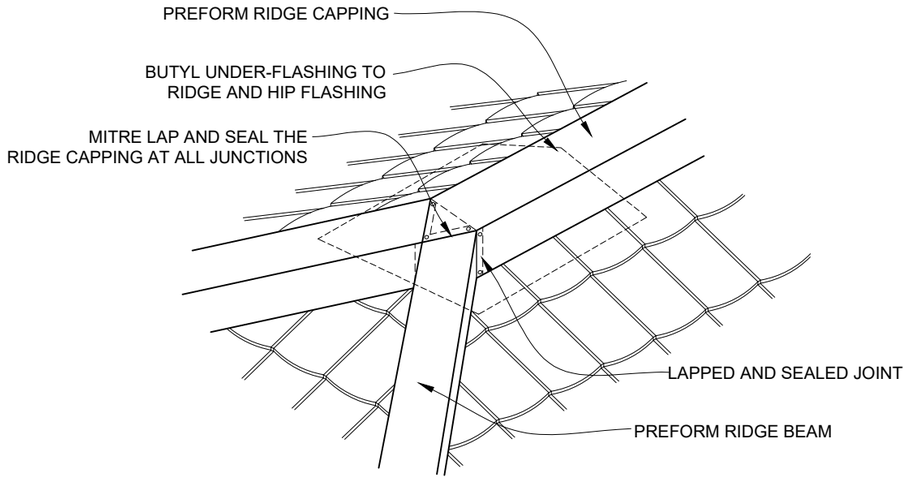

RIDGE TO HIP DETAIL

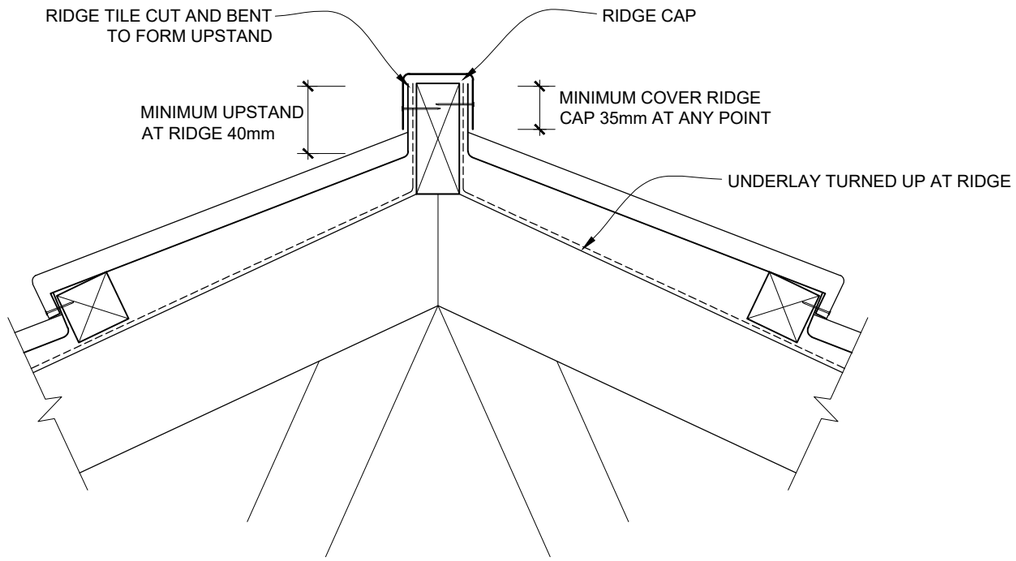

RIDGE / HIP FLASHING DETAIL

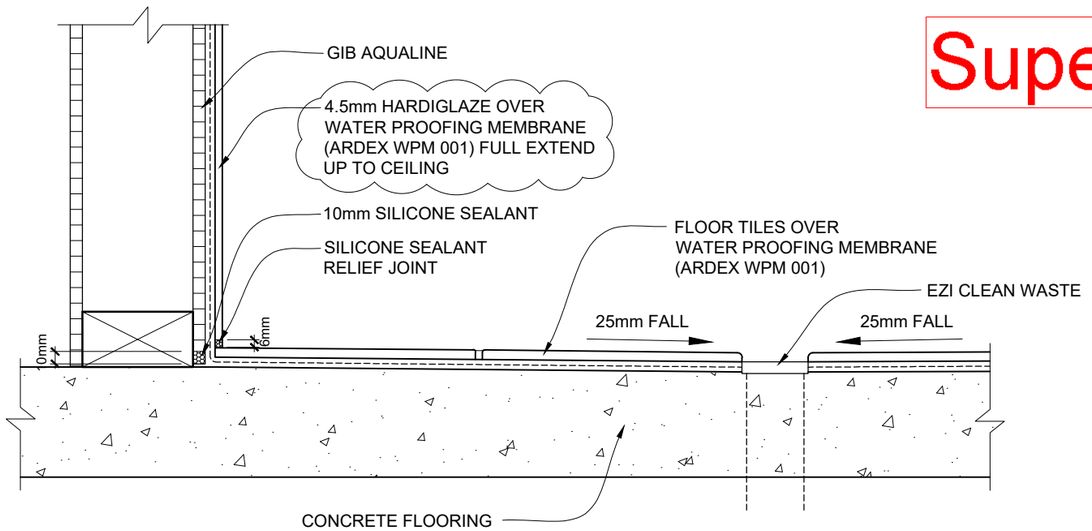

WET AREA SHOWER DETAIL

Superseded

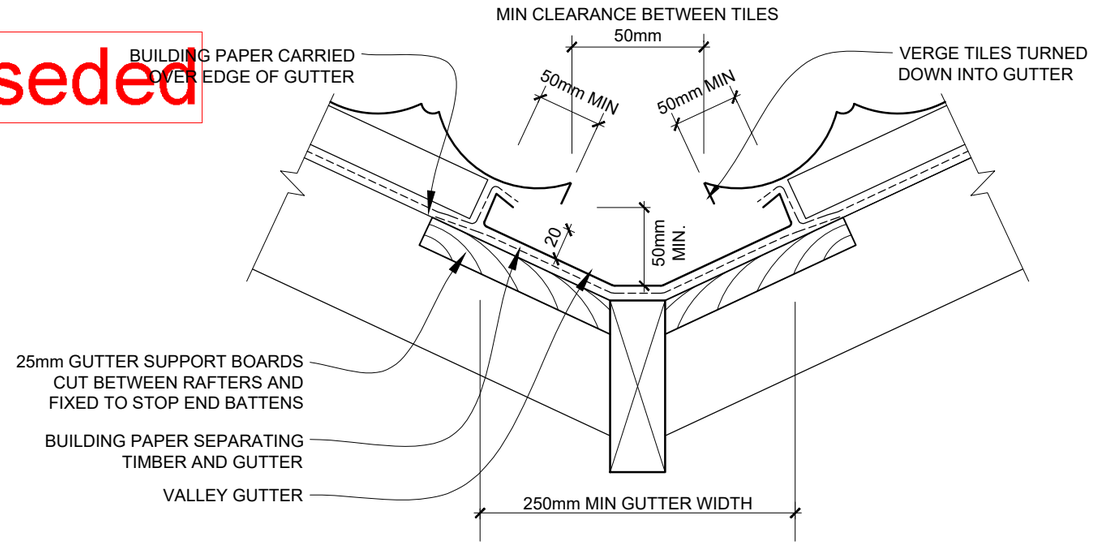

VALLEY GUTTER DETAIL

PROPOSED RESIDENCE FOR

MR STEVE & MRS GAY ROBERTSON

10 LEICESTER PLACE, SPRINGVALE, WANGANUI

TYPICAL DETAILS

Scale:	Sheet No.
NTS	12
Date: 2 MAR 2017	Revision
Job No.	

No	Dates	Amendments
a	31 MAR 2017	COUNCIL REQUIREMENTS
b		
c		
d		
e		
f		

Notes:-

DEVON HOMES
REUTERS CONSTRUCTION LTD
165 A, GREAT NORTH ROAD, WANGANUI NEW ZEALAND
PHONE: +64-6-3452393 FA X: +64-6-3452165
EMAIL: reuters@devonhomes.co.nz http://www.devonhomes.co.nz

These plans are the copyright of REUTERS CONSTRUCTIONS LTD

Received Tuesday, 4 April 2017

WDC APPROVED