SCANNED

1729/7

WATER APPLICATION 080120

Application No	080120	Mail No	08Jun1332
Valuation No	2143011114	Units	0.00
Property No	1729/7	Location	Amberley
Name	Thomson & Baxter		
Address	7 Swindon Lane, Amberley		
Mail Address	c/- M Flutey, PO Box 421, Rangiora		
Scheme	Amberley Township		
Application Type	Connection to Township High Pressure		
Serviceman	Alaster Wilson	Paid on	10-Jun-08
Fee	$450.00	Capital Contribution	no
Rec'd Application	16-Jun-08	Approval Date	16-Jun-08
To Engineer on	16-Jun-08	Connected on	24/9/08
To Serviceman o	16-Jun-08	Rates Updated on	2/10/08
Updated Plans on	8/10/08	Tank No	
Lot Number		DP Number	
Application Withdrawn			
Last Pump Name			
Drawn on Wrtank Provisional Layer in Mapinfo			
Comments	paid on BC080237 Inv 72769		

ENTERED 8/10/08

POSTED -2 OCT 2008

~~OSJON~~

RECEIVED
13 JUN 2008
Hurunui District Council

Appl. No. 080120
Mail Ref. 05SON1332.1f
Pty File No. 1729/7
Val. Roll No. 21430111114

Application form for

DISTRICT ON DEMAND WATER SUPPLY

- Thomson & Baxter.

I, Michael Flutey (name of owner)

of P.O. Box 421 Rangiora (postal address)

hereby make application for connection to the: (AMBERLEY) CULVERDEN
HANMER SPRINGS HAWARDEN LEITHFIELD BEACH WAIAU
WAIKARI WAIPARA On - Demand Water Supply. (circle the one that applies)

Address of Property 7 Swindon Lane, Amberley.

Legal Description Lot 6 D.P. 79189

Contact Phone Number. BUS 03130319 AH

I hereby submit the connection fee (including GST) of:

$450.00 for a domestic connection (20mm)

The connection fee provides for a pipe installation from the main line to the property (up to a distance of 4 metres) a toby box, valve and water meter, and foot path reinstatement if required. Council advises applicants to install their own gate valve on their side of the water meter. (Section D 11.3 HDC Water Supply Network Contract Conditions for Consumers November 1999 Version.1.0) For distances over 4 metres a Works Order Form will be required with this application for Council staff to install the additional water lines. These lines may however be installed by the applicant using Council approved pipe & fittings.

NB: if the lateral to which this application applies is not within private property and excavation of the Road Reserve is required then a Road Opening Permit must be applied for.

Applicants Signature M.D. Flutey Date 11.6.08.

For Office Use:

Receipt Number		Date	10/6/08
Connection made by	John	Date	24-9-08
Meter Number	~~SA~~ CO7AV077045.		
Meter Location	LHS section by Light.		
Meter Reading	0000 071		
Rated by		Date	
Drawn on Plans by		Date	
Original filed by		Date	

B/C # 080237.

INV 72769.

Plan ONN

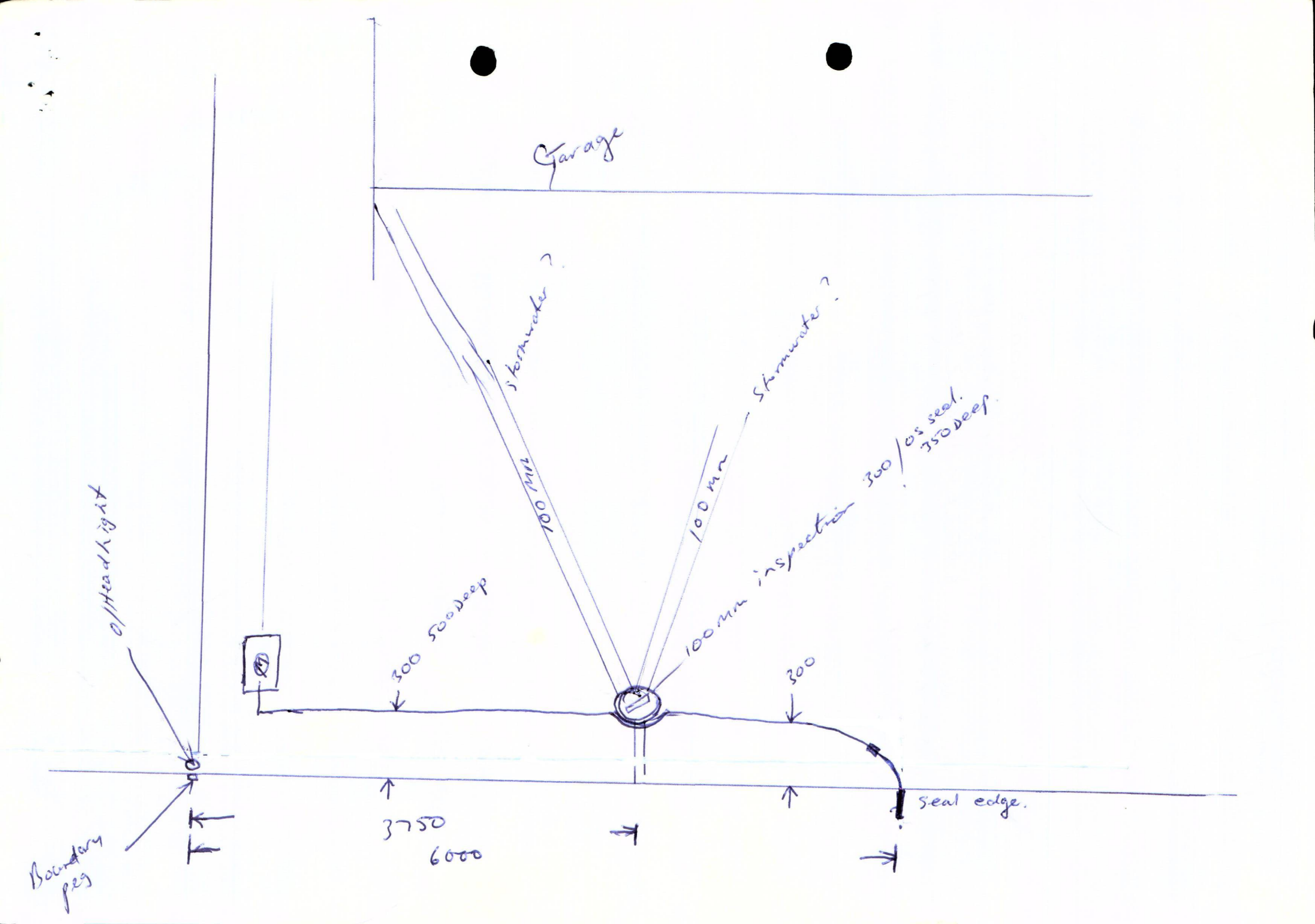
Garage
stormwater ?
100 mm
stormwater ?
100 mm
100 mm inspection 300 / OS seal. 350 Deep.
300 500 Deep
300
o/Head light
Boundary peg
3750
6000
seal edge.

SCANNED

SEWER APPLICATION

080121

Application No	080121	Mail No	08Jun1332
Valuation No	2143011114	Property No	1729/7
Name	Thomson & Baxter		
Sewerage Scheme	Amberley and Districts		
Application Type	Connection to Township Sewer		
Last Pump Name	Amberley Domain		
Fee	$50.00	Paid On	10-Jun-08
Drainlayer		Connected On	19/9/08
Rec'd application on	13-Jun-08	Capital Contributio	no
Updated Plans On		Rates Updated On	
Location			
Comments	paid on BC080237 Inv 72769		

Sewer Connection

Building Department

HURUNUI
District Council

Project Details

Applicant: Thomas + Baxter

Address of Proposed Work: 7 Swindon Lane
Amberley 7410

BC Number:	080237
Application Number:	
Approved:	(YES) NO
Valuation No:	2143011114

Sketch of connection:

ENTERED 19/10/09

Connection Details

Contractor: Total Drainage - Excavation

Date Connected: 19/9/2008

POSTED 18 NOV 2008

Form to Lisa when Sewer Connection inspected

HURUNUI DISTRICT COUNCIL

Application form for connection to

DISTRICT SEWERAGE SCHEME

Appl. No. 080121

Mail Ref:

Pty File No. 1729/7

Val. Roll No. 2143011114

I, Michael Flutey (agent) (name of ~~owner~~)

of P.O. Box 421 Rangiora (postal address)

Make application for connection to the: (AMBERLEY) AMBERLEY BEACH CHEVIOT GRETA VALLEY HANMER SPRINGS HAWARDEN LEITHFIELD LEITHFIELD BEACH MOTUNAU BEACH WAIKARI Sewerage Scheme. (circle the one that applies)

Address of Property 7 Swindon Lane Amberley.

Legal Description Lot 6 D.P. 79189

Contact Phone No. BUS 033130319 AH

I hereby submit the connection fee $50.00 (including GST)

Generally each property has a lateral from the sewer main to the boundary provided it was included in the original scheme. Most subdivisions since that time have also had the property connected to as far as the boundary from the main sewer line. However in the instance where this is not provided e.g. Cheviot Township or where a different connection point is chosen then the full cost of connection to the sewer main will be met by the applicant. This work will be done by a registered drain layer to the satisfaction of the District Drainage Inspector to CDB DS 78. it will generally be done when the remainder of the sewer line on the property is installed.

NB: if the lateral to which this application applies is not within private property and excavation of the road reserve is required then a "road opening permit along with a traffic management plan' must be applied for.

Applicants Signature M.J. Flutey Date 11.6.08

For Office Use:

Receipt Number		Date	
Connection made by		Date	
Rated by		Date	
Drawn on Plans by		Date	
Original filed by		Date	

~~OSJON~~

RECEIVED
13 JUN 2008
Hurunui District Council

Application form for

DISTRICT ON DEMAND WATER SUPPLY

Appl. No. 080120
Mail Ref: 08JON1332.1f
Pty File No. 1729/7
Val. Roll No. 2143011114

I, Michael Flutey - Thomson & Baxter. (name of owner)

of P.O. Box 421 Rangiora. (postal address)

hereby make application for connection to the: AMBERLEY CULVERDEN HANMER SPRINGS HAWARDEN LEITHFIELD BEACH WAIAU WAIKARI WAIPARA On - Demand Water Supply. (circle the one that applies)

Address of Property 7 Swindon Lane, Amberley.

Legal Description Lot 6 D.P. 79189

Contact Phone Number. BUS 03130319. AH.....

I hereby submit the connection fee (including GST) of:

$450.00 for a domestic connection (20mm)

The connection fee provides for a pipe installation from the main line to the property (up to a distance of 4 metres) a toby box, valve and water meter, and foot path reinstatement if required. Council advises applicants to install their own gate valve on their side of the water meter. (Section D 11.3 HDC Water Supply Network Contract Conditions for Consumers November 1999 Version.1.0) For distances over 4 metres a Works Order Form will be required with this application for Council staff to install the additional water lines. These lines may however be installed by the applicant using Council approved pipe & fittings.

NB: if the lateral to which this application applies is not within private property and excavation of the Road Reserve is required then a Road Opening Permit must be applied for.

Applicants Signature M.J. Flutey Date 11.6.08.

For Office Use:

Receipt Number		Date	
Connection made by		Date	
Meter Number			
Meter Location			
Meter Reading			
Rated by		Date	
Drawn on Plans by		Date	
Original filed by		Date	

B/C # 080237.
INV 72769.


ASBUILT FILED
UNDER 1729 / A
14
12
11
15
14
47
45
41
4
7
10
6
3
2
11
SWINDON LN
Stormwater
Sump
15
16
11
14
12
9
10
7
8
5
6
4
3
2
11
25
41

PROPERTY
COPY

Lisa Ree

13 June 2008

08Jun1332

Thomson & Baxter
c/- Mr Flutey
PO Box 421
RANGIORA

Dear Mr Flutey

WATER APPLICATION NUMBER 080120 & 08121

Your application to connect to the **Amberley Township** Water has been approved. This connection will be supplied in accordance with the Hurunui District Council Water Supply By-Law (1999) and the Hurunui District Council Wastewater Networks By-Law (2001).

A minimum supply charge will be charged on your rates plus a usage charge per cubic metre of water used.

Your application for connection to the township sewerage has been forwarded to the Building Department for their use when inspecting the installation.

If you have any questions please do not hesitate to call.

Yours sincerely

Lisa Ree
Customer Services Officer - Utilities

757152

As built's #7 Swindon Ln

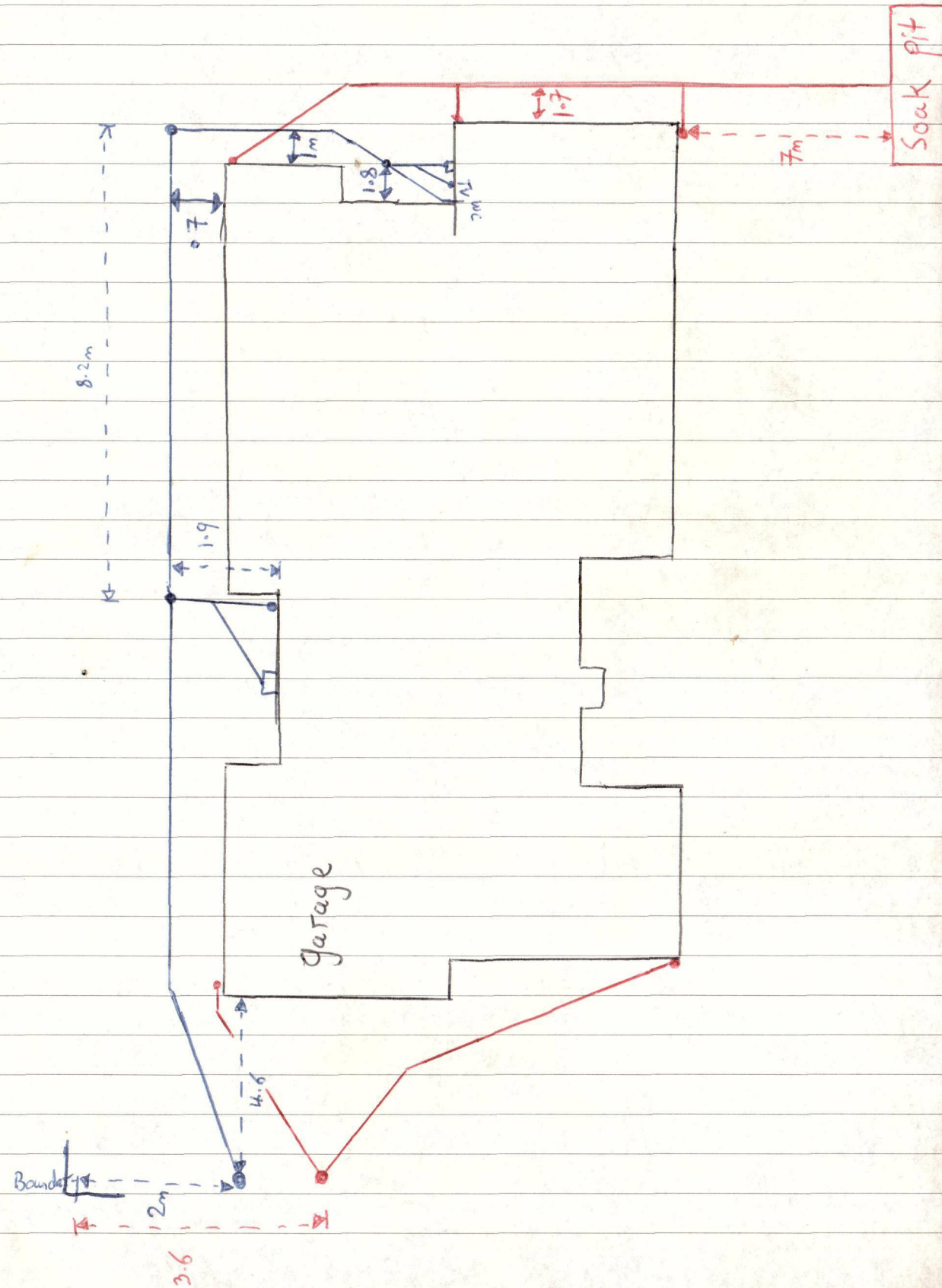

COLLINS A4/50 DL NCR

Code compliance certificate 080237

Section 95, Building Act 2004 (BAM 007)

THE BUILDING

Street address of building: 7 SWINDON LANE, AMBERLEY

Legal description of land where building is located: LOT 6 DP 79189 BLK VIII TEVIOTDALE SD

Valuation number: 2143011114

Current, lawfully established, use: SH

THE OWNER

Name of owner: Thomson Jonathan Sealy Neas & Baxter Hannah Jane

First point of contact for communications with the council/building consent authority:
Full Name: Mike Greer Homes North Canterbury

Mailing Address: P O Box 421, Rangiora

BUILDING WORK

Building consent number: 080237

Project: 3 bedroom dwelling with attached garage and Escea IB850 gas fire

Issued by: Hurunui District Council

CODE COMPLIANCE

The building consent authority named below is satisfied, on reasonable grounds, that —

(a) the building work complies with the building consent

Signature M. A. Greer Position Team leader Building Controls

On behalf of: Hurunui District Council Date: 17/11/08

BC Number 080237

Rapid Number 1729/7

Inspector's Name .....

HURUNUI District Council

CHECKLIST PROMPT
CCC – RESIDENTIAL & HABITABLE (BAM 006-R)

Item	Completed/Received
CCC request form BAM 006	Received
BC conditions Met	Completed
PS4 - Construction Review	N/A
Drainage Plan D. Sincock # 16594	Received
Electrical Certificate H. Brown # E 248614	Received
Gas Certification G. Smith # 01061	Received
Pressure Test Declaration C. Dick # 10554	Received
Exterior Cladding – Plaster Certification	N/A.
Potable Water supply sign off Council Supply Potable	Completed
Wet Areas – Tanking Certification	N/A.
Council Files	
Correct BC Application BAM 002 - 1/3/07 issue	Completed
Inspections Charged	x 8 invoice 7279
Inspections Completed	x 2
Fees owing 4 @ $90	$360
NCS updated	on issue
Correct Description Building Works New 3 Bedroom	Dwelling with Escape

Additional Comments: N/A - not applicable IBSSO Gas Fire and Attached Garage

Construction completed 21/10/08. with all necessary inspections completed by B.C.A.
B.C.A. satisfied construction meets NZBC.
OK to issue CCC once outstanding fees fully received.

Signature..... **Date**.....17/11/08.....

24/6

3/7

4/7

7/7

24/7

19/8

20/8 (12)

21/8

4/9

19/9

16/10

21/10

Mike Greer Homes North Canterbury
P O Box 421
Rangiora 7400

Customer No BC080237
Date 17/11/08

GST Reg No 53-915-477

Tax Invoice 74390

INSPECTIONS UNDERTAKEN OVER AND ABOVE THOSE CHARGED ON INVOICE 72769

Preclad	90.00	*
Concrete Inspections 1	180.00	*
Final inspection - dwelling	90.00	*

(* Incl GST $40.00)

Sub Total **$360.00**

Total incl GST **$360.00**

Mike Greer Homes North Canterbury

Customer No BC080237
Date 17/11/08
Invoice No 74390
Total Due $360.00

Hurunui District Council

Building Consent Inspection Entry

Sort by Done Date , New Note , New Note - Recurring , Multiple New Notes , More Detail , Print CCC , Enquiry , Search

No: 080237
Owner: J Thomas & H Baxter
Applicant: Mike Greer Homes North Canterbury
Project: 3 bedroom dwelling with attached garage and Escea IB850 gas
Location: 7 SWINDON LANE, AMBERLEY
Valuation No: 2143011114
Status: 17/11/08 Code Compliance Certificate issued : ALL

Inspection Notes

Chg Note	Type	Officer	Reqd date	Done date	Result	Insert	Notes
C1	CON Concrete pre pour	BC		24/06/08	OK	insert note	
C2	CON Concrete pre pour	SBO		3/07/08	Reinspection required	insert note	Slab
C3	CON Concrete pre pour	SBO		4/07/08	Reinspection required	insert note	re-inspection
C4	CON Concrete pre pour	SBO		7/07/08	OK	insert note	Re slab
C5	FRA Framing	BC		24/07/08	OK	insert note	
C6	PC Pre-clad and/or half height brick veneer	BC		19/08/08	OK	insert note	
C7	PC Pre-clad and/or half height brick veneer	BC		20/08/08	OK	insert note	
C8	PL Pre-line including plumbing	BC		21/08/08	OK	insert note	
C9	PST Pre-stop	BOI		4/09/08	OK	insert note	
C10	PLD Plumbing and/or drainage	SBOC		19/09/08	OK	insert note	
C11	FIN Final (major) - dwelling, commercial or similar	BOI		16/10/08	Reinspection required	insert note	
C12	FIN Final (major) - dwelling, commercial or similar	BOI		21/10/08	OK	insert note	

Sort by Done Date , New Note , New Note - Recurring , Multiple New Notes , More Detail , Print

8 inspections charged on invoice 72769

05-11-'08 09:49 FROM-Mike Greer Rangiora +64-3-3130321 T-094 P001/001 F-231

22-10-'08 14:13 FROM-Canterbury Gas Ltd +64-3-3574782 T-539 P001/001 F-780

Plumbers, Gasfitters and Drainlayers Board

GASFITTING CERTIFICATION CERTIFICATE

(Pursuant to the Gas Act 1992 and the Gas Regulations 1993 and amendments)

ENERGY WORK CERTIFICATE

(Pursuant to the Building Act 2004)

This certificate is not transferable

Level 9, 70 The Terrace
PO Box 10655, Wellington
Tel 04 494 2970, Fax 04 494 2975
www.pgdb.co.nz

Consumer: Baxter/Thomson
Installation Address: 7 Swindon Lane
Amberley
Canterbury 8251

Vehicle Registration:
Vessel Registration:

Certificate Number: **621109**
Gas Supplier: not known
Category: Domestic
Type (Regulation 24(1)): NEW
Gas Type: LPG
Certification Date: 22 Oct 2008

Test Results: 7 min Duration
7.00kPa test pressure
0kPa Loss / Gain
2.75kPa Working pressure

Other Testing:
Test Date: 13 Oct 2008

DESCRIPTION OF GASFITTING TO WHICH THIS CERTIFICATE APPLIES

Qty	Item Type	Item Location	Make/ Model	Input Rate	Flue Type	Flue Location	Vent Type	Vent Location
1	Decorative fires	Lounge	Escea IB850	43mjh				
1	Hob	Kitchen	Fisher & Paykel	38.90mjh				

I certify that:

1. I Certify that all appliances and fittings worked on by me or by persons working under my supervision are safe and that all work carried out was in accordance with all applicable requirements of the Gas Act 1992 and Gas Regulations 1993 as ammended.
2. I Certify that the Gasfitting to which this certificate applies does not make other parts of the installation unsafe or otherwise non-compliant with the Gas Act 1992 and Gas Regulations 1993 as ammended.
3. I Certify that the Gasfitting work to which this certificate applies does NOT include work on an appliance or fitting imported or manufactured for the consumers use.

Registered Gasfitter / Supervised by certifier
Registration No:
Name:

Registration No:
Name:

Certificate Owner
Registration No: 01061
Name: Smith, Greg J
Company:

Signed:
Certifier
Registration No: 01061
Name: Smith, Greg J

1729/7

HURUNUI District Council
P.O. Box 13
Amberley 7410
NEW ZEALAND
Telephone: (03) 314-8816
Fax: (03) 314-9181
EMAIL: info@hurunui.govt.nz

Rapid No:	Consent No:
1729 | 7	080237

11990

SITE INSPECTION REPORT

(BAM 214)

Name of Owner/Owner's Agent: Thomson & Baxter

Site Address: 7 Swindon Ln Amberley

Description of Consent: Dwelling with A/Garage

COMMENTS

All items raised at time of previous inspection have been attended to except for.

* Gas Certificate to be Forwarded ✓

JWC 13/11/08

Field Inspections Completed

Delete that which is not applicable.

INSTRUCTION TO OWNER/OWNER'S AGENT		INSPECTION TYPE
All work inspected is in accordance with the granted Building Consent		Final
Some work is not completed as detailed above and rectification is required	✓	FURTHER INSPECTION
A formal notice to fix will be issued.		REQUIRED YES / (NO)

SIGNED: ..... OFFICER J W Arthur DATE 21 / 10 / 08

HURUNUI District Council
P.O. Box 13
Amberley 7410
NEW ZEALAND
Telephone: (03) 314-8816
Fax: (03) 314-9181
EMAIL: info@hurunui.govt.nz

Rapid No:	Consent No:
1729/7	080237

11965

SITE INSPECTION REPORT

(BAM 214)

Name of Owner/Owner's Agent: Thomas & Baxter

Site Address: 7 Swindon Lane Amberley

Description of Consent: Dwelling with A/garage

COMMENTS Prior to final inspection the following needs attending to.

3 x soffit grills to be fitted (on inside) ✓

All storm water drain heads require grills. ✓

En Suite W.C. pan is leaking ✓

Smoke alarms are to be fitted. (x2) ✓

A gas certificate is required.

An as laid drainage plan is required ✓

Delete that which is not applicable.

INSTRUCTION TO OWNER/OWNER'S AGENT		INSPECTION TYPE
All work inspected is in accordance with the granted Building Consent		Final.
Some work is not completed as detailed above and rectification is required	✓	FURTHER INSPECTION
A formal notice to fix will be issued.		REQUIRED YES / NO

SIGNED: ..... OFFICER J W Arthur DATE 16 / 10 / 08

BC Number 080237
Rapid Number 1729/7
Inspector's Name ..... John

HURUNUI District Council

INSPECTION PROMPT (BAM 212)
FINAL – RESIDENTIAL & HABITABLE

Time Arrived: **Council Copy Viewed:** **Date:** 16 10 08

Exterior	N/A	Inspected	Interior	N/A	Inspected
Building Height Above Ground		200mm	Downlights Clear Insulation		~~yes to both~~ Halogen. Downs Kitchen + 2 Bathroom
Duct covers installed		3	Extraction Ducts to exterior		
Downpipes clipped		x2	HWC Restraints		x3
MV, ~~BV~~ installed		80mm	HWC Temp Valve		yes
Soffit lines sealed		yes	HWC Mains Valves		CWE + TPR
Penetrations sealed		yes	HWC LP Vent	✓	
Cladding clearances		100mm	Wet areas impervious		yes
Access Levels		100mm	Sanitary fixtures connected, Vented		yes
Grip Tread Access Routes		conc	Stairs – Tread/Riser/ Pitch Head Clearance	✓	
Handrails/Barriers Type/Connection	✓		Handrails/ Barriers Type/ Connection	✓	
Gas Bottle Location		E side of Garage	Gas Hob Clearance		150mm
			Window Restrictors	✓	
			Safety Glazing Bathroom		yes
			Smoke Alarms		*
			Means of Heating		Gas Fire

Other	N/A	Inspected	Other	N/A	Inspected
Tanking Certificate	✓		Electrical Certificate		✓
Pressure Test Declaration		✓	Gas Certificate		* provided
PS4 – Enginneer	✓		As Laid Drainage Plan		on Site

Additional Comments:

N/A = not applicable to project

3 Grill plates to Set. inside e out.
1 s/w grill.
Leaking En Suite W.C.
Smoke Alarms to be Setted
Gas Certificate (or copy) required.
As laid drainage plan to be supplied.

BC Number 080237 **Rapid Number** **Inspector's Name**	HURUNUI District Council

INSPECTION PROMPT (BAM 215)
COUNCIL RECORD OF CONTRACTORS

Name of Builder: Allan.	Phone Number:
Postal Address:	027 271 3269
	Registration No:
E-mail Address:	
Name of Craftsman Plumber:	Phone Number:
Postal Address:	
	Registration No:
E-mail Address:	
Name of Craftsman Gasfitter:	Phone Number:
Postal Address:	
	Registration No:
E-Mail Address:	
Name of Registered Drainlayer: Dan & Adam Cahill (Total Drainage + Excavation)	Phone Number:
Postal Address:	
	Registration No:
E-mail Address:	23915
Name of Designer:	Phone Number:
Postal Address:	
	Registration No:
E-mail Address:	
Name of Engineer:	Phone Number:
Postal Address:	
	Registration No:
E-mail Address:	

Additional Comments:

N/A = not applicable to project

HURUNUI District Council	CODE COMPLIANCE CERTIFICATE APPLICATION (BAM 006)	PROJECT NO: 080237

APPLICATION

Site Address: 7 Swindon Lane, Amberley (Street/Road)

Legal Description: Lot 6, DP 79189, BLK VIII, Teviotdale SD.
(This could include all or any of the following – Lot, DP, Section, Block, or Township, etc)

Valuation Roll Number: 2143011114

Type of Building Work: Dwelling Domestic
(eg. Domestic Dwelling)

Project Information Memorandum No: 080237

Building Consent No: 080237

Building Consent Issued by: H.D.C.
(Name of Building Consent Authority)

THE OWNER		AGENT – APPLICANT	
Owner's Name: J Thomson & H Baxter		Agent's Name: Mike Greer Homes.	
Contact person: (If owner is not an individual)		Contact person: Mike Flutey	
Mailing Address: 7 Swindon Lane, Amberley.		Mailing/Billing Address: P.O. Box 421, Rangiora.	
Street Address/Registered Office		Street Address/Registered Office: 2 Johns Road, Rangiora.	
E-mail Address:		E-mail Address: mikef@mikegreerhomes.co.nz.	
Phone Numbers:		Phone Numbers:	
Daytime: 3148335.	Mobile: 0272888195	Daytime: 3130319	Mobile: 021758767
After Hours:	Fax:	After Hours:	Fax: 3130321
Code Compliance Certificate to be posted to: P.O. Box 421 Rangiora.		Note - The Agent will be the first point of contact for communications with the Council/Building Consent Authority regarding this application / Building Work and will receive all correspondence including all invoices.	

KEY PERSONNEL		Certificate Attached
Name of **Designer**: Mike Greer Homes Ltd.	Phone Number: 3540166	
Mailing Address: 478 Moorhouse Ave, ChCh.	Registration Number:	
E-mail Address: info@mikegreerhomes.co.nz.		
Name of **Engineer**: n/a.	Phone Number:	
Mailing Address:	Registration Number:	
E-mail Address:		
Name of **Builder**: Mike Greer Homes North Canterbury Ltd	Phone Number: 3130319.	
Mailing Address: P.O. Box 421, Rangiora.	Registration Number:	
E-mail Address:		
Name of **Craftsman Plumber**: Chris Dick.	Phone Number: 3765322.	✓
Mailing Address: P.O. Box 17557	Registration Number: 10554	
E-mail Address:		
Name of **Registered Drainlayer**: Daniel Sincock.	Phone Number:	

Mailing Address: 22 Dawson Douglas Pl, Kaiapoi.		
E-mail Address:	Registration Number: 16594	
Name of **Registered Electrician**: Hayden Brown	Phone Number: 3132397.	✓
Mailing Address: 179 Spring Bank Rd, RD1 Rangiora	Registration Number: E248614	
E-mail Address:		
Name of **Registered Gasfitter**: Canterbury Gas	Phone Number: 0335747 83.	
Mailing Address: Shefield Cres, Christchurch.	Registration Number:	
E-mail Address:		

Add any additional people on another sheet.

SIGNATURE

☑ I request that you issue a Code Compliance Certificate for this work under Section 95 of the Building Act 2004.

Signed by or for and on behalf of the Owner: M.J. Hall

☐ Owner ☑ Agent Date: 14.10.08.

Note: If acting "for and on behalf", please read the following declaration before signing: "I hereby declare that I am authorised to act as Agent of the Owner".

Additional Information to Note

1. A final inspection must have been completed prior to this application being sought.
2. The Code Compliance Certificate will be based on the approved building consent documents, so any variations to the original approved plans are required to be documented & approved prior to the work being carried out.
3. A Code Compliance Certificate will not be issued until all of the information required on this form that is relevant to the job is provided to the Council. This includes all Names, Certificates from personnel who carried out the work, Registration Numbers, Producer Statements, or any other required documents.
4. Certificates that relate to energy work (Electrical & Gasfitters).
5. The specified systems are listed on the attached form are to be contained in the compliance schedule for the building. In the opinion of the personnel who installed them, they are capable of performing to the performance standards set out in the building consent.

Notes by applicant: (Other notes or comments which you as the applicant may wish to add)

ELECTRICAL WORKERS REGISTRATION BOARD
Safety + Competency

EWRB 551

Electrical Certificate of Compliance

No. 2541154

for prescribed electrical work that is carried out on electrical installations and involves the placing or positioning or the replacing or repositioning of conductors (including fittings attached to those conductors).

To be completed whether or not an Inspection is required.

No. of attachments

CUSTOMER INFORMATION - PLEASE PRINT CLEARLY

Name of customer: Hannah Baxter & Jon Thomson Phone: 0272889195

Address of installation: 7 Swindon Lane

Postal address of customer (if not as above): —

WORK DETAILS

57 No. of lighting outlets

32 No. of socket outlets

1 No. of ranges

1 No. of water heaters

Was any installation work carried out by the homeowner? ☐ Yes ☐ No

Please tick (✓) as appropriate where work includes:

✓ Mains

✓ Switchboard

✓ Main earthing system

☐ Electric lines

Description: Wire house as per arranged by owner

If necessary attach any pages with sketches of work done

It is recommended that test results be recorded here:

Visual Examination ✓

Earth Continuity ✓

Bonding ✓

Polarity ✓

Insulation Resistance 2 Mohm

Other Earth loop Impedance 0.48Ω Fault Current 476 Amps

CERTIFICATION OF WORK

I certify that the above electrical work has been carried out in accordance with the requirements of the Electricity Act 1992 and Electricity Regulations 1997.

ELECTRICAL WORKER DETAILS

Name	Hayden Brown
Registration no.	E248614
Company	HB Electrical
Signature	HBrown
Date	09/10/08
Contact Ph No.	027 2333 692

CERTIFICATION OF ELECTRIC LINES

(to be completed where a separate electrical worker has installed the electric line portion of the mains)

Name	
Registration no.	
Company	HB Electrical
Signature	
Date	
Contact Ph No.	

INSPECTION DETAILS

Electrical work requiring inspection by a registered electrical inspector

✓ New mains ✓ Switchboard ✓ Earthing system ☐ Installation work in hazardous areas

I certify that the inspection has been carried out in accordance with the requirements of regulation 41 of the Electricity Regulations 1997.

Name	Peter Reppel
Signature	PReppel
Registration no.	E241509
Date	10/10/2008
Daytime Contact Ph No.	

CUSTOMER COPY - THIS IS AN IMPORTANT DOCUMENT AND SHOULD BE RETAINED

This form is approved by the Electrical Workers Registration Board (PO Box 10-156, Wellington. Freephone 0800 66-1000) for the purposes of the Electricity Regulations 1997.



PinkBatts® PINKFIT®

REGISTERED INSTALLERS OF PINK® BATTS® INSULATION

Home Insulation Installation Guarantee

for new homes insulated in walls and/or ceilings

This is to certify that

this home has been insulated in the walls and/or ceilings with Pink®Batts® insulation by a Tasman Insulation approved Pink®Batts® installer. Pink®Batts® when properly installed satisfies the requirements of the New Zealand Standard NZS4246:2006 and the durability requirement of the New Zealand Building Code B2.3.1(a). The PinkFit® installer guarantees that, at the time of installation the Pink®Batts® have been properly installed. This guarantee is transferable to any subsequent owners of the home.

Signed..... Date 03 SEP 2008

Pink® Batts® Installer T/A PINKFIT CHRISTCHURCH

Registration Details:

Compliance Number: 35070

Builder Details:
Mike Greer

Site Details:
Mike Greer,
7 Swindon Lane
Amberley, BHC

Date Printed: 03-Sep-2008
Install Date: 21-Aug-2008
Completion 21-Aug-2008

Product Details

Pink® Batts® Ceiling R3.6
Pink® Batts® Ultra™ Wall R2.6



Pink®Batts® and PinkFit® are registered trademarks of Tasman Insulation New Zealand.

Comfortable living with

Pink® Batts®

WARM·DRY·QUIET

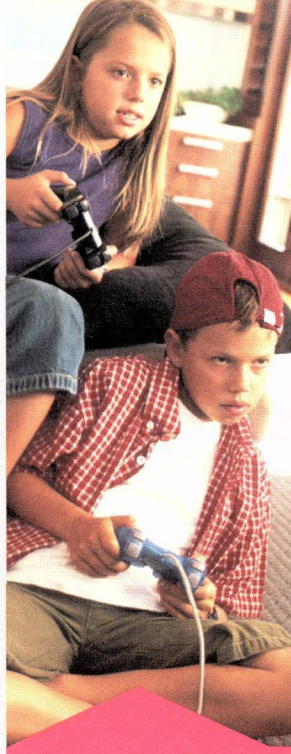

Comfortable living begins with a comfortable home, and choosing products from the Pink®Batts® range is the first step. Other areas within your home to consider are:

Window ~ Open windows whenever possible, especially when using the kitchen, laundry and bathrooms, to allow the moisture to escape your home.

Curtains ~ Open curtains during sunny periods and close when the sun goes down.

Kitchen ~ Keep lids on pots and use an extractor fan or open windows when cooking to minimise condensation that can linger for hours.

Hot Water Cylinder Wrap ~ Install to keep your water hotter for longer while also helping to reduce your energy bill.

Remember your "home has to breathe..." therefore regularly ventilating your home will help avoid mouldy ceilings and walls, window condensation, musty smells and possible paint damage.

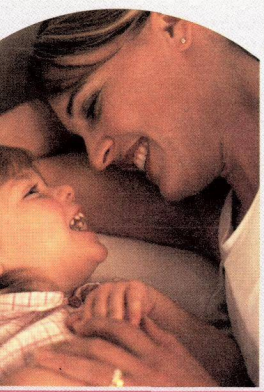

Pink® Batts®

WARM·DRY·QUIET

PinkBatts® ULTRA™

ULTRA THICK - ULTRA WARM

PinkBatts® SILENCER®

PEACE AND QUIET THAT'S BU

PinkBatts® COSY® FLOOR

PinkBatts® HOT WATER CYLINDER WRAP

PinkBatts® PINKFIT®

PREFERRED PINK® BATTS® INSTALLERS

Pink®Batts® and PinkFit® are registered trademarks of Tasman Insulation New Zealand.

PRESSURE TEST DECLARATION

TO: Hurunui District Council

ATTENTION: BUILDING OFFICERS

I, Chris Dick of Laser Plumbing Christchurch East declare that hot and cold water pipes run in the building:

7 Swindon Lane, Amberley

have been pressure tested to 1500 kPa for a minimum of 15 minutes without pressure drop (Complying with NZ Building Code G12/AS1 Clause 7.5.1).

Building Consent No: 080237

Dated this day: 14.10.08

Signed:

Plumbers Registration No: 10554

Address: 69A Nayland St
Christchurch

Phone No: 3765322

Witness Present: Carol McCann

Occupation: Director

Address: 69A Nayland St
Christchurch

Phone No: 3765322

HURUNUI District Council
P.O. Box 13
Amberley 7410
NEW ZEALAND
Telephone: (03) 314-8816
Fax: (03) 314-9181
EMAIL: info@hurunui.govt.nz

Rapid No:	Consent No:
1729 - 7	080237

12501

SITE INSPECTION REPORT

(BAM 214)

Name of Owner/Owner's Agent: ~~Thomas~~ & Baxter

Site Address: 7 Swindon Lane, Amberley

Description of Consent: Dwelling with attached Garage

COMMENTS

Sewer & ~~stormwater~~ laid in 110mm uPVC on 14/10mm crushed chip. Level tested, laid with fall. Sewer placed on full water test, holding.
Noted 2 front downpipes direct to street disposal system, 3 at rear directed to soakhole which has been excavated 1.75m deep into good free draining gravels.

* As laid plan yet to be supplied

Delete that which is not applicable.

INSTRUCTION TO OWNER/OWNER'S AGENT	Total Drainage	INSPECTION TYPE
All work inspected is in accordance with the granted Building Consent	✓	Drainage
Some work is not completed as detailed above and rectification is required	*	FURTHER INSPECTION
A formal notice to fix will be issued.		REQUIRED ~~YES~~ / NO

SIGNED: [signature] OFFICER ~~A~~ B. Roberts DATE 19 / 9 / ~~2008~~

BC Number ...080237.....

Rapid Number ...1729/7.....

Inspector's Name ~~Kevin Roberts~~ Gerard Mahon

HURUNUI District Council

INSPECTION PROMPT (BAM 210)
DRAINAGE

Time Arrived: 3:40 **Council Copy Viewed:** **Date:** 19/9/08

Sewerage System	N/A	Inspected	Stormwater System	N/A	Inspected
Drain Material		uPVC	Drain Material		uPVC
Gradients		1:80	Gradients		1:80
Inspection Points		4	Inspection Points		1
Bedding Material		14/10mm Crushed chip	Bedding Material		14/10 Crushed chip
Cover		1200 to lateral 300 to rear	Cover		
Connection to Lateral		12D/Yes (glued)	Connection to Lateral		
Joint Test		Full water	Soak Pits size		
Main Vent Size/Location	✓	outside ensuite	Soak Pit Location		1750 Deep 1200 wide 1800 long
Branch Vent Size/Location	✓		Gutter Sizes and Overflows	✓	
Septic Tank Type	✓		Deck Overflow	✓	
Septic Tank Location	✓		Downpipe Size		
ECAN Approval Effluent	✓		Downpipe Positions		
Effluent Location	✓		Deck Drains	✓	
Effluent Type	✓		Deck Overflows	✓	
Drainlayers Reg	✓	23915 Adam Cahill	Bubble Up sumps	✓	
As Laid Plan			As Laid Plan		

Additional Comments:

N/A = not applicable to project

HURUNUI District Council
P.O. Box 13
Amberley 7410
NEW ZEALAND
Telephone: (03) 314-8816
Fax: (03) 314-9181
EMAIL: info@hurunui.govt.nz

Rapid No:	Consent No:
1729/7	080237

12162

SITE INSPECTION REPORT

(BAM 214)

Name of Owner/Owner's Agent: Thomas & Baxter

Site Address: 7 Swindon Ln Amberley

Description of Consent: Dwelling with A/Garage

COMMENTS Bracing has been placed round dwelling as per plan and fixed in place as per manufacturers spec's
SP BL GS1a & GS2 braces
10mm Gib Aqualine to both bathrooms
10mm std gib walls & ceilings

OK to Stop

Delete that which is not applicable.

INSTRUCTION TO OWNER/OWNER'S AGENT		INSPECTION TYPE
All work inspected is in accordance with the granted Building Consent	✓	Pre Stop
Some work is not completed as detailed above and rectification is required		FURTHER INSPECTION
A formal notice to fix will be issued.		REQUIRED YES / NO

SIGNED: left on site OFFICER J W Arthur. DATE 4 / 9 / 08

BC Number 080237

Rapid Number 1729|7

Inspector's Name John

HURUNUI District Council

INSPECTION PROMPT (BAM 205)
PRE-STOP

Time Arrived: **Council Copy Viewed:** **Date:** 4 9 08

Bracing	**N/A**	**Inspected**	**Material**	**N/A**	**Inspected**
Edge Nailing		150mm c/s	Wet Areas		10mm Gib Aqualine
Bracing Locations		As plan	Ceilings		10mm std Gib
Ceiling Diaphragms	✓		Walls		10mm std Gib
Bracing Type		SP BL SSla & SS2			
Tanking	**N/A**	**Inspected**			
Product	✓				
Location	✓				

Additional Comments:

N/A = not applicable to project

HURUNUI District Council

P.O. Box 13
Amberley 7410
NEW ZEALAND
Telephone: (03) 314-8816
Fax: (03) 314-9181
EMAIL: info@hurunui.govt.nz

Rapid No:	Consent No:
1729/7	080237

12298

SITE INSPECTION REPORT

(BAM 214)

Name of Owner/Owner's Agent: Thomas & Baxter

Site Address: 7 Swindon Ln Amberley

Description of Consent: Dwelling with Att Garage

COMMENTS

M.C. of frame and ceiling battens 10-17%
Air foam seals round windows & doors
Fibreglass Batts installed.
R 2-6 Ultra wall batts
R 3·6 ceiling batts
Dux piped for bath hot & cold supplies
Braced as per plan. SP BH GS1a & GS2.
Bolt & bracket hold downs completed for one N1
To Complete

Garage - Bathroom wall insulation
Brace element N1 bolt & bracket hold downs

OK to line when above complete.

Delete that which is not applicable.

INSTRUCTION TO OWNER/OWNER'S AGENT		INSPECTION TYPE
All work inspected is in accordance with the granted Building Consent	✓	Preline
Some work is not completed as detailed above and rectification is required	✓	FURTHER INSPECTION
A formal notice to fix will be issued.		REQUIRED YES (NO)

SIGNED: ..... OFFICER J Arthur DATE 21 / 8 / 08

BC Number 080237

Rapid Number 1729/7

Inspector's Name John

HURUNUI District Council

INSPECTION PROMPT (BAM 204)
PRELINE (INCLUDING PLUMBING)

Time Arrived: **Council Copy Viewed:** **Date:** 21 8 08

Framing	N/A	Inspected	Bracing	N/A	Inspected
Moisture Content		12 - 17%	Location/type		SP BL GSla & GS2
Ceiling Batten material		KD Pine	Clear of wet areas		yes
Ceiling Batten size		70 x 35	Connections/ fixings		Bolts & Brackets
Ceiling Batten spacing		400 c/s	Roof Bracing		Hips
Ceiling Batten MC		10 - 15%	Dragon Ties	-	
Window Air Seals		Air Seam.	Diaphragms	-	
Insulation Material		Fibreglass Batts	Fire Walls	-	
R Value Walls		R2.6 Ultra			
R Value Ceiling		R3.6			
Insulation placement		Good.			
Internal ventilation		Windows			
Safety Glazing		2x Bathrooms & 3x Sets Doors			
Water	**N/A**	**Inspected**	**Wastes**	**N/A**	**Inspected**
Pipework		Dux	Pipework		PVC
Jointing		Crimped	Size		100 & 40 ~~& 50~~ mm
Support/clipping		900 c/s	Support		Frame & conc floor
Pressure Test		* not seen	Gradient		1:40
Lagging		Envirotex Seam	AAV cer	✓	
Shut of Valve		in garage			
Plumbers Reg		*			

Additional Comments:

N/A = not applicable to project

HURUNUI District Council
P.O. Box 13
Amberley 7410
NEW ZEALAND
Telephone: (03) 314-8816
Fax: (03) 314-9181
EMAIL: info@hurunui.govt.nz

Rapid No:	Consent No:
1729/7	080237

12294

SITE INSPECTION REPORT

(BAM 214)

Name of Owner/Owner's Agent: Thomas & Baxter

Site Address: 7 Swindon Lane Amberley

Description of Consent: Dwelling with A/Garage

COMMENTS

45 x 45 battens @ 400 ctrs to ext side of chimney only to build it out.
Battens covered over with Thermakraft cover up wrap.
40 x 20 EPS grooved battens @ 400 ctrs over wrap
P.V.C. vermin strip round bottom
Galv metal flashings to both internal corners.

Delete that which is not applicable.

INSTRUCTION TO OWNER/OWNER'S AGENT		INSPECTION TYPE
All work inspected is in accordance with the granted Building Consent	✓	Pre Clad
Some work is not completed as detailed above and rectification is required		FURTHER INSPECTION
A formal notice to fix will be issued.		REQUIRED YES / NO

SIGNED: ..... OFFICER J W Arthur DATE 20 / 8 / 08

BC Number 080237

Rapid Number 1729/7

Inspector's Name ..... John

HURUNUI District Council

INSPECTION PROMPT (BAM 208)
½ HIGH / PRE CLAD Chimney Only

Time Arrived: **Council Copy Viewed:** **Date:** 20 8 08

½ High	N/A	Inspected	Pre Clad	N/A	Inspected
Cavity Width			Cavity Batten Size		40x20 E.P.S.
Clean Cavity			Cavity Batten Spacing		400 c/s
Cavity closed soffit			Cavity Batten Treatment	✓	
Tie Type			Vermin Proofing		P.V.C.
Tie Spacing			Head Flashing		
Brick Type			Jamb Flashing		
Siting on Foundation			Sill Flashing		
Window cover			Barrier Fixing		Staples
Weep hole / Perpends			Barrier Type		Thermalwall Cover up
Motar Thickness			Thermal Barrier		
Penetrations			Internal Gutters		
Steel Lintel Sizes			Netting		
Lintel Material			Substrate Fixing		
Lintel Fixing					

Additional Comments:

N/A = not applicable to project

HURUNUI District Council
P.O. Box 13
Amberley 7410
NEW ZEALAND
Telephone: (03) 314-8816
Fax: (03) 314-9181
EMAIL: info@hurunui.govt.nz

Rapid No:	Consent No:
1729/7	080237

12285

SITE INSPECTION REPORT

(BAM 214)

Name of Owner/Owner's Agent: Thomas Baxter

Site Address: 7 Swindon Ln Amberley

Description of Consent: Dwelling with A/Garage

COMMENTS

Thermakraft cover up stapled to frame
40-60 mm clean cavity maintained
70 Series brick being laid
Metal brick ties 600 x 330.
30mm cover to frames
DPC round frames
Weep holes every 2nd brick
Soffits closed off cavity with Hardies sheet.
Alubond sill tape to sills & H corners
Galv metal flashing to both internal corners of chimney
45 x 45 battens x 400 cs to outside wall of chimney only

Delete that which is not applicable. Dwangs to be angled & cut short of verticals

INSTRUCTION TO OWNER/OWNER'S AGENT * check next time.		INSPECTION TYPE
All work inspected is in accordance with the granted Building Consent	✓	½ high cladding
Some work is not completed as detailed above and rectification is required		FURTHER INSPECTION
A formal notice to fix will be issued.		REQUIRED YES / NO

SIGNED: left on site OFFICER JWArthur DATE 19/8/08

BC Number ..... 080237 .....

Rapid Number ..... 1729/7 .....

Inspector's Name ..... John .....

HURUNUI District Council

INSPECTION PROMPT (BAM 208)
½ HIGH / PRE CLAD

Time Arrived: **Council Copy Viewed:** **Date:** 19 8 08

½ High	N/A	Inspected	Pre Clad	N/A	Inspected
Cavity Width		40 - 60mm	Cavity Batten Size	–	
Clean Cavity		yes	Cavity Batten Spacing	–	
Cavity closed soffit		yes - hardies	Cavity Batten Treatment	–	
Tie Type		Metal	Vermin Proofing	–	
Tie Spacing		600 x 330	Head Flashing		Hardies soffit.
Brick Type		70 Series	Jamb Flashing		DPC
Siting on Foundation		Flush to +30mm	Sill Flashing		Alubond tape
Window cover		30mm	Barrier Fixing		Staples
Weep hole / Perpends		every 2nd	Barrier Type		Thermakraft Cover up
Motar Thickness		10-12mm	Thermal Barrier	–	
Penetrations		Sealed round	Internal Gutters	–	
Steel Lintel Sizes	–		Netting	–	
Lintel Material	–		Substrate Fixing	–	
Lintel Fixing	–				

Additional Comments:

N/A = not applicable to project

Galv metal flashings to internal corn of chimney.
45x45 battens x 400 c/s to outside face of chimney only.

HURUNUI District Council
P.O. Box 13
Amberley 7410
NEW ZEALAND
Telephone: (03) 314-8816
Fax: (03) 314-9181
EMAIL: info@hurunui.govt.nz

Rapid No:	Consent No:
1729/7	080237

12464

SITE INSPECTION REPORT

(BAM 214)

Name of Owner/Owner's Agent: Baxter & Thomson

Site Address: 7 Swindon Ln Amberley

Description of Consent: Dwelling with Attached Garage

COMMENTS

DPC below plates
90 x 45 H3 T & B Plates. Tri Sded @ c/nail x 900
90 x 45 H1.2 MSG8 Frame x 600 c/s
2 rows at dwangs
290, 240, 190, 140 & 90x90 lintels Metal Strap Fixed.
FB 20 H beam across garage opening.
Roof trusses x 900 c/s. Pairs CT200 or Wire dog Fix
70 x 45 purlins x 900 c/s max Nail & 1 x dog per purlin
Braced as per plan SP, BL SS1 & 2. Bolt & bracket fixed.

* To Complete
Slab fixing or metal angle or ply to the following brace elements Q3 D2 Q2 B2 Q1 E1 D1 O1 N1
* Will pick up at next inspection

Delete that which is not applicable.

INSTRUCTION TO OWNER/OWNER'S AGENT		INSPECTION TYPE
All work inspected is in accordance with the granted Building Consent		Framing
Some work is not completed as detailed above and rectification is required	✓	FURTHER INSPECTION
A formal notice to fix will be issued.		REQUIRED YES / NO

SIGNED: left on site OFFICER J.W. Arthur DATE 24 / 7 / 08

BC Number 080237

Rapid Number 1729/7

Inspector's Name ..... John

HURUNUI District Council

INSPECTION PROMPT (BAM 206)
FRAMING/PREWRAP

Time Arrived: **Council Copy Viewed:** **Date:** 24/7/08

Framing	N/A	Inspected	Fixings	N/A	Inspected
Timber Species		Pine	Bottom Plate		Tri Fold & cone Nails @ 900 c/s
Timber Grade		MSG 8	Top Plate – Stud		Nails & gang nail plates & straps.
Timber Treatment		H3 T&B Plates Hi-2 Frame	Truss/Rafter – Top Plate		Pairs CT 200 or " 2 nails.
Stud sizes		90×45	Purlins		Nails @ 1 & 2 nail per purlin
Stud Spacing		600 c/s	Tile Battens	✓	
DPC Bottom Plate		yes	Lintels		Metal Straps
Lintel Sizes		290, 240, 190, 140,	90×90		
Post Sizes	✓		Steel Angles		x3 nails & Bolts
Truss Layout		900 c/s	Post to Beam	✓	
Truss Support		① Top Plate	Post to Found	✓	
Girder Truss Support		" " "	Fire Walls	✓	
Purlin Size & Spacing		70×45 × 900 c/s	Stringers	✓	
Batten Size & Spacing	✓				
Rafters	✓				
Steel Beams	✓				
Portal Frames	✓				

Bracing	N/A	Inspected
Location/Type		SP & BL & GS & 2
Roof Bracing		Hipped
Dragon Ties	✓	
Fixing / Connections		Bolts & Brackets
Ply Nailing		150mm c/s
Ply Treatment		H3

Additional Comments:

N/A = not applicable to project FB 201H Beam across garage opening.

HURUNUI District Council

P.O. Box 13
Amberley 7410
NEW ZEALAND
Telephone: (03) 314-8816
Fax: (03) 314-9181
EMAIL: info@hurunui.govt.nz

Rapid No:	Consent No:
1729/7	080237

11481

SITE INSPECTION REPORT

(BAM 214)

Name of Owner/Owner's Agent: Thomson Baxter

Site Address: 7 Swindon Lane Amb.

Description of Consent: New Dwelling + A/Garage

COMMENTS

slab thickening now located under stove/living room wall

OK to pour

Delete that which is not applicable.

INSTRUCTION TO OWNER/OWNER'S AGENT		INSPECTION TYPE
All work inspected is in accordance with the granted Building Consent		Re- slab
Some work is not completed as detailed above and rectification is required		FURTHER INSPECTION
A formal notice to fix will be issued.		REQUIRED ~~YES~~ (NO)

SIGNED: left on site with Hdr. OFFICER [signature] DATE 7/7/08

Job: 060828 Client: Mike Greer Homes-North Canterbury Site: Baxter & Thomson
Phone: 7 Swinton Lane Amberley

Description:
Building Consent No.: Phone:

PRODUCER STATEMENT
MiTek 20/20™ TRUSS DESIGN PROGRAM

Certification of MiTek 20/20™ Truss Design Program

The MiTek 20/20™ truss design program has been developed by MiTek New Zealand Ltd for the design of GANG-NAIL timber roof, floor and attic trusses in New Zealand. The truss designs computed by this program are prepared using sound and widely accepted engineering principles, and in accordance with NZS 4203, NZS 3603 and NZS 3604 as verification methods and acceptable solutions of the approved documents of the New Zealand Building Code to satisfy the requirements of the Building Regulations 1992: Clause B1 - Structure. This computer design for the proposed building complies with the relevant provisions of the NZ Building Code. This is subject to all proprietary products meeting their performance specification requirements, the provision of adequate bracing, fixings and the correct input of design data carried out by suitably trained personnel.

Summary of MiTek 20/20™ Truss Design Data and Output

The MiTek 20/20™ computer design output for this job titled and located at the site identified on the top of this page is based on the following parameters entered into the program. The owner must ensure that the following job details below are current and relevant to the project before fabrication and erection of the GANG-NAIL trusses.

Job Details

Roof Truss

Timber Group:	MSG8_UT	Pitch:	28.000 deg	Std Overhang:	600 mm
Roof		**Ceiling**		**Wind**	
Material:	Light	Material:	Standard	Area:	High (44.0 m/s)
Dead Load:	0.250 kPa	Dead Load:	0.200 kPa	Pressure Coeff:	Cpe = varies; Cpi = -0.30, 0.20
Restraints:	900 mm centres	Restraints:	600 mm centres	**Snow**	
Live Load:	Qur = 0.250 kPa			Location:	Christchurch at 100 m
	Qc = 1.000 kN			Open Ground Loac	0.550 kPa
				Basic Roof Load:	0.550 kPa

These trusses must be fabricated and erected in accordance with the GANG-NAIL manual. Proper erection bracing must be installed to hold the components true and plumb and in a safe condition until permanent bracing is fixed. All permanent bracing and fixing must be installed before any loads are applied. The specifications for timber shall be as shown on the output. The timber shall be standard gauged and treated to the requirements of NZS 3640:2003. Unless otherwise noted, this design assumes that the steel fixings and timber connectors are situated in a closed environment, as defined by NZS3604:1999 Section 4.

Truss List

Legend: * = detail only, ? = input only, ~~Txx~~ = failed design, Unmarked trusses = designed successfully, LB = lateral bracing required

Truss	Qty	Span (mm)	Pitch (deg)	Spacing (mm)	Truss	Qty	Span (mm)	Pitch (deg)	Spacing (mm)	Truss	Qty	Span (mm)	Pitch (deg)	Spacing (mm)
TR02A	1	10780	28.000	900 LB	*R09	1	3343	28.000	900	J06A	1	2277	28.000	900
TR02	1	10780	28.000	900	*R08	1	1543	28.000	900	J06	1	2277	28.000	900
TR01	1	10780	28.000	900	*R07	1	5131	28.000	900	J05C	2	1567	28.000	900
TG02	1	10780	28.000	900	*R06	1	928	28.000	900	J05B	1	1567	28.000	900
TG01	1	10780	28.000	900	*R05A	1	1090	28.000	900	J05A	1	1567	28.000	900
T18	1	1180	0.000	900	*R05	1	1090	28.000	900	J05	2	1567	28.000	900
T17	1	3567	28.000	767	*R04A	1	1280	28.000	900	J04C	2	2467	28.000	900
T16	1	4467	28.000	767	*R04	2	1280	28.000	900	J04B	1	2467	28.000	900
T15	1	4600	28.000	858	*R03A	1	1230	28.000	900	J04A	1	2467	28.000	900
T14	1	3567	28.000	790	*R03	1	1230	28.000	900	J04	1	2467	28.000	900
T[redacted]	2	3080	28.000	643	*R02A	9	913	28.000	900	J03B	1	1517	28.000	900
T[redacted]	1	3080	28.000	643	*R02	9	913	28.000	900	J03A	1	1517	28.000	900
T11A	1	2667	28.000	752	*R01A	1	1775	28.000	900	J03	1	1517	28.000	900
T11	1	2667	28.000	752	*R01	1	1775	28.000	900	J02C	1	2062	28.000	900
T10	1	2467	28.000	752	J10B	1	3567	28.000	900	J02B	1	2062	28.000	900
T09	1	2667	28.000	900	J10A	1	3567	28.000	900	J02A	1	2062	28.000	900
T08	3	10780	28.000	805 LB	J10	1	3567	28.000	900	J02	1	2062	28.000	900
T07	1	5970	28.000	948	J09	1	1127	28.000	900	J01B	1	2962	28.000	900
T06	1	10780	28.000	900 LB	J08F	1	2667	28.000	900	J01A	1	2962	28.000	900
T05	1	10645	28.000	900 LB	J08E	1	2667	28.000	900	J01	1	2962	28.000	900
T04	1	4600	28.000	900	J08D	1	2667	28.000	900	*HB08	1	3324	20.605	900
T03A	1	3992	28.000	900	J08C	1	2667	28.000	900	*HB07	1	5368	20.605	900
T03	1	3992	28.000	900	J08B	1	2667	28.000	900	*HB06	1	5130	20.605	900
T02	1	3080	28.000	900	J08A	1	2667	28.000	900	*HB05	2	4024	20.605	900
T01	1	5970	28.000	900	J08	1	2667	28.000	900	*HB04	1	984	20.605	900
*R12A	4	1800	28.000	805	J07C	1	1377	28.000	900	*HB03	4	4293	20.605	900
*R12	4	1800	28.000	805	J07B	1	1377	28.000	900	*HB02	2	2950	20.605	900
*R11A	1	1800	28.000	900	J07A	1	1377	28.000	900	*HB01	2	4993	20.605	900
*R11	8	1800	28.000	900	J07	1	1377	28.000	900					
*R10	1	1192	28.000	900	J06B	1	2277	28.000	900					

Total quantity : 130

Job: 060828 Client: Mike Greer Homes-North Canterbury Site: Baxter & Thomson
Phone: 7 Swinton Lane Amberley

Description:
Building Consent No.: Phone:

The computer design input has been carried out by:

Signed: ..... Date: 27/6/08.

Name of Computer Operator: .....

Qualifications and Title: .....

Company: **Builders Hardware Company Ltd**

Verification / Acceptance of Input Data:

I have checked the input data against the construction drawings and specifications and verify that they are correct and suitable for this job.

Signed: ..... Date: .....

Name: ..... Company: .....

Stud to top plate fixings:
Wall Type A
Wall Type B
Wall Type C
Wall Type D

Lintel Fixings
Type B = B
Type C = C
Type D = D

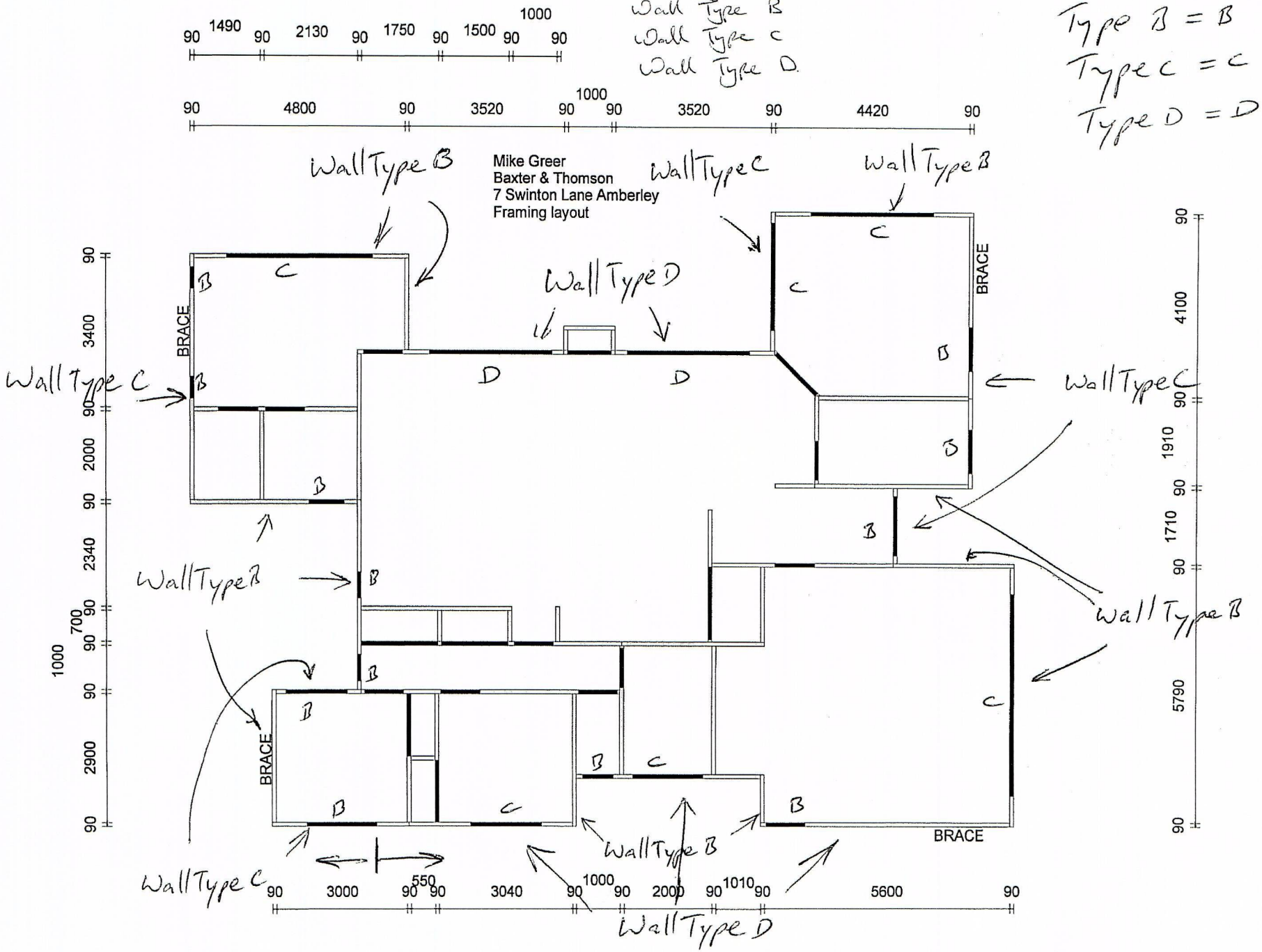

Job: 060828 Client: Mike Greer Homes-North Canterbury Site: Baxter & Thomson
Phone: 7 Swinton Lane Amberley

Description:
Building Consent No.: Phone:

TRUSS FIXING SELECTION REPORT - Characteristic Loads

Fixings are selected from the LUMBERLOK Brochure 03/4 (Timber Connectors Characteristic Loadings Data)

Truss List

Legend: * = detail only, ? = input only, ~~Txx~~ = failed design, Unmarked trusses = designed successfully

Truss	Qty	Span (mm)	Joint	Down (kN)	Uplift (kN)	Bearing	Fixing Qty	Fixing Selected
TR02A	1	10780	A	4.345	2.351	Cross	1	Pair of Wire Dog Staples
			H	3.267	1.748	Butt	1	JH 47x90
			N	11.059	6.197	Cross	1	CT400
TR02	1	10780	A	4.321	2.325	Cross	1	Pair of Wire Dog Staples
			H	1.858	0.872	Cross	1	Pair of Wire Dog Staples
			N	12.611	7.099	Cross	1	CT400
TR01	1	10780	A	5.145	2.840	Cross	1	Pair of Wire Dog Staples
			F	2.606	1.406	Cross	1	Pair of Wire Dog Staples
			N	10.819	6.112	Cross	1	CT400
TG02	1	10780	A	4.188	2.237	Cross	1	Pair of Wire Dog Staples
			F	6.619	4.203	Butt	1	Pair of MultiGrips
			N	12.248	9.821	Cross	1	CT200 pair
TG01	1	10780	A	6.854	4.206	Cross	1	CT400
			F	3.661	2.692	Cross	1	Pair of Wire Dog Staples
			Q	19.634	14.356	Cross	1	16kN Truss to Top Plate
T18	1	1180	A	2.719	1.460	Butt	1	JH 47x90
			B	3.528	1.875	Butt	1	JH 47x90
T[redacted]	1	3567	B	3.428	2.128	Cross	1	Pair of Wire Dog Staples
			H	2.588	1.409	Butt	1	JH 47x90
T16	1	4467	B	3.736	2.333	Cross	1	Pair of Wire Dog Staples
			F	1.847	0.986	Butt	1	JH 47x90
			J	1.777	0.940	Cross	1	Pair of Wire Dog Staples
T15	1	4600	B	6.011	3.680	Cross	1	CT400
			F	11.838	7.093	Cross	1	CT400
T14	1	3567	B	3.530	2.191	Cross	1	Pair of Wire Dog Staples
			H	2.665	1.451	Butt	1	JH 47x90
T13	2	3080	A	1.859	0.971	Cross	2	Pair of Wire Dog Staples
			E	2.578	1.664	Cross	2	Pair of Wire Dog Staples
T12	1	3080	A	4.333	1.251	Cross	1	Pair of Wire Dog Staples
			E	2.938	1.705	Cross	1	Pair of Wire Dog Staples
T11A	1	2667	A	1.942	1.022	Cross	1	Pair of Wire Dog Staples
			E	1.942	1.091	Butt	1	JH 47x90
T11	1	2667	A	1.892	1.060	Cross	1	Pair of Wire Dog Staples
			F	2.692	1.394	Butt	1	JH 47x90
			D	0.419	0.367	Cross	1	Pair of Wire Dog Staples
T10	1	2467	E	1.710	0.932	Butt	1	JH 47x90
			C	2.586	1.664	Cross	1	Pair of Wire Dog Staples
T09	1	2667	B	3.263	2.109	Cross	1	Pair of Wire Dog Staples
			F	2.230	1.189	Butt	1	JH 47x90
T08	3	10780	A	4.648	2.445	Cross	3	Pair of Wire Dog Staples
			O	8.976	5.126	Cross	3	CT400
			Q	3.187	1.704	Cross	3	Pair of Wire Dog Staples
T07	1	5970	B	6.415	3.846	Cross	1	CT400
			F	5.437	2.927	Cross	1	Pair of Wire Dog Staples
T06	1	10780	M	9.954	5.687	Cross	1	CT400
			K	3.619	1.935	Cross	1	Pair of Wire Dog Staples
			J	5.221	2.747	Cross	1	Pair of Wire Dog Staples
T05	1	10645	A	5.167	2.707	Butt	1	JH 47x90
			O	9.631	5.515	Cross	1	CT400
			Q	3.769	2.014	Cross	1	Pair of Wire Dog Staples
T04	1	4600	B	6.384	4.008	Cross	1	CT400
			F	6.384	4.008	Cross	1	CT400
T03A	1	3992	B	5.806	3.707	Cross	1	CT400
			H	5.487	2.892	Cross	1	Pair of Wire Dog Staples
T03	1	3992	G	7.262	4.419	Cross	1	CT400
			E	5.780	3.742	Cross	1	CT400
T02	1	3080	B	3.786	2.396	Cross	1	Pair of Wire Dog Staples
			F	3.786	2.396	Cross	1	Pair of Wire Dog Staples
T01	1	5970	B	9.400	6.052	Cross	1	CT400
			F	8.519	5.234	Cross	1	CT400
*R12A	4	1800						
*R12	4	1800						
*R11A	1	1800						
*R11	8	1800						
*R10	1	1192						
*R09	1	3343						
*R08	1	1543						
*R07	1	5131						
*R06	1	928						

Builders Hardware Company Ltd

Job: 060828
Client: Mike Greer Homes-North Canterbury
Phone:
Site: Baxter & Thomson
7 Swinton Lane Amberley
Description:
Building Consent No.:
Phone:

Truss	Qty	Span (mm)	Joint	Down (kN)	Uplift (kN)	Bearing	Fixing Qty	Fixing Selected
*R05A	1	1090						
*R05	1	1090						
*R04A	1	1280						
*R04	2	1280						
*R03A	1	1230						
*R03	1	1230						
*R02A	9	913						
*R02	9	913						
*R01A	1	1775						
*R01	1	1775						
J10B	1	3567	F	1.481	1.835	Butt	1	JH 47x90
			D	1.014	0.898	Butt	1	Pair of 3.15d Nails
			E	7.811	4.181	Cross	1	CT400
J10A	1	3567	B	4.022	2.102	Cross	1	Pair of Wire Dog Staples
			G	2.408	1.649	Butt	1	JH 47x90
J10	1	3567	E	0.390	0.392	Butt	1	Pair of 3.15d Nails
			D	1.531	1.466	Cross	1	Pair of Wire Dog Staples
			F	7.646	3.476	Cross	1	CT400
J09	1	1127	E	3.221	0.309	Butt	1	JH 47x90
			F	0.944	1.978	Butt	1	JH 47x90
			B	1.025	1.040	Cross	1	Pair of Wire Dog Staples
J08F	1	2667	B	3.146	0.716	Cross	1	Pair of Wire Dog Staples
			H	0.472	0.410	Butt	1	Pair of 3.15d Nails
			E	2.996	2.262	Cross	1	Pair of Wire Dog Staples
			F	1.272	1.108	Cross	1	Pair of Wire Dog Staples
			G	1.380	1.199	Cross	1	Pair of Wire Dog Staples
J08E	1	2667	B	3.260	1.853	Cross	1	Pair of Wire Dog Staples
			F	1.600	1.044	Butt	1	JH 47x90
J08D	1	2667	B	3.144	1.024	Cross	1	Pair of Wire Dog Staples
			F	0.446	0.388	Butt	1	Pair of 3.15d Nails
			D	2.990	2.258	Cross	1	Pair of Wire Dog Staples
			E	1.377	1.197	Cross	1	Pair of Wire Dog Staples
J08C	1	2667	B	2.850	1.028	Cross	1	Pair of Wire Dog Staples
			E	0.427	0.375	Butt	1	Pair of 3.15d Nails
			D	3.138	2.396	Cross	1	Pair of Wire Dog Staples
J08B	1	2667	B	3.144	1.024	Cross	1	Pair of Wire Dog Staples
			F	0.446	0.388	Butt	1	Pair of 3.15d Nails
			D	2.990	2.258	Cross	1	Pair of Wire Dog Staples
			E	1.377	1.197	Cross	1	Pair of Wire Dog Staples
J08A	1	2667	B	3.199	1.362	Cross	1	Pair of Wire Dog Staples
			E	0.414	0.359	Butt	1	Pair of 3.15d Nails
			D	3.100	2.349	Cross	1	Pair of Wire Dog Staples
J08	1	2667	A	5.380	2.377	Cross	1	Pair of Wire Dog Staples
			E	3.855	2.501	Butt	1	JH 47x90
J07C	1	1377	B	2.206	1.414	Cross	1	Pair of Wire Dog Staples
			D	0.402	0.040	Butt	1	Pair of 3.15d Nails
			C	0.758	0.591	Butt	1	Pair of 3.15d Nails
J07B	1	1377	B	2.194	1.550	Cross	1	Pair of Wire Dog Staples
			D	0.646	0.102	Butt	1	Pair of 3.15d Nails
J07A	1	1377	B	2.206	1.414	Cross	1	Pair of Wire Dog Staples
			D	0.402	0.040	Butt	1	Pair of 3.15d Nails
			C	0.758	0.591	Butt	1	Pair of 3.15d Nails
J07	1	1377	B	2.194	1.550	Cross	1	Pair of Wire Dog Staples
			D	0.646	0.102	Butt	1	Pair of 3.15d Nails
J06B	1	2277	B	2.940	1.606	Cross	1	Pair of Wire Dog Staples
			E	1.272	0.779	Butt	1	JH 47x90
			D	0.602	0.543	Butt	1	Pair of 3.15d Nails
J06A	1	2277	B	3.197	2.047	Cross	1	Pair of Wire Dog Staples
			F	1.429	0.853	Butt	1	JH 47x90
J06	1	2277	B	3.197	2.047	Cross	1	Pair of Wire Dog Staples
			F	1.429	0.853	Butt	1	JH 47x90
J05C	2	1567	B	2.348	1.444	Cross	2	Pair of Wire Dog Staples
			D	0.459	0.045	Butt	2	Pair of 3.15d Nails
			C	0.914	0.736	Butt	2	Pair of 3.15d Nails
J05B	1	1567	B	2.339	1.582	Cross	1	Pair of Wire Dog Staples
			D	0.749	0.250	Butt	1	Pair of 3.15d Nails
J05A	1	1567	B	2.348	1.444	Cross	1	Pair of Wire Dog Staples
			D	0.459	0.045	Butt	1	Pair of 3.15d Nails
			C	0.914	0.736	Butt	1	Pair of 3.15d Nails
J05	2	1567	B	2.339	1.582	Cross	2	Pair of Wire Dog Staples
			D	0.749	0.250	Butt	2	Pair of 3.15d Nails
J04C	2	2467	B	3.097	1.654	Cross	2	Pair of Wire Dog Staples
			F	1.404	0.878	Butt	2	JH 47x90
			D	0.643	0.576	Butt	2	Pair of 3.15d Nails
J04B	1	2467	B	3.536	2.193	Cross	1	Pair of Wire Dog Staples
			F	1.796	1.114	Butt	1	JH 47x90

Builders Hardware Company Ltd

Job: 060828
Client: Mike Greer Homes-North Canterbury
Phone:
Site: Baxter & Thomson
7 Swinton Lane Amberley

Description:
Building Consent No.:
Phone:

MiTek 20/20 - Engineering 4.4 Gamma1.5 (build 1597-53) MiTek New Zealand Ltd. Printed: 10:31:16 27 Jun 2008

Truss	Qty	Span (mm)	Joint	Down (kN)	Uplift (kN)	Bearing	Fixing Qty	Fixing Selected
J04A	1	2467	B	3.536	2.193	Cross	1	Pair of Wire Dog Staples
			F	1.796	1.114	Butt	1	JH 47x90
J04	1	2467	B	3.536	2.193	Cross	1	Pair of Wire Dog Staples
			F	1.796	1.114	Butt	1	JH 47x90
J03B	1	1517	B	2.333	1.441	Cross	1	Pair of Wire Dog Staples
			D	0.451	0.045	Butt	1	Pair of 3.15d Nails
			C	0.900	0.722	Butt	1	Pair of 3.15d Nails
J03A	1	1517	B	2.300	1.573	Cross	1	Pair of Wire Dog Staples
			D	0.722	0.212	Butt	1	Pair of 3.15d Nails
J03	1	1517	B	2.300	1.573	Cross	1	Pair of Wire Dog Staples
			D	0.722	0.212	Butt	1	Pair of 3.15d Nails
J02C	1	2062	B	2.739	1.547	Cross	1	Pair of Wire Dog Staples
			D	0.606	0.060	Butt	1	Pair of 3.15d Nails
			C	1.303	1.087	Butt	1	JH 47x90
J02B	1	2062	A	1.797	0.635	Cross	1	Pair of Wire Dog Staples
			D	1.431	0.813	Butt	1	JH 47x90
			C	0.586	0.507	Butt	1	Pair of 3.15d Nails
J02A	1	2062	A	1.793	0.781	Cross	1	Pair of Wire Dog Staples
			D	1.180	0.774	Butt	1	Pair of 3.15d Nails
J02	1	2062	B	2.760	1.700	Cross	1	Pair of Wire Dog Staples
			E	1.046	0.624	Butt	1	Pair of 3.15d Nails
J01B	1	2962	B	3.511	1.786	Cross	1	Pair of Wire Dog Staples
			F	1.734	1.116	Butt	1	JH 47x90
			D	0.762	0.676	Butt	1	Pair of 3.15d Nails
J[redacted]	1	2962	B	4.424	2.752	Cross	1	Pair of Wire Dog Staples
			F	2.999	2.079	Butt	1	JH 47x90
J01	1	2962	B	4.308	2.612	Cross	1	Pair of Wire Dog Staples
			F	2.842	1.895	Butt	1	JH 47x90
*HB08	1	3324						
*HB07	1	5368						
*HB06	1	5130						
*HB05	2	4024						
*HB04	1	984						
*HB03	4	4293						
*HB02	2	2950						
*HB01	2	4993						

Fixing List

Qty	Selected Fixing	Cost
82	Pair of Wire Dog Staples	22.96
30	JH 47x90	25.80
21	CT400	14.91
1	Pair of MultiGrips	0.64
1	CT200 pair	0.72
1	16kN Truss to Top Plate	0.00
34	Pair of 3.15d Nails	3.40
Total [redacted]		68.43

Note:
1) Fixings have been selected based on loading only. Please check that selected fixings are practical for each situation and that appropriate nailing can be applied on site.
2) Fixings are selected from the LUMBERLOK Brochure 03/4 (Timber Connectors Characteristic Loadings Data) with down and uplift characteristic loads of at least the values shown for each joint.

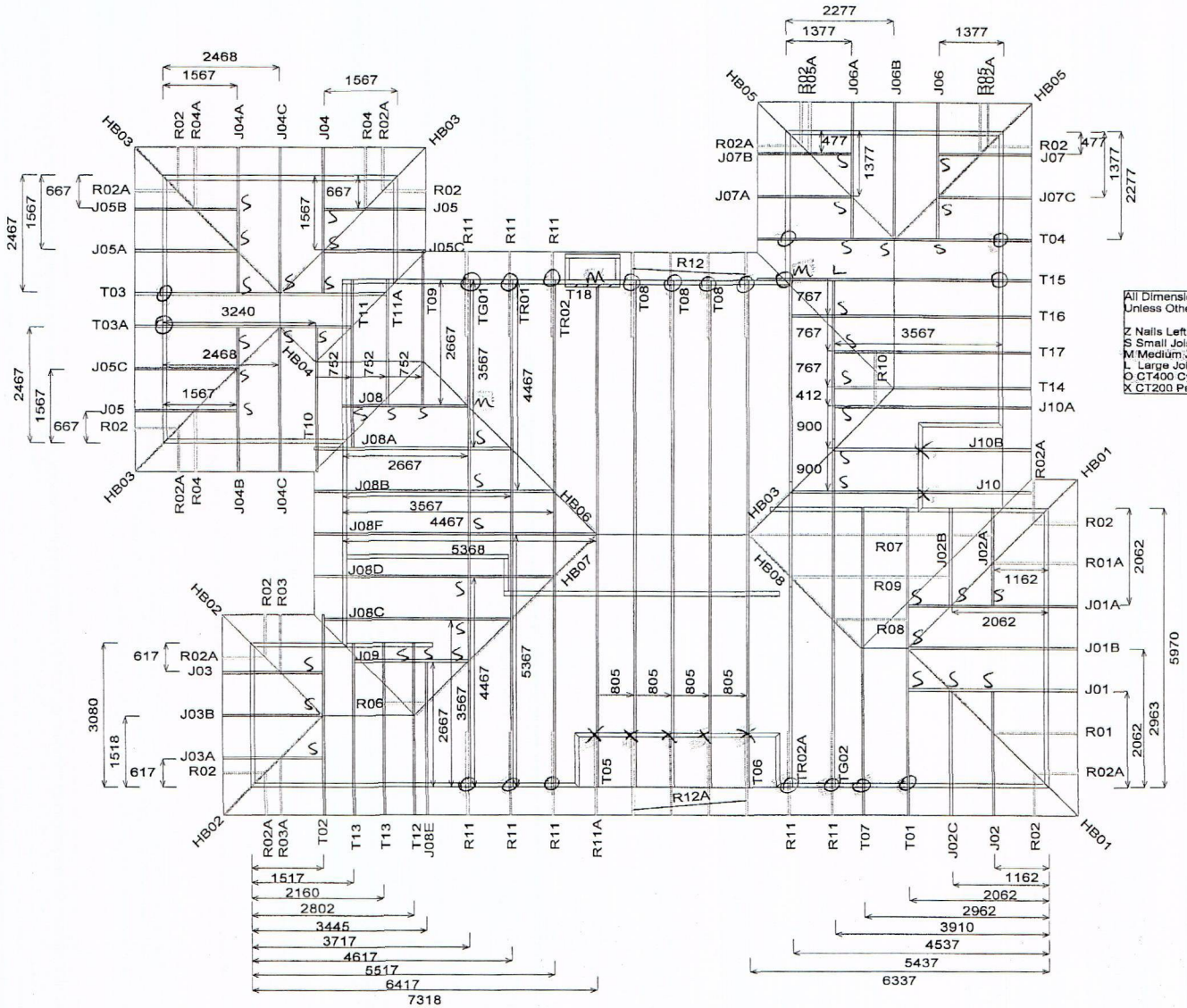

All Dimensions are from Over Plate to the Face of Truss
Unless Otherwise Stated

Z Nails Left	83	Z Nails Right	83
S Small Joisthanger	(47/90)		46
M Medium Joisthanger	(47/120)		3
L Large Joisthanger	(47/190)		1
O CT400 Cyclone Tie			20
X CT200 Pairs			7

Job Details:

Snow Zone:	Christchurch	Snow Altitude:	100 m
Wind Area:	High	Design Wind Speed:	44.0 m/s
TC Restraints:	900 mm	BC Restraints:	600 mm
Roof Material:	Light	Ceiling Material:	Standard
Roof Live Load:	0.250 kPa	Snow Load:	0.550 kPa
Roof Pitch:	28.000 deg	Truss Centres:	900 mm

Builders Hardware Company Ltd

15 Calgary Place
Hornby
Christchurch
New Zealand
Telephone: 03 3444070
Fax: 03 3495325

Name: Mike Greer Homes-North Canterbury
Address: 7 Swinton Lane Amberley

Telephone:

C

Job:
060828

file location: C:\MiTek38\Jobs\060828\

Scale: 1 : 100 | Date: 27/06/2008 | Drawn By Nelson Wormald Adr

HURUNUI District Council

P.O. Box 13
Amberley 7410
NEW ZEALAND
Telephone: (03) 314-8816
Fax: (03) 314-9181
EMAIL: info@hurunui.govt.nz

att. Mike Greer Homes allan Johnson

Rapid No:	Consent No:
1729/7	080237

11478

SITE INSPECTION REPORT

(BAM 214)

Name of Owner/Owner's Agent: Thomson / Baxter

Site Address: 7 Scandon Lane Amb

Description of Consent: New Dwelling + A/Garage

COMMENTS

Tri-Fold now placed @ 900ct

- slab thickening to side garage OK.

- ~~X~~ slab thickening not located under store / living room wall

XO Re-Inspect

Delete that which is not applicable.

Do NOT Pour

INSTRUCTION TO OWNER/OWNER'S AGENT		INSPECTION TYPE
All work inspected is in accordance with the granted Building Consent		Re- slab
Some work is not completed as detailed above and rectification is required		FURTHER INSPECTION
A formal notice to fix will be issued.		REQUIRED YES / ~~NO~~

SIGNED: left on site OFFICER M. Greer DATE 4/7/08

Spoked + phd Mike Greer Homes - 4pm 4/7/08

HURUNUI District Council
P.O. Box 13
Amberley 7410
NEW ZEALAND
Telephone: (03) 314-8816
Fax: (03) 314-9181
EMAIL: info@hurunui.govt.nz

Rapid No:	Consent No:
1729/7	080237

11478

SITE INSPECTION REPORT

(BAM 214)

Name of Owner/Owner's Agent: Thomson / Baxter

Site Address: 7 Scandon Lane Amb

Description of Consent: New Dwelling + A/Garage

COMMENTS

Tri-Folds now placed @ 900ctrs

- slab thickening to side garage OK.

- ~~X~~ slab thickening not located under store / living room wall

to Re-Inspect

Delete that which is not applicable.

DO NOT Pour

INSTRUCTION TO OWNER/OWNER'S AGENT		INSPECTION TYPE
All work inspected is in accordance with the granted Building Consent		Re- slab
Some work is not completed as detailed above and rectification is required		FURTHER INSPECTION
A formal notice to fix will be issued.		REQUIRED YES / ~~NO~~

SIGNED: left on site OFFICER M. Greer DATE 4/7/08

Faxed + phd Mike Greer Homes.

Mike Rowe

From: David Barker [david@smart-sales.co.nz]
Sent: Thursday, 3 July 2008 1:29 p.m.
To: Mike Rowe
Subject: 7, Swindon Lane, Amberley. BC 080237

Hi Mike,
As discussed, please find amended drawing A08a with the polystyrene slab insulation omitted. Please accept this as amendment to the consented drawings.
Regards
David

Smart Plans

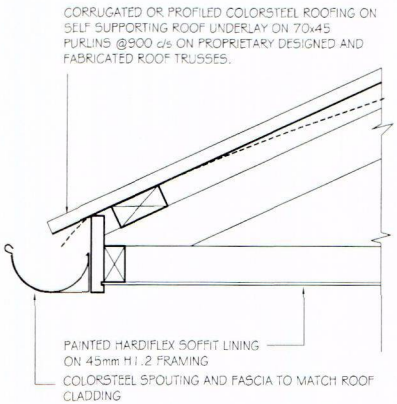

COLORSTEEL FASCIA DETAIL 1:10

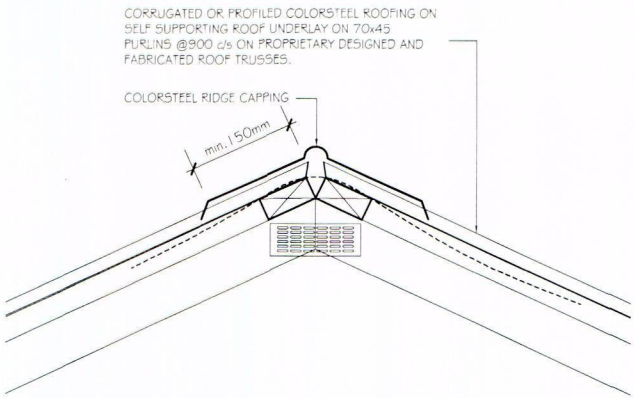

COLORSTEEL RIDGE DETAIL 1:10

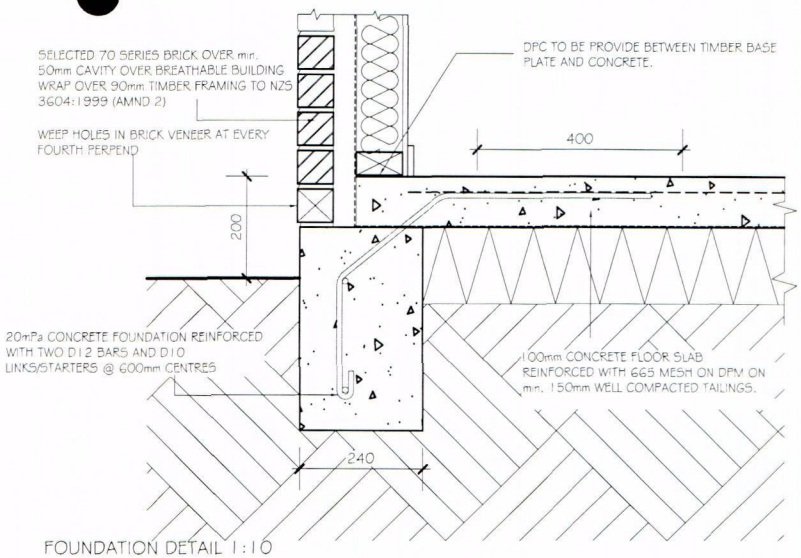

FOUNDATION DETAIL 1:10

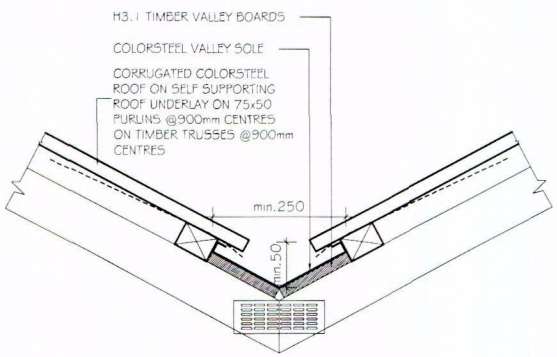

COLORSTEEL ROOF VALLEY DETAIL 1:10

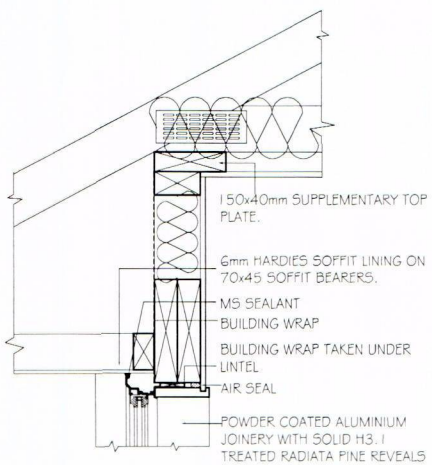

SOFFIT/WINDOW HEAD DETAIL 1:10

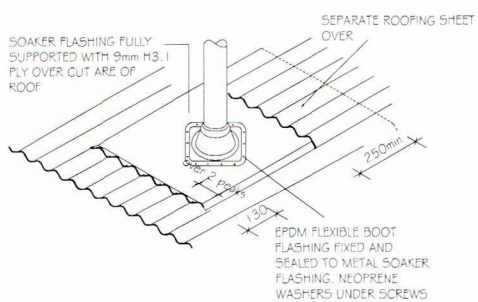

LARGE PIPE PENETRATIONS 1:20

REVISIONS:-

A 3/7/2008 OMISSION OF SLAB INSULATION

mikegreerhomes LTD
© Mike Greer Homes
478 Moorhouse ave
(03) 354 0166
www.mikegreerhomes.co.nz

job title: *Baxter & Thomson House*

drawing title: *Detail Sheet 1*

legal description: *Lot 6 DP 70175, 7 Swindon Lane, Amberley*

Notes
*SUBJECT TO COUNCIL APPROVAL
*ALL MEASUREMENTS TO BE CONFIRMED ON SITE BY CONTRACTOR PRIOR TO THE COMMENCEMENT OF WORK

Scale: *1:10*
Version:
Date of issue: *May 2008*

Job #: N1019
sheet: *A08* A
of: *10*

HURUNUI District Council

P.O. Box 13
Amberley 7410
NEW ZEALAND
Telephone: (03) 314-8816
Fax: (03) 314-9181
EMAIL: info@hurunui.govt.nz

att: Mike Greer Homes

Rapid No:	Consent No:
1729/7	080237

11472

SITE INSPECTION REPORT

(BAM 214)

Name of Owner/Owner's Agent: Thomas / Barton

Site Address: 7 Swindon Lane Amb

Description of Consent: New Dwelling + A/ Garage

COMMENTS sighted:

- polythene vapour barrier fitted, mesh - 665 on chairs
- wastes fitted.

to complete before pouring:

- * 40mm polystrene to be fitted - see amended plan
- * 2 thickenings to be placed.
- * tri-Solds to be placed at max. 900mm &.

Re-Inspection Required

DO NOT Pour

Delete that which is not applicable.

INSTRUCTION TO OWNER/OWNER'S AGENT	✓	INSPECTION TYPE
All work inspected is in accordance with the granted Building Consent		slab
Some work is not completed as detailed above and rectification is required	✓	FURTHER INSPECTION
A formal notice to fix will be issued.		REQUIRED YES / ~~NO~~

SIGNED: left on site OFFICER M.C. Greer DATE 3/7/08

faxed to Mike Greer Homes.
@ 12.30 pm 3/7/08

HURUNUI District Council
P.O. Box 13
Amberley 7410
NEW ZEALAND
Telephone: (03) 314-8816
Fax: (03) 314-9181
EMAIL: info@hurunui.govt.nz

Rapid No:	Consent No:
1729/7	080237

11472

SITE INSPECTION REPORT

(BAM 214)

Name of Owner/Owner's Agent: Thomas/ Baxter

Site Address: 7 Swindon Lane Amb

Description of Consent: New Dwelling + A/ Garage

COMMENTS sighted:

polyethene vapour barrier fitted, mesh - 665 on chairs
wastes fitted.

to complete before pouring:

* 40mm polystrene to be fitted
* 2 thickenings to be placed.
* tri-folds to be placed at max. 900mm &.

Re-Inspection Required

Do NOT Pour

Delete that which is not applicable.

INSTRUCTION TO OWNER/OWNER'S AGENT	✓	INSPECTION TYPE
All work inspected is in accordance with the granted Building Consent		slab
Some work is not completed as detailed above and rectification is required	✓	FURTHER INSPECTION
A formal notice to fix will be issued.		REQUIRED YES / ~~NO~~

SIGNED: left on site OFFICER M.C Rowe DATE 3/7/08

faxed to Mike Greer Homes.

BC Number .....
Rapid Number ...1729/7.....
Inspector's Name .....Mike.....

HURUNUI District Council

INSPECTION PROMPT (BAM 202)
CONCRETE FLOOR SLABS

Time Arrived: **Council Copy Viewed:** yes **Date:** 3/7/08.

Damp Proofing	**N/A**	**Inspected**	**Base Course**	**N/A**	**Inspected**
DPM		250mm.	Material		20/40 tailings
Lapping & Sealing		300mm & taped	Depth		400-500 —
Penetrations		taped.	Compaction		NO
Slab Thickness		100mm +	Vegetation Removed		yes
Reinforcing	**N/A**	**Inspected**	**Thickenings**	**N/A**	**Inspected**
Mesh Size		665	Links		
Lapping		170mm	Horizontal Rods		
Cover		40mm +	Depth		
Supplementary Bars		2 D12.	Width		
Chairs		@ 1.1m² &			
Floor Tie Lapping		600mm			
Floor Ties connected		D10 @ 600 &			
Services			**Other Items**		
Material		uPVC	Bottom plate anchors		
Gradient		1:40 - 1:60	Shrinkage Control		to be cut.
Size		40-100mm	Heating	✓	NO
Sleeving		blue plastic sleeve	Insulation		
Cylinder Drain		over G.T.			

Additional Comments:

N/A = not applicable to project

HURUNUI District Council
P.O. Box 13
Amberley 7410
NEW ZEALAND
Telephone: (03) 314-8816
Fax: (03) 314-9181
EMAIL: info@hurunui.govt.nz

Rapid No:	Consent No:
1729/7	080237

11524

SITE INSPECTION REPORT

(BAM 214)

Name of Owner/Owner's Agent: Thomas / Baxter

Site Address: 7 Swindon Ln Amberley

Description of Consent: Dwelling with A/Garage

COMMENTS

Sited as per plan from survey pegs 1.530m and 5.800mm

Top Vegetation removed from site

250mm wide founds x 350-400 deep to a clay footing

2 x D16 R Rods, on chairs, with D10 floor slab starters x 600 ctrs.

* To Complete

Boxing and steel placement.

Delete that which is not applicable.

INSTRUCTION TO OWNER/OWNER'S AGENT		INSPECTION TYPE
All work inspected is in accordance with the granted Building Consent	✓	Foundation
Some work is not completed as detailed above and rectification is required		FURTHER INSPECTION
A formal notice to fix will be issued.		REQUIRED YES / NO

SIGNED: left on site OFFICER J W Arthur DATE 24/6/08

BC Number 080237

Rapid Number 1729/7

Inspector's Name ..... John

HURUNUI District Council

INSPECTION PROMPT (BAM 201)
CONCRETE FOOTINGS AND FOUNDATION WALLS

Time Arrived: **Council Copy Viewed:** **Date:** 24 6 08

Site Factors	N/A	Inspected	Steel Work	N/A	Inspected
Survey Pegs		sighted.	Horizontal Rods		2 x D16
Distance to Boundary		1.530 e 5.800	Vertical Rods	✓	
Site Stability		Good	Starters/Floor Ties		D10 x 600 @ 5
Ground Bearing		clay	Steel Identified		yes
Vegetation Clear		yes	Bottom Cover		75mm
FFL		* 150mm	Side Cover		100mm
			Lapping		6-700mm
			Tying		tie wire

Excavations	N/A	Inspected	Other Items	N/A	Inspected
Depth		350 - 400	Waste Ducts	/	
Width		250mm	Steel Around Blockout	-	
Formwork		Boxing	Drains under Building	/	
Level Bottom		yes	Subfloor Ventilation	/	
Stepped Foundations		No	Engineer Design	/	

Additional Comments:

N/A = not applicable to project

Building consent 080237

Section 51, Building Act 2004 (BAM 005)

THE BUILDING

Street address of building: 7 SWINDON LANE, AMBERLEY

Legal description of land where building is located: LOT 6 DP 79189 BLK VIII TEVIOTDALE SD

Valuation number: 2143011114

THE OWNER

Name of owner: J Thomas & H Baxter

First point of contact for communications with the council/building consent authority:
Full Name: Mike Greer Homes North Canterbury

Mailing Address: P O Box 421, Rangiora

BUILDING WORK

The following building work is authorised by this building consent:

Project: Dwelling with attached garage and gas fire

Current, lawfully established, use: SH

This building consent is issued under section 51 of the Building Act 2004. This building consent does not relieve the owner of the building (or proposed building) of any duty or responsibility under any other Act relating to or affecting the building (or proposed building).

This building consent also does not permit the construction, alteration, demolition, or removal of the building (or proposed building) if that construction, alteration, demolition, or removal would be in breach of any other Act.

CONDITIONS OF BUILDING CONSENT

This building consent is issued subject to the following conditions:

1. A minimum of 24 hrs notice must be given to the Building Officer prior to any inspections.
2. All construction and fixings are to be in accordance with NZS 3604:1999 and the requirements of the NZ Building Code 1992 and subsequent amendments.
3. At least one copy of the approved plans and specifications must be kept on site at all times and made available to the Building Control Officer on request.
4. All building elements are to comply in strict accordance with the NZ Building Code and subsequent amendments.
5. It is the applicant's responsibility to ensure that all buildings are located within the site in accordance with the plans submitted. We recommend you engage a surveyor if you are unsure of the boundary location.
6. The building is not to be located over any existing drainage lines without prior approval of the Senior Building Officer.
7. F7 of the New Zealand Building Code requires appropriate means of detection and warning of fire (smoke alarms) must be provided within each household unit
8. be provided to resist seismic loading and dislodgement of appliance. (Bolt fixing to hearth)
9. ALL BOUNDARY SITE PEGS ARE TO BE CLEARLY DEFINED AND FLAGGED PRIOR TO THE WORK COMMENCING, AND BE VISIBLE FOR THE BUILDING OFFICER AT THE TIME OF THE FIRST INSPECTION.
10. CONDITIONS OF THE BUILDING CONSENT AND/OR DOCUMENTS MUST BE DRAWN TO THE ATTENTION OF THE SUBCONTRACTORS.
11. Under section 52 of the Building Act 2004 a building consent will lapse in 12 months from date of issue if the building works concerned have not been commenced
12. On completion and testing forward copies of the Electrical and Gas Certificates to Council

Compliance schedule

A compliance schedule is not required for the building.

Attachments

Copies of the following documents are attached to this building consent:

Project information memorandum 080237

Development contribution notice

Signature _____ Position Customer Services Building Officer

On behalf of: Hurunui District Council Date: 10/06/08

Project Information Memorandum 080237

Section 34, Building Act 2004 (BAM 005-B)

Issued in accordance with Building Consent No. 080237

This project information memorandum is confirmation that the proposed building work may be undertaken, subject to the provisions of the Building Act 2004, and any requirements of the building consent attached.

This project information memorandum includes:

___ Details of authorisations which have been granted

1. This is a permitted activity under the Hurunui District Plan
2. The following Development levies apply:
    a. District Library 400.00
    b. Amberley Stormwater 660.00
3. The construction must withstand the following:
    a. High Wind speeds of 44m/s
    b. Earthquake zone A
    c. Snow loading zone 4 Altitude 46m
4. To connect to Council Sewer and Water Schemes - fees of $50 and $450 apply.
5. The water connection fee provides for a pipe installation from the main line to the property (up to a distance of 4 metres)a toby box, valve and water meter, and footpath reinstatement if required. Council advises applicants to install their own gate valve on their side of the water meter. (Section D 11.3 HDC Water Supply Network Contract Conditions for Consumers November 1999 Version.1.0) For distances over 4 metres a Works Order Form will be required with this application for Council staff to install the additional water lines. These lines may however be installed by the applicant using Council approved pipe & fittings.
6. Generally each property has a lateral from the sewer main to the boundary provided it was included in the original scheme. Most subdivisions since that time have also had the property connected to as far as the boundary from the main sewer line. However in the instance where this is not provided e.g. Cheviot Township or where a different connection point is chosen then the full cost of connection to the sewer main will be met by the applicant. A registered drain layer to the satisfaction of the District Drainage Inspector will do this work to CDB DS 78. It will generally be done when the remainder of the sewer line on the property is installed. NB: if the lateral to which this application applies is not within private property and excavation of the Road Reserve is required then a Road Opening Permit must be applied for.

Signature _____ Position Customer Services Building Officer

On behalf of: Hurunui District Council Date: 10/06/08

Development contribution notice 080237

Section 36, Building Act 2004 (BAM 003)

To: J Thomas & H Baxter, 9 Brighton St, Amberley

A code compliance certificate for the building work referred to in the attached project information memorandum will not be issued until a development contribution of $1,060.00 is paid. The development contribution must be paid to Hurunui District Council, PO Box 13, Amberley.

If the development contribution is not paid,—

(a) the Council may, under section 208(b) of the Local Government Act 2002, withhold the code compliance certificate that would be issued under section 95 of the Building Act 2004:

(b) the building consent authority, under section 94(4) of the Building Act 2004, must refuse to issue a code compliance certificate for the building work until it has received—

  (i) evidence that the development contribution has been paid or made by the owner to the Council; or

  (ii) a copy of a written agreement between the owner and the Council that the code compliance certificate may be issued:

(c) the Council may, under section 208(d) of the Local Government Act 2002, register the development contribution under the Statutory Land Charges Registration Act 1928 as a charge on the title of the land in respect of which the development contribution was required.

Signed _____ Position Customer Services Building Officer

On behalf of: Hurunui District Council

Date: 10/06/08

Mike Greer Homes North Canterbury
P O Box 421
Rangiora 7400

Customer No BC080237
Date 10/06/08

GST Reg No 53-915-477

Tax Invoice 72769

080237 : 7 SWINDON LANE, AMBERLEY
Dwelling with attached garage and gas fire
Owner: J Thomas & H Baxter

Consent Processing fee	443.35	*
File establishment fee	155.00	*
BRANZ levy	260.00	OG
DBH Levy	512.20	*
Pre Stop	90.00	*
Preclad	90.00	*
Framing	90.00	*
Concrete Inspections 2	180.00	*
Pre-line inspection including plumbing	130.00	*
Plumbing and/or drainage inspection	90.00	*
Final inspection - dwelling	130.00	*
Planning/PIM Processing	220.00	*
Water Connection	450.00	*

Continued...

Mike Greer Homes North Canterbury
P O Box 421
Rangiora 7400

Customer No BC080237
Date 10/06/08

GST Reg No 53-915-477

Tax Invoice 72769

Sewer Connection		50.00 *
Amberley Stormwater		660.00 *
District Library		400.00 *
BCA Levy		78.00 *
	BEFORE GST	**3,609.84**
(* Includes GST)	**GST**	418.71
	Sub Total	**$4,028.55**
	Cash Received	675.00CR

Total incl GST 3,353.55

Mike Greer Homes North Canterbury

Customer No BC080237
Date 10/06/08
Invoice No 72769
Total Due 3,353.55

1729/7

HURUNUI District Council

PROCESSING FOLDER BUILDING DEPARTMENT
(BAM005-F)

Valuation Number:	Confidential:	Zone:
21430 11114		Residential

PROJECT DETAILS:	
Applicant:	J Thomsone H Baxter
Address of Proposed Work:	7 Swindon Lane Amberley
Nature of Building Work:	Dwelling with attached garage egcsitino
BC Number:	0 80237

PIM	BC	JOINT PIM / BC

(1) BUILDING	PIM Date:	BC Date:	Signature:
		4-6-08	[signature]

BC BC2 BC3 BC4 BP DL FA F12 LAPS
S1 S12

On Completion & testing forward copies of the Electrical and Gas Certificates to Council.

Wind:		Earthquake:		Hazard:	
Medium	☐	A	☑	No Information	☑
High	☑	Specific Design	☐	Flooding	☐
Very High	☐	Snow Loading:		Instability Zone	☐
Specific Design	☐	3	☐	Filled Ground	☐
		4	☑	Public Drains	☐
		Altitude: 46 m		Other	☐

Verified by: L.B. Roberts Date: 5/6/2008

(2) PLANNING:	PIM Date: 28/05/08	BC Date: 28/05/08	Signature:

- Permitted Activity
- Dev levies:
  - D.C
  - Amb Stormwater

(3) UTILITIES:	PIM Date: 26/5/08	BC Date: 26/5/08	Signature:

- Map attached.
- HDC water + Sewer connections available to apply for connections - have attached.
-

(4) ENGINEERING/HEALTH:	PIM Date:	BC Date:	Signature:

HURUNUI
District Council

FILE PROCESSING - TIME SHEET
BUILDING DEPARTMENT
(BAM 005-G)

All time charged to this BC must be noted below on this form.

TIME SHEET

Officer	Process	Date	Time
CSB	file Estab	23.5.08	20
NB	process consent documents	4-6-08	3.0 (180)
BOC	Verify	5-6-2008	36
CSB	Issue	10.6.08	30
		Total Time	266

$443.35

Amendment Cost Code

Planning: 133001561
Building: 13500141

INSPECTIONS

Inspections	Cost All Other	Cost Amberley	No. required
Concrete pre pour	$120	$90	2
Framing check	$120	$90	1
Pre Clad &/or Half Height	$120	$90	1
Pre-line including plumbing	$160	$130	1
Pre-line (minor – no plumbing)	$120	$90	
Pre-Stop	$120	$90	1
Plumbing and/or drainage	$120	$90	1
Final (major) – Dwelling, commercial or similar	$210	$130	1
Final (minor) – Alterations / additions or similar	$160	$115	
Re-inspection	$120	$90	

8

CHECKLIST – FORMALLY RECEIVING BC

- ☑ Building Consent Form (signed and correctly completed)
- ☑ PIM Form Completed
- ☑ Certificate of Title (less than 6 months old and relevant)
- ☐ Deposit supplied or calculation sheet produced

- ☑ 2 copies of all information (minimum)
- ☑ Site Plan - boundaries
  - coverage
  - distances
- ☑ Construction Details
- ☑ Cross Sections
- ☑ Bracing Schedule (Earthquake zone A, wind zone high)
- ☑ Risk Matrix
- ☐ Specifications
- ☑ Floor Plan
- ☐ Producer Statement (appropriate to site, by qualified person, appropriate to the drawings produced).
- ☐ Any relevant Resource Consents

Signature: _____ Date: 23-5-08

KEY: √ = Received
X = Missing or inaccurate
--- = Not Applicable

BC Number 080237

Project New dwg w att garage

Name & Rapid Number Thomson / Baxter 1729-7

HURUNUI District Council

BUILDING CONSENT PROCESSING SHEET
RESIDENTIAL/HABITABLE (BAM 100)

Building Elements		Items To Be Checked	Checked	Not Applicable	Comments Including Means of Verifying, Endorsements, Conditions & Requirements
General Information	Ownership	Property Ownership / CT	✓		CT clear
		2+ Allotments: Sect 75 / Amalgamation		✓	
	Positioning	Siting	✓		1.5 to bdy N.
		Snow zone	✓		Zone 4 < 200
		Corrosion zone 1/2/3	✓		Zone 1
		Wind speed	✓		44 mps = high
		Earthquake zone	✓		Zone A
		Site specific requirement		✓	
	Location	Contours/ Levels/ Datum	✓		Site plan shows levels
		Proposed building/s	✓		dwg
		Existing buildings/s		✓	
		Any easements	✓		clear
	Engineering	Hazards on site/S71		✓	
		Section 72 : Land Subject to erosion, etc		✓	
		Flood prone site MIN FFL.....		✓	
		Ground bearing	✓		expected good ground.
	General	Fault Lines		✓	
Specific Design	Producer Statement	Engineer's name and qualifications		✓	
		PS1 or similar, format and correctness		✓	
		Producer Statement Scope		✓	
	Items Covered	All or parts		✓	
	Monitoring Schedule	Items covered		✓	
Specification	Content	Correct / up-to-date / relevant	✓		full content
Elevations		Claddings / openings / downpipes	✓		DPs upto 50m² catchment.
Foundations	Concrete Foundations	Depth / width	✓		240w x 300 into ground
		Reinforcement / Cover	✓		50-75

Building Elements		Items To Be Checked	Checked	Not Applicable	Comments Including Means of Verifying, Endorsements, Conditions & Requirements
Floors	Floor Levels	Masonry 150 (FGL) 100 (Paving) ~~Other 225(FGL) 150 (Paving)~~	✓		200
	Concrete Slabs	Thickness / Load bearing	✓		100 ~ w FSI LBW
		Compacted fill / DPM	✓		150 ~ compacted. Poly DPM
		Reinforcing – Mesh, Cover, Bars & Supports	✓		665 w 30 cover.
		Tanking: Wall DPC: Top edge sealing	✓		DPC w DPM up slab edge.
		Blockwork: Steel & foundations 4229		✓	
		Shrinkage Control	✓		Cuts & supplementary Bars
	Timber Floors (Including Decks)	Bearer Size, span, spacing			
	(Including Decks)	Joist size, span, spacing			
		Load bearing walls on floors. Distance to supports			
		Lateral support or Blocking			
		Sub Floor Insulation & protection			
		Flooring Material			
		Ground Clearances & ventilation			
	Pile Foundations	Pile types			
		Pile size, span, spacing			
		Pile to bearer fixings			
		Sub floor bracing			
Roofing	Roofing	Pitch / Roofing Underlay	✓		28°
		Roof: Truss Design & Layout	✓		Mitek 20/20.
		Rafters and framing		✓	
		Point loads	✓		Reinforced foundation
		Roof bracing	✓		Truss detail - hip/valley
		Roof Gutters	✓		no internal
		Skillion roofs		✓	
		Flat roofs / substrate and membrane		✓	
		Roof penetrations and flashings	✓		Chimney flashing & Boots.
		Snow boards E2.3.1 > 30m above SL		✓	no internals

Building Elements		Items To Be Checked	Checked	Not Applicable	Comments Including Means of Verifying, Endorsements, Conditions & Requirements
Framing	Timber Framing	Timber Quality (Grade / Treatment)	✓		H1.1-H1.2-H3.1 to 3602
		Stud Height, size, spacing	✓		2.4 SS
		Plate Fixings	✓		Truebolts @ 1.2 ctrs
		Truss to plate fixings	✓		2 nails 3 Z's + CT's
		Bottom Plate DPC	✓		3ply bituminous
		Lintel and beam size, span	✓		3604 - Miltek 20/20 + F.B.X
		Lintel point loads	✓		Perimeter foundation
		Post fixings, top & Bottom		✓	
		Beam size & fixing	✓		Flitch 20 over garage door double studs
		Wall Bracing & calculations	✓		Correct.
		Wall / Ceiling Insulation	✓		R3.6 - R2.6 - R1.3 floor.
		Ceiling framing/battens	✓		70x35 @ 400 crs
		Purlin size, span, spacing	✓		90x45 @ 900 & 700 to P.
		Purlin fixings	✓		M & P detail.
		Ridge Beams and support		✓	
		Lower level deck framing & floor		✓	
		Upper storey floor framing		✓	
		Upper level deck framing		✓	
Claddings		Type claddings	✓		Brick & Poly
		Risk matrix	✓		LS
		Cavity	✓		Both @ 50 & 20.
Cavity	Flashings	Wall, windows, junctions, parapet etc	✓		E2/AS1
		Building Wrap & flexi tape			E2/AS1
		Cladding/control joints	✓		Clambrackets
Internal Finishes	Internal Wet Areas	Linings	✓		Aqualine
		Showers/tanking	✓		Fibrous area system
Plumbing & Drainage	Water System	Potability of water supply	✓		Nu-O.
		HWC and valving incl. temp. valves	✓		T.&V. + full kit.
	Solar water heater	Installation and valving to NZS4614		✓	
		Producer Statement (form D2 out of COP solar heaters)		✓	
	Waste pipes	G13 or AS 3500	✓		
		Fixtures per Waste	✓		<4
		Waste Pipes Size/Gradient	✓		1:40 @ 40Ø 1:20 @ 32Ø
		Waste venting, antisiphonage	✓		1 x AAV
	Drainage	Drain Size, Gradient, Depth, Cover	✓		100Ø @ 1:100 ok.
		Septic tank or AWTS Register No.		✓	
		Loading on existing system		✓	
		Down pipes & stormwater disposal	✓		6 x DPs to MAX 50m² to soakage
		Surface water / Channel/ Sumps/Subsoil drains-sumps		✓	
Blockwork	Block Walls	Design/Reinforcing		✓	
	Openings	Lintels		✓	

Building Elements		Items To Be Checked	Checked	Not Applicable	Comments Including Means of Verifying, Endorsements, Conditions & Requirements
General Items	Ventilation	General	✓		5% exceeded
	Stairways	Landings / Handrails / Safety Barriers			
		Anti-slip D1/AS1/Table2			NA.
		Stair Dimensions/Pitch			
		Handrails			
		Head clearance			
	Windows / Doors	Glazing	✓		4223 incl M3 & H1
		Opening restrictors		✓	
	Decks	Construction		✓	
		Step down to deck		✓	
		Drainage & gutters		✓	
		Cladding clearance		✓	
		Stormwater overflow relief		✓	
		Substrate		✓	
		Decking material		✓	
		Deck weatherproofing		✓	
		Barriers		✓	
	Smoke Alarms	Type / Location	✓		x2 located at:
		Fire separation/travel	✓		<24m Permissible
	Gas appliances	Safety precautions (shields etc)	✓		
		Ventilation	✓		doors bi-fold & windows
Fires	Location	Location In Building			
	Manufacturers Instructions	Instructions provided			
	Second Hand appliances	Age of appliance & safety report			NA.
Alternative Solutions		Items identified			
		Appeals and test results			
External Works	Retaining Walls	Siting/surcharge			
		Footings & Construction			
		Subsoil Drainage			
	Ground works	Surface water control	✓		to road side off drive
		Any excavation works & fill		✓	
		Driveway construction	✓		no detail
Additional Comments					

Signed:	Dated: 4-6-08.

INTERNAL PIM CHECKLIST (BAM005-R)

Applicant Thomson & Baxter **BC** 080237

Project Location 7 Swindon Lane, Ambosley

Nature of Work Dwelling with attached garage.

	Complies	Comments
Planning Maps :		
Zone	Res	
Minimum site area per dwelling	✓	1260m2.
Significant Natural Area	—	
Outstanding Landscape	—	
Notable Trees	—	
Heritage Buildings / Archaeological Site	—	
Power transmission lines	—	
Slope Hazard or Coastal Hazard	—	
Fault lines	—	
Coastal Environment	—	
Flooding / Ponding / Inundation	—	
Title :	✓	
S221 Consent Notice	—	
Easements	✓	
Environment Canterbury : Hazard Register	—	
General Management:		
Within 50m forestry	✓	
Earthworks	✓	
Intensive Farming Activity	✓	
Within 500m of quarrying activity	✓	
Min separation distance / Setback roads	—	
Visible on a ridgeline	—	
Continuous linear length	—	

Accessway	✓	RC970232.
Urban :		
Minimum area requirement	✓	
Setback	✓	
Site coverage	✓	16%
Height	✓	
Recession plane requirements	✓	
Continuous linear length	✓	
Other	✓	
Hanmer Design Standards :		
Height		
Window orientation		
Garaging		
Dwelling frontage		
Roof pitch		
Cladding		
Colours		
Development Contributions :		
Queen Mary Land Purchase		
Queen Mary Site Development		
District Library	✓	
Amberley Domain Pavilion Development		
Omihi Domain Netball Court Dev.		
Conical Hill Walkway Development		
Amberley Water Supply		
Amberley Sewer System		
Amberley Stormwater	✓	
Hanmer Springs Water Supply		
Hanmer Springs Sewer System		
Hanmer Springs Stormwater		
Ashley Water Supply		
Hanmer Springs Medical Centre		
Hanmer Springs Hall Development		
Hanmer Springs Town Centre Dev.		

Notes :

HURUNUI District Council

Project Information Memorandum and / or Building Consent Application (BAM 002)

Project No.

(Only complete items within the shaded panels that are applicable to your project)

APPLICATION

I request that you issue a: ☐ Project Information Memorandum only(PIM)

☐ Building Consent only (for existing PIM No : _____ attach copy)

☑ Building Consent (including Project Information Memorandum).

THE BUILDING

Street Address: (or Rapid Number if applicable)	Number of Levels:	Level/Unit No:
7 Swindon Lane, Amberley	1	—
Legal Description: Lot 6 DP 70175	Total Floor Area: (all floors included) Existing _____ m^2 Add 203 m^2	
Valuation Roll Number:	Current lawfully established use: —	
Building Name (if applicable)	Approximate year building was first constructed: —	

THE PROJECT

Description of Building Work: Dwelling with attached garage and gas fire.
(eg dwelling, commercial, farm shed, garage etc)

Will the building work result in a change of use of the building? ☐ Yes ☑ No

(Refer to Building (Specified Systems, Change of Use, and Earthquake-prone Buildings) Regulations 2005 if in doubt)

If "Yes", provide details of the new intended use

_____

Intended life of the building:

☑ Indefinite but not less than 50 years

☐ or Specified as _____ years

List Building Consents previously issued for this building (if any): (ie, is this project being constructed in stages?, Is this consent for a relocated or transportable building?)

—

Estimated Value (inc GST) $ 260,000
(ie, the estimated aggregate of the values of all goods and services)

THE OWNER		AGENT – APPLICANT	
Owner's Name: Jon Thomson and Hannah Baxter		Agent's Name: Mike Greer Homes North Canterbury	
Contact Person: (if owner is not an individual)		Contact Person: Mike Flutey.	
Mailing Address: 9 Brighton St, Amberley		Mailing/Billing Address: P.O Box 421 Rangiora	
Street Address/Registered Office		Street Address/Registered Office 2 Johns Road Rangiora	
E-mail Address:		E-mail Address: mikef@mikegreerhomes.co.nz.	
Phone Numbers:		Phone Numbers:	
Daytime: 3148335	Mobile:	Daytime: 3130319	Mobile: 021758767
After Hours:	Fax:	After Hours:	Fax: 3130321

Evidence of ownership attached to this application:

☑ Certificate of Title

☐ Sale and Purchase Agreement

Note - The Agent will be the first point of contact for communications with the Council/Building Consent Authority regarding this application / Building Work and will receive all correspondence including all invoices.

REQUIRED ATTACHMENTS

Complete and attach **ONE** of the following checklists, and provide **ALL** of the information, and plans requested on that checklist:

☐ Form 002-T Temporary work ☑ Form 002-R Residential work ☐ Form 002–I Commercial/Industrial work

Application Fee (Deposit)

☐ Application Fee of $ 675 (refer to cover sheet for appropriate fees)

KEY PERSONNEL

Name of Builder:	Phone Number:
Postal Address: SEE ATTACHED.	
	Registration Number:
E-mail Address:	
Name of Craftsman Plumber:	Phone Number:
Postal Address:	
	Registration Number:
E-mail Address:	
Name of Craftsman Gasfitter:	Phone Number:
Postal Address:	
	Registration Number:
E-Mail Address:	
Name of Registered Drainlayer:	Phone Number:
Postal Address:	
	Registration Number:
E-mail Address:	
Name of Designer:	Phone Number:
Postal Address:	
	Registration Number:
E-mail Address:	
Name of Engineer:	Phone Number:
Postal Address:	
	Registration Number:
E-mail Address:	

SIGNATURE

Signed by or for and on behalf of the Owner: M.J.Bell

☐ Owner ☑ Agent Date: 23.5.08.

Note: If acting "for and on behalf", please read the following declaration before signing:
"I hereby declare that I am authorised to act as Agent of the Owner".

Notes by applicant: (Other notes or comments which you as the applicant may wish to add)

CODE COMPLIANCE

Complete as far as possible in all cases

(Give names, addresses, and telephone numbers. Give relevant registration numbers if known)

BUILDER

Name: Mike Greer Homes North Canterbury Reg. N°:

Address: PO Box 421 Rangiora

Phone N°: 313 0319 Fax N°: 313 0321 Email: mike@mikegreer homes.co

DESIGNER(S)

Name: Andrew Brian Lill Reg. N°:

Address: Po Box 21-151 Christchurch

Phone N°: 354 0166 Fax N°: 354 0167 Email:

REGISTERED DRAINLAYER

Name: Flo Rite Drainage Reg. N°: 1369179

Address: 66 Butler Street Christchurch

Phone N°: 3315455 Fax N°: 3315412 Email:

CRAFTSMAN PLUMBER

Name: Peter Diver 15396 Michael Reg. N°: 02921 Peter

Address: 44 Maces Road Christchurch

Phone N°: 354 8111 Fax N°: 354 8748 Email:

CRAFTSMAN GASFITTER

Name: Andrew Sothen (Laser Plumbing) Reg. N°: 10353.

Address: Nayland Street Christchurch

Phone N°: Fax N°: Email:

REGISTERED ELECTRICIAN

Name: Tim Nimmo (Divine electrical) Reg. N°:

Address: 117 Francis Avenue Christchurch

Phone N°: 027 696 0762 Fax N°: Email:

STRUCTURAL ENGINEER

Name: ~~Eric Spence~~ Connell Wagner. David Elliot Reg. N°: 202002.

Address: PO Box 2373

Phone N°: 03 792 734 Fax N°: 03 379 1649 Email:

OTHER CONTRACTOR – TYPE:

Name: Reg. N°:

Address:

Phone N°: Fax N°: Email:

HURUNUI
District Council

Project Information Memorandum Declaration
BAM002-P

In order for the Council to issue a Project Information Memorandum that clearly identifies the restrictions that relate to the proposed building project, the Council requires basic information with respect to the requirements of the District Plan. As such the applicant (or applicants agent) of a PIM is required to complete the relevant sections of this declaration form. Please note that it is important that the applicant provide correct information in order for the Council to provide an accurate Project Information Memorandum.

Applicant's Name	Jon Thomson and Hannah Baxter.
Project Location	7 Swindon Lane, Amberley
Proposal	Dwelling.

Please answer the following questions by marking the relevant box.

1. Will the proposed building be located within 50 metres of a forestry plantation on a separate lot under different ownership?

   Yes ☐ No ☑

2. Will the proposed building require earthworks to be carried out within 20 metres of any river, 50 metres of any wetland, or 100 metres from any lake? River for the purpose of this rule means any river or stream with a normal channel width flow of greater than 1.5 metre average over the reach of the river between a point of 40 metres upstream and a point of 40 metres downstream from that point of the river adjacent to where the proposed earthworks are to be located.

   Yes ☐ No ☑

3. Is the site of the proposed building located within an Urban area?

   Yes ☑ (Go to Q14) No ☐ (Go to Q4)

4. Will the proposed building be located within 500 metres of an intensive farming activity or within 500 metres of a sewage treatment facility, including effluent ponds for on-farm waste disposal and land based effluent disposal areas located on a separate lot under different ownership? Intensive farming means plant or animal production predominately independent of a site's soil characteristics, or of feed produced onsite.

   Yes ☐ No ☐

5. Will the dwelling be located more than 500 metres from the resource consent area for a commercial quarry or mine?

   Yes ☐ No ☐ N/A ☐

6. Will the building be located within 100 metres from dwellinghouses and principal buildings on a separate lot under different ownership?

   Yes ☐ No ☐

7. Will the building be located on a ridgeline so that it is visible against a dackdrop of sky when viewed from any point within 1 kilometre from any strategic arterial, district arterial, collector or Lake Sumner Road (including unformed sections)? Strategic arterial, district arterial and collector roads are listed on page 4.

   Yes ☐ No ☐

8. If the proposal is for a new dwelling, will the water supply be provided by a Council water scheme?

   Yes ☐ No ☐ N/A ☐

9. Will the activity require a new accessway to be formed? An accessway refers to the area between the existing road formation and the property boundary within the road reserve intended for use by vehicles accessing and departing the site.

   Yes ☐ No ☐

10. Does the proposed new accessway or existing accessway adjoin a **strategic arterial** or **district arterial** road as listed on page 4?

    Yes ☐ (Go to Q11) No ☐ (Go to Q13)

11. Does the accessway meet the standards for distances, clearance from intersections and minimum access spacing as set out in Table 1?

    Yes ☐ No ☐

Table 1. Property access performance standards where traffic generation is up to 100 equivalent car movements per day

Posted (legal) speed limit (km/h)	Required sight distances (m) – see Figure A5.2	Location of property access relative to intersection – see Figure A5.3:		Minimum spacing between adjacent property access (on same or opposite frontages) – distance N on Figure A5.3(m)
		Minimum distance K(m)	Minimum side road distance M(m)	
50	140	30	20	–
60	175	50	30	–
70	210	100	45	40
80	250	120	60	100
100	330	200	60	200*

Note: *There shall be no more than 5 individual accesses along any 1km section of State Highway (on both sides) measured 500m either side of a proposed access.

12. Does the **existing** accessway meet the accessway and construction standards shown in Figure A5.5 on page 8 and Figure A5.9 on page 9?

Yes ☐ No ☐ N/A ☐

Go to Q16 after completing question 12.

13. Will the accessway meet the minimum sight distances as shown in Table 2 below?

Yes ☐ (Go to Q16) No ☐ (Go to Q16)

Table A5.2 – Minimum sight distances to accessways with less than 100 equivalent car movements per day

Posted legal speed limit	Minimum sight distance (m):	
	Local roads	Collector roads
50	40	45
60	55	65
70	85	85
80	105	105
100	160	160

14. Will the activity require a new accessway to be formed? An accessway refers to the area between the existing road formation and the property boundary within the road reserve intended for use by vehicles accessing and departing the site.

Yes ☑ (Go to Q 16) No ☐ (Go to Q 15)

15. Does the existing accessway meet the construction standards shown in Figure A5.4 on page 7?

Yes ☐ No ☐

16. Is the proposed building located within the Hanmer Basin Management Area?

Yes ☐ (Go to Q 17) No ☑ (Sign the declaration on page 4)

17. Please provide details as to the exterior cladding to be used on the building.

Cladding materials _____

18. Provide details on the proposed colours of the walls, roof and trim quoting British Standard numbers.

Walls _____

Roof _____

Trim _____

DECLARATION

I declare that the information provided on this form is correct. I understand that if I provide false or misleading information, then the Project Information Memorandum issued by the Council may provide incorrect information with respect to compliance of the project with the District Plan.

Signature _____ Date 22.5.08.

Strategic arterial roads within the Hurunui District:

Ashworths Road (SH1)
Culverden Road (SH7)
Domett Road (SH1)
Glasnevin Road (SH1)
Greta Road (SH1)
Hanmer Springs Road (SH7A)
Hundalee Road (SH1)
Inland Road
Karaka Road (SH7)
Lewis Pass Road (SH7)
Mouse Point Road (SH7)
Omihi Road (SH1)
Parnassus Road (SH1)
Rotherham Road North (SH7)
Rotherham Road South (SH7)
Waipara Flat Road (SH7)

District arterial roads within the Hurunui District:

Balcairn Amberley Road
Flintoff Mouse Point Road
Hawarden Waikari Road
Lawcocks Road
Leader Road East
Leader Road West
Scargill Valley Road
Waikari Valley Road

Collector roads within the Hurunui District:

Allandale Road
Balmoral Station Road
Claverley Rd (between SH1 Conway Flat Rd)
Gore Bay Road
Hursley Terrace Road
Leithfield Road
Lake Sumner Road (between Horsley Downs Rd and Powers Road)
Motunau Beach Road
Mt Palm Road
Pyramid Valley Road
Ram Paddock Road (between the Mt Brown Rd and Georges Rd)
School Road
Stonyhurst Road (between SH1 and Blythe Rd)
Top Pahau Ford Road
Amberley Beach Road
Douglas Road
Gemmells Road
Horsley Downs Road
Kings Road
Leslie Hills Road
Mt Brown Road
Munro Road
St Leonards Road
Station Road

N.B. Please note that the figures on the following pages are numbered as they appear in the Hurunui District Plan and as such may appear to be out of sequence.

HURUNUI District Council	**Residential PIM / Building Consent Application Checklist (BAM 002-R)** (in conjunction with form BAM 002)	**PROJECT NO:**

Project address: 7 Swindon Lane, Amberley.

NB The following is required on application in sufficient detail to show compliance with all aspects of the District Plan and the New Zealand Building Code. Please complete this Checklist in FULL Additional information may be requested during processing of the application.	**Supplied**	**N/A**	**Council**
PIM			
Application form COMPLETED & signed	✓	■	
All information identified on the cover sheet	✓	■	
Application fee $ 675 GST Inclusive (Accepted Methods of Payment: CASH - EFTPOS – CHEQUE)	✓	■	
Certificate of Title: Recent search copy less than 6 months old, plus a sale & purchase agreement if not in the applicant's name. A subdivision scheme plan is required for a new site where Title is not yet available.	✓		
Copies of drawings as specified in the cover sheet	✓	■	
Site Plan – showing:			
– All new & existing buildings, swimming pools	✓		
– Any heritage buildings / trees or archaeological site information known		✓	
– Legal & notional boundaries (existing & proposed), easements, waterways, shared access ways / other areas with building setbacks dimensioned	✓		
– Building & site areas (including floor areas (m²) for all floors)	✓		
– Vehicle access, crossing location, manoeuvre, and parking area	✓		
– Street trees, poles, sumps, manholes, traffic islands outside the property	✓		
– Any hard-standing (sealed or concrete) areas with proposed drainage	✓		
– Landscaped areas required by District Plan indicated	✓		
– Any significant trees on the site		✓	
– Retaining walls		✓	
– Fire rated walls, eaves		✓	
– All activities on a site indicated	✓		
– Proposed & existing site & floor levels	✓		
– Existing & proposed contours, drive gradients and building heights (for hill or sloping sites)		✓	
– Intentions for the disposal of stormwater & sewer	✓		
– Storage location and capacity of Hazardous Substances (ie LPG, diesel, home heating oil etc)		✓	
Outline Floor plans (for all floors)	✓		
Outline Elevations	✓		
Outline Cross Sections – (if required to show recession plane / daylight plane & height compliance)	✓		

---------- ***STOP HERE IF THIS IS A PIM ONLY APPLICATION*** ----------

BUILDING CONSENT (in addition to the above)			
Project Information Memorandum (if already issued) plus all attached forms		✓	
Foundation Plans (timber or concrete slab) including all details	✓		
Drainage Plans - full design details including both Sewer & Stormwater and any disposal methods	✓		
Detailed Floor Plans - fully dimensioned and notated, including location of Smoke Alarms	✓		
Detailed Elevations - including door & windows showing opening sashes	✓		
Cross Sections - to show **all** relevant construction, especially through difficult areas of the building and changes in building form	✓		
Timber Treatment - the species, grading & treatment of **all** timber specific to the project is to be **specified on the drawings,** ideally on the cross section	✓		
Framing Details - including floor joist layout plans if applicable	✓		
Construction Details - with **all** materials, fixings etc noted	✓		
Weathertightness Details - including a risk assessment matrix for **all** walls & **all** flashings	✓		
Internal Waterproofing Details - including **all** wet areas & surface finishes	✓		
Plumbing Details - including layout plan / schematic & water supply details	✓		
Specifications - relevant to the project	✓		
Bracing Design - calculations, schedule and layout plans	✓		
Roof Truss Design - including layout plan, fixings and specific design for lintels where required	✓		
Ground Conditions report - this will be either a report to show why it is assumed that the ground is "good ground" using Section 3 of NZS 3604:1999, or a specific ground assessment & foundation design by a suitably qualified & experienced engineer		✓	
Engineers Details & Producer Statement - where any specific design has been carried out (e.g. steel beams)		✓	
Sediment Control Management Plan (if required by site location)		✓	

BUILDING CODE ASSESSMENT				
Building Code Clause		Means of Compliance (note that a project may include both Acceptable and Alternative solutions)		
		Acceptable Solution	Alternative Solution (details verifying compliance are required)	Waiver/ Modification required? (Provide separate details for justification of acceptance if yes)
B1	Structure		See Attached	
B2	Durability			
C1	Outbreak of fire			
C2	Means of escape			
C3	Spread of fire			
C4	Structural stability during fire			
D1	Access Routes			
D2	Mechanical installations for access			
E1	Surface water			
E2	External moisture			
E3	Internal moisture			
F1	Hazardous agents on site			
F2	Hazardous building materials			
F3	Hazardous substances and processes			
F4	Safety from falling			
F5	Construction and demolition hazards			
F6	Lighting for emergency			
F7	Warning systems			
F8	Signs			
G1	Personal hygiene			
G2	Laundering			
G3	Food prep. and prevention of contamination			
G4	Ventilation			
G5	Interior environment			
G6	Airborne and impact sound			
G7	Natural light			
G8	Artificial light			
G9	Electricity			
G10	Piped services			
G11	Gas as an energy source			
G12	Water supplies			
G13	Foul water			
G14	Industrial liquid waste			
G15	Solid waste			
H1	Energy efficiency provisions			

Additional Notes:

Building Compliance Matrix

Client	Jon Thomson and Hannah Baxter
Address	7 Swindon Pl
Job #	1019
Designer	Bud Caldwell

Clause		Means of Compliance	References	Waiver or Modification Required
B1	Structure			n/a
	Foundations	~~Alternative solution~~ AS1		n/a
	Frames	AS1		n/a
	Trusses	~~Specfic Design (Producer Statement)~~ AS1		n/a
B2	Durability	AS1		n/a
C1	Outbreak of Fire	n/a		n/a
C2	Means of Escape	AS1		n/a
C3	Spread of Fire	AS1		n/a
C4	Structual Stability During Fire	n/a		n/a
D1	Access	AS1		n/a
D2	Mechanical Installations for Access	n/a		n/a
E1	Surface Water	AS1		n/a
E2	External Moisture	AS1		n/a
E3	Internal Moisture	AS1		n/a
F1	Hazadous Agents on Site	n/a		n/a
F2	Hazadous Building Materails	n/a		n/a
F3	Hazadous Substances and Process	n/a		n/a
F4	Saftey From Falling	AS1		n/a
F5	Construction and Demolition Hazzards	n/a		n/a
F6	Lighting for Emergency	n/a		n/a
F7	Warning Systems	AS1		n/a
F8	Signs	n/a		n/a
G1	Personal Hygiene	AS1		n/a
G2	Laundering	AS1		n/a
G3	Food Prep & Prevention of Comtamination	AS1		n/a
G4	Ventilation	AS1		n/a
G5	Interior Enviroment	AS1		n/a
G6	Airborne and Impact Noise	AS1		n/a
G7	Natural Light	AS1		n/a
G8	Artifical Light	AS1		n/a
G9	Electricity	AS1		n/a
G10	Piped Services	AS1		n/a
G11	Gas as an Energy Service	AS1		n/a
G12	Water Supplies	AS1		n/a
G13	Foul Water	AS1		n/a
G14	Industrial Liquid Waste	n/a		n/a
G15	Solid Waste	n/a		n/a
H1	Energy Efficiency	AS1		n/a

Attn: Mike
Fax 03 313 0321

COMPUTER FREEHOLD REGISTER UNDER LAND TRANSFER ACT 1952

R.W. Muir
Registrar-General of Land

Search Copy

Identifier	**CB45C/43**
Land Registration District	**Canterbury**
Date Issued	17 December 1998

Prior References
CB40D/403

Estate	Fee Simple
Area	1260 square metres more or less
Legal Description	Lot 6 Deposited Plan 79189

Proprietors
Jonathan Sealy Neas Thomson and Hannah Jane Baxter

Interests

A382983.1 Resolution under Section 321(3)(c) Local Government Act 1974 (DP 79189) - 17.12.1998 at 12.20 pm

A382983.6 Easement Certificate specifying the following easements - 17.12.1998 at 12.20 pm

Type	Servient Tenement	Easement Area	Dominant Tenement	Statutory Restriction
Right of way, right to drain sewage and water, right to convey water, electric power and telephonic communications	Lot 5 Deposited Plan 79189 - CT CB45C/42	A DP 79189	Lot 6 Deposited Plan 79189 - herein	
Right of way, right to drain sewage and water, right to convey water, electric power and telephonic communications	Lot 5 Deposited Plan 79189 - CT CB45C/42	B DP 79189	Lot 6 Deposited Plan 79189 - herein	

The above easements will be subject to Section 243(a) Reousrce Management Act 1991 when created

A382983.7 Transfer creating the following easement in gross - 17.12.1998 at 12.20 pm

Type	Servient Tenement	Easement Area	Grantee	Statutory Restriction
Convey electric power	Lot 6 Deposited Plan 79189 - herein	E DP 79189	Mainpower New Zealand Limited	

The above easement is subject to Section 243(a) Resource Management Act 1991

Land Covenant in Transfer A419959.1 - 12.8.1999 at 11.32 am

7783330.2 Mortgage to ASB Bank Limited - 16.4.2008 at 3:31 pm

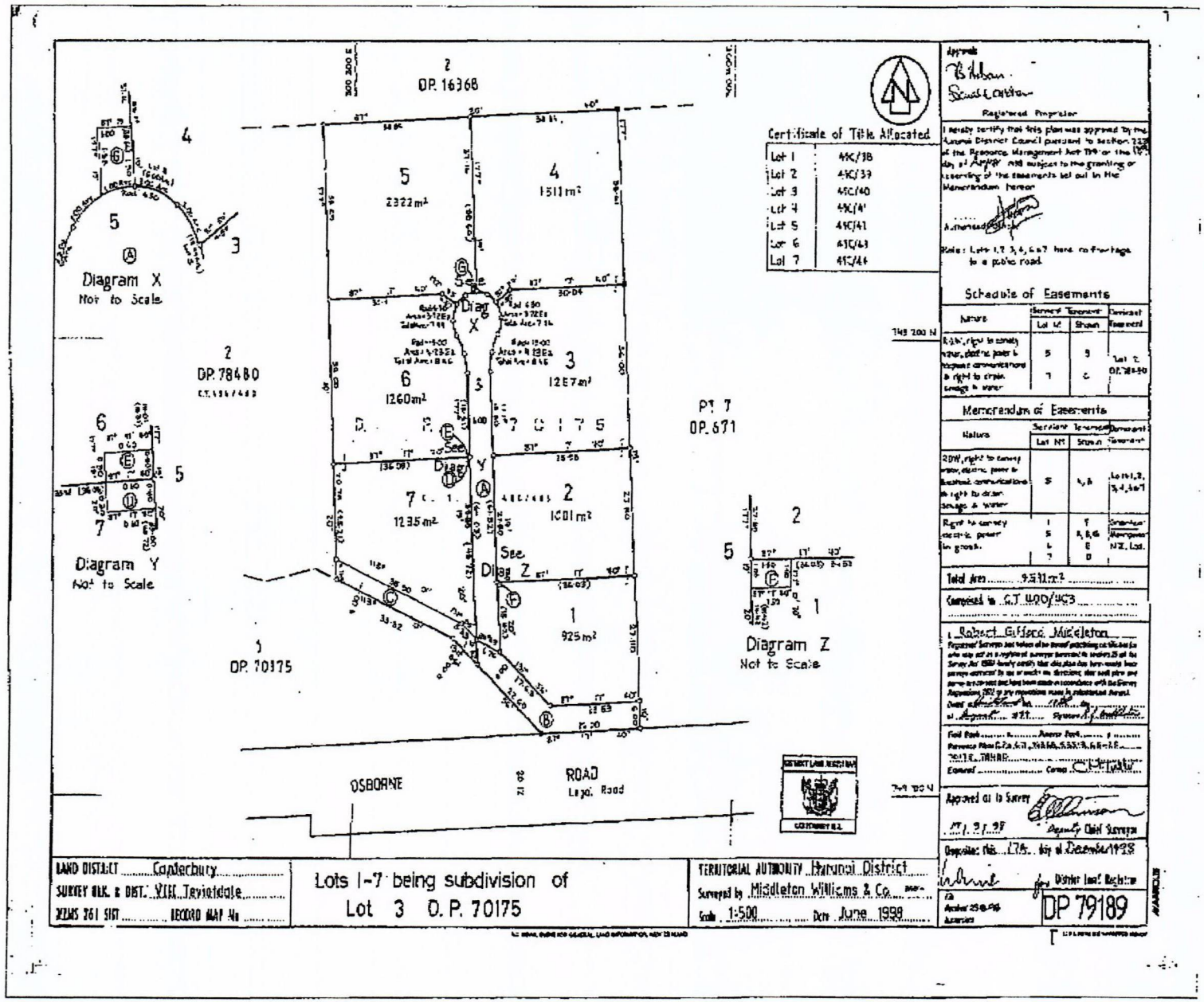

09 23 08 11:01a Hewat Galt +6432183343 p.2

Attn: Mike
Fax: 03 313 0321

COMPUTER FREEHOLD REGISTER UNDER LAND TRANSFER ACT 1952

Search Copy

R.W. Muir
Registrar-General of Land

Identifier	**CB45C/43**
Land Registration District	**Canterbury**
Date Issued	17 December 1998

Prior References
CB40D/403

Estate	Fee Simple
Area	1260 square metres more or less
Legal Description	Lot 6 Deposited Plan 79189

Proprietors
Jonathan Sealy Neas Thomson and Hannah Jane Baxter

Interests

A382983.1 Resolution under Section 321(3)(c) Local Government Act 1974 (DP 79189) - 17.12.1998 at 12.20 pm

A382983.6 Easement Certificate specifying the following easements - 17.12.1998 at 12.20 pm

Type	Servient Tenement	Easement Area	Dominant Tenement	Statutory Restriction
Right of way, right to drain sewage and water, right to convey water, electric power and telephonic communications	Lot 5 Deposited Plan 79189 - CT CB45C/42	A DP 79189	Lot 6 Deposited Plan 79189 - herein	
Right of way, right to drain sewage and water, right to convey water, electric power and telephonic communications	Lot 5 Deposited Plan 79189 - CT CB45C/42	B DP 79189	Lot 6 Deposited Plan 79189 - herein	

The above easements will be subject to Section 243(a) Reousrce Management Act 1991 when created

A382983.7 Transfer creating the following easement in gross - 17.12.1998 at 12.20 pm

Type	Servient Tenement	Easement Area	Grantee	Statutory Restriction
Convey electric power	Lot 6 Deposited Plan 79189 - herein	E DP 79189	Mainpower New Zealand Limited	

The above easement is subject to Section 243(a) Resource Management Act 1991

Land Covenant in Transfer A419959.1 - 12.8.1999 at 11.32 am

7783330.2 Mortgage to ASB Bank Limited - 16.4.2008 at 3:31 pm

Identifier **CB45C/43**

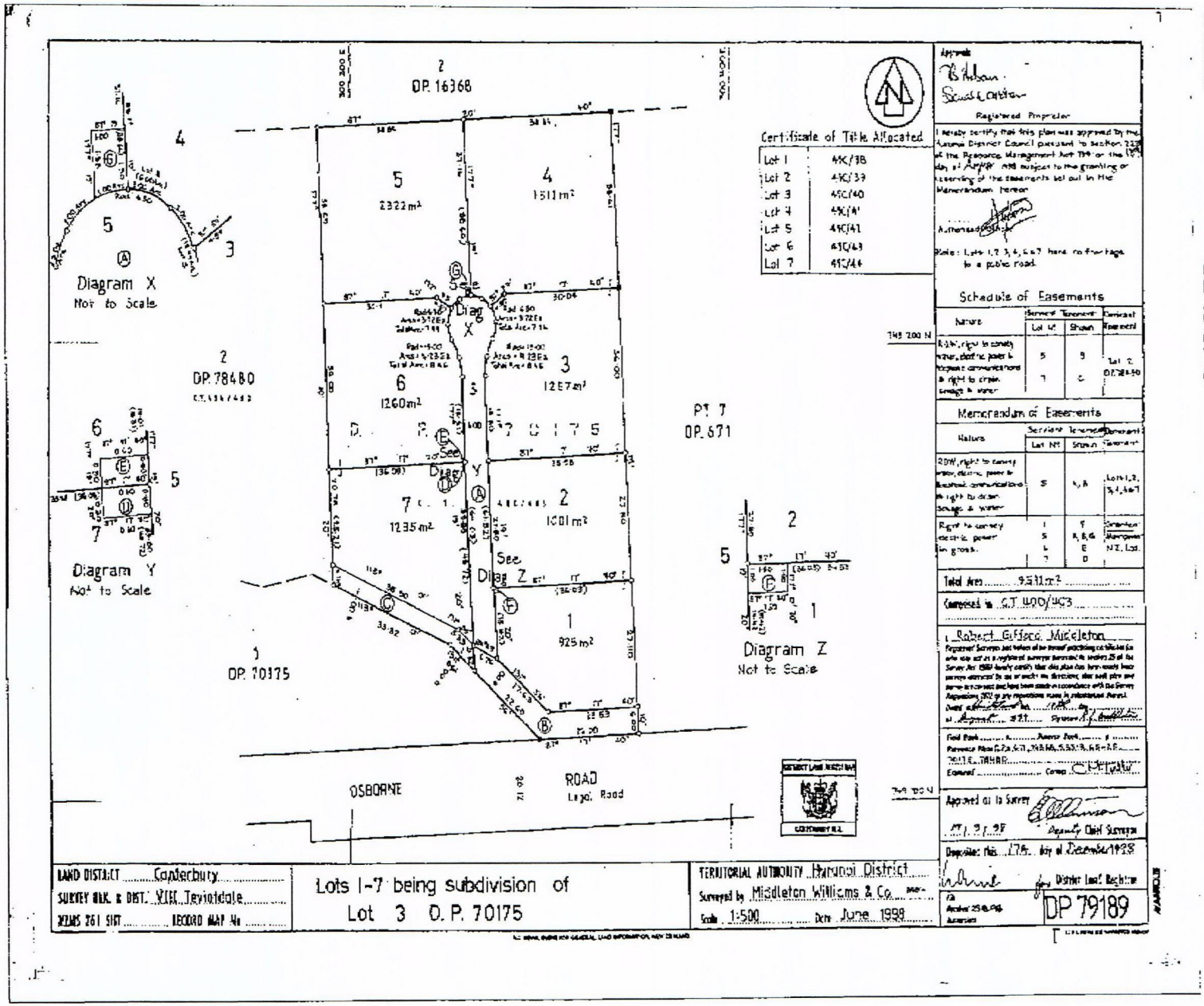

BUILDERS HARDWARE COMPANY
MANUFACTURING DIVISION

FRAMES*TRUSSES*LOOSE TIMBER

Attn: **Huranui District Council**
Building Control

Hurunui District Council
Building Consent Number
BC / 080237 _
Please quote this number with all inquiries and inspection bookings.

Date: 18 May 2008
Builder: **Muke Greer Homes**
Job Name: **Baxter and Thomson Res**
Site Address: **7 Swindon Lane**
Amberley

Building Consent No:
(To be provided by the Council)

We have been engaged to manufacture the trusses for the above project and have enclosed the truss layout and producer statement to allow completion of the building consent application On the advice of the building project owner the structure will be designed under the following parameters

This Truss Layout has been supplied on the expectation that the Local Authority will ensure that the trusses are manufactured by Builders Hardware Co Ltd whose truss layout has been used to issue the consent

Wind Zone: High

Snow Load: 0.6 kPa

Earthquake Zone: B

Roof Material: Lightweight

Treatment Definition: **External Walls; H1.2 Dry D Fir** **Roof Trusses; Untreated Dry D Fir H1.2 to Cove Rafters**

Internal Walls; U/T Dry D Fir

We can advise that the following will be provided at the time of truss manufacture to both the building owner and your office:

1. A full as built Truss Layout and Producer Statement

2: Specific Truss Fixings/Top Plate Fixings/Lintel Fixings Load Bearing Walls indicated on the truss Layout and floor plans as appropriate

3: All Lintel sizes for Lintels outside NZS3604; 1999 will be indicated on the truss layout

Acknowledgement of this letter along with the Building Consent Number by fax to our office would be appreciated

Yours faithfully

Graham Clayworth
Precut Manager

15 CALGARY PLACE HORNBY CHRISTCHURCH
Phone 344 4070 Fax 349 5325 Cell No (0275) 837 490

PRODUCER STATEMENT
MiTek 20/20™ TRUSS DESIGN PROGRAM

Certification of MiTek 20/20™ Truss Design Program

The MiTek 20/20™ truss design program has been developed by MiTek New Zealand Ltd for the design of GANG-NAIL timber roof, floor and attic trusses in New Zealand. The truss designs computed by this program are prepared using sound and widely accepted engineering principles, and in accordance with NZS 4203, NZS 3603 and NZS 3604 as verification methods and acceptable solutions of the approved documents of the New Zealand Building Code to satisfy the requirements of the Building Regulations 1992: Clause B1 - Structure. This computer design for the proposed building complies with the relevant provisions of the NZ Building Code. This is subject to all proprietary products meeting their performance specification requirements, the provision of adequate bracing, fixings and the correct input of design data carried out by suitably trained personnel.

Summary of MiTek 20/20™ Truss Design Data and Output

The MiTek 20/20™ computer design output for this job titled and located at the site identified on the top of this page is based on the following parameters entered into the program. The owner must ensure that the following job details below are current and relevant to the project before fabrication and erection of the GANG-NAIL trusses.

Job Details

Roof Truss

Timber Group:	MSG8_UT	Pitch:	28.000 deg	Std Overhang:	600 mm
Roof		**Ceiling**		**Wind**	
Material:	Light	Material:	Standard	Area:	High (44.0 m/s)
Dead Load:	0.250 kPa	Dead Load:	0.200 kPa	Pressure Coeff:	Cpe = varies; Cpi = -0.30, 0.20
Restraints:	900 mm centres	Restraints:	600 mm centres	**Snow**	
[redacted]e Load:	Qur = 0.250 kPa			Location:	Christchurch at 120 m
	Qc = 1.000 kN			Open Ground Load:	0.600 kPa
				Basic Roof Load:	0.600 kPa

These trusses must be fabricated and erected in accordance with the GANG-NAIL manual. Proper erection bracing must be installed to hold the components true and plumb and in a safe condition until permanent bracing is fixed. All permanent bracing and fixing must be installed before any loads are applied. The specifications for timber shall be as shown on the output. The timber shall be standard gauged and treated to the requirements of NZS 3640:2003. Unless otherwise noted, this design assumes that the steel fixings and timber connectors are situated in a closed environment, as defined by NZS3604:1999 Section 4.

Truss List

Legend: * = detail only, ? = input only, ~~Txx~~ = failed design, Unmarked trusses = designed successfully, LB = lateral bracing required

Truss	Qty	Span (mm)	Pitch (deg)	Spacing (mm)	Truss	Qty	Span (mm)	Pitch (deg)	Spacing (mm)	Truss	Qty	Span (mm)	Pitch (deg)	Spacing (mm)
J08	1	3567	28.000	900	J04A	2	1567	28.000	900	T07	2	3080	28.000	900
J08B	1	3567	28.000	900	J04B	2	1567	28.000	900	T08	1	2467	28.000	900
T01	1	4600	28.000	900	J04C	1	1567	28.000	900	T09	1	2667	28.000	900
T01A	1	4600	28.000	900	J05	1	1517	28.000	900	T09A	1	2667	28.000	900
T02	1	3890	28.000	900	J05A	1	1517	28.000	900	*HB01	2	4024	20.605	900
T02A	1	3890	28.000	900	J05B	1	1517	28.000	900	*HB02	3	4293	20.605	900
T04	1	5970	28.000	900	J06	1	2962	28.000	900	*HB03	2	2950	20.605	900
T04A	1	5970	28.000	900	J06A	1	2962	28.000	900	*HB04	2	4993	20.605	900
T05	4	10780	28.000	900 LB	J06B	1	2962	28.000	900	*HB05	1	983	20.605	900
T05A	1	10780	28.000	900 LB	J07	1	2062	28.000	900	*HB06	1	3437	20.605	900
TG01	1	10780	28.000	900	J07A	1	2062	28.000	900	*HB07	1	5000	20.605	900
TG02	1	10780	28.000	900	J07B	1	2062	28.000	900	*HB08	1	5549	20.605	900
TR[redacted]	1	10780	28.000	900	J07C	1	2062	28.000	900	*HB09	1	5047	20.605	900
TR[redacted]	1	10780	28.000	900	J08A	1	3567	28.000	900	*R01	1	1090	28.000	900
TR02	1	10780	28.000	900	J09	1	2667	28.000	900	*R01A	1	1090	28.000	900
J01	1	2277	28.000	900	J09A	1	2667	28.000	900	*R02	9	913	28.000	900
J01A	1	2277	28.000	900	J09B	1	2667	28.000	900	*R02A	9	913	28.000	900
J01B	1	2277	28.000	900	J09C	1	2667	28.000	900	*R03	1	1280	28.000	900
J02	1	1377	28.000	900	J09D	1	2667	28.000	900	*R03A	2	1280	28.000	900
J02A	1	1377	28.000	900	J09E	1	2667	28.000	900	*R04	1	1230	28.000	900
J02B	1	1377	28.000	900	J09F	1	2667	28.000	900	*R04A	1	1230	28.000	900
J02C	1	1377	28.000	900	J09G	1	2667	28.000	900	*R05	1	1775	28.000	900
J03	1	2467	28.000	900	J09H	1	2667	28.000	900	*R05A	1	1775	28.000	900
J03A	1	2467	28.000	900	J10	1	1255	28.000	900	*R06	1	5131	28.000	900
J03B	1	2467	28.000	900	T03	1	3080	28.000	900	*R07	1	1543	28.000	900
J03C	2	2467	28.000	900	T06	1	2667	28.000	900	*R08	1	3343	28.000	900
J04	1	1567	28.000	900	T06A	1	2667	28.000	900					

Total quantity : 109

HURUNUI DISTRICT COUNCIL
Plans and specifications APPROVED.
In accordance with the Building Act 2004, clause 49(1) and the associated Building Regulations.

Signed .....

Builders Hardware Company Ltd

Job: CTL738 Client: MIKE GREER HOMES Site: Baxter and Thomson House
Phone: 7 Swindon Lane
Amberley

Description: Baxter & Thomson Rses7 Swindon Phone:
Building Consent No.:

The computer design input has been carried out by:

Signed: ..... Date: 21/05/08

Name of Computer Operator: .....

Qualifications and Title: .....

Company: **Builders Hardware Company Ltd**

Verification / Acceptance of Input Data:

I have checked the input data against the construction drawings and specifications and verify that they are correct and suitable for this job.

Signed: ..... Date: .....

Name: ..... Company: .....

Job: CTL738

Client: MIKE GREER HOMES
Phone:

Site: Baxter and Thomson House
7 Swindon Lane
Amberley

Description: Baxter & Thomson Rses7 Swindon
Building Consent No.:

Phone:

TRUSS FIXING SELECTION REPORT - Characteristic Loads

Fixings are selected from the LUMBERLOK Brochure 03/4 (Timber Connectors Characteristic Loadings Data)

Truss List

Legend: * = detail only, ? = input only, ~~Txx~~ = failed design, Unmarked trusses = designed successfully

Truss	Qty	Span (mm)	Joint	Down (kN)	Uplift (kN)	Bearing	Fixing Qty	Fixing Selected
J08	1	3567	F	0.355	0.361	Butt	1	Pair of 3.15d Nails
			E	1.486	1.291	Cross	1	Pair of Wire Dog Staples
			G	8.418	3.586	Cross	1	CT400
J08B	1	3567	F	1.548	2.104	Butt	1	JH 47x90
			D	0.960	0.804	Butt	1	Pair of 3.15d Nails
			E	8.562	4.295	Cross	1	CT400
T01	1	4600	B	6.694	4.008	Cross	1	CT400
			F	6.694	4.008	Cross	1	CT400
T01A	1	4600	B	8.052	4.321	Cross	1	CT400
			F	14.566	7.443	Cross	1	CT400
T02	1	3890	B	5.958	3.761	Cross	1	CT400
			J	7.596	3.854	Cross	1	CT400
			G	0.652	0.551	Cross	1	Pair of Wire Dog Staples
T02A	1	3890	B	6.003	3.683	Cross	1	CT400
			J	6.418	3.319	Cross	1	CT400
T04	1	5970	B	9.871	6.062	Cross	1	CT400
			F	8.931	5.240	Cross	1	CT400
T04A	1	5970	B	6.395	3.652	Cross	1	CT400
			F	5.411	2.779	Cross	1	Pair of Wire Dog Staples
T05	4	10780	L	9.462	5.473	Cross	4	CT400
			J	8.425	4.667	Cross	4	CT400
			N	3.609	1.763	Cross	4	Pair of Wire Dog Staples
T05A	1	10780	L	8.052	4.874	Cross	1	CT400
			J	7.125	4.066	Cross	1	CT400
			N	3.866	1.871	Cross	1	Pair of Wire Dog Staples
			Q	2.453	1.338	Cross	1	Pair of Wire Dog Staples
TG01	1	10780	B	5.240	2.888	Cross	1	Pair of Wire Dog Staples
			I	4.457	2.886	Butt	1	JH 47x90
			T	12.566	9.992	Cross	1	CT200 pair
TG02	1	10780	B	4.965	3.127	Cross	1	Pair of Wire Dog Staples
			I	8.620	5.460	Cross	1	CT400
			U	20.883	13.787	Cross	1	16kN Truss to Top Plate
TR01	1	10780	B	4.192	2.497	Cross	1	Pair of Wire Dog Staples
			K	6.825	3.856	Cross	1	CT400
			P	10.473	5.408	Cross	1	CT400
TR01A	1	10780	B	7.390	4.145	Cross	1	CT400
			J	5.701	2.929	Butt	1	JH 47x90
			P	7.506	3.918	Cross	1	CT400
TR02	1	10780	B	4.940	2.912	Cross	1	Pair of Wire Dog Staples
			G	7.273	4.104	Cross	1	CT400
			N	9.279	4.745	Cross	1	CT400
I01	1	2277	B	3.360	2.047	Cross	1	Pair of Wire Dog Staples
			F	1.487	0.853	Butt	1	JH 47x90
I01A	1	2277	B	3.360	2.047	Cross	1	Pair of Wire Dog Staples
			F	1.487	0.853	Butt	1	JH 47x90
I01B	1	2277	B	3.093	1.606	Cross	1	Pair of Wire Dog Staples
			E	1.325	0.779	Butt	1	JH 47x90
			D	0.638	0.543	Butt	1	Pair of 3.15d Nails
02	1	1377	B	2.312	1.550	Cross	1	Pair of Wire Dog Staples
			D	0.646	0.102	Butt	1	Pair of 3.15d Nails
02A	1	1377	B	2.312	1.550	Cross	1	Pair of Wire Dog Staples
			D	0.646	0.102	Butt	1	Pair of 3.15d Nails
02B	1	1377	B	2.324	1.414	Cross	1	Pair of Wire Dog Staples
			D	0.402	0.040	Butt	1	Pair of 3.15d Nails
			C	0.803	0.591	Butt	1	Pair of 3.15d Nails
02C	1	1377	B	2.324	1.414	Cross	1	Pair of Wire Dog Staples
			D	0.402	0.040	Butt	1	Pair of 3.15d Nails
			C	0.803	0.591	Butt	1	Pair of 3.15d Nails
03	1	2467	B	3.738	2.205	Cross	1	Pair of Wire Dog Staples
			F	1.897	1.130	Butt	1	JH 47x90
03A	1	2467	B	3.738	2.205	Cross	1	Pair of Wire Dog Staples
			F	1.897	1.130	Butt	1	JH 47x90
03B	1	2467	B	3.738	2.205	Cross	1	Pair of Wire Dog Staples
			F	1.897	1.130	Butt	1	JH 47x90
03C	2	2467	B	3.258	1.654	Cross	2	Pair of Wire Dog Staples
			E	1.469	0.880	Butt	2	JH 47x90
			D	0.677	0.574	Butt	2	Pair of 3.15d Nails
04	1	1567	B	2.492	1.595	Cross	1	Pair of Wire Dog Staples
			E	0.758	0.260	Butt	1	Pair of 3.15d Nails
04A	2	1567	B	2.492	1.595	Cross	2	Pair of Wire Dog Staples
			E	0.758	0.260	Butt	2	Pair of 3.15d Nails

Builders Hardware Company Ltd

Job: CTL738 Client: MIKE GREER HOMES Phone: Site: Baxter and Thomson House 7 Swindon Lane Amberley

Description: Baxter & Thomson Rses7 Swindon Phone:

Building Consent No.:

MiTek 20/20 - Engineering 4.4 Gamma1.5 (build 1597-53) MiTek New Zealand Ltd Printed: 16:56:09 21 May 2008

Truss	Qty	Span (mm)	Joint	Down (kN)	Uplift (kN)	Bearing	Fixing Qty	Fixing Selected
J04B	2	1567	B	2.497	1.449	Cross	2	Pair of Wire Dog Staples
			D	0.466	0.046	Butt	2	Pair of 3.15d Nails
			C	0.996	0.759	Butt	2	Pair of 3.15d Nails
J04C	1	1567	B	2.497	1.449	Cross	1	Pair of Wire Dog Staples
			D	0.466	0.046	Butt	1	Pair of 3.15d Nails
			C	0.996	0.759	Butt	1	Pair of 3.15d Nails
J05	1	1517	B	2.452	1.586	Cross	1	Pair of Wire Dog Staples
			E	0.731	0.222	Butt	1	Pair of 3.15d Nails
J05A	1	1517	B	2.452	1.586	Cross	1	Pair of Wire Dog Staples
			E	0.731	0.222	Butt	1	Pair of 3.15d Nails
J05B	1	1517	B	2.457	1.441	Cross	1	Pair of Wire Dog Staples
			D	0.451	0.045	Butt	1	Pair of 3.15d Nails
			C	0.954	0.722	Butt	1	Pair of 3.15d Nails
J06	1	2962	B	4.535	2.619	Cross	1	Pair of Wire Dog Staples
			G	2.990	1.911	Butt	1	JH 47x90
J06A	1	2962	B	4.649	2.752	Cross	1	Pair of Wire Dog Staples
			G	3.136	2.079	Butt	1	JH 47x90
J06B	1	2962	B	3.692	1.786	Cross	1	Pair of Wire Dog Staples
			F	1.809	1.116	Butt	1	JH 47x90
			D	0.808	0.676	Butt	1	Pair of 3.15d Nails
J07	1	2062	B	2.905	1.701	Cross	1	Pair of Wire Dog Staples
			E	1.088	0.624	Butt	1	Pair of 3.15d Nails
J07A	1	2062	A	1.880	0.781	Cross	1	Pair of Wire Dog Staples
			D	1.218	0.774	Butt	1	Pair of 3.15d Nails
J07B	1	2062	A	1.884	0.635	Cross	1	Pair of Wire Dog Staples
			D	1.431	0.813	Butt	1	JH 47x90
			C	0.621	0.507	Butt	1	Pair of 3.15d Nails
J07[redacted]	1	2062	B	2.909	1.554	Cross	1	Pair of Wire Dog Staples
			D	0.613	0.061	Butt	1	Pair of 3.15d Nails
			C	1.406	1.109	Butt	1	JH 47x90
J08A	1	3567	B	5.146	2.724	Cross	1	Pair of Wire Dog Staples
			H	5.339	3.118	Butt	1	JH 47x90
J09	1	2667	B	3.308	0.716	Cross	1	Pair of Wire Dog Staples
			H	0.500	0.410	Butt	1	Pair of 3.15d Nails
			E	3.149	2.262	Cross	1	Pair of Wire Dog Staples
			F	1.349	1.108	Cross	1	Pair of Wire Dog Staples
			G	1.463	1.199	Cross	1	Pair of Wire Dog Staples
J09A	1	2667	B	2.995	1.028	Cross	1	Pair of Wire Dog Staples
			E	0.453	0.375	Butt	1	Pair of 3.15d Nails
			D	3.299	2.396	Cross	1	Pair of Wire Dog Staples
J09B	1	2667	B	3.310	1.027	Cross	1	Pair of Wire Dog Staples
			G	0.469	0.385	Butt	1	Pair of 3.15d Nails
			E	3.127	2.246	Cross	1	Pair of Wire Dog Staples
			F	1.474	1.209	Cross	1	Pair of Wire Dog Staples
J09C	1	2667	B	3.213	1.225	Cross	1	Pair of Wire Dog Staples
			E	0.445	0.366	Butt	1	Pair of 3.15d Nails
			D	3.277	2.370	Cross	1	Pair of Wire Dog Staples
J09D	1	2667	A	5.882	2.616	Cross	1	Pair of Wire Dog Staples
			E	4.559	2.958	Butt	1	JH 47x90
J09E	1	2667	B	3.310	1.027	Cross	1	Pair of Wire Dog Staples
			G	0.469	0.385	Butt	1	Pair of 3.15d Nails
			E	3.127	2.246	Cross	1	Pair of Wire Dog Staples
			F	1.474	1.209	Cross	1	Pair of Wire Dog Staples
J0[redacted]	1	2667	B	3.429	1.853	Cross	1	Pair of Wire Dog Staples
			F	1.669	1.044	Butt	1	JH 47x90
J09G	1	2667	B	3.429	1.853	Cross	1	Pair of Wire Dog Staples
			F	1.669	1.044	Butt	1	JH 47x90
J09H	1	2667	A	5.550	2.143	Butt	1	JH 47x90
			E	5.190	2.922	Butt	1	JH 47x90
J10	1	1255	G	1.547	1.123	Butt	1	JH 47x90
			C	3.099	1.493	Butt	1	JH 47x90
			B	0.563	0.525	Cross	1	Pair of Wire Dog Staples
T03	1	3080	B	3.985	2.401	Cross	1	Pair of Wire Dog Staples
			D	3.985	2.401	Cross	1	Pair of Wire Dog Staples
T06	1	2667	B	3.227	2.201	Cross	1	Pair of Wire Dog Staples
			H	4.224	1.853	Butt	1	JH 47x90
			F	1.096	0.902	Cross	1	Pair of Wire Dog Staples
T06A	1	2667	B	3.381	2.104	Cross	1	Pair of Wire Dog Staples
			H	3.236	1.567	Butt	1	JH 47x90
			F	0.555	0.464	Cross	1	Pair of Wire Dog Staples
T07	2	3080	B	3.796	2.330	Cross	2	Pair of Wire Dog Staples
			D	2.728	1.360	Cross	2	Pair of Wire Dog Staples
T08	1	2467	B	3.258	1.995	Cross	1	Pair of Wire Dog Staples
			F	2.146	1.113	Butt	1	JH 47x90
T09	1	2667	F	3.206	1.605	Butt	1	JH 47x90
			E	2.386	1.262	Cross	1	Pair of Wire Dog Staples
			B	0.624	0.343	Cross	1	Pair of Wire Dog Staples

Builders Hardware Company Ltd

Job: CTL738 Client: MIKE GREER HOMES Site: Baxter and Thomson House
Phone: 7 Swindon Lane
Amberley

Description: Baxter & Thomson Rses7 Swindon Phone:
Building Consent No.:

MiTek 20/20 - Engineering 4.4 Gamma1.5 (build 1597-53) MiTek New Zealand Ltd. Printed: 18:56:09 21 May 2008

Truss	Qty	Span (mm)	Joint	Down (kN)	Uplift (kN)	Bearing	Fixing Qty	Fixing Selected
T09A	1	2667	D	2.437	1.307	Butt	1	JH 47x90
			C	2.437	1.222	Cross	1	Pair of Wire Dog Staples
*HB01	2	4024						
*HB02	3	4293						
*HB03	2	2950						
*HB04	2	4993						
*HB05	1	983						
*HB06	1	3437						
*HB07	1	5000						
*HB08	1	5549						
*HB09	1	5047						
*R01	1	1090						
*R01A	1	1090						
*R02	9	913						
*R02A	9	913						
*R03	1	1280						
*R03A	2	1280						
*R04	1	1230						
*R04A	1	1230						
*R05	1	1775						
*R05A	1	1775						
*R06	1	5131						
*R07	1	1543						
*R08	1	3343						

Fixing List

Qty	Selected Fixing	Cost
34	Pair of 3.15d Nails	3.40
74	Pair of Wire Dog Staples	20.72
30	CT400	21.30
29	JH 47x90	24.94
1	CT200 pair	0.72
1	16kN Truss to Top Plate	0.00
Total		71.08

Note:

1) Fixings have been selected based on loading only. Please check that selected fixings are practical for each situation and that appropriate nailing can be applied on site.

2) Fixings are selected from the LUMBERLOK Brochure 03/4 (Timber Connectors Characteristic Loadings Data) with down and uplift characteristic loads of at least the values shown for each joint.

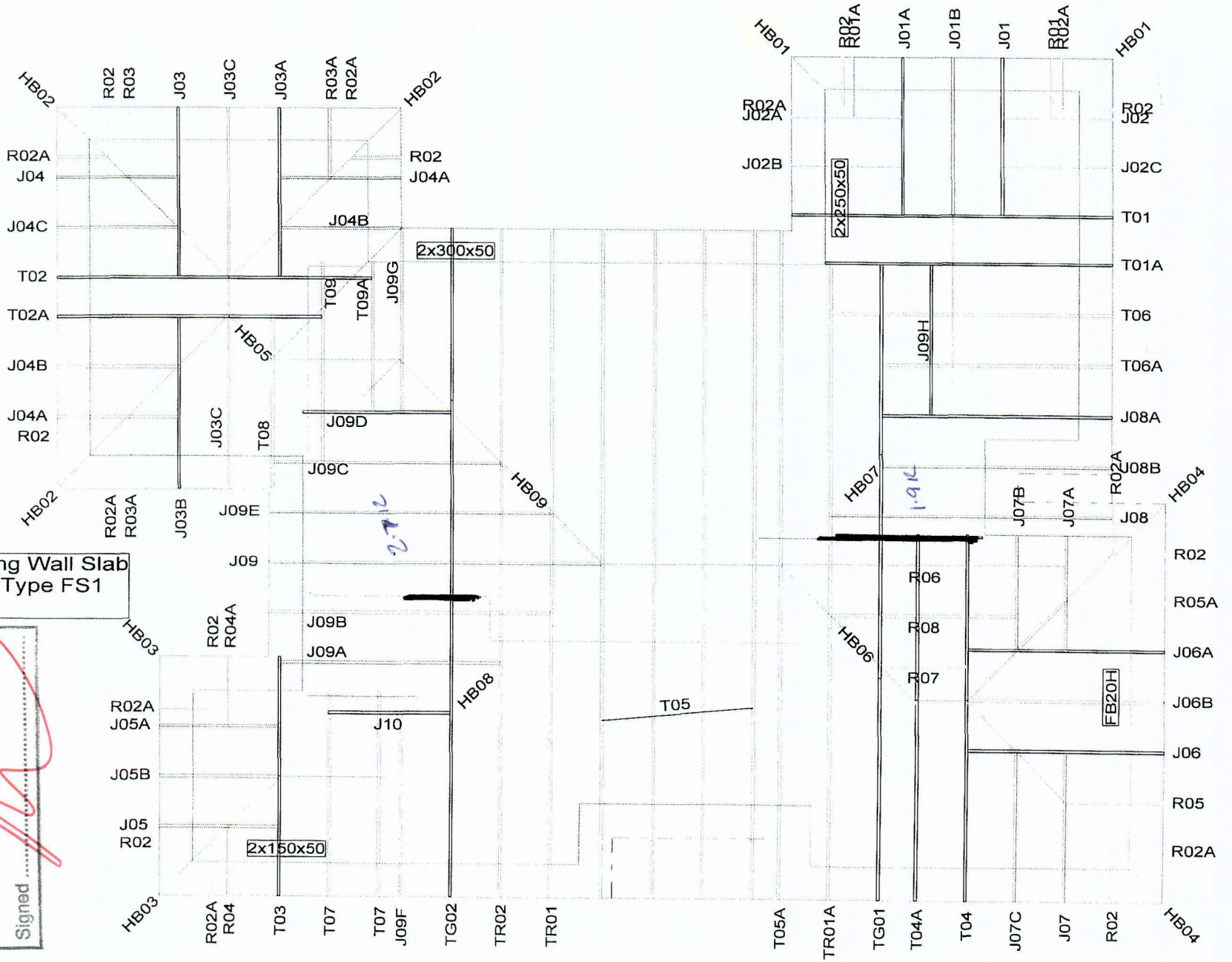

Load Bearing Wall Slab
Thickening Type FS1

HURUNUI DISTRICT COUNCIL
Plans and specifications APPROVED.
In accordance with the Building Act 2004, clause 49(1) and the associated Building Regulations.
Signed .....

Job Details:

Snow Zone:	Christchurch	Snow Altitude:	120 m
Wind Area:	High	Design Wind Speed:	44.0 m/s
TC Restraints:	900 mm	BC Restraints:	600 mm
Roof Material:	Light	Ceiling Material:	Standard
Roof Live Load:	0.250 kPa	Snow Load:	0.600 kPa
Roof Pitch:	28.000 deg	Truss Centres:	900 mm

Builders Hardware Company Ltd

15 Calgary Place
Hornby
Christchurch
New Zealand
Telephone: 03 3444070

Name: MIKE GREER HOMES
Address: 7 Swindon Lane
Ashley

C Baxter Thomson Rses7 Swindon

Job: CTL738
file location: C:\HITEK38\JOBS\CTL738\

Scale: 1 : 100 | Date: 21/05/2008 | Drawn By Nelson W

Calculation method from NZS 4218 Reference building versus Proposed

Thomson & Baxter Ho	21 May 2008							
		Reference	Proposed		R Values (Reference NZBC H1/AS1 Table 1) m²K/W	HL (Reference)	R Values (Proposed) m²K/W *see R value calculation sheets*	HL (Proposed)
Total Area of external wall envelope		181.00 m²	181.00 m²					
Area of Windows/Glazed doors		54.3	49.07 m²		0.26	208.85	0.26	188.73
Area of Insulated External wall		126.700	131.93 m²		2	63.35	2.39	55.20
Area of Insulated External wall			0.00 m²					0.00
Area of Insulated External wall			0.00 m²					0.00
Area of Insulated External wall			0.00 m²					0.00
						63.35		55.20
		Reference	Proposed					
Total area of Roof		164.90 m²			3.3	49.97		
Area of roof type 1			164.90 m²				3.58	46.06
Area of roof type 2			0.00 m²					0.00
Area of roof type 3			0.00 m²					0.00
			Totals			**385.52**		**345.19**
Note: Assumed heat loss for reference and proposed floors assumed to be identical								
Conclusion:								
Calculated heat loss of proposed construction is below that of reference building. Complies with NZBC H1/AS1								

Smart Plans Limited
Thomson & Baxter House Amberley

Smart Plans

Documentation of the component
Thermal transmittance (U-value) according to BS EN ISO 6946
Source: **own catalogue - Pitched roofs**
Component: **Colorsteel roof**

OUTSIDE

This illustration of inhomogeneous layers is provided only to assist in visualising the arrangement.

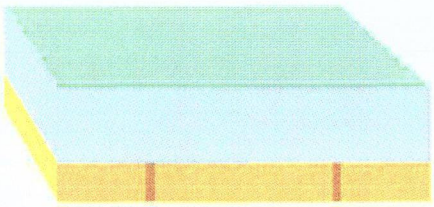

INSIDE

Assignment: Pitched roof < 70°, with insulation b etween rafters

		Manufacturer	Name	Thickness [m], number	Lambda [W/(mK)]	Q	R [m²K/W]
		Rse					0.04
☑	1		Colorsteel	0.002	50.000	E	0.00
☑	2	BS EN ISO 6946	Slightly vent. air layer: 300 mm, upw. heat flow	0.300	3.750	D	0.08
☑	3	Inhomogeneous material layer	consisting of:	0.155			
	3a	Pink Batts	R3.6	95.00 %	0.043	E	-
	3b	BS EN 12524	Timber [500 kg/m³]	05.00 %	0.130	D	-
☑	4	Winstone Wallboard	GIB Standard Plasterboard	0.010	0.250	E	0.04
		Rsi					0.10
				0.467			

$R_T = (R_T' + R_T'')/2 = 3.55$ m²K/W

$U = 1/R_T = 0.28$ W/(m²K)

Q .. The physical values of the building materials has been graded by their level of quality. These 5 levels are the following
A .. A: Data is entered and validated by the manufacturer or supplier. Data is continuously tested by 3rd party.
B .. B: Data is entered and validated by the manufacturer or supplier. Data is certified by 3rd party
C .. C: Data is entered and validated by the manufacturer or supplier.
D .. D: Information is entered by BuildDesk without special agreement with the manufacturer, supplier or others.
E .. E: Information is entered by the user of the BuildDesk software without special agreement with the manufacturer, supplier or others.

U_{max} = 0.25 W/(m²K) U = 0.28 W/(m²K) R_T= 3.55 m²K/W

Source of Umax value: England, Wales: Approved Document L1A (2006), Table 2 - New Build Dwellings

Smart Plans Limited
Thomson & Baxter House Amberley

Smart Plans

Documentation of the component
Thermal transmittance (U-value) according to BS EN ISO 6946
Source: **own catalogue - Pitched roofs**
Component: **Colorsteel roof**

Draft of the component (portion in %):

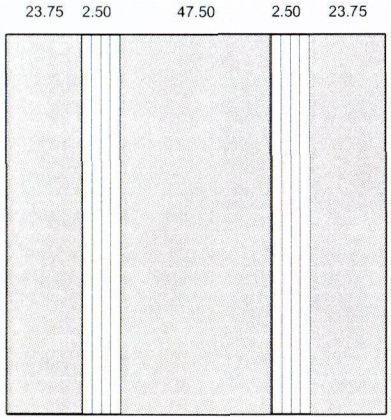

The inhomogeneous layer consists of two zones (A, B).
The portion is given in %.

A	23.75 + 47.50 + 23.75 consisting of material layers: 1, 2, 3a, 4	= 95.00%
B	2.50 + 2.50 consisting of material layers: 1, 2, 3b, 4	= 5.00%

Upper limit of the thermal transfer resistance R

$$U_A\ [W/(m^2K)] = \frac{1}{(\Sigma R_{i,A}) + R_{si} + R_{se}} = \frac{1}{3.72 + 0.1 + 0.04} = 0.26$$

$$U_B\ [W/(m^2K)] = \frac{1}{(\Sigma R_{i,B}) + R_{si} + R_{se}} = \frac{1}{1.31 + 0.1 + 0.04} = 0.69$$

$$R_T' = \frac{1}{A * U_A + B * U_B} = 3.57\ m^2K/W$$

Lower limit of the thermal transfer resistance R

$R_{se}\ [m^2K/W]$		= 0.04
$R_1''\ [m^2K/W] = d_1/\lambda_1 =$	0.002 / 50.000	= 0.00
$R_2''\ [m^2K/W] = d_2/\lambda_2 =$	0.300 / 3.750	= 0.08
$R_3''\ [m^2K/W] = d_3/(\lambda_{3a} * A + \lambda_{3b} * B) =$	0.155 /(0.043 * 95.00% + 0.130 * 5.00%)	= 3.27
$R_4''\ [m^2K/W] = d_4/\lambda_4 =$	0.010 / 0.250	= 0.04
$R_{si}\ [m^2K/W]$		= 0.1

$$R_T'' = \Sigma R_i'' + R_{si} + R_{se} = 3.53\ m^2K/W$$

HURUNUI DISTRICT COUNCIL
Plans and specifications APPROVED.
In accordance with the Building Act
2004, clause 49(1) and the associated
Building Regulations.
Signed .....

Smart Plans Limited
Thomson & Baxter House Amberley

Smart Plans

Documentation of the component
Thermal transmittance (U-value) according to BS EN ISO 6946
Source: **own catalogue - External walls**
Component: **70 Series Brick Veneer**

OUTSIDE INSIDE



This illustration of inhomogeneous layers is provided only to assist in visualising the arrangement.

Assignment: External wall

		Manufacturer	Name	Thickness [m], number	Lambda [W/(mK)]	Q	R [m²K/W]
		Rse					0.04
☑	1	Generic Building Materials	Brick outer leaf & Mortar outer leaf (f = 0.000 / automatic disregarding acc. BRE 4.4.3)	0.070	0.770	D	0.09
☑	2	BS EN ISO 6946	Slightly vent. air layer: 50 mm, horiz. heat flow	0.050	0.556	D	0.09
☑	3	TYVEK	Tyvek Framewrap	0.001	0.100	C	0.01
☑	4	Inhomogeneous material layer	consisting of:	0.090			
	4a	Pink Batts Air gaps	Ultra R2.6 Wall Level 1: dU" = 0.01 W/(m²K)	87.50 %	0.035	E	-
	4b	BS EN 12524	Timber [500 kg/m³]	12.50 %	0.130	D	-
☑	5	Winstone Wallboard	GIB Standard Plasterboard	0.010	0.250	E	0.04
		Rsi					0.13
				0.221			

$R_T = (R_T' + R_T'')/2 = 2.39$ m²K/W

Correction to U-value for	according to	delta U [W/(m²K)]
Air gaps	BS EN ISO 6946 Annex D	~~0.007~~
Air gaps and fixings corrections need not be applied, as their total effect is less than 3% (Annex D BS 6946:1996).		0.000

$U = 1/R_T + \Sigma\Delta U = 0.42$ W/(m²K)

Q .. The physical values of the building materials has been graded by their level of quality. These 5 levels are the following
A .. A: Data is entered and validated by the manufacturer or supplier. Data is continuously tested by 3rd party.
B .. B: Data is entered and validated by the manufacturer or supplier. Data is certified by 3rd party
C .. C: Data is entered and validated by the manufacturer or supplier.
D .. D: Information is entered by BuildDesk without special agreement with the manufacturer, supplier or others.
E .. E: Information is entered by the user of the BuildDesk software without special agreement with the manufacturer, supplier or others.

U_{max} = 0.35 W/(m²K) U = 0.42 W/(m²K) R_T = 2.39 m²K/W

Source of Umax value: England, Wales: Approved Document L1A (2006), Table 2 - New Build Dwellings

Smart Plans

Documentation of the component
Thermal transmittance (U-value) according to BS EN ISO 6946
Source: **own catalogue - External walls**
Component: **70 Series Brick Veneer**

Draft of the component (portion in %):

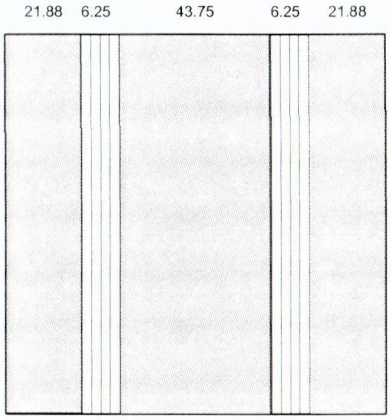

The inhomogeneous layer consists of two zones (A, B).
The portion is given in %.

A	21.88 + 43.75 + 21.88 consisting of material layers: 1, 2, 3, 4a, 5	= 87.50%
B	6.25 + 6.25 consisting of material layers: 1, 2, 3, 4b, 5	= 12.50%

Upper limit of the thermal transfer resistance R

$$U_A\ [W/(m^2K)] = \frac{1}{(\Sigma R_{i,A}) + R_{si} + R_{se}} = \frac{1}{2.83 + 0.13 + 0.04} = 0.33$$

$$U_B\ [W/(m^2K)] = \frac{1}{(\Sigma R_{i,B}) + R_{si} + R_{se}} = \frac{1}{0.92 + 0.13 + 0.04} = 0.92$$

$$R_T' = \frac{1}{A * U_A + B * U_B} = 2.46\ m^2K/W$$

Lower limit of the thermal transfer resistance R

R_{se} [m²K/W]		= 0.04
R_1 " [m²K/W] = d_1/λ_1 =	0.070 / 0.770	= 0.09
R_2 " [m²K/W] = d_2/λ_2 =	0.050 / 0.556	= 0.09
R_3 " [m²K/W] = d_3/λ_3 =	0.001 / 0.100	= 0.01
R_4 " [m²K/W] = $d_4/(\lambda_{4a} * A + \lambda_{4b} * B)$ =	0.090 /(0.035 * 87.50% + 0.130 * 12.50%)	= 1.93
R_5 " [m²K/W] = d_5/λ_5 =	0.010 / 0.250	= 0.04
R_{si} [m²K/W]		= 0.13

$$R_T'' = \Sigma R_i'' + R_{si} + R_{se} = 2.33\ m^2K/W$$

GIB® Wall Bracing Calculation Sheet A — single storey — V85A

GIB® EzyBrace™
GIB® Bracing Systems, 2006

Job Details

Name	Thomson & Baxter House	
Street and Number	7 Swindon lane	
Lot and DP Number	Lot 6 DP7015	
City/Town/District	Amberley	
Designer and date	David Barker	15-May-08
Company Name	Smart Plans Limited	

Building Specification

Location of Storey	single	
Floor Loading	2 kPa	
Foundation Type	slab	
Building Height to Apex (m)	6	
Roof Height above Eaves (m)	3	
Stud Height (m)	2.4	
Cladding Weight (top or single)	heavy	
Cladding Weight (lower)	light	*not applicable (single storey building)*
Cladding Weight (subfloor)	light	*not applicable (slab)*
Roof Weight	light	
Roof Pitch (degrees)	25-45	
Room in Roof Space	no	
Building Length (m)	19.97	*Use roof length including eaves*
Building Width (m)	15.16	*Use roof length including eaves*
Gross Building Plan Area (m2)	203	

Building Location

Wind Zone	***High***	**Earthquake Zone**
Region	R1	A
Terrain	Coastal	
Exposure	Exposed	
Topography	Gentle	*Enter at least 'moderate' in a Lee Zone*

Bracing Units required for Wind

per m	subfloor	walls
W along	n/a	78 BUs/m
W across	n/a	78 BUs/m

Totals	subfloor	walls
W along	n/a	1182 BUs
W across	n/a	1558 BUs

Bracing Units required for Earthquake

per m2	subfloor	walls
E	n/a	5.6 BUs/m2

Totals	subfloor	walls
E along	n/a	1137 BUs
E across	n/a	1137 BUs

©Winstone Wallboards Limited, 1999-2006. All rights reserved.

GIB® Wall Bracing Calculation Sheet B — single storey — V85A

GIB® EzyBrace ™ — *GIB® Bracing Systems, 2006*

Along									
Wall or Bracing Line		*Bracing Elements provided*						*Wind*	*Earthq.*
1	2	3	4	5	7	8	6	9W	10EQ
Line Label	Minimum BUs Req/Ach	Bracing Element No.	Supplier	Bracing Type	Element Length L (m)	Element Height H (m)	Angle to Bracing line (degrees)	BUs Achieved	BUs Achieved
A	92	1	Ecoply	SP1	0.745	2.4		75	86
		2	Ecoply	SP1	0.4	2.4		40	46
line totals		3	Ecoply	SP1	0.81	2.4		81	93
W	196	4							
EQ	225	5							
B	70	1	GIB®	BL1	1.2	2.4		150	138
		2	GIB®	GS1a	1.8	2.4		117	99
line totals		3							
W	267	4							
EQ	237	5							
C	70	1	Ecoply	SP1	1	2.4		100	115
		2	Ecoply	SP1	1	2.4		100	115
line totals		3							
W	200	4							
EQ	230	5							
D	70	1	GIB®	GS2	1.7	2.4		119	102
		2	GIB®	GS2	1.6	2.4		112	96
line totals		3							
W	231	4							
EQ	198	5							
E	170	1	GIB®	GS2	1.6	2.4		112	96
		2							
line totals		3							
W	112	4							
EQ	96	5							
F	enter	1	Ecoply	SP1	0.6	2.4		60	69
		2	GIB®	GS1a	2	2.4		130	110
line totals		3							
W	190	4							
EQ	179	5							
G	enter	1							
		2							
line totals		3							
W		4							
EQ		5							
H	enter	1							
		2							
line totals		3							
W		4							
EQ		5							

							Wind	Earthq.
Totals Achieved							1196	1165
							OK	OK
Totals Required (from Sheet A)							1182	1137

GIB® Bracing Systems, 2006

For full construction details see literature GIB® Bracing Systems, 2006

Supplier	System	Minimum Length (m)	BUs W/m	BUs EQ/m
	none			
GIB®	GS1a	1.8	65	55
		2.4	75	65
GIB®	GS2	1.2	70	60
		1.8	80	70
		2.4	90	80
GIB®	BL1	0.4	120	115
		0.6	125	115
GIB®	BL1a	1.8	130	115
GIB®	BLP	0.6	145	135
		0.9	145	145
GIB®	BLG	0.6	145	130
		1.2	150	130
Ecoply	SP1	0.4	100	115
Ecoply	SP2	0.4	90	105
Custom	Custom			
Custom	Custom			
Custom	Custom			
Custom	Custom			
Custom	Custom			
Custom	Custom			
Custom	Custom			
Custom	Custom			
Custom	Custom			
Custom	Custom			

©Winstone Wallboards Limited, 1999-2006. All rights reserved

GIB® Wall Bracing Calculation Sheet B — single storey — V85A

GIB® EzyBrace ™ — *GIB® Bracing Systems, 2006*

Across									
Wall or Bracing Line		*Bracing Elements provided*						*Wind*	*Earthq.*
1	2	3	4	5	7	8	6	9W	10EQ
Line Label	Minimum BUs Req/Ach	Bracing Element No.	Supplier	Bracing Type	Element Length L (m)	Element Height H (m)	Angle to Bracing line (degrees)	BUs Achieved	BUs Achieved
M	60	1	GIB®	GS1a	2	2.4		130	110
		2	Ecoply	SP1	1.8	2.4		180	207
line totals		3							
W	310	4							
EQ	317	5							
N	70	1	GIB®	BL1	1.2	2.4		150	138
		2	GIB®	GS1a	2	2.4		130	110
line totals		3							
W	280	4							
EQ	248	5							
O	70	1	GIB®	GS2	1.2	2.4		84	72
		2	GIB®	BL1	1.2	2.4		150	138
line totals		3	Ecoply	SP1	0.6	2.4		60	69
W	294	4							
EQ	279	5							
P	70	1	GIB®	BL1	0.6	2.4		75	69
		2	Ecoply	SP1	1	2.4		100	115
line totals		3	GIB®	BL1	0.6	2.4		75	69
W	250	4							
EQ	253	5							
Q	70	1	Ecoply	SP1	0.4	2.4		40	46
		2	GIB®	GS2	1.2	2.4		84	72
line totals		3	GIB®	GS2	1.2	2.4		84	72
W	208	4							
EQ	190	5							
R	140	1	GIB®	GS1a	1.8	2.4		117	99
		2	Ecoply	SP1	0.6	2.4		60	69
line totals		3	Ecoply	SP1	0.6	2.4		60	69
W	237	4							
EQ	237	5							
S	enter	1							
		2							
line totals		3							
W		4							
EQ		5							
T	enter	1							
		2							
line totals		3							
W		4							
EQ		5							

WAIRUNUI DISTRICT COUNCIL
Plans and specifications APPROVED.
In accordance with the Building Act
2004 clause 49(1) and the associated
Building Regulations.
Signed .....

	Wind	Earthq.
Totals Achieved	1579	1524
	OK	OK
Totals Required (from Sheet A)	1558	1137

Risk Matrix Calculator for Thomson and Baxter House, Ambeley

North Elevation (Worst case with chimney apron)

	Low	Medium	High	Very High	Subtotals
Wind Zone (NZ3604)	○ low wind zone as described by NZS 3604	○ Medium wind zone as described by NZS 3604	◉ High wind load as described by NZS 3604	○ Very High wind zone as described by NZS 3604	1
Number of Storeys	◉ One	○ Two	○ Three	○ More than two	0
Roof/Wall intersection	○ Roof to wall intersection fully protected (e.g. hip and gable roof with eaves)	○ Roof to wall intersection partly exposed (e.g. hip and gable with no eaves)	○ Roof to wall intersection fully exposed (e.g. parapets, enlosed balustrades or eaves at >90° to vertical with soffit lining)	◉ Roof elements finishing within the boundaries formed by the ext. walls (e.g. lower ends of aprons, chimneys, dormers etc.	5
Eaves Width	○ >600 for single storey	◉ 451-600mm for single storey, or over 600mm for two storey.	○ 101-450mm for single storey, or 451-600mm for two storey, or greater than 600mm above two storey	○ 0-100mm for single storey, or 0-450 for two storey, or less than 600mm above two storey	1
Envelope Complexity	◉ Simple rectangular, L, T or boomerang shaped, with single *cladding type*	○ Moderately complex, angular or curved shapes (e.g. arrowhead) with no more than two *cladding types*	○ Complex, angular or curved shapes (e.g.Y or arrowhead) with multiple cladding types	○ As for high risk, but with junctions not covered in C or F of this table (e.g.box windows, percolas, multi-storey re-entrant shapes etc.	0
Deck Design	◉ None, timber slat deck or porch at ground floor level	○ Fully covered *in plan* by roof, or timber slat deck attached at first or second floor level	○ Enclosed deck exposed in plan or cantilevered at first floor level	○ Enclosed deck exposed in plan or cantilevered at secon floor level or above	0

Risk Score	Direct Fix to Framing	Over nominal 20mm drained cavity
7	*a) Bevel-back timber weatherboards* *b) Vertical timber board and batten* *c) Vertical profiled metal-corrugated only*	*a) Masonry veneer* *b) Stucco* *c) Horizontal profiled metal-corrugated and trapezoidal only* *d) Rusticated weatherboards* *e) Fibre cement weatherboards* *f) Fibre cement sheet* *g) Plywood sheet* *h) EIFS*

Hurunui District Council
Building Consent Number

BC / 080237 _

Please quote this number with all inquiries and inspection bookings.

SPECIFICATION

of work to be done and materials to be used in carrying out the works shown on the accompanying drawings

Thomson & Baxter House
(project name)

Lot 6 DP 70175
7 Swindon Lane
Amberley
(project address)

Mike Greer Homes Ltd
(owners name)

HURUNUI DISTRICT COUNCIL
These plans and specifications must be read with the conditions attached to the Building Consent
All Construction work and materials used shall comply with the New Zealand Building Code, notwithstanding any inconsistencies which may occur in the drawings and specifications.

Job Number: N1019

Date: 19/05/08

1214 PRELIMINARIES AND GENERAL (NBCG 2003)

1. THE PROJECT

Description of the work

1.2 READ ALL SECTIONS TOGETHER
Read all sections together and read the PRELIMINARIES AND GENERAL section with all other sections.

Personnel

1.3 PARTIES ASSOCIATED WITH THE PROJECT
Refer to PROJECT PERSONNEL.

Site description

1.5 LEGAL DESCRIPTION
The site of the works, the street address and the legal description are shown on the drawings.

Site features and restrictions

1.7 GROUND CONDITIONS
Refer to the soils investigation report included with this specification.

2. DOCUMENTATION

Contract related issues

2.1 NOMINATED SUBCONTRACTORS
Refer to NZIA NBCG:2003, rule 41 Contractor can appoint subcontractors.

2.2 SEPARATE CONTRACTORS
Refer to NZIA NBCG:2003, rule 50 Principal can engage other people.

2.3 PRINCIPAL SUPPLY ITEMS
Refer to NZIA NBCG:2003, rule 40 Contractor must supply all requirements.

2.5 INCONSISTENCIES IN CONTRACT DOCUMENTS
Refer to NZIA NBCG G:2003 rule 6 in that document for the method of handling inconsistencies, errors or omissions.

Specification structure

2.7 SPECIFICATION STRUCTURE
The designation and numbering of individual specification sections follows the CBI (Co-ordinated Building Information) system for the co-ordination and classification of construction information. Sections are for reference and convenience only and do not profess to define subcontracts.

Read all sections together and read 1214 PRELIMINARIES AND GENERAL with all other sections.

Construction documents

Interpretations and definitions

2.9 INTERPRETATIONS

Required:	Required by the documents, or by a statutory authority.
Proprietary:	Identifiable by naming the manufacturer, supplier, installer, trade name, brand name, catalogue or reference number.
Provide and fix:	"Provide" or "fix" or "supply" or "fix" if used separately mean provide and fix unless explicitly stated otherwise.

Review: Review by the principal is for general compliance only. Review does not remove the need for the contractor to comply with the stated requirements, details and specifications of the manufacturers and suppliers of individual components, materials and finishes. Neither can the review be construed as authorising departures from the contract documents.

2.10 PERSONNEL

Owner: The person defined as "owner" in the New Zealand Building Code.
Principal: The person defined as "principal" in the conditions of contract.
Contractor: The person contracted by the principal to carry out the contract.

2.11 ABBREVIATIONS

The following abbreviations are used throughout the specification:

AAMA	American Architectural Manufacturers Association
AS	Australian Standard
AS/NZS	Joint Australian/New Zealand Standard
ASTM	American Society for Testing and Materials
AWCINZ	Association of Wall and Ceiling Industries of New Zealand Inc
BCITO	Building and Construction Industry Training Organisation
BRANZ	Building Research Association of New Zealand
BS	British Standard
CSIRO	Commonwealth Scientific and Industrial Research Organisation
HERA	Heavy Engineering Research Association
MPNZA	Master Painters New Zealand Association Inc
NZBC	New Zealand Building Code
NZS	New Zealand Standard
NZS/AS	Joint New Zealand/Australian Standard
TNZ	Transit New Zealand

2.12 DEFINED WORDS

Words defined in the conditions of contract, New Zealand Standards, or other reference documents, to have the same interpretation and meaning when used in their lower case, title case or upper case form in the specification text.

2.13 PROPOSED SUBSTITUTIONS

A substitution may be proposed where specified products are not available, or if substitute products are brought to the attention of and are considered by the principal to be equivalent or superior to those specified. Except where a specified product is not available, the principal is not bound to accept any substitutions.

2.14 NOTIFICATION OF SUBSTITUTIONS

Notify any proposed substitution of specified products. Notification to include but not be limited to:

- Product identification
- Detailed comparison between the properties and characteristics of the specified product and the proposed substitution
- Statement of NZBC compliance, including durability
- Manufacturer's name, address, telephone and facsimile numbers, website and email address
- All current manufacturer's literature on the product
- Accreditations and appraisals available
- Reference standards
- Product limitations
- Samples
- List of existing installations in the vicinity of the project

and

- Any changes required to the programme including any extension of time required
- Allowance (time and cost) for re-design and documentation (if applicable)

- Allowance (time and cost) for obtaining an amendment to the Building Consent (if applicable)
- An assessment of any change in cost associated with the proposed substitution

2.15 APPROVAL OF SUBSTITUTIONS
Approval of substitutions to be in writing.

2.16 MANUFACTURER'S AND SUPPLIER'S REQUIREMENTS
Manufacturer's and supplier's requirements, instructions, specifications or details mean those issued by them for their particular material, product or component and are the latest edition.

2.17 MANUFACTURER'S AND SUPPLIER'S DOCUMENTS
Refer to individual sections for a detailed list of manufacturer's and supplier's documents relating to work on this project. Retain current copies of the documents listed, and all other relevant manufacturer's technical literature, on site. Make this information available to all personnel and ensure they are familiar with requirements for handling, storing, preparing for, fixing and finishing all products before commencing work. Provide a copy of all listed manufacturer's literature to the principal.

Reference documents

2.18 REFERENCED DOCUMENTS
Throughout this specification, reference is made to various New Zealand Building Code (NZBC) acceptable solutions and verification methods for criteria and/or methods used to establish compliance with the Building Act.

Reference is also made to various Standards produced by Standards New Zealand (NZS, AS/NZS, NZS/AS), Transit New Zealand specifications (TNZ) to overseas standards and to listed Acts, Regulations and various industry codes of practice and practice guides. The latest edition (including amendments and provisional editions) at the date of this specification applies unless stated otherwise.

It is the responsibility of the contractor to be familiar with the materials and expert in the techniques quoted in these publications.

Documents cited both directly and within other cited publications are deemed to form part of this specification. However, this specification takes precedence in the event of it being at variance with the cited documents, with the resolution of any variance being confirmed by the principal in writing and then notified to the Building Consent Authority for consent prior to any work proceeding.

2.19 DOCUMENTS REFERRED TO
Documents referred to in this preliminaries and general section are:

NZBC F4/AS1	Safety from falling, 2.0 Construction site barriers
NZBC F5/AS1	Construction and demolition hazards, 1.0 Work-site barriers
NZS 6803	Acoustics - Construction Noise

Building Act 2004
Building Regulations 1992
Health and Safety in Employment Act 1992
Health and Safety in Employment Regulations 1995
New Zealand Building Code 1992
Resource Management Act 1991
Smoke Free Environments Act 1990

OSH	Approved code of practice for the safe erection and use of scaffolding
OSH	Guidelines for the provision of facilities and general safety in the construction industry

Building Consent Authority documentation

2.20 BUILDING CONSENT COMPLIANCE

It is an offence under the Building Act 2004 to carry out any work not in accordance with the building consent.

- The resolution of matters concerning code compliance to be referred to the principal for a direction in writing and then to the Building Consent Authority for consent.
- Where any alteration is requested by the territorial or any other authority, do not undertake such alteration until the matter has been referred to the principal for direction.

2.21 BUILDING CONSENT

Obtain the original or copies of the building consent forms and documents from the owner and keep them on site. Liaise with the Building Consent Authority for all notices to be given and all inspections required during construction to ensure compliance. Return the consent form and documents to the owner on completion.

2.22 PRODUCER STATEMENTS

When producer statements verifying construction are required, provide copies to both the Building Consent Authority and the principal. Producer statements to be in the form required by the Building Consent Authority.

Guarantees

2.27 MASTER BUILD SERVICES LTD GUARANTEE

Provide a Master Build New Homes or Alterations & Additions Guarantee including all costs in the contract price and covering loss of deposit, completion, inspection, execution and material defects under the terms of the guarantee offered by Master Build Services Ltd. Execute with all three signatories: owner, registered master builder and Master Build Services Ltd, before commencing the contract works.

2.30 WEATHERTIGHTNESS AND WATERTIGHTNESS WARRANTY

A warranty is required from the contractor for a minimum period of 2 years, covering the weathertightness of the complete building envelope and the watertightness of all liquid supply and disposal systems and fittings. This general warranty is in addition to any specific warranties required.

2.31 TRADE WARRANTIES

Where specific trade warranties are offered covering materials and/or execution of proprietary products or complete installations, provide all such warranties to the principal.

2.32 SCHEDULE OF WARRANTIES

The following is a summary of the warranties and warranty periods called for in the following work sections (refer also to TRADE WARRANTIES):

1212	Weathertightness and watertightness	2 years
4311	Profiled metal roofing	15 years/5 years
4521	Aluminium windows and doors	2 years
6211	Wall tiling	2 years
6211J	Jacobsen wall tiling	2 years
6221	Floor tiling	2 years
6511	Carpeting	5 years/1 year
6711	Painting	3 years
7123	Hot and cold water system	2 years

3. ESTABLISHMENT

Notices and approvals

3.1 STATUTORY OBLIGATIONS

Comply with all statutory obligations and regulations of regulatory bodies controlling the execution of the works.

3.2 BUILDING CONSENT AUTHORITY AND NETWORK UTILITY APPROVALS
Attend on Building Consent Authority officers, statutory and network utility inspectors, as necessary to obtain approvals (in addition to building consent approval) for and the satisfactory completion of, the works.

3.3 NOTIFY NETWORK UTILITY OPERATORS
Notify all network utility operators of proposed works before commencing site operations. Ascertain location of services or confirm that none exist in the vicinity of the works. Take all necessary precautions to avoid damage to existing services.

Site preparation

3.5 SITE AND SOIL SURVEYS
Carry out all investigations necessary and peruse all information available to determine ground conditions and likely ground performance both on the site and adjacent to it. Also refer to the territorial authority project information memorandum (PIM).

Temporary construction

3.7 TEMPORARY ROADS
Provide as necessary all temporary roads, tracks, crossings and hard standing required for the efficient execution of the works and maintain to approval.

3.8 TEMPORARY BUILDINGS
Provide as necessary temporary sheds, offices, lunch rooms, sanitary accommodation and other temporary buildings required for storage, management of the works, for the use of workers while on site and as required by Acts and Regulations.

3.9 CONSULTANTS TEMPORARY SITE OFFICE
Provide temporary accommodation and facilities for use by consultants while on site.

3.10 HOARDINGS, GANTRIES, LIGHTING
Provide temporary fencing, hoardings, planked footways, guard rails, gantries and lighting as necessary to protect the public and others, for the proper execution of the works and to meet the requirements of territorial or other authority.

4. TEMPORARY WORKS AND SERVICES

Temporary works

4.1 COMPLY WITH NEW ZEALAND BUILDING CODE
Refer to New Zealand Building Code clauses and approved document paragraphs for the criteria and/or methods that must be used in this section to establish compliance with the code.

4.3 MAINTENANCE OF TEMPORARY WORKS
Maintain alter, adapt and move temporary works and services as necessary. Clear away when no longer required and make good.

Temporary services

4.4 WATER
Provide clean, fresh water for the works and make arrangements for distributing about the site.

4.5 ELECTRICITY
Nominate the person to install and be responsible for the complete temporary electrical installation. The name and designation of the person responsible is to be displayed prominently and close to the main switch or circuit breaker.

Inspect and overhaul the installation at such intervals as are prescribed by the network utility operator but not exceeding three monthly intervals.

4.6 TELEPHONE
Provide on site temporary telephone facilities.

4.9 EXISTING SITE SERVICES
Make good all damage to existing roads, footpaths, grounds, sewers or other services, caused in carrying out the contract works.

Scaffolding and shoring

4.11 GENERAL SCAFFOLDING
Provide as necessary general scaffolding for the efficient execution of the works. Placement, erection and structure to be by certified suppliers/erectors and approved by the OSH inspectors before being used. Comply with the OSH publication: "Approved code of practice for the safe erection and use of scaffolding."

Care and protection

4.12 PROTECT EXISTING BUILDINGS
Protect existing buildings and other designated features which are to remain in position during the execution of the works.

4.13 PROTECT EXISTING TREES
Protect existing trees, fences, gates, walls, gardens and other designated site features which are to remain in position during the execution of the works.

Construct a temporary fence at the outer edge of the drip line of trees to be protected. Comply with territorial authority requirements.

4.14 PROVIDE SEDIMENT AND SILT RUN OFF PROTECTION
Provide appropriate measures to prevent or minimise sediment generation and silt run off. Comply with territorial and other authority requirements relating to carrying out earthworks.

Prevent silt run off by:
- exposing only as much ground as required at any time
- providing run off channels, contour drains or earth bunds to divert clean water away from the site on to stable sealed or grassed ground
- capture silt by the use of silt fences, vegetation buffer strips, sediment ponds or earth bunds.

Provide sediment control by:
- earth bunds constructed across the slope to control and detain run off
- silt fences constructed using filter fabric stretched between posts at a maximum of 1 metre spacing

Pump water from trenches and other areas of the site using methods to prevent sediment entering any drain or watercourse. Filter dirty water before discharging into drainage system.

4.15 STORAGE
Provide temporary storage areas and protective covers and screens. Fillet stack and protect all framing and structural members from moisture and contamination. Completely protect finishing materials from the weather and damage and store in accordance with the manufacturer's requirements. Protect fabricated elements from the weather and damage, and store in accordance with suppliers' requirements.

4.16 SAFEGUARD THE SITE, THE WORKS AND MATERIALS
Safeguard the site, the works, materials and plant from damage and theft. Take all precautions to prevent unauthorised access, including access outside working hours, to the site, the works and adjoining property.

4.17 CONSTRUCTION KEYING AND SECURITY
Provide locksets with temporary keying, or install with the cylinders removed.

4.18 MINIMISE DELAYS DUE TO WEATHER
Use appropriate techniques and methods to prevent damage and minimise delays due to weather.

Health and safety

5.13 HEALTH AND SAFETY
Refer to the requirements of the Health and Safety in Employment Act 1992. Comply with all relevant New Zealand safety legislation.

Take all practical steps to make the site and the contract works safe and to provide and maintain a safe working environment. Ensure that all those working on or visiting the site are aware of the rules governing site safety, are properly supervised and are not unnecessarily exposed to hazards.

Identify any significant hazards.

Maintain proper procedures for dealing with any emergencies that may arise. Immediately investigate accidents, identify their cause and maintain a register of accidents and serious harm. Provide a copy of any report which the contractor is required to make to a public authority on any accident which is associated with carrying out the contract works and results in serious harm to any person.

Refer to individual work sections for detailed requirements on this project.

5.14 SUSPENSION OF HAZARDOUS WORK
On the request of the principal, acting on reasonable grounds, suspend any identified hazardous activities and proceed to eliminate, isolate or minimise them in order to comply with the Act, without prejudice to any other rights of the principal under the contract.

5.15 SITE SAFETY PERSON
Appoint a suitably qualified site safety person to co-ordinate site safety and to attend all site meetings.

5.16 HEALTH AND SAFETY PLAN
Prepare and submit to the principal before commencing work on site a health and safety plan. Include in that plan all people on site and the general public, as well as the following items and any other necessary item:
- identification of existing and potential construction hazards and risks
- safety procedures to eliminate, isolate or minimise construction hazards
- the equipment to be used to minimise the hazards
- the maintenance of a register of hazards for the site
- the name and qualifications of the site safety person
- emergency procedures
- first aid facilities and safety equipment
- the methodology for notifying, recording and investigating accidents and injuries.

Keep a copy of the plan in the site office.

5.17 CARRY OUT
Carry out all construction operations in accordance with the submitted health and safety plan.

5.18 INFORM EMPLOYEES OF HAZARDS
Inform employees and others on the site of:
- hazards they may be exposed to while working
- hazards they may create while working which could harm others
- how these hazards may be minimised
- emergency procedures
- the location of first aid facilities and safety equipment.

5.19 HEALTH AND SAFETY REGULATIONS, CODES AND GUIDES

Comply with:

- Relevant New Zealand safety legislation including "Health and Safety in Employment Regulations 1995".
- OSH publications including "Guidelines for the provision of facilities for general safety in the construction industry".
- Relevant codes of practice, guides, guidelines and standards.

Until further regulations are made under the Health and Safety in Employment Act 1992 to cover them, the enactments repealed by the Act continue in force until revoked.

5.21 POWDER-ACTUATED FASTENING TOOLS

Powder-actuated fastening tools to be used only by workers holding current certificates of competence in their name, issued under the requirements of the Health and Safety in Employment Regulations 1995.

5.22 SMOKE FREE REQUIREMENTS

Do not smoke on site except in a designated location, in accordance with the Smoke Free Environments Act 1990. This location to be determined by the contractor with the approval of the principal.

5.23 RESTRICTIONS

Do not:

- light rubbish fires on the site
- bring dogs on to or near the site
- bring radios/audio players on to the site.

6. CONSTRUCTION

Quality control and assurance

6.1 QUALITY ASSURANCE

Carry out and record regular checks of material quality and accuracy, including:

- Concrete quality and finish.
- Dimensional accuracy of structural column locations (following completion of foundations).
- All perimeter columns and frames for plumb.
- Levels of all floors relative to the site datum.
- Framing timber moisture content.

Where any material, quality or dimension falls outside specified or required tolerances, obtain written confirmation from the principal and then confirm remedial action with the Building Consent Authority when building consent approval is affected.

Provide all materials, plant, attendances, supervision, inspections and programming to ensure the required quality standards are met by all project personnel.

Noise and nuisance

6.2 LIMIT CONSTRUCTION NOISE

Minimise the effects of noise generation by including in the planning of the work such factors as placing of plant, programming the sequence of operations and other management functions. Limit construction noise to comply with the requirements of NZS 6803, the requirements of the Resource Management Act sections 326, 327 and 328 and the Health and Safety in Employment Regulations clause 11.

6.3 ACCEPTABLE NOISE LEVELS

Refer to NZS 6803 Tables 2 and 3 for the upper limits of construction work noise in residential and industrial areas over the various time periods, particularly 0730 to 1800 hours. Note also the allowed adjustments and exemptions in Section 6. Do not exceed these limits.

6.4 EXCESSIVE NOISE
Discuss with neighbours any noise generation from the site liable to constitute a problem. Explain to them the means being used to minimise excessive noise and establish with them the timings most suitable for the noise generating work to be carried on.

Discuss with any complainant the timings and the means being used to minimise noise. Modify these means to accommodate particular circumstances. Finally, determine the sound level at the location under discussion using methods and observation reporting as laid down in NZS 6803. If the noise level is above the upper limits of tables 2 and 3, cease the noise generating operation and remedy the problem.

6.6 INCONVENIENCE TO OTHERS
When the works are to be carried out in or around occupied premises, ascertain the nature and times of occupation and use. Carry out the works with minimum inconvenience, nuisance and danger to occupants and users.

6.7 DIRT AND DROPPINGS
Dirt and droppings deposited on public or private thoroughfares from vehicles servicing the site are to be removed by the contractor to the satisfaction of the appropriate authorities and the principal.

6.8 DAMAGE AND NUISANCE
Take all precautions to prevent damage and nuisance from water, fire, smoke, dust, rubbish and all other causes resulting from the construction works.

Set-out

6.9 SET-OUT BY LICENSED CADASTRAL SURVEYOR
Before commencing construction provide the principal with a certificate prepared by a licensed cadastral surveyor that the set-out is complete and that the building is accurately placed on the site.

During construction provide the principal with a certificate, prepared by the same licensed cadastral surveyor confirming the set-out of the foundations and grid lines.

6.10 CONFORM WITH THE DRAWINGS
Set out the work to conform with the drawings. Establish a permanent site datum to confirm the proposed building ground floor level and its relationship to all other existing and new building levels.

6.11 DIMENSIONS AND LEVELS
Dimensions and levels on the site plan and other drawings to be verified by a licensed cadastral surveyor to determine all lines and levels and the set-out of the building. Necessary adjustments are to be determined and agreed to by the principal before proceeding further.

6.12 USE OF SET-OUT INSTRUMENTS
Permit without charge, the use of instruments already on site for checking, setting out and levels.

6.13 CHECK ALL DIMENSIONS
Check all dimensions both on drawings and site, particularly the correlation between components and work in place.

6.14 TAKE ALL DIMENSIONS
Take all dimensions on drawings to be between structural elements before linings or finishes, unless clearly stated otherwise.

Execution

6.15 BEFORE COMMENCING
Before commencing any part of the work carefully examine the previous work on which it may depend. Report in writing to the principal defects that may affect the quality of the

proposed work and obtain instructions. Commencing work on any part means that previous work is accepted as being satisfactory for work of the required standard.

6.16 QUALITY OF EXECUTION
All work to be level, plumb, and true to line and face. Employ only experienced workers familiar with the materials and techniques specified.

Materials

6.17 NEW PRODUCTS AND MATERIALS
Materials and products to be new unless stated otherwise, of the specified, and complying with all cited documents.

6.18 COMPATIBILITY OF MATERIALS AND FINISHES
Ensure all parts of a construction or finish are compatible and their individual use approved by the manufacturers and suppliers of other parts of the system. Source all parts of a system from a single manufacturer or supplier.

6.19 STORING PRODUCTS AND MATERIALS
Take delivery of and store products, materials and components in accordance with codes of practice and the product manufacturer's or supplier's stated requirements. Maintain the proper condition of any protective packaging, wrappings or supports during delivery, unloading and storage.

6.20 HANDLING PRODUCTS AND MATERIALS
Handle products, materials and components in accordance with codes of practice and the manufacturer's or supplier's stated guidelines. Avoid distortion and any contact with potentially damaging surfaces or conditions.

6.21 SUBSTRATE CONDITIONS
Ensure substrate conditions are within the manufacturer's or supplier's stated guidelines both before and during the installation of any material, product or system. Obtain written instructions on the necessary action to rectify unsatisfactory conditions.

6.22 INSTALLING PRODUCTS AND MATERIALS
Install in accordance with the manufacturer's or supplier's technical literature. Ensure that all installers are familiar with the required substrate conditions and the manufacturer's or supplier's specified preparation, fixing and finishing techniques.

6.23 COMPLY WITH STANDARDS
Comply with the relevant and/or cited Standard for any material or component. Obtain certificates of compliance when requested by the principal.

6.24 CONDITION OF MATERIALS AND COMPONENTS
To be in perfect condition when incorporated into the work.

6.25 INCOMPATIBLE MATERIALS AND METALS
Separate incompatible materials and metals with separation layers, sleeves or gaskets of plastic film, bituminous felt or mastic or paint coatings, installed so that none are visible on exposed surfaces.

Final presentation and cleaning

6.29 REMOVE TEMPORARY PROTECTION
Remove all temporary markings, coverings, labels and protective wrappings unless instructed otherwise.

6.30 REPLACE DAMAGED MATERIALS
Replace all materials or component damaged during the works to the standard of and integral with the original.

6.31 COMPLETE ALL SERVICES

Ensure all services are complete and operational, with all temporary labelling removed, required labelling fixed and service instructions provided.

6.32 CLEAN

Use a commercial cleaning firm to clean the whole of the interior of the building, including all appliances, equipment, fittings, surfaces and finishes to leave it without any blemish.

Clean and wash down all external surfaces to remove dirt, debris and marking. Clean all interior surfaces including cabinetwork, joinery, sanitary and hardware items. Vacuum or polish all floor finishes. Clean and polish all glass, both sides.

All cleaning materials used on the project to be biodegradable and non-toxic.

2221 EXCAVATION

1. GENERAL

This section deals with the excavating required for the building works, removing surface soils and the disposal of excavated material.

Documents

1.2 DOCUMENTS REFERRED TO

Documents referred to in this section are:

NZS 4402	Methods of testing soils for civil engineering purposes
OSH	Approved code of practice for safety in excavation and shafts for foundations

Documents listed above and cited in the clauses that follow are part of this specification. However, this specification takes precedence in the event of it being at variance with the cited document.

2. PRODUCTS

Materials

2.1 TOPSOIL

Weathered soil, with organic inclusions capable of supporting the growth of vegetation.

2.2 CUT MATERIAL

Consisting of sands, gravels, sedimentary materials, clays, scoria and similar deposits.

2.3 ROCK

Defined as material encountered in excavations which because of its size or position can be removed only by breaking up by explosives or mechanical plant such as jack hammers or percussion drills.

2.4 UNCONTROLLED FILL

Variable fill material placed with little or no compaction control.

2.5 EXCAVATED FILL

Material from other formations in the excavation which may be selected and approved as suitable for filling and complying with NZS 4402 by having grading and moisture content properties that will allow compaction to 95% of maximum density.

3. EXECUTION

Conditions

3.1 REPORT

Report any survey pegs, bench marks, and the like on any features, leaving them undisturbed until approval is given for removal.

3.2 RETAINED FEATURES

Refer to SELECTIONS/drawings for those features to be retained. Mark out those features to be retained with 1 metre high 50 mm x 50 mm timber stakes with yellow plastic tape between, to eliminate accidental damage.

3.3 COMPLY

Comply with the requirements of the OSH publication: Approved code of practice for safety in excavation and shafts for foundations.

3.4 WORK BY OTHERS

Before taking over work done on the site by others check all levels and conditions and report any discrepancies affecting further work.

3.5 EXISTING SERVICES AND FOUNDATIONS

Locate underground services and foundations before work is started. Any information provided regarding the location of these services and foundations is given from available records but with no guarantee of accuracy as regards alignment or depth. Furthermore no guarantee is given or implied that the information provided covers all existing services and foundations. Make good at no extra cost damage to existing services to the satisfaction of the appropriate network utility operator. Protect existing roads, footpaths, gutters, crossings etc from damage during work.

3.6 EXCAVATION NEAR TREES

Do not excavate or remove topsoil within the drip line of retained trees unless specifically directed. If excavation is directed, use hand methods, taking care to avoid damage to roots. Do not cut roots greater than 50 mm diameter. Do not stockpile spoil against tree trunks or beneath the drip line of retained trees. Report any damage to tree boles or branches, with necessary remedial work by an approved tree surgeon.

3.7 KEEP FREE OF WATER

Keep excavations free from water and keep water from excavations clear of other construction work.

3.8 TERRITORIAL AUTHORITY REQUIREMENTS

Obtain from the territorial authority requirements for the method of discharging water from the site.

3.9 FORM SUMPS

Form sumps outside the line of foundations and deep enough to drain excavations. Pump from sumps without disturbing excavations or any material in place.

3.10 SILT CONTROL

Undertake silt control measures required by territorial authorities and network utility operators in relation to design, location and discharge into the drainage system.

Application

3.11 STRIP TOPSOIL

Strip topsoil carefully over the whole site and stockpile where directed on the site, on the prepared subgrade, for re-spreading at the completion of the contract.

3.12 STRIP TO SUBGRADE

Strip the soil over the whole site to form a subgrade generally, but at a minimum of 200 mm below the original ground level. Leave the subgrade level, clear of all loose material and with no impediment for the excavation work.

3.17 EXCAVATION GENERALLY

Excavate for pads, strip foundations and tie beams to the profiles and levels shown on the drawings. Allow clearance for working space and formwork as necessary. Trim to required profiles, falls and levels. If pouring against natural ground excavate an extra 25 mm that side to provide 75 mm minimum cover to reinforcement horizontally. Bench surface of sloping ground to receive filling.

3.18 OVER EXCAVATION

Make good with well compacted backfill.

3.19 EXCAVATED BACKFILL

Stockpile selected excavated backfill on site where directed so that it does not impede continuing works until it is required.

Finishing

3.20 BATTERS, TEMPORARY PROTECTION

Protect batters with a change of level between crest and toe of more than 1.5 metres from weather erosion with a waterproof covering of either hessian and tar, or heavy duty black

polythene sheet. Seal at joints and securely fix down at crest and toe. Maintain coverings in good condition until the ground is secured by permanent construction.

Completion

3.21 LEAVE
Leave work to the standard required by following procedures.

3.22 SURPLUS TOPSOIL
Remove unwanted stripped soil from the site continually as the work proceeds. Clean up continually any soil if dropped on footpaths or roads.

3.23 SURPLUS MATERIAL
Remove surplus excavated material from the site continually as the excavation proceeds. Clean up continually any excavated material dropped on footpaths or roads.

3100 CONCRETE GENERAL

1. GENERAL

This section deals general matters relating to all aspects of concrete work.

Related work

1.1 RELATED SECTIONS

Refer to 3111 FORMWORK FOR CONCRETE for formwork
Refer to 3112 REINFORCEMENT FOR CONCRETE for reinforcement
Refer to 3121 CONCRETE PLACEMENT for concrete placing
Refer to 3124 FINISHES TO WET CONCRETE for concrete finishing
Refer to 3129 CONCRETE PRODUCTION for concrete production

Documents

1.2 DOCUMENTS REFERRED TO

Documents referred to in the above sections are:

AS 1366.3	Rigid cellular plastics for thermal insulation - Rigid cellular polystyrene – Moulded (RC/PS – M)
AS/NZS 1554.3	Structural steel welding - Welding of reinforcing steel
AS/NZS 1860.1	Particleboard flooring - Specifications
AS/NZS 2269	Plywood – Structural
NZS 3101.1	Concrete structures standard
NZS 3104	Specification for concrete production
NZS 3109	Concrete construction *
NZS 3112.1	Methods of test for concrete - Tests relating to fresh concrete
NZS 3113	Chemical admixtures for concrete
NZS 3114	Specification for concrete surface finishes
NZS 3117	Pigments for Portland cement and Portland cement products
NZS 3121	Specification for water and aggregate for concrete
NZS 3122	Specification for Portland and blended cements (General and special purpose)
NZS 3125	Specification for Portland-limestone filler cement
NZS 3631	New Zealand timber grading rules
AS/NZS 4357	Structural laminated veneer lumber
AS/NZS 4671	Steel reinforcing materials
AS/NZS ISO 9002	Quality systems – Model for quality assurance in production, installation and servicing

Alkali aggregate reaction (Cement and Concrete Association)
*** A copy of NZS 3109 Concrete construction, must be held on site.**

Documents listed above and cited in the clauses that follow are part of this specification. However, this specification takes precedence in the event of it being at variance with the cited document.

Requirements

1.4 QUALIFICATIONS

Workers to be experienced, competent and familiar in the fabrication and erection of formwork and with the materials and the techniques specified.

1.5 INSPECTIONS

Refer to SELECTIONS for type of inspection.

Requirements

1.6 RECORDS

Make and keep record of mix, time, date and location of each pour and make available on request together with delivery dockets. Cross reference delivery dockets in pour records.

1.7 PRODUCER STATEMENTS
Provide Producer Statements where required by the Building Consent Authority and where required by this specification.

Performance

1.10 CONTROL TESTS
Carry out slump tests, yield tests and air content tests to NZS 3112.1, sections 4, 5, and 9 respectively and evaluate to NZS 3104: section 2.15, Control tests and their evaluation, keeping a record of all tests at the plant and making them available on request.

1.11 STRENGTH TESTS
Carry out to NZS 3112.2, section 10 and evaluate to NZS 3104: section 2.15, Control tests and their evaluation, keeping a record of all tests at the plant and making them available on request.

1.12 QUALITY ASSURANCE
Carry out the whole of this work to the requirements of NZS 3109 and under the regime of a quality systems model for quality assurance in production and erection to AS/NZS ISO 9002.

Quality assurance procedures to include all aspects of concrete construction including:
- Formwork quality
- Reinforcing steel placing
- Cast in items
- Concrete quality
- Concrete finishes
- Construction tolerances

Advise name of the suitably experienced and qualified representative who is responsible for quality control of the concrete work. The representative is to sign a written quality control checklist for each on site concrete pour. Provide a copy to the construction reviewer in sufficient time for a pre pour inspection.

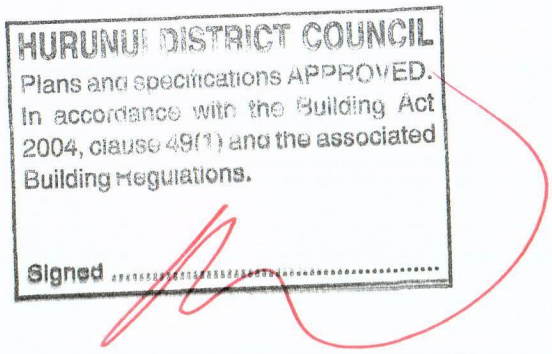

3111 FORMWORK FOR CONCRETE

1. GENERAL

This section deals with the design and construction of formwork necessary to support and confine the concrete and shape it to the required dimensions.

Related work

1.1 RELATED SECTIONS

Refer to 3100 CONCRETE GENERAL for general matters
Refer to 3112 REINFORCEMENT FOR CONCRETE for reinforcement
Refer to 3121 CONCRETE PLACEMENT for concrete placing
Refer to 3124 FINISHES TO WET CONCRETE for concrete finishing
Refer to 3129 CONCRETE PRODUCTION for concrete production

Requirements

1.2 FORMWORK DRAWINGS

Provide details of formwork showing but not limited to:
- position and type of construction joints
- layout of panel joints where exposed to view
- layout of form tie holes where exposed to view
- means of sealing panel joints, tie holes and construction joints
- form surfaces for each finish specified.

2. PRODUCTS

Materials

2.1 TIMBER FALSEWORK

No. 2 framing radiata pine to NZS 3631 or as required to construct the required formwork.

2.2 TIMBER BOARDS

Dressing or merchantable grade radiata pine to NZS 3631 for shutter face, to obtain the concrete finish specified.

2.3 LAMINATED VENEER LUMBER FORMWORK BEAMS

Laminated veneer lumber to AS/NZS 4357, sizes and spacing as recommended in span tables in the manufacturer's literature.

2.4 PROPRIETARY STEEL

An approved proprietary steel formwork and shutter system.

2.5 STRUCTURAL PLYWOOD

To AS/NZS 2269 for shutter face with plywood grade as necessary to obtain the concrete finish specified.

2.6 DAMPPROOF MEMBRANE

0.25 mm Minimum polyethylene to NZS 3604: clause 7.5.4, Damp-proof membrane.

2.7 SHEET DAMPPROOFING

Rubberised bitumen membrane specifically produced for waterproofing applications, possessing high resistance to water, water vapour and gas permeability and resistant to the attack of ground bacteria and ageing effects, joined using proprietary techniques and applied by the use of special adhesives. Thickness not less than 1.5 mm.

2.8 BRUSH ON LIQUID-APPLIED MEMBRANE

Fully stable, water-based colloidal bitumen emulsion.

2.9 CELLULAR POLYSTYRENE INSULATION

Proprietary expanded polystyrene (EPS) foam board to AS 1366 part 3.

Finishes

2.10 RELEASE AGENT
A release agent which will not stain or adhere to the concrete, contaminate reinforcing steel or construction joints, or have a detrimental effect on any applied finishes.

2.11 SURFACE RETARDER
A surface retarder that will not have long term detrimental effects on the concrete, or on any applied finishes.

3. EXECUTION

Conditions

3.1 PROVIDE ALL FORMWORK
Provide all formwork necessary to support and confine the concrete and shape it to the required dimensions. Use pre sealed plywood specifically manufactured for use as formwork or seal with 2 coats of polyurethane.

3.2 ACCURACY
Unless stated otherwise on the drawings permissible deviations from established lines, grades, dimensions and cambers to remain within the tolerances laid down in NZS 3109: table 5.1, Tolerances for precast components and table 5.2, Tolerances for in situ construction.

3.3 TOLERANCES OF CONCRETE SURFACE FINISHES
Unless stated otherwise on the drawings, permissible abrupt, offset and gradual deviations for the specified surface finish to remain within the tolerances laid down in NZS 3114: table 3, Tolerances for abrupt deviations or offsets and gradual deviations.

3.4 LOADINGS
Design and construct formwork and falsework in accordance with sound engineering principles to withstand the worst combination of:
- dead loads of formwork, reinforcement, concrete and precast elements such as floor planks
- construction loads including dynamic effects of placing, compacting and construction traffic
- wind and snow loads.

3.5 FALSEWORK
Carry strutting down to a construction sufficiently strong and stable to afford the required support without permissible stress or deflections being exceeded. Prop through to other floors if the construction load on a particular floor exceeds the design load.

3.6 CAMBERS
Cambers shown on the drawings or specified, relate to the concrete immediately before formwork is struck. Unless otherwise shown on drawings, construct forms to achieve the following:
- maximum deflection of face materials between strutting: $^{1}/_{240}{}^{th}$ of span, but not exceeding 6 mm, or within the tolerances specified for surface finish in CONCRETE PLACEMENT
- maximum deflection of beams: $^{1}/_{900}{}^{th}$ of span
- maximum deflection of cantilevers supporting construction loads: $^{1}/_{300}{}^{th}$ of cantilever length.

3.7 INSTALL CONCRETE UNDERLAY
Do not lay until granular hardfill has been formed to a suitable surface to receive the underlay using minimum 25 mm sand blinding. Lay the underlay in true alignment, lapping 150 mm. Carefully scribe fit around all penetrations. Fully seal all laps and penetrations with adhesive tape to the underlay manufacturer's requirements. Refer to details for treatment of sheet at perimeter of concrete.

3.8 INSTALL SHEET DAMPPROOFING
Protect horizontal surfaces to be damp proofed with a 50 mm layer of 15 MPa site concrete. Ensure surfaces for dampproofing are free from voids, spalled areas, loose particles and sharp protrusions. Masonry joints struck flush. Apply primer, then install the rubberised bitumen membrane system, strictly in accordance with the dampproofing manufacturer's requirements. All work by applicators licensed by the dampproofing manufacturer. Protect vertical surfaces with polystyrene sheets glued to the membrane and taped over joints.

3.9 APPLY LIQUID MEMBRANE
Three coats of water-based bitumen emulsion applied in accordance with the membrane manufacturer's requirements. First coat at the rate of 0.20 litres/m^2, with the second and third coats each at the rate of 0.75 litres/m^2. Protect vertical surfaces with polystyrene sheets before backfilling.

3.10 INSTALL CELLULAR POLYSTYRENE INSULATION
Install EPS insulation system to manufacturer's requirements.

3.11 CONSTRUCTION JOINTS
To NZS 3109: clause, 5.6 Construction joints. Clean face of previously hardened concrete at construction joints.

Use surface retarders to provide a key at construction joints. Use in accordance with the manufacturer's stated requirements. Remove laitance, contamination and cracked or dislodged aggregate before placing the continuing shutters and forms. Keep joints clean and undamaged until placing concrete.

3.12 LOCATION OF CONSTRUCTION JOINTS
Unless otherwise shown on the drawings locate the joints at positions listed in SELECTIONS.

3.13 JOINTS IN FORMS
Construct joints to prevent loss of grout between joints in form linings, as well as between forms and completed work. Column forms to have full height linings so that no horizontal joints occur on exposed faces.

3.14 COLD / HOT CONDITIONS
To NZS 3109: clause 7.2, Unfavourable conditions.

Application

3.15 FABRICATION
Fabricate formwork and falsework in a manner permitting its easy removal without damage to the concrete. Provide positive means of adjustment to ensure the formwork is secured in its correct position.

Provide a 20 mm x 20 mm chamfer to all corners unless detailed or noted otherwise. Protect corners from damage during and after stripping.

3.16 SECURELY FIX
Securely fix and brace to ensure sufficient strength and rigidity to support in safety all loads arising during construction and to maintain the specified dimensional tolerances.

3.17 WORK BELOW GROUND
Provide formwork to vertical faces below ground level.

3.18 WORK BELOW GROUND WITHOUT FORMWORK
Faces may be cast against earth without formwork only if adequate measures are taken to prevent contamination of concrete.

3.19 FORM TIES
Use proprietary form ties and spreaders. Wire ties are not permitted.

3.20 CHASES, HOLES, NIBS, REBATES AND REVEALS
Form chases, fillets, holes upstands and nibs as shown on the drawings. Position accurately at time of casting concrete.

3.21 CAST IN ITEMS, NON STRUCTURAL
Securely fix non-structural cast in items shown on drawings.

3.22 CAST IN ITEMS, STRUCTURAL STEEL
Securely fix structural steel cast in items and hold down bolts shown on drawings. Position accurately at time of casting concrete.

3.23 TRAPS AND WASHOUT PORTS
To NZS 3109: clause 7.3, Preparation for concreting.

Finishing

3.24 RELEASE AGENTS
Use the same type and brand throughout the entire area of any one finish. Apply evenly to form faces using the minimum amount necessary to obtain a clean release. Do not allow the release agent to come in contact with reinforcement, hardened concrete or other materials not part of the form face. Ensure compatibility with subsequent finishes being applied to the concrete.

Thoroughly clean any reinforcement coming in contact with release agent to remove all traces of release agent.

Completion

3.25 STRIKING FORMWORK
Ensure the safe removal of all or any part of the formwork. Remove formwork without shock or vibration or damage to the concrete and in such a manner as to take the imposed stresses gradually to NZS 3109: clause 5.4, Removal of forms and shores. Stripping times to NZS 3109: table 5.3, Minimum formwork stripping times – in situ concrete.

3.26 PARTIAL STRIKING
If this is required, retain supports undisturbed as follows:
- to soffit or beams where side form are struck
- to slabs where soffit forms are struck.

4.7 LOCATION OF CONSTRUCTION JOINTS
Where construction joints are not shown on the drawings, locate as follows:

	maximum area:	maximum length
Slabs on ground:	200 m^2	20 metres
Suspended slabs:	400 m^2	40 metres

	maximum length:	maximum lift
Beams:	25 metres	
Walls:	10 metres	4 metres
Columns:		3 metres

3112 REINFORCEMENT FOR CONCRETE

1. GENERAL

This section deals with the supply, cutting, bending and fixing of steel bar and steel welded reinforcement for concrete.

Related work

1.1 RELATED SECTIONS
Refer to 3100 CONCRETE GENERAL for general matters
Refer to 3111 FORMWORK FOR CONCRETE for formwork
Refer to 3121 CONCRETE PLACEMENT for concrete placing
Refer to 3124 FINISHES TO WET CONCRETE for concrete finishing
Refer to 3129 CONCRETE PRODUCTION for concrete production

Requirements

1.2 SELECTIONS AND DIAGRAMS
Provide schedules and diagrams of bars and bar bending.

2. PRODUCTS

Materials

2.1 GRADE 300E STEEL
To AS/NZS 4671. Round bars are shown by symbol "R" and deformed bars by symbol "D", followed by the diameter in millimetres.

2.2 GRADE 500E STEEL
To AS/NZS 4671. Round bars shown by symbol "HR" and deformed bars by symbol "HD" followed by diameter in millimetres.

2.3 WELDED WIRE FABRIC
Hard drawn steel wire spot welded to AS/NZS 4671, smooth or deformed and to the spacings and dimensions either specified or shown on the drawings.

2.4 TYING WIRE
Mild drawn steel wire not less than 1.2 mm diameter.

Components

2.5 SPACERS AND CHAIRS
Precast concrete or purpose made moulded PVC to approval. Where concrete spacer blocks are used in exposed concrete work use blocks matching surrounding concrete.

3. EXECUTION

Conditions

3.1 HANDLE AND STORE
Handle and store all reinforcing steel and accessories without damage or contamination. Store on timber fillets on hard ground in a secure area clear of any building operation. Lay steel fabric flat.

3.2 DELIVER ALL BUNDLES
Deliver all bundles of steel to the site clearly marked or tagged with numbers relating them to the bending schedule and drawings.

3.3 CLEANLINESS
Keep reinforcement clean so that at the time of placing concrete it is free of all loose mill scale, loose rust and any other contamination that may reduce bonding capacity.

3.4 PROJECTING REINFORCEMENT
Protect projecting reinforcement from the weather where rust staining of exposed concrete surfaces may occur.

Protect and/or mark any projecting reinforcement where it provides a potential hazard to site personnel.

Assembly

3.5 CUT AND BEND
Cut and bend bars using proper bending tools to avoid notching and to the requirements of NZS 3109: 3.3 Hooks and bends. Minimum radii of reinforcement bends to NZS 3109: table 3.1, Minimum radii of reinforcement bends. Do not rebend bars. Where rebending is necessary, use a purpose built tool, proper preparation and preheating.

3.6 ADJUSTMENTS
Use a purpose built tool for on site bending and to deal with minor adjustments to steel reinforcement.

3.7 TOLERANCES, BENDING
To NZS 3109: clause, 3.9 Tolerances for reinforcement.

Application

3.8 SECURE REINFORCEMENT
Secure reinforcement adequately with tying wire and place accurately, supported adequately and secured against displacement when concreting. Bend tying wire back well clear of the formwork.

3.9 SPACING
Spacing as dimensioned on the drawings but if not shown then the clear distance between parallel bars in a layer, or the distance between layers, or the spacing of other steel to the minimums laid down in NZS 3109: clause 3.6, Spacing of reinforcement.

3.10 TOLERANCES, SPACING
To NZS 3109: clause 3.9, Tolerances for reinforcement.

3.15 MINIMUM COVER
Unless noted otherwise on the drawings, minimum cover to all reinforcing bars, stirrups, ties and spirals to NZS 3109: clause 3.8, Cover.

3.16 TOLERANCES, COVER
Tolerances on cover relative to the values in NZS 3109: clause 3.9 Tolerances for reinforcement.

3.17 FIX CHAIRS
Fix chairs for top reinforcement in slabs at 1.0 metre centres or to ensure adequate support.

Completion

3.19 REMOVE
Remove all debris, unused materials and elements from the site.

4. SELECTIONS

4.1 REINFORCEMENT LAPS
Where reinforcement laps are not shown on the drawings, lap as follows:

Bar Diameter	Grade 300E deformed	Grade 500E deformed
10 mm	400 mm	650 mm
12 mm	500 mm	750 mm
16 mm	650 mm	1000 mm

3821L LASERFRAME™ TIMBER FRAMING

1. GENERAL

This section deals with the supply and erection of Carter Holt Harvey Timber Laserframe™, kiln-dried, machine graded timber framing, as a framed structure, or as part of a partitioning system.

Documents

1.2 DOCUMENTS REFERRED TO

Documents referred to in this section are:

AS/NZS 1491	Finger jointed structural timber
AS/NZS 1748	Mechanically stress-graded timber
NZS 3603	Timber structures standard
NZS 3604	Timber framed buildings
OSH	Guidelines for the provision of facilities and general safety in the construction industry.

BRANZ Bulletin 453 Selection and use of fasteners.

Documents listed above and cited in the clauses that follow are part of this specification. However, this specification takes precedence in the event of it being at variance with the cited document.

1.3 MANUFACTURER'S DOCUMENTS

Manufacturer's and supplier's documents relating to work in this section are:

Laserframe™ product information:

Laserframe™ Product Information Sheet

Laserframe™ Design Guide

Copies of the above literature are available at

Web: www.laserframe.co.nz

Telephone: 0800 74 63 99.

1.4 NO SUBSTITUTIONS

Substitutions are not permitted to any specified system, or associated components and products.

2. PRODUCTS

Materials

2.1 STRUCTURAL TIMBERS, CHEMICAL FREE

Laserframe™ kiln dried, machine stress graded to AS/NZS 1748, radiata pine with an average moisture content at supply of 16% or less. Finger jointed **Laserframe**™ structural timber manufactured to AS/NZS 1491 may be used as an option, with finger jointed **Laserframe**™ limited to wall studs and plates.

2.2 STRUCTURAL TIMBERS, TREATED

Laserframe™ kiln dried, machine stress graded to AS/NZS 1748, radiata pine with an average moisture content at supply of 16% or less.

Components

2.5 NAILS

Steel, stainless steel and galvanized steel of pattern to suit the location and to BRANZ Bulletin 453.

Type to NZS 3604: section 4, Durability, and of the size and number for each particular types of joint as laid down in the nailing schedules of NZS 3604: section 6, Foundations, section 7 Floors, section 8, Walls, section 9, Posts and section 10, Roof framing. Except that when hand driving nails into **Laserframe**™ the nail lengths and diameters should be generally as for power driven nails.

2.6 BOLTS AND SCREWS
Of engineering and/or coach type complete with washers, to the requirements of NZS 3604, section 4: Durability, and of the number and form required for each particular junction to NZS 3604: section 6, Foundation, section 7, Floors, section 8, Walls, section 9, Posts and section 10, Roof framing.

2.8 TIMBER CONNECTORS AND FIXINGS
Supply for each particular joint the connectors and fixings as noted on the drawings. Comply with the requirements of NZS 3604, section 4: Durability, and of the number and form required for each particular junction to NZS 3604: section 6, Foundations, section 7, Floors, section 8, Walls, section 9, Posts and section 10, Roof framing.

2.9 BRACING STRAPS
Nail-on type to the requirements of NZS 3604, section 4: Durability, and of the number and form required for each particular application to NZS 3604, section 6, Foundations, section 7, Floors, section 8, Walls, section 9, Posts and section 10, Roof framing.

3. EXECUTION

Conditions

3.1 PROTECT TIMBER
Keep **Laser*frame***™ dry and wrapped prior to erection. Protect against damage and from inclement weather and ensure that any variation in moisture content is kept to a minimum, before and after erection and before enclosure.

3.3 EXECUTION
To NZS 3604 and stud design tables, except as varied in this specification. Execution to include those methods, practices and processes contained in the unit standards for the National Certificate in Carpentry and the National Certificate in Joinery (cabinetry, exterior joinery, stairs).

3.4 SEPARATION
Separate all timber framing timbers from concrete by: -
- a full length bituminous damp-proof membrane overlapping timber by at least 6 mm; or
- a 12 mm minimum free draining air space

3.5 MOISTURE CONTENT
Maximum allowable equilibrium moisture content (EMC) in accordance with NZS 3602, table 4 for framing supporting interior linings:
- At lining: 16%

3.7 DIMENSIONS
All timber sizes except for battens are actual minimum dried sizes.

Application

3.8 SET-OUT
Set-out framing generally in accordance with the requirements of NZS 3604, to carry superimposed loads and as required to support sheet linings and claddings. Set back nogs 12.5 mm from face of studs where required for back-blocking of plasterboard non-tapered ends or edges.

3.9 SET TIMBERS
Set timbers true to the required lines and levels with all mitres, butt joints, laps and housings cut accurately to provide full and even contact over the whole of the bearing surface.

3.10 TIMBER CUTTING
Select and cut spanning members to minimise allowable defects and avoiding knots and short grain on edges in the middle third, and shakes, splits and checks at mid-span and

close to ends. Refer to the recommendations appropriate for the treatment type (if any) for the field application of timber preservatives to cut ends.

3.11 HOLES AND NOTCHES
Limit holes and notches, checks and half-housing for the structure to those allowable in NZS 3604. Neatly form holes and notches for services without lessening the structural integrity of the member.

3.12 CUTTING
Cutting for straightening to comply with NZS 3604.

3.13 EXPOSED TIMBER CONNECTORS AND FIXINGS
Do not use on any structural framing exposed to view unless detailed on the drawings.

3.14 POWDER ACTUATED AND MECHANICALLY POWERED FIXING
Comply with the OSH: Guidelines for the provision of facilities and general safety in the construction industry, part 5, section 5.7.

3.15 ADDITIONAL FRAMING
Position and fix all necessary members for the fixing of all services, fittings, fixtures, edges of linings or claddings, and to provide lateral support to load carrying framing.

3.16 FORM NAILED JOINTS
Fully drive nails in all structural joints with the number and location for each joint to the requirements of NZS 3604. Except that 75 mm x 3.15 mm nails may be used in 35 mm timber joints in wall frames and 90 mm x 3.15 mm nails may be used in 45 mm timber joints in wall frames. 100 mm x 3.75 mm nails should not be used without pre-drilling to 80% of nail diameter.

3.18 FIT CONNECTORS AND FIXINGS
Fit connectors and fixings to obtain full bearing over all contact surfaces and full development of the required loading capacity for that particular joint.

3.19 FIT BRACING
Fit and fix wall and roof bracing elements to the requirements of NZS 3604 and to develop the full number of bracing units required.

3.20 DPC TO LOSP TREATED TIMBER
Lay polyethylene DPC under LOSP treated bottom plate of all external timber framed walls on concrete, in a single layer with 50 mm overlaps at joints to provide a waterproof barrier.

3.21 DPC TO TIMBER
Lay bituminous DPC under the bottom plate of all external timber framed walls on concrete, in a single layer with 50 mm overlaps at joints to provide a waterproof barrier.

Completion

3.22 CLEAN UP
Clean up timber framing as the work proceeds so no offcuts, chips, sawdust or any other matter or items remain behind the claddings or linings.

3.23 LEAVE
Leave work to the standard required by following procedures.

3.24 REMOVE
Remove debris, unused materials and elements from the site.

4. SELECTIONS

4.3 EXTERIOR WALL FRAMING

Member	Type	Grade	Treatment
Exterior walls:	Laserframe	MSG8	None / H3.1

	Wall battens:	Radiata pine	Framing – No1 or Merchantable	bottom plate H3.1

4.4 ROOF FRAMING

Member	Type	Grade	Treatment
Trusses:	Laserframe	~	None / H3.1 to gable trusses
Battens:	Laserframe	MSG8	None
	Laserframe	MSG8	H1.2
Ceiling joists:	Laserframe	MSG8	None
Valley boards:	Radiata pine	No.1 Framing or Merchantable	H3.1

4.6 INTERIOR FRAMING

Member	Type	Grade	Treatment
Non structural walls:	Laserframe	MSG8	None / H3.1 bottom plate
Structural and braced walls:	Laserframe	MSG8	None None / H3.1 bottom plate

4161T THERMAKRAFT WRAPS, UNDERLAYS AND DPC

1. GENERAL

This section relates to the application of Thermakraft Industries (NZ) Ltd DPC, underfloor foil insulation, wall wraps and roofing underlays.

Related work

1.1 RELATED SECTIONS

Refer to ~ for ~

Documents

1.2 DOCUMENTS REFERRED TO

Documents referred to in this section are:

NZBC	E2/AS1 External moisture
AS 1530	Methods for fire tests on building materials, components and structures
NZS 2295	Pliable, permeable building underlays
AS/NZS 2904	Damp-proof courses and flashings
NZS 3604	Timber framed buildings
NZS 4200	Pliable building membranes and underlays
AS/NZS 4347	Damp-proof courses and flashings – Methods of test
AS/NZS 4389	Safety mesh
AS/NZS 4534	Zinc and zinc/aluminium-alloy coatings on steel wire
BRANZ	Appraisal Certificate No. 356 **Thermakraft Cover-up** breather-type building membrane
BRANZ	Appraisal Certificate No. 329 **Thermakraft Supercourse 500** damp-proof course and concealed flashing
BRANZ	Appraisal Certificate No. 560 Thermakraft MirraBlack damp proof course
BRANZ	Appraisal Certificate No. 549 **Thermakraft Diflex 130** Building Wrap
BEAL	Appraisal C403 **Thermakraft Aluband** window sealing tape and **Aluband** corner moulded piece system
NZMRM	NZ Metal Roof and Wall Cladding – Code of Practice

Documents listed above and cited in the clauses that follow are part of this specification. However this specification takes precedence in the event of it being at variance with the cited document.

1.3 MANUFACTURER'S DOCUMENTS

Thermakraft documents relating to work in this section are:

Thermakraft product manual and technical data sheets.

Copies of the above literature are available from:

Web:	www.thermakraft.co.nz
Telephone:	0800 806 595

1.4 MANUFACTURERS WARRANTY

Warrant this work under normal environmental and use conditions against failure of materials and execution. Thermakraft Industries Ltd warrant their wall wraps and roofing underlays to meet the durability of the cladding up to 50 years.

1.5 ABBREVIATIONS

The following abbreviations are used in this specification.

BEAL	Building Elements Assessment Laboratory.
NZMRM	New Zealand Metal Roofing Manufacturers Inc.
NASH	National Association of Steel Framed Buildings

1.6 INTERPRETATION

Wall underlay used in this specification has the same meaning as building wraps in NZS 3604 and NZBC E2/AS1.

Requirements

1.7 NO SUBSTITUTIONS
Substitutions are not permitted to any specified materials, or associated products, components or accessories.

1.8 INSTALLATION SKILL LEVELS
Installers to be experienced in the installation of **Thermakraft** products and familiar with **Thermakraft** Industries technical literature and the NZMRM NZ Metal Roof and Wall Cladding – Code of Practice.

2. PRODUCTS

Materials

DPC

2.1 EMBOSSED POLYETHYLENE
Supercourse 500 hi-impact polyethylene film to AS/NZS2904 and embossed on both sides. Thickness 500 microns minimum, manufactured for use as a damp-proof course and concealed flashings to doors and windows and complying with BRANZ Appraisal Certificate No. 329.

Wall wraps / underlay

2.6 POLYETHYLENE BREATHER TYPE MEMBRANE
Thermakraft Cover-Up high tensile coated polyolefin woven into sheet form with micro sized pores that allow the membrane to breathe with a fire retardant flammability index of 1, tested to AS 1530. To comply with BRANZ appraisal certificate No. 356.

Roofing underlay

2.16 BITUMINOUS SELF-SUPPORTING ROOFING UNDERLAY
Thermakraft 215 bituminous self-supporting roofing underlay tested to NZS 2295.

Accessories

2.28 WINDOW DOOR SEALING SYSTEM
Thermakraft Aluband system consists of aluminium faced bituminous window sealing tape, **Thermakraft Aluband** corner moulded polyethylene (PE) piece, used in conjunction with the **Thermakraft Aluband** hand tool to ensure proper adhesion and a tight fit into corners. See **Thermakraft** Data Sheet 312 for installation details and BEAL Appraisal C403.

2.29 STUD STRAPS
Thermastrap 201 & 203 19 mm wide polyethylene straps or **Thermakraft** Stud Strap in hand held dispenser with 25 mm wide polyethylene strap.

2.30 WIRE NETTING
75 mm galvanized hexagonal wire netting to AS/NZS 4534.

2.32 GUTTER AND UNDER FLASHINGS
Thermakraft 215 bituminous breather type building paper cut to width by manufacturer for use under valley, apron flashing and internal gutters.

Soffit liner cut to width from **Thermakraft 210** bituminous breather type building paper. Refer to SELECTIONS.

2.33 TAPE
Thermakraft tapes to compliment the underlay. Pressure sensitive aluminium foil tapes for joining foil insulation and vapour barriers.

3. EXECUTION

Conditions

3.1 GENERAL REQUIREMENTS
To NZS 3604 Section 11 Table 11.1 Underlays; and NZBC E2/AS1 Table 23 Properties of Roof Underlays and Building Wraps; and **Thermakraft** Industries technical literature.

3.2 STORAGE
Store building underlays and accessory materials, under conditions that ensure no deterioration or damage. Store rolls in an upright position on a smooth floor and protected from sunlight, UV radiation and moisture.

3.3 INSPECTION
Before starting work, check that the framing will allow work of the required standard. Carry out remedial work identified before laying underlay.

Application DPC

3.4 DPC TO LOSP TREATED TIMBER
Lay Supercourse 500 / MirraBlack DPC under LOSP treated bottom plate of all timber framed walls on concrete, in a single layer with 50 mm overlaps at joints to provide a waterproof barrier.

3.5 DPC TO TIMBER
Lay DPC under the bottom plate of all timber framed walls on concrete, in a single layer with 50 mm overlaps at joints to provide a waterproof barrier.

Application – Wraps / wall underlay

3.8 WALL UNDERLAY
Fix horizontally to outside face of framing in true alignment, with succeeding sheets overlapping 150 mm. Fix to **Thermakraft** Industries requirements. Scribe neatly around penetrations and openings to leave no gaps. Tape all penetrations. Keep clean, undamaged and without visible weather deterioration until closed in.

Application - Roofing underlay

3.9 WIRE NETTING
Lay 75 mm galvanized wire netting at right angles across the purlins and drawn taunt before fixing. Tie edges of netting together with galvanized wire clips.

3.11 BUILDING PAPER ROOF UNDERLAY
Lay vertically over purlins on wire netting with a 150 mm side lap. Fix securely to purlins with galvanized fixing clips. Lay underlay to avoid excessive dishing between purlins. When used vertically limit individual runs to 10 metres for bituminous based papers and 7 metres for fire retardant underlays.

Lay horizontally across the rafter/trusses starting at the gutter line with succeeding sheets in true alignment and lapping 150 mm. Scribe around and fit neatly to all penetrations. Avoid prolong exposure by installing the roof immediately.

3.12 GUTTER AND UNDER FLASHINGS
Lay **Thermakraft 215** bituminous breather type building paper cut to width by manufacturer for use as an underlay to valley, apron flashings, and internal gutters. Lap under flashings with adjoining underlays. Fix **Thermakraft 210** bituminous breather type building paper soffit liner from top plate down 150 mm past ribbon plate.

Completion

3.17 CLEAN UP
Clean up as the work proceeds.

3.18 LEAVE
Leave work to the standard required by following procedures.

3.19 REMOVE
Remove debris, unused materials and elements from the site.

4. SELECTIONS

4.1 DPC
Type: **Supercourse 500**

4.3 WALL WRAPS / UNDERLAYS – ABSORBENT CLADDING
Type: **Thermakraft Cover-Up** polyethylene fire retardant breather type membrane

4.5 ROOFING UNDERLAYS
Type: **Thermakraft 215** bituminous self-supporting breather type building paper

Accessories

4.7 WINDOW/DOOR SEALING SYSTEM
Type: **Thermakraft Aluband** Window Sealing System (comprising of Aluband Corner Moulded Piece and Aluband Window Sealing Tape).

4.8 STUD STRAPS
Type: **Thermastrap** 19 mm blue polypropylene tape

4.9 WIRE NETTING
Type: 75 mm galvanized wire netting

4261 BRICK VENEER CLADDING

1. GENERAL

This section relates to clay brickwork as a veneer cladding.

Related work

1.1 RELATED SECTIONS
Refer to ~ for ~.

Documents

1.2 DOCUMENTS REFERRED TO
Documents referred to in this section are:

NZBC B1/AS1	Structure - General, 2.0 Masonry
NZBC B1/AS3	Structure - Small chimneys
AS/NZS 1170.2	Structural design actions - Wind actions
NZS 1170.5	Structural design actions - Earthquake actions – New Zealand
AS/NZS 2699.1	Built-in components for masonry construction - Wall ties
AS/NZS 2699.3	Built-in components for masonry construction - Lintels and shelf angles (durability requirements)
AS/NZS 2918	Domestic solid fuel burning appliances - Installation
NZS 3103	Sands for mortars and plasters
NZS 3604	Timber framed buildings
NZS 4203	General structural design and design loadings for buildings
NZS 4210	Masonry construction: materials and workmanship
AS/NZS 4455	Masonry units and segmental pavers
BRANZ	Bulletin 436 Masonry veneer construction

Documents listed above and cited in the clauses that follow are part of this specification. However, this specification takes precedence in the event of it being at variance with the cited document.

Requirements

1.4 QUALIFICATIONS
Construction of all brickwork by persons competent and experienced in this work.

Performance

1.5 FIXINGS, WIND
Design and use the fixings appropriate for the wind zone (R) and topographical classification (T) of this site and building height; as required by NZS 3604 and the wind loads on various wall areas as given by NZS 4203 or AS/NZS 1170.2.

1.6 FIXINGS, EARTHQUAKE
Use fixings and methods capable of sustaining the loads appropriate to the area as set out in NZS 3604 and NZS 4210 and as required by NZS 4203 or NZS 1170.5.

1.7 COMPLIANCE
Brickwork to comply with NZBC B1/AS1 Structure - General, 2.0 Masonry.

2. PRODUCTS

Materials

2.1 CLAY BRICKS
To AS/NZS 4455.

2.2 LINTELS
To AS/NZS 2699.3.

2.3 VERMIN STOP
Galvanized hexagon 10 mm mesh of 1 mm diameter steel wire 100 mm wide, complete with galvanized steel staples.

2.4 DAMP-PROOF MEMBRANE
Heavy kraft, strip laminates saturated and coated with bitumen, butyl rubber sheet with adhesive, or equivalent.

2.6 DAMP-PROOF COURSE
Polyethylene based strip used as a damp-proof course and flashing, also for slip joints between brick courses.

Components

2.7 METAL TIES
To AS/NZS 2699.1. Veneer ties shall be fixed to framing members with screws or other non-impact fasteners.

2.8 JOINT REINFORCEMENT
Galvanized mild steel bonding with an ultimate tensile strength not less than 5300 kN.

Accessories

2.9 SAND FOR MORTAR
To NZS 3103. Chloride levels to not exceed 0.04% by dry weight of sand.

2.10 MORTAR
Composed of Portland cement, sand and water with an admixture to the provisions of NZS 4210: 2.2 Mortar. Obtain written approval of admixture being used. Also obtain written approval if intending to use hydrated lime in the mortar.

2.11 COLOURING PIGMENTS
Provide coloured mortar sample for approval and hold on site to match as pointing proceeds.

2.12 ADMIXTURES
To NZS 4210.

Finishes

2.15 BITUMEN DAMP-PROOF MEMBRANE
Water based bitumen emulsion heavy duty sealer.

3. EXECUTION

Conditions

3.1 TOLERANCES
To NZS 4210, table 2.2 Maximum tolerances.

3.2 HANDLING AND STORAGE OF MATERIALS
To NZS 4210 for aggregates, cement, bricks and reinforcement.

3.3 CONCRETE BASE
Check vertical and horizontal alignment. Any discrepancies exceeding the permitted tolerances shall be corrected before units are laid.

3.4 MEASURE MATERIALS
Measure materials for mortar accurately by weight or volume using suitably calibrated equipment.

3.5 WET WEATHER
Keep bricks dry at all times prior to laying. Protect the top row of uncompleted brick walls. Protect freshly laid brickwork during interruption through rain and at completion of each day's work.

3.6 COLD WEATHER CONSTRUCTION
When air temperature is below 5°C take the precautions required by NZS 4210: 2.18 Cold weather construction.

3.7 HOT WEATHER CONSTRUCTION
When air temperature is above 25°C or there is a drying wind, or lower temperatures, take the precautions required by NZS 4210: 2.19 Hot weather construction.

3.8 KEEP FACE WORK CLEAN
Keep clean during erection and until completion of the contract works. Turn back scaffold boards at night and during heavy rain. Do not rub face work to remove stains.

Application

3.9 COLOUR MIXING
Check all bricks delivered to site for colour variation, prior to commencing work. Ensure bricks are thoroughly blended from several pallets to ensure an even colour spread throughout the work.

3.10 UNIFORMITY
Carry up work with no portion more than 1500 mm above another at any time, raking back between levels.

3.11 BONDING
Lay bricks to the required bonding in the various locations. Refer to SELECTIONS/drawings.

3.12 PROVIDE WEEPHOLES
Provide weepholes at the bottom of cavities and cells to NZS 3604, section 11.7.4 Cavities and as necessary to drain moisture to the outside air.

3.13 INSTALL VERMIN STOP
Fold and staple one edge of the mesh to the substrate and with the mesh sloping outwards, set the other edge half the thickness of the veneer or 50 mm, whichever is less, into the mortar joint.

3.14 FORM OPENINGS
Unless detailed otherwise form openings to typical details from BRANZ Bulletin 436.

3.15 INSTALL LINTELS
Fit angle lintels to openings, sized to NZS 3604, table 11.4 Veneer lintels and placed to NZS 3604, section 11.7.6 Openings.

3.16 CAVITY WIDTH
No cavity width less than 40 mm or more than 75 mm unless detailed otherwise.

3.17 CAVITY VENTILATION
Ventilate to outside air with top and bottom openings to the requirements of NZS 3604, section 11.7.4 Cavities. Seal cavity off from roof space.

3.19 TIE SPACING
Unreinforced veneers to NZS 4210: 2.9.7 Tie classification and spacing.

3.20 SEPARATION JOINTS
Provide for wall movements of veneer with control joints to NZS 4210: 2.10 Methods of controlling wall movements. Weatherproof as necessary.

3.21 ERECT
Erect the cavity walls with cavities of the widths detailed. Bond the two thicknesses of brickwork together using 185 mm x 105 mm box ties, with extra ties at reveals and openings and all ties laid to fall towards outer thickness. Keep the cavity clear by lifting screeds or other means. Leave openings at the base, clean out cavity at completion and after inspection brick up openings to match the surrounding work.

3.22 FORM REVEALS
Form lintels, jambs and sills as detailed complete with damp-proofing and all ready for following work.

3.23 CAVITY BRIDGES
Seal the two thicknesses of brickwork with galvanized drip formers where in situ concrete is being placed above.

3.24 JOINT REINFORCEMENT
Flush up brickwork with mortar to an even bed and lay reinforcement where shown on the drawings. Keep back 12 mm from the face of brickwork and complete the mortar joints to a normal thickness. Lap 200 mm minimum.

3.25 PLACE TIES
Place ties to: -
- NZS 4210: 2.9.5 Tie anchorage, cover and fixing; and
- NZS 4210: 2.9.6 Placing of ties
- NZS 4210: 2.9.7 Tie classification and spacing

At unsupported edges and at all openings through veneered walls or non-grouted cavity walls, wall ties to be provided:
At the top and bottom of the opening:
- Not more than 300 mm or 2 courses, whichever is the smaller

At the sides of the opening or at an unsupported edge:
- Not more than 300 mm
- Where the veneer wall continues above or is interrupted by a damp-proof course or waterproof membrane, wall ties shall be provided in each of the first two courses above the membrane.

3.26 FORM OPENINGS
Provide a flexible damp-proof course, extending 200 mm beyond ends of lintels and sloping to weepholes over all openings in cavity walls.

3.27 DAMP COURSE TO JAMBS
Provide a flexible damp-proof course to jambs of openings in cavity walls, fully lapped with horizontal damp-proof courses at head and sill.

3.28 DAMP COURSE TO SILLS
Provide a flexible damp-proof course under jointed sills, turned up at back and ends.

Completion

3.38 PROGRESSIVE CLEANING
Clean off all mortar and other contaminants from the face work immediately they occur.

3.39 EFFLORESCENCE, WATER CLEANING
To remove deposits, brush with a stiff-bristle broom and take away brushings from the locality. Remove remaining deposit with a damp sponge. Wash wall thoroughly with a plentiful supply of clean water. Repeat this process every 4 weeks from appearance through to the completion of the contract works.

3.40 REPLACE
Replace damaged, cracked or marked elements.

3.41 LEAVE
Leave work to the standard required by following procedures.

3.42 REMOVE
Remove all debris, unused materials and elements from the site.

4. SELECTIONS

4.1 CLAY BRICKS

Brand:	Midland
Pattern:	Running Bond
Type:	70 Series Latrobe
Size:	70 mm x 70 mm x230 mm

4284 EIFS CLADDING

1. GENERAL

This section relates to the supply and fixing of an exterior insulated wall cladding system based on polystyrene boards fixed to timber/metal framing on a drained cavity.

Building code compliance

1.2 DURABILITY

The work covered by this part of the specification has been designed and constructed to achieve a durability of 15 years.

1.3 ON GOING MAINTENANCE INSTRUCTIONS

Provide ongoing maintenance instructions required to meet the performance requirements of the NZBC.

Documents

1.4 DOCUMENTS REFERRED TO

Documents referred to in this section are:

AS/NZS 1170	Structural design actions, Part 2: Wind actions
AS 1366.3	Rigid cellular polystyrene - Moulded (RC/PS - M)
As 1366.4	Rigid cellular polystyrene - Extruded (RC/PS - E)
AS 3566	Self-drilling screws for the building and construction industries
NZS 3602	Timber and wood-based products for use in building
NZS 3604	Timber framed buildings
NZS 4203	General structural design and design loadings for buildings
NZBC E2/AS1	External moisture

Documents listed above and cited in the clauses that follow are part of this specification. However, this specification takes precedence in the event of it being at variance with the cited document.

1.6 ABBREVIATIONS

The following abbreviations are used in this specification

EIFS	Exterior insulation and finish systems
EPS	Expanded polystyrene

1.7 NO SUBSTITUTIONS

Substitutions are not permitted to any specified plaster render system.

1.8 QUALIFICATIONS

Use only applicators licensed by the selected systems manufacturer to apply the exterior wall cladding system.

Documentation

1.9 FINISH SAMPLE

Submit one 300 mm x 300 mm sample of the selected system of each finish texture and colour for review.

1.10 MAINTENANCE INSTRUCTIONS

Provide plaster manufacturer maintenance instructions before practical completion of the contract for issuing to the building owner.

1.11 HEALTH AND SAFETY

Refer to the requirements of the Health and Safety in Employment Act and OSH: Guidelines for the provision of facilities and general safety in the construction industry. If the elimination or isolation of potential hazards is not possible then minimise hazards in this work on site by using the proper equipment and techniques as required in the MPNZA Painters hazard handbook. Supply protective clothing and equipment. Inform employees and others on site of the hazards and put into place procedures for dealing

with emergencies. Obtain from plaster manufacturer the material safety data sheets for each product. Keep sheets on site and comply with the required safety procedures.

Warranties

1.12 WARRANTY
Warrant this system under normal environmental and use conditions against failure of materials and execution. The plaster system is warranted as follows:
Materials: 15 years from date of practical completion issued by the manufacturer.
Execution: 5 years from the date of practical completion issued by the licensed applicator.

Performance

1.13 PERFORMANCE
Accept responsibility for the structural and weather-tight performance of the exterior render application.

1.14 PROTECTION OF NEW PLASTER
Confirm the protection systems to be applied to fresh plaster coats. Plastering not to begin until systems are confirmed.

1.15 INSPECTIONS
Allow to inspect the whole of the work at each stage. Determine a programme for inspections including notification when each part and stage of the work is ready for inspection prior to the work commencing. Permit representatives from the manufacturers to inspect the work in progress and to take samples of their products from site.

1.16 PRODUCER STATEMENT
Provide the manufacturers producer statement compiled by the licensed applicator in the form as required by the Building Consent Authority.

1.17 FIXINGS, WIND
Design and use the fixings appropriate for the wind zone (R) and topographical classification (T) of this site and building height; as required by NZS 3604 and the wind loads on various wall areas as given by NZS 4203 or AS/NZS 1170.

2. PRODUCTS

Materials

2.1 BASE COAT PLASTER
Factory-mixed plaster coating containing Portland cement, sand, lime and other admixtures.

2.2 FINISHING PLASTER, POLYMER MODIFIED
Factory-mixed polymer modified cement based plaster.

2.3 FINISHING PLASTER, ACRYLIC COATING
Factory-mixed 100% acrylic plaster.

2.5 PAINT
100% acrylic latex compatible with cement based plaster and suitable for textured surfaces.

Components

2.6 FIXINGS, TIMBER FRAME
40 mm system: 90 mm x 4 mm hot dipped galvanized flat head nails with either a 22 mm or 40 mm diameter plastic washers.

2.8 EXTERIOR CAVITY TIMBER BATTENS
Radiata pine battens, minimum 20 mm thickness, width and height to match timber framing studs. To NZS 3602, table 1, reference 1D.10.

2.10 POLYSTYRENE SHEET FOR EIFS CLADDING
40 mm Thick polystyrene sheet: expanded polystyrene (EPS) to AS1366.3 class H

2.12 REINFORCING MESH
Akali-resistant fibreglass woven reinforcing mesh.

Accessories

2.13 FLASHINGS AND ACCESSORIES
Proprietary profiles made from rigid uPVC for head, sill, and jamb flashings, corner beads, Z flashings and horizontal and vertical control joint flashings for exterior applications.

2.14 EXTERIOR CAVITY BASE CLOSURE MOULDING
Cavity base closure moulding made from rigid uPVC, aluminium or stainless steel. Base closure to have 3.0 to 5.0 mm holes or slots to provide 1000 mm^2 ventilation per linear metre. Upstand to wall 75 mm minimum. Length and width to suit cavity and cladding.

2.15 SEALANTS
Paintable neutral cure silicone in accordance with the systems manufacturer's guide and set against backer rods where necessary.

2.16 ADHESIVE
Low solvent construction adhesive in accordance with the system manufacturer's requirements.

3. EXECUTION

Conditions

3.1 DELIVERY
Keep plaster products dry in transit. Take delivery of plaster products dry and undamaged. Reject all damaged materials.

3.2 STORAGE
Deliver all materials in original unopened packaging with labels intact. Provide dry storage on site, stack carefully, protect from mechanical damage. Keep bagged render off concrete surfaces.

3.3 PLASTERING CONDITIONS
Carry out plastering to manufacturer's specification under conditions which will not adversely affect the finished work.

3.4 PROTECT
Before application of plaster, apply masking film and tape to all joinery, pipes, roofs and all areas likely to be marked by the plaster. Use drop cloths and ground covers to keep the working areas clean. Clean off droppings onto finished work immediately.

3.5 SUBSTRATE
Do not commence work until openings and apertures have been cut, pipes, fixtures, fixing pads and plugs have been fixed and flashings and other preparations are complete. All defects in substrate must be rectified prior to application of plaster coatings. Ensure that backgrounds and adjoining surfaces are, after the preparation called for in this section, is of the required standard by the manufacturer.

3.6 FLASHING AND DETAILING
Comply with the manufacturer's penetration flashing guidelines. Carry out to the required standard of execution to ensure water does not penetrate.

3.7 CONFIRM LAYOUT
Before commencing work confirm the layout of expansion joints and other visual detailing of the finished work.

Application

3.8 PENETRATIONS
Confirm that exterior wall openings have been prepared ready for the installation of all window and door frames and other penetrations through the cladding. Required preparatory work includes the following:
- wall cladding underlay/building wrap to openings finished and dressed off with flexible flashing tape ready for the installation of window and door frames and other penetrations.
- installation of window and door joinery.
- installation of flashings (those required to be installed prior to installation of penetrating elements).
- where electrical cables pass through cladding, put into conduit to ensure that there is no direct contact with the polystyrene.

3.9 FLASHING AND ACCESSORIES
Fit flashings to jambs and sill on recessed joinery using the manufacturer's proprietary flashings. Reinforce external corners and bottom edges of polystyrene sheets with uPVC angles and channel extrusions. Fit joinery heads with a head flashing (if not protected by boxed eaves or other protection).

3.10 CAVITY BASE CLOSURE MOULDING
Fix to the bottom wall plate uPVC cavity base closure moulding.

3.12 TIMBER CAVITY BATTENS
Fix timber battens to studs to achieve a 20 mm minimum thickness drained cavity to NZBC E2/AS1: 9.0 Wall claddings. The battens are fixed by the cladding fixings which will penetrate the wall framing studs over the building wrap. Seal the top of the cavity. Horizontal cavity battens must be no longer than 100 mm and fixed at a 5° slope. Use cavity spacers where fixing is required between cavity battens. Fix additional battens to internal and external corners and around openings to the manufacturer's standard details.

3.13 POLYSTYRENE SHEETS FIXED TO CAVITY BATTENS
Butt-joint the polystyrene sheets over solid continuously timber support to all edges. Nail fix through the cavity battens into the wall framing to manufacturers details.

Finishing

3.15 BASE PLASTER AND MESH COAT
Apply base plaster coat 2 mm minimum. Embed fibreglass mesh into the wet plaster. Overlap each successive length by 30 mm minimum. Apply diagonal reinforcement strips at all corners of windows, doors and other exterior openings.

3.16 POLYMER MODIFIED FINISH
Apply the coating of the selected texture, to the systems manufacturer's recommended techniques and thicknesses.

3.17 ACRYLIC COATING FINISHES
Apply the coating of the selected texture, to the systems manufacturer's recommended techniques and thicknesses.

3.18 CURE FINISHES
Cure and protect from rapid drying in accordance with the system manufacturers requirements.

3.19 PAINT FINISH
As soon as the cement plaster finish is dry enough to accept it apply the paint system to the paint manufacturer's requirements.

Completion

3.20 CLEANING
Remove debris, unused materials and elements from the site relating to the plaster system application. Replace damaged, cracked or marked elements. Leave the whole of this work to the required standard.

3.21 FINAL INSPECTION
A final inspection by the systems manufacturer or the authorised applicator of the entire finished cladding to take place immediately after completion of the insulating wall cladding work and any defects or subsequent damage made good immediately.

4. SELECTIONS

4.1 EIFS CLADDING

Brand:	~
Thickness/grade:	40 mm

4.2 CAVITY BATTENS

Timber species:	~
Timber grade:	MSG8
Treatment:	H3.1

4311 PROFILED METAL ROOFING

1. GENERAL

This section relates to the supply and fixing of Steel and Tube Roofing Products' profiled metal roofing, complete with accessories.

Related work

1.1 RELATED SECTIONS

Refer to 4391S STEEL AND TUBE RAINWATER SYSTEMS for spouting and downpipes.

Documents

1.2 DOCUMENTS REFERRED TO

Documents referred to in this section are:

AS/NZS 4389	Safety mesh
AS/NZS 4534	Zinc and zinc/aluminium-alloy coatings on steel wire
NZMRM	NZ Metal roofing & wall cladding - Code of practice

Warranties

1.5 WARRANTY

Warrant this work under normal environmental and use conditions against failure.

Perforation:	15 years minimum
Coatings:	10 years minimum
Workmanship:	5 years
From:	Date of installation.

Performance

1.6 FIXINGS, WIND

Design and use the fixings appropriate for the wind zone and topographical classification of this site and building height. Allow for specific loadings at corners and the periphery of the roof, where localised pressure factors apply.

1.7 CO-ORDINATE

Co-ordinate to ensure substrate and preparatory work is complete and other work programmed in the order required for access and completion of the roof. Ensure that all necessary members are positioned so that flashings can be fastened at both edges through the roof profile or cladding to the primary structure.

1.8 PERFORMANCE

Install roofing material and associated flashings and accessories to form a weather tight and durable system.

2. PRODUCTS

Materials - roofing

2.2 FLASHINGS GENERALLY

Formable grade 0.55 BMT for galvanized, aluminium/zinc and pre-coated steel, and aluminium to the same standards as the profiled sheets, notched where across profile or provided with a soft edge

2.3 FLASHINGS BEHIND BUILDING ELEMENTS

Flashing material and gauge to meet NZBC 50 year durability requirements for flashings behind building elements that are difficult to access or replace. Refer to SELECTIONS for location and type.

HURUNUI DISTRICT COUNCIL
Plans and specifications APPROVED.
In accordance with the Building Act 2004, clause 49(1) and the associated Building Regulations.
Signed .....

Materials

2.4 SAFETY MESH
To AS/NZS 4389.

2.5 WIRE NETTING
Galvanized hexagonal 75 mm mesh from 1 mm diameter steel wire to AS/NZS 4534.

2.6 UNDERLAY
Breather type kraft paper

2.7 FOIL
Double-sided reinforced

Components

2.8 FASTENERS GENERALLY
Durability of all fasteners Class 4 minimum and not less than the roofing material being fixed. Fastener material to be compatible with the material being fastened.

2.9 FIXING CLIPS
Galvanized steel or aluminium/zinc to suit the material and profile of the rigid sheet and location as required by **Steel and Tube Roofing Products**. Fix to steel with 16 mm x 10 gauge galvanized wafer head self-drilling screws and to timber with 50 mm long x 4.5 mm galvanized spiral rolled flat head nails.

2.10 FIXING SCREWS
Screws appropriate to the roofing material and the supporting member, as recommended by **Steel and Tube Roofing Products**.

2.11 RIVETS
Sealed aluminium, minimum diameter 4 mm.

Accessories

2.12 SEALANT
Steel & Tube neutral curing silicone or MS polymer sealant used as directed.

2.13 CLOSURE STRIPS
Compressible, profiled, closed cell foam strips to fit the sheet profile.

2.14 LAP SEALING TAPE
Closed cell, 3 mm x 16 mm self adhesive Trimseal tape.

3. EXECUTION

Conditions

3.1 INSPECTION
Inspect the roof framing and supporting structure to ensure that it is complete and ready for roofing. Do not start work until all requirements are complete to the required standard.

3.2 STORAGE
Take delivery of and accept packs of roofing undamaged on delivery. Reject all damaged material. Store on a level firm base with packs well ventilated and completely protected from weather and damage. Do not allow moisture to build up between sheets. If sheet packs become wet, fillet or cross stack to allow air movement between sheets.

3.3 HANDLING
Avoid distortion and contact with damaging substances, including cement and swarf. Do not drag sheets across each other and other materials. Protect edges and surface finishes from damage. Use soft, flat soled shoes when fixing and for all other work on the roof.

3.4 SEPARATION
Isolate dissimilar materials (metal and non-metal) in close proximity as necessary by painting the surfaces or fitting separator strips. Place isolators between metals and treated timber or cement based materials. Do not use unpainted lead sheet or copper in contact with or allow water run-off onto galvanized or Zincalume® materials.

Application

3.5 SET-OUT
Set out the planned layout before fixing commences, to ensure true lines and the correct relationship to module, grid and roof features.

3.6 END LAPS
Install in continuous lengths without end laps. Where end laps are necessary, seal both ends of the lap with Trimseal lap sealing tape.

3.7 SAFETY MESH
Fix safety mesh over exposed roof areas to AS/NZS 4389 and the manufacturer's requirements.

3.8 WIRE NETTING
Fix wire netting where specified, drawn tight and nailed or screwed to purlins with edges butted and twitched together to form a complete net.

3.9 LAY ROOF UNDERLAY
Fit and lap roofing underlay/foil over the netting/mesh. Lay underlay/foil horizontally or vertically with a 150 mm side lap, oversailing the spouting and/or gutters by 10 mm.

3.10 FIX INSULATION
Run and fix insulation blanket as detailed and to the insulation manufacturer's requirements.

3.11 AVOID DAMAGE
Take care to avoid damaging pre-finished roofing both during fixing. Wear only soft-soled shoes on the finished surface. Restrict foot traffic over the roof to within 300 mm of purlins or with foot placement in the pan of the profile. Where this is not possible, walk across two adjacent ribs.

3.12 MARKING AND CUTTING PROFILED METAL ROOFING
Use ink pen, chalk line or coloured pencil for marking roof sheets prior to cutting. Do not use black lead pencil for marking aluminium/zinc-based products. Cut by shear only, using nibblers or hand snips. Remove all cutting and drilling debris from the roof as soon as possible, ensuring that it does not contaminate gutters or lower surfaces.

3.13 INSTALLING PROFILED METAL ROOFING
Install and fix in accordance with NZ Steel's Installers Guide. Use only screws as required by the roofing manufacturer. Fixings and accessories to be colour matched before installation.

3.16 FIXINGS
Refer to the roofing manufacturer's literature for fixing details, taking particular care in the higher wind uplift areas at ridges, edges and verges.

3.17 VALLEYS
Form valleys as detailed and required by **NZBC & manufacturer**, ensuring the valleys provide a weathertight and neat appearance.

3.18 INSTALL FLASHING
Fasten ridges and all roof flashings at both edges through to the primary structure at centres required by the roofing manufacturer, allowing for localised wind forces. Close flashings neatly at the ends to provide a weatherproof and vermin proof appearance.

3.19 FLASHING PENETRATIONS
Flash all penetrations through the roof. Fit pipe flashings with a proprietary collar flashing, with other penetrations flashed as detailed and to provide a weathertight installation. Ensure that flashings are set to avoid any ponding of water.

3.20 CHANGE OF PITCH
Provide a notched or soft-edged apron flashing where an upper roof discharges onto a lower roof of lesser pitch.

3.21 USE OF SEALANTS
Select and use sealants only as recommended by the roofing manufacturer. Apply sealant in two narrow beads transversely across flashing intersections, close to the two edges. Avoid exposing sealant on outside surfaces.

3.22 REMOVE FILINGS
Remove metal filings from roofing surfaces at least daily.

Completion

3.23 REMOVE
Remove trade rubbish and unused materials from the roof and surrounds daily during the work. Sweep down at the end of each day, and clean out spoutings, gutters and rainwater pipes on completion of the roof. Remove debris, unused materials and elements from the site.

3.24 REPLACE
Replace damaged or marked elements. Do not attempt to repair coatings by applying colour match paint to pre-finished surfaces.

3.25 LEAVE
Leave this work complete with all necessary flashings, undercloaks, valleys, ridges and hips all properly installed as the work proceeds so the finished roof is completely weathertight.

4. SELECTIONS

Roofing

4.1

Profile name:	Corrugate
Material:	Coloursteel
BMT:	0.4 mm

4391 RAINWATER SYSTEMS

1. GENERAL

This section deals with rainwater disposal systems including spouting and downpipes, in metal or PVC.

Documents

1.2 DOCUMENTS REFERRED TO

Documents referred to in this section are:

AS 1273	Unplasticised PVC (uPVC) downpipe and fittings for rainwater
NZMRM	NZ Metal roof and wall cladding - Code of practice

Documents listed above and cited in the clauses that follow are part of this specification. However this specification takes precedence in the event of it being at variance with the cited document.

1.4 ABBREVIATIONS

The following abbreviations are used throughout this part of the specification:

BMT	Base metal thickness
NZMRM	New Zealand Metal Roofing Manufacturers Inc

Requirements

1.5 QUALIFICATIONS

Work to be carried out by tradesmen experienced, competent and familiar with the materials and techniques specified.

Performance

1.6 TEST

Test the completed rainwater disposal system with water to ensure spoutings are laid to correct falls, that both spouting and downpipes are unobstructed and that no ponding occurs in spoutings.

2. PRODUCTS

Materials - metal

2.3 SPOUTING

Complete with matching brackets to suit spouting and screws. Refer to SELECTIONS for type.

2.4 DOWNPIPES

Complete with stand-off brackets, screw fixed. Refer to SELECTIONS for type.

Materials - fascia/barge system

2.6 EXTERNAL FASCIA/BARGE SPOUTING SYSTEM

Fascia/barge type complete with jointing, brackets, fittings and accessories, brand matched and complete to the manufacturer's requirements.

Components

2.11 DROPPERS

Steel or plastic droppers, sized to fit inside the downpipe.

2.12 SEALANT

MS Polymer sealant.

3. EXECUTION

Conditions

3.1 HANDLE AND STORE
Handle and store downpipes, spouting and accessories to avoid damage. Store on site under cover, on a clean level area, stacked to eliminate movement and away from work in progress. Avoid exposure to sunlight if strippable film is still on the product.

3.2 SUBSTRATE
Check that fascias, barges or cladding are level and true to line and face and will allow work of the required standard without distortion to the product alignment. Do not proceed until they are up to standard.

3.3 THERMAL MOVEMENT
Make adequate provision in the fixing and jointing of the spouting for thermal movement in the length of the spouting. Provide an expansion joint in spouting over 12 metres in length for steel gutter.

3.4 CORROSION
Separate metals subject to electrolytic action from each other and from treated timber, concrete and other lime substances by space, painting of surfaces, taping, or separator strips.

Application - metal

3.8 INSTALL PRE-PAINTED METAL SPOUTING
Establish minimum falls necessary (minimum 1:500, 2 mm in 1 metre) to outlets to prevent ponding and screw fix brackets true-to-line at 750 mm centres maximum for external gutters greater than 175 mm wide and at 600 mm centres maximum for gutters 175 mm to 300 mm wide. In areas where snow fall is possible the centres should be reduced to 600 mm maximum. Lap spouting joints a minimum of 40 mm and silicone seal and pop rivet to the manufacturer's recommendations. Cut out neatly for and fit the pre-formed downpipe dropper and silicone seal around the lap joint. All installation to NZMRM NZ Metal roof and wall cladding - Code of practice recommendations.

3.9 INSTALL EXTERNAL FASCIA/BARGE SPOUTING SYSTEM
Install concealed fascia brackets to rafters with either screws and nails and fit fascia to a level line. Fit gutter brackets to fall to outlet. Cut and form corner junctions and barge junctions and fit spouting rigidly to brackets. Cut out neatly for and fit pre-formed downpipe droppers. Silicone seal and pop-rivet all lap joints. All installation to NZMRM NZ Metal roof and wall cladding - Code of practice recommendations.

3.10 INSTALL METAL DOWNPIPES
Form downpipes complete with cast zinc 115 degree angle bends as needed with all joints lapped and silicone sealed. Galvanize screw fix with galvanized steel pipe clips to rigidly stand 25 mm off the wall plumb and discharging into stormwater gully or inlet pipe. All installation to NZMRM NZ Metal roof and wall cladding - Code of practice recommendations.

Application – general

3.14 INSTALLATION GENERALLY
Install to NZMRM NZ Metal roof and wall cladding - Code of practice recommendations where not otherwise specified.

3.15 INSTALL VALLEY GUTTERS
Attach valley gutters to valley boards by clips allowing for thermal movement to NZMRM NZ Metal roof and wall cladding - Code of practice, clause 8.4.5 Valley gutters. Separate valley gutter from valley boards with a layer of bituminous building paper.

Completion

3.22 REPLACE
Replace damaged or marked elements.

3.23 LEAVE

Leave the whole of this work discharging completely and freely into the stormwater system and free of all debris. Leave work to the standard required by following procedures.

3.24 REMOVE

Remove debris, unused materials and elements from the site.

4511 TIMBER DOORS

1. GENERAL

This section deals with the supply and installation of exterior timber doors and frames and doorsets.

Related work

1.1 RELATED SECTIONS

Refer to GLAZING for glazing
Refer to HARDWARE for door furniture.
Refer to INTERIOR TIMBER DOORS AND WINDOWS for interior doors and windows.

Documents

1.2 DOCUMENTS REFERRED TO

Documents referred to in this section are:

NZBC C/AS1	Appendix C: Test methods C8.1 Fire resisting closures and smoke stop doors
AS/NZS 1170.2	Structural design actions - Wind actions
NZS 1170.5	Structural design actions - Earthquake actions – New Zealand
AS/NZS 1905.1	Components for the protection of openings in fire-resistant walls - Fire-resistant doorsets
NZS 3602	Timber and wood-based products for use in building
NZS 3604	Timber framed buildings
NZS 3610	Specification for profiles of mouldings and joinery
NZS 4203	General structural design and design loadings for buildings
NZS 4211	Specification for performance of windows
NZS 4223.3	Glazing in buildings - Human impact safety requirements

Documents listed above and cited in the clauses that follow are part of this specification. However, this specification takes precedence in the event of it being at variance with the cited document.

Performance - windows, exterior doors and frames

1.5 PERFORMANCE

The structural and weather-tight performance of the completed window installation, the glazing and infill panels is the responsibility of the window manufacturer.

1.6 WIND

Construct windows, exterior doors and frames to withstand design wind pressures to NZS 3604 and NZS 4211.

1.7 WEATHERTIGHTNESS

Construct and glaze windows, exterior doors and frames to remain weathertight.

Materials - general

2.1 EXTERIOR TIMBER

Solid timber to NZS 3602 to profiles detailed. Moisture content 16% ex factory.

2.2 SASHES

Solid/finger jointed timber to profiles detailed and complete with weather-seals and weather hoods as necessary.

2.3 EXTERIOR FACINGS AND SCRIBERS

To NZS 3610, treated H3.1 unless durable heart wood, to profiles detailed/scheduled.

2.4 GLASS

Refer to GLAZING for glass type and thickness.

2.5 PANELS
Refer to SELECTIONS for type.

2.6 INTERIOR TIMBER
To NZS 3602. Moisture content 10-14%.

2.7 STANDARD DOORS
Frames to profile as detailed and dimensioned.

Materials - doorsets

2.8 STANDARD DOORSETS, SIDE HUNG DOOR
Frames to profile as detailed and dimensioned.

2.9 STANDARD DOORSETS, SLIDING
Frames to profile as detailed and dimensioned.

2.14 WINDOW AND DOOR FURNITURE
Refer to HARDWARE for type.

2.15 METAL FASTENINGS
Galvanized steel or non-corrodible metal.

2.16 SCREWS
Stainless steel or non-corrodible metal. Length sufficient to penetrate into the background support up to the shank. Screws for fixing hinges, hardware or furniture to match the item being attached.

2.17 NAILS
Length sufficient to penetrate into the background support at least half the nail length, except if into radiata pine then three-fifths their length.

2.18 SASH STAYS
Aluminium, nylon-bearing friction stays - 2 per sash. Size and gauge to suit sash size and weight.

2.19 HINGES
Size and gauge to carry door size and weight. Refer to SELECTIONS for type, size and material.

Finish

2.20 PRIMER
Alkyd wood primer coating system.

3. EXECUTION

Conditions

3.1 GENERALLY
Execution to include those methods, practices and processes contained in the unit standards for the National Certificate in Carpentry and the National Certificate in Joinery (cabinetry, exterior joinery, stairs).

3.2 DO NOT DELIVER
Do not deliver any elements which cannot be unloaded immediately into suitable storage conditions.

3.3 HANDLE
Handle, unload and store elements without distortion and avoiding pre-finished surfaces rubbing together, and contact with mud, moisture and other damaging materials.

3.4 PROTECT
Protect all elements against damage to arrises and glazing beads. Store frames and doors flat and away from moisture or direct sunlight.

3.5 FABRICATE DOORSETS
Fabricate doorsets in the factory with doors hung, provision for furniture made, finishes applied and fully operable.

3.6 FABRICATE DOORS
Fabricate doors in the factory, with provision for door furniture.

3.7 CHECK ALL OPENINGS
Check all openings on site for size and standard of execution before installing window or door frames. Installation tolerances of windows subject to earthquake design to comply with NZS 4203 or NZS 1170.

3.8 CONFIRM PREPARATION OF EXTERIOR WALL OPENINGS
Confirm that exterior wall openings have been prepared ready for the installation of all window and door frames. Do not proceed with the window and door installation until required preparatory work has been completed.

Required preparatory work includes the following:
- wall cladding underlay/building wrap to openings finished and dressed off ready for the installation of window and door frames
- claddings neatly finished off to all sides of openings
- interior linings neatly trimmed ready for installation of jamb liners and completion of air seals to all sides of openings
- installation of flashings (those which are required to be installed prior to frames).

Assembly

3.9 TOLERANCES
Construct windows to a dimensional accuracy to comply with NZS 4211, clause 8, Dimensional accuracy.

3.10 FABRICATION GENERALLY
Manufacture and fabricate frames, doors and sashes as detailed. Install hinges, stays and running gear as scheduled.

3.11 FABRICATION SASHES
Solid/finger-jointed timber to profiles detailed, complete with weather seals and weather hoods as necessary and as detailed.

3.12 HINGES
Fit hinges to doors to support the door size and weight

3 hinges	Doors up to 2.2 metres
4 hinges	Doors 2.2 – 2.6 metres
5 hinges	Doors 2.6 – 5.0 metres

Fit minimum 2 hinges per window sash

3.13 FACTORY FINISHING
Before delivery to site: -
- Prime assemblies scheduled for paint finish with an alkyd wood primer.
- Prime rebates and concealed faces of beads of assemblies scheduled for clear finish with an alkyd wood primer.
- Brace square and provide protection to assemblies during delivery to site. Where factory glazed, indicate the presence of transparent glasses with whiting, tape or signs compatible with the glass type.

3.14 ON SITE FINISHING
Before installation: -

- Prime assemblies scheduled for paint finish not already primed with an alkyd wood primer.
- Prime all rebates and concealed faces of beads of assemblies scheduled for clear finish with an alkyd wood primer.
- Re-prime/seal any subsequently cut edge.
- Refer to PAINTING for finishing.

Application - generally

3.15 FIXING FRAMES
Fit flashings to frame and framing as required. Fix and assemble frames rigidly in place, plumb, level and true to line and face without distortion and with all opening sashes fully and easily operating. Fit facings, scribers, draught-stopping and sealants.

3.16 DISTORTION
Do not distort frames when wedging or other packing, or when tightening fixings. If necessary adjust packing and fixings to eliminate binding. Do not cut, plane or sand frames to remedy distortion.

3.17 FIXINGS
Fix frames so that nail heads are covered by applied stops and beads. Punch all nail heads below timber surfaces which will be visible in completed work. Ensure that at least one frame fixing is adjacent to each hanging point.

3.18 EXTERNAL DOOR FRAMES AND SASHES
Profiles to NZS 3610 and fabrication as detailed; conforming with the performance requirements of NZS 4211. Jamb, head and sill liners as detailed. Wedge and rigidly fix in place without distortion, plumb, and true to line and face, complete with full length sill tray, jamb and cap flashings and with all doors and sashes operating freely. Fit hardware.

3.19 INSTALL FLASHINGS
Install flashings to heads, jambs and sills of frames as supplied and required by the window manufacturer and as detailed on the drawings. Finish head flashings to match window finish.

Place all flashings so that the head flashing weathers the jamb flashings, which in turn weathers over the upstand of the sill flashing. Ensure that sill flashings drain to the outside air.

Except where window/door frames are recessed, ensure that head flashings over-sail jamb facings by 15 mm at each end.

3.20 COMPLETE AIR SEAL
Form an air-tight seal by means of proprietary expanding foam, compressible foam strips, or sealants used with backing rods, applied deep within the reveal to completely fill the gap between joinery and structural framing. Ensure that in combination with the internal linings a complete air seal is created.

Application - doorsets

3.21 PROPRIETARY ELEMENTS
Fix in accordance with the door manufacturer's requirements.

3.22 INSTALLATION GENERALLY
Frames finished to match the width of lined walls. Wedge frames into opening and nail through into the studs. Locate all wedges and fixing at hinge positions and opposite, with one fixing in the vicinity of the lock. Fixings concealed behind planted stops.

Hang doors on hinges, sliding or bi-fold gear as specified and to operate freely. Fit all hardware and door furniture.

3.23 INSTALL STANDARD DOORSETS
Timber stud walls - timber frames: Wedge into opening and nail through into the studs. All wedges and fixing to be at hinge positions and opposite, with one fixing in the vicinity of the lock.

3.25 BOTTOM CLEARANCE
Provide for specified floor coverings plus 5 mm clearance at any point of swing. When floor covering is not specified, allow 25 mm total.

For ventilated and/or air conditioned spaces allow 20 mm clearance above finished floor coverings for supply/return air.

3.26 REMOVE DOORS
Remove doors from the frames if necessary to protect them, or for re-finishing, store safely and near completion refit them, all without any damage.

3.27 INSTALL PANELS
Prime rebates and beads, install sealant backing strips or silicone. Install dry beading to outside of panels as selected. Do not mitre corners of beads.

3.28 MANIFESTATIONS
To comply with NZS 4223, part 3, section 303.1, Manifestation (making glass visible).

3.29 INSTALL FURNITURE
Install latches, locks and door furniture as scheduled.

3.30 CHECK
Check and adjust operation of all doors, hardware and furniture.

Completion

3.31 PROTECTION
Protect all finishes against damage from adjacent and following work.

3.32 REPLACE
Replace damaged, cracked or marked elements.

3.33 TRADE CLEAN
Clean off or remove safety indicators at completion of the building.

3.34 LEAVE
Leave work to the standard required for following procedures.

3.35 REMOVE
Remove safety indicators and protective coverings, and wipe down all doorsets thoroughly to leave them perfectly clean. Remove all debris, unused materials and elements from the site.

4. SELECTIONS

4.1 WIND ZONE
Building wind zone: Medium (as determined from table 5.1 of NZS 3604)

4521 ALUMINIUM WINDOWS AND DOORS

1. GENERAL

This section relates to the manufacture, supply, and installation of aluminium windows, doors and frames, complete with door and window hardware and furniture.

Related work

1.1 RELATED SECTIONS

Refer to GLAZING for glazing

Documents

1.2 DOCUMENTS REFERRED TO

Documents referred to in this section are:

NZBC E2	External moisture
NZBC F4/AS1	Safety from falling
NZS 1170.5	Structural design actions – Earthquake actions – New Zealand
AS 1734	Aluminium and aluminium alloys - Flat sheet, coiled sheet and plate
AS/NZS 1866	Aluminium and aluminium alloys - Extruded rod, bar, solid and hollow shapes
NZS 3504	Aluminium windows
AS 3715	Metal finishing - Thermoset powder coatings for architectural applications
NZS 4203	General structural design and design loadings for buildings
NZS 4211	Performance of windows
NZS 4223.3	Code of practice for glazing in buildings - Human impact safety requirements
AS/NZS 4680	Hot-dip galvanized (zinc) coatings on fabricated ferrous articles
BS 3900	Methods of tests for paints, Part C5: Determination of film thickness
AAMA 2604	Performance requirements and test procedures for high performance organic coatings on aluminium extrusions and panels
ASTM A666	Austenitic stainless steel sheet, plate and flat bar for structural applications
US Federal Specification	
TT-S-001543A	Sealing compound, silicone rubber base (for caulking, sealing and glazing in buildings and other structures)
TT-S-00230C	Sealing compound, elastomeric type, single component (for caulking, sealing and glazing in buildings and other structures)
WANZ	Specification for powder coatings on architectural aluminium products
WANZ	Window installation system: An Alternative Solution for the installation of windows and doors

Documents listed above and cited in the clauses that follow are part of this specification. However, this specification takes precedence in the event of it being at variance with the cited document.

Requirements

1.4 SECTION SAMPLES

Submit for assessment before preparing shop drawings samples of full size sections, or half size drawings and details of all profiles offered.

1.5 ASSEMBLY SAMPLES

Submit for assessment before fabrication a complete assembly of members and components of windows, doors and frames.

1.6 HARDWARE SAMPLES

Submit for assessment samples or catalogue cuts and data sheets of all hardware, operating systems and security mechanisms before assembly commences. Provide examples of the proposed or specified hardware surface finish.

1.7 FINISH SAMPLES
Submit for assessment before fabrication, 3 samples of the specified finish to all exposed window and door sections, in the selected colour, including statements of the film thickness actually achieved on the samples. On acceptance these will be used as quality control samples.

1.8 PROTOTYPES
Allow to fabricate window prototypes from shop drawings and test in a laboratory accredited by International Accreditation of New Zealand to provide evidence that the windows offered comply with the requirements of NZS 4211 and the specified design wind pressure and air leakage level.

1.9 QUALIFICATIONS
Carry out fixing by the manufacturer or by a firm nominated and approved by the window manufacturer in writing.

1.10 NOMINATE COATING MANUFACTURER
Nominate brand (if offering an alternative), applicator's name and address of plant and submit for review. Applicator to be approved by the coating manufacturer in writing.

1.11 DESIGN OF SASHES
Hollow box section extrusions joined with staking angles at corners.

1.12 SASH DESIGN
Open section extrusions jointed by screw traces at corners.

1.13 GLAZING DESIGN
Ensure glass is capable of being reglazed without dismantling sashes.

1.14 GLAZING, EXTERNAL
All glazing beads external.

1.18 MAINTENANCE PROGRAMMES
Provide a maintenance programme in written and graphic form upon completion of the aluminium window and door installation.

Warranties

1.19 WARRANTY
Warrant this work under normal environmental and use conditions against failure of materials and execution
Warranty period: 5 years

Refer to the general section for the required form of WARRANTY AGREEMENT and details of when completed warranty must be submitted.

Performance

1.20 STANDARD OF PERFORMANCE
The windows, doors, their installation and all fixings to comply with NZS 3504 and NZS 4211.

1.21 RESPONSIBILITY FOR PERFORMANCE
Accept responsibility for the structural and weather-tight performance of the completed window and door installation, the glazing work and all spandrel and infill panel work.

1.22 CERTIFY COATINGS
Certify on request compliance with this specification and support with control and sampling records. Test for film thickness to BS 3900, part C5, method No. 4, using method (b) for certifying thickness and method (a) where any dispute arises as to the thickness provided.

1.23 CERTIFICATION
Provide evidence of a certificate by a laboratory accredited by International Accreditation of New Zealand that the windows and doors offered comply with the requirements of NZS 4211 and the specified design wind pressure and air leakage level.

1.24 IN SITU TOUCH-UP
In situ touch-up of polyester or fluoropolymer coated aluminium is only permitted after receiving written authority. Replace all damaged material.

2. PRODUCTS

Materials

2.1 WINDOWS
Refer to SELECTIONS for type and finish.

2.2 DOORS
Refer to SELECTIONS for type and finish.

2.3 ALUMINIUM EXTRUSIONS
Alloy designation to comply with AS/NZS 1866. Branded and extruded for anodising or powder coating.

2.4 ALUMINIUM SHEET AND STRIP
Complying with AS 1734 of suitable thickness. Rolled for anodising or powder coating.
Alloy designation: 5251 - H16 or 5005 - H16

2.5 STAINLESS STEEL SHEET AND STRIP
Type 316 austenitic steel, complying with ASTM A666: Austenitic stainless steel sheet, plate and flat bar for structural applications.
Finish grade: 2B (satin lustre)

2.6 FLASHINGS GENERALLY
Material, grade and colour of head flashings to match the window frames. Ensure that materials used for head, jamb and sill flashings are compatible with the window frame materials and fixings and cladding materials.

2.7 GLASS
Refer to GLAZING for type and thickness.

2.8 PANELS
Refer to SELECTIONS for type and finish.

Components – for cavity systems

2.10 WANZ CAVITY CLOSER
Flashing device to close the cavity above the window or door unit to direct water that occasionally penetrates the wall cladding to the exterior of the joinery unit

2.11 WANZ SUPPORT BAR
Extruded aluminium support bar with built in drainage and ventilation to NZBC E2, to provide continuous support to window unit over 1600mm in width.

2.12 WANZ SUPPORT ANGLE
Support angle for use with the sill pan for deeper claddings to transfer the weight of the window back to the frame.

Components

2.13 GLAZING GASKETS
Thermoplastic rubber. Do not stretch glazing gaskets during installation. Measure and cut gaskets 1% over length before installation to avoid stretching.

2.14 HARDWARE AND FURNITURE
Hinges, stays, catches, fasteners, latches, locks and furniture as offered by the window and door manufacturer. Refer to SELECTIONS for type and finish. Key alike all lockable window hardware able to be keyed alike.

2.15 SAFETY STAYS
Stainless steel non releasable restrictors to limit window opening to NZBC F4/AS1, Table 2, Acceptable opening sizes for barriers.

Accessories

2.16 POINTING SEALANT
Building sealant or approved equivalent with not less than a ± 40% movement factor complying with US Federal Specification TT-S-001543A.

2.17 STRUCTURAL SEALANT
Provide in structural sealant joints for movement of: ~

Follow recommendations of the structural sealant manufacturer. Use in conjunction with compatible silicone rubber spacers and gaskets or double-sided expanded cellular glazing tapes.

2.18 WEATHERING SEALANT
Building sealant used in accordance with manufacturer's instructions for weather sealing glass to glass joints complying with US Federal Specification TT-S-0011534A, or a one-part polyurethane medium modulus (± 25% movement) to US Federal Specification TT-S-00230C.

Finishes

2.20 EXTERNAL COATED ALUMINIUM
Polyester powder organic coating in accordance with WANZ Specification for powder coatings in architectural aluminium products and AS 3715.

3. EXECUTION

Conditions - generally

3.1 DO NOT
Do not deliver to site any elements which cannot be unloaded immediately into suitable conditions of storage.

3.2 UNLOAD
Unload, handle and store elements in accordance with the window manufacturer's requirements.

3.3 AVOID
Avoid distortion of elements during transit, storage and handling.

3.4 PREVENT
Prevent prefinished surfaces rubbing together, and contact with mud, plaster and cement. Keep paper and cardboard wrappings dry.

3.5 PROPRIETARY ELEMENTS
Fix in accordance with the window manufacturer's requirements.

3.6 PROTECTION
Retain protective coverings and coatings in place during and after installation.

3.7 ADDITIONAL PROTECTION
Supply and fix additional protection as necessary to prevent marking of surfaces which will be visible on completed work.

Conditions - fixings and fastenings

3.8 SUPPLY OF FIXINGS
Use only fixings and fastenings recommended by the manufacturer of the component being fixed and to comply with the design wind pressure stated in the STANDARD OF PERFORMANCE clause.

3.9 EXPOSED FIXINGS AND FASTENINGS
Ensure fixings and fastenings exposed to the weather are of *aluminium, or Type 316* stainless steel.

3.10 PROTECTED FIXINGS AND FASTENINGS
Fixings and fastenings not exposed to the weather may be hot dipped galvanized steel with a coating weight of 610 g/m² complying with AS/NZS 4680.

3.11 TIMBER LINERS
Before fixing to aluminium frames, ensure that timber liners which are being painted have been primed on all surfaces.

Assembly

3.12 FABRICATION
Fabricate frames as detailed on shop drawings. Install glazing, hinges, stays and running gear as scheduled. Provide temporary bracing and protection. Temporarily secure all opening elements for transportation.

3.13 HARDWARE GENERALLY
Factory fit all required and scheduled hardware. *Account for all keys and deliver* separately to the site manager.

3.14 SAFETY STAYS
Factory fit safety stays to all windows scheduled for safety stays and to all windows where safety stays are required to comply with NZBC F4/AS1 4.0, Opening windows.

Application

3.15 CORROSION PROTECTION
Before fixing, apply suitable barriers of bituminous coatings, stops or underlays between dissimilar metals in contact, or between aluminium in contact with concrete.

3.16 CONFIRM PREPARATION OF WALL OPENINGS
Confirm that wall openings have been prepared ready for the installation of all window and door frames. Do not proceed with the window and door installation until required preparatory work has been completed.

Required preparatory work includes the following:
- wall cladding underlay/building wrap to openings finished and dressed off ready for the installation of window and door frames
- claddings neatly finished off to all sides of openings
- interior linings neatly trimmed ready for installation of jamb liners and completion of air seals to all sides of openings
- installation of flashings (those which are required to be installed prior to frames).

3.17 INSTALLATION GENERALLY
Fix to comply with the reviewed shop drawings and installation details including flashings and bedding compounds, pointing sealants and weathering sealants.

3.19 INSTALLATION CAVITY CONSTRUCTION
Install to WANZ Installation System details and drawings including WANZ cavity closers, support bars and support angles

3.20 INSTALL FLASHINGS
Install flashings to heads, jambs and sills of frames as supplied and required by the window manufacturer and as detailed on the drawings. Finish head flashings to match window finish.

Place all flashings so that the head flashing weathers the jamb flashings, which in turn weathers over the upstand of the sill flashing. Ensure that sill flashings drain to the outside air.

Except where window/door frames are recessed, ensure that head flashings over-sail jamb facings by 15 mm at each end.

3.21 COMPLETE AIR SEAL
Form an air-tight seal by means of a proprietary expanding foam or sealants used with backing rods, applied between the window / door reveal and structural framing to a depth of between 10 and 20mm, to provide a continuous air tight seal to the perimeter of the window or door.

3.22 FIX HARDWARE
Fix all sash and door hardware and furniture as scheduled.

Application - jointing and sealing

3.23 SEAL FRAMES ON SITE
Seal frames to each other and to adjoining structure and finishes, all as required by the window manufacturer and to make the installation weathertight. Do not seal the junction between the sill member and the cladding or sill flashing which must remain open.

3.24 PREPARE
Ensure joints are dry. Remove loose material, dust and grease.

3.25 PREPARE JOINTS
Prepare joints in accordance with the sealant manufacturer's requirements, using required solvents and primers where necessary.

3.26 PREPARATION
Mask adjoining surfaces which would be difficult to clean if smeared with sealant.

3.27 BACKING
Insert polyethylene rod or tape back-up behind joints being pointed with sealant.

3.28 BACK UP
When using back-up material do not reduce depth of joint for sealant to less than the minimum required by the manufacturer of the sealant.

3.29 POINTING, BEAD
Tool sealant to form a smooth, flat bead.

3.30 POINTING, FILLET
Tool sealant to form a smooth fillet with a profile and dimensions required by the sealant manufacturer.

3.31 FINISHING
Remove excess sealant from adjoining surfaces, using the cleaning materials nominated by the sealant manufacturer and leave clean.

Completion - cleaning

3.32 REMOVE TRADE DEBRIS
Remove trade debris by appropriate means on a floor by floor basis as each floor is completed and again before any work is covered up by others. Arrange for general removal.

3.33 CLEANING GENERALLY
Clean with soft, clean cloths and clean water. Finish with a clean squeegee. Do not use abrasive or alkaline materials.

3.34 TRADE CLEAN
Trade clean window frames, operable windows and doors, glass and other related surfaces inside and out at the time of installation to remove marks, dust and dirt, to enable a visual inspection of all surfaces.

3.35 PROTECTIVE COVERINGS
Retain protective coverings and coatings and keep in place during the fixing process. Provide protective coverings and coatings where required to prevent marking of surfaces visible in the completed work and to protect aluminium joinery from following trades. Remove protection on completion.

3.36 SAFETY
Indicate the presence of transparent glasses for the remainder of the contract period, with whiting, tape or signs compatible with the glass type. Indicators other than whiting must not be applied to the glass surface. Masking tape must not be used for this purpose.

3.37 MANIFESTATIONS
To comply with NZS 4223.3, 303.1 Manifestations.

Completion

3.38 PROTECTION
Protect finishes against damage from adjacent and following work.

3.39 REPLACE
Replace damaged, cracked or marked elements.

3.40 LEAVE
Leave work to the standard required for following procedures.

3.41 REMOVE
Remove safety indicators and protective coverings, and wipe down all joinery thoroughly to leave it perfectly clean. Remove debris, unused materials and elements from the site.

4. SELECTIONS

4.1 WIND ZONE
Building wind zone: Medium (as determined from table 5.1 of NZS 3604)

4.12 GLASS
Type: Clear & Double Glazed to all external glazing (except to garage)

4555 GARAGE DOORS

1. GENERAL

This section deals with the manufacture, supply and installation of garage door systems including required opening/operating systems.

Related work

1.1 RELATED SECTIONS

Refer to GLAZING for glazing not forming part of the proprietary garage door.
Refer to PAINTING for painting not forming part of the proprietary garage door.
Refer to GENERAL POWER DISTRIBUTION for power supply to opening system

1.2 DOCUMENTS REFERRED TO

Documents referred to in this section are:

AS/NZS 1170	Structural design actions
NZS 1170.5	Structural design actions - Earthquake actions - New Zealand
NZS 3604	Timber framed buildings
AS/NZS 4505	Domestic garage doors

Documents listed above and cited in the clauses that follow are part of this specification. However, this specification takes precedence in the event of it being at variance with the cited document.

Performance

1.4 LOADS

Garage doors complete with hinges, roller assemblies and fasteners to comply with wind and seismic load performance requirements to NZS 3604, table 5.1, AS/NZS 1170 and NZS 1170

1.5 RESPONSIBILITY FOR PERFORMANCE

Accept responsibility for the structural and weather-tight performance of the completed garage door installation.

2. PRODUCTS

2.1 GARAGE DOOR

Manufactured to AS/NZS 4505 complete with a compliance label stating manufacturer, serial number, wind and seismic classification and testing/certification details

3. EXECUTION

3.1 PREPARATION FOR INSTALLATION

Check that the trimmed and lined openings are formed and constructed to suit the required door units. Do not proceed until openings are properly formed.

3.2 MANUFACTURERS REQUIREMENT FOR INSTALLATION

Install door, track and operating equipment complete with all specified and necessary accessories and hardware to the manufacturer's requirements.

3.3 START UP

Carry out start up procedures and verify proper performance of the doors.

3.4 ADJUSTMENT

Lubricate bearings and sliding parts and adjust doors to operate easily, free of warp, twist or distortion with a weather tight fit round the entire perimeter.

3.5 DEMONSTRATION

Carry out start up procedures and verify proper performance of the door. Demonstrate the operation of the door to the principal/principal's representative. Set security features

to principal's requirements. Reset security features at practical completion of the contract works.

3.6 OPERATING INSTRUCTIONS AND MAINTENANCE PROCEDURES
Provide operating instructions for the garage doors and associated opening equipment. Provide a list of all components requiring regular maintenance.

Completion

3.7 ENSURE
Ensure all elements are free of marks or blemishes, with all moving parts working fully and freely.

3.8 REPLACE
Replace damaged, cracked or marked elements.

3.9 LEAVE
Leave work to the standard required by following procedures.

3.10 REMOVE
Remove all debris, unused materials and elements from the site.

4. SELECTIONS

4.1 WIND ZONE
Building wind zone: Medium (as determined from table 5.1 of NZS 3604)

4611 GLAZING

1. GENERAL

This section deals with the supply and fixing of glass into external and internal joinery, the supply of specialty glasswork (shower and bath screens, shelving, balustrade panels) and mirrors.

Related work

1.1 RELATED SECTIONS

Refer to TIMBER WINDOWS AND DOORS for timber joinery.
Refer to ALUMINIUM WINDOWS AND DOORS for aluminium joinery.
Refer to STEEL WINDOWS AND DOORS for steel joinery.
Refer to COMPOSITE WINDOWS AND DOORS for composite aluminium/timber joinery.
Refer to GLASS BLOCK WALLING for glass block work.
Refer to LIGHT METAL PARTITIONS for demountable partitioning.

Documents

1.2 DOCUMENTS REFERRED TO

Documents referred to in this section are:

NZBC B1/AS1	Structure, 7.0 Glazing
NZBC F2/AS1	Hazardous building materials, 1.0 Glazing
NZBC F4/AS1	Safety from falling, 1.0 Barriers in buildings
AS/NZS 2208	Safety glazing materials in buildings
NZS 3604	Timber framed buildings
NZS 4223.1	Glazing in buildings - The selection and installation of glass in buildings
NZS 4223.3	Glazing in buildings - Human impact safety requirements
NZS 4223.4	Glazing in buildings - Dead, wind and snow loading
AS/NZS 4666	Insulating glass units

BRANZ Bulletin 337 Protecting window glass from damage

Documents listed above and cited in the clauses that follow are part of this specification. However, this specification takes precedence in the event of it being at variance with the cited document.

Warranties

1.5 WARRANTY

Warrant laminated glass and insulating glass units under normal environmental and use conditions against failure of materials.
Warranty period: 10 years

Refer to the PRELIMINARIES AND GENERAL section for the required form of warranty agreement and details of when completed warranty must be submitted.

Performance

1.6 THERMAL STRESS ANALYSIS

Obtain the glass manufacturer's thermal stress analysis for spandrel panels and for tinted, reflective and other solar control vision glasses for review before placing final order.

2. PRODUCTS

Materials

2.1 FLOAT GLASS

To NZS 4223.1, clause 101.2.2.2: (a) Glazing quality: (selection G) for general window glazing. Thickness as required by NZS 4223 1.

2.2 PATTERNED GLASS
Translucent, annealed, rolled glass with a decorative pattern on one surface.

2.6 TOUGHENED GLASS
Grade A safety glazing material to AS/NZS 2208.

2.12 TEMPORARY PROTECTION FILM
Factory applied UV resistant film to protect the glass from construction damage.

2.13 GLASS SCREENS
Proprietary shower/bath screens, formed to shape before toughening, complete with matching hardware.

Materials - mirrors

2.14 MIRROR GLASS
Float plate mirror glass to NZS 4223.1, clause 101.2.2.2: (b) Silvering quality (selection S), with silver and copper plating and 2 coats of protective paint.

2.15 SAFETY MIRROR GLASS
4 mm Float plate mirror with silver plating and vinyl coating, safety glazing material to AS/NZS 2208.

Components, aluminium glazing

2.21 GLAZING TAPES
Single/double pressure sensitive self-adhesive low/medium/high density vinyl foam tapes/butyl tapes selected to suit the glazing detail.

2.22 GASKETS
PVC or Santoprene to window manufacturers' requirements.

2.23 SETTING BLOCKS
Santoprene/Neoprene, 80-90 Shore hardness, set at quarter points or to detail, to support the base of the glass panes. All to comply with NZS 4223.1, clause 105.6 Blocks, and NZS 4666, clause 3.4 Setting blocks.

Components, mirrors

2.25 MIRROR MOUNTING CHANNELS
Refer to SELECTIONS/drawings for type and finish.

2.26 MIRROR DE-MISTER
Refer to SELECTIONS for type.

2.27 MIRROR ADHESIVE
Adhesive mirror-mastic and double-sided adhesive tape.

3. EXECUTION

Conditions

3.1 GENERAL REQUIREMENTS
To NZS 4223.1, 3 and 4 and NZS 4666, with all external glazing wind and watertight on completion.

3.2 DELIVERY
Keep glass dry and clean during delivery and bring on to site when ready to glaze directly into place. Comply also with the storage requirements set out in BRANZ Bulletin 337.

3.3 GLASS CONDITION
All glass of accurate size with clean, undamaged edges and surfaces.

3.4 GLASS THICKNESS

If not specifically stated in the glazing schedule determine the minimum thickness of glass for each sheet as required by NZS 4223.1, sections 103.9 Strength of vertical glass to withstand uniform wind loading, 103.10 Strength of sloped overhead glazing to withstand loadings, and 103.11 Sloping glazing, by:

- determining the maximum wind loading
- calculating glass area, aspect ratio, or span between supports
- establishing the glass thickness
- and finally checking against the requirements of NZS 4223.3.

Determine the final glass thickness based on whether wind loading or human impact considerations govern.

3.5 REBATE DIMENSIONS

Provide rebates for glazing to the widths and depths necessary for each situation including minimum glass edge cover to NZS 4223.1, clause 105.3 Rebate dimensions.

Conditions - human impact safety requirements

3.6 SAFETY GLAZING, GENERAL REQUIREMENTS

Glazing of doors, side panels, low level and window seat glazing, shower doors and screens, bath enclosures, stairwell landings and similar locations, to NZS 4223.3 in respect of, thickness, maximum areas of panel and grade of safety glass for each particular location.

3.7 SAFETY GLAZING MATERIAL

Use only materials from NZS 4223.3, appendix 3.A Schedule of safety glazing materials, that also comply with the relevant requirements of AS/NZS 2208. Ensure material is legibly marked and if cut by the distributor or installer mark each piece to NZS 4223.3, clause 303.7 Identification of safety glazing materials.

3.8 CONTAINMENT

Edge cover to comply with NZS 4223.1, clause 105.4 Edge cover, table 25 Minimum edge cover for single glass exceeding 6 mm thickness, and table 27 Minimum edge cover for single glass up to and including 6 mm thickness. Otherwise to NZS 4223.3, clause 303.2 Containment.

Assembly

3.10 WORKING OF GLASS

All working of glass as required in NZS 4223.1.

3.11 EDGE WORK AND BEVELLING

To NZS 4223.1, table 3 Edgework and bevelling. Refer to SELECTIONS/drawings for type.

3.12 SURFACE TREATMENT

Obscuring process to NZS 4223.1, section 102.3 Obscuring processes. Refer to SELECTIONS/drawings for finish.

3.13 SURFACE CUTTING

Cutting process to NZS 4223.1, section 102.2 Work on glass. Refer to SELECTIONS/drawings for finish.

Application aluminium

3.23 INSTALL GLASS TO ALUMINIUM FRAMES

Install glass to NZS 4223.1.

- Bead glaze to 105.9 Glazing with beads.
- Channel glaze to105.10 Glazing in grooves

3.24 INSTALL SAFETY GLASS
To NZS 4223.3, as modified by NZBC F2/AS1.

Application - mirrors

3.30 MIRRORS, ADHESIVE FIXED
Fix with adhesive mirror-mastic and double-sided adhesive tape. Adhesive mastic area 0.25 m^2 per 1 m^2 of mirror.

Finishing

3.33 SAFETY
Indicate the presence of transparent glasses for the remainder of the construction period, with whiting, tape or signs compatible with the glass type. Indicators other than whiting must not be applied to the glass surface.

3.34 MANIFESTATIONS
To NZS 4223.3, section 303.1 Manifestation (making glass visible).

Completion

3.35 REPLACE
Replace damaged, cracked or marked elements.

3.36 LEAVE
Leave work to the standard required by following procedures.

3.37 REMOVE
Remove debris, unused materials and elements from the site.

3.38 TRADE CLEAN
Clean off or remove safety indicators and any temporary protection film at completion of the building.

4. SELECTIONS

4.1 WIND ZONE
Building wind zone: Medium (as determined by procedure, Table 5.2 of NZS 3604)

4711P PINK® BATTS® INSULATION

1. GENERAL

This section deals with Tasman Insulation Pink® Batts® Ultra™, Pink® Batts® and building insulation blanket (BIB) materials installed, laid, hung or fitted as thermal insulation.

Related work

1.1 RELATED SECTIONS

Refer to 4721P PINK® BATTS® SILENCER® ACOUSTIC INSULATION for acoustic insulation.

Documents

1.2 DOCUMENTS REFERRED TO

Documents referred to in this section are:

NZBC H1/AS1	Energy efficiency, 2.0 Building thermal envelope
AS 1530.1	Methods for fire tests on building materials, components and structures - Combustibility test for materials
NZS 3602	Timber and wood-based products for use in building
NZS 4218	Energy efficiency – Small building envelope
NZS 4243	Energy efficiency – Large buildings
AS/NZS 4534	Zinc and zinc/aluminium-alloy coatings on steel wire

Documents listed above and cited in the clauses that follow are part of this specification. However, this specification takes precedence in the event of it being at variance with the cited document.

1.3 MANUFACTURER'S DOCUMENTS

Manufacturer's and supplier's documents relating to work in this section are:
Tasman Insulation New Zealand: Pink® Batts® Insulation Products Manual

Copies of the above literature are available at

Web:	www.comfortablehomes.co.nz
Telephone:	0800 802 287

Requirements

1.4 NO SUBSTITUTIONS

Substitutions are not permitted to any specified Tasman Insulation **Pink® Batts®** insulation or associated products, components or accessories.

1.5 QUALIFICATIONS

Installers to be **PinkFit® - Preferred Pink® Batts®** installers. A list of approved installers can be obtained from the web, by telephone or from the local building supplies merchant.

Web:	www.comfortablehomes.co.nz
Telephone:	Freephone 0800 746 534 (0800 PINKFIT)

Warranties

1.6 GUARANTEE

Provide a Tasman Insulation **PinkFit®** installation and durability guarantee.

On completion of the installation, provide a Tasman Insulation guarantee on the **PinkFit®** guarantee form.

2. PRODUCTS

Materials

2.1 WIRE NETTING

Galvanized hexagonal 50 mm mesh from 1 mm diameter steel wire to AS/NZS 4534.

2.2 ENVIRONMENTAL CHOICE GLASS WOOL THERMAL INSULATING PADS
Pink® Batts® Ultra™ Environmental Choice "Licence No. 2504017 – Thermal (resistive type) building insulants", non combustible to AS 1530.1, bio-soluble glass wool manufactured from up to 80% recycled glass, bonded with a thermosetting resin to form rectangular insulating pads and tested for rigidity for wall applications.

Components

2.7 FASTENERS
Insul anchors complete with retaining washer.

2.8 TAPES
Proprietary plastic tape stapled across framing to retain insulation in unlined wall and ceiling locations.

2.9 ADHESIVE TAPE
Pressure sensitive adhesive tape.

3. EXECUTION

Conditions

3.1 STORAGE
Only accept materials undamaged and dry and store in a location that protects them from the weather and damage. Avoid distortion, stretching, compression, puncturing and damage to edges of materials. Do not use damaged or wet insulation materials.

3.2 HANDLING
Wear protective clothing as necessary and when handling, avoid delamination or distortion of the rectangular form. Maintain full thickness unless compression is an installation system requirement.

3.3 INSPECTION
Before starting installation of blankets and pads, check that the location and framing are free from moisture, that the cavities are not interconnected and that mesh, building papers and vapour barriers are in place.

Application

3.4 FIT GLASS WOOL THERMAL INSULATING PINK® BATTS® ULTRA™
Lay, install, fit and fix Environmental Choice "Licence No. 2504017 – Thermal (resistive type) building insulants", **Pink® Batts® Ultra™** to NZBC H1/AS1: Energy efficiency, 2.0 Building thermal envelope. Choose insulation to provide R values in housing to NZS 4218 and in large buildings to NZS 4243.

Friction fit insulating **Pink® Batts® Ultra™** in place to completely fill the whole of the cavities with no gaps and with no folds and to the Tasman Insulation requirements. Slightly oversize length for friction fit and cut across pad and fill cavity. Cut smaller pieces for smaller spaces and around penetrations. Leave no gaps between, and maintain full thickness of the insulating segments over the whole of the installation. Do not cover vents. Leave a clear 150 mm clear gap around recessed light fittings and metal flues.

Completion

3.10 CLEAN UP
Clean up as the work proceeds, so no spare offcuts or any other matter or item remain behind claddings or linings.

3.11 LEAVE
Leave work to the standard required by following procedures.

3.12 REMOVE
Remove debris, unused materials and elements from the site.

4. SELECTIONS

Environmental Choice Insulation
Licence No. 2504017 – Thermal (resistive type) building insulants

4.1 GLASS WOOL THERMAL INSULATION PINK® BATTS® ULTRA™, WALLS
Location: ~
Brand: **Pink® Batts® Ultra™**
R value: R2.6

4.2 GLASS WOOL THERMAL INSULATION PINK® BATTS® ULTRA™, CEILING
Location: ~
Brand: **Pink® Batts® Ultra™**
R value: R3.6

5113G GIB® PLASTERBOARD LININGS

1. GENERAL

This section deals with the supply, fixing and jointing of GIB® plasterboard linings and accessories to timber and steel framed walls and ceilings to form standard, bracing, fire-rated, wet area, impact resistant, X-Ray protection, lift shaft and sound insulation systems.

Related work

1.1 RELATED SECTIONS

Refer to GIB ULTRALINE® PLUS LINING SYSTEM for GIB Ultraline® PLUS plasterboard linings.

Documents

1.2 DOCUMENTS REFERRED TO

Documents referred to in this section are:

AS/NZS 2588 Gypsum plasterboard
AS/NZS 2589 Gypsum linings - Application and finishing
NZS 3604 Timber framed buildings
BRANZ technical paper P21: A wall bracing test and evaluation procedure

Documents listed above and cited in the clauses that follow are part of this specification. However, this specification takes precedence in the event of it being at variance with the cited document.

Requirements

1.5 NO SUBSTITUTIONS

Substitutions are not permitted to any specified GIB® systems, GIB® system components, GIB® plasterboard, associated GIB® products or GIB® accessories.

1.6 INSTALLER WORK SKILLS AND QUALIFICATIONS

GIB® plasterboard fixers and plasterers to be experienced competent workers, familiar with GIB® plasterboard lining systems installation and finishing techniques. Submit evidence of experience on request. For example:

- National Certificate of Interior Systems; or
- Contractor membership of the Association of Wall and Ceiling Industries New Zealand (AWCINZ)

Performance

1.7 INSPECTIONS AND ACCEPTANCE

Allow for inspection of the finished plasterboard surface:

- before applying sealer and
- before applying finish coatings or decorative papers,

so that after assessment of the type and/or angle of illumination and its effect on the completed decorative treatment, group approval and acceptance of the surface can be given.

1.10 BRACING REQUIREMENTS

Provide braced wall systems using bracing rated plasterboard sheet to meet the requirements of NZS 3604 when tested to BRANZ technical Paper P21: A wall bracing test and evaluation procedure. Refer to drawings for location and type.

2. PRODUCTS

Materials

2.1 GIB® PLASTERBOARD
Gypsum plaster core encased in a face and backing paper formed for standard and water resistance use to AS/NZS 2588. Refer to SELECTIONS for location, type, thickness and finish.
GIB® Standard plasterboard
GIB Braceline® wall bracing plasterboard
GIB Aqualine® wet area plasterboard

Components

2.5 SCREWS
GIB® Grabber® drywall screws.

2.6 NAILS
GIB® Nails (gold passivated).
Size: 30 mm, 40 mm

2.7 METAL ANGLE TRIMS
GIB® galvanized steel slim angle trims.

2.8 CONTROL JOINTS
GIB® Rondo® P35 control joints.

2.9 TAPE ON TRIMS AND EDGES
GIB® Goldline™ tape-on paper tape and galvanized steel trims and edges or GIB® UltraFlex high impact corner mould.

Accessories

2.10 ADHESIVE

Timber frame:	GIBFix® Wood Bond wallboard adhesive.
Timber frame LOSP treated:	GIBFix® All-Bond wallboard adhesive.
Steel frame:	GIBFix® All-Bond wallboard adhesive.

2.11 JOINTING COMPOUND

Bedding compound:	GIB Tradeset®, GIB Lite Blue®, GIB Promix® All Purpose, GIB® AquaMix, GIB Plus 4®
Finishing compound:	GIB ProMix® All Purpose GIB ProMix® Lite, GIB® All Purpose and GIB Plus 4®, GIB® Topcoat

2.12 JOINTING TAPE
GIB® paper jointing tape.

Finishes

3. EXECUTION

Conditions

3.1 STORAGE
Store GIB® plasterboard sheets and accessories in dry conditions stored indoors out of direct sunlight in neat flat stacks on either an impervious plastic sheet or clear of the floor with no sagging and avoiding damage to ends, edges and surfaces. Reject damaged material. Refer to GIB® Site Guide (May 2006).

3.2 LEVELS OF PLASTERBOARD FINISH
Provide the selected plasterboard surfaces to the pre decorative levels of finish specified in AS/NZS 2589. Refer to GIB® Site Guide (May 2006).

3.3 CONFIRM LEVELS OF PLASTERBOARD FINISH ACCEPTANCE
Before commencing work, agree in writing upon the surface finish assessment procedure necessary to ensure that the levels of finish specified, along with the effect of the type and/or angle of illumination on them, are obtained and are acceptable.

Do not apply decorative treatment until it is agreed in writing by the contractor, subcontractors and decorator that the required plasterboard level of finish has been achieved.

"Levels of plasterboard finish" is a tool for specifying the required quality of finish when installing and flush stopping GIB® plasterboard **prior** to the application of a range of decorative finishes under various lighting conditions. Refer to GIB® Site Guide (May 2006).

3.4 SUBSTRATE
Do not commence work until the substrate is plumb, level and to the standard required by the sheet manufacturer's requirements. Refer to GIB® Site Guide (May 2006).

3.5 TIMBER FRAME MOISTURE CONTENT
Maximum allowable moisture content to AS/NZS 2589 for timber framing at lining: 18% or less for plasterboard linings. Refer to GIB® Site Guide (May 2006).

3.7 PROTECTION
Protect surfaces; cabinetwork, fittings, equipment and finishes already in place from the possibility of water staining and stopping damage. Refer to GIB® Site Guide (May 2006).

Application

3.9 LINING WALLS AND CEILINGS GENERALLY
Form to GIB® Site Guide (May 2006). Ensure bulk insulation thickness shall not exceed that of the wall framing.

3.12 FORM WET AREA SYSTEMS
Form to GIB Aqualine® Wet Area Systems (October 2002 v2).

3.13 FORM BRACING SYSTEMS
Form to GIB® Bracing Systems (March 2006).

3.19 INSTALL TAPE-ON TRIMS
Install to GIB® Goldline™ Tape-on trims literature and/or GIB® Ultraflex high impact corner mould literature.

Finishing

3.20 FINISHING GENERALLY
To GIB® Site Guide (May 2006) and AS/NZS 2589.

Completion

3.21 REPLACE
Replace damaged sheets or elements.

3.22 CLEAN DOWN
Clean down completed surfaces to remove irregularities and finally sand down with fine paper to the sheet manufacturer's requirements, to leave completely smooth and clean.

3.23 REMOVE
Remove debris, unused materials and elements from the site.

3.24 LEAVE
Leave work to the standard required by following procedures.

4. SELECTIONS

Plasterboard

4.1 STANDARD SYSTEMS WALLS

Location	Plasterboard type / Lining requirements	Thickness	Finish level
All walls except wet areas	GIB® Standard plasterboard	10 mm	Level 4
Walls in wet areas	GIB Aqualine® plasterboard	10 mm	Level 4

4.2 STANDARD SYSTEMS CEILINGS

Location	Plasterboard type / Lining requirements	Thickness	Finish level
All ceilings except wet areas	GIB® Standard plasterboard	13 mm	Level 4
Ceilings in wet areas	GIB Aqualine® plasterboard	13 mm	Level 4

4.7 BRACING SYSTEMS

Refer to GIB Bracing Systems (March 2006). For bracing element location refer to drawn documentation.

5511 JOINERY FIXTURES

1. GENERAL

This section deals with joinery fittings and cabinetwork, purpose made in a factory and fitted on site.

Related work

1.1 RELATED SECTIONS
Refer to SANITARY FIXTURES, TAPWARE AND ACCESSORIES for fittings for bathrooms, toilets and washrooms.

Documents

1.2 DOCUMENTS REFERRED TO
Documents referred to in this section are:
AS/NZS 1859.2 Reconstituted wood based panels - Dry processed fibreboard
AS/NZS 1860.1 Particleboard flooring - Specifications

Documents listed above and cited in the clauses that follow are part of this specification. However, this specification takes precedence in the event of it being at variance with the cited document.

2. PRODUCTS

Materials

2.1 TIMBER BOARDS AND FRAMES
Boards and frames carefully sawn to minimise the inherent warping, twisting and bowing of the selected species and to give a finish suitable for clear finishing.

2.4 MEDIUM DENSITY FIBRE BOARD
Urea-formaldehyde resin bonded wood fibre sheet to AS/NZS 1859.2.

2.6 MEDIUM DENSITY FIBRE BOARD, MELAMINE VENEER
Urea-formaldehyde resin bonded wood fibre sheet to AS/NZS 1859.2 veneered both sides with melamine sheet.

2.7 MEDIUM DENSITY FIBRE BOARD, WOOD VENEER
Urea-formaldehyde resin bonded wood fibre sheet to AS/NZS 1859.2 veneered with selected wood veneer.

2.8 SOLID POLYMER BOARD
Non-porous polymer formed with a homogenous blend of alloys and fillers into a solid rigid sheet. Worked by certified fabricators only.

2.9 BACKING BOARD
Urea-formaldehyde resin bonded very fine wood fibre sheet to AS/NZS 1859.2.
Minimum thickness: 6 mm

2.10 PRE-FINISHED BACKING BOARD
Urea-formaldehyde resin bonded fine wood fibre sheet to AS/NZS 1859.2, veneered one side with melamine sheet.
Minimum thickness: 6 mm

Components

2.11 BENCHTOPS
As detailed on the drawings and as required for specified fittings and appliances.

2.12 CARCASE CONNECTORS
One-piece steel, straight deep-cut thread, fibre board screws with press fit plastic trim cap.

2.13 CARCASE FASTENERS
Knock down type centric sphere zinc alloy connectors with connecting bolts, sleeves and dowels, to suit each particular fastening location.

2.14 BUTT HINGES
Butt, broad butt, flush butt or overlay steel or brass, to suit the location, or as detailed.

2.15 CONCEALED HINGES
All-metal zinc alloy with automatic spring and screw-fixed. Door stops of plastic foam with self adhesive backs, or plastic buttons.

2.16 GLASS DOOR HINGES
All-metal, requiring no glass drilling, with automatic spring, screw-fixed and with matching door pulls.

2.17 FLAP HINGES
All-metal, flush-fitted and screw-fixed with no gap when the flap is down.

2.18 FLAP STAY
All-metal, slide/folding and screw fixed.

2.19 DRAWER RUNNERS
Groove mounting type, precision running ball-mounted single-stage extension, bright steel finish system.

Accessories

2.20 ADHESIVES
As approved by the manufacturer for the timber product or pre-finished timber product joint being used.

Finishes

2.21 LIGHT DUTY COATING SYSTEM
Single pack, clear or pigmented nitro-cellulose or pre-catalysed lacquer.

2.22 MEDIUM DUTY COATING SYSTEM
Two pack, clear or pigmented acid catalysed coating.

2.23 HEAVY DUTY COATING SYSTEM
Two pack, clear or pigmented polyurethane coating.

3. EXECUTION

Conditions

3.1 JOINERY FIXTURES GENERALLY
Execution to include those methods, practices and processes contained in the current syllabus for the National Certificate in Carpentry and the National Certificate in Joinery (cabinetry, exterior joinery, stairs). Take responsibility for the completed joinery fixtures including fittings included within fixtures and the on site installation.

3.2 SITE MEASURE
Site check and confirm dimensions after wall linings have been fixed. Verify positions of electric power outlets, wiring to light fittings included in joinery fixtures, water supplies and waste pipe locations.

3.3 SHRINKAGE
Arrange jointing and fixing so that shrinkage in any part and direction does not impair the strength or appearance of the finished work or damage the adjoining work.

3.4 TOLERANCES
Provide reasonable tolerances at connections between the joinery fittings and the building fabric so that any irregularities are adequately compensated for in the site fixing.

3.5 NATURAL FINISH TIMBER
Select timber for match or uniformity or symmetry of colour or grain of adjacent pieces. Finish to same standard on all faces.

3.6 PRE-FINISH WOOD VENEER
Select veneer board for match or uniformity, or symmetry of colour or grain of adjacent pieces. Finish to same standard on all faces. Clash exposed edges with solid matching timber strips.

3.7 PRE-FINISH MELAMINE VENEER
Select and match all adjacent pieces. Clash exposed edges of wood grains with solid matching timber strips and with selected PVC strips to other patterns.

Conditions - site

3.8 TRANSIT
Load, transport and unload fittings without distortion or damage and keep covered to protect from the weather.

3.9 DELIVERY
Deliver fittings to the site only when floor, wall and ceiling surfaces are in place and the fittings can be immediately placed in their final location.

Assembly

3.10 MACHINING
Carry out machining within the practices required for the particular timber, wood product or pre-finished wood product being used. Machine drill holes, cut recesses and form joints ready for assembly to the componentry manufacturer's requirements. Ensure work is accurate, square and true to line.

3.11 MAKE CUT OUTS FOR APPLIANCES AND FITTINGS
Obtain fitting templates from the appliances and other fittings to be installed within joinery fixtures and bench tops. Ensure appliances and fittings can be installed with the required tolerances and clearances. Where bench tops are being provided under other work sections, provide templates and confirm dimensions to others.

3.12 ASSEMBLY
Carry out gluing, dowelling, and other operations necessary for the proper assembly of the fittings as detailed with fixings concealed unless detailed otherwise. Scribe fit adjustable shelves with 4 shelf pins to each and with force fit pin holes at 50 mm maximum centres in solid cheeks. Construct drawers and using groove mounting runners, fit them with 3 mm clearance into drawer space. Hang doors on concealed hinges with 115 degree openings except where detailed for 170 degrees.

3.13 GLUE JOINTS
Use glue joints where provision for shrinkage is not required. Cross-tongue or otherwise reinforce. Surfaces in contact to have an even sawn or planed finish and be free of contamination. Mix, apply and set to the glue manufacturer's requirements with adequate pressure applied to ensure intimate contact that will be maintained while the glue sets.

3.14 CONNECTOR JOINTS
Locate and drive connectors to the board manufacturer's requirements. Fit plastic trim cap where detailed. Conceal or hide from sight other connector heads.

3.15 FASTENER JOINTS
Locate and drive connecting bolts to the board manufacturer's requirements. Form joint and fit and rotate centric sphere connector to finish it rigid and tightly fitting over the whole length of the joint.

Application

3.16 FIXING ON SITE
- Scribe fit and conceal fix rigidly in place square, level, plumb and true to line and face as detailed and to the required standard.
- Assemble fittings on-site if brought in sections.
- Fit counter and bench tops and upstands.
- Complete with moveable parts in place and freely moving in their proper range.

Finishing

3.17 COATING SYSTEM, PREPARATION
- Fill timber defects with proprietary wood filler. (e.g. cracks, holes, etc)
- Sand timber to a smooth even finish using 180 grit paper.
- Remove all sanding dust using air guns and tack rags.
- Ensure substrate is free from dust, grease, dirt and other contaminants.
- Ensure moisture content of the timber is less than 15% immediately before commencing coating operations.

3.18 COATING SYSTEM, APPLICATION
To coating manufacturer's requirements.

3.19 PROTECT
Protect finished surfaces from damage.

Completion

3.20 REPLACE
Replace damaged or marked elements.

3.21 LEAVE
Leave work complete, clean and without blemish and to the standard required by following procedures.

3.22 REMOVE
Remove debris, unused materials and elements from the site.

HURUNUI DISTRICT COUNCIL
Plans and specifications APPROVED.
In accordance with the Building Act 2004, clause 49(1) and the associated Building Regulations.
Signed .....

6211 WALL TILING

1. GENERAL

This section deals with the supply and installation of ceramic wall tiles to cement render, concrete masonry and timber substrate walls.

Related work

1.1 RELATED SECTIONS

Refer to FLOOR TILING for floor tiling.

Documents

1.2 DOCUMENTS REFERRED TO

Documents referred to in this section are:

AS 2358	Adhesives - For fixing ceramic tiles
AS 3740	Waterproofing of wet areas within residential buildings
AS 3958.1	Ceramic tiles - Guide to the installation of ceramic tiles
BS 6431	Ceramic floor and wall tiles
BRANZ Good practice guide	Tiling

Documents listed above and cited in the clauses that follow are part of this specification. However, this specification takes precedence in the event of it being at variance with the cited document.

Requirements

1.4 SAMPLES

Submit on request samples of the tiles specified, sufficient to show the pattern and the range of colour finish.

1.5 QUALIFICATIONS

Tiling to be carried out by competent workers experienced with the materials and in the techniques specified.

1.6 DEFLECTION CRITERIA

Check the deflection of walls does not exceed $^{1}/_{360}{}^{th}$ of the span under dead and live load.

1.7 ADHESIVES COMPATIBILITY

Adhesives selected for use on proprietary substrates or waterproof membranes to have documented compatibility approval from the respective manufacturers.

1.8 PROVIDE SPARE TILES

Provide spare tiles. Refer to SELECTIONS for type and quantity.

Warranties

1.9 WARRANTY

Warrant this work under normal environmental and use conditions against failure of materials and execution

Warranty period: 2 years

Refer to the PRELIMINARIES AND GENERAL section for the required form of warranty agreement and details of when completed warranties must be submitted.

2. PRODUCTS

Materials

2.1 WALL TILES

To BS 6431. Refer to SELECTIONS for product selection.

Accessories

2.4 SAND AND CEMENT GROUT
1 part Portland cement to 2-3 parts fine sand mixed to a paste consistency with a minimum of clean water.

2.5 GROUT
Cement based, compressible and to suit particular location/use.

2.6 TILE ADHESIVE
To AS 2358.

2.7 MOVEMENT JOINT SEALANT
To BRANZ Good practice guide: Tiling, section 5.0.
- Neutral cured sealant for areas where waterproof membranes are used or where used against aluminium.
- Acid cured sealant except for areas where waterproof membranes are used or where used against aluminium.

3. EXECUTION

3.1 HANDLING AND STORAGE
Take delivery of packets of tiles undamaged and dry. Handle tiles with care to avoid chipping, soiling and damage. Store on hard level standings in non-traffic, non work areas that are enclosed, clean and dry.

3.2 CHECK TILES
Check tiles to ensure that they are as specified, from the same batch, of a consistent colour and pattern and sufficient to complete the work. Reject tiles that vary widely in colour or pattern. Reject tiles that are damaged.

3.3 CONFIRM LAYOUT
Before commencing work confirm the proposed layout of tiles and expansion joints and other visual considerations of the finished work.

3.4 SETTING OUT
Before commencing the setting out confirm the number and location of cut tiles. Minimise in number with no cut tiles less than half size and only at the perimeter of the work.

Conditions

3.5 SERVICES AND ACCESSORIES
Ensure that all services and accessories are in place and located to suit the tile layout, and that the substrate, background and adjoining surfaces (with the preparation called for in this section) are of the quality necessary to allow tiling of the required standard.

3.6 SUBSTRATE TEMPERATURE
Do not carry out tiling where the substrate temperature is below 5°C or above 40°C.

3.7 LIGHTING
Light the tile work as closely and clearly as possible to that of the finished lighting, to ensure that differences in plane surface are highlighted during installation.

Application - preparing new surfaces

3.9 NEW SHEET LININGS
Remove contaminants that may affect bonding or adhesion. Surface to finish clean and dry with a texture to give a complete key to the tile manufacturer's requirements and with a maximum variation in the background plane of 4 mm in 2 metres.

Application - preparing existing surfaces

3.11 EXISTING SHEET LININGS
Remove paint and other finishes sufficiently to obtain a key and remove contaminants that affect bonding or adhesion. Surface to finish clean and dry with a texture to give a complete key to the stile manufacturer's requirements.

Application - tile installation

3.15 TILE FIXING GENERALLY
Apply adhesive, prepare and fix tiles by the method required by the adhesive manufacturer and tap them firmly into place.

3.16 FITTING TILES
Ensure cut edges are smooth and installed without jagged or flaked edges. Do not install single tiles in more than one piece. Maintain the heights of wall tile work in full courses to the nearest dimension. Within allowed tolerances, ensure corners of tiles are flush and level with corners of adjacent tiles. Keep joint lines, including mitres, straight and of an even width. Fully bed trim units, moulded or shaped pieces and other accessories with an appropriate bedding material. Fix accessories level, plumb and true to the designated projection at detailed locations and heights.

3.17 MOVEMENT JOINTS
Provide movement joints with a minimum width of 4 mm, carried through tile and bedding and where substantial movement is anticipated, through the rigid sheet to the structure. Install joints over expansion joints, at junctions between different backgrounds, abutting other materials, at storey heights horizontally and 3 to 4 metres vertically, at internal corners and at junctions with floors and columns. Ensure joints are clean, formed, filled and with sealant inserted to the sealant manufacturer's requirements.

3.18 TILE FINISH AND JOINTS
Ensure finished surfaces are flat and true to a tolerance of ± 4 mm in 2 metres from the required plane. Clean surplus bedding material from joint spaces and tile surface. Ensure joint widths are consistent throughout the installation with 1.5 mm width for dust-pressed tiles and 6 mm for extruded tiles, measured at the tile face. Ensure joint alignment is consistent throughout the installation and to a tolerance of ± 4 mm in 2 metres from the detailed joint alignment.

3.20 THICK BED FIXING
Apply thick-bed cement based adhesive to an average 6 mm bed thickness as a floated bed and to the tile manufacturer's requirements. Prepare and fix tiles by the method required by the tile manufacturer and beat and tap them firmly into place.

Grouting

3.21 APPLY GROUTING
Remove spacers. Apply grouting mix to as large an area as can be worked before setting commences. Work with a grouting tool back and forth until joints are completely filled with no adhesive showing. Avoid damage to the surface of tiles, using masking tape where necessary. Finish to the depth of the cushion and flush with surface to cushion edge and square edge tiles. Remove surplus grout with a damp cloth and tool the joints to finish the grout uniform in colour, smooth and without voids, pinholes or low spots.

3.22 APPLY PROPRIETARY GROUTING
Remove spacers. Prepare joints, mix and apply grout and finish off to the tile manufacturer's requirements, uniform in colour, smooth and without voids, pinholes or low spots.

Completion

3.23 REPLACE
Replace damaged tiles or elements.

3.24 CLEANING

Upon completion of setting and grouting, thoroughly sponge and wash the tiles to leave them completely clean and without blemish. Finally polish glazed tiles with a clean dry cloth.

3.25 LEAVE

Leave work to the standard required by following procedures.

3.26 REMOVE

Remove debris, unused materials and elements from the site.

6221 FLOOR TILING

1. GENERAL

This section deals with the supply and setting of ceramic tiles to concrete and timber substrate floors, including floor overlays.

Related work

1.1 RELATED SECTIONS

Refer to WALL TILING for wall tiling.

Documents

1.2 DOCUMENTS REFERRED TO

Documents referred to in this section are:

NZBC D1/VM1	Access routes
NZBC D1/AS1	Access routes
	2.0 Level access routes
	3.0 Ramps
AS 2358	Adhesives - For fixing ceramic tiles
AS 3958.1	Ceramic tiles - Guide to the installation of ceramic tiles
AS/NZS 3661.1	Slip resistance of pedestrian surfaces - Requirements
AS/NZS 4671	Steel reinforcing materials
BS 5385	Wall and floor tiling, Part 4 Tiling and mosaics in specific conditions
BS 6431	Ceramic floor and wall tiles
BRANZ Good practice guide: Tiling	

Documents listed above and cited in the clauses that follow are part of this specification. However, this specification takes precedence in the event of it being at variance with the cited document.

Requirements

1.4 SAMPLES

Submit on request samples of the tiles specified, sufficient to show the pattern and the range of colour finish.

1.5 QUALIFICATIONS

Tiling to be carried out by competent workers experienced with the materials and in the techniques specified.

1.6 DEFLECTION CRITERIA

Check that the deflection of suspended floors does not exceed $^{1}/_{360}{}^{th}$ of the span under dead and live load.

1.7 ADHESIVES COMPATIBILITY

Adhesives selected for use on proprietary substrates or waterproof membranes to have documented compatibility approval from the respective manufacturers.

1.8 PROVIDE SPARE TILES

Provide spare tiles. Refer to SELECTIONS for type and quantity.

Warranties

1.9 WARRANTY

Warrant this work under normal environmental and use conditions against failure of materials and execution

Warranty period: 2 years

Refer to the PRELIMINARIES AND GENERAL section for the required form of warranty agreement and details of when completed warranties must be submitted.

Performance

1.10 SLIP RESISTANCE FOR ACCESS ROUTES
Slip resistance for tiles to comply with NZBC D1/AS1: 2.1 Level access routes and 3.1 Ramps.
- when in place on a level access route, to have a mean coefficient of friction (μ) not less than 0.4 when tested in accordance with AS/NZS 3661.1, appendix A and B.
- when in place on a sloping access route, to have a coefficient of friction (μ) not less than 0.4 x 0.0125S (S = slope of surface expressed as a percentage).

1.11 PROVIDE EVIDENCE OF SLIP RESISTANCE
Provide evidence that the tiles comply with the standard of performance specified.

1.12 CERTIFY SLIP RESISTANCE
Provide certificates and any other evidence at the time of selection/supply that the tiles comply with NZBC D1/VM1 and NZBC D1/AS1: Access routes.

2. PRODUCTS

Materials

2.1 FLOOR TILES
To BS 6431, parts 1 to 23 inclusive. Refer to SELECTIONS for product selection.

2.2 REINFORCING MESH
To AS/NZS 4671, galvanized 500 mm x 500 mm x 2.5 mm.

2.3 SEPARATING LAYER
Single layer polyethylene film.

2.4 BUILDING PAPER
Breather type bitumen saturated kraft paper.

2.6 FLOOR OVERLAY
6 mm Thick sheet of Portland cement, sand, fine cellulose fibre and water, with a smooth finish.

Components

2.9 EXPANSION JOINT, METAL AND RUBBER
Clear anodised aluminium/brass with metal anchor to set into in-situ concrete, cement screed/bed and complete with rubber infill.

2.10 EXPANSION JOINT, METAL AND COMPOUND
Aluminium/brass angles with high density foam rubber insert and jointing compound.

2.11 EXPANSION JOINT, PLASTIC
Rigid stabilised PVC sides with flexible central section.

Accessories

2.12 SCREED
Mix of 3:1 Portland cement, coarse washed sand gauged with liquid polymer additive to the tile manufacturer's stated requirements.

2.13 CEMENT MORTAR
Sand and cement bedding coat with liquid polymer additive, to the tile manufacturer's stated requirements.

2.16 TILE ADHESIVE
Cement based ceramic tile adhesive to AS 2358 and BS 5385, part 4.

2.17 SAND AND CEMENT GROUT
1 part Portland cement to 2-3 parts fine, washed sand, mixed to a paste consistency with a minimum of clean, potable water.

2.18 PROPRIETARY GROUT
Cement based, compressible and to suit the particular location and/or use and the tile manufacturer's requirements.

2.19 MOVEMENT JOINT SEALANT
To BRANZ Good practice guide: Tiling, section 5.0.
- Neutral cured sealant for areas where waterproof membranes are used or where used against aluminium.
- Acid cured sealant except for areas where waterproof membranes are used or where used against aluminium.

3. EXECUTION

3.1 HANDLING AND STORAGE
Take delivery of packets of tiles undamaged and dry. Handle tiles with care to avoid chipping, soiling and damage. Store on hard level standings in non-traffic, non work areas that are enclosed, clean and dry.

3.2 CHECK TILES
Check tiles to ensure that they are as specified, from the same batch, of a consistent colour and pattern and sufficient to complete the work. Reject tiles that vary widely in colour or pattern. Reject tiles that are damaged.

3.3 CONFIRM LAYOUT
Before commencing work confirm the proposed layout of tiles and expansion joints and other visual considerations of the finished work.

3.4 SETTING OUT
Before commencing the setting out confirm the number and location of cut tiles. Minimise in number with no cut tiles less than half size and only at the perimeter of the work.

3.5 GENERALLY
Prepare surface and complete tiling work in accordance with AS 3958.1, as modified by BRANZ Good practice guide: Tiling.

Conditions

3.6 SERVICES AND ACCESSORIES
Ensure that all services and accessories are in place and located to suit the tile layout, and that the substrate, background and adjoining surfaces (with the preparation called for in this section) are of the quality necessary to allow tiling of the required standard.

3.7 DO NOT START
Do not start laying tiles until concrete floors are cured, moisture content of floors is such that shrinkage is complete, thermal movement has been accommodated and the levels and surface finish will achieve tile laying of the required standard.

3.8 SUBSTRATE TEMPERATURE
Do not carry out tiling where the substrate temperature is below 5°C or above 40°C.

3.9 MOISTURE CONTENT
Ensure the floor is dry and if in doubt check for moisture content by hygrometer. Do not proceed with tiling work until readings for the whole area show 75% relative humidity or less.

Application - preparing new surfaces

3.10 CONCRETE FLOORS
Completely remove surface contaminants such as paints, oils, release and curing compounds. Remove projections, unevenness and loose material to leave a clean dust and dirt free surface.

3.11 SCREEDS
Form screeds with a deviation from plane of not more than 5 mm over 3 metres.

3.12 FALLS
Form screeds in areas where water is used in significant amounts with a deviation from plane of not more than 5 mm over 3 metres. Unless otherwise specified form screeds with the following falls:

1 : 40 minimum For shower bases

Movement joints

3.17 MOVEMENT JOINTS
Provide movement joints with a minimum width of 4 mm, carried through tile and bedding and where substantial movement is anticipated, through the rigid sheet to the structure. Install joints over expansion joints, at junctions between different backgrounds, abutting other materials, at internal corners and at junctions with floors and columns. Ensure joints are clean, formed, filled and with sealant inserted to the sealant manufacturer's requirements.

Application - interior tile installation

3.27 CEMENT BASED FLEXIBLE ADHESIVE
Prime surface, spread adhesive to a uniform minimum thickness of 4-6 mm and rib it with a notched trowel to the tile manufacturer's requirements. Press tiles and beat it into place to obtain adequate coverage by adhesive on the back of each tile.

3.28 CEMENT BASED ADHESIVE
Apply liquid waterproof membrane to the membrane manufacturer's requirements. Apply and float thick/thin bed cement based adhesive to a maximum/minimum 6 mm/3 mm bed thickness to the tile manufacturer's requirements. Rib surface with a notched trowel, press tiles and beat it into place with 3 mm joints and to obtain adequate coverage by adhesive on the back of each tile.

3.29 CEMENT MORTAR AND SEPARATING LAYER
Lay polyethylene sheet/building paper to a smooth surface with joints lapped 100 mm minimum. Place galvanized steel mesh over with spacers to centralise it in the mortar bed. Thoroughly mix and place the 50 mm thick mortar bed and firmly tamp, screed and compact to the required level. Apply proprietary cement slurry bond coat to the wet mortar bed and set tiles while still tacky firmly beating into the bedding, aligning the 3 mm tile joints at the same time.

Grouting

3.37 APPLY GROUTING
Remove spacers. Apply grouting mix to as large an area as can be worked before setting commences. Work with a grouting tool back and forth until joints are completely filled with no adhesive showing. Avoid damage to the surface of tiles, using masking tape where necessary. Finish to depth of cushion and flush with surface to cushion edge and square-edge tiles. Remove surplus grout with a damp cloth and tool the joints to finish the grout uniform in colour, smooth and without voids, pinholes or low spots.

Completion

3.39 REPLACE
Replace damaged tiles or elements.

3.40 CLEANING

Upon completion of setting and grouting, thoroughly sponge and wash the tiles to leave them completely clean and without blemish. Finally polish glazed tiles with a clean dry cloth.

3.41 LEAVE

Leave work to the standard required by following procedures.

3.42 REMOVE

Remove debris, unused materials and elements from the site.

3.43 PROTECT TILES

Protect tiles from damage. Ensure tiles are not disturbed by foot traffic for at least 24 hours after laying and after grouting. Provide protection to tiles by laying sheet material such as insulating board for the period between completion of laying and completion of the contract works.

6511 CARPETING

1. GENERAL

This section deals with the supply and installation of carpet underlay and woven sheet carpet; laid conventionally (stretched), direct stuck or double stuck down. It is not suitable for natural fibre floor coverings.

Related work

1.1 RELATED SECTIONS
Refer to FLOORING SUBSTRATE PREPARATION for preparation of floors.

Documents

1.2 DOCUMENTS REFERRED TO
Documents referred to in this section are:
AS/NZS 2455.1 Textile floor coverings - Installation practice - General

Documents listed above and cited in the clauses that follow are part of this specification. However, this specification takes precedence in the event of it being at variance with the cited document.

Requirements

1.4 SAMPLES
Provide samples of each carpet for review of colour, design and quality. Submit on request samples of underlay and accessories offered.

1.5 QUALIFICATIONS
Carpet layers to be experienced competent workers, familiar with the materials and the techniques specified and with AS/NZS 2455.1.

1.6 RESERVE MATERIAL
Supply reserve carpet, all suitably packaged for delivery and storage. Refer to 4. SELECTIONS.

Warranties

1.7 WARRANTY
Warrant this work under normal environmental and use conditions against failure.
Warranty period - materials: 5 years
Warranty period - execution: 1 year

Refer to the PRELIMINARIES AND GENERAL section for the required form of warranty agreement and details of when completed warranties must be submitted.

2. PRODUCTS

Materials

2.1 UNDERLAY
Refer to SELECTIONS for product selection.

2.2 CARPET
Refer to SELECTIONS for product selection.

Components

2.3 BINDER BARS
Anodised aluminium section with fluted face.

2.4 DIVIDER STRIPS
Hardwood strips 20 mm x 15 mm or as specified. Refer to SELECTIONS for type and size.

2.5 EDGE GRIPPER
Timber/plywood with steel grippers to carpet manufacturer's requirements.

Accessories

2.7 ADHESIVE, UNDERLAY
To AS/NZS 2455.1, clause 1.5.3. and underlay manufacturer's requirements.

2.8 ADHESIVE, CARPET
To AS/NZS 2455.1, clause 1.5.3. and carpet manufacturer's requirements.

2.9 TAPE
To carpet manufacturer's requirements.

3. EXECUTION

Conditions

3.1 INSPECTION
Before starting work inspect the substrate to ensure that it will allow work of the required standard and that all fittings and fixtures around which the carpet is to be scribed, are in place.

3.2 PROTECTION
Protect adjoining work surfaces and finishes during the carpet installation.

3.3 TAPE
Tape for binding and seaming using type and width required by the carpet manufacturer to suit the specified carpet and the standard of performance required.

3.4 LAYOUT
Plan the general layout so that:
- seams run lengthways
- traffic runs along the seam
- light from windows is not across the seam
- pile faces away from the light source.

3.5 TEMPERATURE
Acclimatise carpet to a room temperature above 15°C through the whole of the installation.

3.6 HANDLE AND STORE
Handle carpet on flat dollies using carpet cradles, with probes on fork lifts and without sharp bending or folding. Store carpet in flat bins with a maximum height of three rows. Keep dry. Protect from damage.

3.7 FLOOR PREPARATION
Refer to FLOORING SUBSTRATE PREPARATION. Prepare floor and check conditions required for laying to AS/NZS 2455.1, section 2.

Application

3.8 INSTALLATION, UNDERLAY
Installation to underlay manufacturer's requirements. Lay at right angles to the carpet direction.

3.9 INSTALLATION, CONVENTIONAL SYSTEM
Tape carpet joints, fix grippers to floor and install underlay and carpet to AS/NZS 2455.1, section 3. Stretch carpet tight in both width and length evenly without bowing, square with walls.

3.14 FIXING TRIMS
Fix binder bars, carpet to carpet bars, and trims to all junctions with other materials and to carpet edges, to the carpet manufacturer's requirements. Ensure that junctions with other materials are neatly formed, with bars and trim securely fastened to the substrate, 20 mm from each end and at a maximum of 100 mm centres.

Completion

3.15 REPLACE
Replace damaged or marked elements.

3.16 LEAVE
Vacuum the finished carpet. Leave surfaces free of adhesive, dirt and debris, and to the standard required by following procedures.

3.17 REMOVE
Remove debris, unused materials and elements from the site.

3.18 PROTECT
Protect completed work from damage for the period between completion of laying and completion of the contract works.

6711 PAINTING

1. GENERAL

This section deals with the preparation of unpainted and pre-painted surfaces, and the application of decorative and protective paint coatings, including sealers, stains and clear finishes.

Related work

1.1 RELATED SECTIONS

Refer to the PROTECTIVE COATINGS - STEELWORK section for protective and finishing coating to structural steelwork.

Documents

1.2 DOCUMENTS REFERRED TO

Documents referred to in this section are:

AS/NZS 2312	Guide to the protection of structural steel against exterior atmospheric corrosion by the use of protective coatings
Health and Safety in Employment Act 1992	
OSH	Guidelines for the provision of facilities and general safety in the construction industry
OSH	Guidelines for the management of lead-based paint
MPNZA	Specification manual
MPNZA	Painters hazard handbook

Documents listed above and cited in the clauses that follow are part of this specification. However, this specification takes precedence in the event of it being at variance with the cited document.

1.6 QUALIFICATIONS

Painters to be experienced competent workers, familiar with the materials and the techniques specified.

1.7 HEALTH AND SAFETY

Refer to the requirements of the Health and Safety in Employment Act and OSH: Guidelines for the provision of facilities and general safety in the construction industry. If the elimination or isolation of potential hazards is not possible then minimise hazards in this work on site by using the proper equipment and techniques as required in the MPNZA Painters hazard handbook. Supply protective clothing and equipment. Inform employees and others on site of the hazards and put in place procedures for dealing with emergencies.

Refer to OSH: Guidelines for the management of lead-based paint for the required procedures and precautions when:

- treating/removing lead-based paint
- burning off paint
- sanding off paint
- using solvent based paint removers.

1.8 MATERIAL SAFETY DATA SHEET

Obtain from each paint manufacturer the material safety sheet for each product used. Keep sheets on site and comply with the required safety procedures.

Warranties

1.9 WARRANTY

Warrant this work under normal environmental and use conditions against failure.
Warranty period: 3 years

Refer to the PRELIMINARIES AND GENERAL section for the required form of warranty agreement and details of when completed warranty must be submitted.

Performance

1.10 MANUFACTURERS INSPECTION
Allow the paint manufacturers to inspect the work in progress and to take samples of their products from site if requested.

1.11 INSPECTION OF WORK
Inspection of the whole of the work at each of the stages scheduled may be made. Agree a programme that will facilitate such inspection, including notification when each part and stage of the work is ready for inspection.

2. PRODUCTS

Materials

2.1 PAINT TYPES
To the manufacturer's standards for exterior and interior solvent-borne and water-borne:
- paints
- undercoats
- wood and metal primers
- sealers
- stains and clear coatings.

2.2 THINNERS AND ADDITIVES
Only use thinners or additives within the stated limits for the specific situations they allow.

Accessories

2.3 FILLERS
Fillers, stopping, paint strippers, cleaning agents, etching solutions, mould inhibitors, rust inhibitors, knotting and other commodities used for the surface preparation, as required by the manufacturer of the specified coating.

3. EXECUTION

Conditions

3.1 EXECUTION
To conform with trade practice, including those methods, practices and techniques contained in the MPNZA Specification manual.

3.2 PREPARE
Prepare surfaces to the coating manufacturer's requirements.

3.3 USE
Use paint strippers, cleaning agents, etching solutions, mould inhibitors, rust inhibitors, size, stopping, knotting and fillers to the coating manufacturer's requirements.

3.4 COATED SURFACES
Ensure that substrate surfaces are true to line and face and with the preparation to achieve the specified finish.

3.5 PRE-PRIMED SURFACES
Sand down any breakdown or damage of the primer to a sound surface and immediately re-prime.

3.6 BRUSH DOWN
Brush down surfaces immediately before application, to remove dust, dirt and loose material.

3.7 COMPATIBILITY
Check that materials are as required by the paint manufacturers for the particular surface and conditions of exposure, and that they are compatible with each other. Use paint from the same manufacturer for each paint system. If not compatible, obtain instructions before proceeding.

3.8 TREATED SURFACES
Check that surfaces that have been treated with preservatives or fire retardants are compatible with the coating material. If not compatible, obtain instructions before proceeding.

3.9 ANCILLARY SURFACES
The coatings listed in schedules and elsewhere are of necessity simplified. Coat ancillary exposed surfaces to match similar or adjacent materials or areas, except where a fair-faced natural finish is required or items are completely prefinished. In cases of doubt obtain instructions before proceeding.

3.10 HARDWARE
Do not paint hinges or hardware that cannot be removed. Carefully remove the following hardware, fixtures and fittings before commencing work. Set aside where they cannot be damaged or misplaced and replace on completion. Refer to 4. SELECTIONS for hardware, fixtures and fittings for removal.

3.11 PROTECTION
Use dropsheets, coverings and masking necessary to protect adjoining fixtures, fittings and spaces from paint drops, spots, spray and damage.

Application - preparing unpainted timber and wood based products

3.12 MOISTURE CONTENT
Ensure moisture content at the time of application is near to the equilibrium moisture content pertaining to the particular locality in which the timber is used, without any excessive moisture content gradient between core and surface.

3.13 PREPARING DRESSED TIMBER
Ensure dressed timber is smooth, free from raised or woolly grain, planing burrs or other machining defects. Slightly round or ease sharp edges to ensure they can be properly coated. Sand timber to bring up to a smooth finish along the direction of the grain.

3.14 PREPARING ROUGH SAWN TIMBER
Thoroughly brush along the direction of the grain to remove dust and dirt.

3.15 PREPARING DAMAGE AND DEFECTS
Scrape clean loose or soft material holes, depressions, resin or gum pockets, knot holes, surface splits, checks, or any localised decay. Apply primer and/or sealer specified and fill these areas with linseed oil putty or other appropriate filler.

3.16 FIXINGS
Take timber fixings below the painted or clear finished surface. Leave corrosion resistant timber fixings flush with clear finished surfaces.

3.17 CLEANING
Remove resin, grease and oil by wiping down with mineral turpentine or scraping. Remove sanding dust.

Application - preparing unpainted linings

3.26 PREPARING FIBROUS PLASTER
Check for and remove release agents and other contaminants by washing with clean water or solvent and allow to dry. Fill cracks and surface imperfections with patching plaster and lightly sand smooth. Remove dust.

3.27 PREPARING PLASTERBOARD
Check that joints are prepared to a smooth level surface finish. Fill cracks and surface imperfections with the sheet manufacturer's required stopping compound and lightly sand smooth. Remove dust.

Application - preparing painted surfaces generally

3.30 MOULD
Sterilise surface mould by washing or sponging the whole surface with a one part sodium hypochlorite household bleach to three parts clean water solution. Allow bleach to act for 30 minutes and wash off with clean water. Wash cloths and sponges regularly in clean water. Treat with anti-mould solution to the treatment manufacturer's requirements.

3.31 GAP FILLING
Fill cracks, holes, indented and damaged surfaces with putty, plaster filler, wood filler, or plastic wood, as appropriate and in accordance with the paint manufacturer's requirements. Allow to dry or set before sanding back level with the surface. Prime coat or seal the timber before using putty. Wet cement or gypsum base plasters before applying filler. Use only Portland cement base types, or water-insoluble organic-based gap fillers in exterior or wet areas.

Application - before applying final coatings

3.38 OFF-SITE WORK
Carry out off-site preparation and coating under cover, in a suitable environment and with adequate lighting. Store items both before and after coating in a clean, dry area, protected from the weather and mechanical damage, properly stacked and spaced to permit air circulation and to prevent sticking of surfaces.

3.39 PRIMING JOINERY
Before priming preservative treated timber ensure that any cut surfaces have been retreated. Liberally coat end grain, allow to soak in and then recoat. Ensure LOSP. treated joinery has dried sufficiently to lose odour.

3.40 CONCEALED JOINERY SURFACES
Apply off-site coatings to all surfaces including those which will be concealed when incorporated into the building.

3.41 CONCEALED METAL SURFACES
Apply primer to suit the coating system to all metal surfaces which will be concealed when incorporated into the building.

3.42 EXTERNAL DOORS
Prime or seal and paint bottom edges of external doors before hanging.

3.43 BEAD GLAZING
Before glazing apply the first two coats, or the primer and one undercoat, to rebates of stained, varnished or painted joinery and beads.

3.44 PUTTY GLAZING
Allow putty to set for 7 days. Within a further 14 days seal with a solvent based primer. Ensure that the putty is fully protected by the coating system as soon as it is sufficiently hard.

Application - generally

3.45 PAINTING GENERALLY
Comply with the paint manufacturer's requirements and any additional requirements in this specification.

3.46 MIXING
Thoroughly mix paints. Lift any settled pigment and ensure the paint is homogenous.

3.47 ENVIRONMENT

Paint exterior surfaces only in favourable weather conditions:

- warm dry days without frost or heavy dews
- avoid painting in direct sunlight any surfaces that absorb heat excessively
- as far as possible apply paint in the temperature range 15°C to 25°C
- do not paint If temperatures fall outside the range of 10°C and 35°C unless paints with the necessary temperature tolerance have been specified
- do not apply solvent borne paint if moisture is present on the surface

3.48 SEQUENCE OF OPERATIONS

Painting work to generally follow the following sequences:

- complete surface preparation before commencing painting
- apply paint in the specified sequence using the specified paint
- allow full drying time between coats to the paint manufacturer's requirements
- do not expose primers, undercoats and intermediate coats beyond a few days before applying the next coat
- finish broad areas before painting trim
- ensure batch numbers of tins are matched for whole areas
- internally, paint ceilings before walls and walls before joinery, trim and other items

3.49 PAINT APPLICATIONS

Select brush, roller, or pad and apply paint to the requirements of the paint manufacturer and to obtain a smooth even coating of correct thickness, uniform gloss and colour.

3.50 DRYING TIME

Before handling or applying the next coat of paint, give each coat the full drying time as required by the paint manufacturer. Ensure that surfaces are dry and that condensation does not occur before the paint reaches surface-dry condition.

3.51 LIGHTLY SAND

Lightly sand primers, sealers, undercoats and intermediate coats to remove dust pick-up, protruding fibres and coarse particles. Remove dust immediately before applying the next coat.

3.52 DEFECTIVE WORK

Correct defective work immediately and re-coat as required, following precisely the paint system specified.

3.53 EACH COAT

Each coat of paint and the completed paint system to have the following qualities and properties:

- uniform finish, colour, texture, sheen and hiding power
- the specified number of coats applied
- no blemishes such as runs, sags, crinkling, fat edges, entrained paint skins, hairs, dust, bare or starved patches, cracks, brush marks, ladder marks and blistering
- proper covering of corners, crannies, thin edges, cracks, end grain and other difficult places of application

Completion

3.54 CLEAN

Clean adjoining surfaces, glass and fittings of any paint contamination. Clean off glass indicators at completion of the building works. Clean glass inside and out to a shining finish.

3.55 LEAVE

Leave the whole of this work uniform in gloss and colour, of correct thickness, free from painting defects, clean and unmarked and to the standard required by following procedures.

3.56 REMOVE

Remove dropsheets, coverings and masking to leave surrounding surfaces and areas clean, tidy and undamaged. Remove debris, unused materials and elements from the site.

3.57 REPLACE HARDWARE

Replace hardware without damage to it or the adjoining surface. Leave properly fitted and in working order.

7123 HOT AND COLD WATER SYSTEM

1. GENERAL

This section relates to piped water supply systems from the network utility supply authority water main to designated points and appliances, the installation of hot water heating appliances, distributing piped hot water to other appliances, and the installation of valves.

Related work

1.1 RELATED SECTIONS

Refer to SANITARY FIXTURES, TAPWARE AND ACCESSORIES for sanitary fixtures and tapware selections.

Documents

1.2 DOCUMENTS REFERRED TO

Documents referred to in this section are:

NZBC B2/AS1	Durability
NZBC G12/VM1	Water supplies
NZBC G12/AS1	Water supplies
NZBC H1/AS1	Energy Efficiency
AS 2492	Cross Linked Polyethylene (PE-X) pipe for hot and cold water applications
AS/NZS 2537	Mechanical joining fittings for use with cross-linked Polyethylene (PE-X) fittings for hot and cold water applications
AS/NZS 2642.2	Polybutylene pipe fittings - Polybutylene (PB) pipe for hot and cold water applications
AS/NZS 2642.3	Polybutylene pipe fittings - Mechanical jointing fittings for use with polybutylene (PB) pipes for hot and cold water applications
AS/NZS 4130	Polyethylene (PE) pipes for pressure applications
NZS 3501	Specification for copper tubes for water, gas and sanitation
NZS 4305	Energy efficiency domestic type hot water systems

Documents listed above and cited in the clauses that follow are part of this specification. However this specification takes precedence in the event of it being at variance with the cited document.

Requirements

1.4 QUALIFICATIONS

Plumbers to be experienced competent workers, familiar with the materials and the techniques specified. Carry out all work under the direct supervision of a plumber registered under the Plumbers, Gasfitters and Drainlayers Act 1976.

Warranties

1.7 WARRANTY

Warrant this work under normal environmental and use conditions against failure of materials and execution.
Warranty period: 2 years

Refer to the general section for the required form of WARRANTY AGREEMENT and details of when completed warranty must be submitted.

Performance

1.8 TESTING

Confirm the timing before carrying out any tests. Supply potable water and the apparatus needed.

Slowly fill service pipes with water to exclude air. Apply test pressure of a 90 metre head or a maximum working pressure plus 50%, whichever is the greater. Ensure there is no measurable loss of pressure for a minimum of 30 minutes. Slowly fill distribution pipes with water to exclude air. Ensure that with draw-off taps closed the system must remain water-tight. Ensure that mixers and other fittings that have pressure limits are protected during testing.

2. PRODUCTS

Materials

2.1 COPPER PIPE
To NZS 3501 complete with copper-alloy compression fittings or crox type joints and seal ring compression joints complete with fittings and accessories brand matched to the pipe manufacturer's requirements with durability to NZBC B2/AS1 Durability, Table 1 and NZBC G12/AS1 Water supplies Table 1.

2.2 UPVC PIPE
Complete with fittings and accessories brand matched to the pipe manufacturer's requirements with durability to NZBC B2/AS1 Durability, Table 1 and NZBC G12/AS1 Water supplies Table 1.

2.3 POLYBUTYLENE PIPE
Polybutylene tubing to AS/NZS 2642.1, AS/NZS 2642.2 and AS/NZS 2642.3 complete with fittings and accessories brand-matched with durability to NZBC B2/AS1 Durability, table 1 and NZBC G12/AS1 Water supplies table1.

2.7 WATER METER
To the requirements of the network utility operator.

Materials - hot water heating appliances

2.16 GAS HOT WATER HEATER, CONTINUOUS FLOW TYPE
Continuous flow unit with an integral gas burner and flue to NZS 4305.

Components

2.17 INSULATION
Pre-formed pipe sections complete with bends and fittings, with fixing tape to the manufacturer's requirements and to NZBC H1/AS1.

2.18 PROTECTIVE TAPE
Plasticised PVC tape system with primer, mastic fixing and outer coating.

3. EXECUTION

Conditions

3.1 HANDLE AND STORE
Handle and store pipes, fittings and accessories to avoid damage. Store on site, under cover on a clean level area, stacked to eliminate movement and away from work in progress.

Store tapware in a shelved, dry and securely locked area. Retain tapware in the manufacturer's original packaging, complete with all fixings and installation instructions. Label each unit separately with its space/fixture number to match.

3.2 CORE HOLES AND SLEEVES
Review location and fit core holes and sleeves as needed throughout the structure in conjunction with the boxing, reinforcing and placing of concrete. Strip core holes and make good after installation of pipework.

3.3 CONCEAL
Conceal pipework within the fabric of the building unless detailed otherwise. Satin finish chrome plate exposed work, complete with matching ferrule at the surface penetration.

3.4 CORROSION
Separate all metals subject to electrolytic action from each other and from treated timber, concrete and other lime substances by space, painting of surfaces, taping, or separator strips.

3.5 THERMAL MOVEMENT
Accommodate movement in pipes resulting from temperature change by the layout of the pipe runs, by expansion joints and by sleeving through penetrations.

3.6 PIPE SIZE
Flow rates to each outlet to be no less than those given in NZBC G12/VM1 or G12/AS1: Water supplies, table 3, Acceptable flow rates to sanitary fixtures. Pipe size as determined in table 4, Tempering valve and nominal pipe diameters.

Application - jointing

3.7 JOINTING COPPER PIPE
Braze pipe, fit alloy compression fittings, crox type joints and seal ring compression joints to NZBC G12/AS1: Water supplies.

3.8 JOINTING UPVC PIPE
Solvent welded joints using spigots and sockets, flanged joints and seal ring compression joints to NZBC G12/AS1: Water supplies.

3.9 JOINTING POLYBUTYLENE PIPE
Aluminium clamped, seal ring compression or push fit "O" ring seal jointing to pipe system manufacturer's requirements.

Application – pipework installation

3.12 WATER SUPPLY CONNECTION
Arrange with the network utility operator for a connection to the water main and from there through a water meter and gate valve. Provide back flow prevention to NZBC G12/AS1: Water supplies.

3.13 POTABLE WATER SUPPLY PIPEWORK INSTALLATION
From connection point, run pipes complete with all fittings, support and fixing, joins and install to manufacturers specifications. Size the pipes and branches in straight runs to deliver the acceptable flow rate to NZBC G12/VM1 or G12/AS1: Water supplies, table 3, Acceptable flow rates to sanitary fixtures at each outlet. Allow for the expected concurrent use of adjoining fixtures and size the piping layout to eliminate loss of pressure at any point by simultaneous draw-off. Pipework support spacing to be firmly fixed and buffered to eliminate noise and hammer, with preformed tee-connection take-offs and branches, with machine made 3 diameter bends, complete with necessary valves and fittings. Conceal pipework and pressure test before the wall linings are fixed.

3.14 HOT WATER PIPEWORK
Use a take-off spigot to give separate branches to each fitting, lay out pipes with support spacing to NZBC G12/VM1 or G12/AS1: Water supplies, table 7 Water supply pipework support spacing. Fix firmly and buffer to eliminate noise and hammer, with preformed tee-connection take-offs and branches, and preformed 3 diameter bends, complete with all necessary valves and fittings.

Lag all pipes with rigid insulation to the manufacturer's requirements and G12/VM1 or G12/AS1: Water supplies.

Pressure Test Hot & Cold water services lines to 1500 kPa before closing in. NZBC G12/AS1 Watertightness requirement.

3.15 EQUIPOTENTIAL BONDING
Earth metallic water supply pipe and metallic sanitary fixtures to NZBC G12/AS1: Water supplies: 9.0.

3.16 IN LINE FILTER
Install an in line filter immediately adjacent to the main isolating valve at the point of entry to the building, in an accessible position to allow for easy cleaning.

Application - hot water systems

3.21 GAS HOT WATER HEATER INSTALLATION, CONTINUOUS FLOW TYPE
Install complete with the necessary fittings to the manufacturer's requirements and in accordance with NZBC G12/AS1: Water supplies, 6.10, Water heater installation. Install flue in accordance with the manufacturer's details and requirements.

Installation – valves

3.28 INSTALLING BELOW GROUND ISOLATING VALVE
Install all below ground items such as main isolating values and water metres in preformed concrete pits or approved equivalent.

3.29 INSTALLING APPLIANCE ISOLATING VALVES - CONCEALED
Install isolating valves for appliances in accessible positions. Locate in adjacent cupboards and position to allow for easy connection and operation.

Completion

3.30 LABEL
Label all pipework with permanent adhesive markers at 3 metre minimum intervals.

3.31 CLEAN IN LINE FILTER
Clean all in line filters on completion of works.

3.32 REPLACE
Replace damaged or marked elements.

3.33 LEAVE
Leave work to the standard required by following procedures.

3.34 REMOVE
Remove debris, unused materials and elements from the site.

7141 SANITARY PLUMBING

1. GENERAL

This section relates to above ground gravity flow sanitary plumbing.

Related work

1.1 RELATED SECTIONS

Refer to SANITARY FIXTURES, TAPWARE AND ACCESSORIES for sanitary fixtures.
Refer to HOT AND COLD WATER SYSTEM for potable water systems.

Documents

1.2 DOCUMENTS REFERRED TO

Documents referred to in this section are:

NZBC G12/AS1	Water supplies
NZBC G13/AS1	Foul water sanitary plumbing
AS 2887	Plastic waste fittings
AS/NZS 1260	PVC pipes and fittings for drain, waste and vent applications
AS/NZS 2032	Installation of PVC pipe systems
BS 1224	Electroplated coatings of nickel and chromium

Plumbers, Gasfitters and Drainlayers Act 1976

Documents listed above and cited in the clauses that follow are part of this specification. However, this specification takes precedence in the event of it being at variance with the cited document.

Requirements

1.4 QUALIFICATIONS

Plumbers to be experienced competent workers, familiar with the materials and the techniques specified. Carry out all work under the direct supervision of a plumber registered under the Plumbers, Gasfitters and Drainlayers Act 1976.

1.5 PIPEWORK LAYOUTS

~

1.6 INFORMATION FOR MAINTENANCE MANUAL

Supply maintenance manual information to the requirements set out in PRELIMINARIES AND GENERAL.

Performance

1.7 TESTING

Confirm timing before carrying out any tests. Supply potable water and apparatus needed. Seal openings below the section being tested and slowly raise the water level to a minimum of 3 metres above the highest point of the section. Do not exceed 6 metres of head above the lowest point. Carry out and record a visual inspection that each joint showed no evidence of leaks.

2. PRODUCTS

Materials

2.1 COPPER PIPES AND TRAPS

Pipes complete with copper-alloy compression fittings and/or crox type joints and seal ring compression joints. Traps complete with screwed access ports. Exposed traps and wastes, complete with matching ferrules at penetration location, satin chrome plated to BS 1224.

2.2 uPVC WASTE PIPE
To AS/NZS 1260, complete with fittings and accessories to the pipe manufacturer's requirements, all brand matched.

2.3 uPVC VENT PIPE
To AS/NZS 1260, complete with fittings and accessories to the pipe manufacturer's requirements and all brand matched.

2.4 PLASTIC TRAPS
To AS 2887.

Components

2.5 PROTECTIVE TAPE
Plasticised PVC tape system with primer, mastic fixing and outer coating.

3. EXECUTION

Conditions

3.1 HANDLE AND STORE
Handle and store pipes, fittings and accessories to avoid damage. Store on site under cover on a clean level area, stacked to eliminate movement and away from work in progress.

3.2 SETTING OUT
Set out location of all stacks, discharge pipes, fittings and vent pipes and the completeness of their discharge into the drainage system.

3.3 CORE HOLES AND SLEEVES
Fit core holes and sleeves as needed throughout the structure in conjunction with the boxing, reinforcing and placing of concrete. Sleeve diameter to be 25 mm larger than outside diameter of pipe accommodated. Strip core holes and make good after installation of pipework.

3.4 PIPE ACCESS
Fit and fix stacks, wastes and pipes in ducts independent of all other services so they are easily replaceable for their full length. Wrap or tape pipes buried in concrete.

3.5 FITTINGS ACCESS
Fit and fix traps and wastes to enable access for cleaning and for maintaining the total system.

3.6 CONFIRM LOCATIONS
Unless the location and height are clearly delineated on the drawings, confirm installation height and plan locations of sanitary fittings before commencing the piping installation.

3.7 TRAPS AND WASTES
Conceal traps and wastes in the fabric of the building unless detailed otherwise. Fit and fix satin chrome plated exposed pipes, traps and wastes unless detailed otherwise.

3.8 CORROSION
Separate metals subject to electrolytic action from each other and from treated timber, concrete and other lime substances by space, painting of surfaces, taping, or separator strips.

Application - jointing

3.9 JOINTING COPPER PIPE
Braze pipe, fit alloy compression fittings, crox type joints and seal ring compression joints to NZBC G12/AS1: Water supplies.

3.10 JOINTING uPVC PIPE
Prime and solvent weld joints using spigots and sockets, flanged joints and seal ring compression joints to AS/NZS 2032.

Application - fixing

3.11 THERMAL MOVEMENT
Accommodate longitudinal movement in pipes resulting from temperature changes. Incorporate expansion joints in copper and uPVC pipes. Install PVC pipes to AS/NZS 2032. Take particular care to allow for movement at horizontal take-off locations from stacks.

3.12 TRAPS AND FIXTURE DISCHARGE PIPES
Size traps and pipes as required for each fixture or appliance. Establish the developed length of waste pipes. Vent and allow access for cleaning as required. Follow the most direct line with the least number of bends to NZBC G13/AS1: Foul water sanitary plumbing, table 4, Discharge unit loading for stacks and graded discharge pipes and table 7, Distance between supports.

3.13 DISCHARGE STACKS AND VENTS
Size stacks and vents to NZBC G13/AS1: Foul water sanitary plumbing, table 2, Fixture discharge pipe sizes and discharge units and table 6, Vent pipe sizes. Extend up past the highest branch to form a discharge stack vent terminating to NZBC G13/AS1: Foul water sanitary plumbing, figure 12 and finishing at the base with a 45 degree bend. Support system to NZBC G13/AS1: Foul water sanitary plumbing, table 7, Distances between supports.

Completion

3.20 REPLACE
Replace damaged or marked elements.

3.21 LEAVE
Leave the whole of this work free of blemishes, undamaged and to the standard of finish required for following procedures.

3.22 REMOVE
Remove debris, unused materials and elements from site.

7400 DRAINAGE GENERAL

1. GENERAL

This section relates to the supply and laying of gravity subsoil, surface water and foul water drains.

Documents

1.2 DOCUMENTS REFERRED TO

Documents referred to in the above sections are:

NZBC E1/AS1	Surface water, 3.0 Drainage system materials and construction
NZBC E2/AS1	External moisture, 12.3 Drainage
NZBC G13/AS2	Foul water drainage
AS/NZS 1254	PVC Pipes and fittings for Stormwater and Surface Water applications
AS/NZS 1260	PVC pipes and fittings for drain, waste and vent applications
AS/NZS 1546.1	Septic tanks
AS/NZS 2032	Installation of PVC pipe systems
AS/NZS 2033	Installation of Polyethylene pipe systems
AS/NZS 2566.1	Buried Flexible Pipelines - Structural Design
AS/NZS 2566.2	Buried Flexible Pipelines - Installation
AS/NZS 4671	Steel reinforcing materials
AS/NZS 5065	Polyethylene and polypropylene pipes and fittings for drainage and sewerage applications
NZS 3107	Precast concrete drainage and pressure pipes
NZS 3104	Specification for concrete production
NZS 4442	Welded steel pipes and fittings for water, sewage and pressure gas
OSH	Approved code of practice for safety in excavation and shafts for foundations

Plumbers, Gasfitters and Drainlayers Act 1976
Health and Safety in Employment Act 1992

Documents listed above and cited in the clauses that follow are part of this specification. However, this specification takes precedence in the event of it being at variance with the cited document.

Performance.

1.7 CHECK LOCATION

Check the location of existing on and off-site, private and public services with the network utility operator. Follow their requirements for safety and protection where laying drainage.

1.8 SITE CONDITIONS

Before starting work check on site the drainage layout, dimensions, levels and invert levels and ensure that line, level, falls and cover are correct.

1.9 ADJOINING PROPERTIES

Take precautions to protect adjoining property from damage or risk of damage arising from excavation and drainage work.

1.10 SAFETY

Carry out all safety procedures as required by the OSH publication: Approved code of practice for safety in excavation and shafts for foundations and the Health and Safety in Employment Act 1992, regarding notifiable work and timbering. Prevent material rolling into trenches.

1.11 BLASTING

Do not blast except with the written approval of the territorial authority and the local OSH office of the Department of Labour. If permitted, carry out blasting with experienced workers under a blaster holding a certificate of competence issued by OSH.

1.12 TESTS
Using the method agreed with the territorial authority inspector, test and inspect pipelines before backfilling to ensure required acceptance levels are achieved. Test again after backfilling to confirm acceptance levels and for final acceptance of the works.

1.13 RECORDS
Records to be kept of all tests.

At time of full water Test inspection, provide an accurate as laid drainage plan to Council Offficer.

2. PRODUCTS

Materials

2.1 REINFORCING STEEL
Plain round and/or deformed steel bars, Grade 300 to AS/NZS 4671.

2.2 CONCRETE PIPES
Precast concrete to NZS 3107.

2.3 STEEL PIPES AND FITTINGS
Welded steel pipes and fittings to NZS 4442.

2.4 UPVC PIPES AND FITTINGS
Unplasticised PVC pipe and fittings to AS/NZS 1260.

2.5 POLYETHYLENE PIPES AND FITTINGS
Polyethylene pipe and fittings to AS/NZS 5065.

2.6 GULLY TRAPS
To NZBC G13/AS2: Foul water drainage, 3.3 Gully traps, complete with grating.

2.8 INSPECTION CHAMBERS
Circular precast concrete or plastic to NZBC G13/AS2: Foul water drainage, 5.7 Access points, complete with cast iron lid and frame. All joints watertight (base/pipes, base/riser, riser/riser, riser/lid, lid throat and throat/frame). Use epoxy mortar joints in concrete chambers. Use ring seals in plastic chambers.

Accessories

2.11 BEDDING, SURROUND AND FILLING MATERIALS

Granular:	Clean gravel or crushed stone or a blend of these. Particle size from minimum 7 mm to maximum 20 mm.
Selected:	Fine grain soil or granular material suitable for bedding and excluding topsoil, organic matter and rubbish.
Ordinary:	Top soil or other excavated materials excluding organic matter and rubbish.

2.12 CONCRETE
To NZS 3104.

Prescribed mix 17.5 MPa:	For in situ bases, anchors and pipe surrounds.
Prescribed mix 14 MPa:	For bedding only.

3. EXECUTION

Application

3.2 EXCAVATION
Open not more than 120 metres of trench at any one time. Excavated trench to a minimum width of pipe diameter plus 300 mm. Do not batter or cut the trench wider above the top of the pipe.

For deep excavation, trench width to be sufficient to provide safe access and to accommodate shoring to OSH requirements. Width of bottom of trench up to 300 mm above top of pipe to be pipe diameter plus 300 mm.

Maintain free of water and free of all falling material.

3.3 BEDDING
Place to NZBC G13/AS2: Foul water drainage, 5.0 Installation, figure 7, Bedding and backfilling, using compacted granular material to avoid differential settlement and to obtain longitudinal support of the pipe.

3.4 SURROUND AND BACKFILL
Place to NZBC G13/AS2: Foul water drainage, figure 7 Bedding and backfilling, using compacted granular material and compacted fill. Compact in layers not exceeding 100 mm.

3.5 SETTING OUT
Use string line, boning rod or laser equipment methods. Use surveying and levelling equipment to accurately set out design invert levels.

3.6 LAYING AND JOINTING
Lay in straight lines between changes of line or grade from the lower end of the drain with sockets pointing uphill. Set each pipe true to line and grade and each joint completed before the next pipe is laid. Install PVC Pipes to AS/NZS 2032 or AS/NZS 2566.1 and AS/NZS 2566.2. Install polyethylene Pipes to AS/NZS 2033. Cap ends of uncompleted runs each day to prevent entry of foreign matter. Test drains and backfill progressively to minimise site disruption. Concrete cap trenches to drains with less than 375 mm cover.

3.7 LAYING FOUL WATER DRAINS
Lay the drainage system from soil stacks and gully traps, including access chambers, inspection chambers, bends, junction inspections, buchan traps and vents (fresh air inlets). Discharge into the network utility operator foul water system to their requirements.

3.8 DIFFERENTIAL SETTLEMENT
Provide flexible jointing, bedding and surrounding of pipes at junctions with manholes, foundation walls and other points where differential settlement may occur.

Application - fittings

3.9 CONSTRUCT GULLY TRAPS
Set in a minimum 75 mm thick concrete with top surround 25 mm above paving and 100 mm above other surfaces, to NZBC G13/AS2: Foul water drainage, 3.3 Gully traps.

3.11 CONSTRUCT INSPECTION CHAMBERS
Construct as detailed on a poured concrete footing to NZBC G13/AS2: Foul water drainage, 5.7 Access points. Provide all necessary haunching to channels.

Application - connections

3.15 ARRANGE FOR CONNECTION TO FOUL WATER DRAIN
Make arrangements for the network utility operator to connect new pipework to existing drain.

3.16 CONNECT TO FOUL WATER DRAIN
Connect new pipework to existing drain to the requirements of the network utility operator.

3.17 LOCATE/CONNECT TO ACCESS CHAMBER
Locate and excavate to expose the existing access chamber. Break into the chamber, modify as necessary and connect new pipes to the requirements of the network utility operator.

3.18 LOCATE/CONNECT TO FOUL WATER DRAIN
Locate and excavate to expose the existing drain. Connect using a 'Y' junction to the requirements of the network utility operator.

3.19 CLEAN
Clean and flush out the whole installation. Remove silt and debris.

Completion

3.21 REPLACE
Replace damaged or marked elements.

3.22 LEAVE
Leave work to the standard required by following procedures.

3.23 REMOVE
Remove debris, unused materials and elements from the site.

7211 GAS SYSTEM

1. GENERAL

This section relates to the fabrication, installation and operation of piping systems for low pressure natural gas.

Related work

1.1 RELATED SECTIONS

Refer to GAS APPLIANCES for gas appliances

Documents

1.2 DOCUMENTS REFERRED TO

Documents referred to in this section are:

NZBC G10/AS1	Piped services (Gas)
NZBC G11/AS1	Gas as an energy source
NZS 5258	Gas distribution
NZS 5261	Gas Installation
AS/NZS 4129	Fittings for polyethylene pipes for pressure applications
AS/NZS 4130	Polyethylene(PE) pipes for pressure applications - Dimensions for series 2 pipes – gas (nominal outside diameter series)
AS/NZS 4130	Polyethylene(PE) pipes for pressure applications - Dimensions for series 3 pipes – gas (nominal inside diameter series)
AS 5601	Gas Installations
AS 4176	Polyethylene/aluminium and cross linked polyethylene/aluminium macrocomposite pipe systems for pressure applications

Electricity Regulations 1997
Gas Regulations 1993
Plumbers, Gasfitters and Drainlayers Act 1976

Documents listed above and cited in the clauses that follow are part of this specification. However, this specification takes precedence in the event of it being at variance with the cited document.

1.3 MANUFACTURER'S DOCUMENTS

Manufacturer's and supplier's documents relating to work in this section are:
~

Copies of the above literature are available by phoning ~.

Requirements

1.4 COMPLY

Comply with the Gas Regulations, Electricity Regulations and the network utility operator's requirements. Give notices for inspections and carry out tests as required.

1.5 PRIMARY CONNECTION

Include for the cost of this service complete with excavation and backfilling.

1.6 QUALIFICATIONS

Gasfitters to be experienced competent workers, familiar with the materials and the techniques specified and registered under the Plumbers, Gasfitters and Drainlayers Act.

Performance

1.9 PRESSURE TEST

Pressure test the system for leakage to NZS 5261 before pipework is concealed by linings.

1.10 FINAL INSPECTION AND TEST
Submit the work for inspection and test and prove to the satisfaction of the network utility operator that the installation complies with all Acts and Regulations and has been tested for leakage and proved to be sound.

1.11 CERTIFICATION CERTIFICATE
Provide a Gasfitting Certification Certificate as required by Regulation 24 of the Gas Regulations 1993 and when required provide a copy to the energy supplier.

2. PRODUCTS

Materials

2.1 PIPEWORK GENERAL
Pipework requirements to NZS 5261, NZS 5261 Table 24 - Gas Pipework, and AS 5601 Table 3.1 Consumer piping materials and duty limits.

2.2 COPPER PIPE
Complete with fittings to NZS 5261.

2.4 POLYETHYLENE PIPE
Polyethylene pipes to AS/NZS 4130 Series two, or AS/NZS 4130 Series three. Fittings to AS/NZS 4129.

2.5 ISOLATING VALVES
Manual shut-off valves to NZS 5261.

2.6 METER
Primary meter to suit design load, supply pressure and pressure drop, supplied and installed by the network utility operator.

3. EXECUTION

Conditions

3.1 GENERALLY
Carry out the whole of this work to the requirements of NZBC G10/AS1: Piped services (Gas); NZBC G11/AS1: Gas as an energy source and NZS 5261.

3.2 ARRANGE
Arrange for the network utility operator to connect their distribution system to the primary meter, to NZS 5258.

Application

3.4 INSTALL PIPING
Run the system, completely concealed, in the most suitable type of pipe for each part of the installation, bent, supported, jointed and complete with all fittings to NZS 5261. Confirm the type of pipe and its location. Label pipework to distinguish it from other services.

Completion

3.5 REPLACE
Replace damaged, cracked or marked elements.

3.6 LEAVE
Leave appliances clean and in full working order to the standard required by following procedures.

3.7 REMOVE
Remove debris, unused materials and elements from the site.

7221 GAS APPLIANCES

1. GENERAL

This section deals with the supply and installation of gas-powered appliances using low pressure natural gas.

Related work

1.1 RELATED SECTIONS

Refer to GAS SYSTEM for gas supply

Refer to HOT AND COLD WATER SYSTEM for gas water heaters

Documents

1.2 DOCUMENTS REFERRED TO

Documents referred to in this section are:

NZBC	G10/AS1	Piped services (Gas)
NZBC	G11/AS1	Gas as an energy source
NZBC	G12/AS1	Water supplies
NZS 5261	Installation of gas burning appliances and equipment	

Electricity Regulations 1997

Gas Regulations 1993

Plumbers, Gasfitters and Drainlayers Act 1976

Documents listed above and cited in the clauses that follow are part of this specification. However, this specification takes precedence in the event of it being at variance with the cited document.

Requirements

1.4 COMPLY

Comply with the Gas Regulations, Electricity Regulations and the network utility operator's requirements. Give notices for inspections and carry out tests as required.

1.5 QUALIFICATIONS

Gasfitters to be experienced competent workers, familiar with the materials and the techniques specified and registered under the Plumbers, Gasfitters and Drainlayers Act.

Performance

1.6 FINAL INSPECTION AND TEST

Submit the work for inspection and test and prove to the satisfaction of the network utility operator that the installation complies with all Acts and Regulations and has been tested for leakage and proved to be sound.

1.7 CERTIFICATION CERTIFICATE

Provide a Gasfitting Certification Certificate as required by Regulation 24 of the Gas Regulations 1993.

2. PRODUCTS

Materials

2.1 GAS APPLIANCES

Refer to SELECTIONS for product selection.

3. EXECUTION

Conditions

3.1 GENERALLY
Carry out the whole of this work to the requirements of NZBC G10/AS1: Piped services (Gas); NZBC G11/AS1: Gas as an energy source; NZBC G12/AS1: Water supplies and NZS 5261.

Application

3.2 INSTALL GAS APPLIANCES
Fit and connect gas appliances to NZS 5261, complete with isolation valves and flues as required to the appliance manufacturer's requirements.

3.3 CONNECT UP GAS HOT WATER HEATERS
Connect gas hot water heaters supplied and fitted under HOT AND COLD WATER SYSTEM or by gas fitter, to NZBC G10/AS1; G11/AS1; NZBC G12/AS1 and to NZS 5261 and the water heater manufacturer's requirements.

Completion

3.4 REPLACE
Replace damaged, cracked or marked elements.

3.5 LEAVE
Leave appliances clean and in full working order and leave work to the standard required by following procedures.

3.6 REMOVE
Remove debris, unused materials and elements from the site.

7511R RINNAI HOT WATER SYSTEMS

1. GENERAL

This section deals with the supply and installation of Rinnai gas and solar powered water heating units.

Related work

1.1 RELATED SECTIONS

Refer to HOT AND COLD WATER SYSTEM for pipe systems
Refer to GAS SYSTEM for gas supply
Refer to 7554R RINNAI SPACE HEATING SYSTEMS for space heating

Documents

1.2 DOCUMENTS REFERRED TO

Documents referred to in this section are:

NZBC G10/AS1	Piping for gas used as an energy source
AS/NZS 1596	Storage and handling of Liquefied Petroleum Gas
NZS 5261	Installation of gas burning appliances and equipment

Electricity Regulations 1997
Gas Regulations 1993
Plumbers, Gasfitters and Drainlayers Act 1976

Documents listed above and cited in the clauses that follow are part of this specification. However this specification takes precedence in the event of it being at variance with the cited document.

1.3 MANUFACTURER'S DOCUMENTS

Manufacturer's and supplier's documents relating to work in this section are:
Rinnai Operation and Installation Manual
Rinnai Specification Guide

Copies of the Operation and Installation Manuals are available at

Web:	www.rinnai.co.nz (via TradeSmart (online technical resource))
Telephone:	0800 TO RINNAI (0800 86 746 624)

Requirements

1.4 NO SUBSTITUTIONS

Substitutions are not permitted to any specified **Rinnai** products, or associated products, components or accessories.

1.5 COMPLY

Comply with the Gas Regulations, Electricity Regulations and the network utility operator's requirements. Give notices for inspections and carry out tests as required.

1.6 QUALIFICATIONS

Gasfitters to be experienced competent workers, familiar with the materials and the techniques specified and registered under the Plumbers, Gasfitters and Drainlayers Act.

1.7 INFORMATION FOR MAINTENANCE MANUAL

Supply maintenance manual information to the requirements set out in PRELIMINARIES AND GENERAL.

Warranties

1.8 WARRANTY

Warrant this work under normal environmental and use conditions against failure of materials and execution.

Period: 2/3 year warranty (dependent on appliance)

Performance

1.9 FINAL INSPECTION AND TEST
Submit the work for inspection and test and prove to the satisfaction of the network utility operator that the installation complies with all Acts and Regulations and has been tested for leakage and proved to be sound.

Testing should be at the time of completion. Confirm this timing before carrying out any tests. Test and demonstrate the system according to manufacturer's specification and to NZS 5261.

1.10 CERTIFICATE OF COMPLIANCE
Provide a Gasfitting Certificate of Compliance as required by Regulation 24 of the Gas Regulations 1993 within 7 days of completion.

2. PRODUCTS

Materials - hot water heating units

2.1 CONTINUOUS FLOW HOT WATER HEATING UNIT
Rinnai Infinity continuous flow hot water heating unit with an integral gas burner. Water temperature electronically preset by digital controllers where selected. Refer to SELECTIONS for controller type.

2.5 DIGITAL CONTROLLER(S)
Rinnai digital controller for **Rinnai Infinity** continuous flow hot water heating units. Refer to SELECTIONS for type.

Components

Matching **Rinnai** Flue system.

2.7 FROST KITS
Rinnai Infinity frost kit. Refer to SELECTIONS for type.

2.8 SECURITY BRACKET
Rinnai Infinity security bracket.

2.9 RECESSED BOX
Rinnai Infinity recessed box for housing the external Infinity unit, pipe work and power supply behind a hinged door.

2.10 PIPE COVER
Rinnai Infinity pipe cover (where a recessed box is not being used), attaches to the base of the **Rinnai Infinity** unit.

2.11 PREHEATER
Rinnai Infinity SmartStart Preheater for circulating ring main applications with **Rinnai Infinity** continuous flow hot water heating unit. Single pump system designed specifically to reduce water wasted in hot water dead legs.

2.12 MANIFOLDING
Connections for **Rinnai Infinity** units to enable them to be manifolded together. Refer to SELECTIONS for types.

3. EXECUTION

Conditions

3.1 GENERALLY
Carry out the whole of this work to the requirements of NZBC G10/AS1 and NZS 5261.

Application

3.2 INSTALL GAS APPLIANCES
Fit and connect gas appliances to NZS 5261, complete with flues as required to the appliance manufacturer's requirements.

3.3 HANDLE AND STORE
Handle and store units, cylinders, pipes, fittings and accessories to avoid damage. Store on site, under cover on a clean level area, stacked to eliminate movement and away from work in progress. Store according to manufacturer's instructions.

3.4 CONCEAL
Conceal pipework within the fabric of the building unless detailed otherwise. Satin finish chrome plate exposed work, complete with matching ferrule at the surface penetration.

3.5 CORROSION
Separate all metals subject to electrolytic action from each other and from treated timber, concrete and other lime substances by space, painting of surfaces, taping, or separator strips.

3.6 THERMAL MOVEMENT
Accommodate movement in pipes resulting from temperature change by the layout of the pipe runs, by expansion joints and by sleeving through penetrations.

3.7 PIPE SIZE
Gas fitter to check and confirm adequate pipe size, incoming mains and meter on site as a part of the installation. Pipe sizing calculation to NZS 5261.

Application - hot water systems

3.8 INSTALL CONTINUOUS HOT WATER HEATING UNIT
Install **Rinnai** Infinity continuous hot water heating unit complete with the necessary fittings to **Rinnai** requirements and to NZBC G12/AS1: Water supplies, 6.10, Water heater installation and to NZS 5261. Install flue (if applicable) to **Rinnai** details and requirements and digital controllers in location specified. Install in **Rinnai** recessed box with security bracket where specified.

Completion

3.11 REPLACE
Replace damaged or marked elements.

3.12 LEAVE
Leave work to the standard required by following procedures.

3.13 REMOVE
Remove debris, unused materials and elements from the site.

4. SELECTIONS

4.2 EXTERNAL CONTINUOUS WATER HEATING UNIT
Location: ~
Brand/Type/model: **Rinnai Infinity** External model 26L
Gas type: ~

HURUNUI DISTRICT COUNCIL
Plans and specifications APPROVED.
In accordance with the Building Act 2004, clause 49(1) and the associated Building Regulations.
Signed .....

7700 ELECTRICAL GENERAL

1. GENERAL

This section deals with general matters relating to electrical work.

Warranties

1.5 WARRANTY

Warrant the complete electrical installation under normal environmental and use conditions against failure of materials and execution.

Warranty period: 1 year

Refer to the PRELIMINARIES AND GENERAL section for the required form of warranty agreement and details of when completed warranty must be submitted.

Performance

1.6 QUALIFICATIONS

Electricians to be experienced competent workers, familiar with the materials and the techniques specified and carried out by or under the direct supervision of a holder of a practising certificate under the Electricity Regulations 1997.

1.7 COMPLY WITH REGULATIONS

Comply with the Electricity Regulations 1997 for listed and prescribed work and with the network utility operator's requirements. Apply for the service connection. Arrange and pay for the required inspections of listed work.

1.8 CERTIFICATE OF COMPLIANCE

Carry out the prescribed electrical work for the complete electrical installation, test and complete a certificate of compliance, as required by the Electricity Regulations 1997. Allow the network utility operator to view before the meter installation, listed work inspection, polarity check and livening of supply. On completion supply the certificate of compliance.

1.9 SAFETY CHECKS

Arrange for the safety check by a registered electrical inspector, or independently qualified person of the complete electrical installation and continuing safety checks required for this electrical installation and appliances under the Electricity Regulations 1997.

1.10 PRODUCER STATEMENTS

Provide a 'producer statement – design' and 'producer statement – construction' to the satisfaction of the Building Consent Authority, for the complete electrical installation.

1.11 COMPLIANCE SCHEDULES

Provide compliance schedules for the installation to the satisfaction of the territorial authority, in accordance with the New Zealand Building Code requirements for the complete electrical installation.

7741 LIGHTING

1. GENERAL

This section deals with the supply, fixing and testing of all luminaires and lamps as shown on the drawings, or otherwise specified or scheduled.

Related work

1.1 RELATED SECTIONS
Refer to ELECTRICAL GENERAL for general matters
Refer to GENERAL POWER DISTRIBUTION for power distribution
Refer to EMERGENCY EVACUATION LIGHTING for emergency lighting

Requirements

1.3 SAMPLES
Before commencing the installation supply samples for review. Refer to SELECTIONS for required samples. Only those samples that have been approved in writing may be used.

3. EXECUTION

Conditions

3.1 MATERIALS, FITTINGS AND EQUIPMENT
New, undamaged and complying with the relevant Standards, Codes and Regulations. Ensure work is electrically safe and installed to NZBC G9/VM1, ASNZS 3000 and relevant Electrical Codes of Practice.

Application

3.2 INSTALLING LUMINAIRES
Install to the luminaire manufacturer's requirements, complete with lamps. Apply seismic restraint measures to NZS 4219. Recessed luminaires installed to NZ ECP 54. Clearances from insulation and building elements to NZ ECP 54.

Completion

3.3 REPLACE DAMAGED WORK
Replace damaged, cracked or marked elements.

3.4 LEAVE CLEAN
Leave units and fittings clean and in full working order. Leave work to the standard required by following procedures.

3.5 ENSURE CORRECT OPERATION
Ensure work is operating correctly, with equipment clean and light bulbs and tubes operational.



. . . . Providing the System that matters

Thermakraft ALUBAND
BEAL Appraisal No. C403

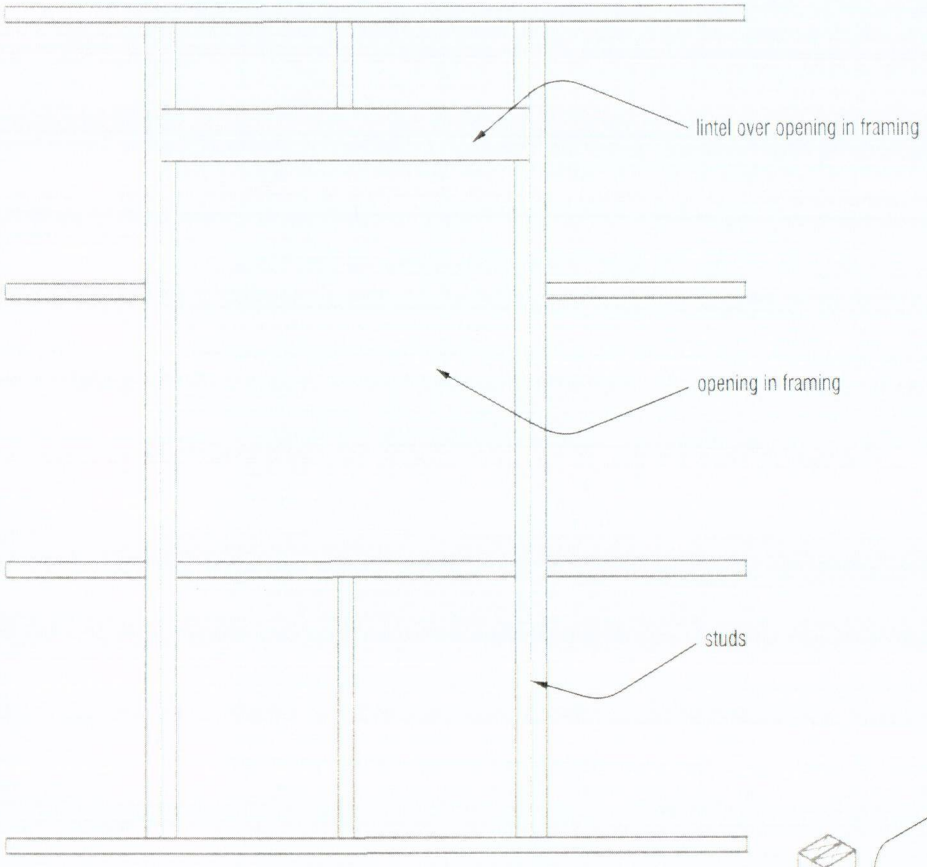

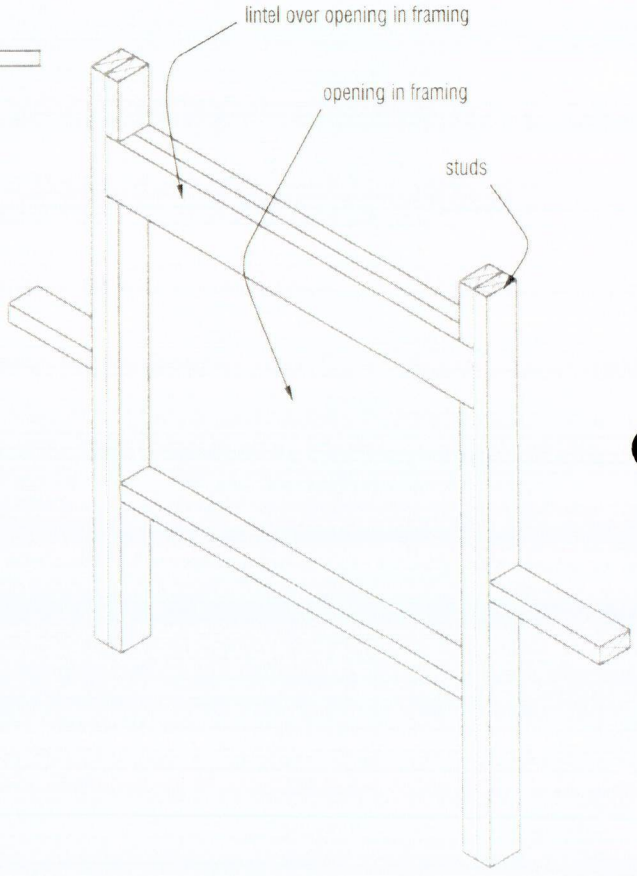

Thermakraft Industries (NZ) Ltd
11 Turin Place, Auckland
P.O. Box 58-112, Greenmount, Auckland
Ph: +64 9-273 3727 Fax: +64 9-273 3726
Free Phone 0800 806 595

DRAWING TITLE	DATE	SHEET No.
Opening in Framing	JUNE 2005	W1
DRAWN MKN	© Copyright	SCALE NTS

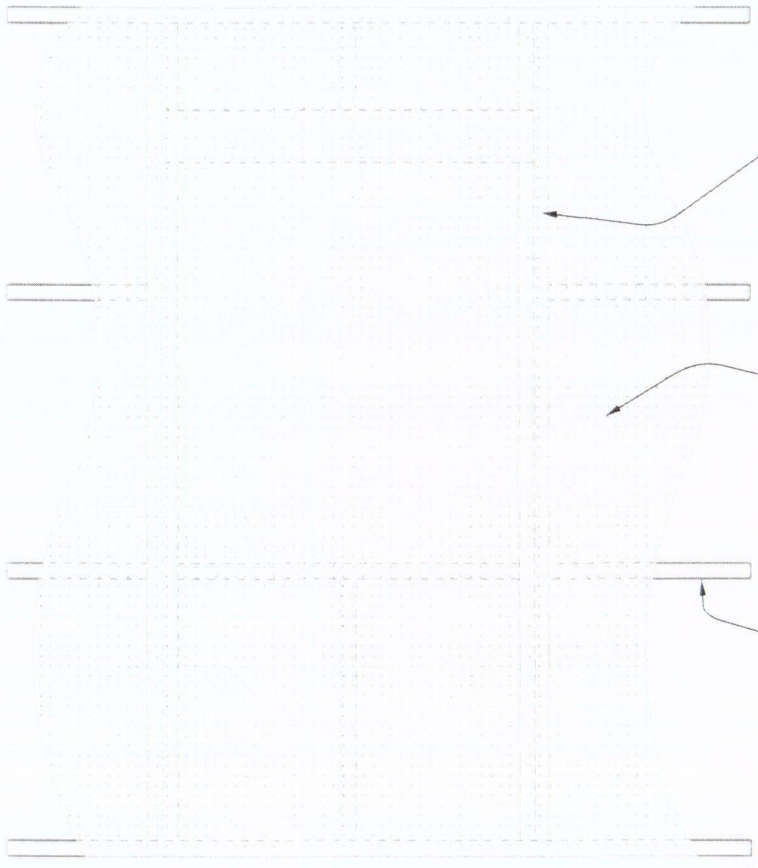

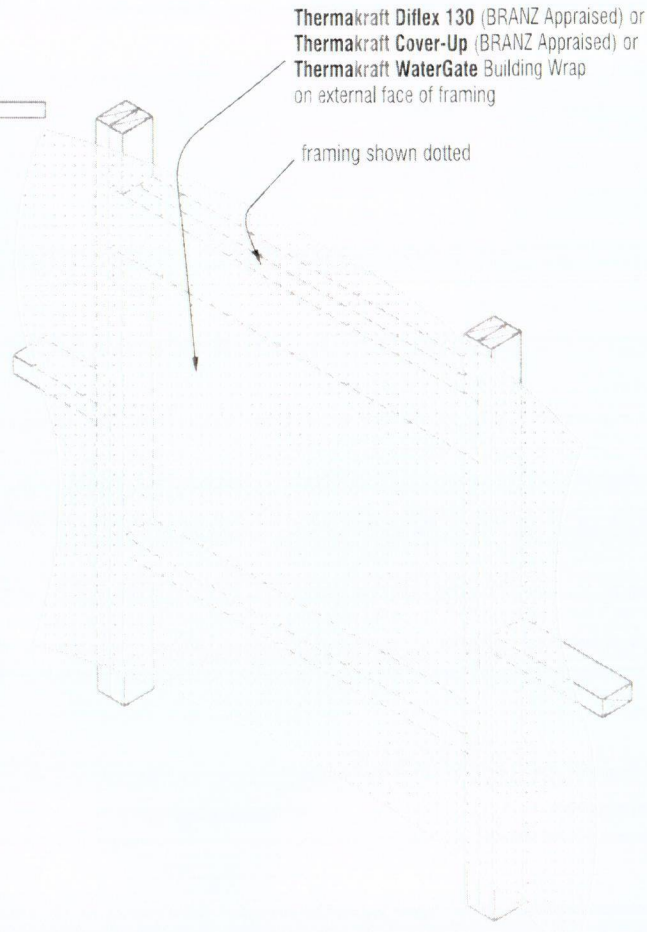

Thermakraft Industries (NZ) Ltd
11 Turin Place, Auckland
P.O. Box 58-112, Greenmount, Auckland
Ph: +64 9-273 3727 Fax: +64 9-273 3726
Free Phone 0800 806 595

DRAWING TITLE	DATE	SHEET No.
Building Wrap over Framing	JUNE 2005	**W2**
DRAWN MKN	© Copyright	SCALE NTS

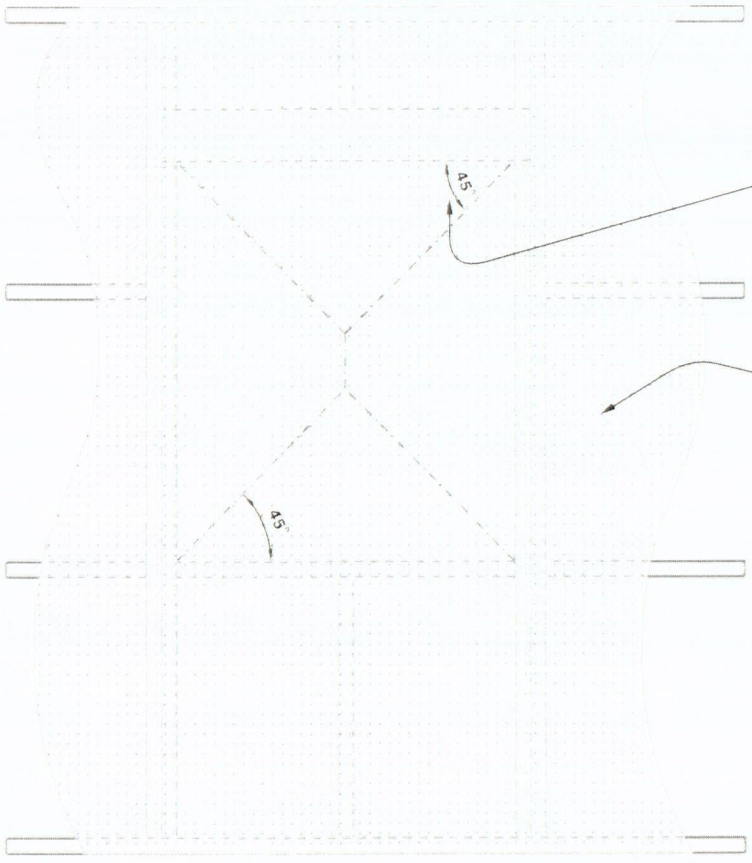

Thermakraft Diflex 130 (BRANZ Appraised) or
Thermakraft Cover-Up (BRANZ Appraised) or
Thermakraft WaterGate Building Wrap
to be cut at 45° to corners of openings

Thermakraft Diflex 130 (BRANZ Appraised) or
Thermakraft Cover-Up (BRANZ Appraised) or
Thermakraft WaterGate Building Wrap
on external face of framing

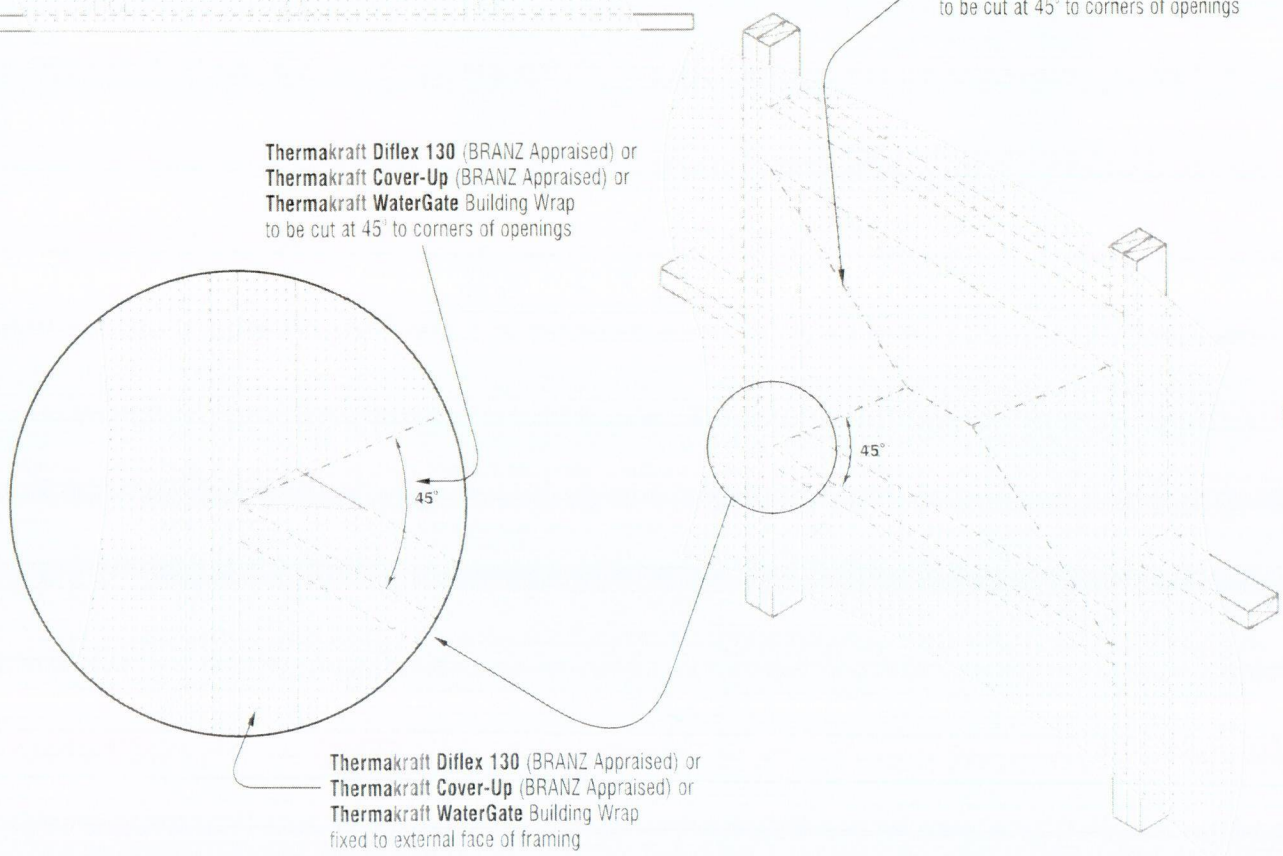

Thermakraft Diflex 130 (BRANZ Appraised) or
Thermakraft Cover-Up (BRANZ Appraised) or
Thermakraft WaterGate Building Wrap
to be cut at 45° to corners of openings

Thermakraft Diflex 130 (BRANZ Appraised) or
Thermakraft Cover-Up (BRANZ Appraised) or
Thermakraft WaterGate Building Wrap
to be cut at 45° to corners of openings

Thermakraft Diflex 130 (BRANZ Appraised) or
Thermakraft Cover-Up (BRANZ Appraised) or
Thermakraft WaterGate Building Wrap
fixed to external face of framing

Thermakraft Industries (NZ) Ltd
11 Turin Place, Auckland
P.O. Box 58-112, Greenmount, Auckland
Ph: +64 9-273 3727 Fax: +64 9-273 3726
Free Phone 0800 806 595

DRAWING TITLE	DATE	SHEET No.
Cut Building Wrap at Opening	JUNE 2005	**W3**
DRAWN MKN	© Copyright	SCALE NTS

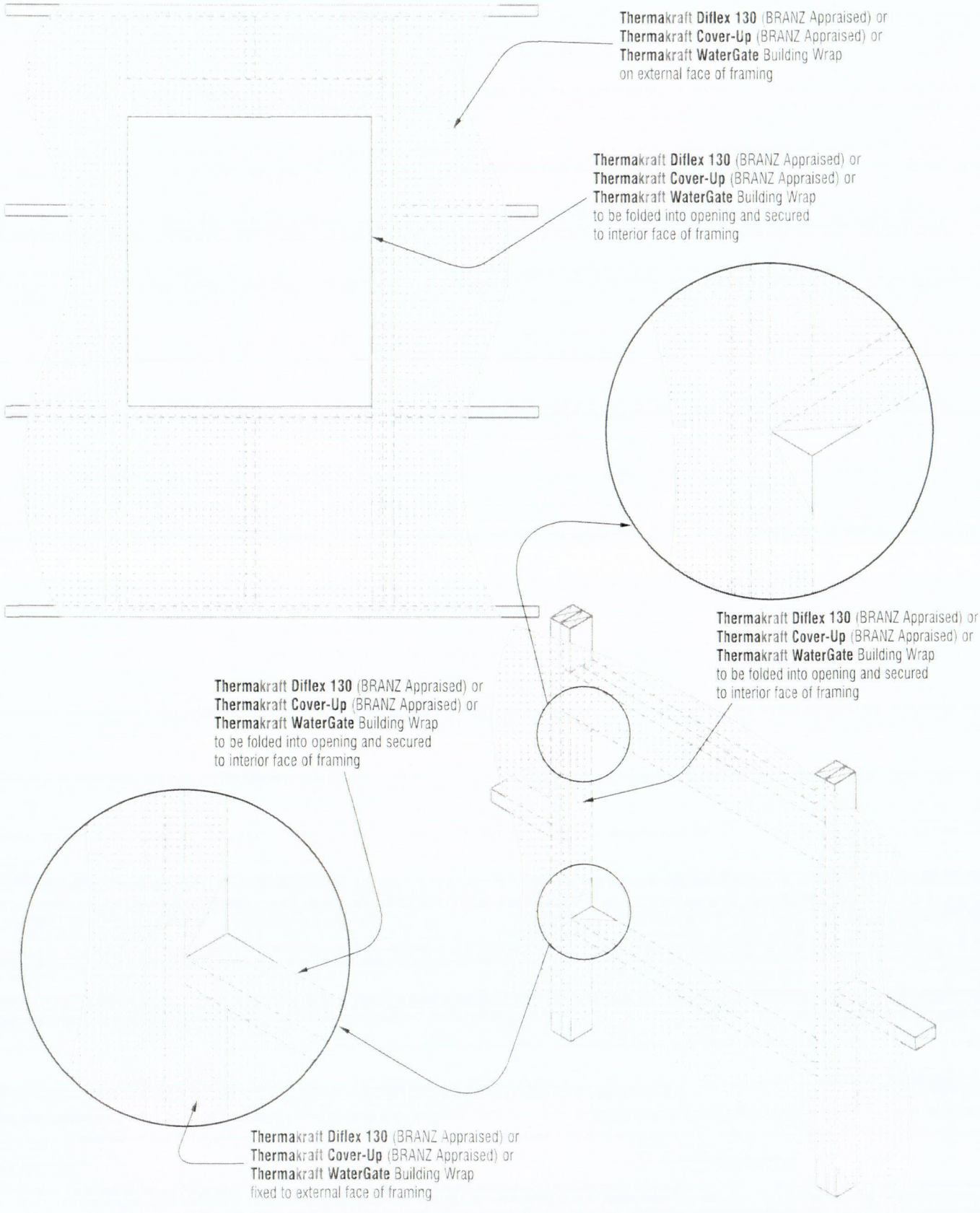

Thermakraft Industries (NZ) Ltd
11 Turin Place, Auckland
P.O. Box 58-112, Greenmount, Auckland
Ph: +64 9-273 3727 Fax: +64 9-273 3726
Free Phone 0800 806 595

DRAWING TITLE	DATE	SHEET No.
Fold Building Wrap into Opening	JUNE 2005	W4
DRAWN MKN	© Copyright	SCALE NTS

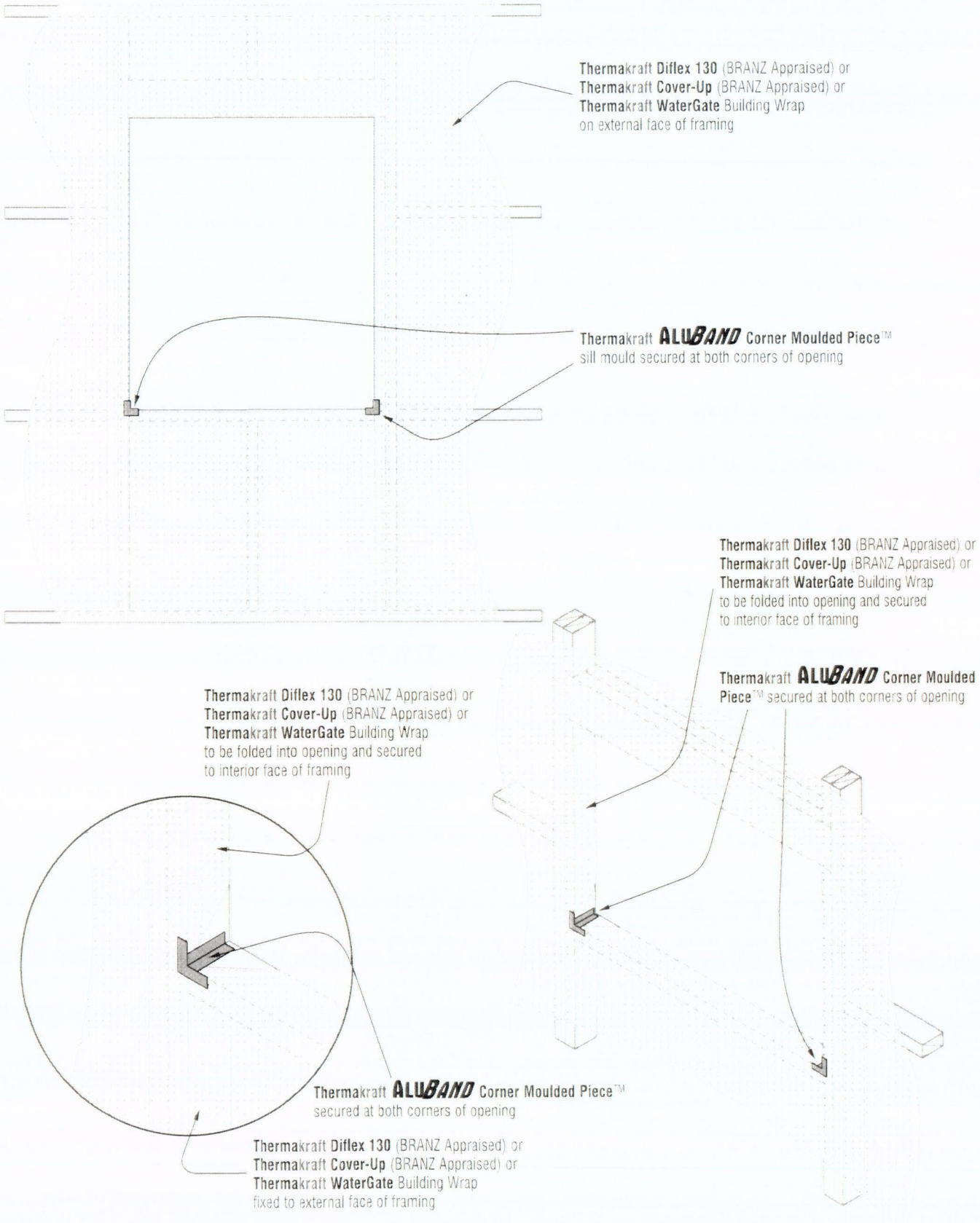

Thermakraft Industries (NZ) Ltd
11 Turin Place, Auckland
P.O. Box 58-112, Greenmount, Auckland
Ph: +64 9-273 3727 Fax: +64 9-273 3726
Free Phone 0800 806 595

DRAWING TITLE	DATE	SHEET No.
Corner Moulded Piece	JUNE 2005	**W5**
DRAWN MKN	© Copyright	SCALE NTS

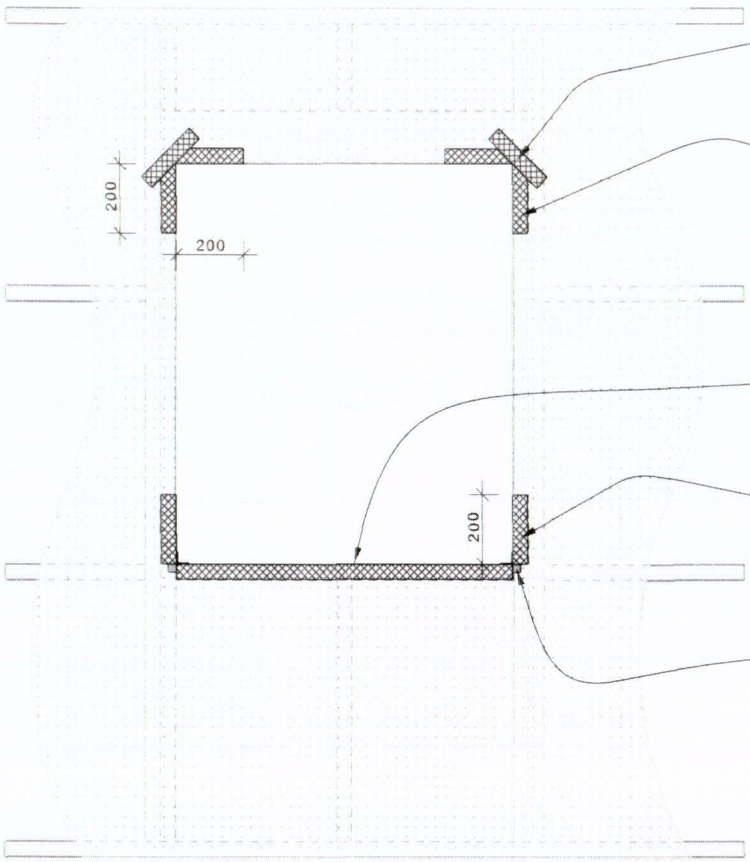

Thermakraft **ALUBAND** Window Sealing Tape
45° (100mm x 50mm) butterfly
Thermakraft **ALUBAND** Flashing Tape
3mm min. overhang at corner

Thermakraft **ALUBAND** Window Sealing Tape
to extend 200mm min. in both directions

Continuous Thermakraft **ALUBAND** Window Sealing Tape
to sill (150mm or 200mm width)

Thermakraft **ALUBAND** Window Sealing Tape
to extend 200mm min. vertically on both sides of opening

Thermakraft **ALUBAND** Window Sealing Tape secured over
Thermakraft **ALUBAND** Corner Moulded Piece™ and
Thermakraft Diflex 130 (BRANZ Appraised) or
Thermakraft Cover-Up (BRANZ Appraised) or
Thermakraft WaterGate Building Wrap

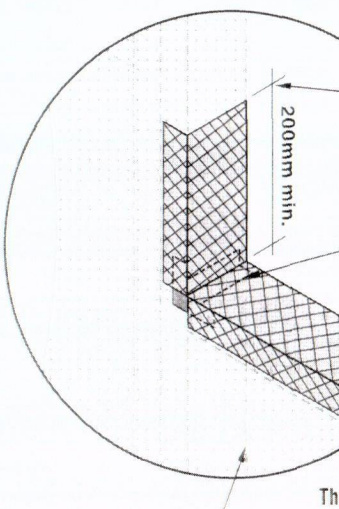

Thermakraft **ALUBAND** Window Sealing Tape to extend 200mm min. vertically on both sides of opening

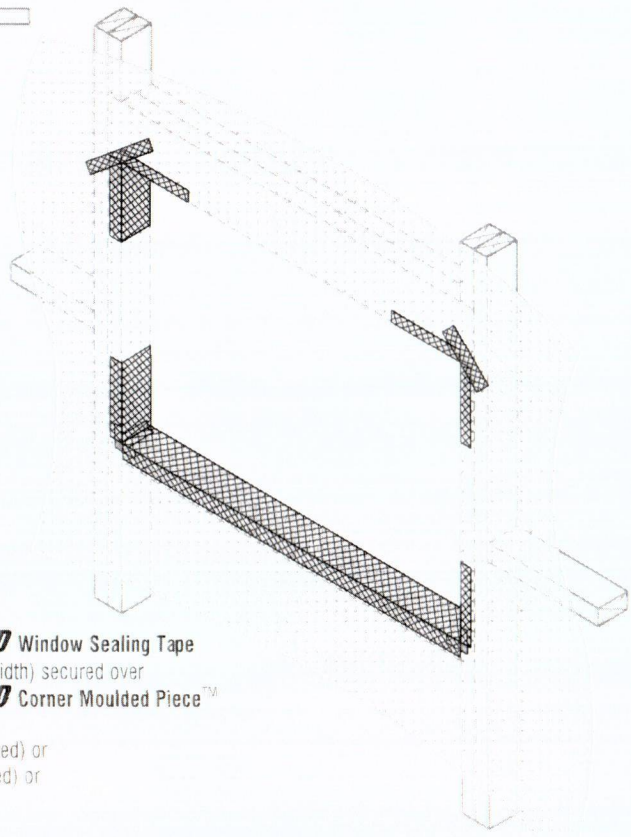

Thermakraft **ALUBAND** Window Sealing Tape
(use 150mm or 200mm width) secured over
Thermakraft **ALUBAND** Corner Moulded Piece™

Thermakraft Diflex 130 (BRANZ Appraised) or
Thermakraft Cover-Up (BRANZ Appraised) or
Thermakraft WaterGate Building Wrap
fixed to external face of framing

Thermakraft Industries (NZ) Ltd
11 Turin Place, Auckland
P.O. Box 58-112, Greenmount, Auckland
Ph: +64 9-273 3727 Fax: +64 9-273 3726
Free Phone 0800 806 595

DRAWING TITLE	DATE	SHEET No.
Window Sealing Tape	JUNE 2005	**W6**
DRAWN MKN	© Copyright	SCALE NTS

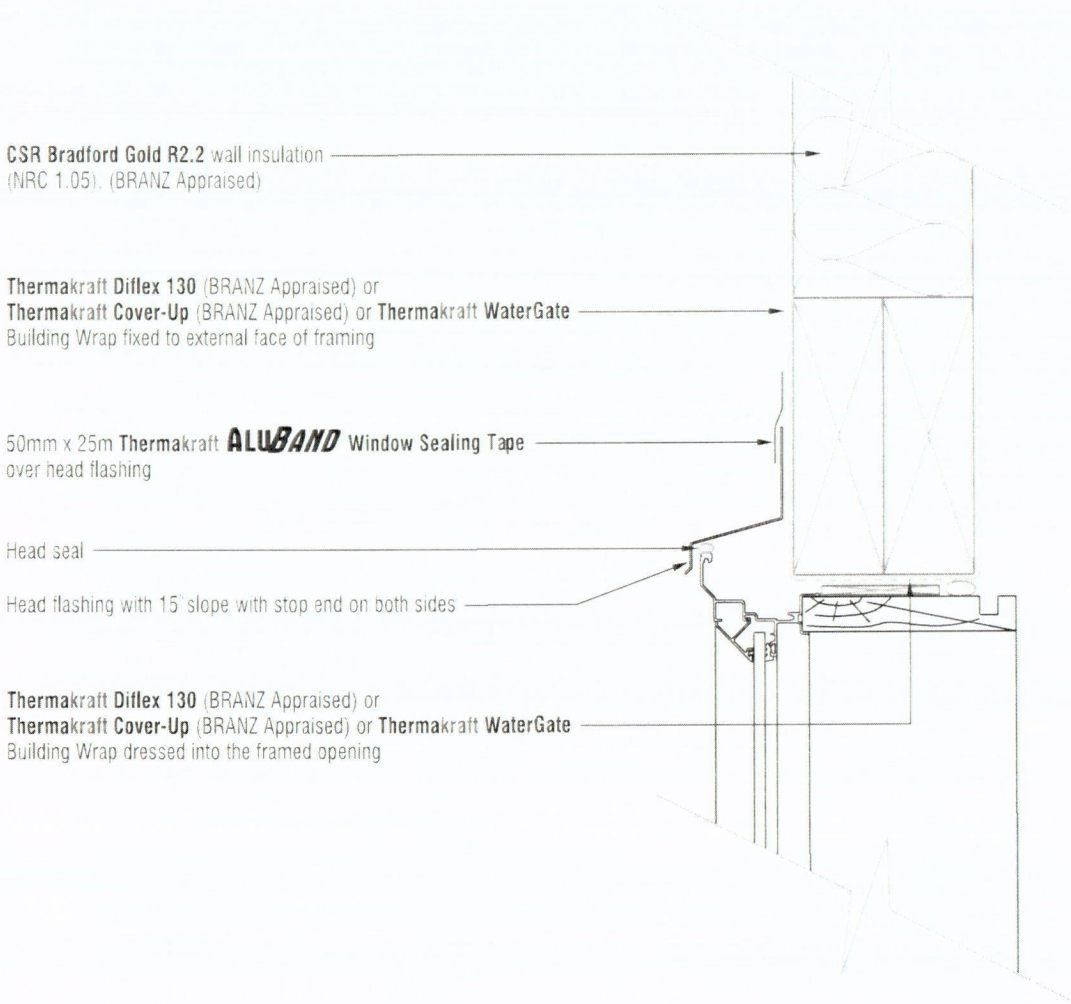

Thermakraft Industries (NZ) Ltd

11 Turin Place, Auckland
P.O. Box 58-112, Greenmount, Auckland
Ph: +64 9-273 3727 Fax: +64 9-273 3726
Free Phone 0800 806 595

DRAWING TITLE	DATE	SHEET No.
Window Sealing Tape	JUNE 2005	**W7**
DRAWN MKN	© Copyright	SCALE NTS

This brochure supersedes all previous brochures. **Thermakraft Industries (NZ) Ltd** retains the right to change products and specifications without prior notification. Do not use this product in an application other than that detailed in this brochure, relevant Standards, Codes of Practice, Building Legislation and/or Health & Safety Regulations, without obtaining written advice from Thermakraft Industries (NZ) Ltd. All product dimensions and performance claims are subject to any variation caused by normal manufacturing process and tolerances. This information is provided without prejudice by **Thermakraft Industries (NZ) Ltd**.

Thermakraft ALUBAND TOOL • THE METHOD

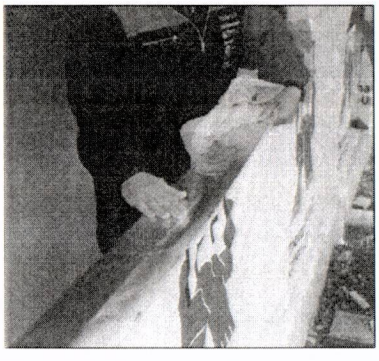

ENSURE A FIRM PRESSURE IS MAINTAINED DURING THE APPLICATION. THE EDGES OF ALUBAND MUST BE PUSHED FIRMLY INTO THE WRAP OR BUILDING MEMBRANE.

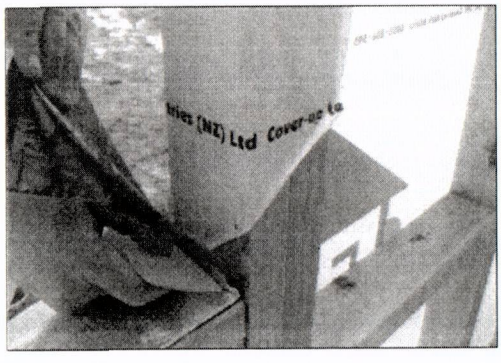

AS WITH THIS PHOTO. *NOTE THE USE OF THE ALUBAND TOOL TO PUSH THE ALUBAND TIGHTLY INTO THE CORNER MOULD. ENSURE ALUBAND IS NOT ADHERED PAST THE INSIDE FACE OF THE SILL. THE ALUBAND IS NOW READY TO BE CUT AT THE SILL/JAMB INTERSECT.*

CBI 5113

March 2007

GIB Aqualine® Wet Area Systems

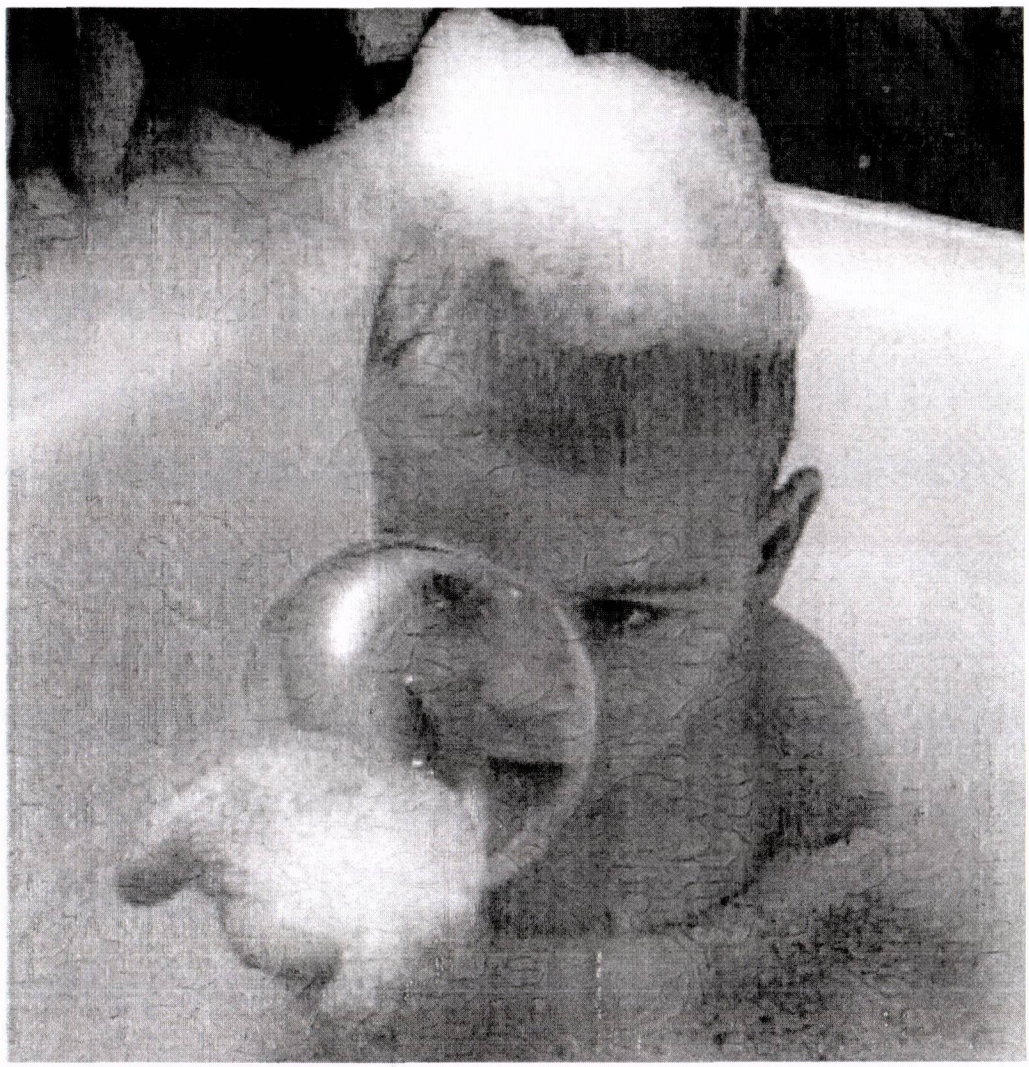

www.gib.co.nz

GIB®

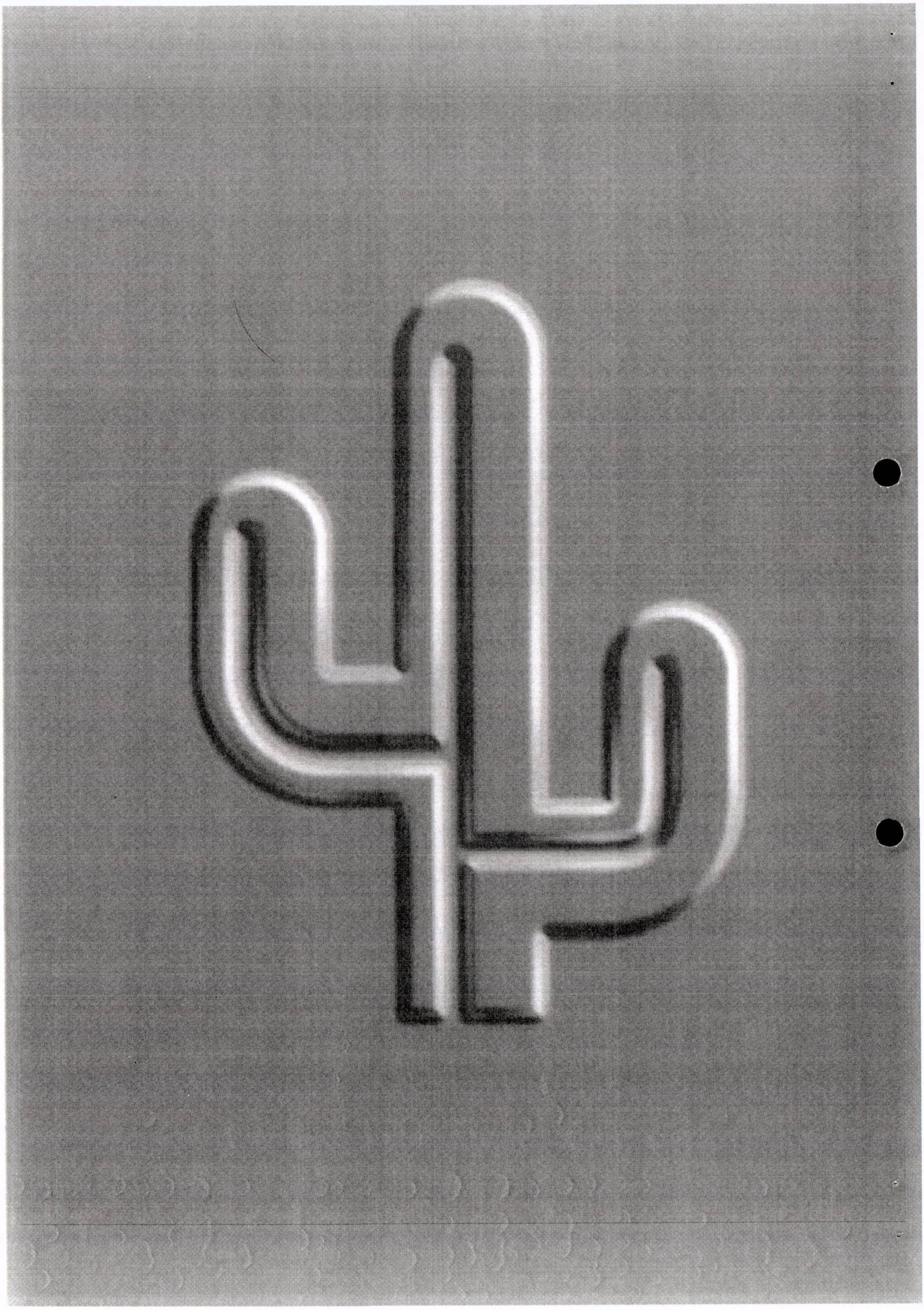

GIB Aqualine® Wet Area Systems Specification and Construction Guide

- Residential and non-residential applications.
- Bathrooms, laundries, toilets and kitchens.

GIB Aqualine® Wet Area Systems, March 2007

Winstone Wallboards Ltd accepts no liability if the GIB Aqualine® Wet Area System is not designed and installed in strict accordance with instructions contained in this publication.

Use only the Current Specification

This publication may be superseded by a new publication. Winstone Wallboards accepts no liability for reliance upon publications that have been superseded. Before proceeding, you should check that this is the current version of the publication. Simply call the GIB® Helpline on 0800 100 442 or visit www.gib.co.nz

Beware of Substitution

The performance of GIB® Systems is very sensitive to design detailing, product specifications and construction practices. All GIB® Systems have been developed specifically for New Zealand conditions and independently tested or assessed to ensure the required level of performance. Therefore for GIB® Systems it is important to use only GIB® branded components where specified and closely follow the specified design details and construction practices, so you can be confident that the required level of performance and quality is achieved on site.

Customised Design Solutions

The systems detailed in this book should cover most common wet area situations. However, for projects where specific performance is necessary, GIB® Technical Services can assist you to develop customised solutions. Simply contact us through the GIB® Helpline on 0800 100 442.

This publication supersedes the following publication:

GIB Aqualine® Wet Area Systems, October 2002 (v2).

BRANZ Appraised
Appraisal No.427 [2007]

GIB Aqualine® Wet Area Systems, March 2007.

Table of Contents

MARCH 2007

Page

Introduction 3
- This Publication 3
- What is a Wet Area? 3
- GIB Aqualine® 3-4

DESIGN

Design Considerations 4
- Appraisal 4
- Compliance with the New Zealand Building Code (NZBC) 4-5
- Limitations 5
- Bracing in Wet Areas 5
- New Zealand Building Code 6
- Wall Surfaces in Areas Likely to be Splashed 6
- Surfaces in Showers and Around Baths 6
- Wall Surfaces Surrounding Cooktops 7
- Penetrations and Sealants 7
- Waterproof Membranes 7
- Tiling 7
- Flexible Sheet Vinyl – Showers and Other Wet Areas 8
- Rigid Sheet Shower Linings 8
- Renovations 8
- Maintenance 8

Non-residential and Apartments 9
- High-rise Apartments and Intertenancy 9
- Office, Workplace and Schools 9
- Healthcare and Hospitals 9
- Public Amenities and Sports Clubs 9

FRAMING AND LINING INSTALLATION

Non-tiled Walls – Timber Framing 10

Non-tiled Walls – Steel Framing 11

Tiled Walls 12

Ceilings 13

TYPICAL DETAILS

Shower Over Bath – Tiled Walls 14-15

Shower Over Bath Acrylic Liner 16

Bath – Tiled Upstand 17

Shower – Tiled Walls and Base 18-19

Shower – Tiled Walls and Acrylic Base 20

Shower – Acrylic Liner and Base 21

Kitchen and Laundry 22

Office, Workplace or School Bathroom 23

Healthcare and Hospital Bathroom 24

Fire Rated and Noise Control 25

Reference Documents 26

Notes 26

Specification and Installation Checklist 27

Introduction

MARCH 2007

THIS PUBLICATION

This publication is not intended as the definitive guide on wet area construction and wet area systems, but rather as a helpful guide to best practice around areas where there is intermittent water exposure and splash zones within residential and non-residential buildings – in particular, areas covered by the New Zealand Building Code (NZBC) Clause E3 Internal Moisture.

The information herein is designed to be helpful to designers, contractors and home-owners wishing to achieve a result that is easy to incorporate into modern design, simple and clear to construct, and that will satisfy the needs, requirements and expectations of both the NZBC and the end user.

Wet areas in the home often require relatively frequent and expensive renovation or repair, often because of the ingress of water to the structure of the building.

It is important to introduce materials and systems which have been specially designed to cope with the conditions that are common in wet areas, and to ensure they are installed correctly, using best practice, and are compatible to form a complete wet area system.

The code numbers shown with each "typical detail", e.g. GAW-D030, match the code numbers for drawings available as downloads on the GIB® website at www.gib.co.nz

The reference numbers (e.g. GAW-D030) stand for:

GAW	D	030
GIB Aqualine® Wet Area System	Detail	Drawing Number

WHAT IS A WET AREA?

Generally, wet areas are described as spaces to where fresh water is reticulated, such as bathrooms, toilets, laundries and kitchens. Wet areas fall into two categories; these are well explained and documented in the NZBC Clause E3.

1. Water splash areas – These are areas subject to intermittent splash of liquid water around sanitary fittings and appliances such as baths, vanities, laundry tubs, sinks, etc. These areas are required to have an impervious, easily cleaned surface.
2. Shower enclosures – These are areas subject to more frequent, larger quantities of water, and include shower enclosures and shower over bath areas. The NZBC E3/AS1 requires these areas to be impervious, and specifically excludes any paint and wallpaper finishes. Where ceramic tile or stone finishes are applied, E3/AS1 requires that they "shall be laid on a continuous impervious substrate or membrane".

The requirements of these wet areas are described on page 6 of this publication and in full in Clause E3 of the NZBC. Clause E3 also refers to other requirements not covered in this publication, such as ventilation, condensation control and overflow management, which will require separate consideration. Ongoing maintenance of wet areas is also important to maximise the life of the wet area.

GIB AQUALINE®

Although able to cope with infrequent short-term exposure, standard gypsum plasterboard will have a shortened life expectancy when frequently exposed to water or moisture.

The NZBC does not call for water resistant linings in wet areas but it is highly desirable to incorporate lining materials which will maintain their integrity longer when exposed more frequently to water or steam and particularly to one-off events such as leakages or flooding of a room.

GIB Aqualine® is ideal in such situations because it features a water resistant wax polymer impregnated core.

Unlike other commonly used substrates, the GIB Aqualine® core not only resists penetration of water through the lining into the framing behind, but also resists water "wicking" up the core, a common cause of long-term damage where a water resistant lining has not been used.

GIB Aqualine® will maintain its integrity for extended periods, particularly where wicking over large areas can destroy the integrity of the interface between the lining and paint or wallpaper surfaces or between the lining and the tile adhesive.

The illustrations below graphically show the difference between GIB Aqualine® and standard plasterboard after a two-hour soak test in red dye.

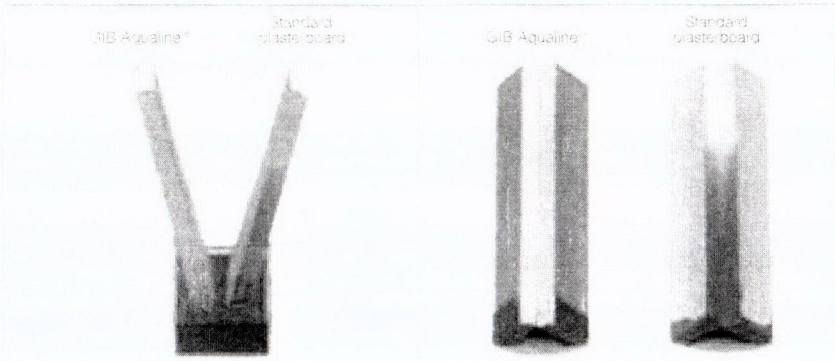

Introduction/Design Considerations

GIB AQUALINE® *continued*

Where to Use GIB Aqualine®

Though not required by NZBC, it is highly desirable to include GIB Aqualine® in all areas at risk of water or moisture damage, in order to prolong the life expectancy of that space.
They include:

	WALLS	CEILINGS
BATHROOMS	✓	✓
SHOWERS	✓	✓
LAUNDRY	✓	✓
KITCHEN	✓	
TOILET	✓	

Benefits

- Water resistant and durable to help protect against water damage
- Proven substrate for paint, wallpaper, tiles, sheet vinyl and rigid sheet shower linings with installations in over 300,000 bathrooms in New Zealand
- Suitable for both residential and non-residential applications
- Dimensionally stable, will not buckle or warp, hence an excellent substrate for ceramic tiles
- Conventional jointing methods
- Easy to cut and form openings
- Contains fibreglass and other additives for strength and fire resistance
- May be used in GIB® Bracing, GIB® Fire Rated and GIB® Noise Control Systems (see Compliance with the NZBC, Clauses B1, C3 and G6). Consult the appropriate GIB® literature for installation details
- Green face paper for ease of recognition.

Sheet Dimensions and Weights

SHEET DIMENSIONS (ALL SHEETS 1200mm WIDE AND TE/TE)		MAXIMUM WEIGHT of
Thickness (mm)	**Length (mm)**	
10	2400, 2700, 3000, 3600	7.8kg
13	2400, 2700, 3000, 3600	10.2kg

Handling and Storage

- GIB Aqualine® must be stored under cover, stacked flat and clear of the floor with sufficient support to avoid sagging
- GIB Aqualine® must be handled as a finishing material.

APPRAISAL

The document entitled *GIB Aqualine® Wet Area Systems* 2007 has been appraised by BRANZ, Appraisal Certificate No. 427 (2007).

COMPLIANCE WITH THE NEW ZEALAND BUILDING CODE (NZBC)

Structure – Clause B1

The design and material specification for steel and timber framing used in GIB Aqualine® systems must be in accordance with the performance requirements of NZBC Clause B1 (Structure). See Bracing in Wet Areas on page 5.

Durability – Clause B2

When installed and maintained in accordance with this literature, GIB Aqualine® tiled or vinyl covered systems have a serviceable life of at least 15 years. They comply with the requirements of NZBC Clause B2 (Durability) for use in wet areas directly exposed to liquid water, e.g. showers, showers over baths and splash-backs.
When used as a general wet area lining and maintained under normal dry internal conditions, GIB Aqualine® systems have a serviceable life of at least 50 years and comply with NZBC Clause B2 (Durability) for use within toilets, kitchens, bathrooms and laundries not directly exposed to liquid water.

Spread of Fire – Clause C3

GIB® Fire Rated Systems provide passive fire protection in accordance with the requirements of NZBC Clause C3 (Spread of Fire). When GIB Aqualine® is substituted into fire rated systems in place of the equivalent thickness GIB Fyreline®, the Fire Resistance Rating (FRR) of that system will be maintained.

GIB

Design Considerations

MARCH 2007

COMPLIANCE WITH THE NEW ZEALAND BUILDING CODE (NZBC) *continued*

Internal Moisture – Clause E3

When installed in accordance with this literature, tiled or vinyl covered GIB Aqualine® systems may be used in areas directly exposed to liquid water, such as showers, to provide an impervious and easily cleaned wall surface. These systems comply with the requirements of NZBC Clause E3 (Internal Moisture).

Hazardous Building Materials – Clause F2

At no stage during handling, installation, or serviceable life does GIB Aqualine® constitute a health hazard. It therefore meets the provisions of NZBC Clause F2 (Hazardous Building Materials). Dust resulting from the sanding of stopping compounds may be a respiratory irritant and the use of a suitable facemask is recommended.

Ventilation – Clause G4

NZBC Clause G4 (Ventilation) requires buildings to have a means of collecting or otherwise removing steam generated from laundering, utensil washing, bathing or showering. To prolong the life of interior linings and surface finishes and to minimise the risk of moisture related problems such as condensation and mould growth, adequate heating and mechanical ventilation must be provided in kitchens, bathrooms and laundries.

Airborne and Impact Sound – Clause G6

GIB® Noise Control Systems can be used to provide ratings for Sound Transmission Class (STC) and Impact Insulation Class (IIC) in accordance with the requirements of NZBC Clause G6 (Airborne and Impact Sound). When GIB Aqualine® is substituted into GIB® Noise Control systems in place of the equivalent thickness GIB® Standard plasterboard or GIB Fyreline®, the STC and IIC rating of that system will be maintained. When GIB Aqualine® is substituted in place of the equivalent thickness GIB Noiseline®, a small performance loss may occur. For further information contact the GIB® Helpline 0800 100 442.

LIMITATIONS

- GIB Aqualine® must not be used for bracing purposes in shower cubicles or above baths (see Bracing in Wet Areas below)
- Do not use GIB Aqualine® where it may be exposed for extended periods to humidities of 90% RH and above. Such areas include group shower or steam rooms as well as moisture and chlorine rich environments such as indoor swimming pools
- GIB Aqualine® must not be directly applied to solid plaster (gypsum or cement), wood based sheet linings or similar materials, masonry or concrete. GIB Aqualine® may only be applied to these materials where timber strapping or steel furring channels are installed
- GIB Aqualine® must not be installed over a vapour barrier or a wall acting as a vapour barrier
- Cracked or damaged sheets must never be used
- GIB Aqualine® must not be used in external applications
- GIB® plasterboard must not be exposed to temperatures in excess of 52°C for prolonged periods. Heat-generating devices may include halogen lighting, cooking elements, radiant heating, solid fuel exhausts and fire surrounds. Consult the appliance manufacturer for installation details.

BRACING IN WET AREAS

Bracing elements are required to have a durability of 50 years. GIB® bracing elements are not to be located in shower cubicles or behind baths because of durability requirements, the likelihood of renovation, and practical issues associated with fixing bracing elements to perimeter framing members.

Otherwise, GIB® Bracing Systems can be used in water-splash areas as defined by NZBC Clause E3/AS1, provided these are maintained impervious for the life of the building.

GIB Aqualine® can be used in place of GIB® Standard plasterboard in GIB® bracing elements. GIB Aqualine® can be used in place of GIB Braceline® in GIB® bracing elements 900mm or longer, provided the perimeter of the element is fixed with GIB Braceline® Nails or GIB Braceline® screws at 100mm centres, using the GIB Braceline® corner fixing pattern.

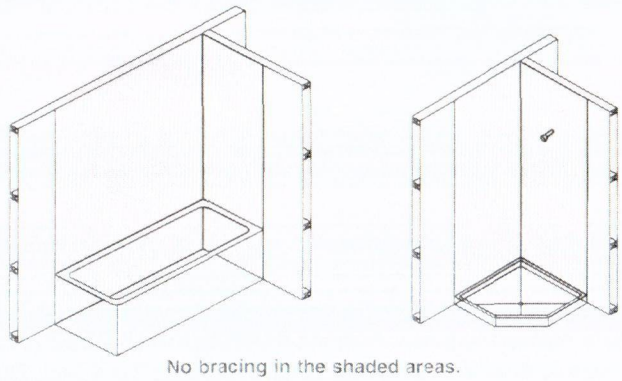

No bracing in the shaded areas.

Design Considerations

MARCH 2007

NEW ZEALAND BUILDING CODE

E3.3.4 requires impervious and easily cleaned surfaces to all surfaces adjacent to sanitary fixtures or laundering facilities.

E3.3.5 requires that surfaces of building elements likely to be splashed or contaminated in the course of the intended use of the building must also be impervious and easily cleaned.

E3.3.6 requires that surfaces of building elements likely to be splashed must be constructed in a way that prevents water from penetrating behind linings or into concealed spaces (e.g. wall cavities).

Walls in wet areas therefore need to be addressed according to whether they fall within the scope of one of the following descriptions:

1. Wall surface likely to be splashed
2. Shower walls. Although not a requirement of NZBC it is highly recommended that the wall surfaces within 150mm of the top edge of a bath, and the vertical faces immediately under the edge of a bath, are treated in the same way as for a shower wall.

WALL SURFACES IN AREAS LIKELY TO BE SPLASHED

Suitable linings include:

a. Integrally waterproof sheet material (e.g. polyvinylchloride) with sealed joints
b. Ceramic or stone tiles having 6% maximum water absorption, waterproof grouted joints, and bedded with an adhesive specified by the tile manufacturer as being suitable for the tiles, substrate material and the environment of use
c. Cement based solid plaster or concrete having a steel trowel or polished finish (semi-gloss or gloss paint must be used if a paint finish is required)
d. Cork tile or sheet sealed with waterproof applied coatings
e. Monolithic applied coatings having a polished, non-absorbent finish (e.g. terrazzo)
f. Sheet linings finished with vinyl coated wallpaper, or semi-gloss or gloss coating
g. Water resistant sheet linings finished with decorative high pressure laminate or factory applied polyurethane or resin
h. Modular or multiple lining units which are themselves *impervious* and easily cleaned, and are installed with *impervious* joints
i. Timber or timber-based products such as particleboard sealed with waterproof applied coatings.

NB: Floor surfaces and floor/wall junctions are required by E3 to be impervious.

SURFACES IN SHOWERS AND AROUND BATHS

Suitable linings include all of the above, but **NOT including items (d) and (f) from the above list.**

Note that a waterproof membrane complying with AS/NZS 4858: 2004 **MUST** be applied to all lining materials used under ceramic tiles in these areas.

The waterproof membrane must extend to a 1500mm horizontal radius from a shower rose unless the shower is contained within a fixed enclosure. A shower curtain does not constitute a fixed enclosure.

Particleboard manufacturers recommend that in wet areas, panels should be protected with a suitable wet area membrane or an integrally waterproof sheet material. Some local authorities call for this treatment on all timber based floors. Local requirements should be checked before proceeding.

Dark grey shaded areas in the diagrams below represent the minimum extent of wall surfaces requiring impervious sheet materials or waterproof membranes prior to tiling. Light grey shaded areas represent good practice.

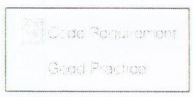

Unenclosed shower over bath

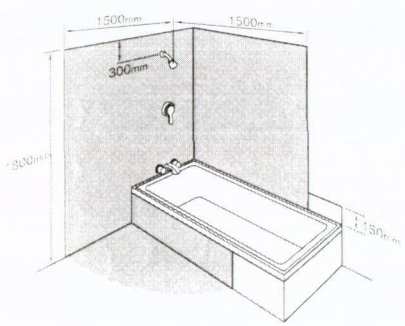

Unenclosed shower

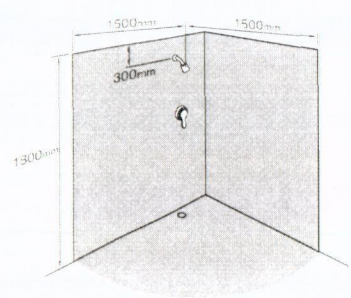

Enclosed shower over bath

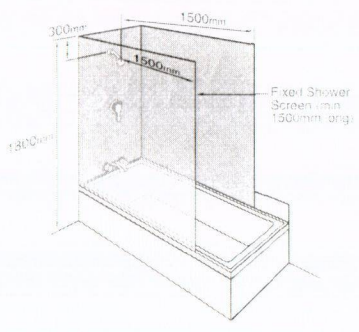

Bath

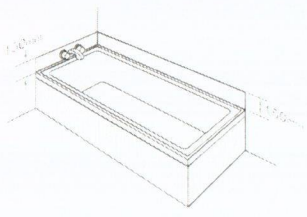

Enclosed shower

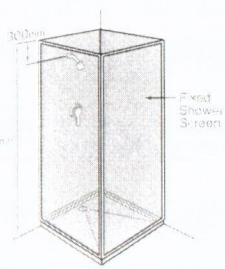

GIB

Design Considerations

MARCH 2007

WALL SURFACES SURROUNDING COOKTOPS

The protection of combustible surfaces surrounding gas cooking appliances is covered by NZS 5261. Consult the current version of this standard to ensure compliance.

However, as a guide the following options are acceptable for wall surfaces within 200mm of the periphery of a gas element to a height of 150mm above the element for the full dimension (width and depth) of the cooktop surface area:

- 5mm ceramic tiles on GIB® plasterboard
- 5mm toughened glass on GIB® plasterboard
- or any system that can be demonstrated to meet the requirements of Clause 2.6.2.6 of NZS5261.

Because of the moisture generated by cooking, it is highly recommended that GIB Aqualine® is used in kitchen areas.

GIB® plasterboard products must not be exposed to temperatures in excess of 52°C for sustained periods. Check with the appliance manufacturer that this requirement will be met. However, it would be unusual for surfaces outside 200mm to exceed 52°C for sustained periods.

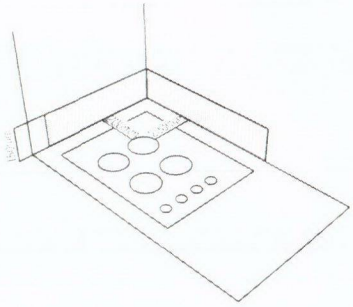

PENETRATIONS AND SEALANTS

As leaks and water ingress typically occur at junctions between building elements and at penetrations, it is essential that particular attention is given to these details at the time of installation. Lack of attention to detail can result in water damage that could remain undetected for a long time.

- Ensure that all cut-outs for pipe penetrations are made neatly, and slightly oversize, with a hole saw. These penetrations should be of a diameter no more than 12mm greater than that of the pipe
- Sealants should be of a mould inhibiting type and be neutral cure. Neutral cure silicones will generally meet these requirements
- Surfaces should be dry and free from dust before application, a minimum of a 4mm joint width provided and the depth should not exceed the width
- Gun a bead of silicone sealant to the full depth of the GIB Aqualine® in the following locations:
  - Around all tap/pipe bodies
  - The gap between the bath rim and the bottom edge of the GIB Aqualine®
  - Between the upstand of preformed shower bases and the bottom edge of the lining
  - Where an impervious junction is required at the floor/wall line, carefully seal the gap between the bottom edge of the board and the finished floor. Leave a 5-10mm gap at the bottom of the GIB Aqualine® wall lining for this purpose, ensuring the gap is free from dirt and dust
- Do not locate shower heads or taps on fire rated or intertenancy walls. Should this be unavoidable then refer to the publication *Penetrations in GIB® Fire Rated Systems*. Always use tested and approved proprietary solutions.

WATERPROOF MEMBRANES

- A waterproof membrane must be applied to **all** lining materials used as a substrate for ceramic tiles in a shower or shower over bath situation
- The wall surface in a shower or shower over bath situation is not complete and ready for tiling until coated with a waterproof membrane over the lining and the jointed areas shown shaded on page 6
- Only in-situ waterproofing materials which are manufactured to AS/NZS 4858:2004 "Wet Area Membranes" are recommended and applied to manufacturer's recommendations. Typically, these types of membranes are not suitable for paint and wallpaper finishes
- Waterproof membranes must be fully cured and dry prior to application of tiling adhesives
- Embed reinforcing mats in the membrane at all internal corners of the shower (including floor/wall junctions)
- Preformed sheet membranes are also available and may be more suitable where curing times or specialist skills are an issue
- The details shown in this technical literature are generic in nature. For accurate detailing, follow the specifications provided by the supplier of the proprietary waterproof membrane.

TILING

GIB Aqualine® is suitable as a substrate for tiling up to the following weights:

- 10mm GIB Aqualine® up to 20kg/m²
- 13mm GIB Aqualine® up to 32kg/m².

Note: Most ceramic and porcelain tiles weigh less than 20kg/m².

For further information on tiling, consult the BRANZ *Good Practice Guide – Tiling*.

HURUNUI DISTRICT COUNCIL
Plans and specifications APPROVED.
In accordance with the Building Act 2004, clause 49(1) and the associated Building Regulations.
Signed .....

GIB

Design Considerations

MARCH 2007

FLEXIBLE SHEET VINYL – SHOWERS AND OTHER WET AREAS

- GIB Aqualine® is a suitable substrate for flexible vinyl wall finishes in wet areas of residential, commercial or institutional buildings.
- Framing requirements and installation procedures for the GIB Aqualine® substrate shall be as per page 10 or 11, except that the lining gap at the floor should be reduced to 5mm when a pencil cove detail is used.
- The installation of galvanised steel reinforcing angles (32 x 32 x 0.55mm) behind internal GIB Aqualine® corners is recommended for sheet vinyl applications in showers or shower over bath situations (see illustration page 14).
- The GIB Aqualine® lining must be jointed and stopped to a paint quality finish (Level 4) – trowel marks can telegraph through even a commercial grade 2mm vinyl.
- A commercial grade vinyl is recommended for the wall finish in commercial or institutional bathrooms and showers.
- In areas directly exposed to liquid water, all joints in flexible sheet vinyl must be heat welded.
- Installation of the flexible vinyl must be carried out strictly in accordance with the specifications provided by the suppliers/manufacturers of the vinyl.

RIGID SHEET SHOWER LININGS

- The manufacturers/suppliers of thin (usually 2-3mm) and rigid acrylic shower linings commonly recommend direct adhesive fixing to wall linings using solvent-based adhesives.
- Water temperature changes will cause movement of the thin acrylic sheet, which in turn will stress the adhesive and wall lining substrate.
- **Do not preseal or paint** areas which are to be covered by the rigid shower linings.
- The wall surface must be free of dust before installation of the lining.
- Suppliers of rigid sheet acrylic shower linings recommend a minimum of 24 hours for the adhesive to cure fully prior to the shower being put into service.
- Care must be taken to ensure that rooms are adequately ventilated and the adhesive is fully cured before the shower is used.
- Consult the manufacturer/supplier of the shower lining for full installation details.

RENOVATIONS

Bathrooms, kitchens and laundries are the most renovated rooms in the house, partly due to fashion considerations and partly because of damage sustained by ingress of water and moisture within those spaces.

In most cases when renovating these rooms it is often easier and more cost-effective to remove the existing linings and replace them with GIB Aqualine®. This allows for a completely new start in the room and offers sound substrates for new surfaces such as tiling and painting, where otherwise flaking paint or damaged plasterboard may compromise good and sound finish or practice. At the very least re-lining will:

- Allow for inspection of framing where damage may have occurred and provide the opportunity to repair such damage.
- Allow plumbing and electrics to be checked and altered or replaced where required.
- Provide the opportunity to install thermal and acoustic insulation and water resistant linings where appropriate.
- Make the job easier.

MAINTENANCE

Lack of maintenance is frequently the cause of premature and often very expensive failure of components and building elements within wet areas.

It is important to regularly inspect and repair any potential problem before it becomes a major problem and expensive to reinstate. Good maintenance should include:

- Ongoing ventilation. At the very least, good passive ventilation (e.g. window vents), but good active ventilation (e.g. extraction fans) of an appropriate size for the room is recommended.
- Impervious coatings and surfaces should be checked for wear and damage and maintained and recoated before ingress of water to the substrate occurs.
- Regular cleaning with appropriate cleaners so that build-up of matter, such as mould, is well controlled.
- Sealants at junctions and penetrations should be checked for adhesion on a regular basis and replaced where adhesion failure to substrates occurs.
- Where pipe leaks have become evident, however small, they should be repaired promptly and any area around such leaks dried out completely before any other repairs are carried out.

Non-tiled Walls – Timber Framing

MARCH 2007

If bracing, noise control or fire rating considerations exist, consult the relevant GIB® technical publication, e.g. *GIB® Fire Rated Systems*, *GIB® Noise Control Systems*, *GIB® Bracing Systems*, for the appropriate information.

Wall Framing

Framing dimensions must comply with the requirements of NZS 3604:1999.

- The moisture content of timber framing shall be 18% or less at the time of lining
- Studs shall be spaced at 600mm centres maximum for both 10mm and 13mm GIB® plasterboard
- Nogs to be evenly spaced with a maximum spacing of 1350mm. Alternatively, nogs may be staggered 150mm maximum either side of a horizontal joint line
- Nogs are not required behind horizontal joints except in shower situations or specific fire or noise control systems.

Fasteners

- 10mm GIB Aqualine® – minimum 25mm x 6g GIB® Grabber® High Thread Drywall Screws or 30mm x 2.8mm GIB® Nails
- 13mm GIB Aqualine® – minimum 32mm x 6g GIB® Grabber® High Thread Drywall Screws or 30mm x 2.8mm GIB® Nails.

Fastener Centres

- 300mm centres to top and bottom plates and to perimeter studs
- Single fasteners to each stud where the horizontal joint crosses the studs
- Place fasteners 12mm from sheet edges
- Daubs of GIBFix® adhesive at 300mm centres to intermediate studs
- Do not place adhesive at sheet edges or under fasteners. Sheet edges at door or window openings can be adhesive fixed unless forming part of the perimeter of a bracing element.

Lining

- Install the sheets leaving a 5-10mm gap at the floor line to allow for movement of the framing members and to allow for cleaning dirt and rubbish before sealing
- Sheets to be touch fitted.

Jointing

- Jointing shall be carried out in accordance with the instructions in the *GIB® Site Guide*. GIB® AquaMix is recommended for the first two coats.

Fastening the Linings – Horizontal Fixing Only

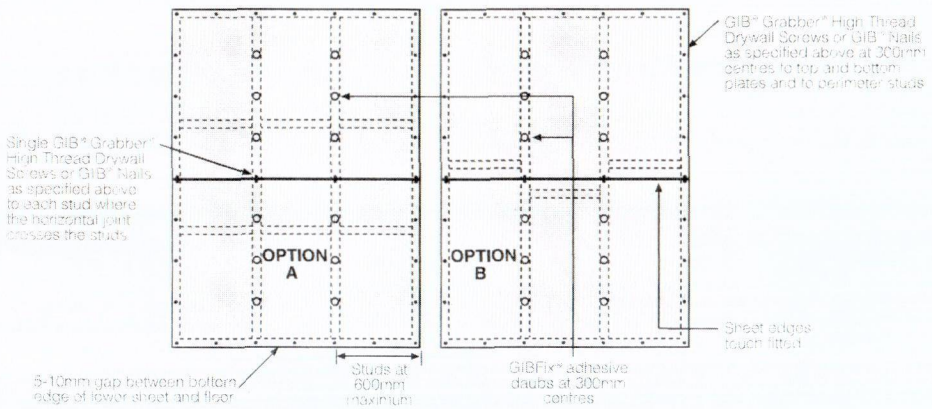

Fastening the Linings – Vertical Fixing Only

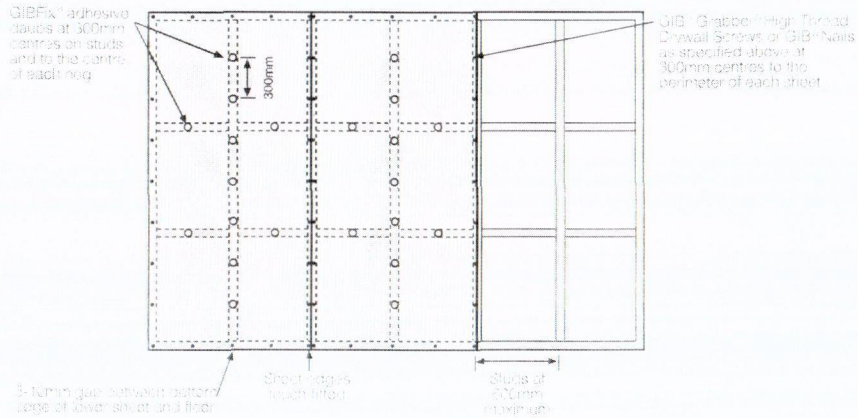

Tiled Walls

MARCH 2007

Important: See page 6 and 7 for waterproof membrane requirements.

Wall Framing

Framing dimensions and spacing must comply with the requirements of NZS 3604:1999 or relevant NZ Standard.

- Prior to lining in tiled areas (shower cubicles and shower over bath only) the internal corners shall be reinforced with a minimum 32 x 32 x 0.55mm galvanised metal angle. Each side of the angle shall be fastened to the framing with 30mm galvanised clouts at 300mm centres.
- Steel stud systems do not generally require nogs except as below:
  - Adjacent to each pipe penetration and behind sink and tub flashings
  - Between all studs above bath flanges and preformed shower bases
- For impact protection in shower cubicles or shower over bath situations it is important that all sheet joints are made on solid framing. This may require either vertical fixing of the GIB Aqualine® or the installation of some additional nogs.

Fasteners

- For 10mm GIB Aqualine® use minimum 25mm x 6g GIB® Grabber® Drywall Screws.
- For 13mm GIB Aqualine® use minimum 32mm x 6g GIB® Grabber® Drywall Screws.

Fastener Centres

- GIB® Grabber® Drywall Screws at 100mm centres to perimeter of wall and to all intermediate studs.
- Adhesive is not to be used in place of mechanical fastenings.

Lining

- 10mm or 13mm GIB Aqualine® is suitable for use on timber framing and for tile weights up to 20kg/m².
- 13mm GIB Aqualine® must be used for tile weights between 20 and 32kg/m² and when light steel framing has been used.
- GIB Aqualine® may be fixed vertically or horizontally.
- Provide a 5-10mm gap at the wall/floor junction.
- Provide a 5-10mm gap between the bottom edge of the GIB Aqualine® and any bath rim or preformed shower base to allow for placement of sealant.
- GIB Aqualine® sheets shall be touch fitted.
- Where the framing or fastener centres required for tiled areas are closer than those specified for GIB® Fire Rated and GIB® Noise Control Systems, the tiling specification shall prevail. Where relevant, check that fastener lengths comply with the requirements of GIB® Fire Rated Systems or GIB® Noise Control Systems.

Jointing

- Jointing shall be carried out in accordance with instructions in the *GIB® Site Guide*.
- Water resistant GIB® AquaMix is recommended for the first two coats.
- No top coat is required.

Fastening the Linings – Horizontal Fixing in Tiled Areas

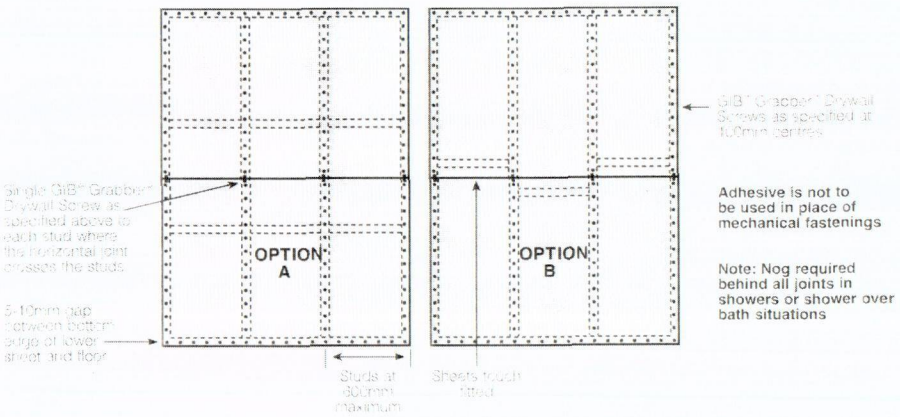

Note:

GIB Aqualine® is suitable for tiling to full height of walls, but if a wall is to be partially tiled (i.e. half high), only the area of wall under the tiles needs to be fixed as above. The remainder of the wall may be fixed as for non-tiled area (see page 10 & 11).

Ceilings

MARCH 2007

Ceiling Framing

Framing dimensions and spacing must comply with the requirements of NZS 3604 1999 or relevant NZ Standard.
If bracing, noise control, fire rating considerations exist consult the relevant GIB® publication for appropriate information.

Fasteners

- Steel battens – 25mm x 6g GIB® Grabber® Self Tapping Drywall screws
- Timber battens or Joists – 32mm x 6g GIB® Grabber High Thread Drywall screws.

Adhesives

- Steel battens – GIBFix® All-Bond
- Timber battens – GIBFix® Wood Bond (not suitable for LOSP treated timber).

Fasteners Centres

- Single screws to the edges and centre of the sheets across each batten
- Screws to be 12mm from sheet edges
- Daubs of adhesive at 200mm centres between the screws
- Do not place adhesive at sheet edges or under fasteners. this may lead to screw or nail pops.

Lining

- The lining shall be fixed at right angles to the battens or joists
- Commence fixing from the centre of the sheets outwards
- Sheets to be touch fitted
- Use long length sheets to minimise sheet end butt joints
- Back-block sheet end butt joints
- See GIB® Site Guide for sheet edge backblocking requirements.

Batten Spacings

- 13mm GIB Aqualine® plasterboard – 600mm centres max
- 10mm GIB Aqualine® plasterboard – 450mm centres max.

Jointing

- All sheet joints must be paper tape reinforced and stopped in accordance with instructions in the *GIB® Site Guide*. Water resistant GIB® AquaMix is recommended for the first two coats.
- Do not fix tiles to GIB® plasterboard ceilings.

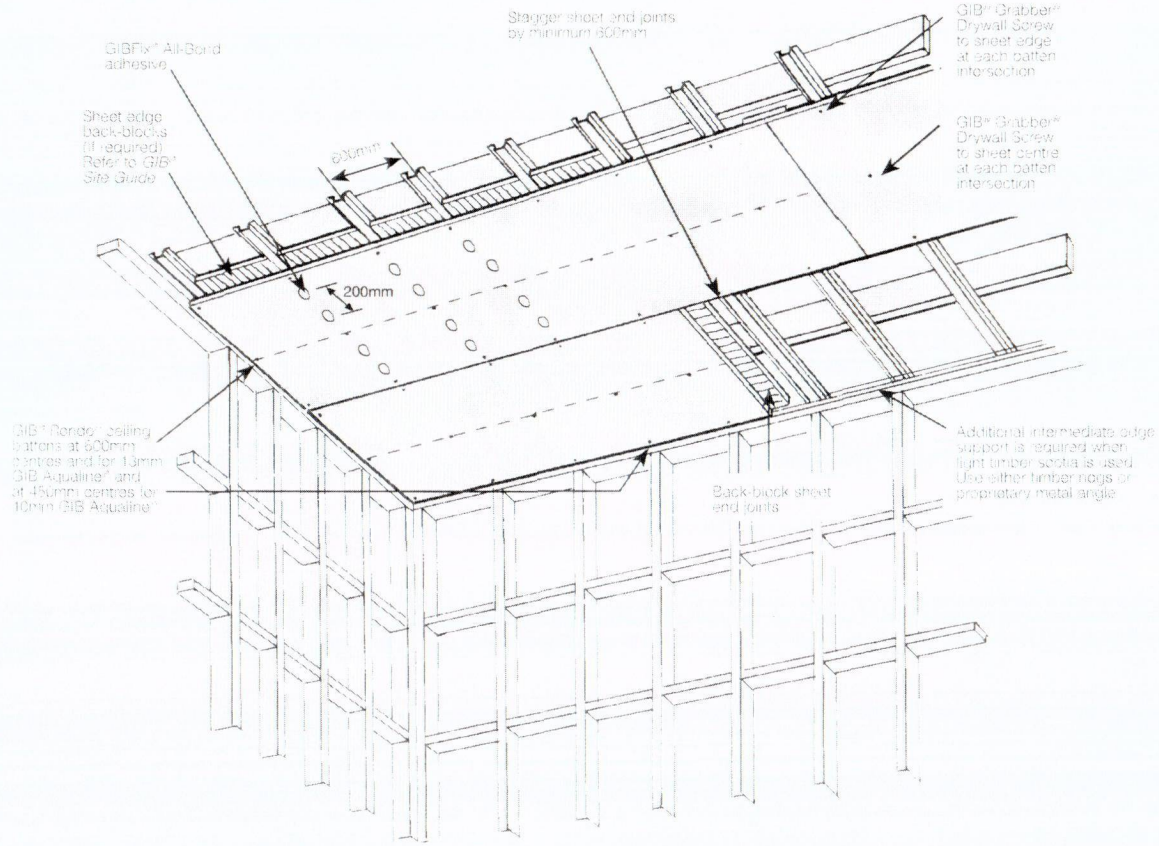

Bath – Tiled Upstand

MARCH 2007

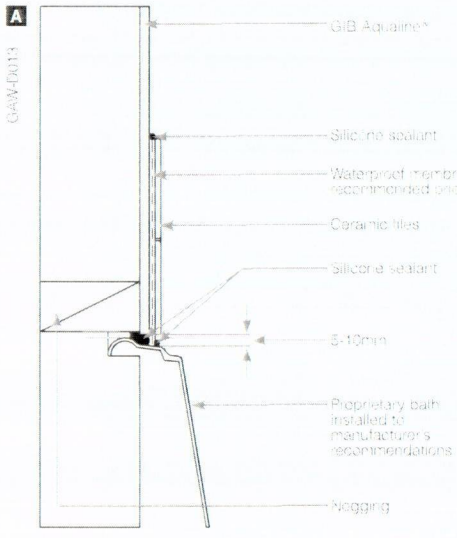

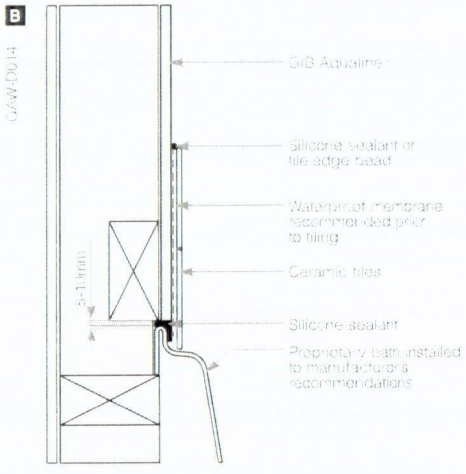

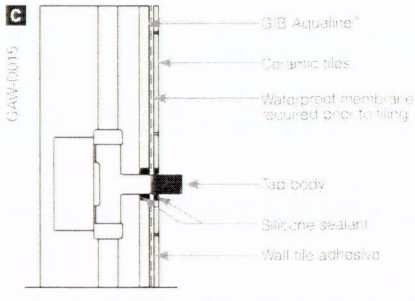

Note:
Where impact noise from pipes is an issue, fix all pipes on resilient brackets

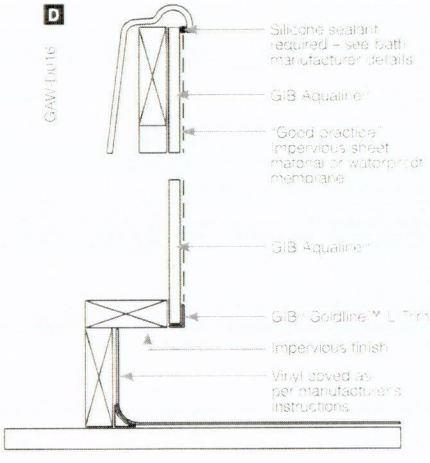

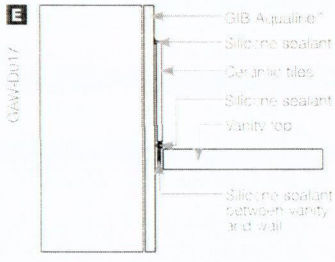

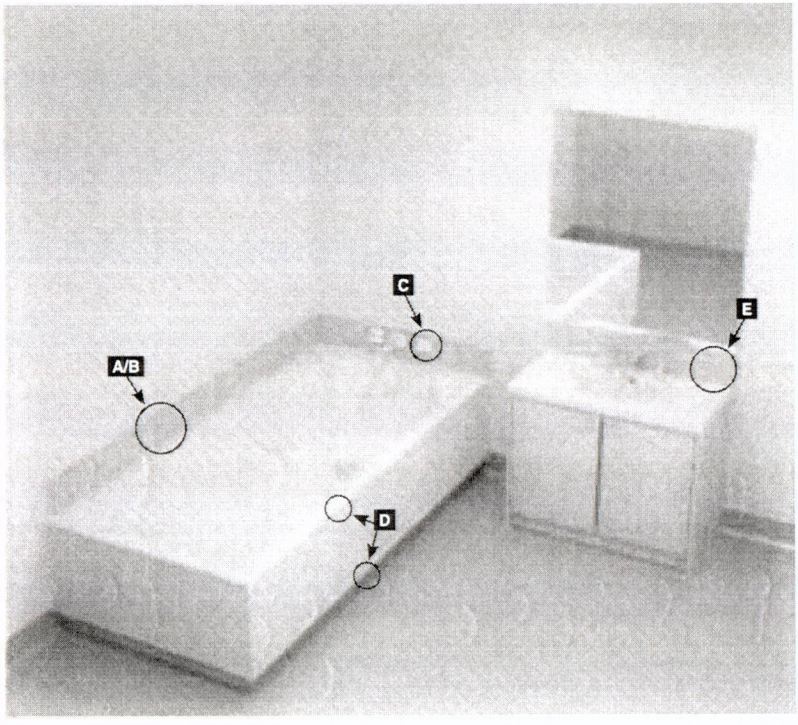

Shower – Tiled Walls and Base

MARCH 2007

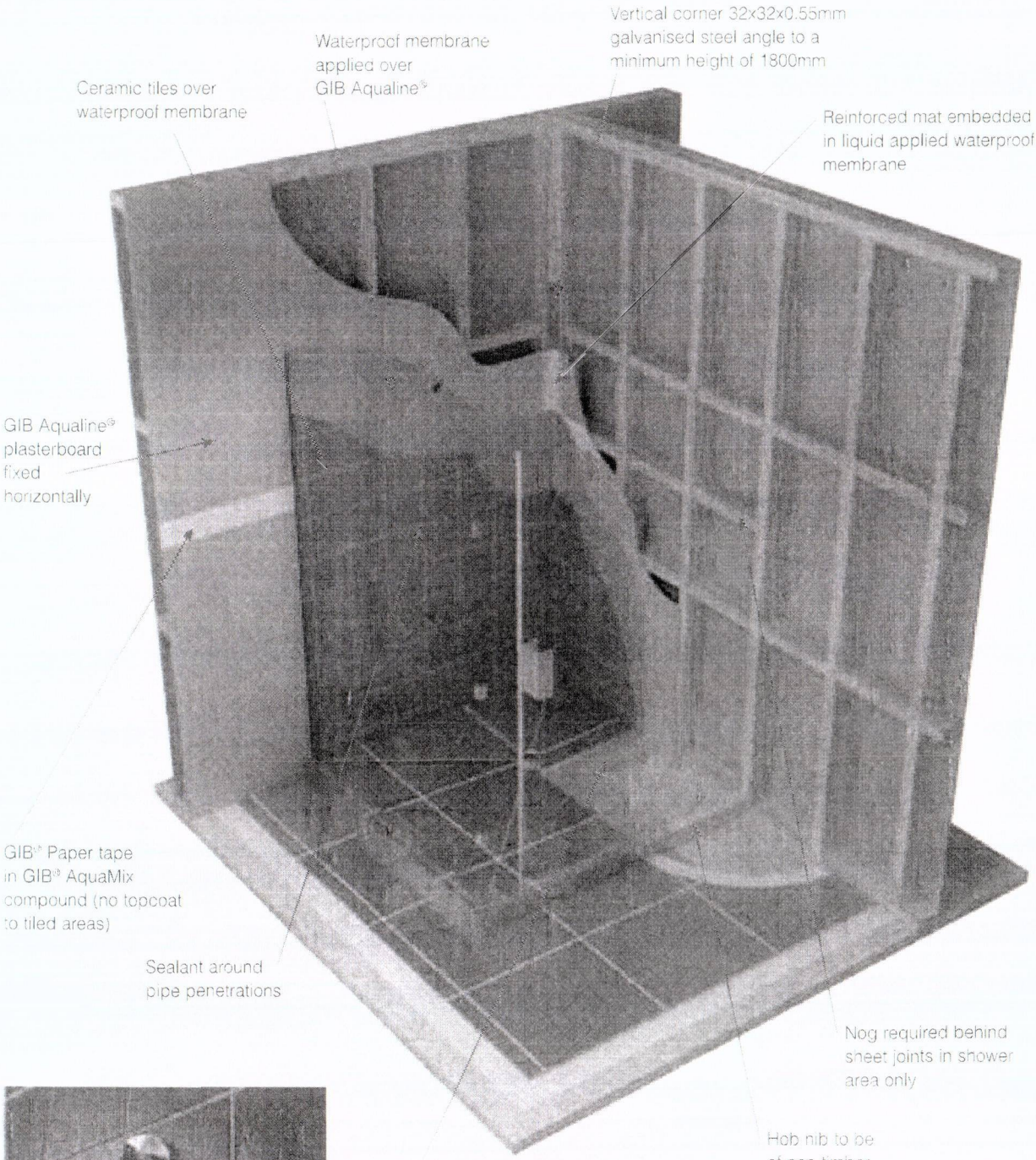

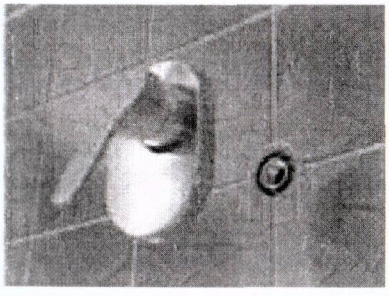

Run a bead of silicone sealant around the mixer unit on the tiles extending below the bottom of the pipe aperture.

For typical details, see the following pages.

Shower – Tiled Walls and Base

MARCH 2007

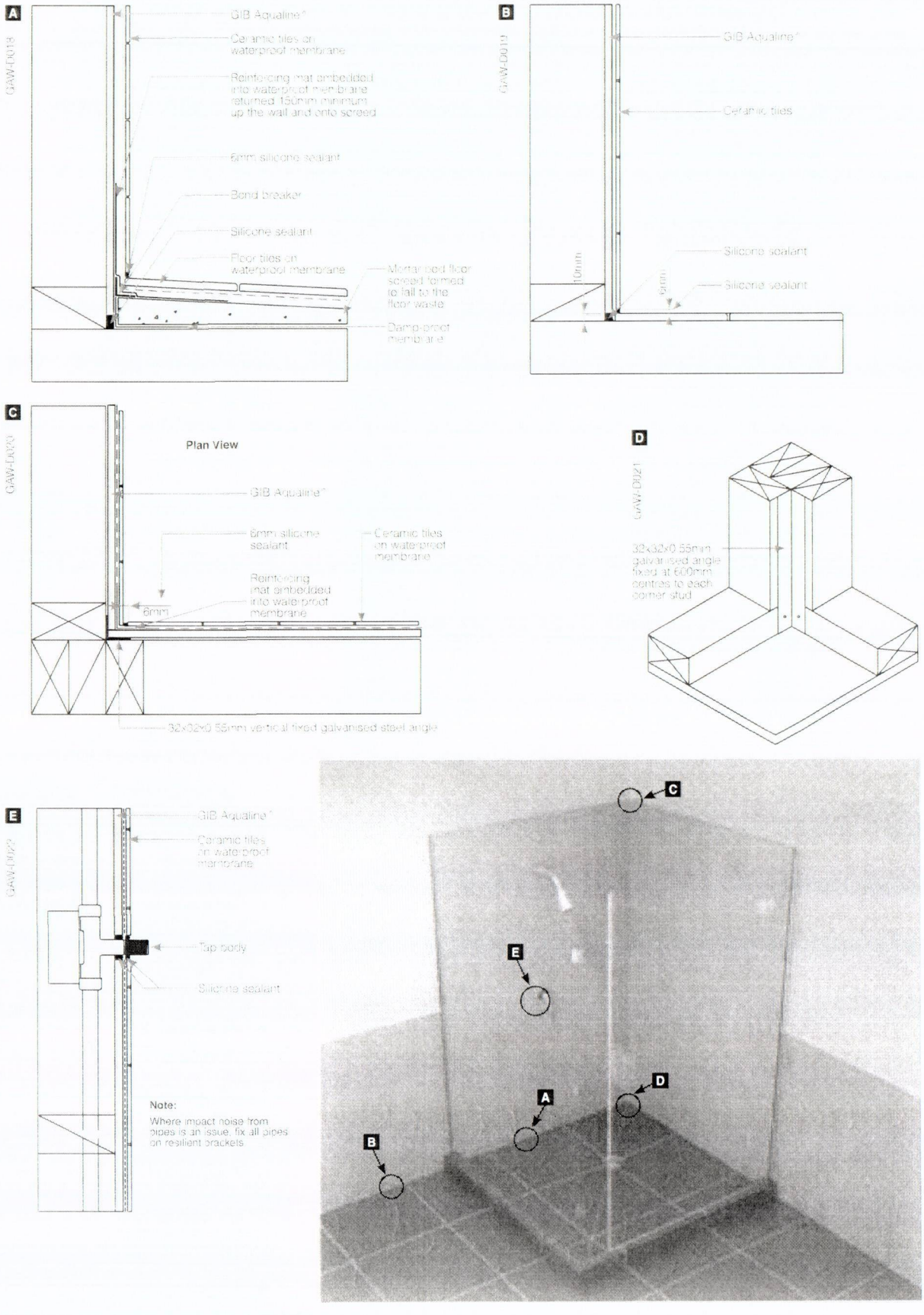

Shower – Acrylic Liner and Base

MARCH 2007

A

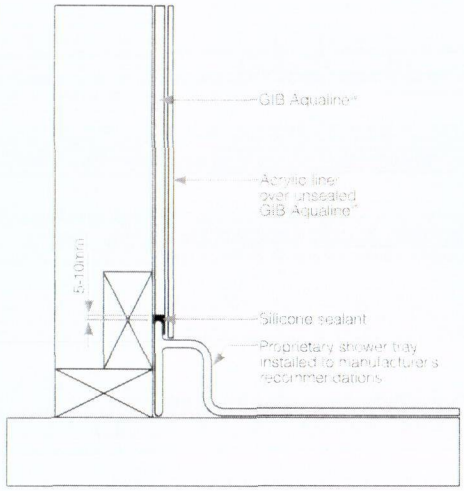

B

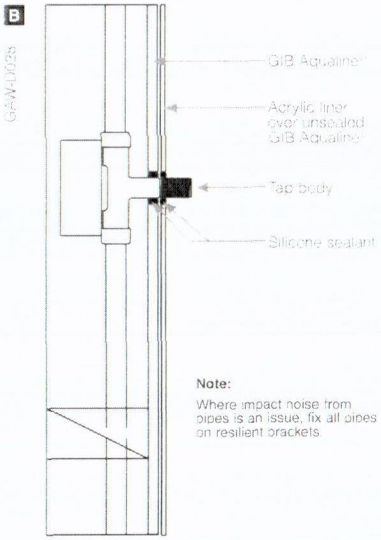

Note:
Where impact noise from pipes is an issue, fix all pipes on resilient brackets.

C

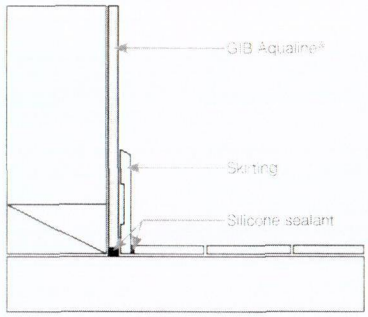

D

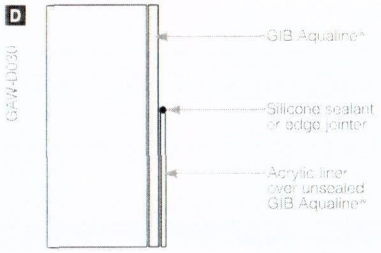

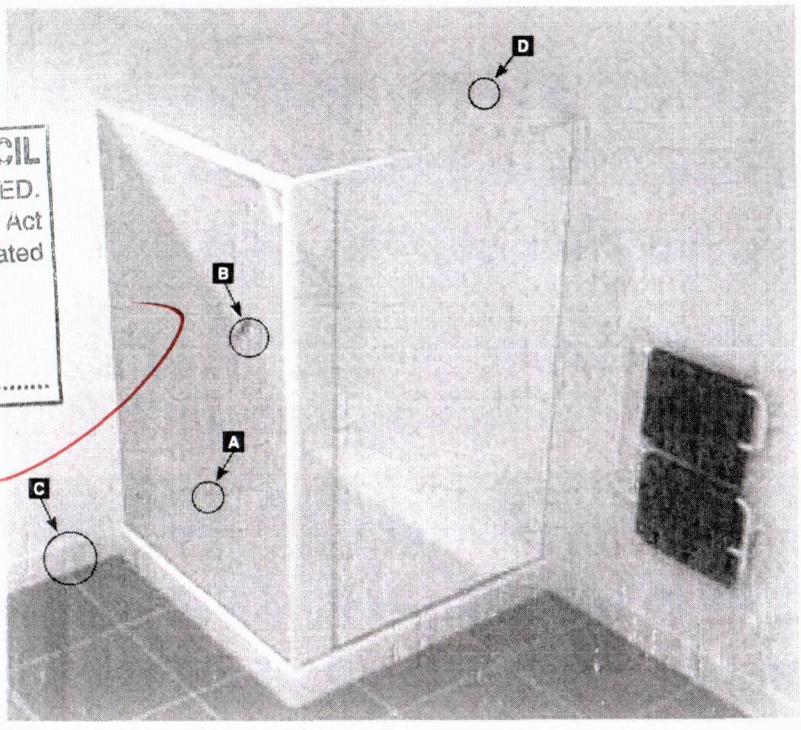

HURUNUI DISTRICT COUNCIL
Plans and specifications APPROVED.
In accordance with the Building Act 2004, clause 49(1) and the associated Building Regulations.
Signed .....

GIB

Kitchen and Laundry

MARCH 2007

A

GAW-D031

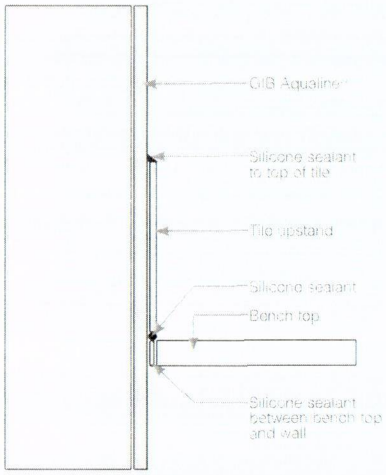

B

GAW-D032

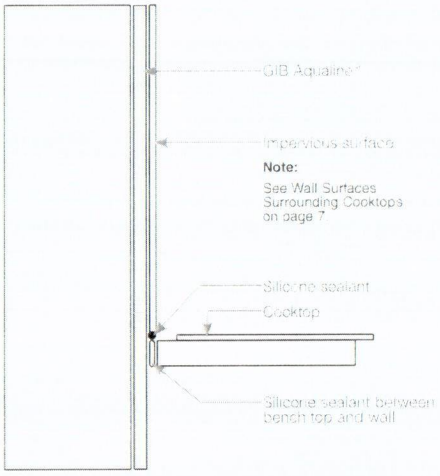

C

GAW-D033

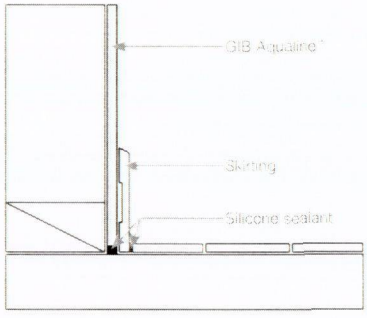

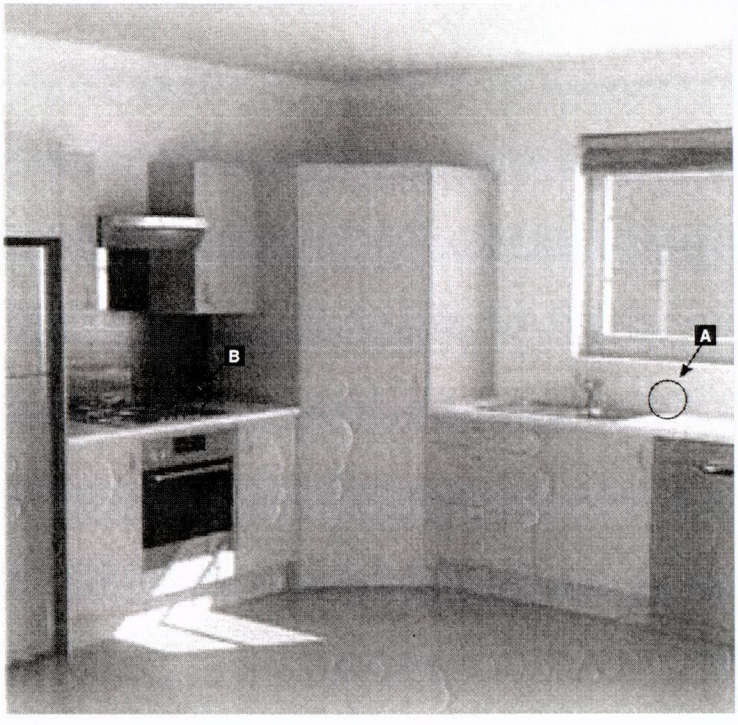

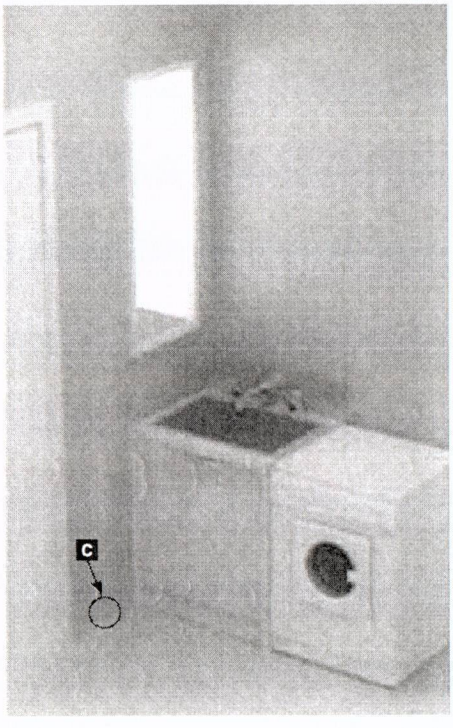

Reference Documents

MARCH 2007

For further information refer to the following relevant documents:

New Zealand Building Code Clause E3. Internal Moisture and Acceptable Solution E3/AS1. February 1998.
Standards New Zealand. New Zealand Standard NZS 3604 1999. Timber Framed Buildings.
Standards Australia. Australian Standard AS 3740:2004. Waterproofing of Wet Areas within Residential Buildings.
Building Research Association of New Zealand. BRANZ Good Tiling Practice. October 1996.
Winstone Wallboards Ltd. GIB® Noise Control Systems. 2006.
Winstone Wallboards Ltd. GIB® Fire Rated Systems. 2006.
Winstone Wallboards Ltd. GIB® Penetrations in GIB® Fire Rated Systems. 2003.
Winstone Wallboards Ltd. GIB® Bracing Systems. 2006.
Winstone Wallboards Ltd. GIB® Site Guide. 2006.

Notes

Specification and Installation Checklist

MARCH 2007

Contract ID	
Site Address	
Client Name	
Designer	
Builder	
Plasterboard Installer	
Plasterboard Supplier	
Tiler	
Shower Installer	

DESIGNER	YES	NO	CHECKED BY	DATE
GIB Aqualine® specified for wet areas and appropriate details included on plans?				
Are tiled areas clearly shown on plans?				
Is area requiring waterproof membrane clearly shown on plan?				
Is the waterproof membrane required to be installed by a licensed applicator? If so, is this noted on the documentation?				
No bracing behind shower or bath?				
BUILDER	**YES**	**NO**	**CHECKED BY**	**DATE**
Galvanised steel angle installed to the internal corners of tiled shower?				
All sheet joints in showers to be made on solid timber. This may require some additional dwangs for horizontal board installation.				
PLASTERBOARD INSTALLER	**YES**	**NO**	**CHECKED BY**	**DATE**
10mm GIB Aqualine® for tiles up to 20kg per m²?				
13mm GIB Aqualine® for tiles up to 32kg per m²?				
GIB Aqualine® mechanically fastened at 100mm centres when tiles are to be installed?				
All junctions between GIB Aqualine® and walls, floors, baths, showers and other elements are correctly sealed with appropriate sealant?				
Pipe penetrations sealed?				
PLASTERBOARD STOPPER	**YES**	**NO**	**CHECKED BY**	**DATE**
Air drying compound (e.g. GIB ProMix® or GIB Plus 4®) not to be used on areas to be tiled.				
Recommended that GIB® AquaMix is used in wet areas.				
TILER	**YES**	**NO**	**CHECKED BY**	**DATE**
Waterproof membrane applied to shower areas prior to tiling?				
SHOWER INSTALLER	**YES**	**NO**	**CHECKED BY**	**DATE**
GIB Aqualine® walls must not be sealed or painted under where acrylic linings are to be installed.				
Ensure GIB Aqualine® is free from dust before installation of acrylic liners.				
Sealant applied to top edge of acrylic shower linings?				
SUPERVISOR	**YES**	**NO**	**CHECKED BY**	**DATE**
Sealant applied under penetration face covers?				

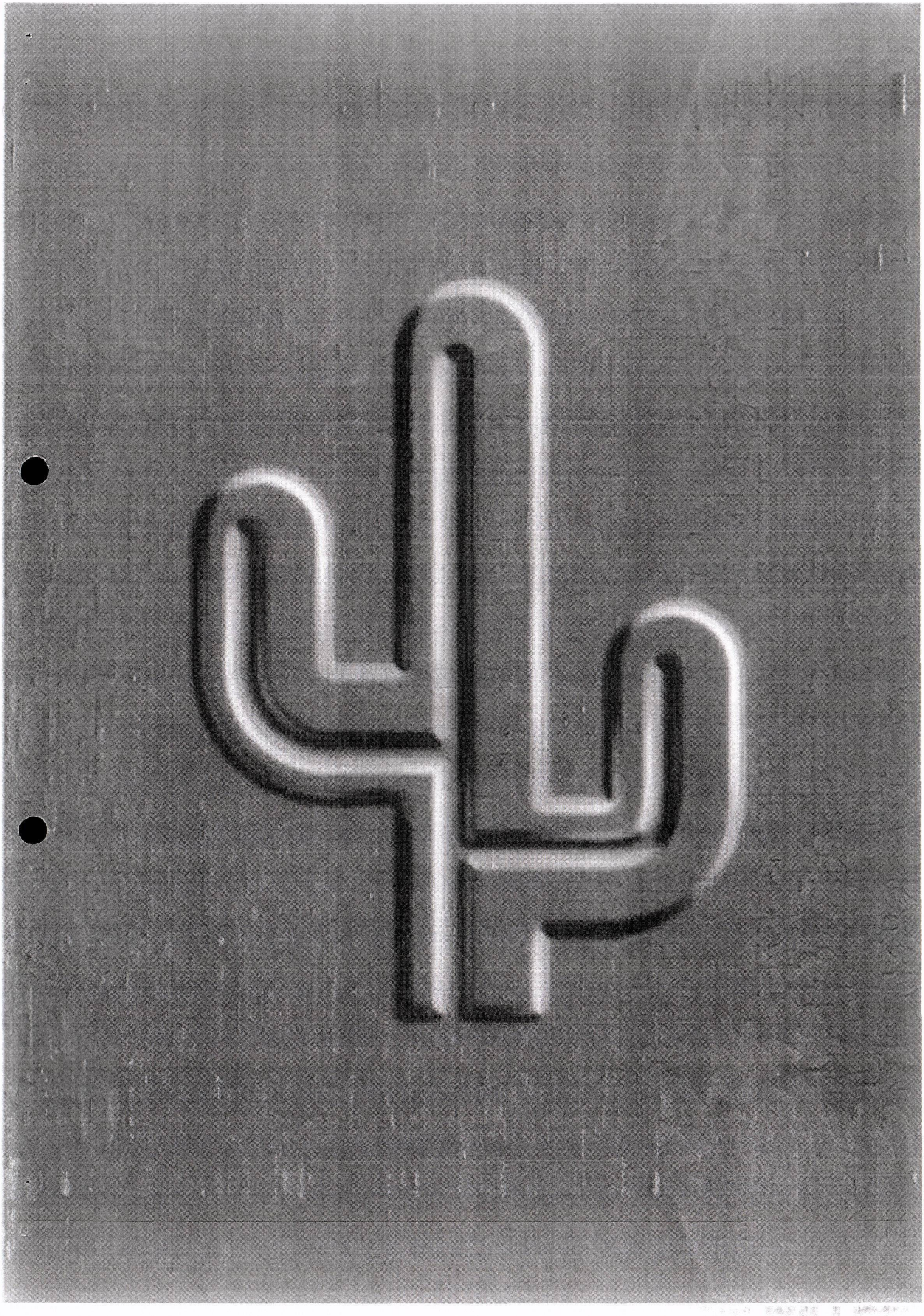

Copyright

Copyright © Winstone Wallboards 2007. All of the material contained in this brochure, including all text, tables, charts, graphs, drawings, fastener patterns and diagrams, are protected by copyright. These materials may not be reproduced, adapted or transmitted in any form by any process without the permission of Winstone Wallboards Limited.

Winstone Wallboards also reserves all other intellectual property rights in the materials contained in this brochure.

Trademarks

The names GIB®, GIB Fyreline®, GIB Ultraline®, GIB Braceline®, GIB Toughline®, GIB Noiseline®, GIB Aqualine®, GIB Nail®, GIB Tradeset®, GIB Plus 4®, GIB ProMix®, GIB® AquaMix, GIB-Cove®, GIB Lite Blue®, GIBFix®, Quiet Stud®, GIB Rail®, GIB Sound Barrier®, GIB Soundseal®, GIB Clip®, the colour mauve for GIB Toughline®, the colour blue for GIB Braceline®, the colour pink for GIB Fyreline® and the colour green for GIB Aqualine® are registered trademarks of Fletcher Building Holdings Limited.

GIB® Helpline – Call Free

0800 100 442

Free Facsimile

0800 229 222

E-mail

info@gib.co.nz

Internet Website

www.gib.co.nz

Auckland

PO Box 12256 Penrose. Telephone 0-9-633 0100.
Facsimile 0-9-633 0101.

Copyright © Winstone Wallboards Ltd. 2007

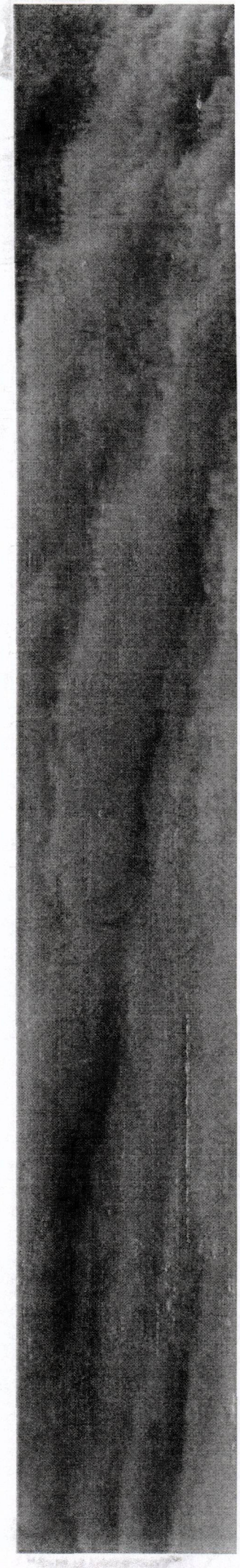

Winstone Wallboards Limited
37 Felix Street, PO Box 12256
Penrose, Auckland, New Zealand
Phone 64-9-633 0100, Facsimile 64-9-633 0101
Internet website: http://www.gib.co.nz
E-mail: info@gib.co.nz

GIB® Helpline: 0800 100 442
Facsimile: 0800 229 222

Pink® Batts® Building Insulation (Ceiling, walls & floors) — WARM

PRODUCT	R VALUE (m²K/W)	THICKNESS (mm)	PIECES PER BALE	PIECE SIZE (mm)	AREA PER BALE (m²)	COVERAGE PER BALE (m²)*
R1.8 Ceiling** •	1.8	75	26	1220x432	13.7	14.4
R2.2 Ceiling** •	2.2	94	24	1220x432	12.6	13.3
R2.6 Ceiling •	2.6	110	20	1220x432	10.5	11.0
Ultra™ R3.6 Ceiling •	3.6	155	14	1220x432	7.4	7.8
Ultra™ R4.6 Ceiling •	4.6	175	10	1220x432	5.3	5.7
R1.8 Wall** •	1.8	75	26	1140x580	17.2	19.6
R2.2 Narrow Wall •	2.2	94	22	1140x380	9.5	10.0
R2.2 Wall •	2.2	94	21	1140x580	13.9	15.8
Ultra™ R2.6 Wall •	2.6	90	15	1140x580	9.9	11.3
Ultra™ R2.8 Wall •	2.8	90	10	1140x580	6.6	7.5
Handypack R2.2 •	2.2	94	24	610x432	6.3	7.0
Masonry R0.5	0.5	19	1	15000x1220	18.3	18.3
Masonry R0.7	0.7	25	1	15000x1220	18.3	18.3
Masonry R0.9	0.9	30	1	15000x1220	18.3	18.3
Masonry R1.0	1.0	40	30	1220x580	21.2	22.1
Masonry R1.2	1.2	50	24	1220x580	17.0	17.7
CosyFloor® 450 R1.3 •	1.3	50	1	10000x420	4.2	4.6
CosyFloor® 600 R1.3 •	1.3	50	1	10000x570	5.7	6.2
CosyFloor® 450 R2.0 •	2.0	70	1	10000x420	4.2	4.6

* Coverage relates to standard structures and actual coverage may vary.
* * May not meet the requirements of the Building Code in the South Island or Central Plateau.

•

BRANZ Appraised
Appraisal No. 238 (2004)

Product Description

FBS-1 Glass Wool is an ICANZ registered reference and applies to Glass Wool which is confirmed to be bio soluble. The Glass Wool used in the manufacturing of Pink®Batts® acoustic and thermal insulation is classified as "FBS-1 Glass Wool".

Pink®Batts® Insulation is a bulk insulation designed specifically for the insulation of ceilings, walls and floors in houses and other buildings.

Pink®Batts® Insulation has been designed for installation in cavity construction at ambient temperatures and will friction fit between standard timber framing. If timber spacing is non-standard, Pink®Batts® Insulation can easily be cut to size.

Pink® Batts® Building Insulation (Ceiling, walls & floors) WARM

Physical Properties

Pink®Batts® Insulation is available in a range of thermal performance grades and several sizes designed to conform with common joist, truss and stud spacings.

Pink®Batts® CosyFloor® is available in two sizes and thermal performance grades to conform with common joist spacings.

The manufacturing process at Tasman Insulation New Zealand is continually quality controlled to produce product with an assured thermal resistance value.

Pink®Batts® Insulation is manufactured in plants with AS/NZS ISO9001:2000 certification.

Installation Instructions

Pink®Batts® installation instructions are contained on a separate data sheet. See contents.

Environmental & Health

The manufacture of Pink®Batts® Insulation involves a process which uses up to 80% recycled glass. The FBS-1 Glass Wool formulation used by Tasman Insulation New Zealand has recently been classified under European Union guidelines as biosoluble.

This means that in the unlikely event of glass fibres getting into the body they will dissolve rapidly and be expelled from the body.

Tasman Insulation NZ continues to recommend the use of simple protective equipment to stop dust from any source that may have settled in the work area from irritating eyes, nose or throat.

In addition IARC (International Agency for Research into Cancer, a division of the World Health Organisation) announced in October 2001 that FBS-1 Glass Wool as used for insulation has been classed Category 3, not classifiable as to its carcinogenic risk on humans. Category 3 also contains such product as tea, caffeine and hair colouring.

The Pink®Batts® Ultra® range has gained the Environmental Choice accreditation. Manufacturing ingredients, production systems, energy savings policies, recycling programmes and waste disposal methods are the criteria taken into account. For further information visit www.enviro-choice.org.nz

ENVIRONMENTAL CHOICE NEW ZEALAND

Licence No 2504017.
Thermal (resistive type) building insulants.

New Zealand Building Code (NZBC, B2, E3, F2, H1)

Pink®Batts® thermal insulation will satisfy the requirements of NZBC Clause B2.3.1a) (50 years), Pink®Batts® CosyFloor® will meet the provisions of NZBC B2.3.1b) and c) for 15 and 5 years respectively, for durability when used in dry, protected construction cavities. Pink®Batts® Insulation will meet the relevant requirements of NZBC F2 Hazardous Building Materials, and will assist buildings in meeting the relevant requirements of H1 Energy Efficiency and E3 Internal Moisture.

Acoustic Performance

Pink®Batts® insulation will perform as an acoustic material by providing cavity sound absorption and helping reduce sound transmission through walls, floors and ceilings. Tested results are available for absorption performance and as a component of tested acoustic wall, floor and ceiling structures.

It must be noted however any structure's acoustic performance will be greatly reduced by any penetrations or openings through it. This therefore makes acoustic treatment to exterior walls with doors and windows particularly difficult.

Pink® Batts® Building Insulation (Ceiling, walls & floors) ✱ WARM

Trussed Roof

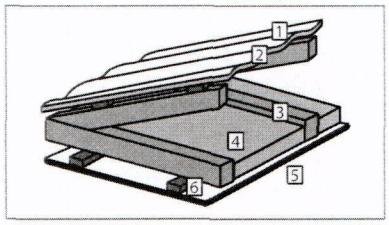

Minimum Total Structure Thermal Resistance

Pink®Batts® R1.8 = 2.2m² K/W *
Pink®Batts® R2.2 = 2.6m² K/W *
Pink®Batts® R3.2 = 3.3m² K/W *

1. Roof Cladding. Longrun Steel Roofing. 2. Flamestop®660 Roof Underlay. 3. Trusses (100x50) at 900mm centres. 4. Pink®Batts® Insulation. 5. Ceiling Lining. 6. Battens at 450mm centres (Minimum height 40mm).

Framed Roof

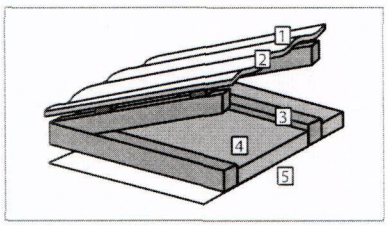

Minimum Total Structure Thermal Resistance

Pink®Batts® R2.2 = 2.0m² K/W *
Pink®Batts®Ultra™ R3.6 = 2.6m² K/W *
Pink®Batts®Ultra™ R4.6 = 3.4m² K/W *

1. Roof Cladding. Longrun Steel Roofing. 2. Flamestop® 660 Roof Underlay. 3. Frames (100x50) at 600mm centres Dwangs (75x50) at 900mm centres. 4. Pink®Batts® Insulation. 5. Ceiling Lining.

Skillion Roof

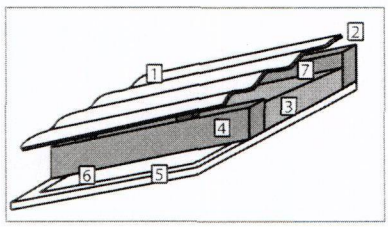

Minimum Total Structure Thermal Resistance

Pink®Batts® R1.8 = 1.9m² K/W *
Pink®Batts® R2.6 = 2.5m² K/W *
Pink®Batts®Ultra™ R3.6 = 3.1m² K/W *

1. Roof Cladding. Longrun Steel Roofing. 2. Flamestop® 660 Roof Underlay. 3. Pink®Batts® Insulation. 4. Rafters (900mm centres) – height as required. For insulation thickness + 25mm air gap to under side of Building Paper. Dwang (75x50) at 900mm centres. 5. Ceiling Lining. 6. Flamestop® 524 VapourBarrier (as required). 7. Air Gap of 25mm.

Skillion Roof (with exposed rafters)

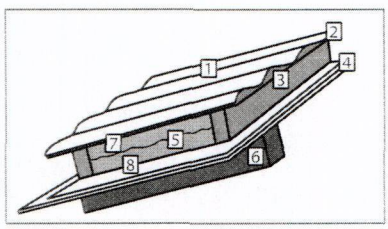

Minimum Total Structure Thermal Resistance

Pink®Batts® R1.8 = 2.0m² K/W *
Pink®Batts® R2.6 = 2.8m² K/W *
Pink®Batts® R3.2 = 3.3m² K/W *

1. Corrugated Iron. Longrun Steel Roofing. 2. Flamestop® 660 Roof Underlay. 3. Purlins (900mm centres) - height as required. For insulation thickness +25mm air gap to under side of Building Paper. 4. Ceiling Lining. 5. Pink®Batts® Insulation. 6. Rafter. 7. Air Gap of 25mm recommended between insulation and building paper. 8. Flamestop® 524 Vapour Barrier (as required).

*Refer TABLES ENERGY EFFICIENCY 1-3 (following page) for appropriate climate zone and type of wall. These figures are based on NZS 4218:1996.

N.B. Refer diagrams SKILLION ROOFS. The use of a vapour barrier (Flamestop® 524) is recommended for this construction method, to be fitted between the insulation and the ceiling lining.

Moisture

An air gap of at least 25mm should be maintained in skillion roofs, between the insulation and the building paper or underlay, to avoid wicking of condensed water. Providing ventilation in the roof space will also assist in minimising risk of condensation.

Wall Insulation - Residential Insulation

WARM

Timber Framed Wall

1. Top Plate
2. Pink®Batts® Wall Insulation
3. Flamestop® Building Paper
4. Studs (100x50) at 600mm centres
5. Two Dwangs
6. Internal Lining
7. Bottom Plate
8. Wall Cladding

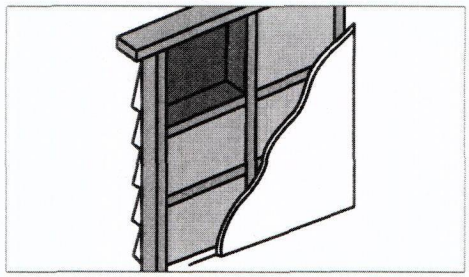

Wall Cladding / Insulation Combinations

Min. Total Structure Thermal Resistance

Pink®Batts® Wall Insulation	R1.8	R2.2	R2.6
Bevel Backed Timber Weatherboard	2.0	2.1	2.3
Rusticated / Shiplap Weatherboard	1.8	2.0	2.2
Sheet Cladding (Plywood, Fibre Cement)	1.7	1.9	2.1
Brick / Block Veneer	1.8	2.0	2.1
Stucco Finish on Solid Backing	1.7	1.9	2.1
Fibreboard Weatherboards	1.9	2.0	2.2
Metal Cladding / P.V.C. Cladding	1.8	2.0	2.2

* To obtain these results / cladding R-values are necessarily generic. For R-values of specific cladding types contact the supplier or manufacturer of the cladding material.

Special Note: Pink®Batts®Ultra™ R2.8 wall available (see Table Page 1.1)

To ascertain total wall structure R-value choose cladding type from column 1 in table and read across until the desired R-values matches up.

Energy Efficiency

Housing and Small Buildings

Where a solid construction achieves the minimum R-value requirements for non-solid construction, then it may be treated as a non-solid construction with respect to Table 1. Table 2 provides alternative minimum R-values for solid construction.

TABLE 1. NON-SOLID WALL

Building Thermal Envelope Component	Minimum R-Values	
	Climate Zone 1 & 2	Climate Zone 3
Roof	R 1.9	R 2.5
Wall	R 1.5	R 1.9
Floor	R 1.3	R 1.3
Minimum R-Values for Schedule Method		

TABLE 2. SOLID WALL

Building Thermal Envelope Component	Minimum R-Values	
	Climate Zone 1 & 2	Climate Zone 3
Roof (including glazing)	R 3.0	R 3.0
Wall	R 0.6	R 1.0
Floor (carpets or floor coverings are not included)	R 1.3	R 1.3
Solid Construction - Alternative Minimum R-Values for Schedule Method		

Large Buildings

Where floor area is more than 300m² with conditioned spaces.

TABLE 3.

Building Thermal Envelope Component	Minimum R-Values	
	Climate Zone 1	Climate Zone 2 & 3
Roof (including glazing)	R 1.9	R 1.9
Wall	R 0.3	R 1.2
Floor (carpets or floor coverings are not included)		R 1.3
R-Values for Schedule Method (WWR < 50%)		

ZONE 1: Comprises Coromandel District, Franklin District & All Districts North
ZONE 2: Comprises the Remainder of North Island Excluding Taupo District, Ruapehu District & Northern Part of Rangitikei District
ZONE 3: Comprises the Remainder of the Country ie. Taupo District, Ruapehu District, Northern Part of Rangitikei District, South Island and all Other Islands NOT in Zone 1.

This brochure supersedes all previous brochures. Tasman Insulation New Zealand retain the right to change products and specifications without prior notification. If a specification is critical to the end use, please consult Tasman Insulation New Zealand. Do not use this product in an application other than that detailed in this data sheet, without obtaining written advice from Tasman Insulation New Zealand. All product dimensions and performance claims are subject to any variation caused by normal manufacturing process and tolerances. This information is provided without prejudice to Tasman Insulation New Zealand standard terms and conditions of sale. Tasman Insulation is a Fletcher Building Company.

AUCKLAND: P.O. Box 12069, Penrose. Ph: (09) 579-2139. Fax: (09) 579-3806.
WELLINGTON: P.O. Box 51366, Tawa. Ph: (04) 232-1575. Fax: (04) 232-1354.
CHRISTCHURCH: P.O. Box 16000, Wornley. Ph: (03) 340-3054. Fax: (03) 340-4281.

FUJITSU HI-WALL

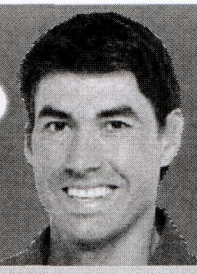

Units



ASTA09LC/12LC/18LC



ASTA24LC/30LC



Remotes



Outdoor Units



For ASTA9/12

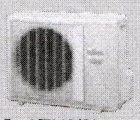

For ASTA18/24

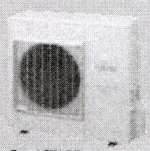

For ASTA30

AIR CONDITIONER FILTER FEATURES

Apple-catechin filter

Fine dust, invisible mould spores, and harmful micro organisms are absorbed onto the filter by static electricity, and further growth is inhibited and deactivated by the polypenol ingredient extracted from apples.

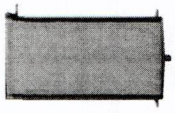

Long-life* Ion deodorization filter

The filter deodorizes by powerfully decomposing absorbed odours using the oxidizing filter and reducing effects of ions generated by the ultra-fine-particle ceramic. (*The filter can be used for approximately 3 years if it is washed under water to restore its surface action when it is dirty.)

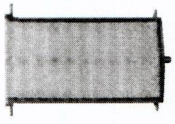

Easy maintenance

Easy maintenance and always clean. Troublesome maintenance has been made easy. Since the front panel is easy to remove, maintenance is also easy.

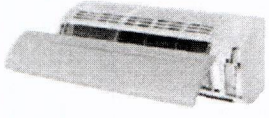



Inner drying operation

This model is equipped with an inner drying function. After the power is turned off, the dry operation starts inside the air conditioner. This prevents the growth of mould and bacteria inside the air conditioner.

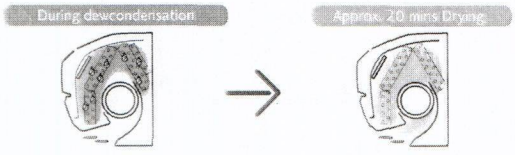

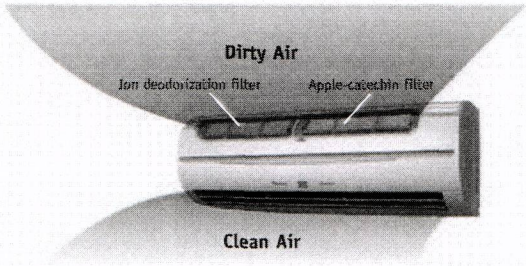

Deodorizing effect (Odour reduction rate)

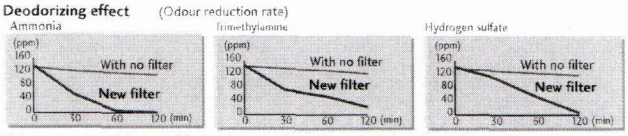

Testing organization : Environmental Sanitary Inspection Center Test method : Deodorization Test

All DC

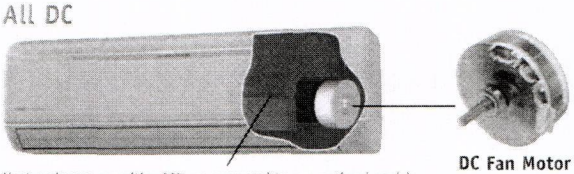

DC Fan Motor

Heat exchange capacities 20% up compared to conventional models

- **A DC Fan Motor**
- **B V-PAM control**
  V-PAM technology makes a compressor more powerful.
- **C DC scroll compressor**
  More compact compared with conventional model.

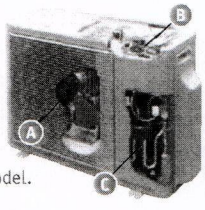

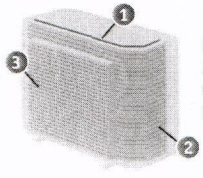

New 3-row heat exchange system

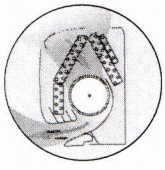

High efficiency
Large air flow and quiet operation by new air flow path

FUJITSU HI-WALL

Fujitsu General New Zealand Limited.
Level 1, 8-10 Fitzherbert Street, Petone, Wellington, New Zealand.
www.fujitsugeneral.co.nz • Email: contact@fujitsugeneral.co.nz



FUJITSU

SPECIFICATIONS

Type				INVERTER	INVERTER	INVERTER	INVERTER	INVERTER
Model No.			Indoor Unit	ASTA09LCC	ASTA12LCC	ASTA18LCC	ASTA24LCC	ASTA30LCC
			Outdoor Unit	AOTR09LCC	AOTR12LCC	AOTR18LCC	AOTR24LCC	AOTR30LCT
Reverse Cycle System				Yes	Yes	Yes	Yes	Yes
Cooling Capacity			Watts	2600	3500	5200	7400	8000
			BTU/h	8900	11900	17700	25300	27300
Range			Watts	500-3600	900-4300	900-5700	900-8000	2900-9000
			BTU/h	1700-12300	3100-14700	3100-19400	3100-27300	9900-30700
Heating Capacity			Watts	3600	4800	6250	8500	9000
			BTU/h	12300	16400	21300	29000	30700
Range			Watts	500-5300	900-6700	900-9100	900-10600	2200-11000
			BTU/h	1700-18100	3100-22900	3100-31000	3100-36200	7500-37500
Power Supply			Volts	240	240	240	240	240
Phase-Frequency			Ph- Hz	1-50	1-50	1-50	1-50	1-50
Power Supply Attachment				Indoor	Indoor	Indoor	Outdoor	Outdoor
Plug Size (If Applicable)			Amps	10	15	15	NA	NA
Interconnect cables - size			Qty - mm²	4 - 2.5	4 - 2.5	4 - 2.5	4 - 2.5	4 - 2.5
Rec. min. Power Cable size			mm²	2.5	2.5	2.5	4	4
Running Current	Cooling		Amps	3	4.1	7.3	10.4	11.7
	Heating		Amps	3.9	5.4	7.4	10.2	11.6
Input	Cooling		Watts	655	920	1720	2460	2660
	Heating		Watts	845	1240	1730	2420	2640
Moisture Removal			l/hr	1.3	1.8	2.8	3	3.4
E.E.R.	Cooling			3.963	3.801	3.022	3.011	2.989
C.O.P.	Heating			4.261	3.869	3.61	3.516	3.385
Star Rating	Cooling			6	6	4	4	4
	Heating			6	6	5	5	4.5
Fan Speeds				4	4	4	4	4
Air Circulation	High		l/s	165	176	194	305	305
Compressor Type				Rotary	Rotary	Rotary	Scroll	Rotary
Dimensions and Weights	I.U.	Height	mm	275	275	275	320	320
		Width	mm	790	790	790	998	998
		Depth	mm	215	215	215	228	228
		Net Weight	kg	9	9	9	14	14
	O.U.	Height	mm	540	540	578	578	830
		Width	mm	660	790	790	790	900
		Depth	mm	290	290	300	315	330
		Net Weight	kg	32	37	40	44	62
I.U Sound Pressure Level Quiet Mode			dBA@1m	21	21	27	32	32
I.U Sound pressure level Low Mode			dBA@1m	30	29	32	36	36
I.U Sound Pressure Level Med. Mode			dBA@1m	36	36	37	41	41
I.U. Sound Pressure Level High Mode			dBA@1m	41	42	42	47	47
O.U. Sound Pressure Level			dBA@1m	48	49	50	52	53
O.U. Sound Power Level			dBA	65	67	68	68	69
Refrigerant Type				R410A	R410A	R410A	R410A	R410A
Connection Pipe Sizes	Gas		mm	9.52	9.52	12.7	15.88	15.88
	Liquid		mm	6.35	6.35	6.35	6.35	9.52
Pre Charged Length				15	15	15	15	20
Maximum Pipe Length			Metre	20	20	20	30	50
Maximum Pipe Height			Metre	15	15	15	20	30
Pipe Connection Methods				Flare	Flare	Flare	Flare	Flare
Outdoor operating Temp	Cooling		Degrees C	-10 to 43	-10 to 43	-10 to 43	-10 to 43	-10 to 43
	Heating		Degrees C	-15 to 24	-15 to 24	-15 to 24	-15 to 24	-15 to 24

Body colour is white on all models. The heating method employed is the "Reverse Cycle Heating System" on all heating and cooling compatible models. Sound power level (cooling) is rated in accordance with AS 1217. Specifications and design subject to change without notice for further improvement. Please check with your dealer. MUST BE INSTALLED AND SERVICED BY ACCREDITED AIR CONDITIONING SPECIALIST. Recommended cable sizes are based on AS/NZS3000 and AS/NZS3008. Cooling only model specifications available upon request. Cooling/heating capacities are based on AS/NZS3823. (Cooling) Indoor temp. : 27°C DB/19°C WB Outdoor temp. : 35°C DB/24°C WB (Heating) Indoor temp. : 20°C DB Outdoor temp. : 7°C DB/6°C WB

EXPLANATION OF FEATURES

Moisture Removal
The computer effectively dehumidifies the air.

Up/Down Swing Flaps
The up/down flaps automatically swing to up and down.

Right/Left Swing Flaps
The right/left flaps automatically swing in either direction.

Double Swing Automatic
Complex swing action of flaps enables automatically to swing both horizontal and vertical directions.

Automatic Flaps
The position of the flaps is set automatically to match the operating mode. It is also possible to adjust the flaps using the remote control.

Auto Shut Flaps
The auto shut flaps close or open automatically when the unit stops or starts.

Automatic Air Flow Adjustment
The micro-computer automatically adjusts the air flow effectively to follow the changes of room temperature.

Auto Restart
In the event of a temporary power failure, the air conditioner will automatically restart in the same operating mode as before, once the power supply is restored.

Auto-Changeover
The unit automatically switches between heating and cooling modes based on your temperature setting and the room temperature.

Sleep Timer
The micro-computer gradually changes the room temperature automatically to afford a comfortable night's sleep.

Program Timer
This digital timer allows selection of one of four options.
ON, OFF, ON → OFF, or OFF → ON.

ON-OFF Timer
ON-OFF timer can be set to operate once.

Weekly Timer
Different on-off times can be set for each day.

Weekly + Setback Timer
Weekly + Setback timer can set temperature for two times spans and for each day of the week.

Connectable Distributing Duct
Conditioned air can be distributed by means of a distribution duct.

Connectable Fresh Air Duct
Duct connection port hole opening: Fresh air can be introduced through this opening.

Fresh air intake
Fresh air can be taken in by a fan which can be connected using UTD-ECS5A (option parts).

Washable Panel

Long-life Ion deodorization filter

Long-life photocatalytic deodorizing filter

Apple-catechin filter

Wasabi antibacterial electrostatic filter

Fastener Layouts – GIB® Standard Bracing Elements

MARCH 2006

For 10mm GIB® Standard Plasterboard and any other 10mm and 13mm GIB® plasterboard

32mm x 6g GIB® Grabber® Drywall Screws or 30mm GIB® Nails at 150mm centres to perimeter of bracing element

Single 32mm x 6g GIB® Grabber® Drywall Screws or 30mm GIB® Nails where sheets cross studs

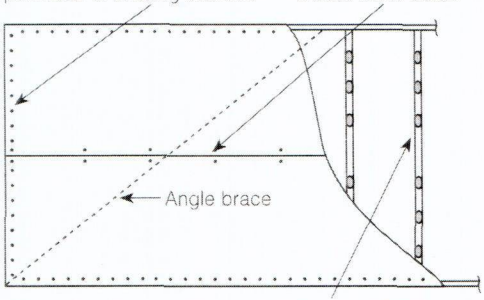

GS1a (lined one side) (Horizontal Fixing)

Daub of GIBFix® adhesive at 300mm centres to intermediate studs

32mm x 6g GIB® Grabber® Drywall Screws or 30mm GIB® Nails at 150mm centres to perimeter of bracing element

Single 32mm x 6g GIB® Grabber® Drywall Screws or 30mm GIB® Nails at 300mm centres

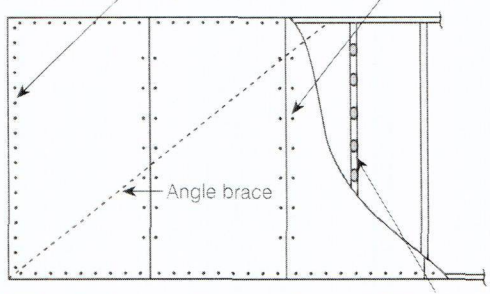

GS1a (lined one side) (Vertical Fixing)

Daub of GIBFix® adhesive at 300mm centres to intermediate studs and nogs

32mm x 6g GIB® Grabber® Drywall Screws or 30mm GIB® Nails at 150mm centres to perimeter of bracing element

Single 32mm x 6g GIB® Grabber® Drywall Screws or 30mm GIB® Nails where sheets cross studs

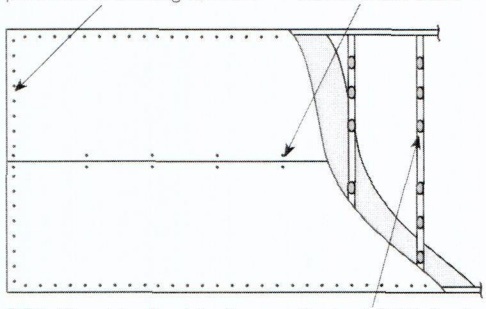

GS2 (lined both sides) (Horizontal Fixing)

Daub of GIBFix® adhesive at 300mm centres to intermediate studs

32mm x 6g GIB® Grabber® Drywall Screws or 30mm GIB® Nails at 150mm centres to perimeter of bracing element

Single 32mm x 6g GIB® Grabber® Drywall Screws or 30mm GIB® Nails at 300mm centres

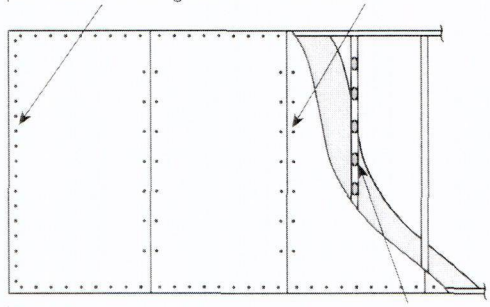

GS2 (lined both sides) (Vertical Fixing)

Daub of GIBFix® adhesive at 300mm centres to intermediate studs and nogs

Fixing the perimeter of a GIB® Standard Plasterboard bracing element

Fasteners are placed no closer than 12mm to the tapered (paper bound) machine edge of the GIB® plasterboard sheets. Fasteners are placed no closer than 18mm to a sheet end or a cut sheet edge.

For GIB® Standard bracing elements fasteners are placed at 150mm centres around the bracing element perimeter, starting at 50 and 150mm from the sheet corners.

Fastening pattern for GIB® Standard bracing elements

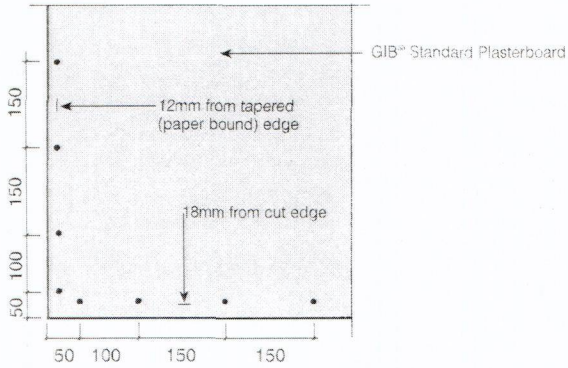

In order for GIB® systems to perform as tested, all components must be installed exactly as prescribed. Substituting components produces an entirely different system and may seriously compromise performance. Follow system specifications.

Copyright© Winstone Wallboards Ltd 2006. All of the material on this document, including all text, tables, charts, graphs, drawings, fastener patterns, diagrams and the EzyBrace™ Specification Numbering System (and the sub-components thereof), are protected by copyright.

Fastener Layouts – GIB Braceline® Bracing Elements MARCH 2006

For 10mm GIB Braceline®, 10mm and 13mm GIB Noiseline® and 13mm GIB Toughline®

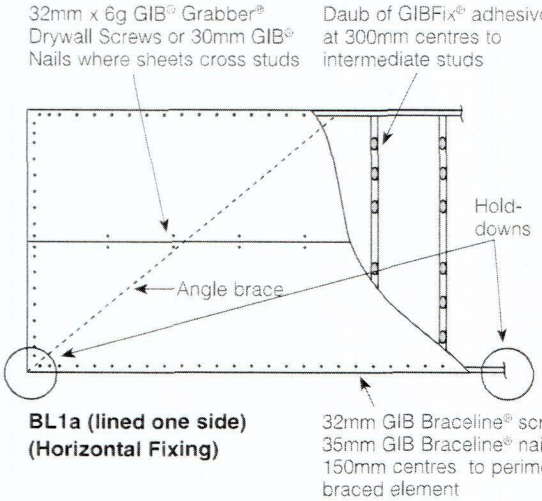

BL1a (lined one side) (Horizontal Fixing)

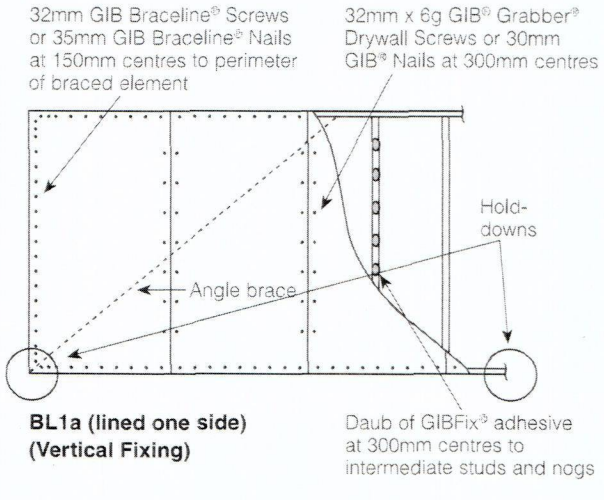

BL1a (lined one side) (Vertical Fixing)

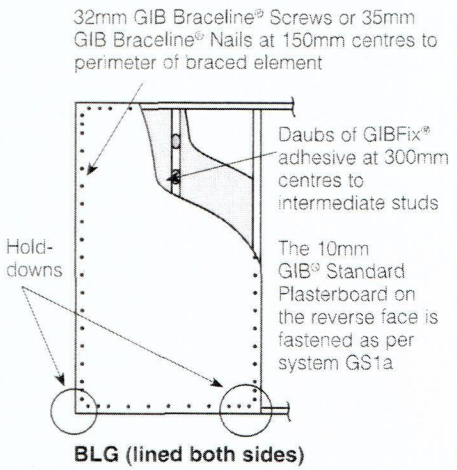

BLG (lined both sides)

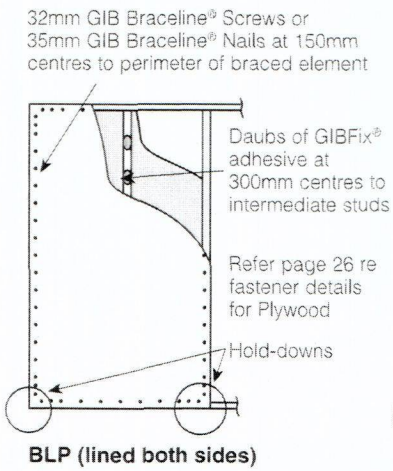

BLP (lined both sides)

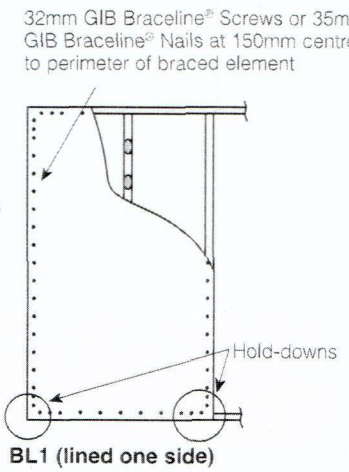

BL1 (lined one side)

Fixing the perimeter of a GIB Braceline® bracing element

Fasteners are placed no closer than 12mm to the tapered (paper bound) machine edge of the GIB® plasterboard sheets. Fasteners are placed no closer than 18mm to a sheet end or a cut sheet edge.

For GIB Braceline® systems, fasteners are placed at 150mm centres around the bracing element perimeter, starting at 50, 100 and 150mm from the sheet corners.

Fastening pattern for GIB Braceline® bracing elements

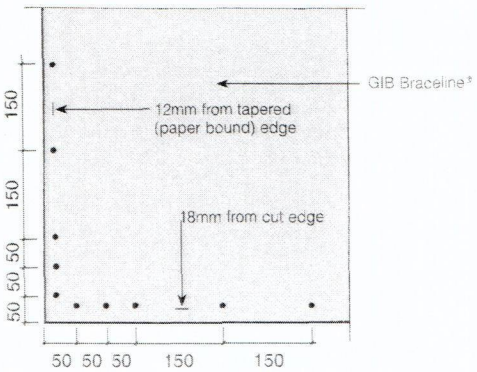

HURUNUI DISTRICT COUNCIL
Plans and specifications APPROVED.
In accordance with the Building Act 2004, clause 49(1) and the associated Building Regulations.
Signed .....

In order for GIB® systems to perform as tested, all components must be installed exactly as prescribed. Substituting components produces an entirely different system and may seriously compromise performance. Follow system specifications.

Copyright: Winstone Wallboards Ltd 2006. All of the material on this document, including all text, tables, charts, graphs, drawings, fastener patterns, diagrams and the EzyBrace™ Specification Numbering System (and the sub-components thereof), are protected by copyright.

Panel Hold-down Details

MARCH 2006

Concrete Floor – Internal / External Wall

Bottom plate is fixed using an M12 galvanised bolt set not less than 75mm into concrete and projecting sufficiently to allow for a 3mm washer and fully-threaded nut above the timber. Alternatively a proprietary fixing with equivalent capacity may be used.

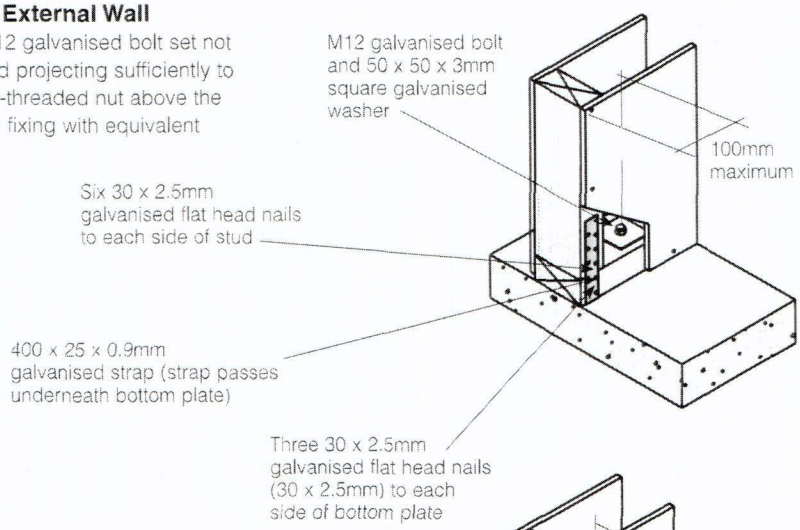

Timber Floor – Internal Wall

Bottom plate is fixed using a 12mm diameter minimum 150mm long galvanised coach screws.

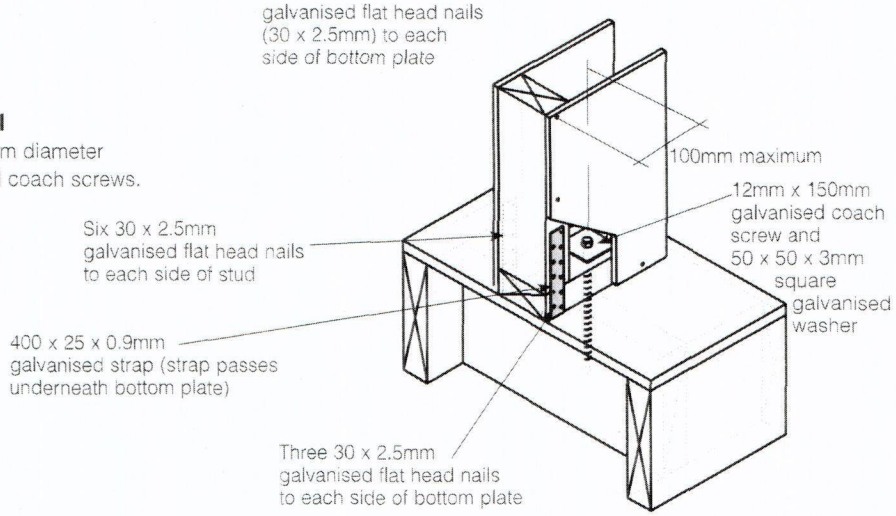

Timber Floor – External Wall Alternatives

Bottom plate is fixed using a 12mm diameter minimum 150mm long galvanised coach screw with 50 x 50 x 3mm square galvanised washer. Alternatively use the double strap detail shown on the right.

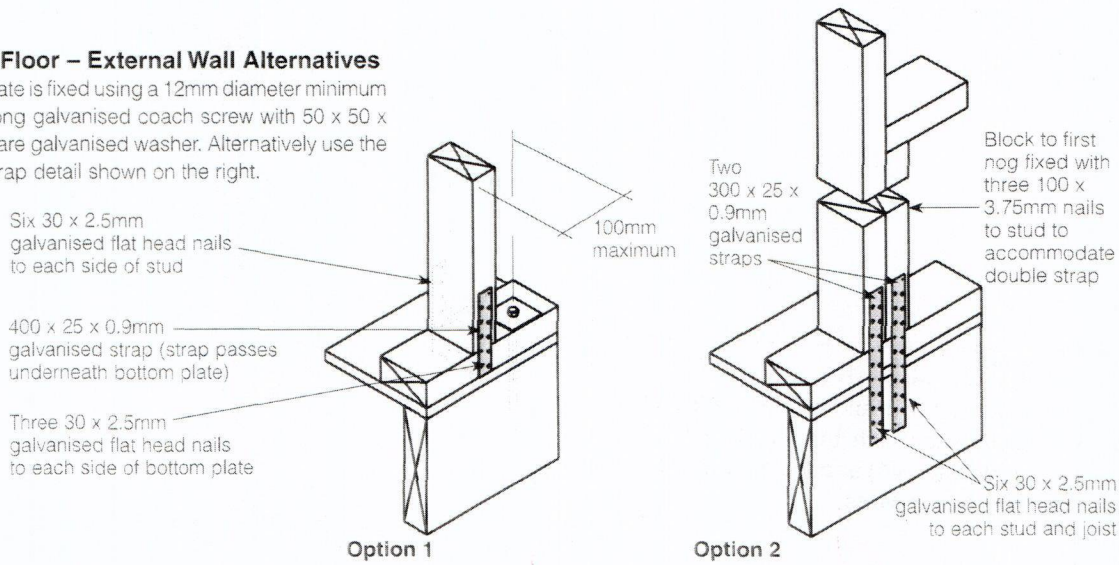

Notes:

Additional thickness and/or corrosion protection is required in exposed and sheltered applications. (Consult NZS 3604:1999).
To maintain a flush surface for the wall linings, it is recommended that hold down straps are checked into the framing.

In order for GIB® systems to perform as tested, all components must be installed exactly as prescribed. Substituting components produces an entirely different system and may seriously compromise performance. Follow system specifications.

Clarke and MANROSE

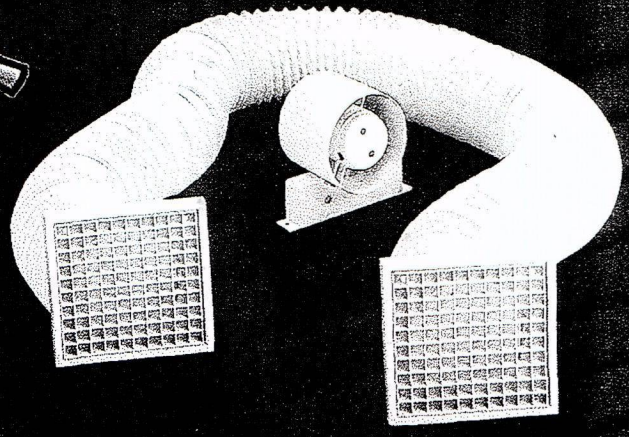

Providing ventilation solutions
letting your home breathe

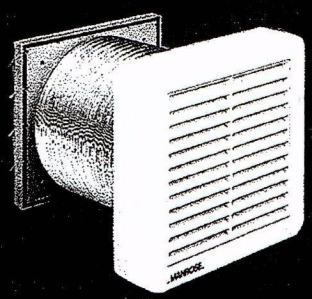



Check out our NEW Low Profile Series

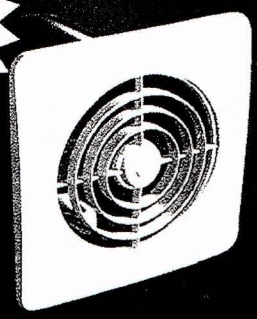

Ventilation Systems Selection Guide

CHOOSING A FAN: a step by step guide

Recommendations For Air Changes Per Hour

"Air Changes per hour" means an airflow rate sufficient to remove / replace the total volume of air in a given room a specified number of times each hour. Obviously fans will not be left running for an hour - a fact which is taken into consideration in the formula.

Guide only-individual requirements may vary

Application Description	Air Changes Per Hour
Bathrooms	5-10
Kitchens (Private)	10-15
Laundries	10-30
Toilets (Domestic)	2-3
Toilets (Office)	3-5
Toilets (Factory)	8-10
Kitchens (hotels, schools,etc)	15-20
Restaurants	6-10

Working out the <u>right</u> fan for the job:

1. Calculate the room volume in metres (L x W x H)
2. Multiply the room volume by the recommended air changes per hour for that room.
3. The sum is the total air changes required in cubic metres per hour.

Select a fan with the closest performance to this figure.

For Example:

What is the best fan for a bathroom that is 2.8m long by 2.8m wide with a ceiling height of 2.4m?

1. Calculate the volume of the bathroom: 2.8 x 2.8 x 2.4 = 18.8m^3
2. 5-10 air changes per hour are recommended for a bathroom. So multiply the room volume by 10: 18.8m^3 x 10 = 188m^3/hr.
3. The fan to choose for this bathroom would be a fan that performs at greater than 188m^3/hr. A fan that has a performance level of 313m^3/hr (eg. XP150S, or WF150MP) would do this job.

FAN SELECTION CHART

WHAT AFFECTS PERFORMANCE?

Simple facts:

1. **Fan size** (i.e.diameter of impeller & outlet)
2. **Ducts and the way they are installed**

Smaller ducts = greater resistance to airflow

Tight bends = greater resistance to airflow

The longer the duct and more bends = greater resistance to airflow Wrinkled ducting = greater resistance to airflow

Smoother, extended ducting = smooth, increased airflow

3. **Type of fan**

Whether the fan is a centrifugal or axial flow fan:

Centrifugal flow
Pressure developing fans which achieve good flow against the resistance created in a ducted system.
Particularly useful in venting areas like internal bathrooms/ laundries, multi-room extraction systems, heat-transfer systems, etc.

VS

Axial Flow
Suitable for wall, window and roof applications where they can extract directly to the outside.
Short duct runs are an option but the length of duct should be limited.
e.g. 100mm dia :up to 3m length
120mm dia :up to 4m length
150mm dia :up to 5m length

4. Location of the fan

Careful location of an extraction fan will ensure maximum air-flow through the room. Air extracted from a bathroom, for example, can be replaced with dry air drawn from an adjacent bedroom or hallway, in turn drawn from an open window or door. This ensures that fresh air is being drawn into the entire house at regular periods.

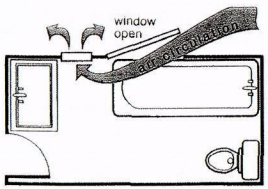

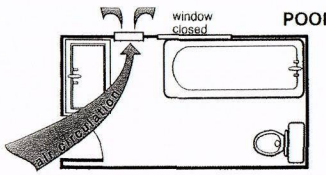

POOR CIRCULATION

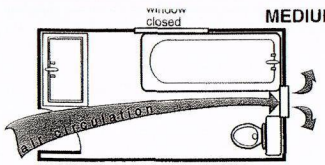

MEDIUM CIRCULATION

BEST CIRCULATION

Note:

A door vent may be used to supplement make-up airflow

Order Code: FAN0159

How to Use the Fan Selection Chart

1. Find your most suitable 'Application' on the left hand column (eg. Thru Wall).
2. Choose the 'Recommended Usages' for the room you wish to ventilate (eg. Bathroom, decide whether small, medium or large).
3. Follow that line across to identify the suggested fan 'Order Code'. Then 'Refer to Section' column indicates where you will find further product information eg. 'Thru Wall' - 'Small Bathroom' - 'FAN0080' - 'Section 2'

**check 'Important Notes' and 'Switching Options' for specific consideration.

Recommendation Regarding Bathroom Size:
Small bathroom: Up to 4 square metres floor area (eg. 2 metres x 2 metres), Medium bathroom: Up to 8 square metres floor area, Large bathroom: Above 8 square metres floor area

Application	Recommended Usages ( ) Bathroom	W/C	Laundry	Kitchen	Duct Size (mm)	Rec. Max. Duct Length	Manuf Model	Order Code	Refer to Section	Notes
Thru Wall 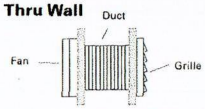		●	●		100	400mm *(supplied)*	XP100S	FAN0053	2	(LV)(2)
	●(small)	●	●		120	400mm *(supplied)*	XP120S	FAN0080	2	(LV)(2)
	●(medium/large)			●	150	400mm *(supplied)*	XP150S	FAN0135	2	(LV)(2)
Window Fan 		●	●		100	n/a	WF100P	FAN0021	5	(LV)(3)
	●(any)			●	150	n/a	WF150MP	FAN0110	5	(LV)(3)
In-Duct Fan Kits 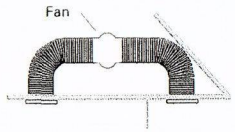		●	●		100	3 metres (supplied)	SF100S	FAN0017	3	(2)
	●(small)	●	●		120	4 metres (supplied)	SF120S	FAN0064	3	(2)
	●(small/medium)	●	●		100	12 metres (3m supplied)	SF200S	FAN0328	3	(2)
	●(small/medium)	●	●		100	12 metres (3m supplied)	SHOWERLITE	FAN0420	3	(2)
	●(small/medium)	●	●		100	12 metres (6m supplied)	PROSERIES 100	FAN0622	3	(2)
	●(any)		●	●	150	5 metres (supplied)	SF150S	FAN0101	3	(2)
	●(any)		●	●	150	5 metres (supplied)	SFLP150S	FAN0618	3	(2)
	●(any)		●	●	150	12 metres (9m supplied)	PROSERIES 150	FAN0624	3	(2)
Ceiling Mounted Fans  NB: Order Codes are FAN only	●(small)	●	●		120	4 metres	XF120S	FAN0072	1	(LV)(1)
	●(any)	●	●		100	12 metres	FFCF234S	FAN0038	7	(1)
	●(any)		●	●	150	5 metres	XF150S	FAN0120	1	(LV)(1)
	●(any)		●	●	150	6 metres	XFLP150SS	FAN0594	1	(LV)(1)
	●(any)		●	●	150	6 metres	XFLP150CS	FAN0609	1	(LV)(1)
Heat/Fan/Light units 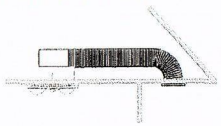	●(small, medium)				100	6 metres (3m supplied)	Heat 'n Vent 2	FAN0537	6	(2)
	●(medium/large)				100	6 metres (3m supplied)	Heat 'n Vent 4	FAN0538	6	(2)
	●(medium/large)				100	6 metres (3m supplied)	Light 'n Vent 1	FAN0539	6	(2)
Thru Roof Exhaust Systems (Fan incorporated in the cowl) 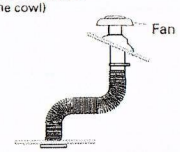	●(any)		●	●	150	12 metres	Smartvent - Hyper	DCT0189	8	(2)
	●(any)		●	●	150	12 metres	Smartvent - Ultra	FAN0535	8	(2)

Notes

(LV) Window, thru wall, ceiling fans mounted directly over a bath or shower tray must be LOW-VOLTAGE type. Refer section 5 for Wall/Ceiling types. Ask supplier for LOW-VOLTAGE Window fans if required.
(1) Fan only. Purchase duct and grille/s separately. Note 'Duct Diam' and select duct size (adaptor may be required) and grille size accordingly from 'Accessory Components' section.
(2) These products supplied in 'kit' form with ducting/grilles/fan.
(3) Requires circular hole cut in window. Hole diameters: WF100-120mm, WF150-184mm. Glazier cutting recommended.

AXIAL FLOW FANS

The models listed are **STANDARD** models (normally switched from a light switch). Other model options are available, these are detailed below and listed in purple circles under each category.

- **Timer**: Fans incorporate a timer which will run on for up to 20 mins after you leave the room.
- **Pull cord**: Pull cord switch used rather than connection to the light switch
- **PIR**: Motion sensor switch is incorporated inot the fan. This switched the fan on when you enter the room and the built-in timer keeps the fan running for up to 20 minutes after you leave the room. (Not availble on all models)

1. CEILING OR WALL MOUNTED FANS

Please note: [ ] **Denotes our new range of Low profile models**

Standard Range

- 30mm fascia

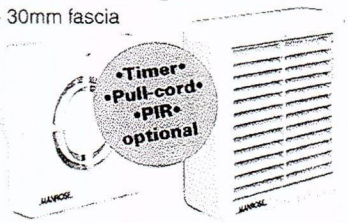

Duct Size	Manuf. Model	Switching Method	Performance (in free air)	Order Code
100mm	XF100S	Standard	23l/s, 85m³/hr	FAN0046
120mm	XF120S	Standard	36l/s, 130m³/hr	FAN0072
120mm	XFLP120SS	Square Standard	36l/s, 130m³/hr	FAN0589
120mm	XFLP120CS	Circular Standard	36l/s, 130m³/hr	FAN0604
150mm	XF150S	Standard	87l/s, 313m³/hr	FAN0120
150mm	XF150A	Standard (Auto Shutter)	87l/s, 313m³/hr	FAN0121
150mm	XFLP150SS	Square Standard	87l/s, 313m³/hr	FAN0594
150mm	XFLP150CS	Circular Standard	87l/s, 313m³/hr	FAN0609

Low Profile Range

- 10mm fascia

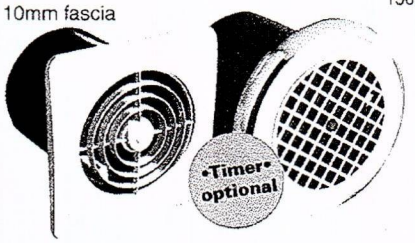

Please note: If these Low Profile fans are mounted in the wall, you will need a minimum 110mm wall thickness.

2. THRU WALL FAN KITS

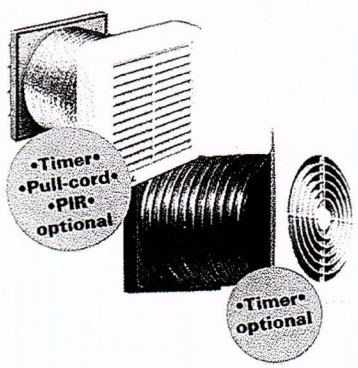

Duct Size	Manuf. Model	Switching Method	Performance (in free air)	Order Code
100mm	XP100S	Standard	23l/s, 85m³/hr	FAN0053
120mm	XP120S	Standard	36l/s, 130m³/hr	FAN0080
120mm	XPLP120SS	Square Standard	36l/s, 130m³/hr	FAN0614
120mm	XPLP120CS	Circular Standard	36l/s, 130m³/hr	FAN0733
150mm	XP150S	Standard	87l/s, 313m³/hr	FAN0135
150mm	XP150A	Standard (Auto Shutter)	87l/s, 313m³/hr	FAN0136
150mm	XPLP150SS	Square Standard	87l/s, 313m³/hr	FAN0621
150mm	XPLP150CS	Circular Standard	87l/s, 313m³/hr	FAN0736

Please note: The Low Profile Thru Wall Kits are only suitable for use where the wall thickness is a minimum of 110mm.

3. SHOWER FAN KITS

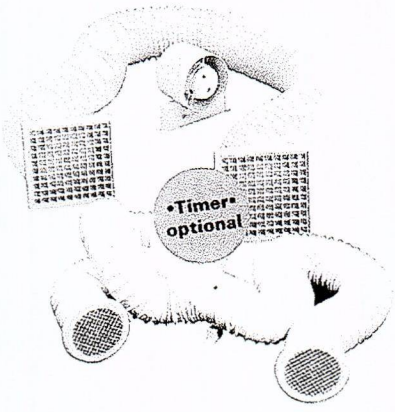

Duct Size	Manuf. Model	Switching Method	Performance (in free air)	Order Code
100mm	SF100S	Standard	23l/s, 85m³/hr	FAN0017
100mm	SF200S	Standard	31l/s, 108m³/hr	FAN0328
100mm	Showerlite	Standard	31l/s, 108m³/hr	FAN0420
100mm	Pro Series 100	Standard	49l/s, 175m³/hr	FAN0622
120mm	SF120S	Standard	36l/s, 130m³/hr	FAN0064
120mm	SFLP120S	Standard	36l/s, 130m³/hr	FAN0616
150mm	SF150S	Standard	87l/s, 313m³/hr	FAN0101
150mm	SF150A	Standard (Auto Shutter)	87l/s, 313m³/hr	FAN0099
150mm	SFLP150S	Standard	87l/s, 313m³/hr	FAN0618
150mm	Pro Series 150*	Standard	115l/s, 415m³/hr	FAN0624

* Note: Pro Series 150 is a complete two location extraction system

4. LOW VOLTAGE FANS...for use in shower or bath area

Ceiling or wall mounting. Suitable for installation in Damp Areas, Zones 1,2, 3. Mounting height should be above shower rose level.

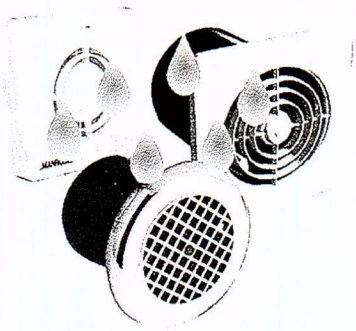

Duct Size	Manuf. Model		Performance (in free air)	Order Code
100mm	XF100LV		23 l/s, 85 m³/hr	FAN0044
120mm	XF120LV		36 l/s, 130 m³/hr	FAN0071
120mm	XFLP120SLV	Square	36 l/s, 130 m³/hr	FAN0591
120mm	XFLP120CLV	Circular	36 l/s, 130 m³/hr	FAN0606
150mm	XF150LV		87 l/s, 313m³/hr	FAN0119
150mm	XFLP150SLV	Square	87 l/s, 313 m³/hr	FAN0596
150mm	XFLP150CLV	Circular	87 l/s, 313 m³/hr	FAN0611

Low Voltage models are also available in Thru Wall Kits, for order codes please ask your local supplier.

Please note that the Low Profile Thru Wall Kits require a minimum wall thickness of 110mm

In addition to the selected low voltage fan, a fan isolating transformer is required.

Isolating transformer	230/12VAC	FAN0152

5. WINDOW FANS

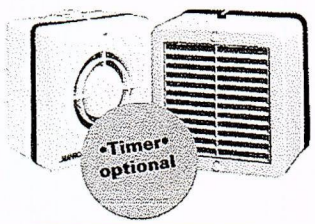

Duct Size	Manuf. Model	Switching Method	Performance	Order Code
100mm	WF100P	Pullcord	23l/s, 85m³/hr	FAN0021
150mm	WF150MP	Pullcord (Manual Shutter)	87l/s, 313m³/hr	FAN0110
150mm	WF150AP	Pull-Cord (Auto Shutter)	87l/s, 313m³/hr	FAN0107

CENTRIFUGAL FLOW FANS

6. HEAT/FAN/ LIGHT UNITS ...complete with ducting & grilles

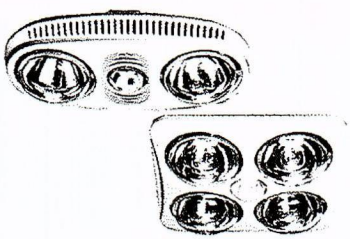

Duct Size	Manuf. Model	Switching Method	Duct Supplied	Performance*	Order Code
100mm	Heat 'n Vent 2	Standard	3m	35l/s, 126m³/hr	FAN0537
100mm	Heat 'n Vent 4	Standard	3m	41l/s, 148m³/hr	FAN0538
100mm	Light 'n Vent 1	Standard	3m	51l/s, 184m³/hr	FAN0539

* Note: Performance stated is with 3 metres of duct & one bend (normal installation)

7. CENTRIFUGAL WALL & CEILING FANS



Duct Size	Manuf. Model	Switching Method	Max. Duct Length	Performance	Order Cod
100mm	FFCF234S	Standard	12m	28l/s, 45l/s, 65l/s	FAN0038
100mm	SMCF234S	Standard	12m	28l/s, 45l/s, 65l/s	FAN0504
100mm	CF200S	Standard	12m	31l/s, 110m³/hr	FAN0041

8. THRU-ROOF FAN KIT

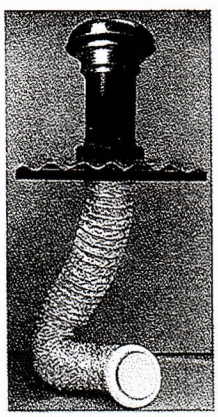

An ideal product for bathroom steam extraction, cafetaria smoke extraction, etc. This kit includes all components to complete the installation, with the exception of a silicon sealant for the underside of the roof flashing. Electrical connection will require a suitable junction box for wiring termination.

Smartvent Hyper (80l/s, 288m³/hr)..... .....DCT0189
Smartvent Ultra (130l/s, 468m³/hr.)..... .....FAN0535

Fan incorporated in the cowl
Very quiet operation

9. THRU-ROOF KIT

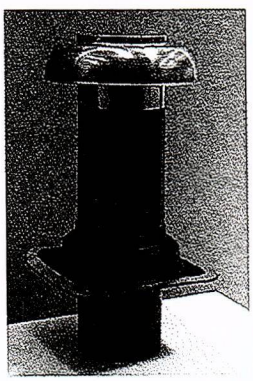

The General Purpose Thru Roof Kit is an ideal way to vent through the roof. The kit contains roof cowl and tubing, Dektite and approved fastenings, and metal fastening bracket.

General Purpose 150mm Thru-roof Exhaust Kit
.....DCT0172

ACCESSORY COMPONENTS

10. ALUDUCT DUCT...fully flexible

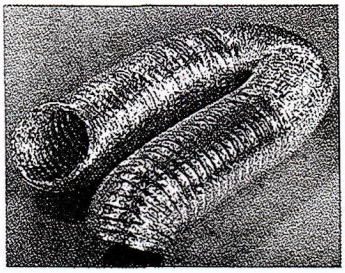

Spiral wire reinforced laminate construction. Properties include: vapour-proof, fire resistant, aluminium inner/aluminium outer, non collapsing, non rotting, retains extended length, temp. range -30ºC to 140ºC, silver finish

100mm diameter x 3m DCT0328
120mm diameter x 3m DCT0329
150mm diameter x 3m DCT0330

Complies with all NZ Building Code fire rating requirements

11. PVC DUCT...fully flexible

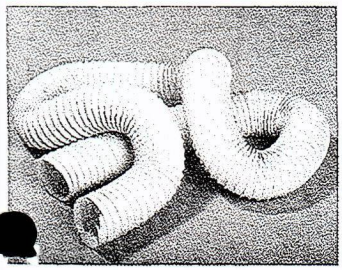

Spiral wire reinforced PVC construction. Properties include: fire retardant, non collapsing, non rotting, vapour-proof, temp. range -6ºC to 50ºC, white finish

100mm diameter x 3m DCT0336
120mm diameter x 4m DCT0337
150mm diameter x 5m DCT0338

12. WALL/CEILING GRILLES

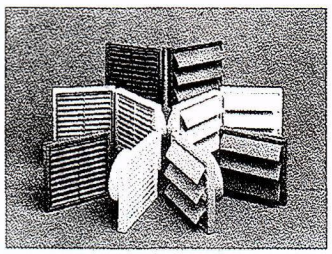

FIXED LOUVRE GRILLES
100mm white fixed louvre DCT0025
120mm white fixed louvre DCT0041
150mm white fixed louvre DCT0063

GRAVITY SHUTTER GRILLES
100mm white gravity shutter.... DCT0029
120mm white gravity shutter.... DCT0044
150mm white gravity shutter.... DCT0066

also available in grey and terracotta.

EGGCRATE

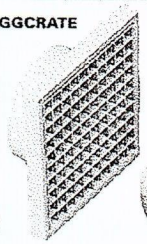

LOW PROFILE

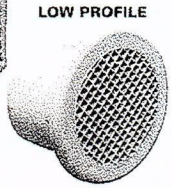

EGGCRATE GRILLES
100mm white eggcrate..... DCT0375
120mm white eggcrate DCT0472
150mm white eggcrate DCT0473

LOW PROFILE GRILLES
100mm white low profile DCT1089
120mm white low profile DCT1090
150mm white low profile DCT1067

also available in gold and chrome

13. WEATHERPROOF COWLS

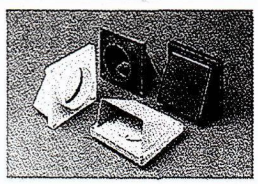

100mm diameter DCT0018
120mm diameter..... DCT1030
150mm diameter DCT1031

14. BACKDRAUGHT SHUTTERS

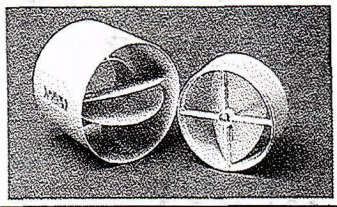

100mm diameter FAN0213
120mm diameter..... DCT0036
150mm diameter DCT0209

15. FAN TIMER

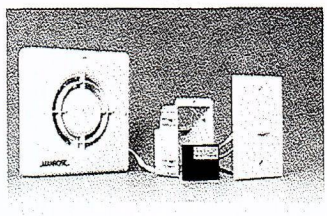

An accessory timer which can be fitted to most STANDARD fan models to keep the fan running for up to 7 minutes after you leave the room.
Easily fitted into the light switch flush box, or can be fitted at the fan.

TIME-AIR timer..... FAN0372

16. OTHER ACCESSORIES



DOOR VENT
Fit to internal doors to allow make-up or replacement air into the room.

455mm x 90mm x 33mm (min) door thickness..... FAN0159

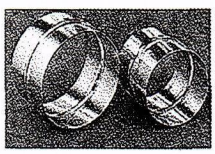

DUCT CONNECTORS

STRAIGHT DUCT CONNECTORS
100mm Plastic connector..... DCT0159
120mm Metal connector DCT0037
150mm Metal connector DCT0059
200mm Metal connector DCT0071



Y BRANCH CONNECTORS
100mm/100mm/100mm DCT0023
120mm/120mm/120mm DCT0038
150mm/150mm/150mm DCT0091

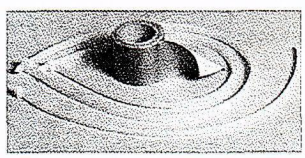

DUCT FASTENERS
Ducting strap 100mm diam .. FAN0274
Ducting strap 120mm diam .. FAN0281
Ducting strap 150mm diam .. FAN0282
Duct Tape 48mm x 5m DCT0173

250V

Securimax ©

Securimax Limited

Distributors for **Manrose Manufacturing Limited** in New Zealand.

Securimax Limited also distribute:

Friedland

maxvent ventilation solutions

Smartlite

Head Office: 5 Carmont Place, Mt Wellington,
PO Box 14-347, Panmure, Auckland, New Zealand
Tel: 09-259 1660, Fax: 09-259 1661
Email: sales@securimax.co.nz
Website: www.securimax.co.nz
Christchurch Branch: Unit 4 Elms Court, 142 Ferry Road
Tel: 03-365 0727, Fax: 03-365 0307

For further technical information telephone Auckland 09-259 1660
Securimax reserves the right to alter technical specifications without notice

Dealers Stamp:

PUB0076 ISS:05 07/02

HURUNUI DISTRICT COUNCIL

These plans and specifications must be read with the conditions attached to the Building Consent.

All Construction work and materials used shall comply with the New Zealand Building Code, notwithstanding any inconsistencies which may occur in the drawings and specifications.

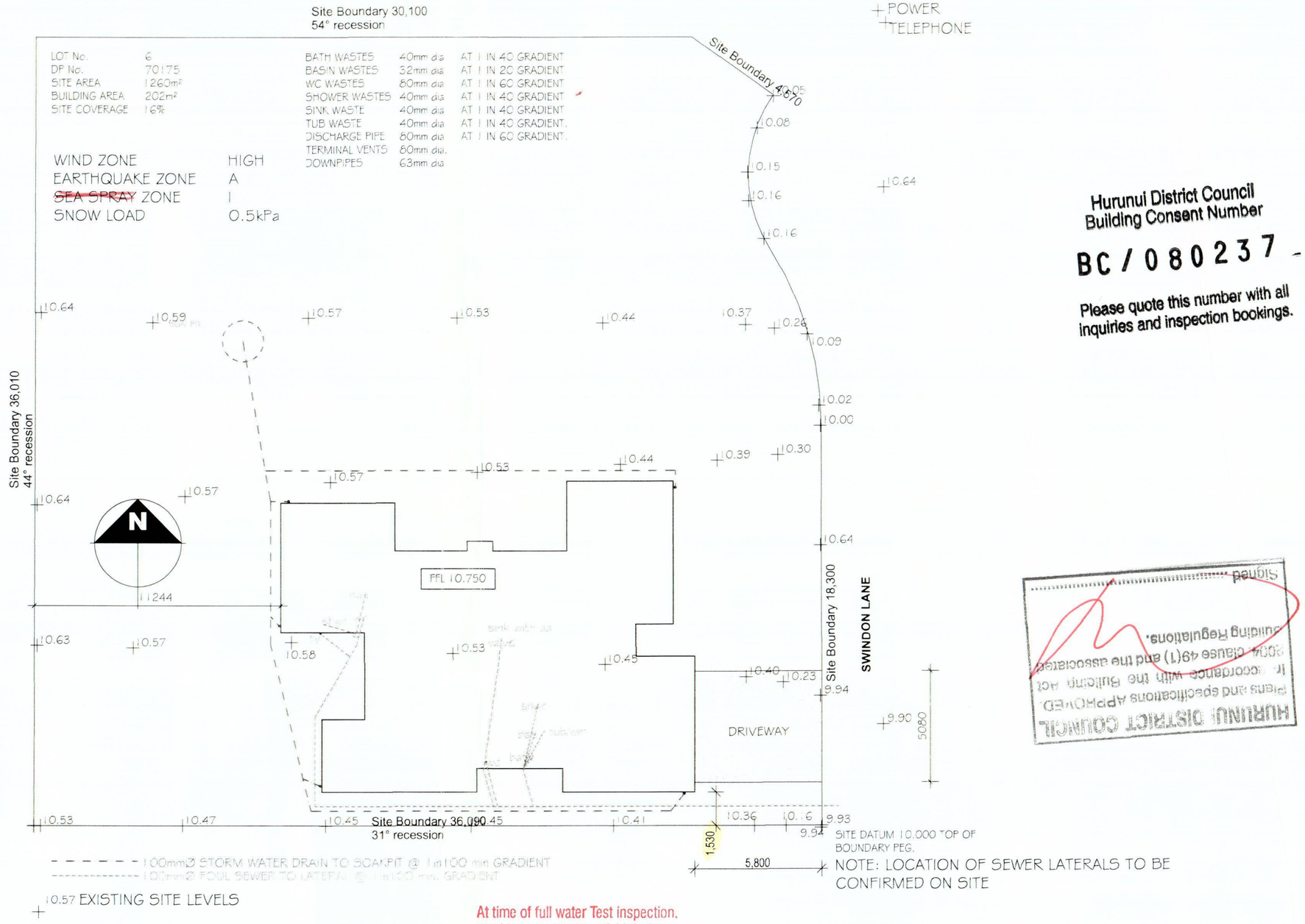

Hurunui District Council
Building Consent Number

BC / 080237 -

Please quote this number with all inquiries and inspection bookings.

HURUNUI DISTRICT COUNCIL
Plans and specifications APPROVED.
In accordance with the Building Act 2004 clause 49(1) and the associated Building Regulations.
Signed

At time of full water Test inspection, provide an accurate as laid drainage plan to Council Offficer.

mikegreerhomes LTD © Mike Greer Homes 478 Moorhouse ave (03) 354 0166 www.mikegreerhomes.co.nz	job title: *Baxter & Thomson House*	drawing title: *Site Plan*	legal description: *Lot 6 DP 70175* *7 Swindon Lane* *Amberley*	Notes *SUBJECT TO COUNCIL APPROVAL *ALL MEASUREMENTS TO BE CONFIRMED ON SITE BY CONTRACTOR PRIOR TO THE COMMENCEMENT OF WORK	Scale:*1:200* Version: Date of issue: *May 2008*	Job #: N1019 sheet: *A01* of: *10*

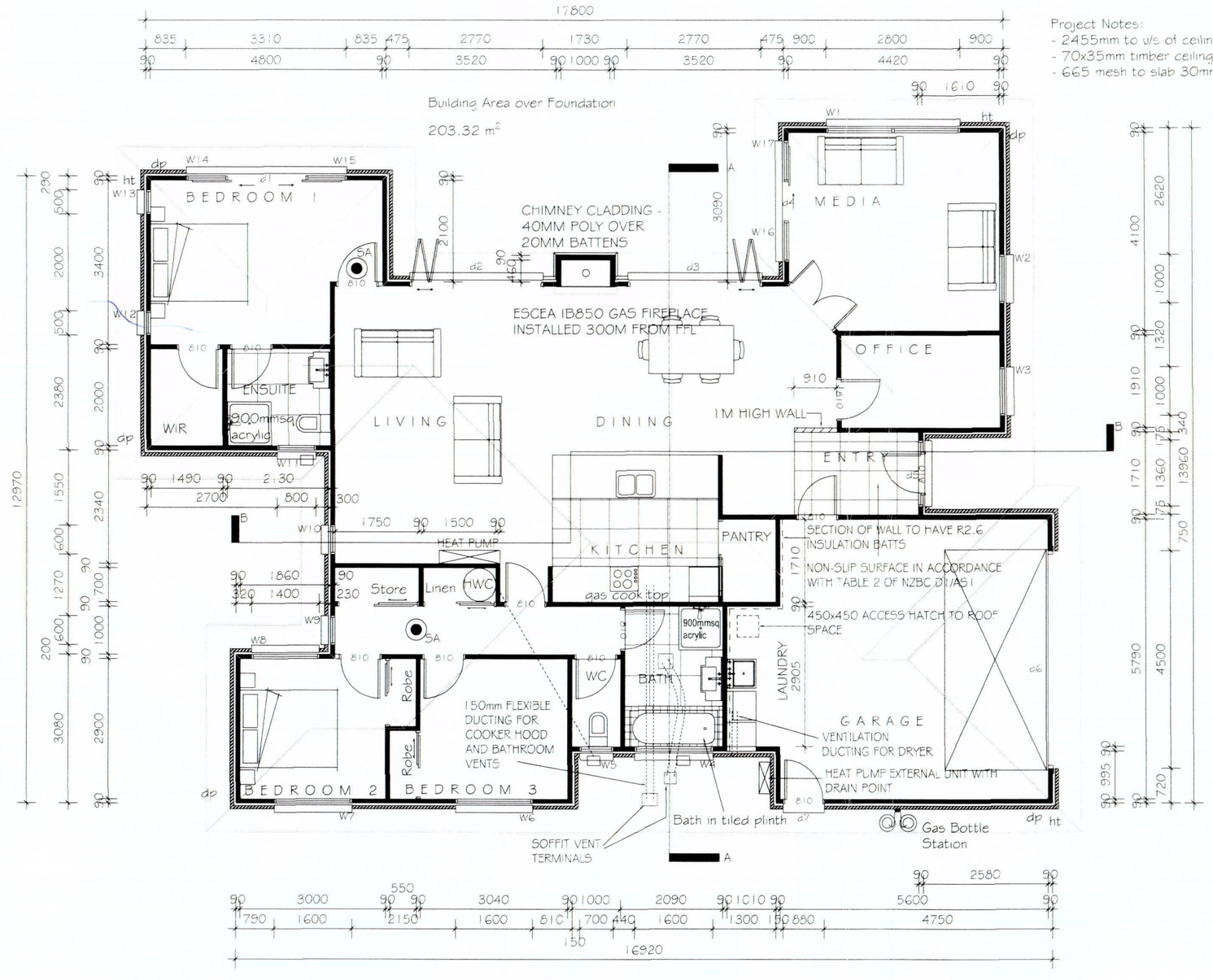

Project Notes:
- 2455mm to u/s of ceiling battens
- 70x35mm timber ceiling battens used throughout
- 665 mesh to slab 30mm min cover

NZ Building Code G4/AS1 Natural Ventilation. Provide openable building elements (provision to be fixed in open position) of a net area of no less than 5% of the floor area.

NZ Building Code G7/AS1 Natural Light. A window area of no less than 10% of the floor area.

WINDOW SCHEDULE				
WINDOW No.	WIDTH	HEIGHT	AREA	OPENING
1	2800	2060	5.8m²	3.6m²
2	1000	2060	2.1m²	0.958m²
3	1000	2060	2.1m²	0.958m²
4	1600	1200	1.9m²	0.877m²
5	700	1200	0.8m²	0.364m²
6	1600	1200	1.9m²	0.877m²
7	1600	1200	1.9m²	0.877m²
8	1400	1200	1.7m²	0.763m²
9	600	2060	1.2m²	0.430m²
10	600	2060	1.2m²	0.430m²
11	800	1200	1m²	0.421m²
12	500	1200	0.6m²	0.250m²
13	500	1200	0.6m²	0.250m²
14	845	2060	1.7m²	0.514m²
15	845	2060	1.7m²	0.514m²
16	845	2060	1.7m²	0.514m²
17	845	2060	1.7m²	0.514m²

NOTE:
BATHROOM AND EN-SUITE TO HAVE UNDERFLOOR HEATING.

DOOR SCHEDULE			
DOOR No.	FRAME WIDTH	FRAME HEIGHT	DESCRIPTION
1	1620	2060	FULL HEIGHT SAFETY GLAZED DOUBLE RANCH SLIDER
2	2770	2060	FULL HEIGHT SAFETY GLAZED BIFOLD
3	2770	2060	FULL HEIGHT SAFETY GLAZED BIFOLD
4	1620	2060	FULL HEIGHT SAFETY GLAZED SINGLE RANCH SLIDER
5	1360	2060	SOLID CORE PAINT GRADE HINGED DOOR WITH SIDELIGHTS.
6	4500	2060	COLOURSTEEL SECTIONAL RIBLINE GARAGE DOOR
7	880	2060	FULL HEIGHT SAFETY GLAZED HINGED

HURUNUI DISTRICT COUNCIL
Plans and specifications APPROVED.
In accordance with the Building Act 2004, clause 49(1) and the associated Building Regulations.
Signed .....

mikegreer homes LTD
© Mike Greer Homes
478 Moorhouse ave
(03) 354 0166
www.mikegreerhomes.co.nz

job title: *Baxter & Thomson House*

drawing title: *Floor Plan*

legal description:
Lot 6 DP 70175
7 Swindon Lane
Amberley

Notes
*SUBJECT TO COUNCIL APPROVAL
*ALL MEASUREMENTS TO BE CONFIRMED ON SITE BY CONTRACTOR PRIOR TO THE COMMENCEMENT OF WORK

Scale: *1:100*
Version:
Date of issue: *May 2008*

Job #: N1019
sheet: *A02*
of: *10*

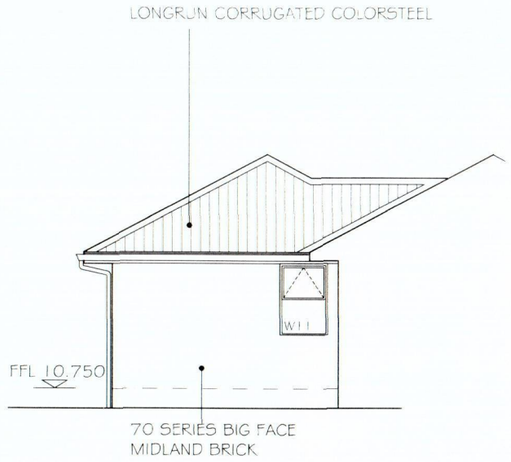

SOUTH ELEVATION
(IN RECESS)

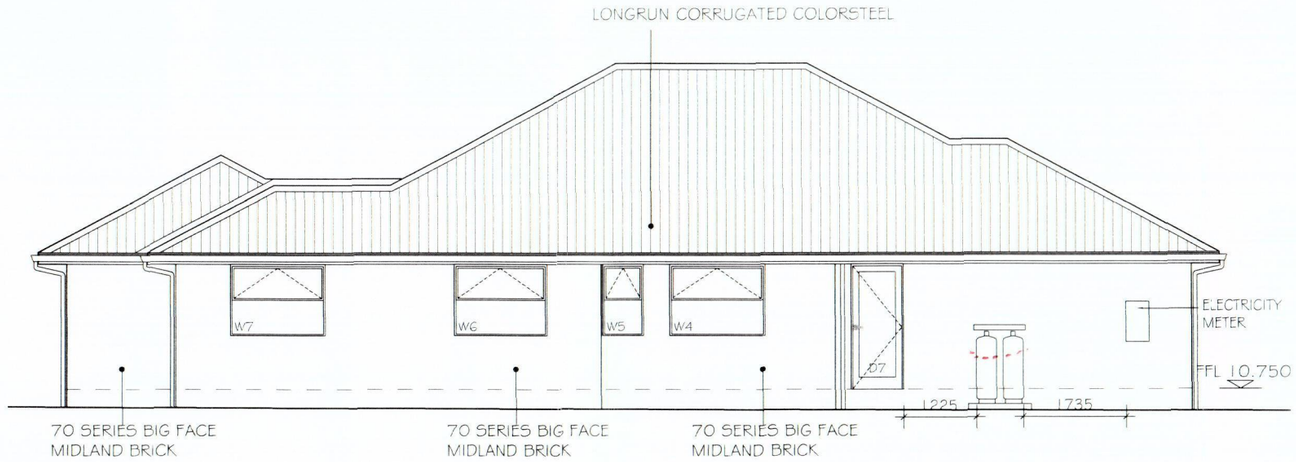

SOUTH ELEVATION

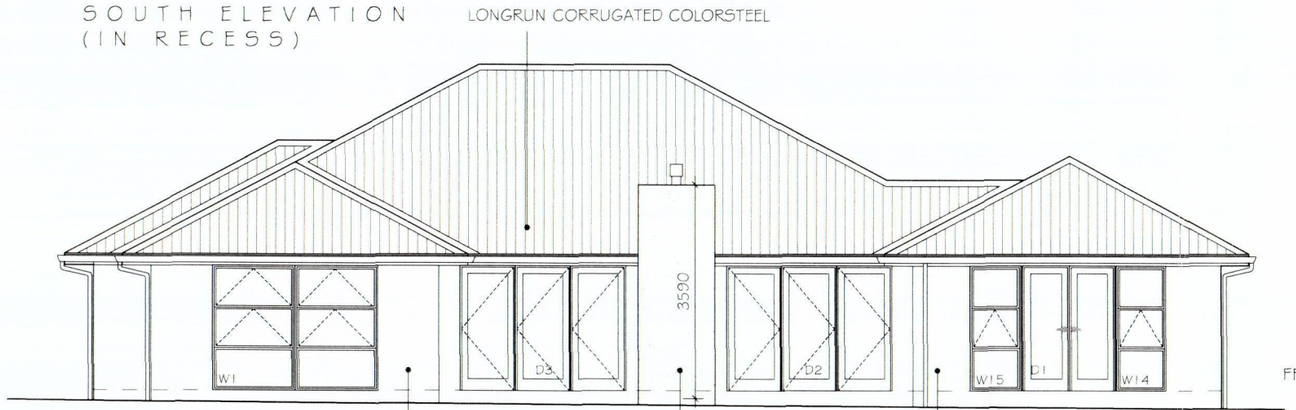

NORTH ELEVATION

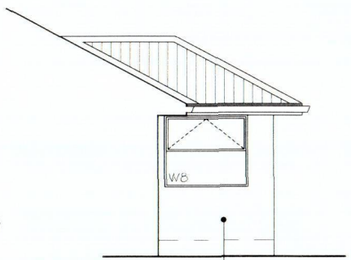

NORTH ELEVATION
(IN RECESS)

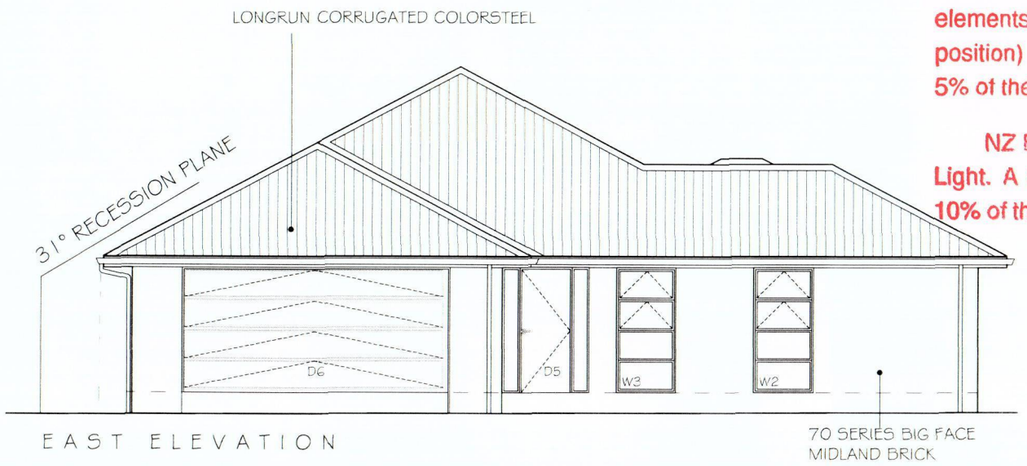

EAST ELEVATION

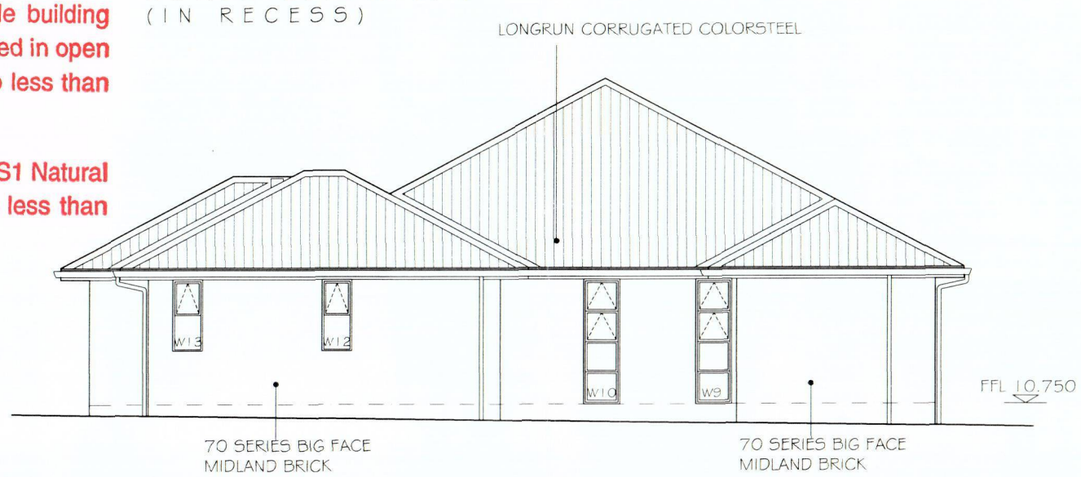

WEST ELEVATION

HURUNUI DISTRICT COUNCIL
Plans and Specifications APPROVED.
In accordance with the Building Act 2004 clause 49(1) and the associated Building Regulations.
Signed .....

GLAZING:-

SWE ELEVATIONS	22.97m²	11.5%
N ELEVATION	26.10m²	
TOTAL	49.07m²	24.7%
EXTERNAL WALL ENVELOPE:-		
WITH WINDOWS	198.62m²	
WITHOUT WINDOWS	149.55m²	

NZ Building Code G4/AS1 Natural Ventilation. Provide openable building elements (provision to be fixed in open position) of a net area of no less than 5% of the floor area.

NZ Building Code G7/AS1 Natural Light. A window area of no less than 10% of the floor area.

mikegreer homes LTD © Mike Greer Homes 478 Moorhouse ave (03) 354 0166 www.mikegreerhomes.co.nz	job title: *Baxter & Thomson House*	drawing title: *Elevations*	legal description: *Lot 6 DP 70175* *7 Swindon Lane* *Amberley*	Notes *SUBJECT TO COUNCIL APPROVAL *ALL MEASUREMENTS TO BE CONFIRMED ON SITE BY CONTRACTOR PRIOR TO THE COMMENCEMENT OF WORK	Scale:*1:100* Version: Date of issue: *May 2008*	Job #: N1019 sheet: *A03* of: *10*

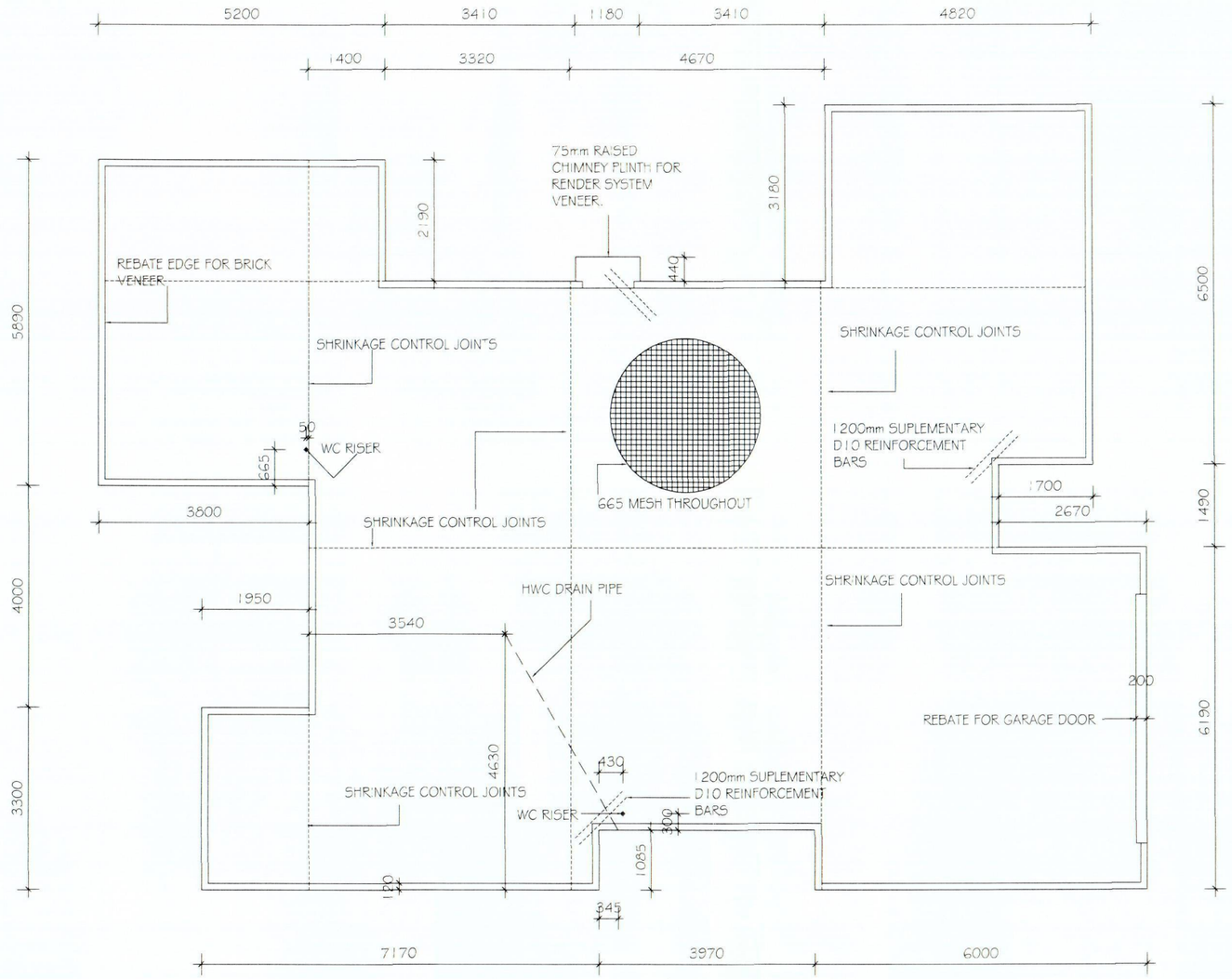

NOTE: DRAIN PIPES PASSING UNDER SLAB AND THROUGH FOUNDATIONS SHALL BE PROTECTED BY SUITABLE FLEXIBLE POLYTHENE SLEAVES GIVING A min. 50mm CLEARANCE FROM THE UNDERSIDE OF THE SLAB.

HURUNUI DISTRICT COUNCIL
Plans and specifications APPROVED.
In accordance with the Building Act 2004, clause 49(1) and the associated Building Regulations.
Signed .....

See Truss design/Layout for locations of Type FS1 slab thickenings for L.B.W.

mikegreerhomes LTD © Mike Greer Homes 478 Moorhouse ave (03) 354 0166 www.mikegreerhomes.co.nz	job title: *Baxter & Thomson House*	drawing title: *Floor Slab*	legal description: *Lot 6 DP 70175* *7 Swindon Lane* *Amberley*	Notes *SUBJECT TO COUNCIL APPROVAL *ALL MEASUREMENTS TO BE CONFIRMED ON SITE BY CONTRACTOR PRIOR TO THE COMMENCEMENT OF WORK	Scale:*1:100* Version: Date of issue: *May 2008*	Job #: N1019 sheet: *A04* of: *10*

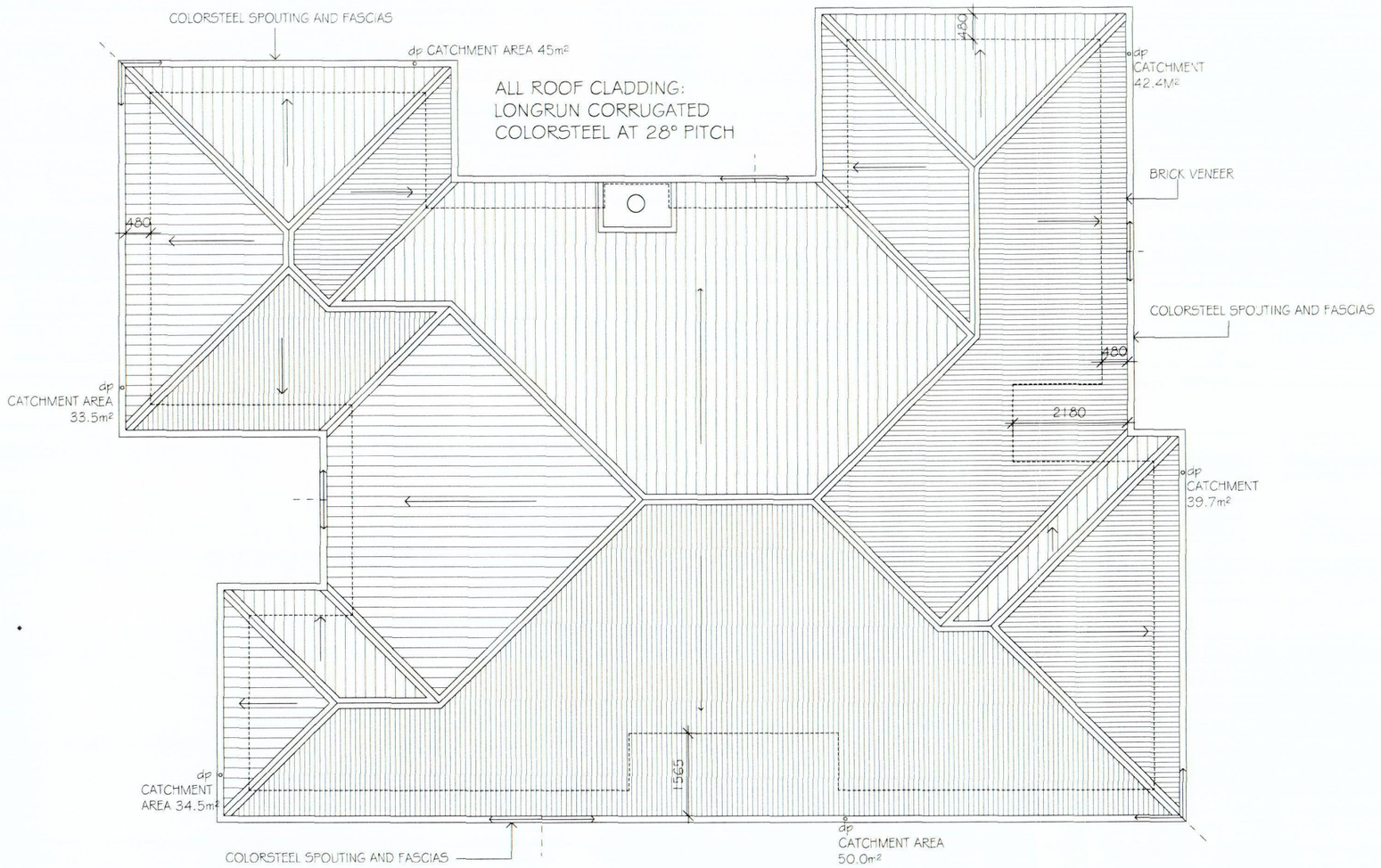

HURUNUI DISTRICT COUNCIL
Plans and Specifications APPROVED.
In accordance with the Building Act
2004, clause 49(1) and the associated
Building Regulations.
Signed .....

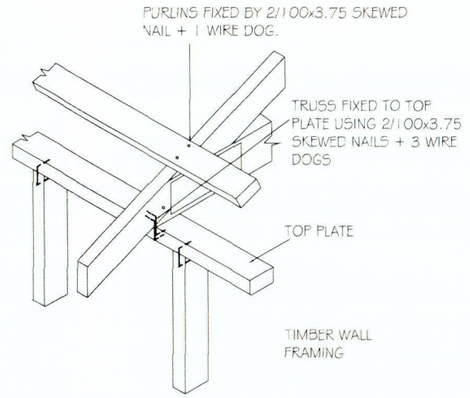

TRUSS AND PURLIN CONNECTIONS 1:20

mikegreerhomes LTD
© Mike Greer Homes
478 Moorhouse ave
(03) 354 0166
www.mikegreerhomes.co.nz

job title: *Baxter & Thomson House*

drawing title: *Roof Plan*

legal description:
Lot 6 DP 70175
7 Swindon Lane
Amberley

Notes
*SUBJECT TO COUNCIL APPROVAL
*ALL MEASUREMENTS TO BE CONFIRMED ON SITE BY CONTRACTOR PRIOR TO THE COMMENCEMENT OF WORK

Scale: *1:100*

Job #: N1019

Version:

sheet: *A05*

Date of issue: *May 2008*

of: *10*



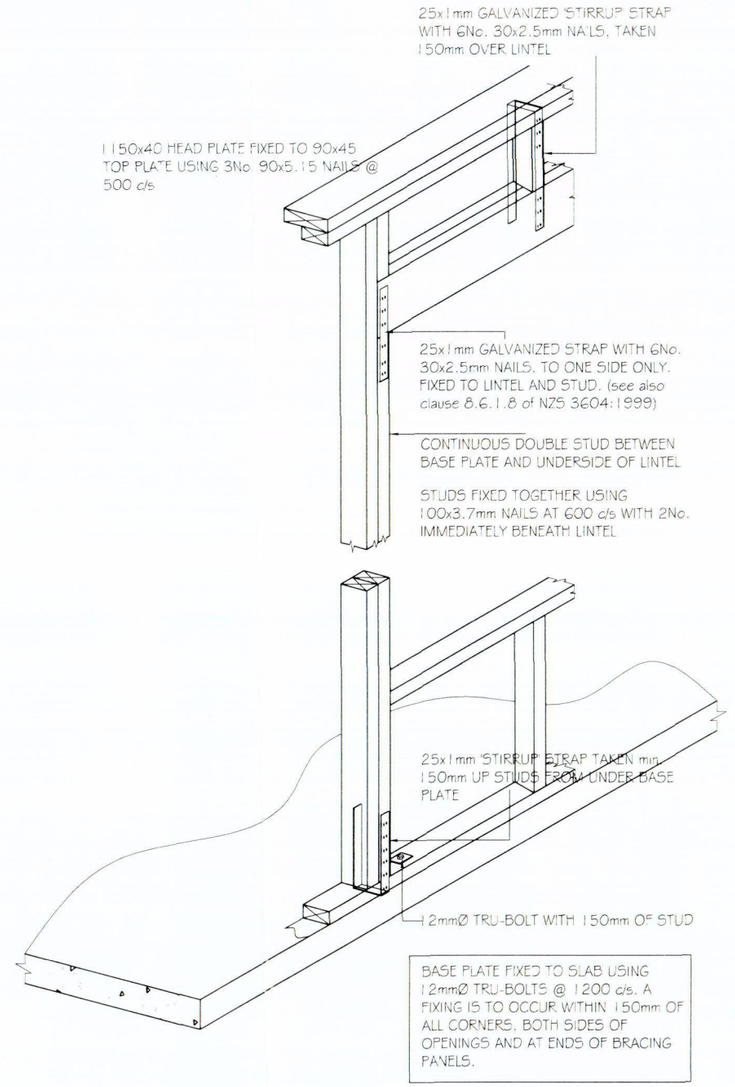

TYPICAL BASE AND TOP PLATE FIXINGS. 1:20

MURUPARA DISTRICT COUNCIL
Plans and specifications APPROVED. In accordance with the Building Act 2004. clause 49(1) and the associated Building Regulations.
Signed .....

mikegreerhomes LTD
© Mike Greer Homes
478 Moorhouse ave
(03) 354 0166
www.mikegreerhomes.co.nz

job title:
Baxter & Thomson House

drawing title:
Bracing Plan with Lintels
Typical Base and top plate fixing detail

legal description:
Lot 6 DP 70175
7 Swindon Lane
Amberley

Notes
*SUBJECT TO COUNCIL APPROVAL
*ALL MEASUREMENTS TO BE CONFIRMED ON SITE BY CONTRACTOR PRIOR TO THE COMMENCEMENT OF WORK

Scale:*1:100;1:20*
Job #: N1019
Version:
sheet: A06
Date of issue:
May 2008
of: 10

1. DOUBLE GLAZED POWDERCOATED ALUMINIUM JOINERY WITH SOLID H3.1 TREATED RADIATA TIMBER REVEALS.
2. 4.5mm PAINTED HARDIFLEX SOFFIT BOARD ON 40mm H1.2 SUPPORT FRAMING.
3. CORRUGATED COLORSTEEL ROOF CLADDING ON 40x 70mm H3.1 PURLINS @ 900 CENTRES CENTRALLY AND 700mm AROUND THE PERIPHERY OVER SELF SUPPORTING ROOF UNDERLAY ON PROPRIETARY DESIGNED AND FABRICATED ROOF TRUSSES @ 900mm CENTRES
4. 10mm GIB LININGS TO CEILINGS ON 70x35 BATTENS @ 400mm CENTRES WITH R3.6 PINK BATTS ABOVE.
5. SELECTED 70 SERIES BRICKWORK OVER 50mm DRAINED CAVITY
6. R2.6 PINK BATTS BETWEEN 90x45 WALL STUDS @ 600 CENTRES.
7. BUILDING WRAP OVER 90mm TIMBER FRAMING TO NZS 3604 1999 AMENDMENT 2.
8. 10mm GIB AQUALINE WALL LININGS TO WET AREAS.
9. 10mm GIB WALL LININGS STOPPED TO LEVEL 4 TO RECEIVE PAINT FINISH.
10. 240x300mm DEEP OR TO SOLID BEARING 20mPa CONCRETE FOOTINGS, REINFORCED WITH 2/D16 BARS AND R10 STARTER/LINKS AT 600 CENTRES.
11. 100mm CONCRETE FLOOR SLAB REINFORCED WITH 665 MESH. OVER DAMP PROOF MEMBRANE OVER 150mm SAND BLINDED AND WELL COMPACTED 40mm HARDFILL.

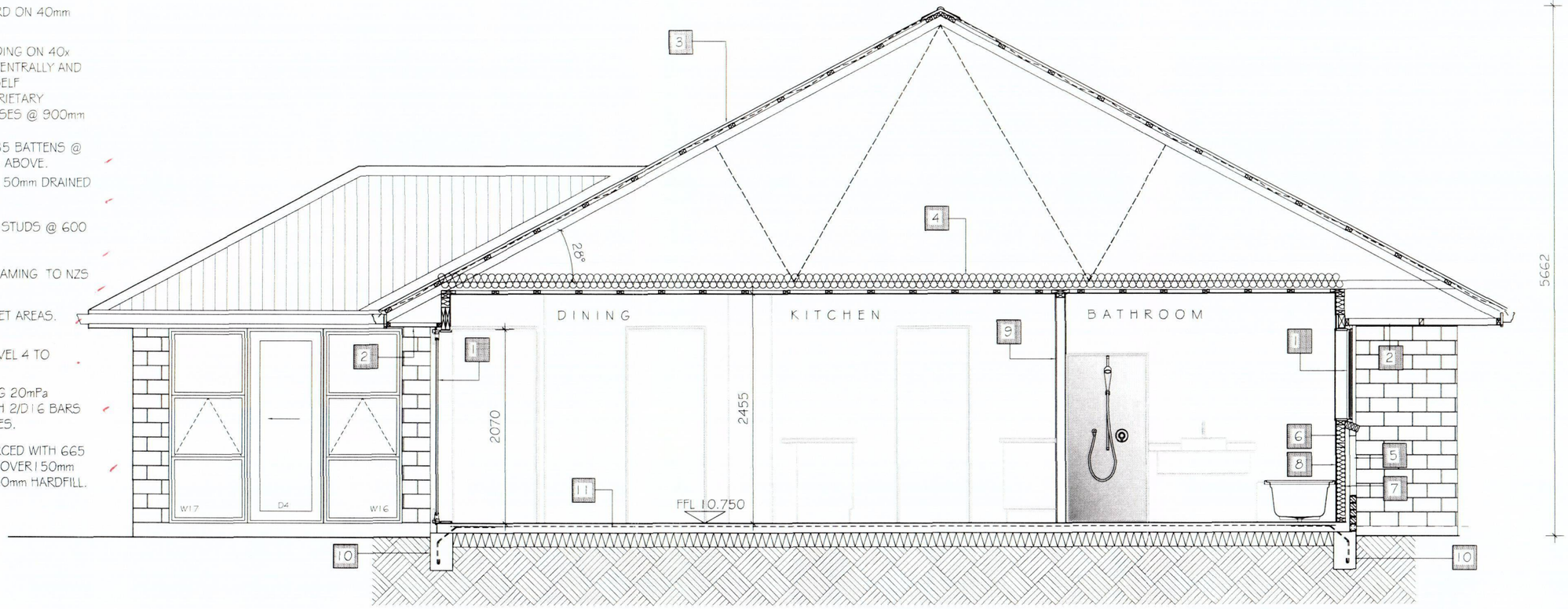

SECTION A-A 1:50

TIMBER TREATMENT TO NZS 3602:2003			
TIMBER ITEMS	IN SERVICE MOISTURE CONTENT	TREATMENT	TIMBER
PURLINS	20% OR LESS	H1.1	RADIATA PINE
ROOF FRAMING INC. CEILING BATTENS	20% OR LESS	H1.1	RADIATA PINE
VALLEY BOARDS	20% OR LESS	H3.1	RADIATA PINE
ROOF FLASHING SUPPORT BOARDS	20% OR LESS	H3.1	RADIATA PINE
EXTERIOR WALL FRAMING	20% OR LESS	H1.2	RADIATA PINE
INTERIOR WALL FRAMING	20% OR LESS	H1.1	RADIATA PINE
SOFFIT SUPPORT FRAMING	20% OR LESS	H3.1	RADIATA PINE
WINDOW REVEALS	20% OR LESS	H3.1	RADIATA PINE

HURUNUI DISTRICT COUNCIL
Plans and specifications APPROVED in accordance with the Building Act 2004, clause 49(1) and the associated Building Regulations.
Signed .....

mikegreerhomes LTD
© Mike Greer Homes
478 Moorhouse ave
(03) 354 0166
www.mikegreerhomes.co.nz

job title: *Baxter & Thomson House*

drawing title: *Section A-A*

legal description: *Lot 6 DP 70175, 7 Swindon Lane, Amberley*

Notes
*SUBJECT TO COUNCIL APPROVAL
*ALL MEASUREMENTS TO BE CONFIRMED ON SITE BY CONTRACTOR PRIOR TO THE COMMENCEMENT OF WORK

Scale: *1:50*
Version:
Date of issue: *May 2008*

Job #: N1019
sheet: *A07*
of: *10*

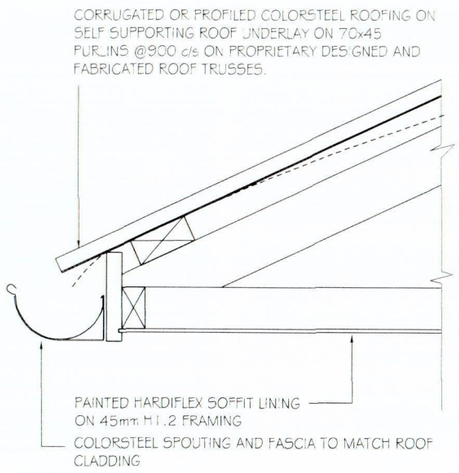

COLORSTEEL FASCIA DETAIL 1:10

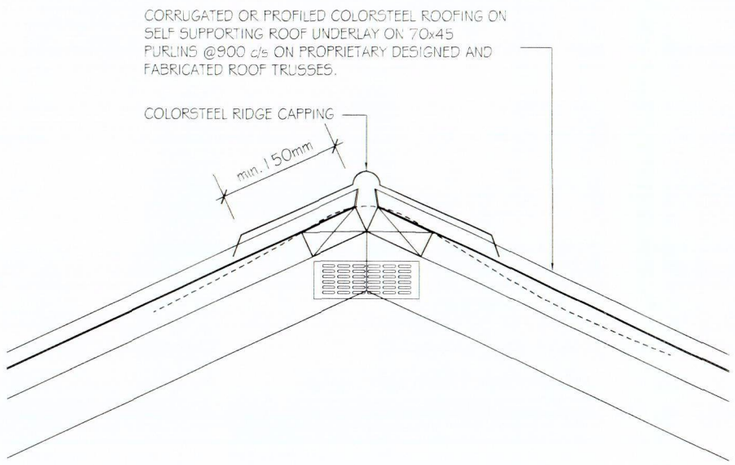

COLORSTEEL RIDGE DETAIL 1:10

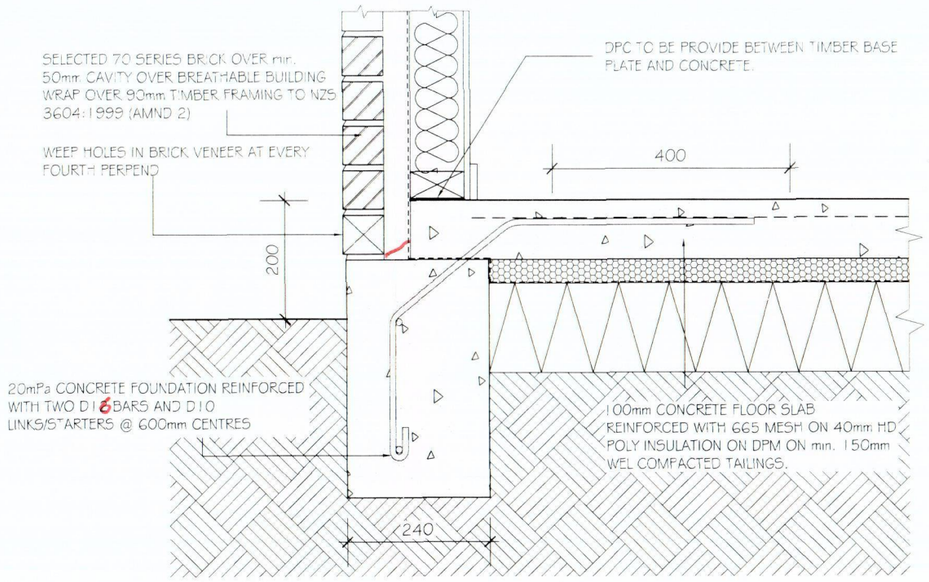

FOUNDATION DETAIL 1:10

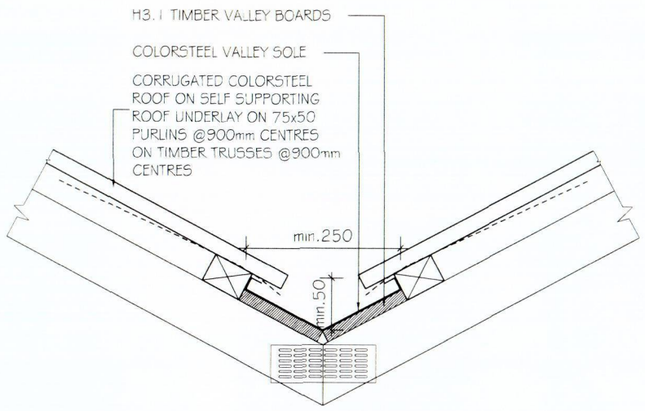

COLORSTEEL ROOF VALLEY DETAIL 1:10

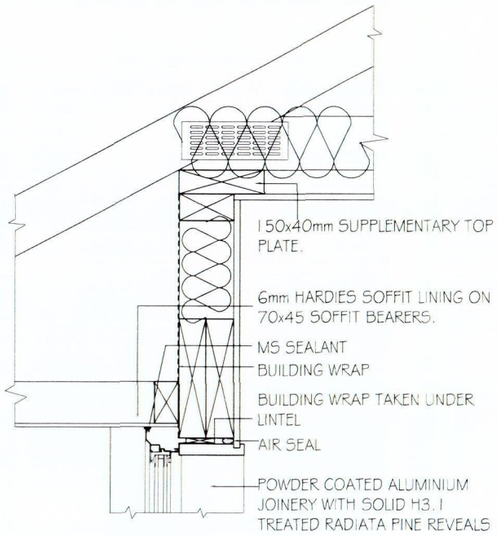

SOFFIT/WINDOW HEAD DETAIL 1:10

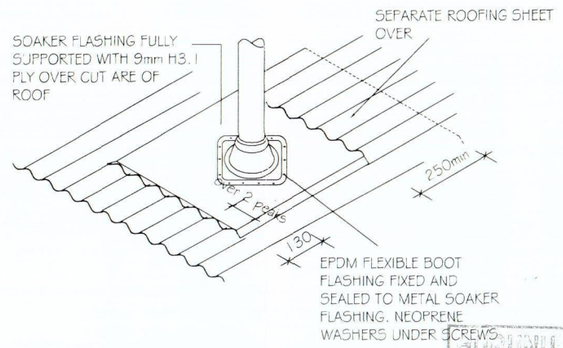

LARGE PIPE PENETRATIONS 1:20

AGRANUI DISTRICT COUNCIL
Plans and specifications APPROVED.
In accordance with the Building Act 2004, clause 49(1) and the associated Building Regulations.
Signed .....

mikegreerhomes LTD © Mike Greer Homes 478 Moorhouse ave (03) 354 0166 www.mikegreerhomes.co.nz	job title: *Baxter & Thomson House*	drawing title: *Detail Sheet 1*	legal description: *Lot 6 DP 70175* *7 Swindon Lane* *Amberley*	Notes *SUBJECT TO COUNCIL APPROVAL *ALL MEASUREMENTS TO BE CONFIRMED ON SITE BY CONTRACTOR PRIOR TO THE COMMENCEMENT OF WORK	Scale:*1:10* Version: Date of issue: *May 2008*	Job #: N1019 sheet: *A08* of: *10*

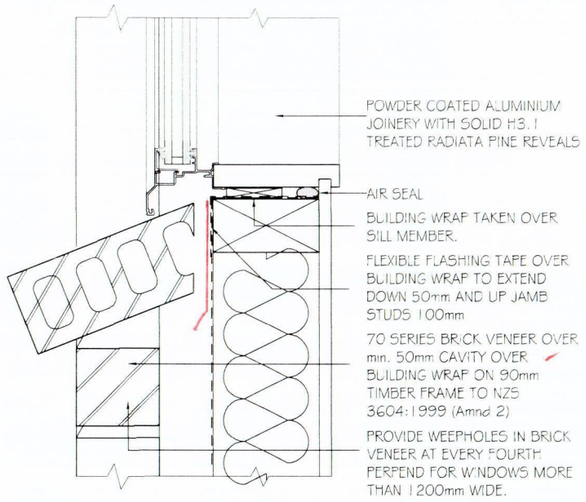

BRICK WINDOW SILL DETAIL 1:5

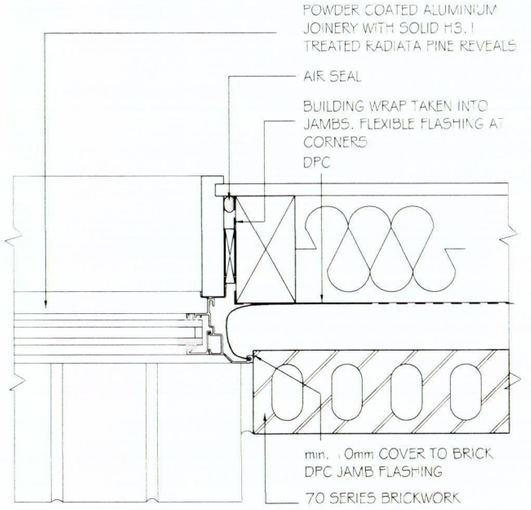

BRICK WINDOW JAMB 1:5

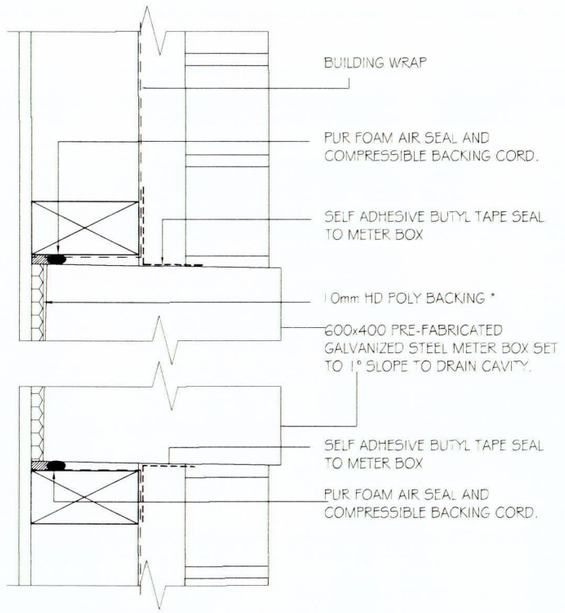

BRICK VENEER METER BOX PENETRATION DETAIL 1:5

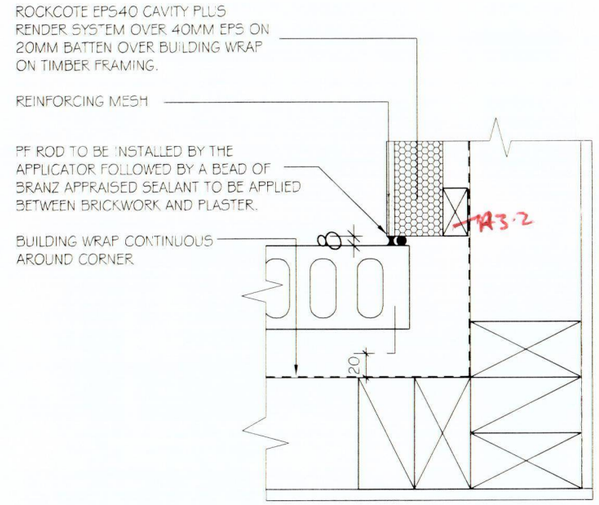

RENDER/BRICKWORK INTERNAL CORNER 1:5

KAIKOURA DISTRICT COUNCIL
Plans and specifications APPROVED.
In accordance with the Building Act 2004, clause 49(1) and the associated Building Regulations.
Signed .....

mikegreerhomes LTD © Mike Greer Homes 478 Moorhouse ave (03) 354 0166 www.mikegreerhomes.co.nz	job title: *Baxter & Thomson House*	drawing title: *Detail Sheet 2*	legal description: *Lot 6 DP 70175* *7 Swindon Lane* *Amberley*	Notes *SUBJECT TO COUNCIL APPROVAL *ALL MEASUREMENTS TO BE CONFIRMED ON SITE BY CONTRACTOR PRIOR TO THE COMMENCEMENT OF WORK	Scale:*1:5* Version: Date of issue: *May 2008*	Job #: N1019 sheet: *A09* of: *10*

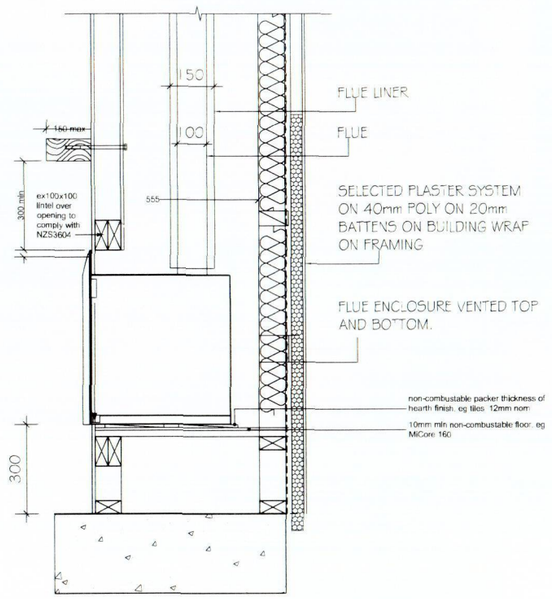

GAS FIRE DETAIL SECTION
(RAISED POSITION).

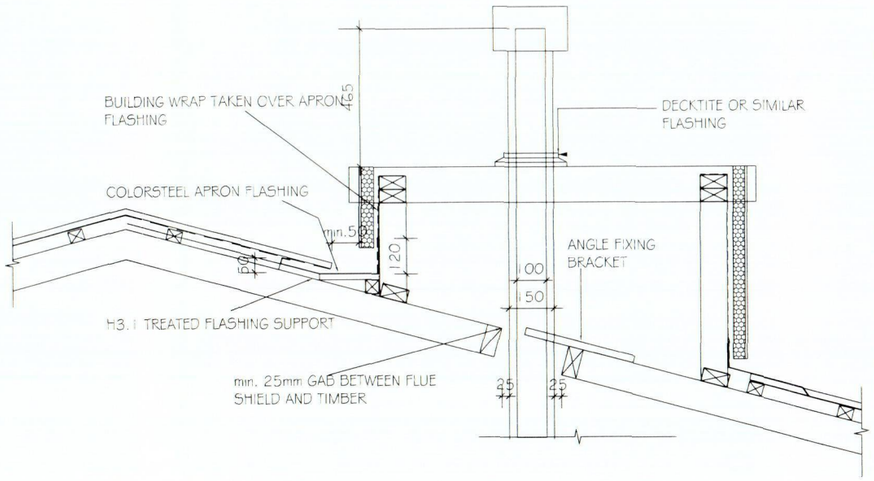

LONG SECTION THROUGH FLUE ENCLOSURE
Scale: 1:20

GENERAL CONSTRUCTION AND
CLADDING SHOWN INDICATIVE ONLY

FROM NZS 5261:2003, please ensure complaince to all other *relevant sections of this code.*

2.6.13 FLUE TERMINALS

2.6.13.1 Location

The termination point of a flue shall be located in relation to any associated building and to neighbouring structures so that wind from any direction is not likely to create a downdraught in the flue or chimney.

Except where 2.6.13.3 applies, a flue terminal shall:

(a) Be at least 1m horizontally from a neighbouring structure; or

(b) If less than 1m horizontally from a neighbouring structure, be at least 500mm above that structure;

(c) Be at least 1.5m from any opening into a building; and

(d) Be at least 200mm from another flue terminal.

2.6.13.2 Terminating a flue above a roof

Where a flue is to terminate above:

(a) A roof, the end of the flue shall be at least 500mm from the nearest part of the roof;

(b) A trafficable roof designed for personal or public use, the end of the flue shall be at least 2m above the roof level and at least 500mm above any surrounding parapet; or

(c) A chimney, the end of the flue shall be at least 200mm from the nearest part of the chimney.

NOTE-
(1) The distance is measured before the cowl is fitted to the end of the flue
(2) (NA)
(3) (NA)

2.6.13.3 Location of a flue terminal other than above a roof

(NA)

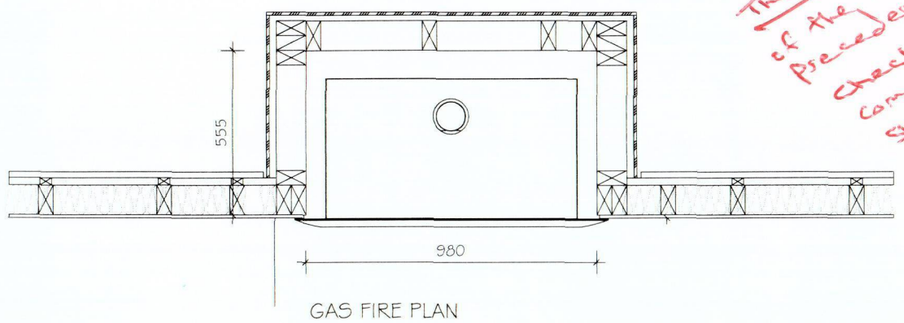

GAS FIRE PLAN
(RAISED POSITION).

The installation instructions of the manufacturer will take precedence over these details check & their documents before commencing work. These documents shall be on site for Council inspection.

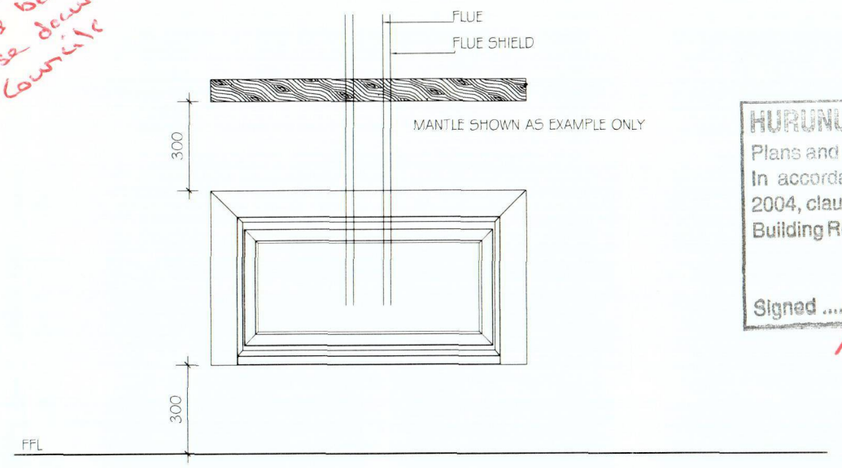

TYPICAL GAS FIRE ELEVATION
(RAISED POSITION).

HURUNUI DISTRICT COUNCIL
Plans and specifications APPROVED.
In accordance with the Building Act 2004, clause 49(1) and the associated Building Regulations.
Signed .....

mikegreerhomes LTD © Mike Greer Homes 478 Moorhouse ave (03) 354 0166 www.mikegreerhomes.co.nz	job title: *Baxter & Thomson House*	drawing title: *GAS FIREPLACE INSTALLATION DETAIL*	legal description: *Lot 6 DP 70175* *7 Swindon Lane* *Amberley*	Notes *SUBJECT TO COUNCIL APPROVAL *ALL MEASUREMENTS TO BE CONFIRMED ON SITE BY CONTRACTOR PRIOR TO THE COMMENCEMENT OF WORK	Scale:*1:20* Version: Date of issue: *May 2008*	Job #: N1019 sheet: *A10* of: *10*

HURUNUI DISTRICT COUNCIL
Plans and specifications APPROVED.
In accordance with the Building Act 2004, clause 49(1) and the associated Building Regulations.
Signed .....

1. DOUBLE GLAZED POWDERCOATED ALUMINIUM JOINERY WITH SOLID H3.1 TREATED RADIATA TIMBER REVEALS.
2. 4.5mm PAINTED HARDIFLEX SOFFIT BOARD ON 40mm H1.2 SUPPORT FRAMING.
3. CORRUGATED COLORSTEEL ROOF CLADDING ON 40x 70mm H3.1 PURLINS @ 900 CENTRES CENTRALLY AND 700mm AROUND THE PERIPHERY OVER SELF SUPPORTING ROOF UNDERLAY ON PROPRIETARY DESIGNED AND FABRICATED ROOF TRUSSES @ 900mm CENTRES
4. 4.5mm PAINTED HARDIFLEX SOFFIT BOARD ON 90x45 H1.2 TREATED CEILING FRAME
5. 10mm GIB LININGS TO CEILINGS ON 70x35 BATTENS @ 400mm CENTRES WITH R3.6 PINK BATTS ABOVE.
6. R2.6 PINK BATTS BETWEEN 90x45 WALL STUDS @ 600 CENTRES.
7. BUILDING WRAP OVER 90mm TIMBER FRAMING TO NZS 3604 1999 AMENDMENT 2.
8. 10mm GIB WALL LININGS STOPPED TO LEVEL 4 TO RECEIVE PAINT FINISH.
9. 240x300mm DEEP OR TO SOLID BEARING 20mPa CONCRETE FOOTINGS, REINFORCED WITH 2/D16 BARS AND R10 STARTER/LINKS AT 600 CENTRES.
10. 100mm CONCRETE FLOOR SLAB REINFORCED WITH 665 MESH, OVER DAMP PROOF MEMBRANE OVER 150mm SAND BLINDED AND WELL COMPACTED 40mm HARDFILL.
11. COLORSTEEL SPOUTING AND FASCIA.

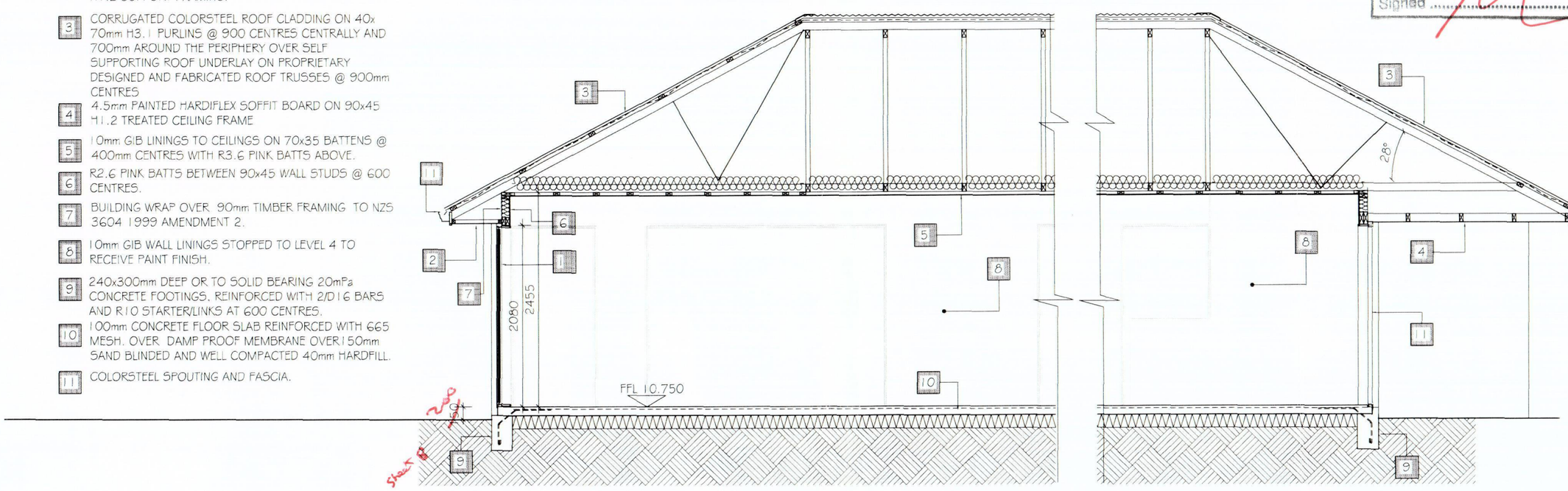

SECTION B-B 1:50

mikegreenhomes LTD © Mike Greer Homes 478 Moorhouse ave (03) 354 0166 www.mikegreerhomes.co.nz	job title: *Baxter & Thomson House*	drawing title: *Section B-B*	legal description: *Lot 6 DP 70175* *7 Swindon Lane* *Amberley*	Notes *SUBJECT TO COUNCIL APPROVAL *ALL MEASUREMENTS TO BE CONFIRMED ON SITE BY CONTRACTOR PRIOR TO THE COMMENCEMENT OF WORK	Scale:*1:50* Version: Date of issue: *May 2008*	Job #: N1019 sheet: *A11* of: *10*

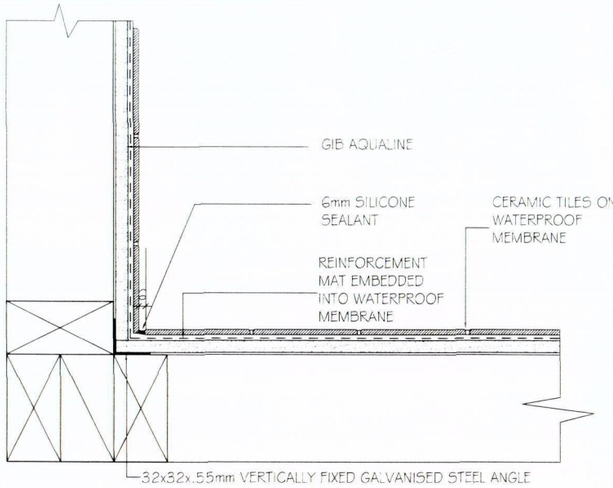

TILED BATHROOM VERTICAL WALL CORNER DETAIL 1:5

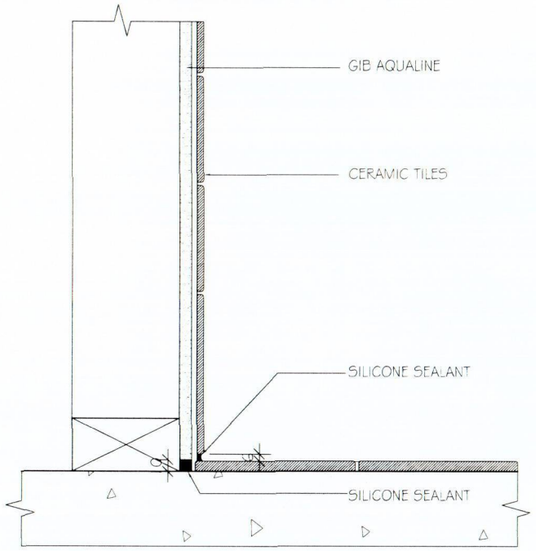

TILED WALL TO FLOOR JUNCTION 1:5

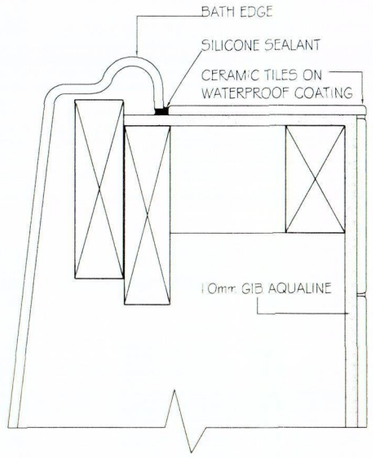

BATH PLINTH TOP 1:5

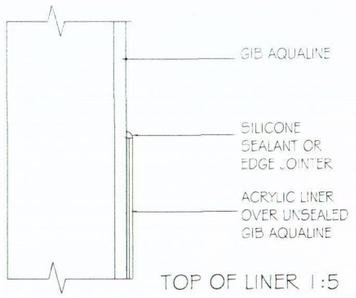

TOP OF LINER 1:5

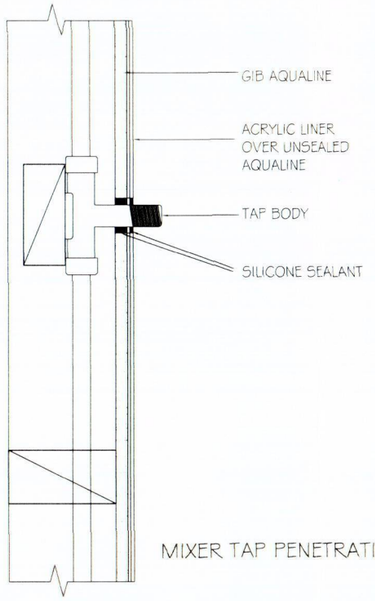

MIXER TAP PENETRATION 1:5

HURUNUI DISTRICT COUNCIL
Plans and specifications APPROVED
In accordance with the Building Act 2004, clause 49(1) and the associated Building Regulations.
Signed .....

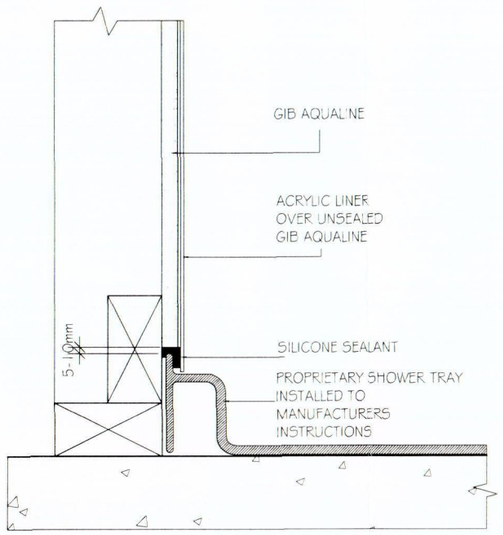

BASE OF ACRYLIC SHOWER LINER 1:5

mikegreerhomes LTD
© Mike Greer Homes
478 Moorhouse ave
(03) 354 0166
www.mikegreerhomes.co.nz

job title:
Baxter & Thomson House

drawing title:
Detail Sheet 3 (Wet area details)

legal description:
Lot 6 DP 70175
7 Swindon Lane
Amberley

Notes
*SUBJECT TO COUNCIL APPROVAL
*ALL MEASUREMENTS TO BE CONFIRMED ON SITE BY CONTRACTOR PRIOR TO THE COMMENCEMENT OF WORK

Scale: *1:5*
Version:
Date of issue: *May 2008*

Job #: N1019
sheet: *A12*
of: *10*

IB600 Gas fire

escea.

Information sheet for builders and architects.

Creating the Cavity:
The dimensioned drawing below shows the minimum size of opening that must be created to keep combustible materials the required distance from the heater.
The wall board that lines the outside of this opening can be normal dry wall (Gib Board) and does not need to be non-combustible providing that it does not come any closer to the fire than the dimensions below show.

Product Dimensions: (mm)

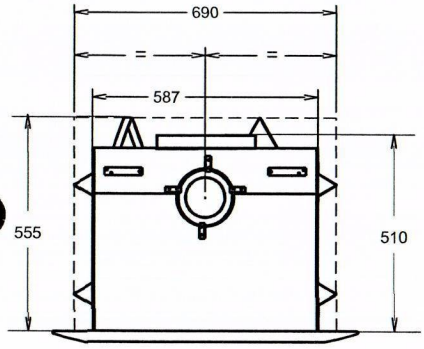

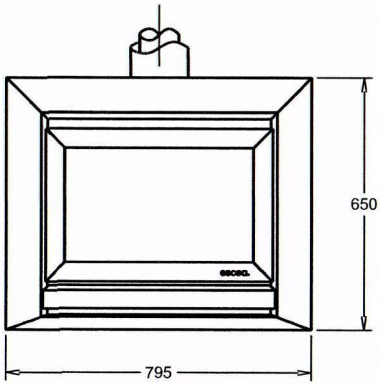

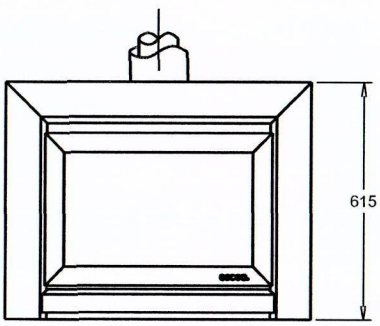

Minimum Cavity Dimensions: (mm)

	A	B	C	
IB600	700	585	555	for timber framed walls
IB600	600	570	520	for masonry cavities

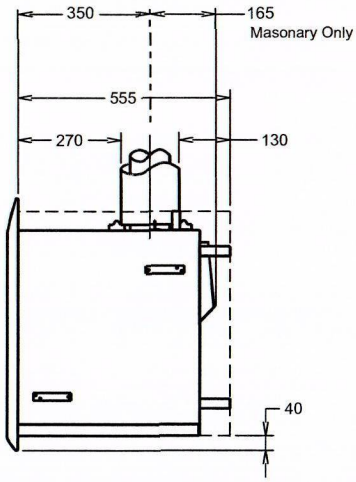

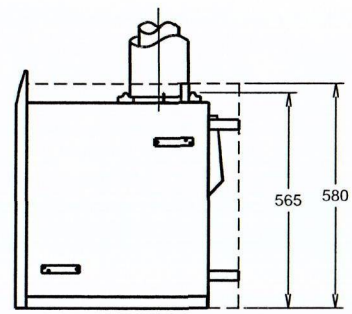

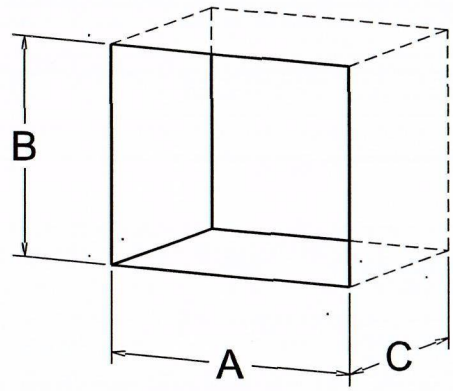

IB600 – 4 sided fascia

Hurunui District Council
Building Consent Number

BC / 080237

Please quote this number with all inquiries and inspection bookings.

IB600 – 3 sided fascia

Gas Specifications:

Heat output	= 7.5kW
Gas Input	= 36Mj/h
Gas Connection	= Front RH corner of heater
Electrical Connection	= 240V 3 Pin plug within 1.2m of the rear LH corner of heater

Flueing the heater:
This heater is to be conventionally flued with a 100mm dia flue system, in accordance with the requirements of NZS 5261 / AS5601 / AG601-2000. A power flue system is also available, please ask your agent, or visit our web site for details on this.

Ventilating the Cavity for Power Flue
When a cavity is being created for the fire in a timber framed wall, ensure that it is not a fully sealed space. Ventilation **MUST** be provided at the base of the cavity and, if possible, leave the top of the cavity open into the ceiling space otherwise another vent at the top of the cavity will be required.
For the power flue installation, a single Ø120mm hole, covered with a suitable louver plate, centrally located at the base of the cavity is required.

It is also highly recommended to add some ventilation to the base of masonry cavities in the form of a group of 3 Ø20mm holes to let in fresh air. If this is on an external breastwork then cover with a suitable louver plate. Cavity ventilation for power flue installations is mandatory for both timber frame and masonry installations.

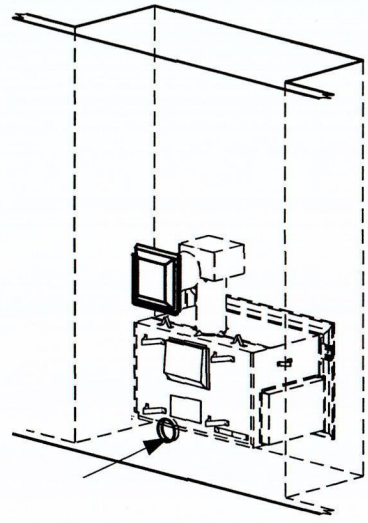

Floor of cavity:
This appliance MUST be installed on a non-combustible floor. This can be in the form of concrete (minimum thickness 20mm) or non-combustible fiber board (minimum thickness 10mm). Options include Micore 160, Promina, Ederpan LD and Supalux.

Hearth:
If this fire is being installed at floor level a hearth made from non-combustible material must extend *no less that 300mm from the front of the fire*. This hearth should be at least as wide at the fire's outer fascia and no less than 10mm thick. The floor in front of this hearth will still get warm so if floor covering is vinyl, nylon carpet or other heat sensitive material then we recommend extending the hearth to 450mm in depth.
If you plan to cover the hearth with a veneer such as tiles remember to keep the base of the fire level with the top of the hearth covering.

Raising the fire up a wall:
If the fire is being located where its base is any more than **100mm** up off the ground, no hearth is required. Escea recommend using our four sided fascia. (Available from your Escea dealer).
The floor of the cavity still needs to be covered in a non combustible material as described above.

Mantle Clearance:
Please refer to diagram below.
Mantles or protruding ledges mounted above the heater that are made from combustible materials, must not extend out side of the dimensions shown.

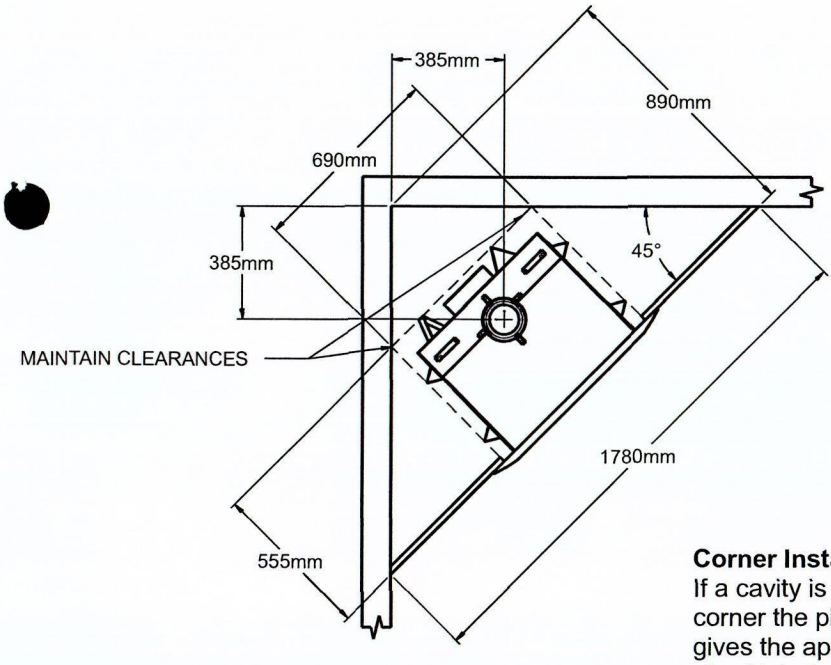

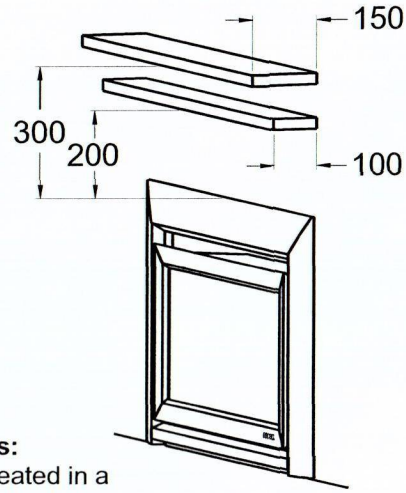

Corner Installations:
If a cavity is to be created in a corner the picture to the left gives the approximate minimum sized interior wall and resultant flue position.

Manufactured by: Escea Ltd, 31 Devon St, Dunedin
email: info@escea.co.nz
Ph: 03 479 0302 Fax: 03 479 0301
web: www.escea.co.nz

Gable Range
Producer Statement and Structural Details
(IL1 Non-Habitable, Unlined)

INDEX:

1	Contents
2	Producer Statement
3	Specifications
4	Durability Statement
5	Site Plan
6-11	Engineering Tables
12	Foundation Details SD-F01
13	Foundation Details SD-F02
14	Frame Details SD-P01
15	Major Openings SD-M01
16	Minor Door Openings SD-M05
17	Bracing Details
18	Flashing Details
19	Flashing Detail SD-E01

CLIENT:

Don Campbell
7 Swindon Lane
Amberley
CAN
7410

BUILDING:

System Ref Code:	JH.309 (v3.3.2.15)
Location:	Lat: -43.146309 Lng: 172.730994
Wind Speed: Vdes Θ:	34.22 m/s
Snow Loading:	Sg = 0.9 kPa
Span:	4.000m
Length:	7.000m
Knee Height:	2.400m
Bay Size:	2x3.500m
Roof Pitch:	15°
Roofing Sheet:	7-Rib 0.35mm
Cladding Sheet:	7-Rib 0.35mm
Downpipe Type:	80mm Coloursteel
Floor Type:	Concrete Slab
Area:	Total 28.0m²

NOTES :

1 - Contractor to confirm all dimensions on site at time of construction
2 - These drawings must not be reproduced without express permission from Spanbild New Zealand Limited.

TOTALSPAN
A Division of Spanbild New Zealand Ltd
112 Waterloo Road, Hornby
P.O.Box 11-013, Christchurch Details

SPANBILD
DESIGN. MANUFACTURE. BUILD.

PRODUCER STATEMENT – PS1
DESIGN

BUILDING CODE CLAUSE(S): B1 **JOB NUMBER:** JH.309
ISSUED BY: Spanbild NZ Ltd
(Engineering Design Firm)
TO: Totalspan North Canterbury
(Owner/Developer)
TO BE SUPPLIED TO: Hurunui District Council
(Building Consent Authority)
IN RESPECT OF: 4.000m span x 7.000m length; IL1 portal building; DL=50yrs
(Description of Building Work)
AT: 7 Swindon Lane, Amberley, 7410, CAN
(Address, Town/City)
LEGAL DESCRIPTION: **N/A**

We have been engaged by the owner/developer referred to above to provide *(Extent of Engagement)*:
Structural Design as shown on sheets 1, 2, 5-16
in respect of the requirements of the Clause(s) of the Building Code specified above for all, as specified in the Schedule, of the proposed building work.

The design carried out by us has been prepared in accordance with:

- ✔Compliance documents issued by the Ministry of Business, Innovation & Employment *(Verification method/acceptable solution)* B1/VM1, B1/VM4 and/or;
- Alternative solution as per the attached Schedule.

The proposed building work covered by this producer statement is described on the drawings specified in the Schedule, together with the specification, and other documents set out in the Schedule.

On behalf of the Engineering Design Firm, and subject to:

- Site verification of the following design assumptions:
- All proprietary products meeting their performance specification requirements;

I believe on reasonable grounds that:

- the building, if constructed in accordance with the drawings, specifications, and other documents provided or listed in the Schedule, will comply with the relevant provisions of the Building Code and that;
- the persons who have undertaken the design have the necessary competency to do so.

~~I recommend the **N/A** level of **construction monitoring.**~~

I, *(Name of Engineering Design Professional)* Ryan Moreau , am:

- ✔CPEng number 1013731

and hold the following qualifications BE(Hon), CPEng, CMEngNZ

The Engineering Design Firm holds a current policy of Professional Indemnity Insurance no less than $200,000
The Engineering Design Firm is a member of ACE New Zealand.

SIGNED BY *(Name of Engineering Design Professional)*: Ryan Moreau

ON BEHALF OF *(Engineering Design Firm)*: Spanbild NZ Ltd Date:14-04-2025

Note: This statement has been prepared solely for the Building Consent Authority named above and shall not be relied upon by any other person or entity. Any liability in relation to this statement accrues to the Engineering Design Firm only. As a condition of reliance on this statement, the Building Consent Authority accepts that the total maximum amount of liability of any kind arising from this statement and all other statements provided to the Building Consent Authority in relation to this building work, whether in tort or otherwise, is limited to the sum of $200,000.

This form is to accompany **Form 2 of the Building (Forms) Regulations 2004** for the application of a Building Consent.

SCHEDULE TO PS1

The proposed building work covered by this producer statement is described on the drawings with project reference and sheet numbers on the PS1

The specifications, durability statement and maintenance requirements are set out in the drawings.

Alternative Solutions apply for areas that the potential for liquefaction or lateral spread has been identified as it is outside B1/VM4. The alternative solutions are MBIE guidance documents "Planning and engineering guidance for potentially liquefaction prone land" and "Repairing and re-building houses affected by the Canterbury Earthquakes"

The foundations require suitable soils. This IL1 foundation (generally unlined) has been designed for;

- Geotechnical Ultimate Bearing Capacity of 225 kPa,
- Where there is no potential for liquefaction or lateral spread or
- Liquefaction Vulnerability where liquefaction damage is unlikely (very low or low liquefaction vulnerability),
- Non-expansive soils.

- Indications of local instability,
- Foundations closer than 3 x height of a bank plus 0.6 m measured from the foot of the bank, and the length of the flat at the base of the bank is a minimum of 4 times the height of the bank,
- Slope steeper than 5 degrees away from the building platform.
- Buried organic topsoil, peat, soft clays, buried services or expansive clays, any fill that does not have a certificate of suitability issued in accordance with NZS 4431

TOTALSPAN®
STEEL BUILDINGS

Project Ref: JH.309

© Copyright 2017 Spanbild NZ Ltd. All rights reserved.

Don Campbell
7 Swindon Lane
Amberley
7410
021 1521186

Gable Range - Design

Producer Statement

SPECIFICATIONS

GENERAL NOTES

1. IMPORTANT DESIGN LIMITATIONS

1.1. Design limitations apply to any item or alteration not specifically stated or clearly represented within the scope of these engineering specifications. This is a CAD drawing which must not be altered by manual methods, exceptions to this are:

1.1.1. The documentation clearly states where "generic" items can be crossed out, or the applicable detail circled to provide clarity.

1.1.2. Additional specific design has been carried out by a CPENG engineer with a PS1 supplied covering "part" design works for any ammedment/alterations. Alternative/Additional drawings shall be supplied or these specifications must be clearly marked up in red pen and accompanied by the PS1 engineer's signature on each drawing altered which is covered by the additional specific design, as above.

1.1.3. A letter has been supplied in writing, signed by the original engineer(s) covering "minor" ammedments/alterations or clarifications to varying interpretations of the design drawings.

1.2. Habitable/Lined Buildings are not covered within this scope of work.

2. GENERAL

2.1. All work shall conform to the New Zealand Building Code

2.2. B2 Durability shall be covered by respective product/manufacturers durability statements

3. LOADINGS

3.1. Buildings are designed to AS/NZS 1170

3.1.1. Refer Schedule for Windspeed, Vdesθ in m/s.

3.1.2. Refer Schedule for Ground Snow Load if applicable in kPa.

3.1.3. The roofing is not designed for point loads of 1.1kN, these are Surfaces (including transparent surface) over which supports (e.g., boards or ladders) are required to be laid to support actions incidental to maintenance (e.g., people).

3.1.4. Earthquake loads, except for "near fault" locations due to the light-weight structure are not critical for unlined, Importance Level 1 & 2 standard structures with cladding as specified below only.

3.1.5. Habitable/Lined or Importance Level 3 and greater structures require specific design engineering in addition to this specification covering the scope of works. (Importance Level 2 structures have been designed to resist "structural damage" deflections only).

3.1.6. Any loads exceeding the above shall require specific design engineering in addition to this specification covering the scope of works.

4. FOUNDATIONS

4.1. Ground shall have a safe bearing capacity of at least 75kPa (225kPa Ultimate).

4.1.1. This is achieved by meeting "good ground", safe bearing capacity of at least 100kPa in accordance with NZS 3604 (i.e. exceeds the above) OR;

4.1.2. Safe bearing capacity of at least 75kPa by Site Specific Geo-Technical Report (as NZS 3604 has no means of determining a minimum safe bearing of 75kPa).

5. CONCRETE

5.1. Designed to NZS 3101

5.2. Remove vegetation and loose material from the building footprint, backfill with compacted hard-fill if required and lay sand blinding to the underside of the concrete slab. Ensure the surface of the slab will be at least 100mm above the highest level of cleared ground around the slab.

5.3. Concrete shall have a maximum aggregate size of 20mm and minimum 20MPa compression strength at 28 days.

5.4. Refer Foundation Details for further details.

5.5. Lesser Ductile Mesh is allowed to be used for Importance Level 1 structures only

5.5.1. Refer NZS 3101 Clause 5.3.2.7 (a)

6. STEELWORK & COMPONENTS

6.1. Boxed Sections

6.1.1. Shall be fixed through flange centres within 100mm from the end and at @ 600mm centres max. (+50mm tolerance) using #10 Self-Drilling Screws. Excludes exterior flanges of Girts & Purlins (as cladding teks provide fastening).

6.2. All Steelwork & Components shall (where applicable) conform to:

6.2.1. AS/NZS 4600 - Cold-formed steel structures

6.2.2. AS/NZS 1252 - High strength steel bolts with associated nuts and ...

6.2.3. AS/NZS 1365 - Tolerances for flat-rolled steel products

6.2.4. AS/NZS 4505:2013 - Garage doors and other large access doors

6.2.5. AS 1110 - ISO metric hexagon bolts and screws

6.2.6. AS 1112 - ISO metric hexagon nuts...

6.2.7. AS 1397 - Continuous hot-dip metallic coated steel sheet and strip

6.2.8. AS 1580 - Paints and related materials - Methods of test

6.2.9. AS 3566 - Self-drilling screws for the building and construction industries

6.2.10. AS 4291.1 - Mechanical properties of fasteners made of carbon steel and ...

6.2.11. IFI-114(Imperial) / IFI-505(Metric) - Break Mandrel Blind Rivets

7. CLADDING

7.1. Roof and Wall Sheeting shall be 0.35 - 0.55 B.M.T, AZ150 Coating, G550 Steel only. Alternative claddings (excluding glass reinforced panel), require an independent specific design certificate for the scope of work.

7.2. Fixing pattern as per E2/AS1 or NZ MRM - NZ Metal Roof and Wall Cladding Code of Practice.

7.3. Flashings shall be fixed as per manufacturers recommendations/instructions.

8. SERVICES

8.1. Penetrations through framing members

8.1.1. Typical hole diameter(s) shall not exceed 29mm (1 ⅛ inch)

8.1.1.1. A single 44mm (1 ¾ inch) hole per C150, C250 or C300 section only is allowed to accommodate an up to 40mm waste water pipe

8.1.2. Distance between holes along the section shall be no less than 1000mm

8.1.3. Holes shall be located:

8.1.3.1. Central in the web, (within the centre 1/3 of the web depth)

8.1.3.2. At least 200mm from the end of a member

8.1.4. Rubber grommets to be applied to un-swaged service holes

8.1.5. Larger and more frequently spaced holes are allowed, however please consult with an engineer first for written approval to ensure compliance with AS/NZS 4600.

TOTALSPAN®
STEEL BUILDINGS

Project Ref: JH.309

© Copyright 2017 Spanbild NZ Ltd. All rights reserved.

Don Campbell
7 Swindon Lane
Amberley
7410
021 1521186

Gable Range - Design

Specifications

MANUFACTURERS STATEMENT - DURABILITY

Cladding

To satisfy the requirements of Clause B2:"Durability" of the NZBC and to ensure the cladding material meets a 15-year durability life and a 50 year intended working life (design life), the following requirements must be followed:

Cladding Range of Product and Use

- Coating Type: Zinc/Aluminium & Painted (Coloured Steel).
- Steel thickness range: 0.35mm - 0.55mm BMT
- Steel grade range: G300 - G550
- Application: Standard Totalspan Roof and Wall Cladding
- Profile: Totalspan 7 Rib, Totalspan 6 Rib, Totalspan Corrugate

Requirements

- Fixing and installation of the cladding must be done exactly in accordance with the manufacturer's instructions and specifications.
- Normal maintenance must be regularly carried out on the exterior surface of the cladding and visible internal surfaces of the cladding.The following guide must be followed to ensure the durability requirements are met.

Normal Maintenance

- Normal Maintenance to be completed in accordance with Durability - Acceptable Solution B2/AS 2.1.3
- Corrosion Zones C1 and C2 (Reference SNZ TS 3404:2018, Durability requirements for steel structures and components, corrosivity zone maps, Figure 1 – 7, page 10 – 16)

  Rain-washing only required on exposed (open to airborne salts and rain wetting) material. Sheltered (open to airborne salts, but not rain washed) or protected areas such as under spouting, top-cladding sheets and tops of doors and underside of Awnings and Garaports require washing every 3 months.

- Corrosion Zones C3 and C4 (Reference SNZ TS 3404:2018, Durability requirements for steel structures and components, corrosivity zone maps, Figure 1 – 7, page 10 – 16)

  Rain-washing only required on exposed (open to airborne salts and rain wetting) areas. Sheltered (open to airborne salts, but not rain washed) and protected areas such as under spouting, top cladding and tops of doors and underside of Awnings and Garaports require washing down every month and whenever corrosive salts are present.

Extended Maintenance, Painting or Repainting

Extended Durability

Once the metallic coating or the paint system has weathered away, signs of red rust for bare material or signs of the metallic coating for painted material, painting of the entire surface is required to extend the life of the cladding product. Paint manufacturers recommendations are to be followed for surface preparation and paint type to be used.

Evident Corrosion

- Areas that show signs of white or red rust/corrosion (typically in unwashed areas) require cleaning back with a stiff brush and cleaner to remove all dust, surface contaminants and corrosion products and present a sound substrate for painting. Priming of the surface and application of two coats of paint as per the Paint Manufacturer's recommendations is then required.
- Particular attention needs to be paid to laps (side, end, flashing etc) where earlier corrosion may start due to moisture and dirt entrapment.

  If evident corrosion is not treated quickly rapid deterioration of the sheet may occur which could result in perforation. At this stage replacement of the affected sheet is the best option.

Steel Framing

To satisfy the requirements of Clause B2:"Durability" of the NZBC and to ensure the structural framing material meets a 25-year durability for carports and a 50-year durability for all other buildings, the following requirements must be followed:

Steęl Framing Range of Product and Use

- Coating Type: Galvanised
- Steel thickness range: 0.55mm – 3.0mm BMT
- Steel grade range: G300 – G550
- Application: Standard Totalspan Purlins, Girts, Portal Frames, Door Jambs, Wall Uprights, Bridging, Posts

Profile:
C Sections – C80 to C300
Z Sections – 100x53, 150x65
Tophat Sections – 100x163, 120x170, 150x183
Square Hollow Sections - 65x65, 75x75

Requirements

- Regular inspections of the steel work and maintenance at the first signs of a problem will extend the durability of the sections.
  Where sections are exposed (open to airborne salts and rain wetting) or sheltered (open to airborne salts but not rain washed), or located in salt marine, corrosive industrial or unusually high corrosive enviromentsthe below Normal Maintenance must be adhered to. Please contact your local Totalspan branch for specialist advice if unsure requirements.
  This also applies to all Steelwork that is exposed to the wind but is protected from the rain located in an open sided structure such as carports, awnings or structures closed in on one side only.
  Maintenance is necessary when the Galvanised coating ceases to provide sacrificial protection to the steel base, or where the appearance is no longer aesthetically acceptable. At the first sign of corrosion or rust staining, the surface should be treated and painted with an appropriate coating system. All maintenance should be carried out in accordance with AS/NZS 2312:2002 (Incorporating Amendment No. 1) [c] and New Zealand Steelwork Corrosion Coatings Guide (HERA Report R4-133) [d].

Normal Maintenance

- Normal Maintenance to be completed in accordance with Durability - Acceptable Solution B2/AS 2.1.3

-Corrosion Zones C1 and C2 (Reference SNZ TS 3404:2018, Durability requirements for steel structures and components, corrosivity zone maps, Figure 1 – 7, page 10 – 16)

Rain-washing only required on exposed (open to airborne salts and rain wetting) sections.
Sheltered (open to airborne salts, but not rain washed)sections require washing every 3 months. All other materials should be inspected at the time of washing and if required, cleaned of any contaminants.

-Corrosion Zones C3 and C4 (Reference SNZ TS 3404:2018, Durability requirements for steel structures and components, corrosivity zone maps, Figure 1 – 7, page 10 – 16)

Rain-washing only required on exposed (open to airborne salts and rain wetting) sections
Sheltered (open to airborne salts, but not rain washed)sections require washing down every month and whenever corrosive salts are present. All other materials should be inspected at the time of washing and if required, cleaned of any contaminants.

Manufacturer:

Spanbild New Zealand Limited
112 Waterloo Rd
Sockburn
CHRISTCHURCH

TOTALSPAN®
STEEL BUILDINGS

Project Ref: JH.309

© Copyright 2017 Spanbild NZ Ltd. All rights reserved.

Don Campbell
7 Swindon Lane
Amberley
7410
021 1521186

Gable Range

Durability Statement

TOTALSPAN®

STEEL BUILDINGS

Project Ref: JH.309

© Copyright 2017 Spanbild NZ Ltd. All rights reserved.

Don Campbell
7 Swindon Lane
Amberley
7410
021 1521186

Gable Range

Site Plan

ROOF - (BAYS 2-1)

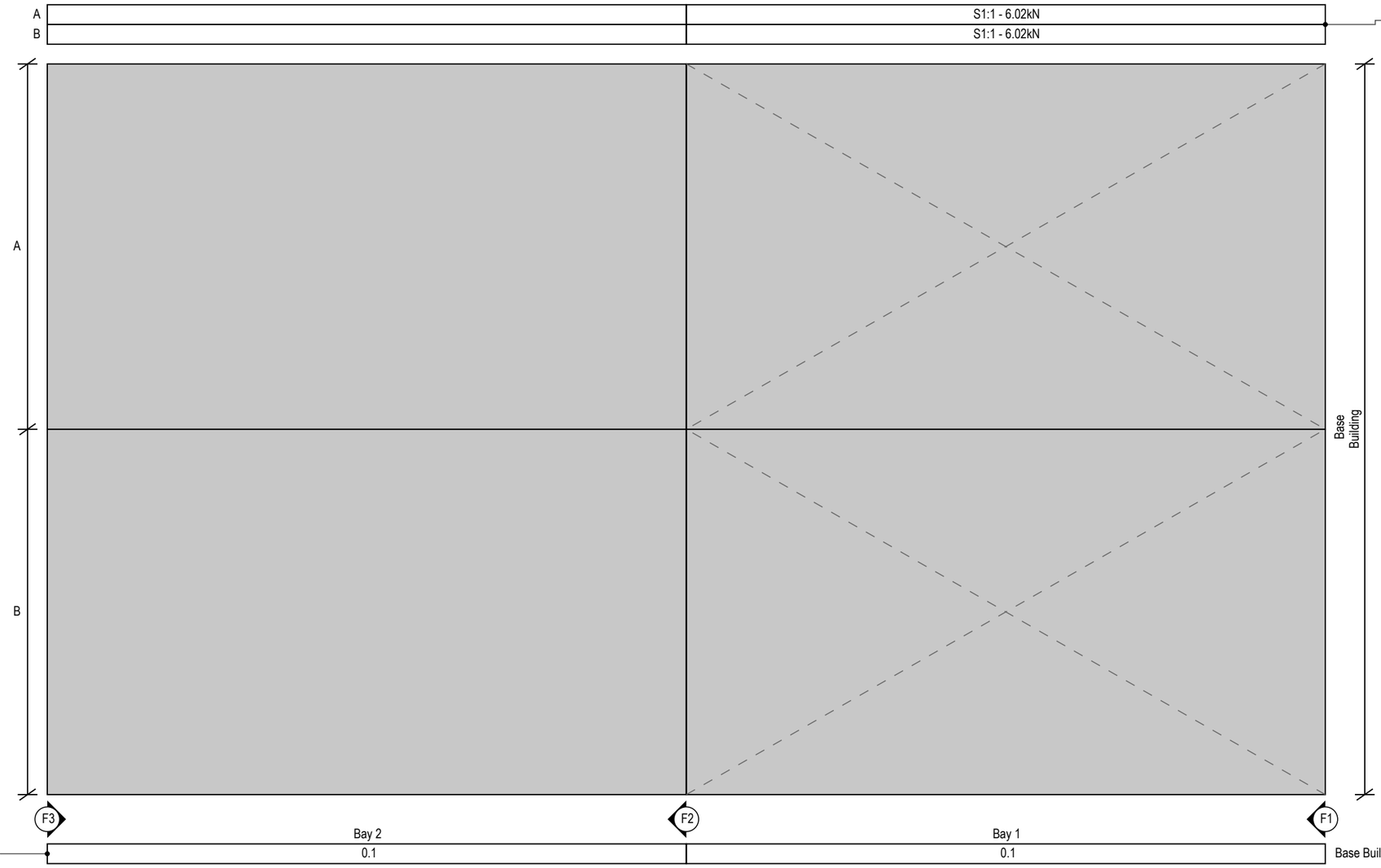

BRACING kN (Totals)		
Location	**Required**	**Achieved**
A	0.93 kN	6.02 kN
B	0.93 kN	6.02 kN

FRAMING SECTION TABLES	
Base Building - 0.1	
Design	Closed
Purlin (Bridge Count)	C100-10(1)
Purlin Centres	0.976m

BRACING DESIGN NOTES

All bracing must be connected to main structural members i.e. Portal Legs, Portal Rafters, End Wall, Uprights & Main Access Door Jambs. Bracing shall not be solely connected to intermediate members such as Girts, Purlins, Minor Access Door Jambs & PA Door Jambs.

BRACING LEGENDS

S1:1

Mitek Strip-Brace 27x0.6mm G550, configured as a single cross.

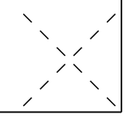

VIEWS

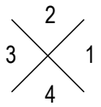

TOTALSPAN® STEEL BUILDINGS

Project Ref: JH.309

© Copyright 2017 Spanbild NZ Ltd. All rights reserved.

Don Campbell
7 Swindon Lane
Amberley
7410
021 1521186

Gable Range - Design

Engineering Tables

VIEW 2 - BUILDING SIDE (BAYS 1-2)

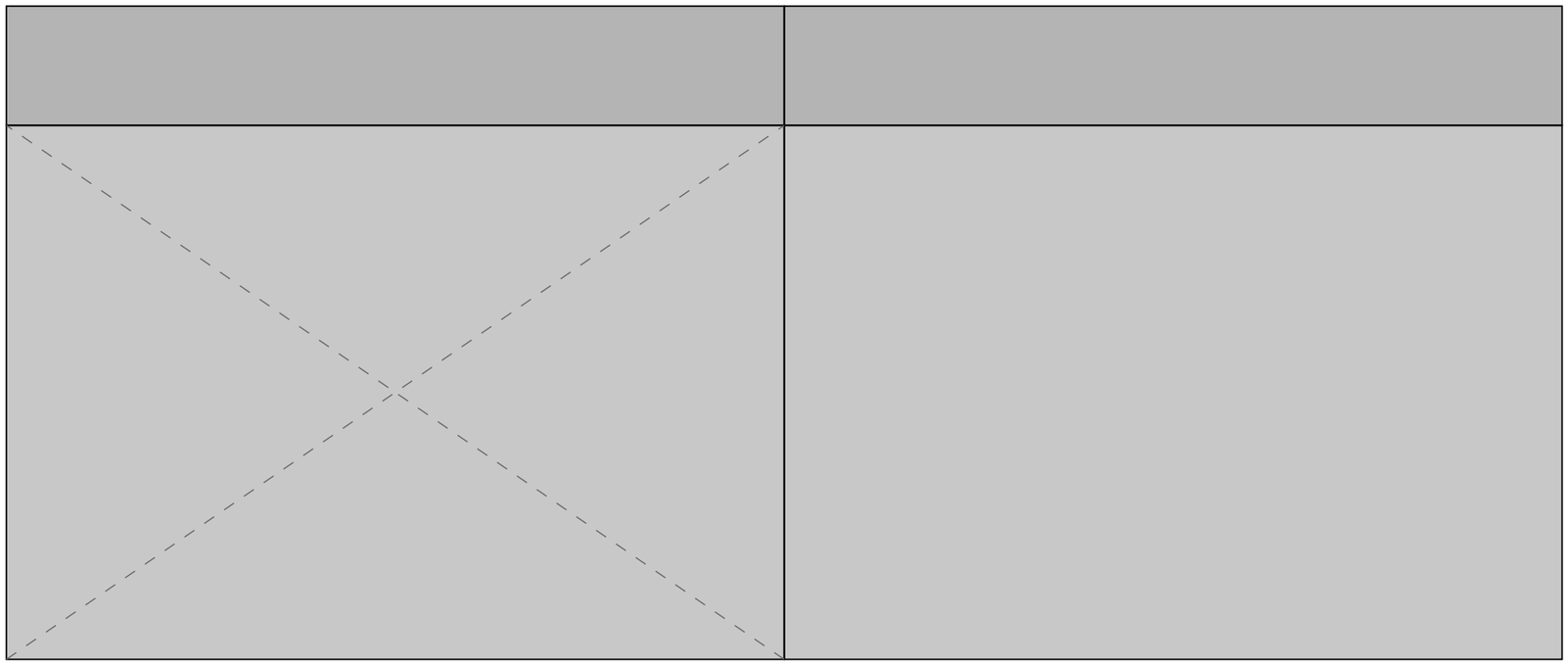

FRAMING SECTION TABLES	
Base Building - 2.1	
Design	Closed
Girt (Bridge Count)	C80-95(1)
Girt Centres	1.140m

	Bay 1	Bay 2
	2.1	2.1
	S1:1 - 5.77kN	

BRACING kN (Totals)	
Required	1.77 kN
Achieved	5.77 kN

VIEWS
2
3 1
4

TOTALSPAN® STEEL BUILDINGS

Project Ref: JH.309

© Copyright 2017 Spanbild NZ Ltd. All rights reserved.

Don Campbell
7 Swindon Lane
Amberley
7410
021 1521186

Gable Range - Design

Engineering Tables

VIEW 4 - BUILDING SIDE (BAYS 2-1)

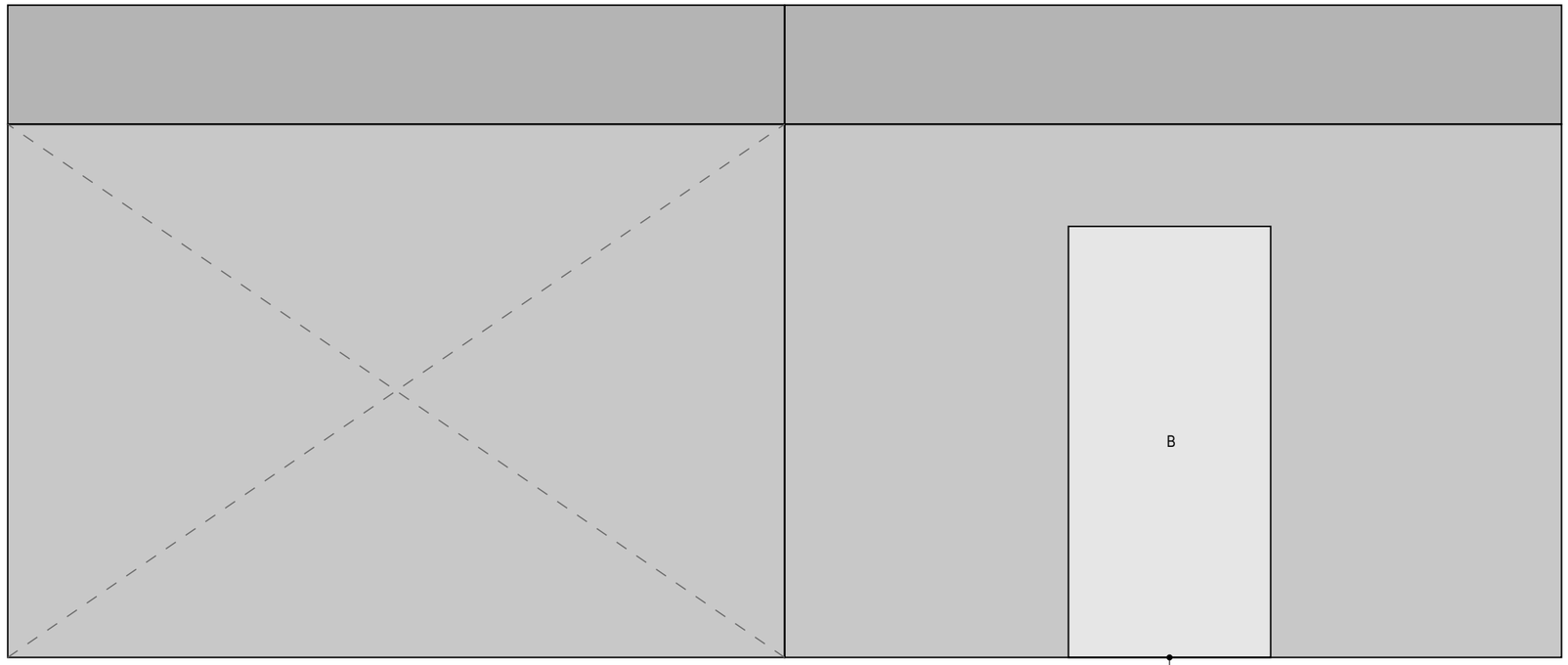

OPENING SECTION TABLES	
Opening - B	
Jambs & Head Beam	C80-95

FRAMING SECTION TABLES	
Base Building - 4.1	
Design	Closed
Girt (Bridge Count)	C80-95(1)
Girt Centres	1.140m

F3 F2 F1

	Bay 2	Bay 1
	4.1	4.1
	S1:1 - 5.77kN	

BRACING kN (Totals)	
Required	1.77 kN
Achieved	5.77 kN

VIEWS
2
3 1
4

TOTALSPAN® STEEL BUILDINGS

Project Ref: JH.309

© Copyright 2017 Spanbild NZ Ltd. All rights reserved.

Don Campbell
7 Swindon Lane
Amberley
7410
021 1521186

Gable Range - Design

Engineering Tables

FRAME F1

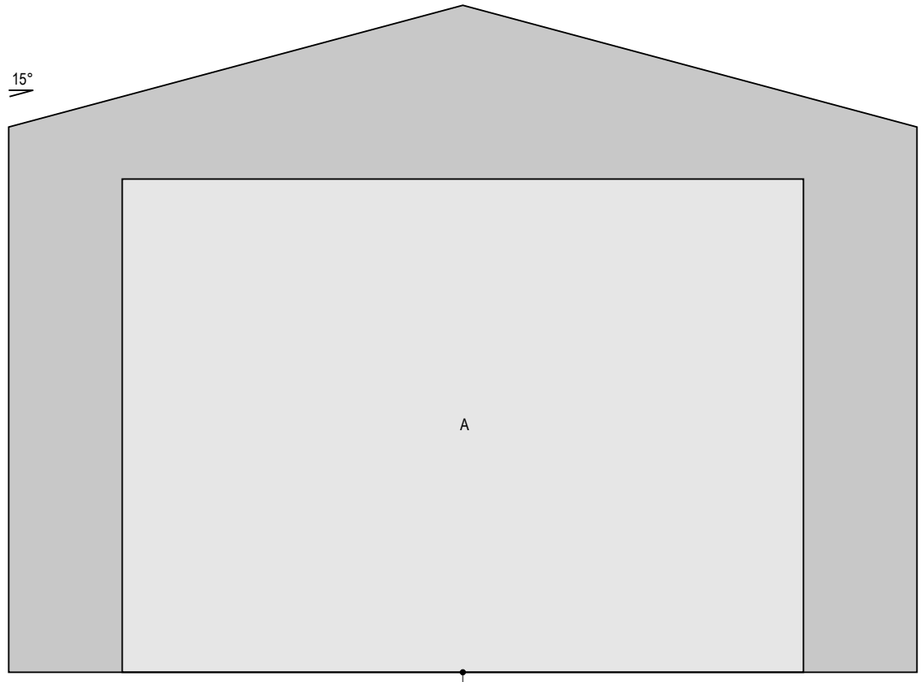

FRAMING SECTION TABLES	
Base Building - B.1	
Design	Closed
Leg & Rafter	C150-10
Girt	C80-75
Girt Centres	1.140m

OPENING SECTION TABLES	
Opening - A	
Jambs	C150-15
Head Beam	C150-10

VIEWS
2
3 1
4

TOTALSPAN® STEEL BUILDINGS

Project Ref: JH.309

© Copyright 2017 Spanbild NZ Ltd. All rights reserved.

Don Campbell
7 Swindon Lane
Amberley
7410
021 1521186

Gable Range - Design

Engineering Tables

FRAME F2

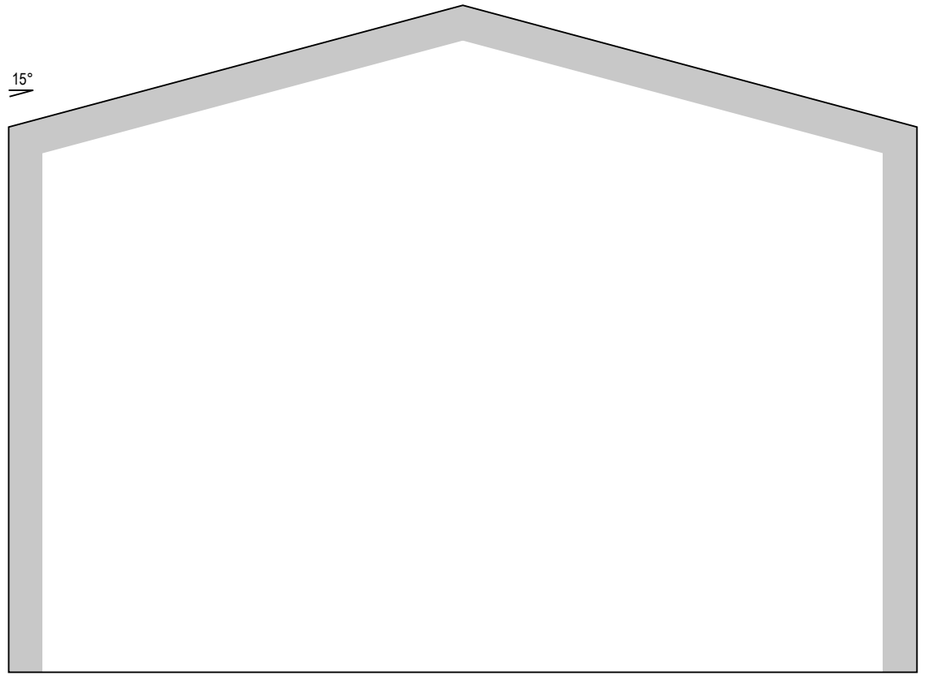

FRAMING SECTION TABLES	
Base Building - B.2	
Design	Closed
Leg & Rafter	C150-10

Base Building
B.2

VIEWS
2
3 1
4

TOTALSPAN STEEL BUILDINGS

Project Ref: JH.309

© Copyright 2017 Spanbild NZ Ltd. All rights reserved.

Don Campbell
7 Swindon Lane
Amberley
7410
021 1521186

Gable Range - Design

Engineering Tables

FRAME F3

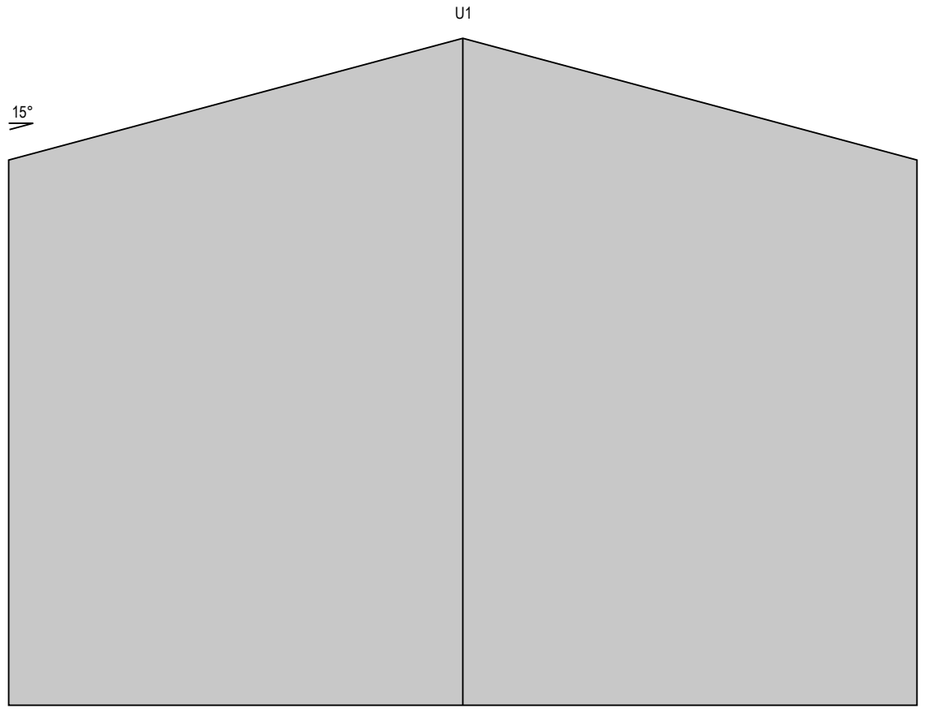

FRAMING SECTION TABLES	
Base Building - B.3	
Design	Closed
Leg & Rafter	C150-10
Upright - U1	C80-95
Girt	C80-75
Girt Centres	1.140m

VIEWS
2
3 1
4

TOTALSPAN® STEEL BUILDINGS

Project Ref: JH.309

© Copyright 2017 Spanbild NZ Ltd. All rights reserved.

Don Campbell
7 Swindon Lane
Amberley
7410
021 1521186

Gable Range - Design

Engineering Tables

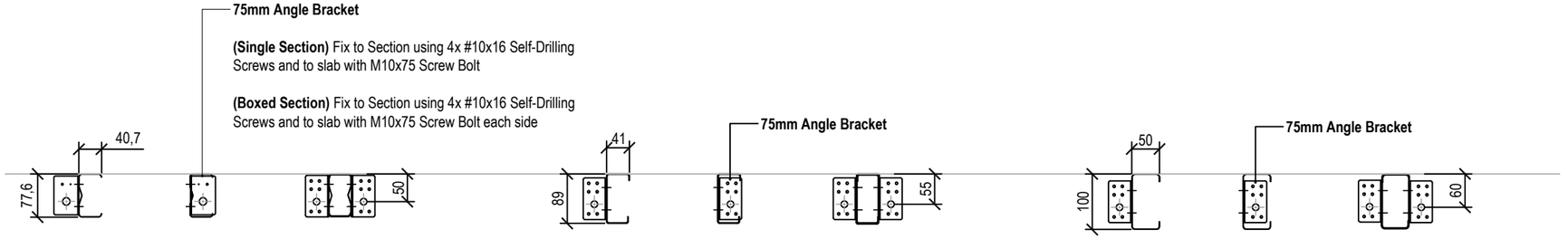

- **C80 Foundation Connections**
  SCALE 1:10

- **C90 Foundation Connections**
  SCALE 1:10

- **C100 Foundation Connections**
  SCALE 1:10

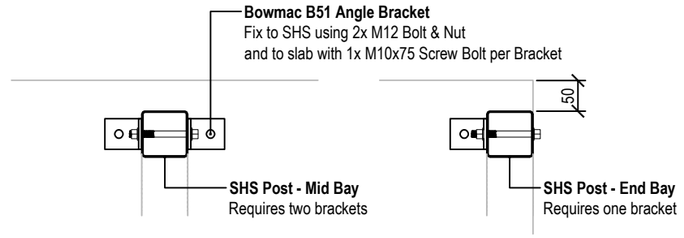

- **SHS Foundation Connections**
  SCALE 1:10

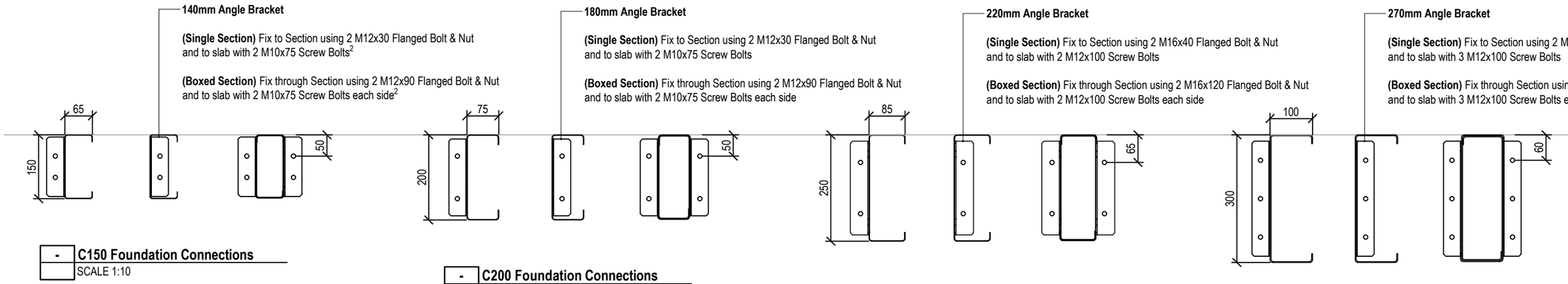

- **C150 Foundation Connections**
  SCALE 1:10

- **C200 Foundation Connections**
  SCALE 1:10

- **C250 Foundation Connections**
  SCALE 1:10

- **C300 Foundation Connections**
  SCALE 1:10

Important Notes

1. Recommended edge distances are listed above, brackets may be repositioned slightly +/- 3mm however concrete edge distance to bolt centre shall not be less than be 50mm
2. **C/B150-15 & C/B150-19 Portal Legs** shall have a M10x38mm Sqaure Washer to M10x75 Screw Bolts (otherwise, not required.)

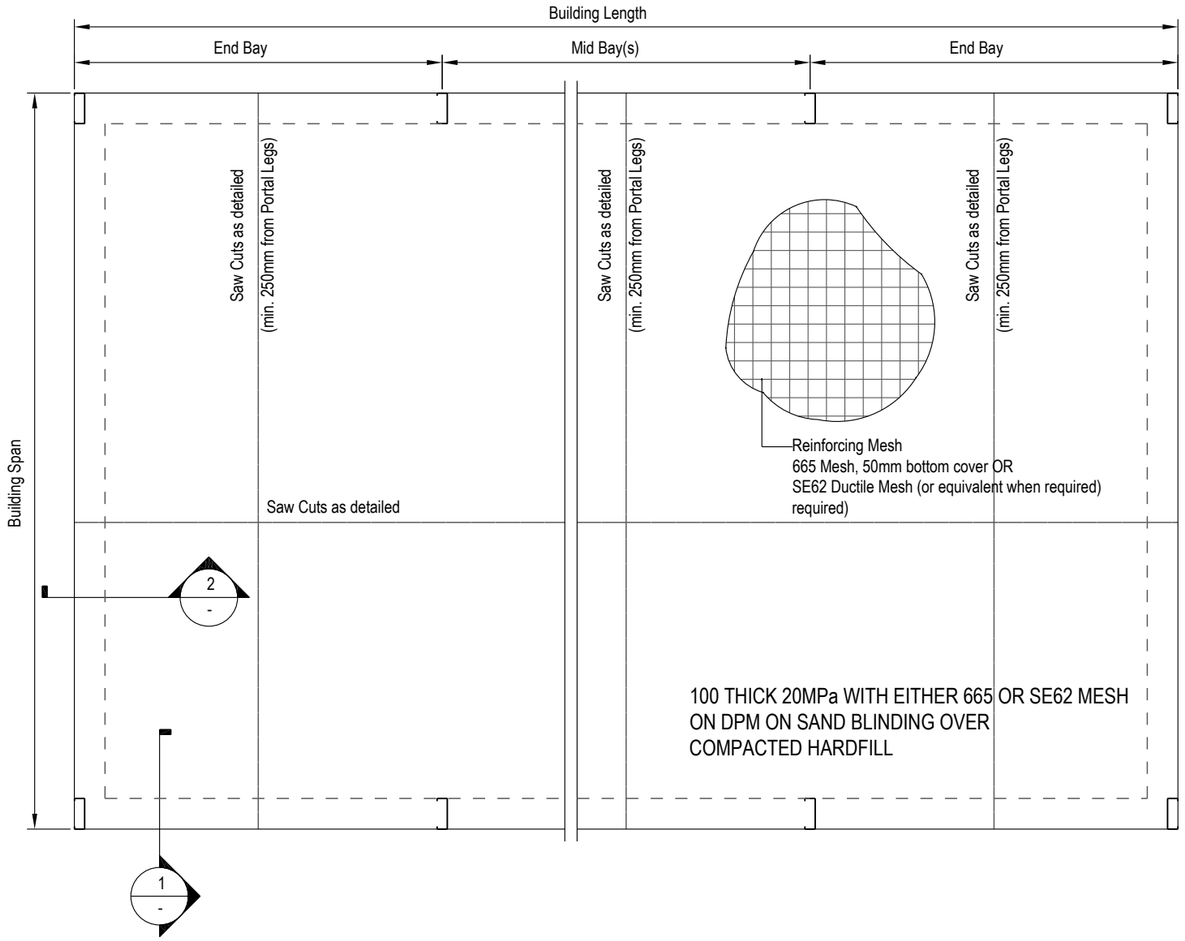

- **INDICATIVE SLAB PLAN (FOR NOTATION REFERENCE ONLY)**
SCALE 1:50

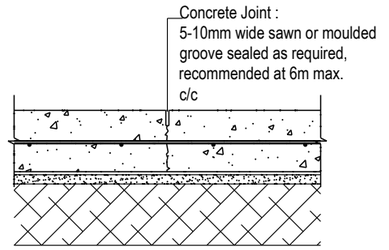

- **TIED JOINT / SAW CUTS**
SCALE 1:10

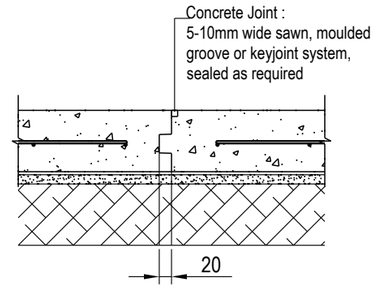

- **FREE KEYED JOINT**
SCALE 1:10

Important Notes

1. **Perimeter reinforcing**
   1.1. **Central reinforcing specified "along" building length;** shall continue "across" building span
   1.2. **Top and Bottom reinforcing specified "along" building length;** the lesser reinforcing specified (where applicable) shall be used for single central reinforcing "across" building span. Reinforcing "across" shall wrap around the corners 600mm to remain "continuous".
2. Slab thickness may be increased only in case of large machinery, equipment where heavier traffic loadings are required. Check control joint requirements as per CCANZ guidelines and install where recommended.
3. This slab has been designed in accordance with NZS3101:2006 and compliant to where lesser ductile mesh may be used per clause 5.3.2.7 (a) where "The yielding of reinforcement will not occur at the ultimate limit state".
4. Typical GL to FFL is 100mm for a "non-habitable" foundation.
5. Saw cuts to be minimum 250mm away from Portal Legs.
6. In areas where soil bearing is less than 225kPa UBC, excavate trench (max 600mm depth) to ground with 225kPa UBC and backfill with compacted hardfill.

Maximum Spacing of Free Joints (m) - as per CCANZ guidelines			
Steel	100mm Slab	120/125mm Slab	150mm Slab
665	26	21	17
663	37	30	25
661			35

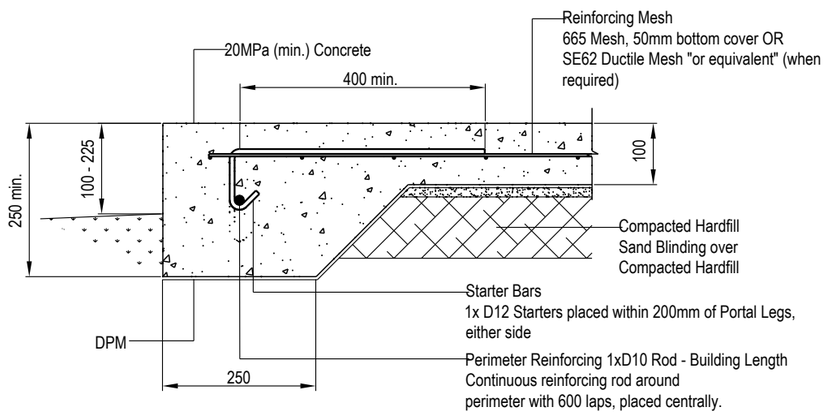

1 - **100MM FOUNDATION (CENTRAL REINFORCING)**
SCALE 1:10

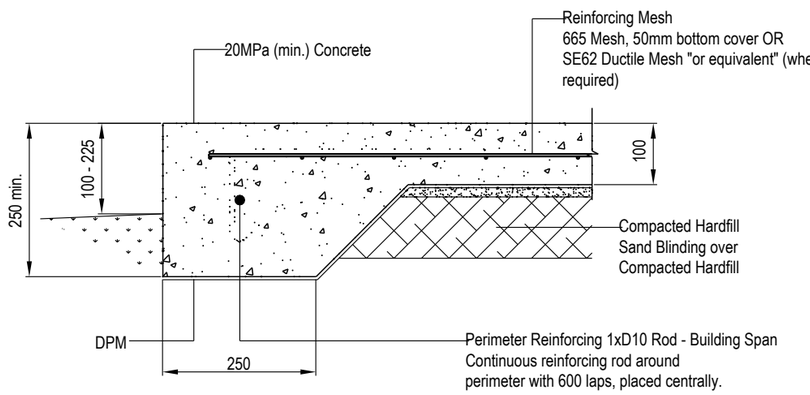

2 - **100MM FOUNDATION (CENTRAL REINFORCING)**
SCALE 1:10

TOTALSPAN®
STEEL BUILDINGS

Project Ref: JH.309

© Copyright 2017 Spanbild NZ Ltd. All rights reserved.

Don Campbell
7 Swindon Lane
Amberley
7410
021 1521186

Gable Range - Design

Foundation Details SD-F02

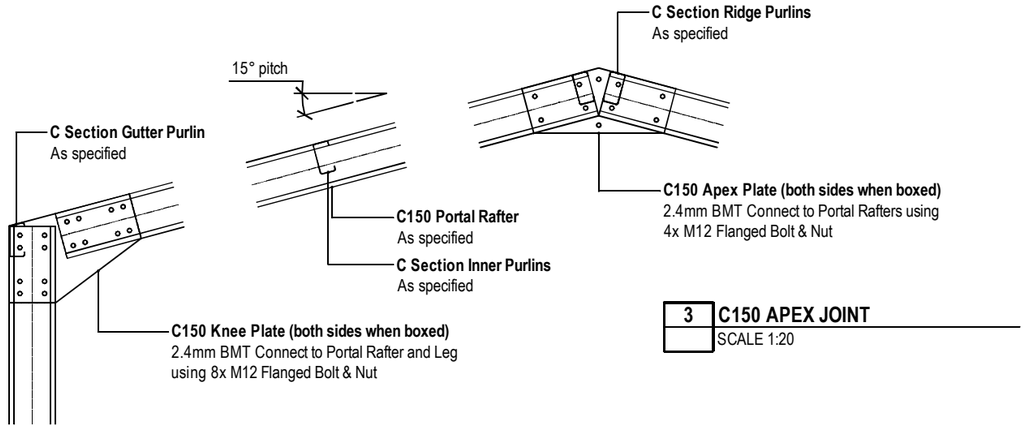

3 C150 APEX JOINT
SCALE 1:20

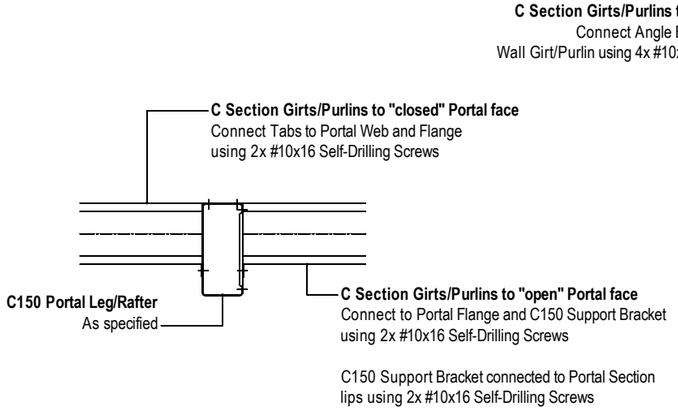

6 GIRT/PURLIN TABBED CONNECTION
SCALE 1:10

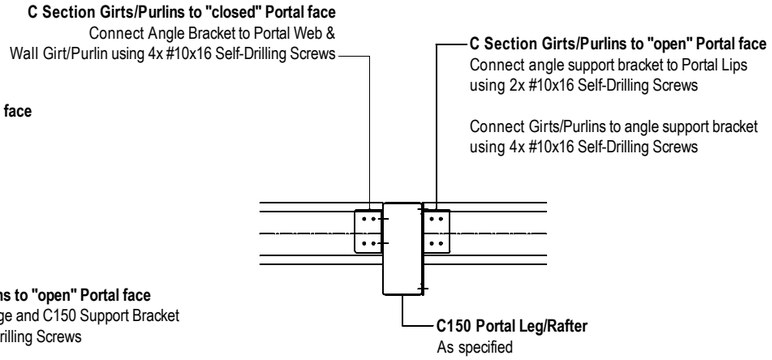

7 GIRT/PURLIN BRACKET CONNECTION
SCALE 1:10

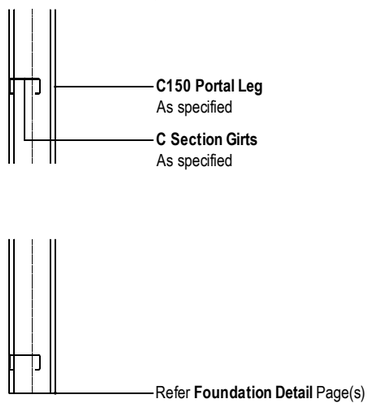

2 C150 KNEE JOINT
SCALE 1:20

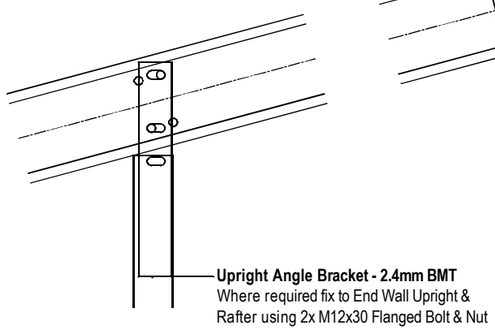

5 UPRIGHT TO RAFTER CONNECTION
SCALE 1:10

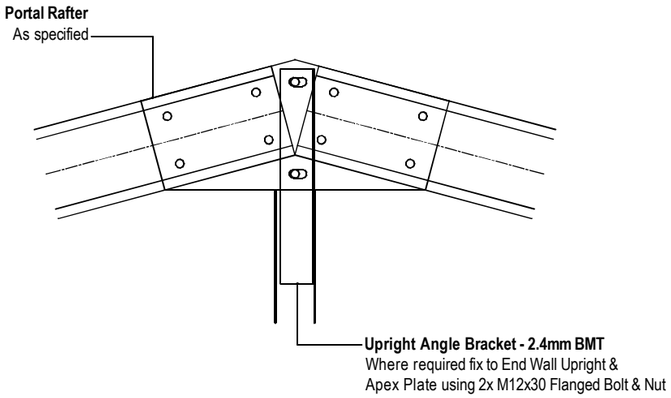

4 UPRIGHT TO APEX CONNECTION
SCALE 1:10

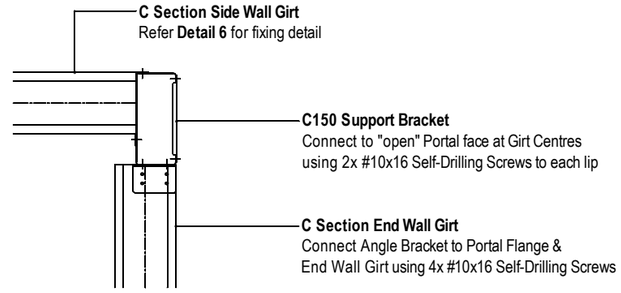

8 END WALL GIRT CONNECTION
SCALE 1:10

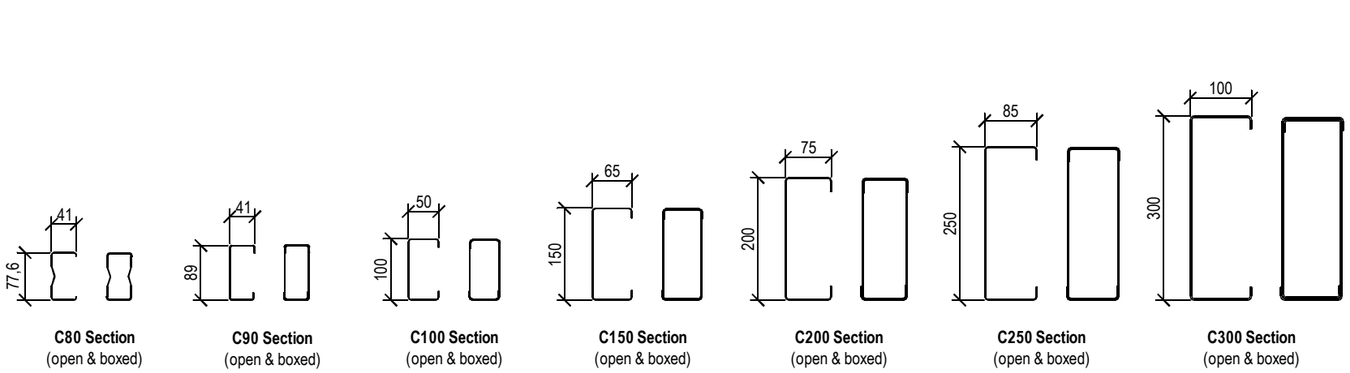

- C SECTION PROFILES (INCL. BOXING)
SCALE 1:20

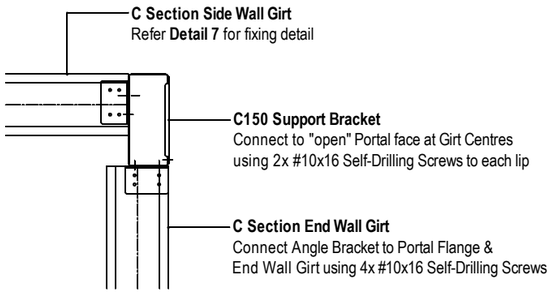

9 END WALL GIRT CONNECTION
SCALE 1:10

TOTALSPAN®
STEEL BUILDINGS

Project Ref: JH.309

© Copyright 2017 Spanbild NZ Ltd. All rights reserved.

Don Campbell
7 Swindon Lane
Amberley
7410
021 1521186

Gable Range - Design

Frame Details SD-P01

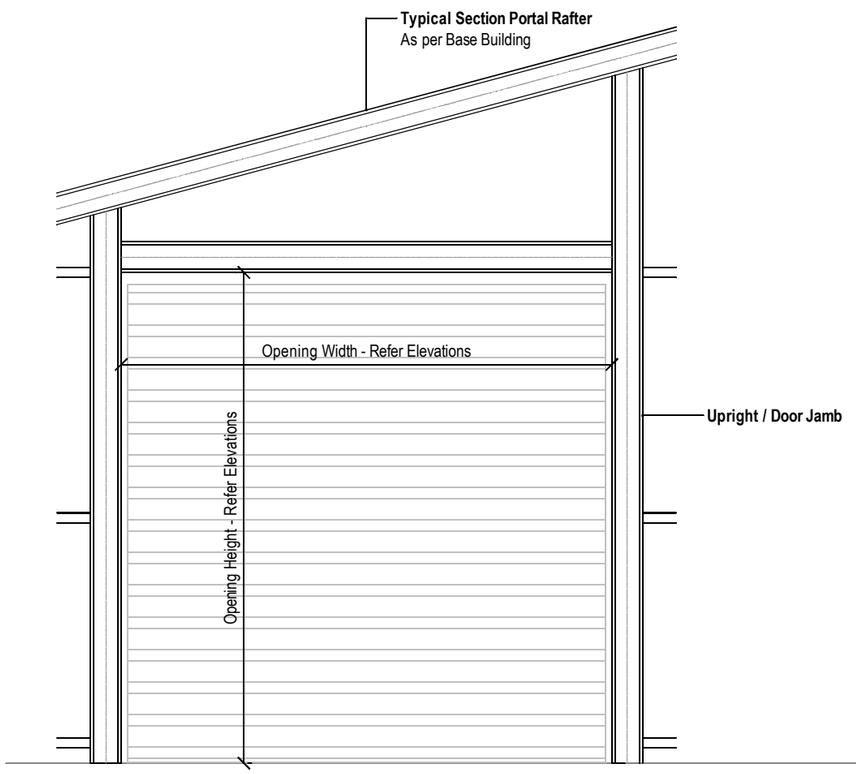

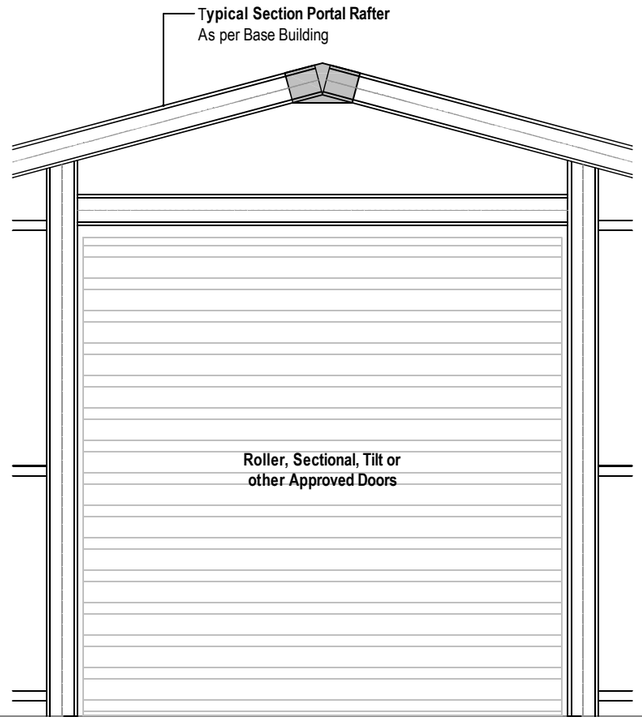

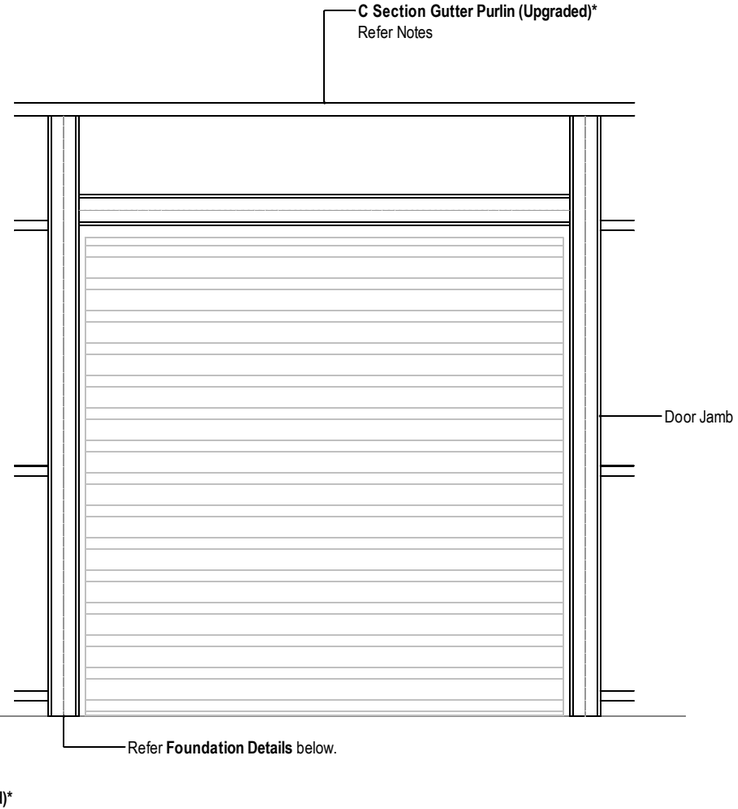

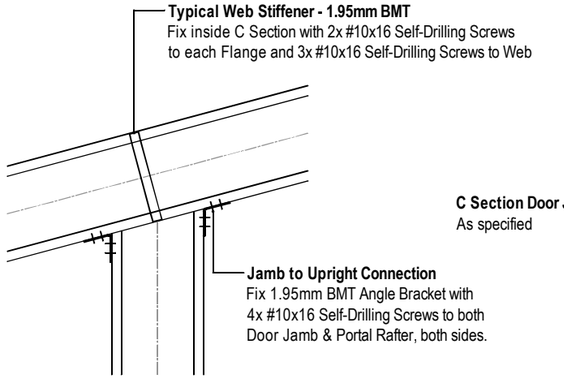

- **DOOR JAMB/UPRIGHT TO RAFTER CONNECTION**
  SCALE 1:10

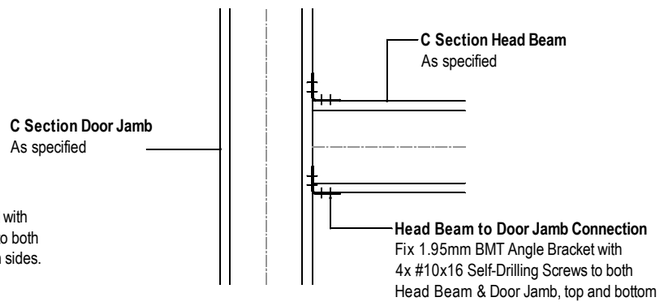

- **HEAD BEAM TO DOOR JAMB CONNECTION**
  SCALE 1:10

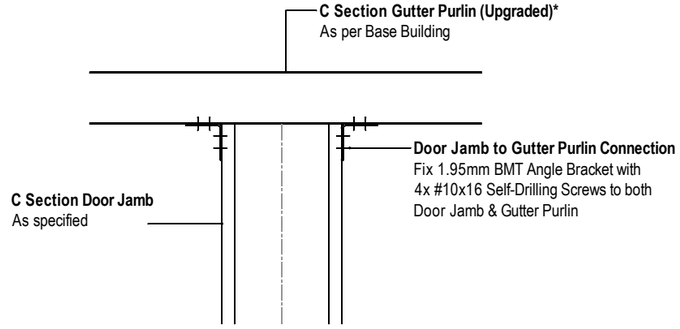

- **HEAD BEAM TO GUTTER PURLIN CONNECTION**
  SCALE 1:10

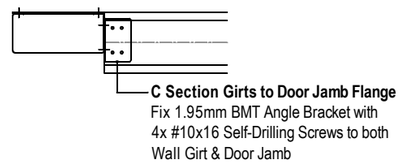

- **GIRT TO DOOR JAMB CONNECTION**
  SCALE 1:10

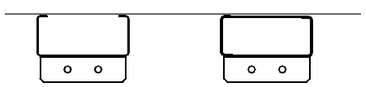

C150 Section Door Jambs
(open or boxed options)

- **C150 Jamb to Foundation Connections**
  SCALE 1:10

TOTALSPAN®
STEEL BUILDINGS

Project Ref: JH.309

© Copyright 2017 Spanbild NZ Ltd. All rights reserved.

Don Campbell
7 Swindon Lane
Amberley
7410
021 1521186

Gable Range - Design

Major Openings SD-M01

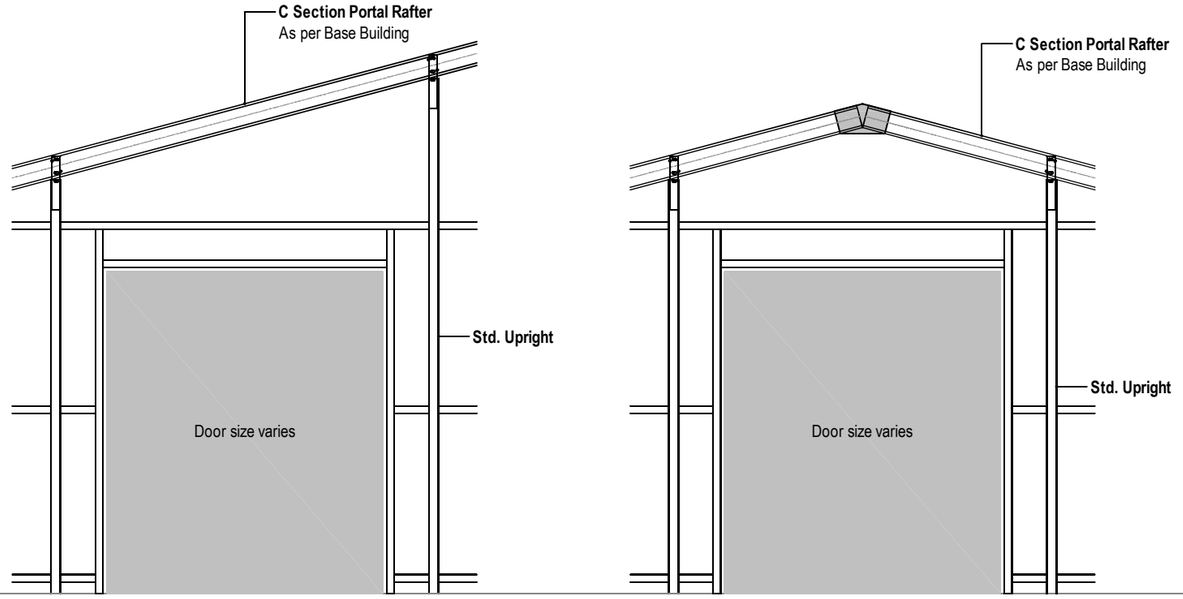

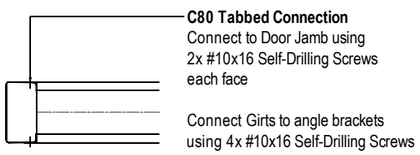

- C SECTION TABBED CONNECTION
SCALE 1:10

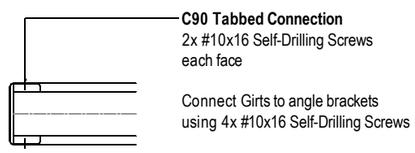

- C SECTION NOTCHED CONNECTION
SCALE 1:10

TOTALSPAN®
STEEL BUILDINGS

Project Ref: JH.309

© Copyright 2017 Spanbild NZ Ltd. All rights reserved.

Don Campbell
7 Swindon Lane
Amberley
7410
021 1521186

Gable Range - Design

Minor Door Openings SD-M05

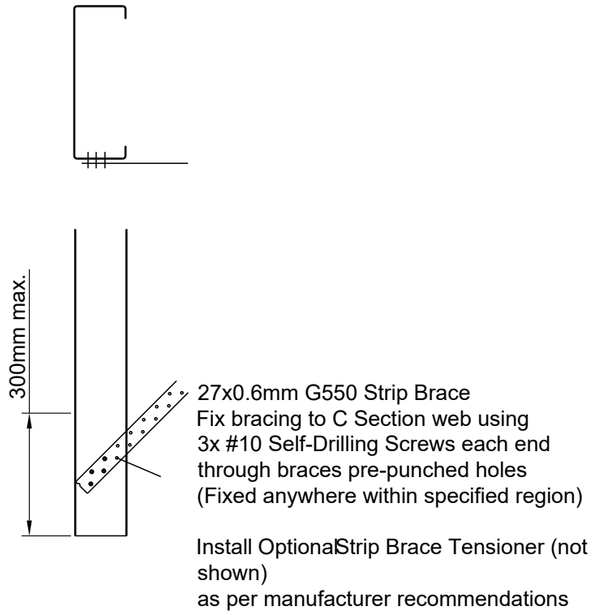

- SINGLE STRIP BRACE FIXING
SCALE 1:10

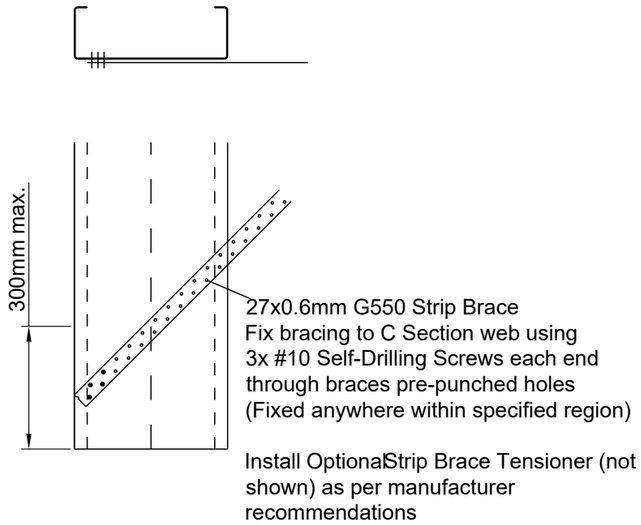

- SINGLE STRIP BRACE FIXING
SCALE 1:10

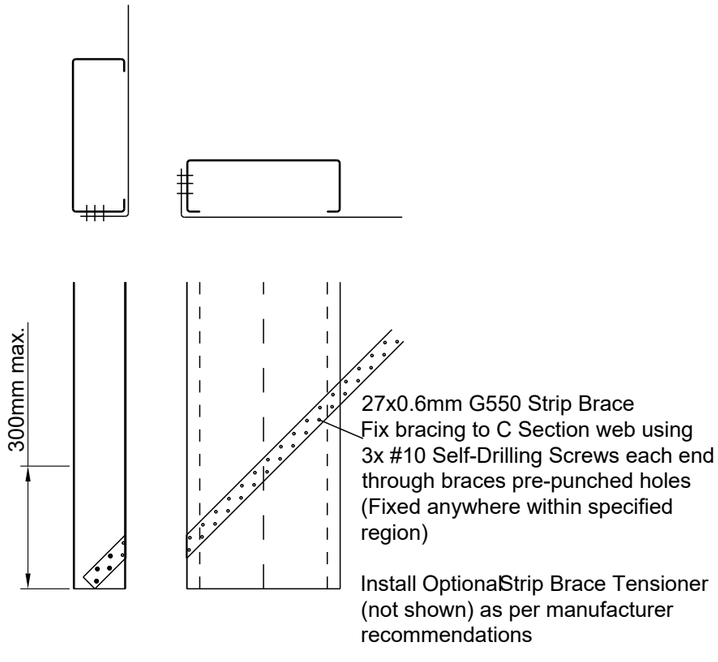

- SINGLE STRIP BRACE FIXING
SCALE 1:10

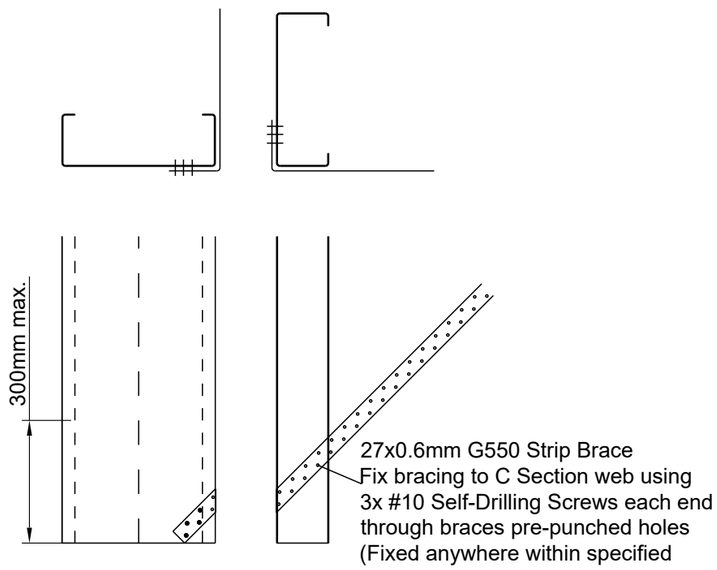

- SINGLE STRIP BRACE FIXING
SCALE 1:10

TOTALSPAN®
STEEL BUILDINGS

Project Ref: JH.309

© Copyright 2017 Spanbild NZ Ltd. All rights reserved.

Don Campbell
7 Swindon Lane
Amberley
7410
021 1521186

Gable Range - Design

Bracing Details

Sheet 17 of 19

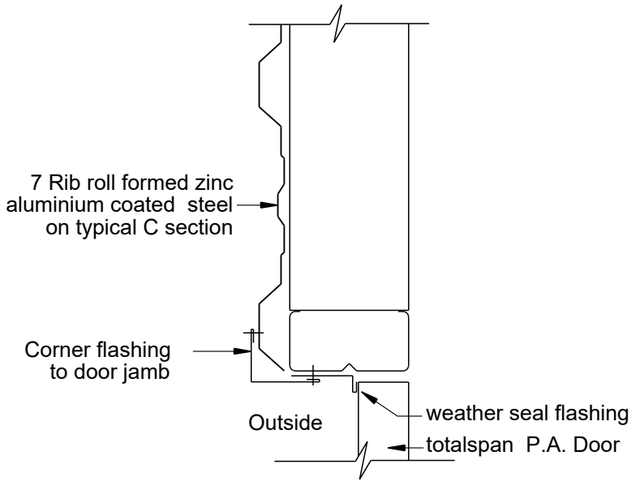

- **P.A. Door Jamb Detail**
SCALE: NTS

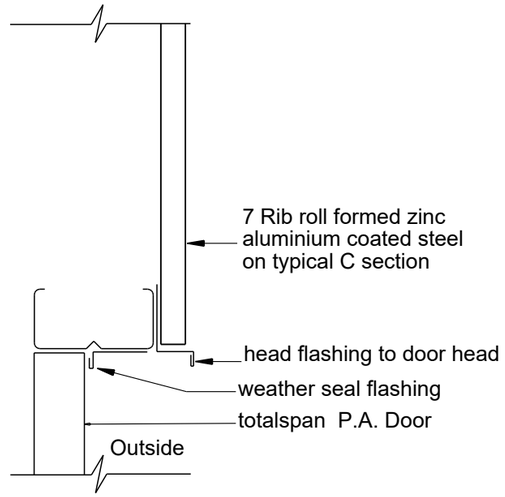

- **P.A. Door Head Detail**
SCALE: NTS

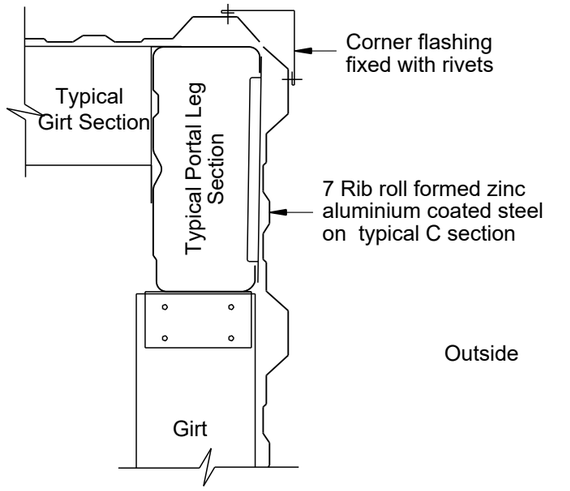

- **External Corner**
SCALE: NTS

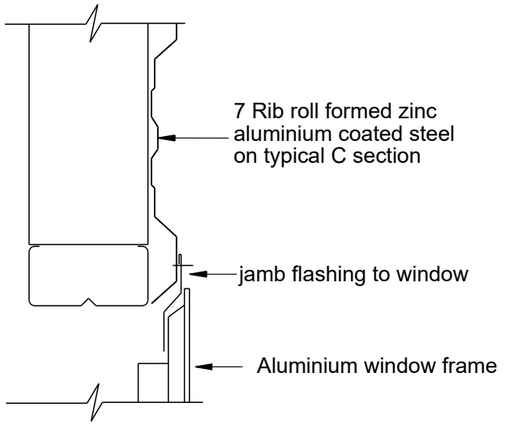

- **Window Jamb Detail**
SCALE: NTS

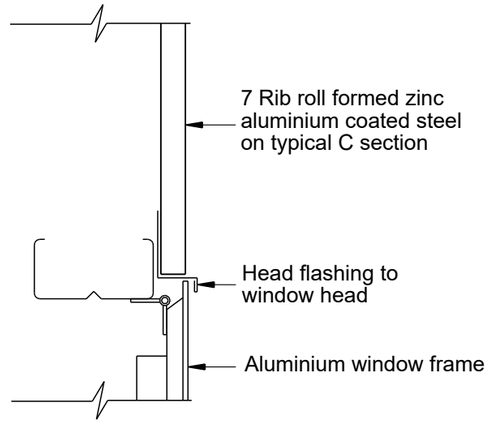

- **Window Head Detail**
SCALE: NTS

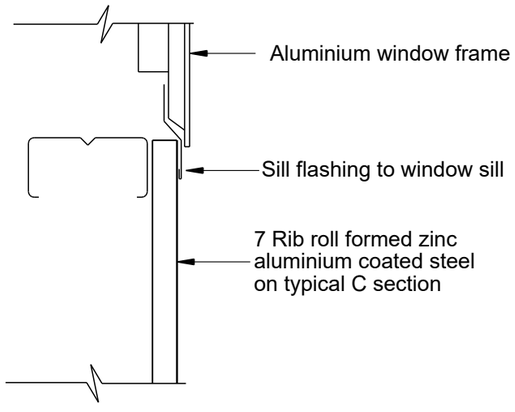

- **Window Sill Detail**
SCALE: NTS

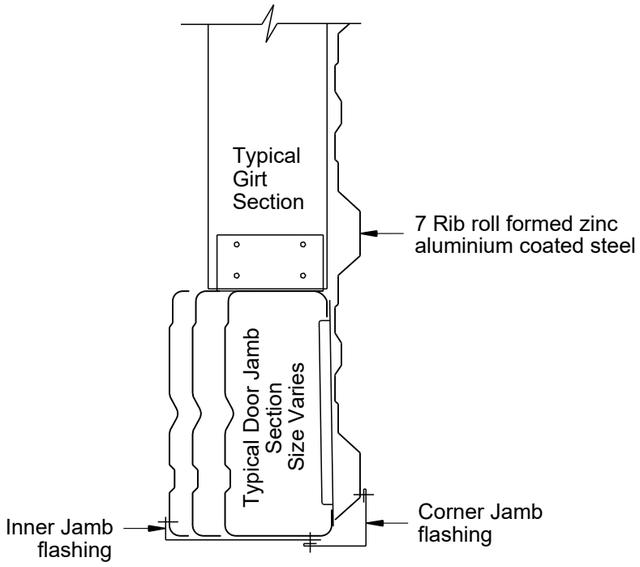

- **Main Access Door Jamb Detail**
SCALE: NTS

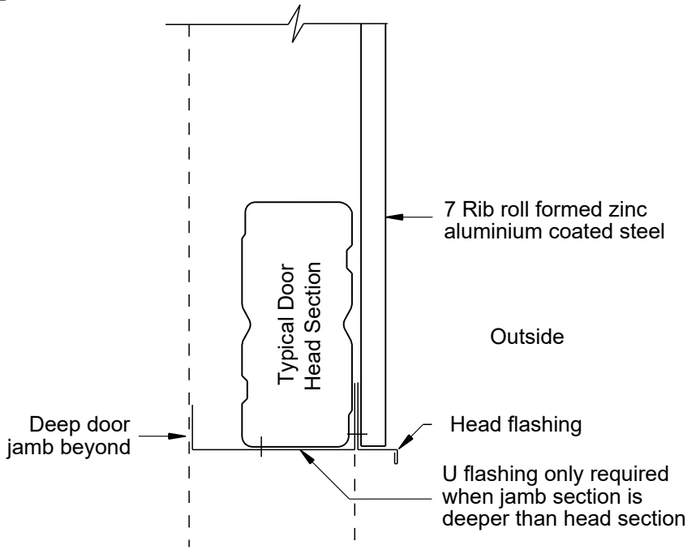

- **Main Access Door Head Detail**
SCALE: NTS

TOTALSPAN®
STEEL BUILDINGS

Project Ref: JH.309

© Copyright 2017 Spanbild NZ Ltd. All rights reserved.

Don Campbell
7 Swindon Lane
Amberley
7410
021 1521186

Gable Range

Flashing Details

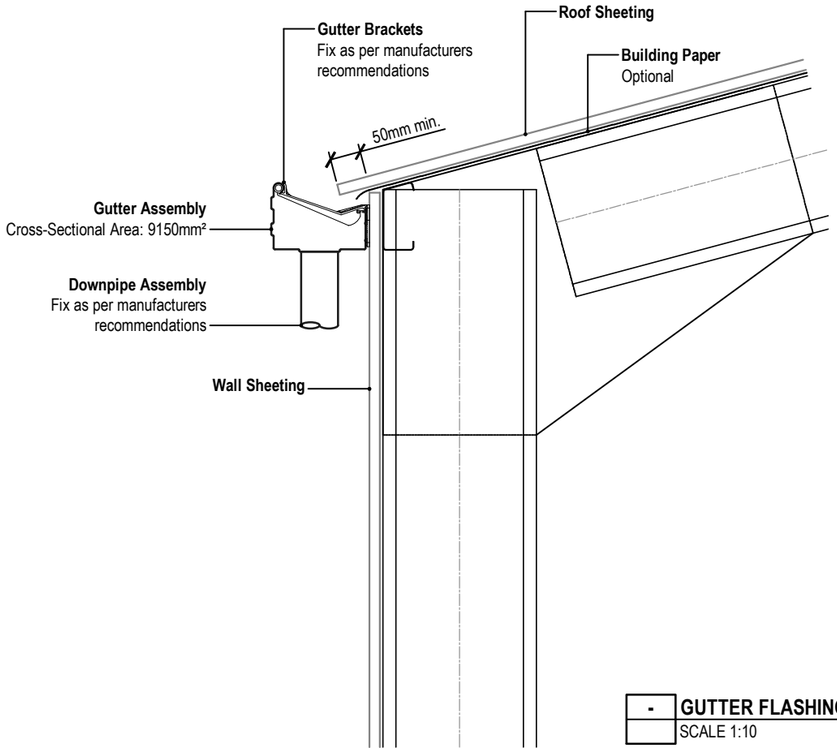

- **GUTTER FLASHING DETAIL**
SCALE 1:10

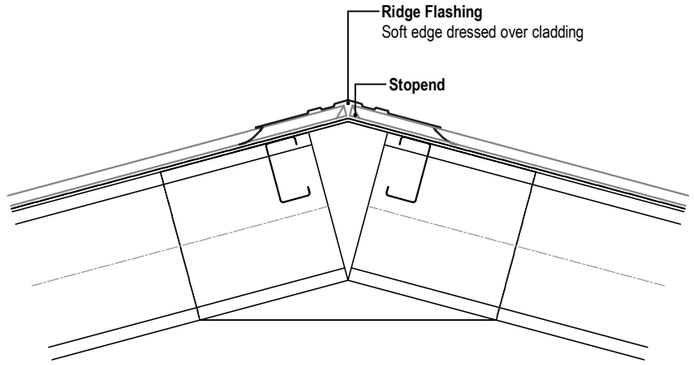

- **RIDGE FLASHING DETAIL**
SCALE 1:10

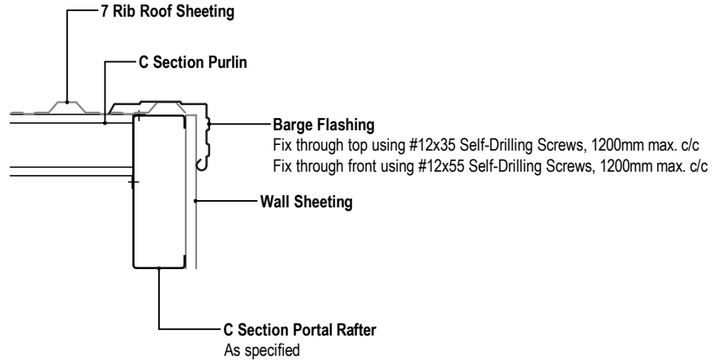

- **BARGE FLASHING DETAIL**
SCALE 1:10

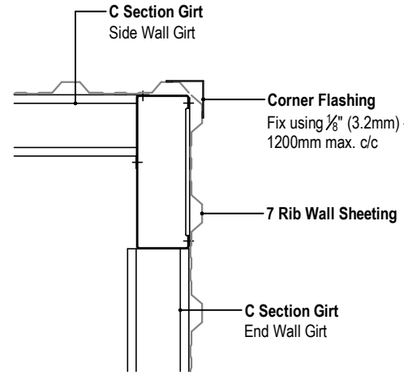

- **CORNER FLASHING DETAIL**
SCALE 1:10

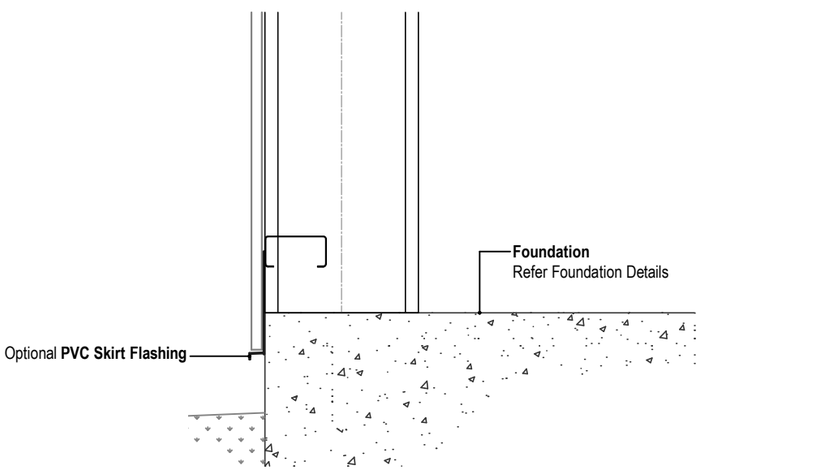

- **SKIRT FLASHING DETAIL**
SCALE 1:10

Important Design Notes

1. Roof and Wall Sheeting shall be 0.35 - 0.55 B.M.T, AZ150 Coating, G550 Steel only. Alternative claddings (excluding light-weight translucent panel i.e. Ampelite), require an independent specific design certificate for the scope of work.
2. Wall Cladding to have minimum 50mm cover and 40mm min. clearance to ground level
3. Fixing pattern as per E2/AS1 or NZ MRM - NZ Metal Roof and Wall Cladding Code of Practice.
4. Flashings shall be fixed as per manufacturers recommendations.
5. Additional options may include:
   - 5.1. Snow straps for gutters
   - 5.2. Gutter purlin flashing
   - 5.3. Building paper in walls

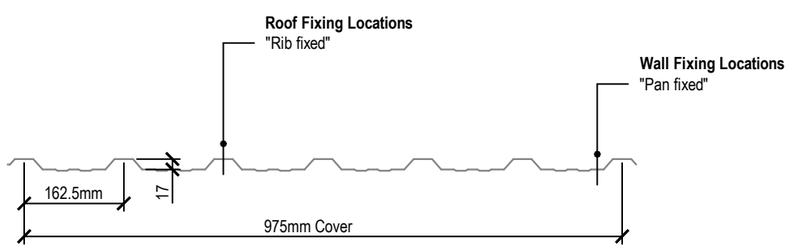

- **7 RIB CLADDING PROFILE**
SCALE 1:10

TOTALSPAN®
STEEL BUILDINGS

Project Ref: JH.309

© Copyright 2017 Spanbild NZ Ltd. All rights reserved.

Don Campbell
7 Swindon Lane
Amberley
7410
021 1521186

Gable Range

Flashing Detail SD-E01

Building Consent - Form 2 - 250126

Submission Details

Submission Ref	HURUN200525
Status	Lodged
Project Description	construction of an IL1 steel framed and steel clad Totalspan building on a concrete slab
Building Complexity	R1
Date Submitted	Tue 15 Apr 2025, 2:43 PM
Building Consent Authority	Hurunui District Council
Site Address	7 Swindon Lane, Amberley
Consent Number	250126
Submitter	Totalspan North Canterbury (Stephanie Carter)
Legal Description	LOT 6 DP 79189

Building Consent - Form 2

Application for project information memorandum and/or building consent
Section 33 or section 45, Building Act 2004

How to complete this form:

1. Completed sections turn green
2. The submit button become available after all sections has been completed
3. Required fields are marked with an asterisk (*)
4. You can save and close the application if you need to complete it later
5. The review and submit buttons takes you to the final step before you submit the application.

HURUN

What Are You Applying For

What are you applying for. Select all that apply. *

☑ Building Consent	☐ Project Information Memorandum (PIM)
☐ National Multiproof Building Consent	☐ Staged Building Consent

What Building Work Are You Doing

What type of building work are you doing *

◉ Residential	○ Multi-Residential	○ Commercial / Industrial

Residential *

☐ New detached dwelling	☐ Plumbing works	☐ Major alterations / additions - any work that includes altering or attaching to the exterior of a building
☐ Minor alterations - any internal work that does not include altering the exterior of the building	☑ Garage / detached carport	☐ Seismic strengthening
☐ Other		

Select all applicable boxes. If your building work is not listed, select Other and provide details.

Does the design feature a modular component by an accredited manufacturer as per the BuiltReady scheme?

○ Yes	◉ No

Where Is The Building Work

What is the street address *

7 Swindon Lane, Amberley

Legal Description *

LOT 6

Deposited Plan

DP 79189

Building Name

Location of building within site/block including near street access

as per attached site plan

Are you building in a zone that requires a land-use Resource Consent *

○ Yes	◉ No

Is the subdivision of an existing site involved *

○ Yes	◉ No

Does the building or site have any cultural or heritage significance, or is it a marae? *

○ Yes	◉ No

Who Owns The Building Or Land

Owner name *

Donald Melvern Campbell and Alison Teresa Campbell

If the property is owned by an organisation, capture the organisation's name.

Owner title

Owner's contact person

Required if the owner is an organisation

Owner email address *

alidonnz@gmail.com

Owner contact number *

0211521186

Owner mobile number

Owner's street address *

7 Swindon Lane
Amberley

Owner mailing address *

7 Swindon Lane
Amberley

Proof of Ownership

The Building (Forms) Regulations 2004 requires evidence of ownership to be provided, proof of ownership less than 3 months old ensures the ownership is current.

Proof of ownership *

- (•) Record of Title (RT)
- ( ) Other

Click here to request a RT from from Land Information New Zealand.

Check you have a Record of Title for the property and that the legal description entered on the application form matches that on the on the Record of Title (RT)
Other things to note when obtaining a Record of Title (RT)
- The RT must be no more than Three Months Old
- The RT must be provided by LINZ and have the Registrar of Land Stamp, the Legal Description, the Owner name and the date of access stated on it. Titles can be ordered through the LINZ website for $15 each.
- If the RT is not up to date due to a recent purchase then a Sale and Purchase agreement can be provided in tandem with the RT but only if the agreement is no more than three months old
- If the application is being made by a tenant, then the lease agreement can be provided as proof of ownership in tandem with an RT that is less than three months old and has the name of the owner on it.
- If the building work is for a building subdivided into unit titles and the building work is to take place in the common area, eg. The owner is the BodyCorp, either the title for the underlying land needs to be provided (if available) or a Unit Title RT with an owner on and the Supplementary Record Sheet which will have the legal description for the underlying land and the list of Unit Titles on it.

Request a Record of Title (RT) from the Building Consent Authority (BCA) or Council *

- ( ) Yes
- (•) No

Check with the Building Consent Authority (BCA) before requesting a RT directly from them.

Who Is The Applicant

Is the application being made on behalf of the owner *

◉ Yes	○ No

Agent Contact Information

Please note that the nominated first point of contact must be in New Zealand.

Who should the invoice be sent to? *

○ Owner	◉ Agent	○ Other

Who is the first point of contact for further correspondence *

○ Owner	◉ Agent	○ Other

Who should invoices be made out to? *

◉ Owner	○ Agent	○ Other

Agent name *

Totalspan North Canterbury

Agent title

If the agent is an organisation, capture the organisation's name

Agent's contact person

Stephanie Carter

Required if the agent is an organisation

Agent's relationship to owner *

owner has authorised us to be their agent on this project

Agent email address *

northcanterbury@totalspan.co.nz

Agent contact number *

033100247

Agent mobile number

Agent's street address *

127 Main North Road,
Woodend 7610,
New Zealand

Agent mailing address *

P O Box 58,
Woodend 7641,
New Zealand

Who's Involved In The Build

Please supply names, registration and contact details of the designer, architect, structural engineer and other key individuals involved in your project (such as carpenter, plumber, gasfitter).

For commercial applications, the details of the fire safety designer who produced the ‘fire report’ must be provided.

Select who's involved *

☐ Licensed Building Practitioner	☑ Other

Are non licenced building practitioners involved in the project? Select Other and provide their details.

Other Trades

Name * Totalspan North Canterbury

Company

Email address * northcanterbury@totalspan.co.nz

Contact number * 033100247

Street address
127 Main North Road
Woodend

Mailing address
P O Box 58
Woodend

Trade * Other

Other builder

Registration number

Insert registration number if applicable i.e. plumber or gasfitter registration number.

Other Trades

Name * Spanbild NZ Ltd

Company

Email address * headoffice@spanbild.co.nz

Contact number * 033495700

Street address
112 Waterloo Road
Christchurch

Mailing address
P O Box 11013
Christchurch

Trade * Designer

Other

Registration number

Insert registration number if applicable i.e. plumber or gasfitter registration number.

Other Trades

Name * Ryan Moreau

Company Spanbild NZ Ltd

Email address * headoffice@spanbild.co.nz

Contact number * 033495700

Street address

112 Waterloo Road
Christchurch

Mailing address

P O Box 11013
Christchurch

Trade *

Engineer

Other

Registration number

CPEng 1013731

Insert registration number if applicable i.e. plumber or gasfitter registration number.

What Are The Specifics Of The Site

What is the wind zone *

○ Low	○ Medium	○ High	○ Very High	○ Extra High	◉ Specific Design

Wind zone specific design value

34.22m/s

What is the exposure zone *

◉ Low(B)	○ Medium(C)	○ High/Sea spray(D)

Does the proposed building work cover two or more allotments *

○ Yes	◉ No

Are there public drains on the site *

○ Yes	◉ No

Is the site subject to natural or created hazards such as erosion, subsidence, flooding, slips, cut and fill or contamination *

○ Yes	◉ No

Are there any alterations to land contours (e.g. earthworks) *

○ Yes	◉ No

Are there new or altered connections to public utilities *

○ Yes	◉ No

Are there new or altered locations and/or external dimensions of buildings *

○ Yes	◉ No

Is there new or altered access for vehicles *

○ Yes	◉ No

Is the building work over or adjacent to any road or public place *

○ Yes	◉ No

Does the building work involve the disposal of storm-water or wastewater *

◉ Yes	○ No

Is the building work over any existing drains or sewers or in close proximity to wells or water mains *

○ Yes	◉ No

Are there any other matters known to the applicant that may require authorisation from the territorial authority *

○ Yes	◉ No

What Are The Details Of The Building Work

Provide a full description of the building work *

construction of an IL1 steel framed and steel clad Totalspan building on a concrete slab

Estimated value of the building work (including GST) *

$ 30243.85

Please note: *You may be required to provide supporting documentation for the value of your building work, including but not limited to quotes, contracts and invoices.*

What is the intended life of the building *

◉ 50+ years ○ Limited Life

Proposed Use

You must select at least one of the following seven proposed use 'types'. Where you select Housing, Communal residential or Communal non-residential, you must also specify a proposed use 'sub type'

☐ **Housing**

☐ **Communal residential**

☐ **Communal non-residential**

☐ **Commercial**

☐ **Industrial**

☑ **Outbuildings**

☐ **Ancillary**

Will the building work affect an existing building and/or parts of an existing building *

○ Yes ◉ No

Total number of floor levels *

1

Levels below ground (if applicable)

Total floor area (all levels) *

28 m2

Is the building used for anything other than a single household unit? *

◉ Yes ○ No

If this consent includes any residential units. How many new residential units will be created? *

0

Is the building more than one storey and/or have more than a single use?

○ Yes ◉ No

Total occupancy numbers

0

Does the project include Restricted Building Work *

○ Yes ◉ No

Have you discussed this project with the Building Consent Authority prior to applying?

○ Yes ◉ No

Does the building work involve a swimming pool?

○ Yes ◉ No

Does the building work involve any Recladding?

○ Yes ◉ No

What Clauses Of The Building Code Does Your Work Comply With

NOTE:

- Unless otherwise noted below, your application will be assessed under Acceptable Solutions.
- You are required to indicate what code clause(s) your building work complies with.
- If you are using another means of compliance, please provide details of the standard(s) that your building work complies with and the means of compliance in the space provided.

You can view building related standards on the Standards New Zealand website.

☑ * **I understand that this application is to be assessed against Acceptable Solutions, unless otherwise stated in this section.**

☑ **B - Stability**

☑ **B1 - STRUCTURE**

☑ **B2 - DURABILITY**

Verification Methods	Alternative Solutions	Additional information
B1 - VM1 and VM4 B2 - AS1		
Include relevant code clauses and means of compliance	*Include relevant code clauses and means of compliance or details of any waiver and modifications (including applicable code clauses)*	

☑ **C - Protection from fire**

☑ **C1 - OUTBREAK OF FIRE**

☑ **C2 - PREVENTION OF FIRE OCCURRING**

☑ **C3 - FIRE AFFECTING AREAS BEYOND THE SOURCE**

☑ **C4 - MOVEMENT TO A PLACE OF SAFETY**

☑ **C5 - ACCESS AND SAFETY FOR FIREFIGHTING OPERATIONS**

☑ **C6 - STRUCTURAL STABILITY**

Verification Methods	Alternative Solutions	Additional information
C1 - C6 = all As1		
Include relevant code clauses and means of compliance	*Include relevant code clauses and means of compliance or details of any waiver and modifications (including applicable code clauses)*	

☐ **D - Access**

☑ **E - Moisture**

☑ **E1 - SURFACE WATER**

☑ **E2 - EXTERNAL MOISTURE**

☐ **E3 - INTERNAL MOISTURE**

Verification Methods	Alternative Solutions	Additional information
E1 - AS1	ES2 - Alt sol.	
Include relevant code clauses and means of compliance	*Include relevant code clauses and means of compliance or details of any waiver and modifications (including applicable code clauses)*	

☑ **F - Safety of users**

☑ **F1 - HAZARDOUS AGENTS ON SITE**

☐ **F2 - HAZARDOUS BUILDING MATERIALS**

☐ **F3 - HAZARDOUS SUBSTANCES AND PROCESSES**

☐ **F4 - SAFETY FROM FALLING**

☑ **F5 - CONSTRUCTION AND DEMOLITION HAZARDS**

☐ **F6 - VISIBILITY IN ESCAPE ROUTES**

☐ **F7 - WARNING SYSTEMS**

☐ **F8 - SIGNS**

☐ **F9 - RESTRICTING ACCESS TO RESIDENTIAL POOLS**

Verification Methods	Alternative Solutions	Additional information
F1 - VM1 F5 - AS1		
Include relevant code clauses and means of compliance	*Include relevant code clauses and means of compliance or details of any waiver and modifications (including applicable code clauses)*	

☐ **G - Services and facilities**

☐ **H - Energy efficiency**

☐ **Specific Buildings**

What Specified Systems Are In The Building?

Does your building work involve or affect any Specified Systems (SS)? *

○ Yes ⊙ No

Have You Attached All Required Documentation

Document Upload Process

Only one document can be uploaded against each document category. You need to merge all documents into a single PDF per category (e.g. all architectural plans must be merged into a single document).

Several free online PDF merger tools are available on the internet one such tool is Smallpdf. With Smallpdf, you can merge documents into a single file.

For a full list of the document categories and what should be included in each category click **here.**

Click **here** for help and frequently asked questions.

Document Categories for Residential Applications

The following document categories are associated with a residential application:

- **Architectural Plans**
- **Architectural Specifications**

If you have selected structural requirement/s for the application, the following document categories will also be available.

- **Structural Plans**
- **Structural Specifications**

Do you have structural engineering documents? *

◉ Yes	○ No

☑ * **I have the documentation ready and combined into the appropriate categories**

Do you have any other documents not related to the above categories? *

◉ Yes	○ No

Declaration

Privacy Information

The information you have provided on this form and supporting documentation is required so that your application can be processed under the Building Act 2004 and in accordance with the Building (Forms), Regulations 2004. All information and documents provided as part of your building consent application can be requested by the public under the Building Act 2004, the Official Information Act 1982, and the Local Government Official Information and Meetings Act 1987. Information can be requested by individuals or companies who may use the information for marketing purposes.

In certain circumstances, some information can be withheld from release. Please raise any privacy concerns directly with your Building Consent Authority.

You can view the Simpli Privacy Statement here

In providing this information, you agree to your details being used for customer surveys carried out by the Council, BCA or TA.

Terms of Use

By making this submission you agree to the Simpli portal terms and conditions.

Your application fees

The Council, BCA or TA may charge fees for your application. These will include statutory levies to BRANZ and the Ministry of Business, Innovation & Employment.

A fee schedule can be found on the BCA's website, refer to the link in the details panel on the right. Your fees will be advised when the BCA accepts your submission.

You must not commence the building work until the consent has been issued and uplifted.

☑ * **I acknowledge and agree with the above statements.**

Name *	**Date** *	
Stephanie Carter, Totalspan North Canterbury	15/04/2025	

Submitter Declaration

Submitter Name	Stephanie Carter
Date	15/04/2025

I understand that by ticking the following boxes, I am agreeing to the following statements:

☑ * **As the agent I confirm that I am submitting this application on behalf of and with the authority of the owner and confirm that all the information within the application is, to the best of my knowledge, true and correct.**

☑ * **I request that you issue a building consent for the building work described in this application.**

RECORD OF TITLE
UNDER LAND TRANSFER ACT 2017
FREEHOLD

Search Copy

R.W. Muir
Registrar-General
of Land

Identifier **CB45C/43**
Land Registration District **Canterbury**
Date Issued 17 December 1998

Prior References
CB40D/403

Estate Fee Simple
Area 1260 square metres more or less
Legal Description Lot 6 Deposited Plan 79189
Registered Owners
Donald Melvern Campbell and Alison Teresa Campbell

Interests

A382983.1 Resolution under Section 321(3)(c) Local Government Act 1974 (DP 79189) - 17.12.1998 at 12.20 pm

A382983.6 Easement Certificate specifying the following easements - 17.12.1998 at 12.20 pm

Type	Servient Tenement	Easement Area	Dominant Tenement	Statutory Restriction
Right of way, right to drain sewage and water, right to convey water, electric power and telephonic communications	Lot 5 Deposited Plan 79189 - CT CB45C/42	A DP 79189	Lot 6 Deposited Plan 79189 - herein	
Right of way, right to drain sewage and water, right to convey water, electric power and telephonic communications	Lot 5 Deposited Plan 79189 - CT CB45C/42	B DP 79189	Lot 6 Deposited Plan 79189 - herein	

The above easements will be subject to Section 243(a) Resource Management Act 1991 when created

A382983.7 Transfer creating the following easement in gross - 17.12.1998 at 12.20 pm

Type	Servient Tenement	Easement Area	Grantee	Statutory Restriction
Convey electric power	Lot 6 Deposited Plan 79189 - herein	E DP 79189	Mainpower New Zealand Limited	

The above easement is subject to Section 243(a) Resource Management Act 1991

Land Covenant in Transfer A419959.1 - 12.8.1999 at 11.32 am

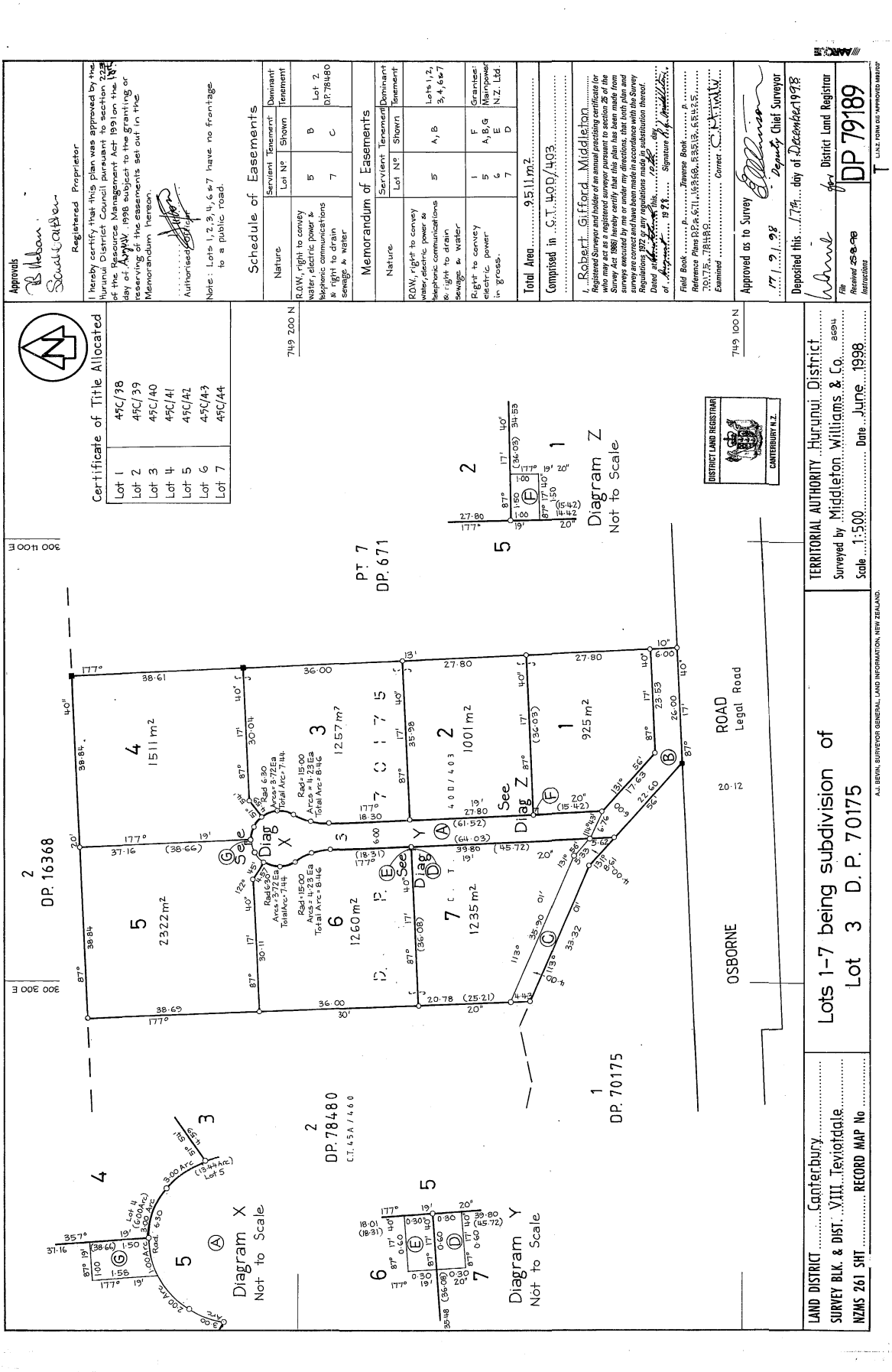
Approvals
Registered Proprietor
Schedule of Easements
Memorandum of Easements
Certificate of Title Allocated
Lot 1 45C/38
Lot 2 45C/39
Lot 3 45C/40
Lot 4 45C/41
Lot 5 45C/42
Lot 6 45C/43
Lot 7 45C/44
Total Area 9511m2
Compiled in C.T. 40D/493
Surveyed by Middleton Williams & Co.
Scale 1:500
Date June 1998
TERRITORIAL AUTHORITY Hurunui District
LAND DISTRICT Canterbury
SURVEY BLK. & DIST. VIII Teviotdale
NZMS 261 SHT RECORD MAP No
Lots 1-7 being subdivision of Lot 3 D. P. 70175
DP 79189
District Land Registrar
Deposited this 17th day of December 1998
Approved as to Survey 17.12.98
Deputy Chief Surveyor
Diagram X Not to Scale
Diagram Y Not to Scale
Diagram Z Not to Scale
PT 7 DP. 671
DP. 16368
DP. 78480
DP. 70175
OSBORNE
ROAD Legal Road
749 200 N
749 100 N
300 400 E
300 300 E
DISTRICT LAND REGISTRAR
CANTERBURY N.Z.

HURUN200525 - Request For More Information

HURUNUI DISTRICT COUNCIL
P.O. Box 13 | Amberley | 7441 | 66 Carters Road | Amberley | 7410
Phone 03 314-0006 | Fax 03 314-9181 | Email info@hurunui.govt.nz
Web hurunui.govt.nz | facebook.com/HurunuiDistrictCouncil
Skype hdc_customer_services | twitter.com/hurunuidc

Agent Nomination

I Don Campbell
(Name of owner)

Being the owner of 7 Swindon Lane, Amberley
(Property address)

Hereby give consent for Totalspan North Canterbury
(Name of agent)

To act as my agent for this building project.

Signed x 

Date x 11-4-25 X

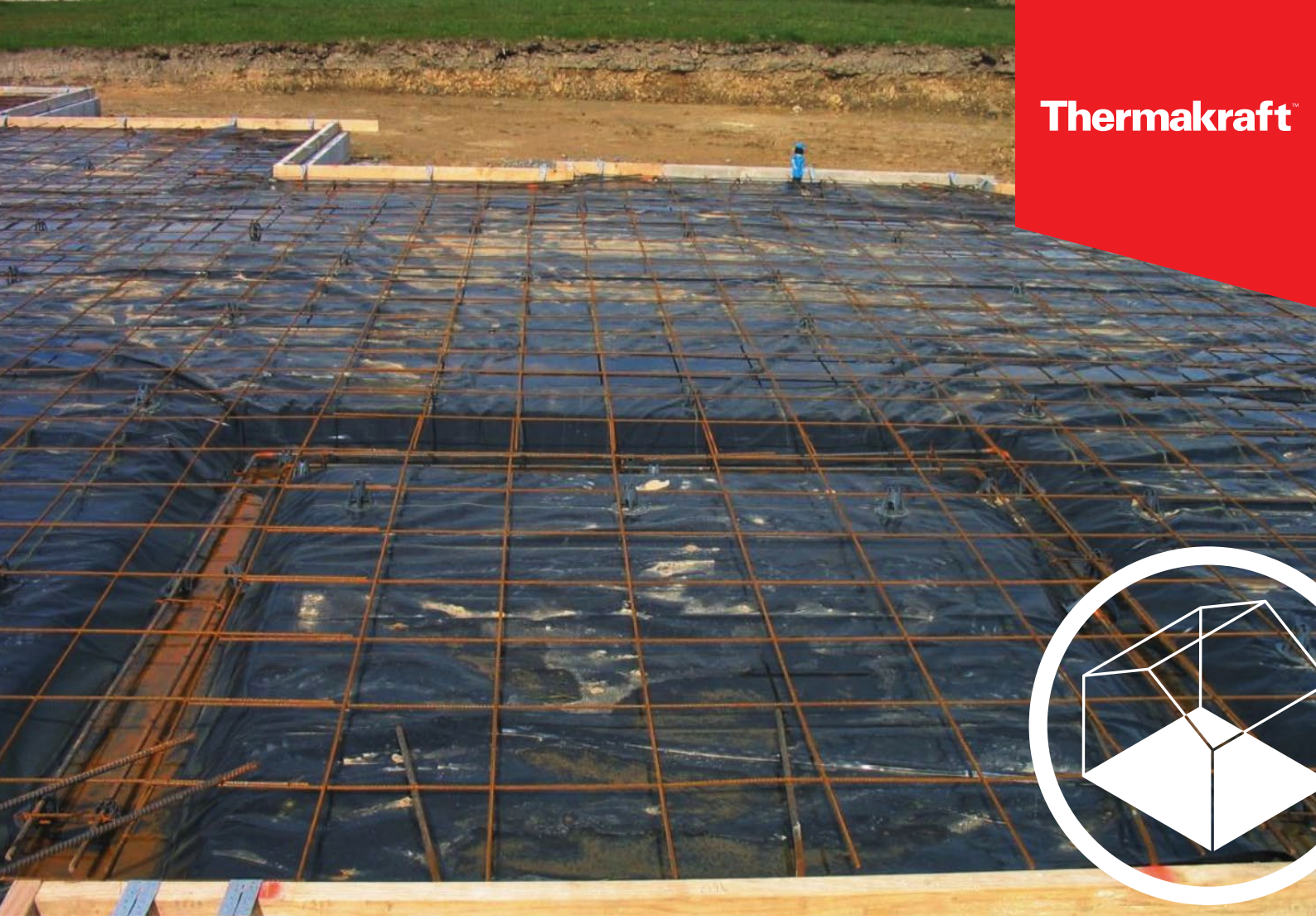

Thermakraft™

Product Data Sheet

THERMATHENE BLACK

Damp Proof Membrane (DPM)

Thermathene Black is a concrete underlay that is made from a tear and puncture resistant polyethylene film. It is commonly known as a Damp Proof Membrane (DPM).

Thermathene Black comes in two roll sizes:

Product Code	Width	Length	Coverage
PF250025	4000mm	25m	100m^2 coverage
PF250050	4000mm	50m	200m^2 coverage

Smarter products. Better buildings.
thermakraft.co.nz

Thermathene Black

Damp Proof Membrane (DPM)

Scope of Use

Thermathene Black intended for use as a damp-proof membrane separating concrete slab from ground soil. The product acts as a vapour barrier to stop ground moisture penetrating the concrete. Thermathene Black must be sealed with Thermakraft White General Purpose tape at the laps joints to form a complete vapour barrier.

General

- Unaffected by LOSP treated timber. However, LOSP treated timber must have sufficient time for the solvent chemical to flash off in well ventilated area. Recommended minimum 7 days.
- 4m x 25m [100m2] and 4m x 50m [200m^2] unfolded size.
- 250 Micron in thickness.

Limitations

- Maximum weather or UV exposure is 28 days.
- Cannot be used as a roof or wall underlay.

Compliance

Thermathene Black is an acceptable solution as per the requirements of the NZBC. Thermathene Black meets the requirements of NZBC 3604:2011 Clause 7.5.4.2, NZBC Acceptable Solutions E2/AS1, Table 23 and NZS 4229:2013 Clause 7.4 & 7.6.

When Thermathene Black is used and installed as a damp-proof membrane as per Thermakraft's literature, the product will meet or contribute to meeting the following provisions of the NZBC: Clause B2 Durability: Performance B2.3.1 (a), 50 years, Clause E2 External Moisture: Performance E2.3.3 & Clause F2 Hazardous Materials: Performance F2.3.1.

Product Warranty

Standard Thermakraft warranty applies. Refer to Thermakraft Warranty Statement for further details. This is available online at **thermakraft.co.nz** or call **0800 806 595.**

Thermakraft Limited / 0800 806 595

Smarter products. Better buildings.

thermakraft.co.nz

The recommendations contained in Thermakraft's literature are based on good building practice, but are not an exhaustive statement of all relevant information and are subject to any conditions contained in the Warranty. All product dimensions and performance claims are subject to any variation caused by normal manufacturing process and tolerances. Furthermore, as the successful performance of the relevant system depends on numerous factors outside the control of Thermakraft (for example quality of workmanship and design), Thermakraft shall not be liable for the recommendations in that literature and the performance of the Product, including its suitability for any purpose or ability to satisfy the relevant provisions of the Building Code, regulations and standards. Literature subject to change without notification. Latest documentation can be found on the website. E&OE.

Issue 4, November 2019

Thermakraft™



Installation Guide

THERMATHENE BLACK

Damp Proof Membrane (DPM)

Thermathene Black is a concrete underlay that is made from a tear and puncture resistant polyethylene film. It is commonly known as a Damp Proof Membrane (DPM).

Product usage

Thermathene Black is used as a concrete underlay and a moisture vapour barrier in areas where protection is required. The product is 250 microns in thickness and is coloured black. Thermathene Black may also be used under suspended subfloors as ground protection from rising damp.

Smarter products. Better buildings.
thermakraft.co.nz

Installation Guide

Application Method

- Thermathene Black should be installed in accordance with the requirements of NZS3604:2011 and must be laid on a properly prepared base as required by NZS3604:2011 Section 7.5.3 to 7.5.6.2.
- Thermathene Black must be laid in a continuous manner with all laps minimum 150mm, and penetrations to be taped with Thermakraft White General Purpose Tape.
- Thermathene Black should be laid in a neat fashion with a smooth surface, with as many of the ripples as possible eliminated.
- Thermathene Black must be inspected for any damage (tears or pentrations) prior to concrete placement. Any damage must be repaired with Thermakraft White General Purpose Tape, for any larger damage a patch of Thermathene Black maintaining a 150mm lap.
- Thermathene Black must not be left exposed for more than 28 days.
- Thermathene must be installed by a licensed building practitioner.
- Thermathene Black may also be used to cover ground areas under suspended timber floors to prevent the rise of dampness. Ensure that the site is clear of rubbish, sharp edges such as rocks or bricks. Slit and patch around jack studs or pipe work. All penetrations and joints must be taped.

Handling and Storage

Thermathene Black must be handled with care to prevent damage, the product must be stored under cover well away from direct moisture, rainfall contact and sunlight (UV). Care should be taken not stack other materials on top of the product.

Thermakraft Limited / 0800 806 595

The recommendations contained in Thermakraft's literature are based on good building practice, but are not an exhaustive statement of all relevant information and are subject to any conditions contained in the Warranty. All product dimensions and performance claims are subject to any variation caused by normal manufacturing process and tolerances. Furthermore, as the successful performance of the relevant system depends on numerous factors outside the control of Thermakraft (for example quality of workmanship and design), Thermakraft shall not be liable for the recommendations in that literature and the performance of the Product, including its suitability for any purpose or ability to satisfy the relevant provisions of the Building Code, regulations and standards. Literature subject to change without notification. Latest documentation can be found on the website. E&OE.

Issue 1, November 2019



Thermakraft™

Product Data Sheet

COVERTEK 405

Self-supporting roof and wall underlay

Covertek 405 is a premium synthetic roof and wall underlay designed as a means of managing condensation, water vapour transfer and water ingress. It is self-supporting, stable and shrink resistant and can be installed in applications where the roof pitch is 3° and above.

Covertek 405 comes in three roll sizes:

1250mm wide	20m long	25m² Coverage[2]
1250mm wide	40m long	50m² Coverage[2]
2550mm wide[1]	29.4m long	75m² Coverage[2]

Cut to Length available – Contact your Thermakraft Representative.

1 **Note:** made to order.
2 **Note:** m² is the roll size for actual coverage, allow for laps and joins.

Smarter products. Better buildings.
thermakraft.co.nz

CodeMark GM-CM30030

BRANZ Appraised
Appraisal No.743 [2019]

Covertek 405

Self-supporting roof and wall underlay

Scope of Use

Roof Application

- Suitable with masonry tile, metal tile and profiled metal roof cladding.
- Suitable for timber or steel framed buildings.
- Can be used on roofs up to and including NZS 3604 'Extra High' wind zones.
- Self-supporting - Refer to installation guide regarding underlay support requirements.
- Not suitable for roof pitch less than 3 degrees.
- Will provide temporary weather protection during construction (maximum 7 days), same day coverage recommended.

Wall Application

- Can be used with timber and steel framing, either direct or in conjunction with an 18mm minimum drained cavity.
- Suitable with absorbent (e.g. timber, brick or fibre cement) or non-absorbent wall claddings (e.g. metal or plastic).
- Suitable with masonry veneer in accordance with NZBC Acceptable Solution E2/AS1 or NASH Building Envelope Solutions.
- Is suitable for use in Wind Zones of NZS 3604 up to and including 'Very High' when used as a standalone flexible underlay, and 'Extra High' when used as a flexible underlay over a rigid wall underlay.
- Is suitable as an air barrier in unlined wall spaces.
- Will provide some temporary weather protection during construction (maximum 60 days for wall application).

General

- Is fire retardant.
- Unaffected by LOSP or other solvent based treated timber. However, LOSP or other solvent based treated timber must have sufficient time for the solvent chemical to flash off in a well ventilated area. Recommended minimum 7 days.
- Tear resistant and strong.

Limitations

- Must NOT be exposed to the weather or UV for more than 7 days as a roof underlay and 60 days as a wall underlay.
- Must not be used under translucent sheeting.

Compliance

Roof Application

- Can be used as an underlay within the scope limitations of NZBC Acceptable Solution E2/AS1, Paragraph 1.1, with regards to building height and floor plan area.
- Or within the scope limitations of NASH Building Envelope Solutions, Paragraph 1.1 for steel framed buildings.
- Refer BRANZ Appraisal No 743 (2019) and CodeMark Certificate GM-CM30030 for full details.
- CodeMark Certification only covers roof application.

Wall Application

- Can be used as a wall underlay within the scope limitations of NZBC Acceptable Solution E2/AS1, Paragraph 1.1, with regards to building height andvfloor plan area.
- Or within the scope limitations of NASH Building Envelope Solutions, Paragraph 1.1 for steel framed buildings.
- Refer to BRANZ Appraisal No 743 (2019) for full details.

Flammability Index

Thermakraft Covertek 405 Underlay has an AS 1530 Part 2 Flammability Index of not greater than 5 and therefore meets the requirements of NZBC Acceptable Solutions C/AS2 to C/AS6, Paragraph 4.17.8 b), for the surface finish requirements of suspended flexible fabric used as an underlay to exterior cladding that is exposed to view in occupied spaces.

Durability

Meets the Performance Requirements of NZBC Clauses B2, Durability (B2.3.1 (a) 50 years, B2.3.1 (b) 15 years and B2.3.2), C3 Fire affecting areas beyond the fire source C3.4 (c) E2 External Moisture, and F2 Hazardous Building Materials F2.3.1/C, providing:

- It is not damaged.
- Is installed in accordance with instructions.
- Is not left exposed for more than 7 days (roof), same day coverage recommended.
- Is not left exposed for more than 60 days (wall)
- Is installed by or under guidance of Licensed Building Practitioners.
- Is compatible with cladding system used.*

* **Note:** specifiers and product users must test for roof cladding system compatibility with the underlay before installation.

Covertek 405

Self-supporting roof and wall underlay

Control of Condensation

In climatic regions where condensation risks are high, such as cold or high humidity areas, care needs to be taken in specifying the correct design and installation to prevent moisture build-up in the roof cavities.

Factors which adversely affect the condensation risk in roofing systems include:

- Humid, and/or cold climatic regions.
- Warm/Skillion roof construction.
- Low roof cavity air volume and restricted air movement.
- Omitting Vapour Control Layers.
- Occupancy activities which have high moisture loading on conditioned spaces.
- Ceiling penetrations and entry of warm air into roof cavities.
- Low pitched roof.
- Bulk insulation.
- Building structures ability to naturally dry construction moisture.

Skillion and Warm Roof Construction are particularly sensitive to moisture accumulation and the design and installation of roof construction needs to take into account the higher condensation risks. Refer to the NZ Metal Roof and Wall Cladding Code of Practice (COP) for details.

For passive ventilation of the roof space, it is recommended that all roof underlays are terminated at the ridge, and if not it should be slit or slotted to allow for passive ventilation. For further information refer to the NZ Metal Roof and Wall Cladding COP.

Property Performance

NZBC E2/AS1 Table 23 (NZS2295) Wall Underlay Properties	Absorbency	Vapour Resistance	pH of Extract	Shrinkage	Water Resistance	Air Resistance
Property Performance Requirement	≥ 150gsm	≤ 0.5 MN.s/g	≥ 5.5 and ≤ 8	≤ 0.5%	≥ 100mm	≥ 0.1 MN.s/m3
Property Performance	Pass	Pass	Pass	Pass	Pass	Pass*

* **Note:** Can be used as an air barrier.

Product Warranty

Standard Thermakraft warranty applies. Refer to Thermakraft Warranty Statement for further details. This is available online at **thermakraft.co.nz** or call **0800 806 595.**

Thermakraft Limited / 0800 806 595

Smarter products. Better buildings.

thermakraft.co.nz

CodeMark GM-CM30030

BRANZ Appraised
Appraisal No.743 [2019]

The recommendations contained in Thermakraft's literature are based on good building practice, but are not an exhaustive statement of all relevant information and are subject to any conditions contained in the Warranty. All product dimensions and performance claims are subject to any variation caused by normal manufacturing process and tolerances. Furthermore, as the successful performance of the relevant system depends on numerous factors outside the control of Thermakraft (for example quality of workmanship and design), Thermakraft shall not be liable for the recommendations in that literature and the performance of the Product, including its suitability for any purpose or ability to satisfy the relevant provisions of the Building Code, regulations and standards. Literature subject to change without notification. Latest documentation can be found on the website. E&OE.

Issue 5, September 2020

Roof Safe Mesh Galvanised Steel

Product Technical Statement

SUMMARY OF FEATURES

- A welded galvanised steel wire mesh used as a support for roofing underlays and insulation. It also provides a safety net against falls during initial roof installation and for ongoing maintenance work.
- Suitable for both timber and steel structures.
- Complies with Safety Mesh Standard AS/NZS 4389: 2015.

TECHNICAL INFORMATION

Product Description

Kiwimesh Roof Safe Mesh consists of a welded, mild steel wire mesh with longitudinal wires spaced at 150mm centres and cross wires spaced at 300mm centres.

It is comprised of a 2.0mm diameter galvanised wire with a tensile strength exceeding 450mpa. T

Applications

- Provides fall-through protection during roof installation and ongoing maintenance.
- Suitable for use on timber and steel framing.

Technical Data

Complies with Safety Mesh Standard AS/NZS 4389: 2015:

Limitations

Not to be used for access or as a working platform.

Handling & Storage

Rolls must be stored on end, under cover and protected from moisture. Do not double stack or use to support other materials. Rolls must not be stored on concrete floors for long periods.

Size Range Available

Fixing instructions

Before installation check with the local code of practice for safe work on roofs.

Transverse wires shall be on top of the longitudinal wires.

All longitudinal wires are passed around anchor points with the tail of each wire being twisted four times around the main portion of the same wire.

End joints in wire, two transverse wires are placed together, the longitudinal tail wires (approx 300mm long) are tied around each other, one being twisted four times around the main portion of the same wire, the other longitudinal wire twisted once around the main portion of the same wire then four times around two transverse wires.

Side laps (i) For purlin spacing/span less than 1200mm, the runs of mesh shall be side-lapped by a minimum of one mesh spacing (150mm). (ii) For purlin spacing/span between 1200-2200mm, the runs of mesh shall be side-lapped by a minimum of one mesh spacing (150mm). Side laps shall be secured with ring fasteners fabricated from minimum 1.90mm diameter wire, or equivalent, fitted at maximum 900mm centres between each purlin on one side of the lap. (iii) For purlin spacing/span greater than 2200mm, the runs of mesh shall be side-lapped by a minimum of two mesh spacing (300mm). Side laps shall be secured with ring fasteners fabricated from minimum 1.90mm diameter wire, or equivalent, fitted at maximum 600mm centres between purlin/span on both sides of the lap.

Tautness. Mesh shall be pulled taut to ensure only natural sag between each purlin or roof member.

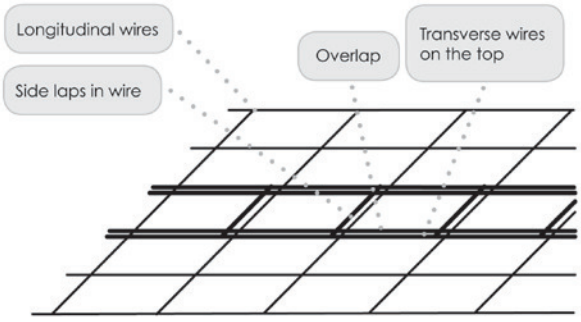

End joints

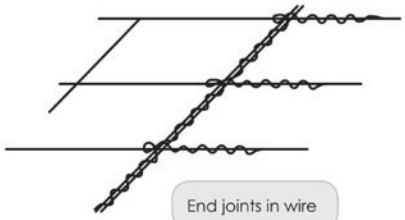

End joints in wire

Steel and timber purlins

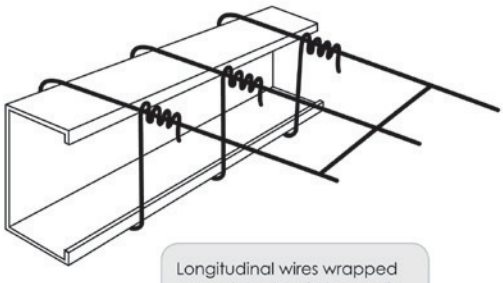

Longitudinal wires wrapped around steel or timber purlin.

Steel purlins

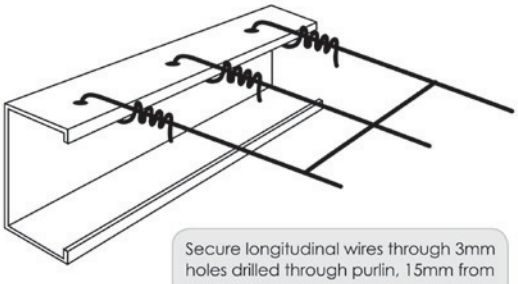

Secure longitudinal wires through 3mm holes drilled through purlin, 15mm from the edge.

Timber purlins

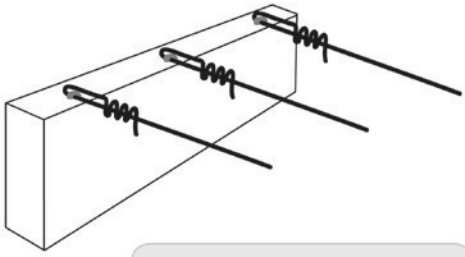

Secure longitudinal wire in position with 40mm long x 3.15mm diameter staples.

KIWIMESH

PAUL Industries

Wall Sheeting

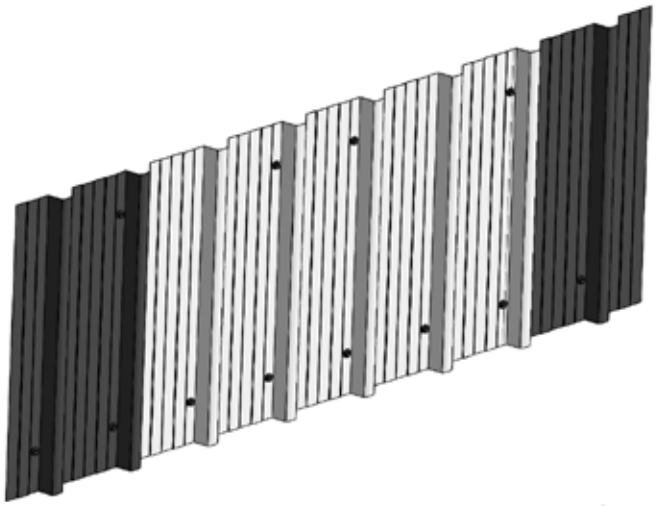

WS1

6 Rib

The cladding for wall sheeting shall be fixed with Cladding Hex Tek #10x16 with neo washers to all walls. On middle girts tek beside every join then miss one, place two. On bottom / top girts tek every pan.

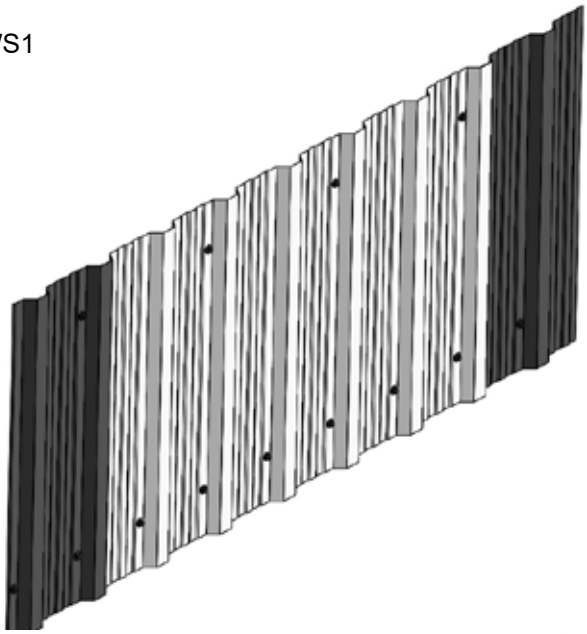

WS2

7 Rib

The cladding for wall sheeting shall be fixed with Cladding Hex Tek #10x16 with neo washers to all walls. On middle girts tek beside every second rib. On bottom / top girts tek every pan.

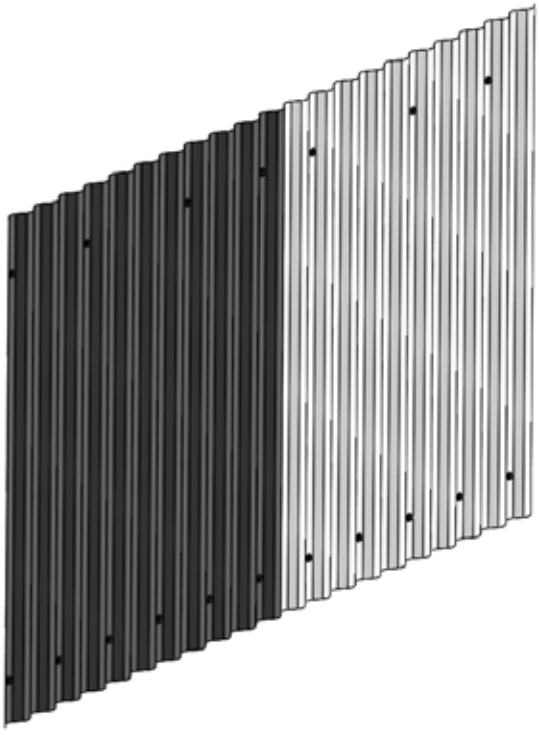

WS3

Corrugate

The cladding for wall sheeting shall be fixed with Cladding Hex Tek #10x16 with neo washers to all walls. On middle girts tek beside every join then miss two, tek one, miss three, tek one. On bottom / top girts tek every second pan.

Roof Sheeting

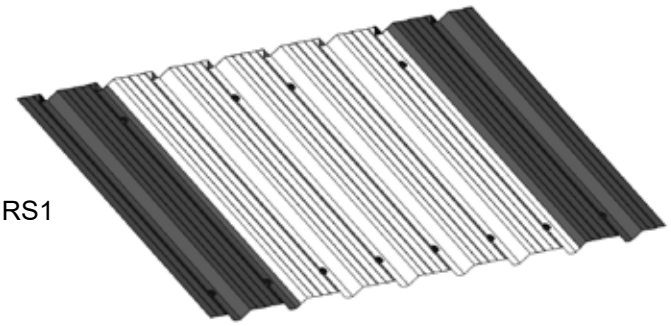

RS1

6 Rib

The cladding for roof sheeting shall be fixed using Cladding Hex Tek #12x45 to all purlins, except the ridge purlin, and extend 50mm into the gutter.

On middle purlins tek rib on every join then miss one, place two. On gutter purlin tek every rib.

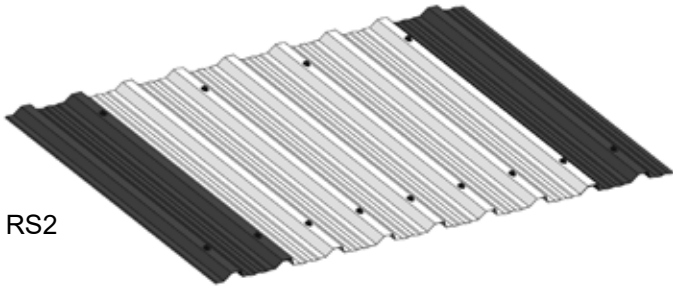

RS2

7 Rib

The cladding for roof sheeting shall be fixed with Cladding Hex Tek #12x35 to all purlins, except the ridge purlin, and extend 50mm into the gutter.

On middle purlins tek every second rib. On gutter purlins tek every rib.

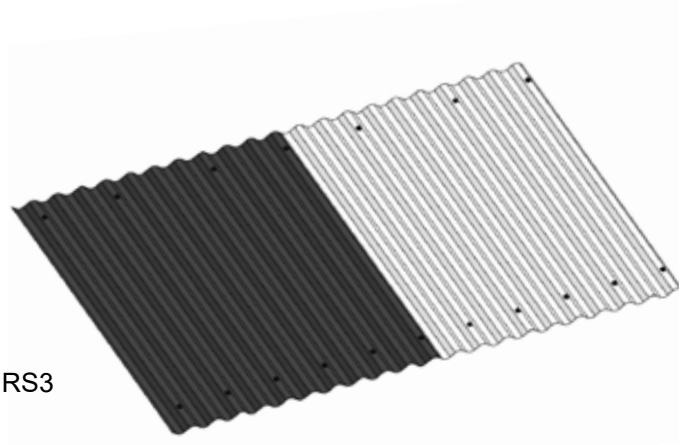

RS3

Corrugate

The cladding for roof sheeting shall be fixed with Cladding Hex Tek #12x35 to all purlins, except the ridge purlin, and extend 50mm into the gutter.

On middle purlins tek on rib at every join then miss two, tek one, miss three, tek one. On gutter purlins tek every second rib.

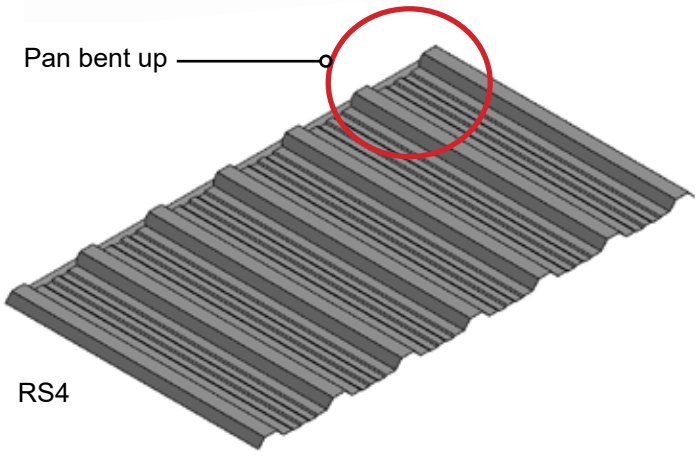

RS4

Pan Detail to Ridge

Roof Sheeting to have pans bent up, as shown, to ridge end. Use a crescent if no suitable bending tool is available.

Translucent Sheet Fixing Details

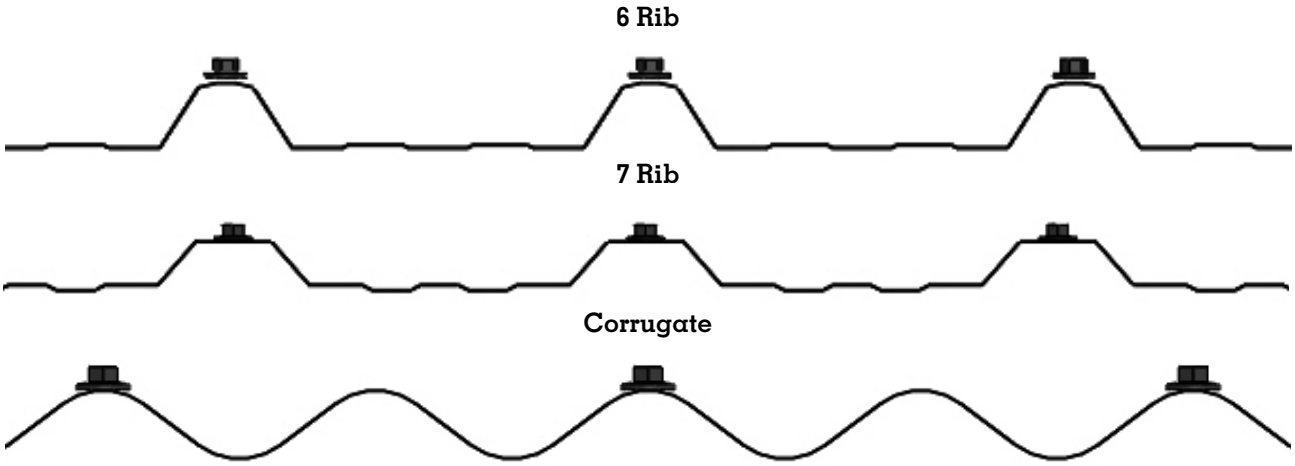

Where wire safety mesh is incorporated under the translucent roof sheeting and where the safety mesh passes over the supporting purlin directly under the fiberglass sheeting, a Protective Purlin Strip (flat fiberglass strip of minimum 1.1mm thickness) must be installed between the translucent sheeting and the safety mesh.

Inseal foam infill to be installed on top of the translucent sheet at the ridge top and ridge fastened over this to provide additional weather sealing.

Site Laps

Each individual translucent sheet is manufactured to overlap and be supported by the adjacent roof or wall cladding sheet.

Fastening Procedure

- In roofing applications, fixings shall be installed through the crest of any profile. Due to the larger expansion and contraction rates of translucent sheeting, oversized fixing holes must be predrilled. Installers must ensure that the fastener is located in the centre of the oversize hole or the benefit of the larger hole is lost. The recommended calculation to ensure the correct hole size used is - 0.75mm per lineal metre, plus the shank size of the fastener. This should be: 7.84 (sheet length) x 0.75=5.88 + 4.5mm (shank size of translucent tek) = 10.38mm 10.5mm holes to be drilled for a 15m span building
- Install screws into translucent sheet in the same manner as metal
- When completed, remove fixings from translucent sheet.
- Using the existing screw hole as a guide, re-drill over sizing the hole
- Re-install the fixing screw. (Note how the screw is centrally located in the hole.)
- It is important not to over tighten the screw putting undue pressure on the translucent sheet. Use only enough pressure that that the translucent fixing screw seal is contoured to the shape of the rib but the rib retains its shape without any sign of buckling.

Note – Top washer is too tight, bottom washer is ok.





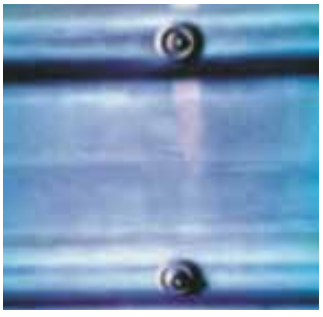

Translucent Sheet Fixing Details contd.

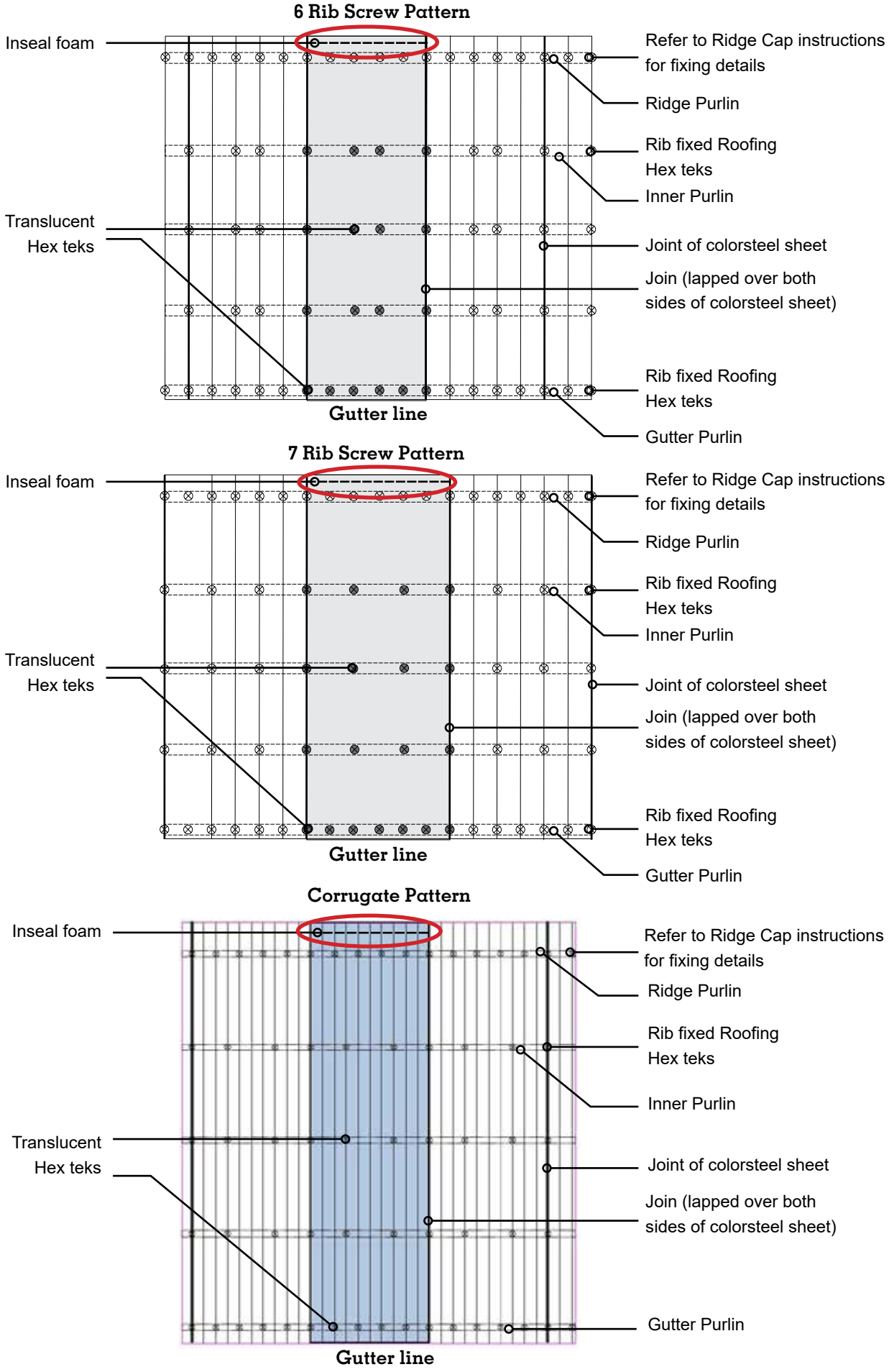

11-4-2025

Hurunui District Council
P O Box 13
Amberley 7441

To Whom It May Concern

RE: TOTALSPAN BUILDING PROJECT IL1

I , Don Campbell, of 7 Swindon Lane, Amberley, acknowledge and agree that my slab will have a finished floor level of 100mm. This level is taken from the highest point of the cleared building site. It has been explained to me what the Council recommendation is (100mm minimum)

Signed: X 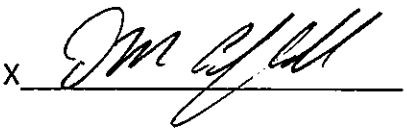 X

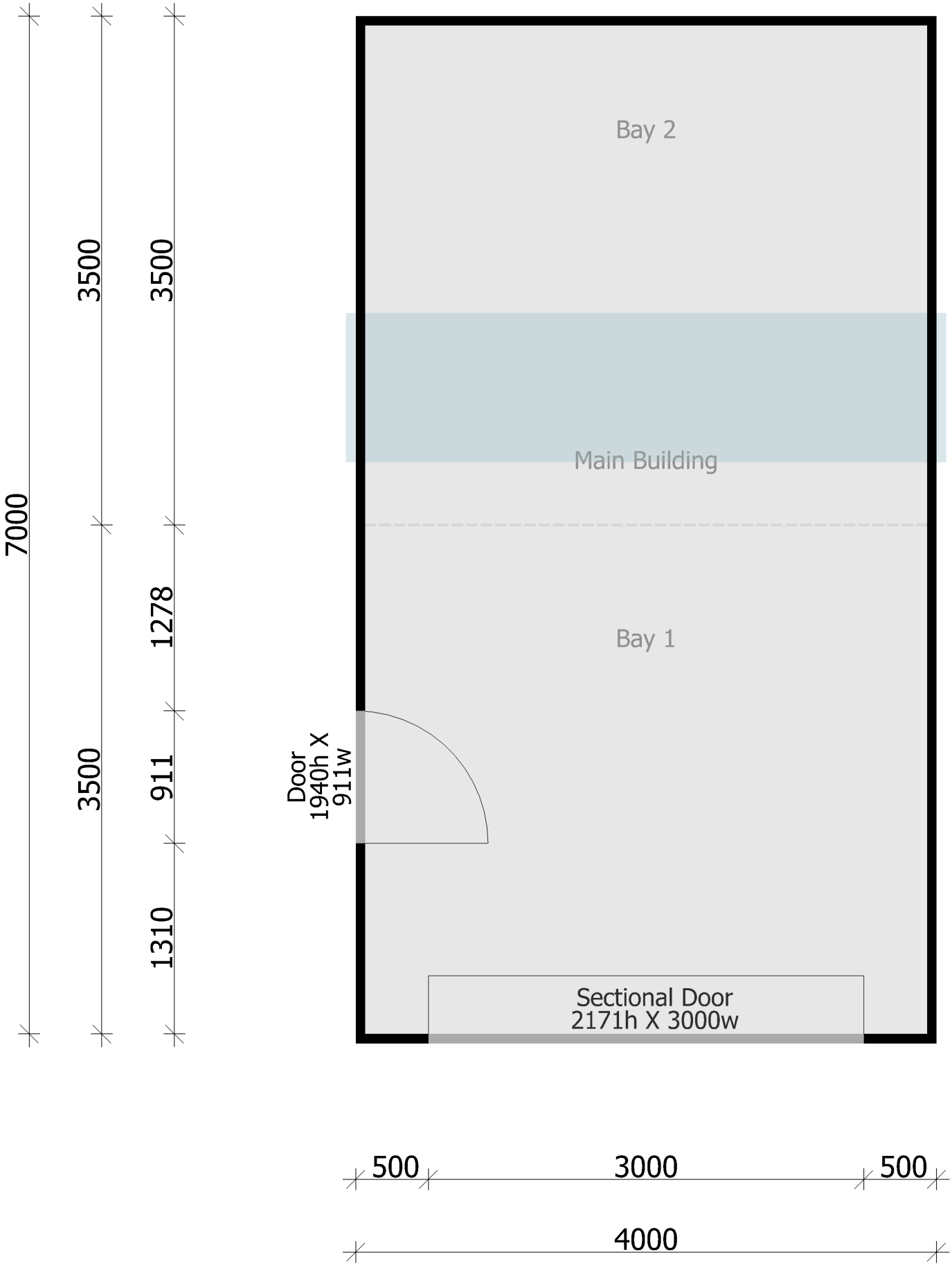

* All Dimensions in mm. Colours shown are examples only. For exact colour samples see your local Totalspan North Canterbury representative.
'NOTE' Drawings are not construction issue. Shop drawings (For Construction) will be detailed prior to fabrication.

Petersen Construction Ltd
127 Main North Road, , Woodend, 7641, New Zealand
Phone: 033100247
Email: northcanterbury@totalspan.co.nz

For:
Don Campbell
7 Swindon Lane

Amberley,
7410

Gable Range
Project Number: JH.309

11 Apr 2025

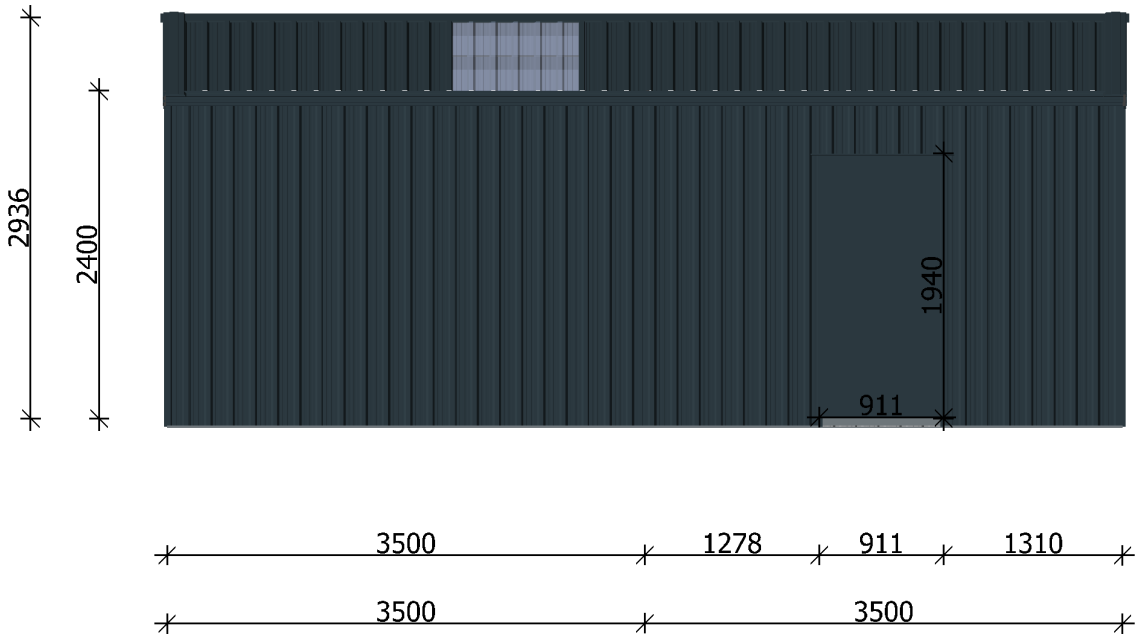

* All Dimensions in mm. Colours shown are examples only. For exact colour samples see your local Totalspan North Canterbury representative.

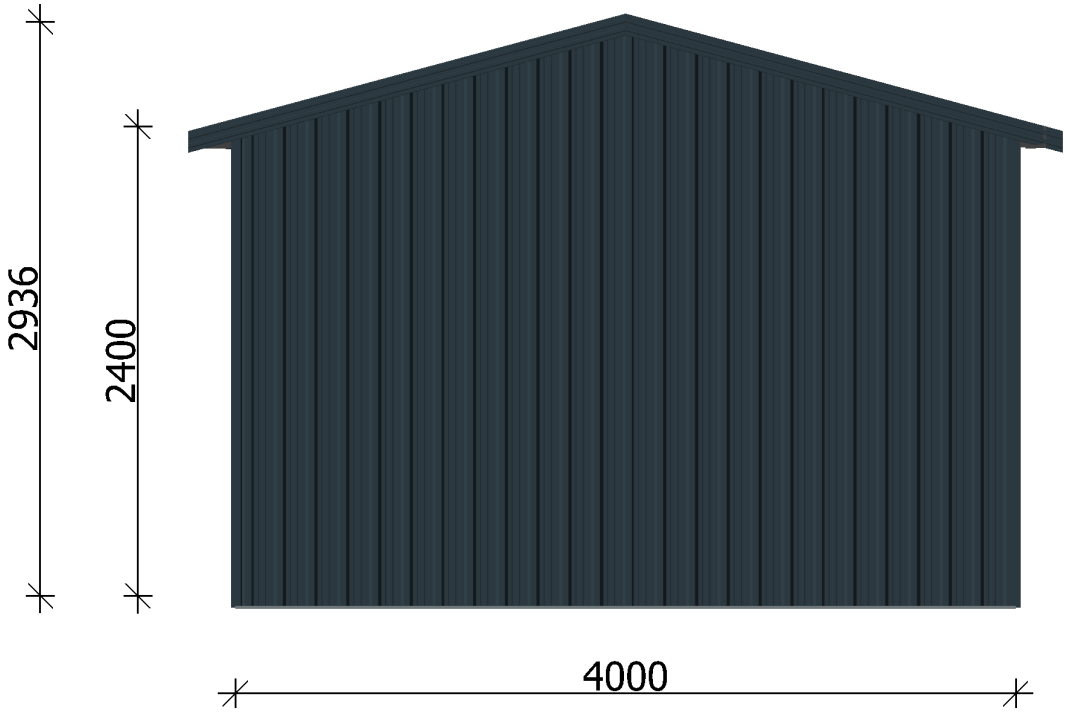

* All Dimensions in mm. Colours shown are examples only. For exact colour samples see your local Totalspan North Canterbury representative.
'NOTE' Drawings are not construction issue. Shop drawings (For Construction) will be detailed prior to fabrication.

Petersen Construction Ltd
127 Main North Road, , Woodend, 7641, New Zealand
Phone: 033100247
Email: northcanterbury@totalspan.co.nz

For:
Don Campbell
7 Swindon Lane

Amberley,
7410

Gable Range
Project Number: JH.309

11 Apr 2025

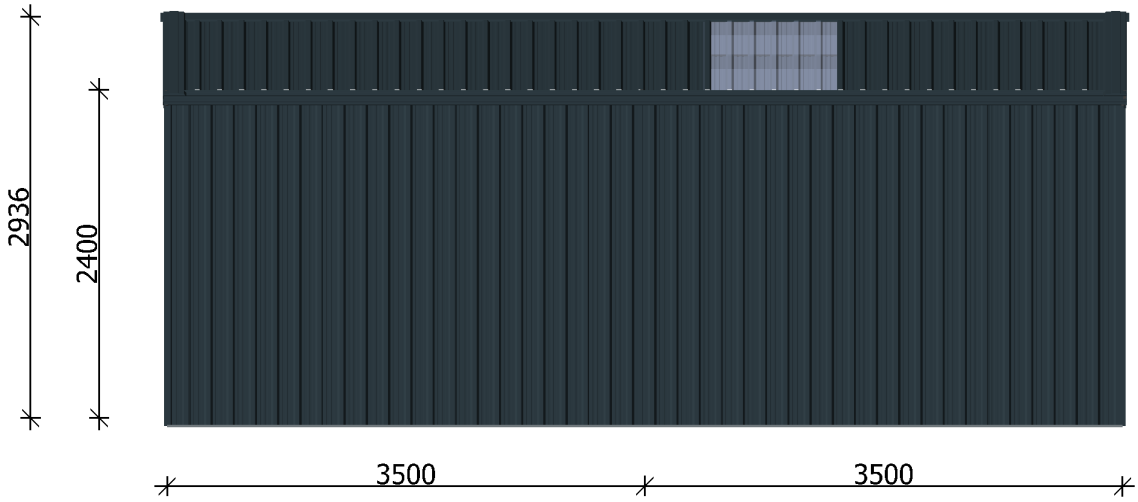

* All Dimensions in mm. Colours shown are examples only. For exact colour samples see your local Totalspan North Canterbury representative.

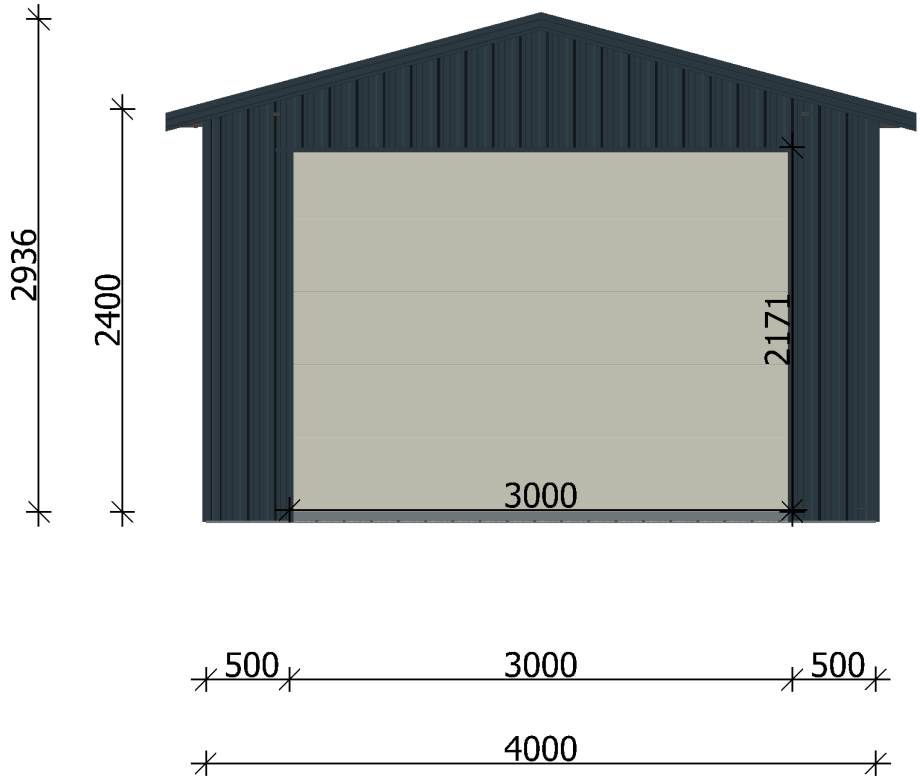

* All Dimensions in mm. Colours shown are examples only. For exact colour samples see your local Totalspan North Canterbury representative.
'NOTE' Drawings are not construction issue. Shop drawings (For Construction) will be detailed prior to fabrication.

Petersen Construction Ltd
127 Main North Road, , Woodend, 7641, New Zealand
Phone: 033100247
Email: northcanterbury@totalspan.co.nz

For:
Don Campbell
7 Swindon Lane

Amberley,
7410

Gable Range
Project Number: JH.309

11 Apr 2025

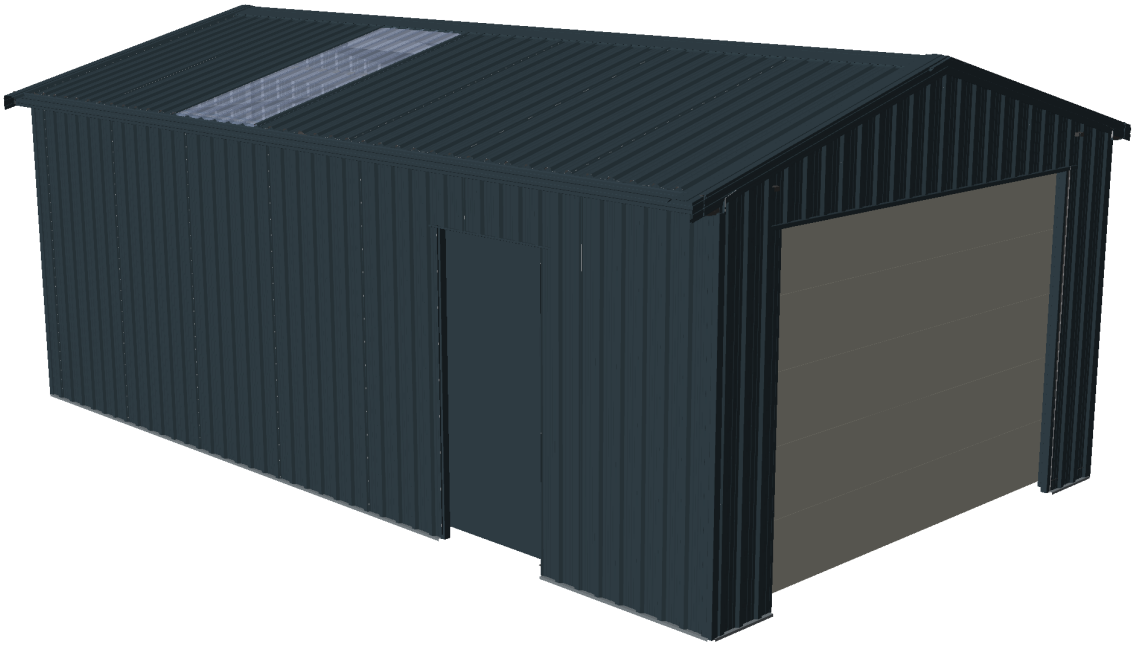

* All Dimensions in mm. Colours shown are examples only. For exact colour samples see your local Totalspan North Canterbury representative.

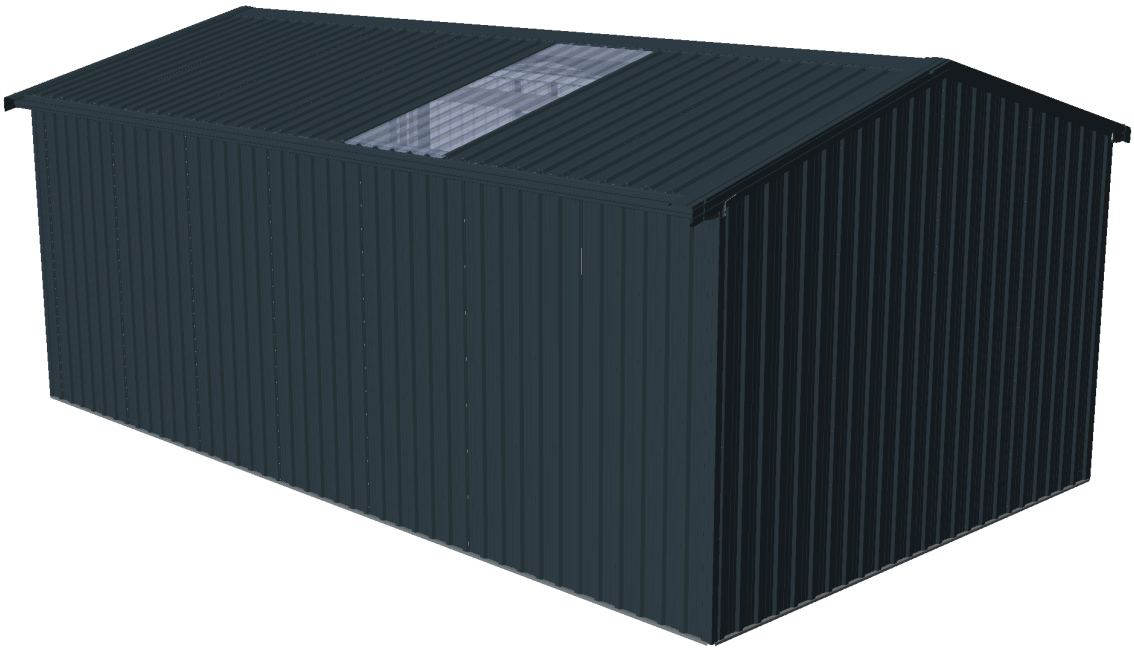

* All Dimensions in mm. Colours shown are examples only. For exact colour samples see your local Totalspan North Canterbury representative.
'NOTE' Drawings are not construction issue. Shop drawings (For Construction) will be detailed prior to fabrication.

Petersen Construction Ltd
127 Main North Road, , Woodend, 7641, New Zealand
Phone: 033100247
Email: northcanterbury@totalspan.co.nz

For:
Don Campbell
7 Swindon Lane

Amberley,
7410

Gable Range
Project Number: JH.309

11 Apr 2025

Canterbury Maps

Information has been derived from various organisations, including Environment Canterbury and the Canterbury Maps partners. Boundary information is derived under licence from LINZ Digital Cadastral Database (Crown Copyright Reserved). Environment Canterbury and the Canterbury Maps partners do not give and expressly disclaim any warranty as to the accuracy or completeness of the information or its fitness for any purpose.

Information from this map may not be used for the purposes of any legal disputes. The user should independently verify the accuracy of any information before taking any action in reliance upon it.

N

0 0 0 0 0 Kilometres

Scale: 1:100 @A3

Map Created by Canterbury Maps on 15/04/2025 at 1:55 PM

7 Swndon Lane
Amberley

9

7

1200

Front

7 x 4 garage

Storm water to soak pit via 2 x 80mm downpipes to 100mm uPVC pipe

Soak pit details and calcs by NC Drainage

1200

1200

Environment Canterbury, Waimakariri DC, LINZ, Environment Canterbury

Canterbury Maps

Information has been derived from various organisations, including Environment Canterbury and the Canterbury Maps partners. Boundary information is derived under licence from LINZ Digital Cadastral Database (Crown Copyright Reserved). Environment Canterbury and the Canterbury Maps partners do not give and expressly disclaim any warranty as to the accuracy or completeness of the information or its fitness for any purpose.

Information from this map may not be used for the purposes of any legal disputes. The user should independently verify the accuracy of any information before taking any action in reliance upon it.

N

0 0 0 0 0 Kilometres

Scale: 1:300 @A3

Map Created by Canterbury Maps on 15/04/2025 at 1:58 PM



Notes,

1. FFL to be a minimum of 100mm above highest point of cleared ground.

2. Saw cuts in red.

3. Refer to engineers PS1 for all slab construction details.

CONTRACTOR TO VARIFY ALL DIMENSIONS PRIOR TO STARTING. ALL DIMENSIONS MM UNLESS STATED.

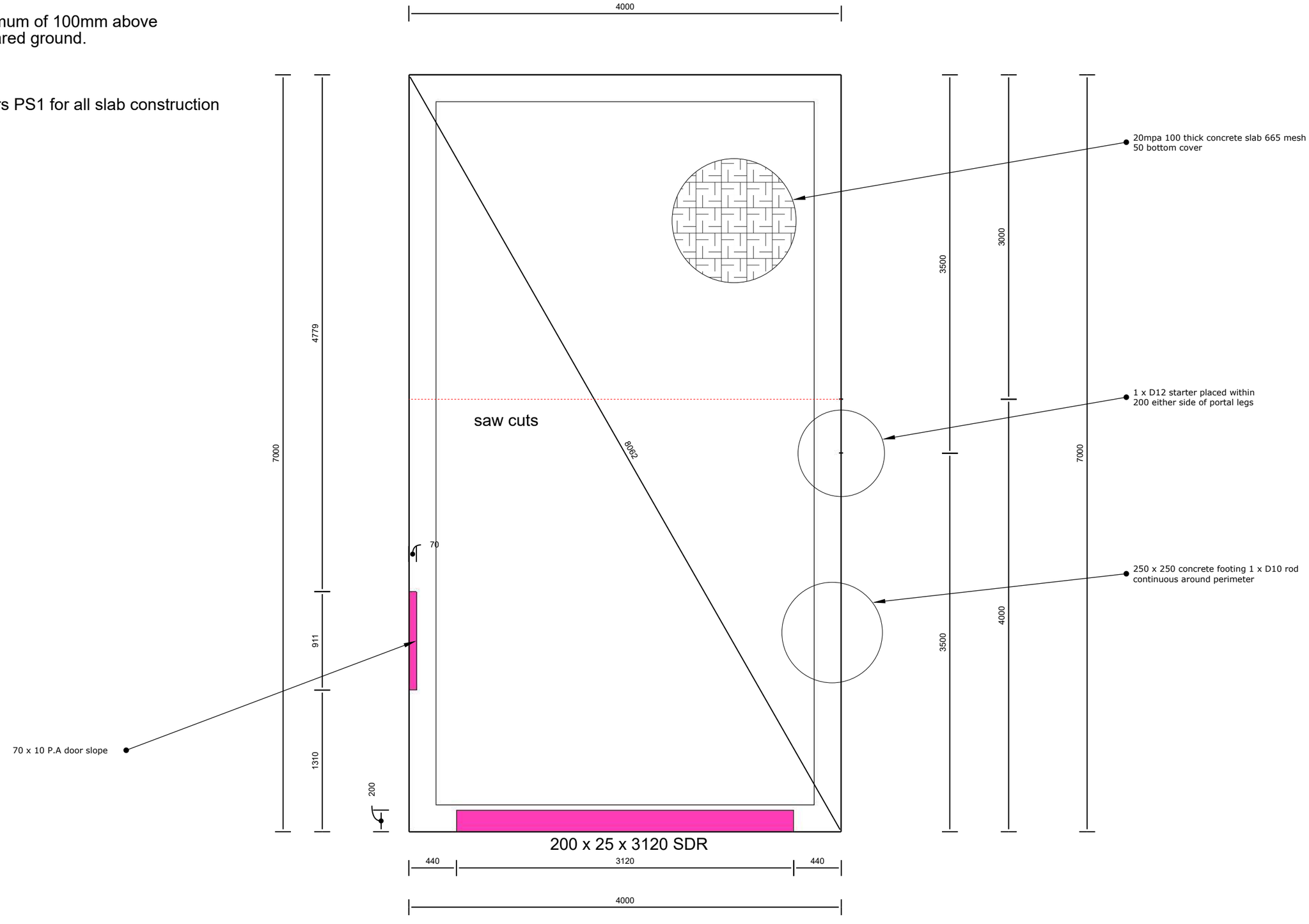

TOTALSPAN
STEEL BUILDINGS
WHO CAN? TOTALSPAN!

BUILDING PROPOSED FOR:

Don Campbell
7 Swindon Lane
Amberley, 7410

DRAWING TITLE:

Slab Plan

DRAWN: JWP

SCALE: NTS

DATE: 15/4/2025

Sediment Control Management Plan

Date: 15/4/2025

Client: Cameron Project

Address: 7 Swindon Lane, Amberley

This erosion and sediment control plan has been prepared in accordance with Environment Canterbury's Builders Pocket Guide (BPG) and Erosion and Sediment Control Guidelines (2007). For more information and guidance on good practice requirements please refer the Builders Pocket Guide website (www.bpg.co.nz).

We propose to manage erosion on the site in the following ways:

- The site is only excavated for the foot print of our building; the rest of the site will remain undisturbed.

" The drive is used for access to and from the site.

- Our buildings are relatively quick to build so the site is kept tidy and rubbish free at all times.

- Our company has instructed our concrete supplier to clean all trucks on site within a bunded area.

- Our contract manager will also assess the site for sediment control before works begin to ensure appropriate measures are in place.

Totalspan Stormwater Management Plan

Date: 15/4/2025

Client: Cameron Project

Address: 7 Swindon Lane, Amberley

ROOF AREA OF TS BUILDING: 28m2

GUTTER PROFILE:



PLAN:

The stormwater management plan is to run the 2 x 80mm downpipe into a 100 mm uPVC stormwater pipe and go at 1:100 fall into a soak pit as indicated on the site plan.

Thank you.

SOAK PIT DETAILS

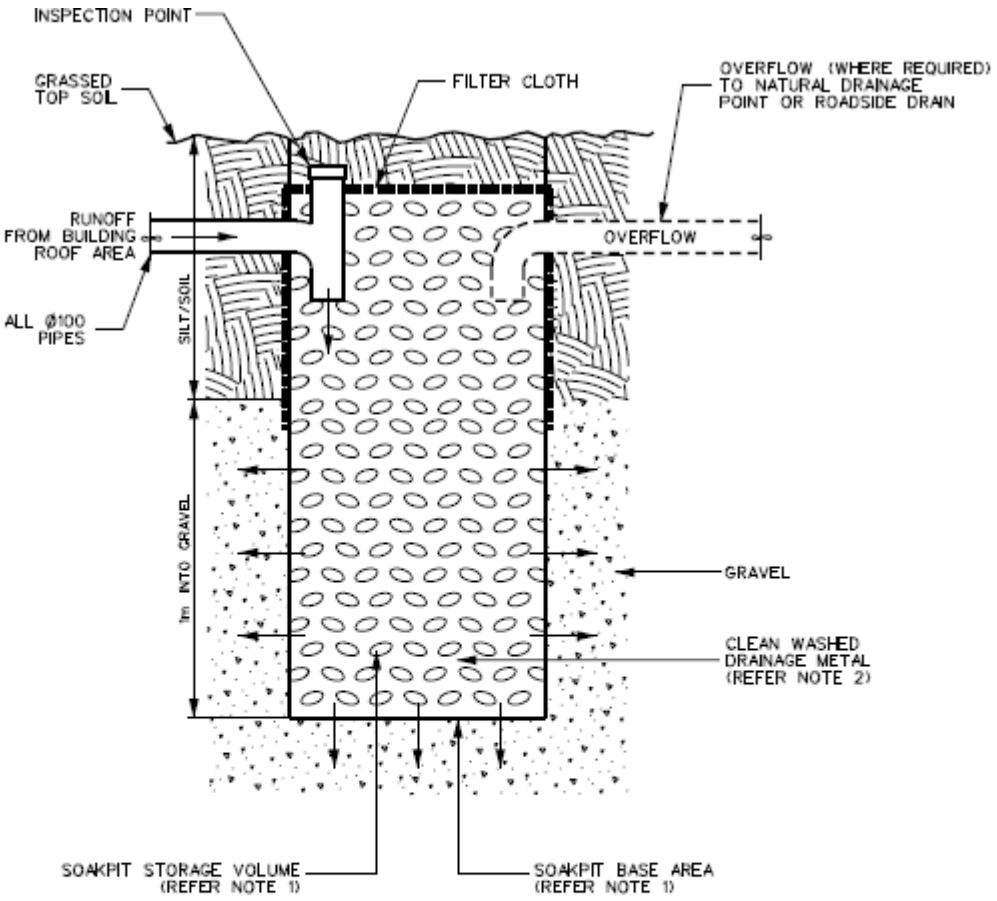

NOTES:

1. SOAK PIT SIZING - PROVIDE 1m² OF BASE AREA PER 100m² OF ROOF AREA AND 2m³ OF STORAGE VOLUME PER 100m² OF ROOF AREA (ALLOW 0.38 FACTOR FOR VOID SPACE) OR ALTERNATIVELY PROVIDE FULL DESIGN CALCULATIONS IN ACCORDANCE WITH VERIFICATION METHOD E1/VM1 SECTION 9.
2. CLEAN WASHED DRAINAGE METAL - TO BE EITHER TAILINGS 20mm-40mm, ROUNDS 40mm-65mm, BOULDERS 65mm-120mm, ROCKS 100mm-150mm OR SIMILAR.

Figure 7: Bedding and backfilling
Paragraphs 5.2.1, 5.3.1 and 5.4.1

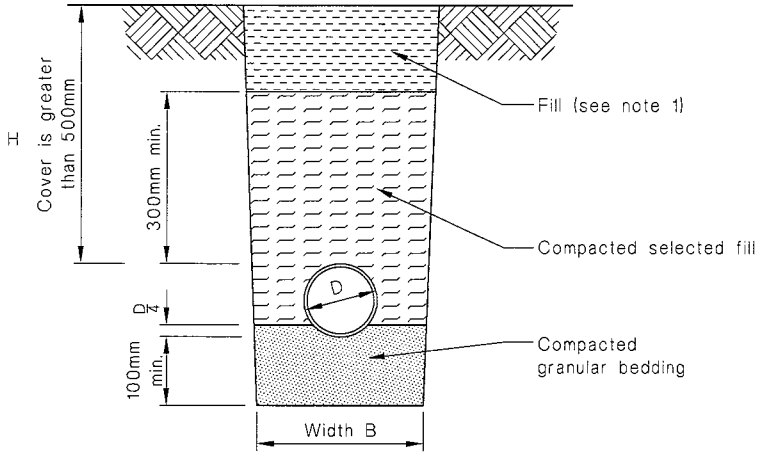

(a) Bedding type 'B' of NZS 7643
Cover greater than 500mm

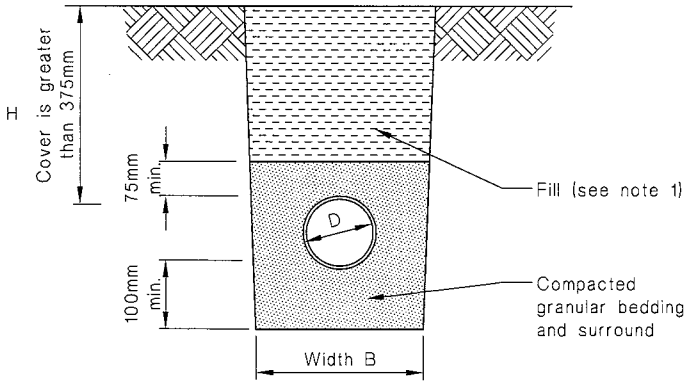

(b) Bedding type 'D' of NZS 7643
Cover greater than 375mm

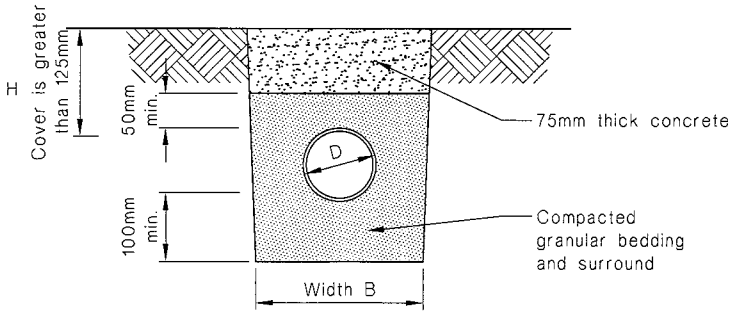

(c) Cover between 125mm and 375mm

NOTE:
1. Fill shall be:
-Ordinary fill where drains are located below gardens and open country.
-Compacted selected fill where the drains are located below residential driveways and similar areas subject to light traffic.

Management Plan for Stormwater Disposal System

1. This management plan applies to the building consent and property stated below and this Management Plan will be remained applicable even if the property ownership changes. Any future changes to this management plan will require a new Stormwater Discharge application.

2. During construction of a dwelling or earthworks on the site, the sump should be inspected once every month and cleaned of any accumulated sediments. This should be covered in the Erosion and Sediment Plan.

3. Thereafter, the sump and soak pit shall be inspected and maintained throughout the year, by the property owner, with particular attention given to maintenance before the wet season.

4. Maintenance shall include, but is not limited to, the removal of any litter, debris, and accumulated sediment.

5. The sump grate shall remain in place at all times, except when inspections and maintenance are undertaken.

6. The sump shall not be used for the disposal of any other liquids or waste apart from onsite stormwater.

7. The top outlet pipe cap shall remain in place at all times as a watertight seal, except when inspections and maintenance are undertaken.

8. At the time of inspections, should the silt depth in the bottom of the sump exceed 50mm, it shall be removed immediately and disposed of appropriately.

9. In swales inspect and ensure adequate vegetation cover with grass maintained at 50-100mm. Remove undesirable weeds/vegetation any litter, debris, and accumulated sediment. Remediate any areas of standing water.

10. The owner shall take all practical steps to avoid spills of fuel, oil, or any other contaminant into the swale, sump, or soak hole. If a spill does occur, this shall be removed immediately, and the contents disposed of appropriately.

11. If a storm is recognised as having a 2% (1 in 50 year) or less Annual Exceedance Probability (AEP) and there is surface runoff or water pooling, then the owner shall take immediate measures to replace/extend the soak hole and associated connecting pipework to Council's satisfaction.

Note: Conditions 1, 2 and 3 are mandatory. The maintenance and monitoring plan will not be accepted if that information is removed.

Street Address:	7 Swindon Lane, Amberley
Owners Name:	Don Campbell
Owners Signature:	 X

Water Supply

- Urban Service Connection
- Urban Sub Main
- Manifold

Sewer

- Gravity Main
- Service
- Manhole

Stormwater

- Open Drain

Other

- Parcel
- Hurunui Rating Unit
- Settlement Boundary



7 Swindon Lane, Amberley

Hurunui District Council does not guarantee that the data in this map is without flaw of any kind and disclaims all liability for any errors, loss or other consequences which may arise from relying on any information depicted. Cadastral and topographic data sourced from LINZ. Crown Copyright Reserved.

Date:	23/04/2025
Scale:	1:564
Print Size:	A4 Landscape
Projection:	NZTM
Produced by:	arcservice

N

HURUNUI District Council

Gable Range
Producer Statement and Structural Details
(IL1 Non-Habitable, Unlined)

INDEX:

1	Contents
2	Producer Statement
3	Specifications
4	Durability Statement
5	Site Plan
6-11	Engineering Tables
12	Foundation Details SD-F01
13	Foundation Details SD-F02
14	Frame Details SD-P01
15	Major Openings SD-M01
16	Minor Door Openings SD-M05
17	Bracing Details
18	Flashing Details
19	Flashing Detail SD-E01

CLIENT:

Don Campbell
7 Swindon Lane
Amberley
CAN
7410

BUILDING:

System Ref Code:	JH.309 (v3.3.2.15)
Location:	Lat: -43.146309 Lng: 172.730994
Wind Speed: Vdes Θ:	34.22 m/s
Snow Loading:	Sg = 0.9 kPa
Span:	4.000m
Length:	7.000m
Knee Height:	2.400m
Bay Size:	2x3.500m
Roof Pitch:	15°
Roofing Sheet:	7-Rib 0.35mm
Cladding Sheet:	7-Rib 0.35mm
Downpipe Type:	80mm Coloursteel
Floor Type:	Concrete Slab
Area:	Total 28.0m²

NOTES :

1 - Contractor to confirm all dimensions on site at time of construction
2 - These drawings must not be reproduced without express permission from Spanbild New Zealand Limited.

TOTALSPAN
A Division of Spanbild New Zealand Ltd
112 Waterloo Road, Hornby
P.O.Box 11-013, Christchurch Details

SPANBILD
DESIGN. MANUFACTURE. BUILD.

PRODUCER STATEMENT – PS1
DESIGN

BUILDING CODE CLAUSE(S): B1 **JOB NUMBER:** JH.309
ISSUED BY: Spanbild NZ Ltd
(Engineering Design Firm)
TO: Totalspan North Canterbury
(Owner/Developer)
TO BE SUPPLIED TO: Hurunui District Council
(Building Consent Authority)
IN RESPECT OF: 4.000m span x 7.000m length; IL1 portal building; DL=50yrs
(Description of Building Work)
AT: 7 Swindon Lane, Amberley, 7410, CAN
(Address, Town/City)
LEGAL DESCRIPTION: **N/A**

We have been engaged by the owner/developer referred to above to provide *(Extent of Engagement)*:
Structural Design as shown on sheets 1, 2, 5-16
in respect of the requirements of the Clause(s) of the Building Code specified above for all, as specified in the Schedule, of the proposed building work.

The design carried out by us has been prepared in accordance with:

- ✔Compliance documents issued by the Ministry of Business, Innovation & Employment *(Verification method/acceptable solution)* B1/VM1, B1/VM4 and/or;
- Alternative solution as per the attached Schedule.

The proposed building work covered by this producer statement is described on the drawings specified in the Schedule, together with the specification, and other documents set out in the Schedule.

On behalf of the Engineering Design Firm, and subject to:

- Site verification of the following design assumptions:
- All proprietary products meeting their performance specification requirements;

I believe on reasonable grounds that:

- the building, if constructed in accordance with the drawings, specifications, and other documents provided or listed in the Schedule, will comply with the relevant provisions of the Building Code and that;
- the persons who have undertaken the design have the necessary competency to do so.

~~I recommend the **N/A** level of **construction monitoring.**~~

I, *(Name of Engineering Design Professional)* Ryan Moreau , am:

- ✔CPEng number 1013731

and hold the following qualifications BE(Hon), CPEng, CMEngNZ

The Engineering Design Firm holds a current policy of Professional Indemnity Insurance no less than $200,000
The Engineering Design Firm is a member of ACE New Zealand.

SIGNED BY *(Name of Engineering Design Professional)*: Ryan Moreau

ON BEHALF OF *(Engineering Design Firm)*: Spanbild NZ Ltd Date:14-04-2025

Note: This statement has been prepared solely for the Building Consent Authority named above and shall not be relied upon by any other person or entity. Any liability in relation to this statement accrues to the Engineering Design Firm only. As a condition of reliance on this statement, the Building Consent Authority accepts that the total maximum amount of liability of any kind arising from this statement and all other statements provided to the Building Consent Authority in relation to this building work, whether in tort or otherwise, is limited to the sum of $200,000.

This form is to accompany **Form 2 of the Building (Forms) Regulations 2004** for the application of a Building Consent.

SCHEDULE TO PS1

The proposed building work covered by this producer statement is described on the drawings with project reference and sheet numbers on the PS1

The specifications, durability statement and maintenance requirements are set out in the drawings.

Alternative Solutions apply for areas that the potential for liquefaction or lateral spread has been identified as it is outside B1/VM4. The alternative solutions are MBIE guidance documents "Planning and engineering guidance for potentially liquefaction prone land" and "Repairing and re-building houses affected by the Canterbury Earthquakes"

The foundations require suitable soils. This IL1 foundation (generally unlined) has been designed for;

- Geotechnical Ultimate Bearing Capacity of 225 kPa,
- Where there is no potential for liquefaction or lateral spread or
- Liquefaction Vulnerability where liquefaction damage is unlikely (very low or low liquefaction vulnerability),
- Non-expansive soils.

- Indications of local instability,
- Foundations closer than 3 x height of a bank plus 0.6 m measured from the foot of the bank, and the length of the flat at the base of the bank is a minimum of 4 times the height of the bank,
- Slope steeper than 5 degrees away from the building platform.
- Buried organic topsoil, peat, soft clays, buried services or expansive clays, any fill that does not have a certificate of suitability issued in accordance with NZS 4431

TOTALSPAN®
STEEL BUILDINGS

Project Ref: JH.309

© Copyright 2017 Spanbild NZ Ltd. All rights reserved.

Don Campbell
7 Swindon Lane
Amberley
7410
021 1521186

Gable Range - Design

Producer Statement

SPECIFICATIONS

GENERAL NOTES

1. IMPORTANT DESIGN LIMITATIONS

1.1. Design limitations apply to any item or alteration not specifically stated or clearly represented within the scope of these engineering specifications. This is a CAD drawing which must not be altered by manual methods, exceptions to this are:

1.1.1. The documentation clearly states where "generic" items can be crossed out, or the applicable detail circled to provide clarity.

1.1.2. Additional specific design has been carried out by a CPENG engineer with a PS1 supplied covering "part" design works for any ammedment/alterations. Alternative/Additional drawings shall be supplied or these specifications must be clearly marked up in red pen and accompanied by the PS1 engineer's signature on each drawing altered which is covered by the additional specific design, as above.

1.1.3. A letter has been supplied in writing, signed by the original engineer(s) covering "minor" ammedments/alterations or clarifications to varying interpretations of the design drawings.

1.2. Habitable/Lined Buildings are not covered within this scope of work.

2. GENERAL

2.1. All work shall conform to the New Zealand Building Code

2.2. B2 Durability shall be covered by respective product/manufacturers durability statements

3. LOADINGS

3.1. Buildings are designed to AS/NZS 1170

3.1.1. Refer Schedule for Windspeed, Vdesθ in m/s.

3.1.2. Refer Schedule for Ground Snow Load if applicable in kPa.

3.1.3. The roofing is not designed for point loads of 1.1kN, these are Surfaces (including transparent surface) over which supports (e.g., boards or ladders) are required to be laid to support actions incidental to maintenance (e.g., people).

3.1.4. Earthquake loads, except for "near fault" locations due to the light-weight structure are not critical for unlined, Importance Level 1 & 2 standard structures with cladding as specified below only.

3.1.5. Habitable/Lined or Importance Level 3 and greater structures require specific design engineering in addition to this specification covering the scope of works. (Importance Level 2 structures have been designed to resist "structural damage" deflections only).

3.1.6. Any loads exceeding the above shall require specific design engineering in addition to this specification covering the scope of works.

4. FOUNDATIONS

4.1. Ground shall have a safe bearing capacity of at least 75kPa (225kPa Ultimate).

4.1.1. This is achieved by meeting "good ground", safe bearing capacity of at least 100kPa in accordance with NZS 3604 (i.e. exceeds the above) OR;

4.1.2. Safe bearing capacity of at least 75kPa by Site Specific Geo-Technical Report (as NZS 3604 has no means of determining a minimum safe bearing of 75kPa).

5. CONCRETE

5.1. Designed to NZS 3101

5.2. Remove vegetation and loose material from the building footprint, backfill with compacted hard-fill if required and lay sand blinding to the underside of the concrete slab. Ensure the surface of the slab will be at least 100mm above the highest level of cleared ground around the slab.

5.3. Concrete shall have a maximum aggregate size of 20mm and minimum 20MPa compression strength at 28 days.

5.4. Refer Foundation Details for further details.

5.5. Lesser Ductile Mesh is allowed to be used for Importance Level 1 structures only

5.5.1. Refer NZS 3101 Clause 5.3.2.7 (a)

6. STEELWORK & COMPONENTS

6.1. Boxed Sections

6.1.1. Shall be fixed through flange centres within 100mm from the end and at @ 600mm centres max. (+50mm tolerance) using #10 Self-Drilling Screws. Excludes exterior flanges of Girts & Purlins (as cladding teks provide fastening).

6.2. All Steelwork & Components shall (where applicable) conform to:

6.2.1. AS/NZS 4600 - Cold-formed steel structures

6.2.2. AS/NZS 1252 - High strength steel bolts with associated nuts and ...

6.2.3. AS/NZS 1365 - Tolerances for flat-rolled steel products

6.2.4. AS/NZS 4505:2013 - Garage doors and other large access doors

6.2.5. AS 1110 - ISO metric hexagon bolts and screws

6.2.6. AS 1112 - ISO metric hexagon nuts...

6.2.7. AS 1397 - Continuous hot-dip metallic coated steel sheet and strip

6.2.8. AS 1580 - Paints and related materials - Methods of test

6.2.9. AS 3566 - Self-drilling screws for the building and construction industries

6.2.10. AS 4291.1 - Mechanical properties of fasteners made of carbon steel and ...

6.2.11. IFI-114(Imperial) / IFI-505(Metric) - Break Mandrel Blind Rivets

7. CLADDING

7.1. Roof and Wall Sheeting shall be 0.35 - 0.55 B.M.T, AZ150 Coating, G550 Steel only. Alternative claddings (excluding glass reinforced panel), require an independent specific design certificate for the scope of work.

7.2. Fixing pattern as per E2/AS1 or NZ MRM - NZ Metal Roof and Wall Cladding Code of Practice.

7.3. Flashings shall be fixed as per manufacturers recommendations/instructions.

8. SERVICES

8.1. Penetrations through framing members

8.1.1. Typical hole diameter(s) shall not exceed 29mm (1 ⅛ inch)

8.1.1.1. A single 44mm (1 ¾ inch) hole per C150, C250 or C300 section only is allowed to accommodate an up to 40mm waste water pipe

8.1.2. Distance between holes along the section shall be no less than 1000mm

8.1.3. Holes shall be located:

8.1.3.1. Central in the web, (within the centre 1/3 of the web depth)

8.1.3.2. At least 200mm from the end of a member

8.1.4. Rubber grommets to be applied to un-swaged service holes

8.1.5. Larger and more frequently spaced holes are allowed, however please consult with an engineer first for written approval to ensure compliance with AS/NZS 4600.

TOTALSPAN®
STEEL BUILDINGS

Project Ref: JH.309

© Copyright 2017 Spanbild NZ Ltd. All rights reserved.

Don Campbell
7 Swindon Lane
Amberley
7410
021 1521186

Gable Range - Design

Specifications

MANUFACTURERS STATEMENT - DURABILITY

Cladding

To satisfy the requirements of Clause B2:"Durability" of the NZBC and to ensure the cladding material meets a 15-year durability life and a 50 year intended working life (design life), the following requirements must be followed:

Cladding Range of Product and Use

- Coating Type: Zinc/Aluminium & Painted (Coloured Steel).
- Steel thickness range: 0.35mm - 0.55mm BMT
- Steel grade range: G300 - G550
- Application: Standard Totalspan Roof and Wall Cladding
- Profile: Totalspan 7 Rib, Totalspan 6 Rib, Totalspan Corrugate

Requirements

- Fixing and installation of the cladding must be done exactly in accordance with the manufacturer's instructions and specifications.
- Normal maintenance must be regularly carried out on the exterior surface of the cladding and visible internal surfaces of the cladding.The following guide must be followed to ensure the durability requirements are met.

Normal Maintenance

- Normal Maintenance to be completed in accordance with Durability - Acceptable Solution B2/AS 2.1.3
- Corrosion Zones C1 and C2 (Reference SNZ TS 3404:2018, Durability requirements for steel structures and components, corrosivity zone maps, Figure 1 – 7, page 10 – 16)

  Rain-washing only required on exposed (open to airborne salts and rain wetting) material. Sheltered (open to airborne salts, but not rain washed) or protected areas such as under spouting, top-cladding sheets and tops of doors and underside of Awnings and Garaports require washing every 3 months.

- Corrosion Zones C3 and C4 (Reference SNZ TS 3404:2018, Durability requirements for steel structures and components, corrosivity zone maps, Figure 1 – 7, page 10 – 16)

  Rain-washing only required on exposed (open to airborne salts and rain wetting) areas. Sheltered (open to airborne salts, but not rain washed) and protected areas such as under spouting, top cladding and tops of doors and underside of Awnings and Garaports require washing down every month and whenever corrosive salts are present.

Extended Maintenance, Painting or Repainting

Extended Durability

Once the metallic coating or the paint system has weathered away, signs of red rust for bare material or signs of the metallic coating for painted material, painting of the entire surface is required to extend the life of the cladding product. Paint manufacturers recommendations are to be followed for surface preparation and paint type to be used.

Evident Corrosion

- Areas that show signs of white or red rust/corrosion (typically in unwashed areas) require cleaning back with a stiff brush and cleaner to remove all dust, surface contaminants and corrosion products and present a sound substrate for painting. Priming of the surface and application of two coats of paint as per the Paint Manufacturer's recommendations is then required.
- Particular attention needs to be paid to laps (side, end, flashing etc) where earlier corrosion may start due to moisture and dirt entrapment.

  If evident corrosion is not treated quickly rapid deterioration of the sheet may occur which could result in perforation. At this stage replacement of the affected sheet is the best option.

Steel Framing

To satisfy the requirements of Clause B2:"Durability" of the NZBC and to ensure the structural framing material meets a 25-year durability for carports and a 50-year durability for all other buildings, the following requirements must be followed:

Steęl Framing Range of Product and Use

- Coating Type: Galvanised
- Steel thickness range: 0.55mm – 3.0mm BMT
- Steel grade range: G300 – G550
- Application: Standard Totalspan Purlins, Girts, Portal Frames, Door Jambs, Wall Uprights, Bridging, Posts

Profile:
C Sections – C80 to C300
Z Sections – 100x53, 150x65
Tophat Sections – 100x163, 120x170, 150x183
Square Hollow Sections - 65x65, 75x75

Requirements

- Regular inspections of the steel work and maintenance at the first signs of a problem will extend the durability of the sections.
  Where sections are exposed (open to airborne salts and rain wetting) or sheltered (open to airborne salts but not rain washed), or located in salt marine, corrosive industrial or unusually high corrosive enviromentsthe below Normal Maintenance must be adhered to. Please contact your local Totalspan branch for specialist advice if unsure requirements.
  This also applies to all Steelwork that is exposed to the wind but is protected from the rain located in an open sided structure such as carports, awnings or structures closed in on one side only.
  Maintenance is necessary when the Galvanised coating ceases to provide sacrificial protection to the steel base, or where the appearance is no longer aesthetically acceptable. At the first sign of corrosion or rust staining, the surface should be treated and painted with an appropriate coating system. All maintenance should be carried out in accordance with AS/NZS 2312:2002 (Incorporating Amendment No. 1) [c] and New Zealand Steelwork Corrosion Coatings Guide (HERA Report R4-133) [d].

Normal Maintenance

- Normal Maintenance to be completed in accordance with Durability - Acceptable Solution B2/AS 2.1.3

-Corrosion Zones C1 and C2 (Reference SNZ TS 3404:2018, Durability requirements for steel structures and components, corrosivity zone maps, Figure 1 – 7, page 10 – 16)

Rain-washing only required on exposed (open to airborne salts and rain wetting) sections.
Sheltered (open to airborne salts, but not rain washed)sections require washing every 3 months. All other materials should be inspected at the time of washing and if required, cleaned of any contaminants.

-Corrosion Zones C3 and C4 (Reference SNZ TS 3404:2018, Durability requirements for steel structures and components, corrosivity zone maps, Figure 1 – 7, page 10 – 16)

Rain-washing only required on exposed (open to airborne salts and rain wetting) sections
Sheltered (open to airborne salts, but not rain washed)sections require washing down every month and whenever corrosive salts are present. All other materials should be inspected at the time of washing and if required, cleaned of any contaminants.

Manufacturer:

Spanbild New Zealand Limited
112 Waterloo Rd
Sockburn
CHRISTCHURCH

TOTALSPAN®
STEEL BUILDINGS

Project Ref: JH.309

© Copyright 2017 Spanbild NZ Ltd. All rights reserved.

Don Campbell
7 Swindon Lane
Amberley
7410
021 1521186

Gable Range

Durability Statement

TOTALSPAN®

STEEL BUILDINGS

Project Ref: JH.309

© Copyright 2017 Spanbild NZ Ltd. All rights reserved.

Don Campbell
7 Swindon Lane
Amberley
7410
021 1521186

Gable Range

Site Plan

ROOF - (BAYS 2-1)

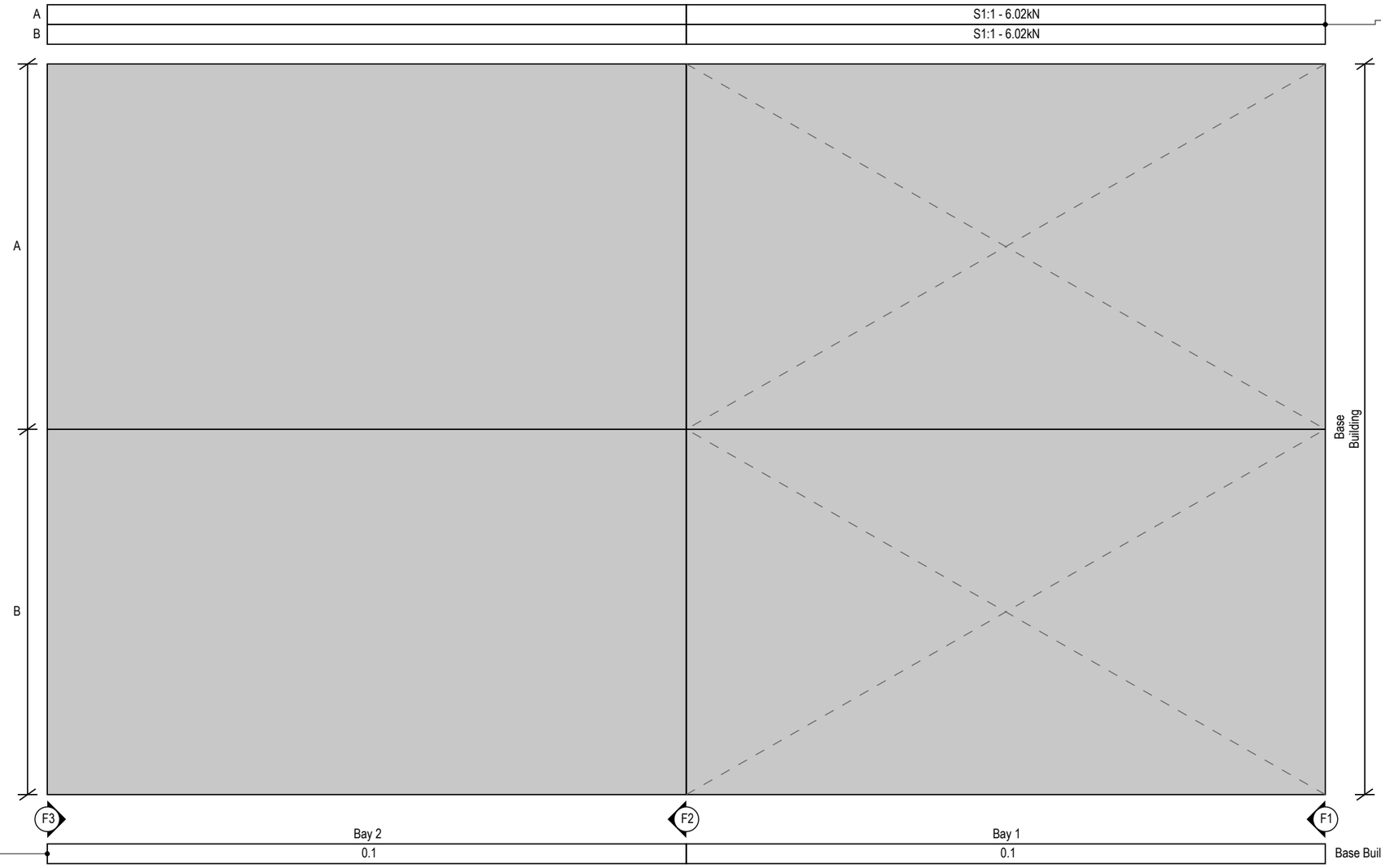

BRACING kN (Totals)		
Location	**Required**	**Achieved**
A	0.93 kN	6.02 kN
B	0.93 kN	6.02 kN

FRAMING SECTION TABLES	
Base Building - 0.1	
Design	Closed
Purlin (Bridge Count)	C100-10(1)
Purlin Centres	0.976m

BRACING DESIGN NOTES

All bracing must be connected to main structural members i.e. Portal Legs, Portal Rafters, End Wall, Uprights & Main Access Door Jambs. Bracing shall not be solely connected to intermediate members such as Girts, Purlins, Minor Access Door Jambs & PA Door Jambs.

BRACING LEGENDS

S1:1

Mitek Strip-Brace 27x0.6mm G550, configured as a single cross.

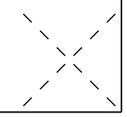

VIEWS

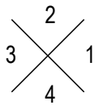

TOTALSPAN® STEEL BUILDINGS

Project Ref: JH.309

© Copyright 2017 Spanbild NZ Ltd. All rights reserved.

Don Campbell
7 Swindon Lane
Amberley
7410
021 1521186

Gable Range - Design

Engineering Tables

VIEW 2 - BUILDING SIDE (BAYS 1-2)

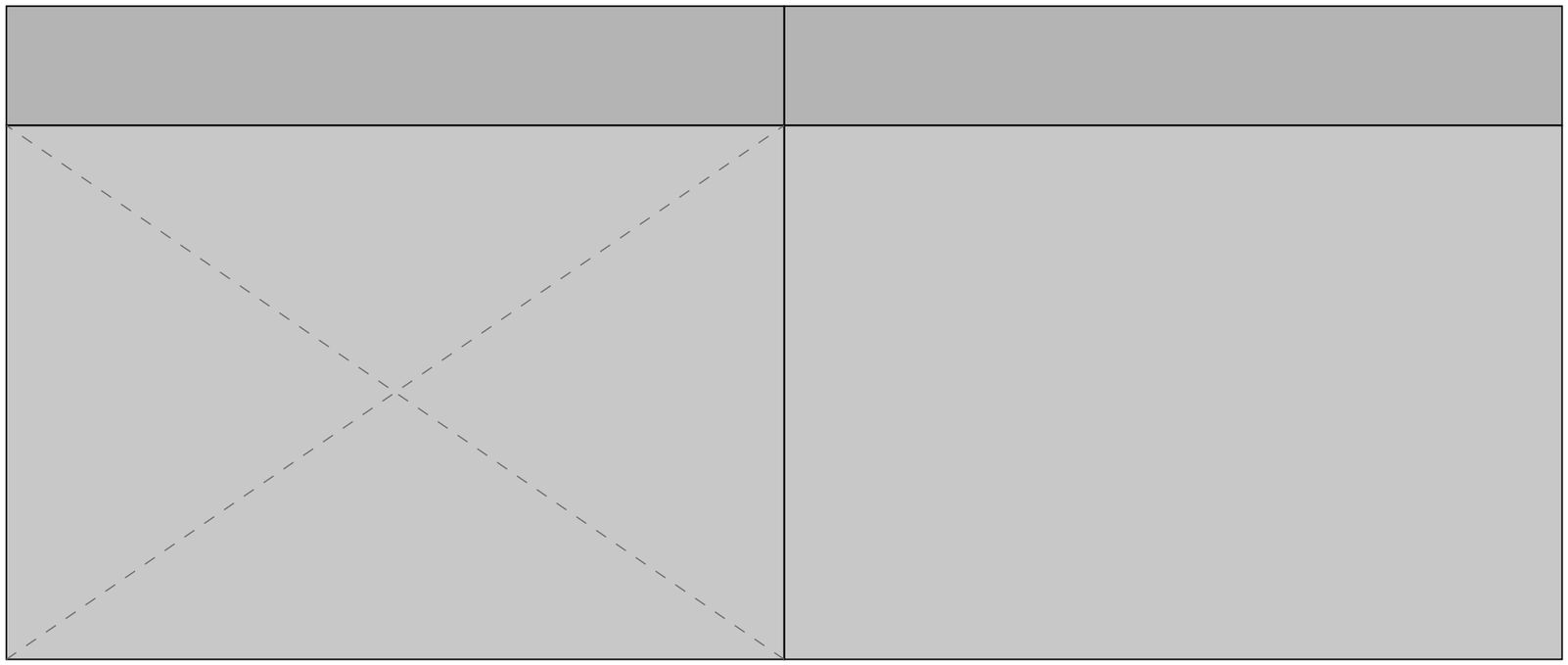

FRAMING SECTION TABLES	
Base Building - 2.1	
Design	Closed
Girt (Bridge Count)	C80-95(1)
Girt Centres	1.140m

	Bay 1	Bay 2
	2.1	2.1
	S1:1 - 5.77kN	

BRACING kN (Totals)	
Required	1.77 kN
Achieved	5.77 kN

VIEWS
2
3 1
4

TOTALSPAN® STEEL BUILDINGS

Project Ref: JH.309

© Copyright 2017 Spanbild NZ Ltd. All rights reserved.

Don Campbell
7 Swindon Lane
Amberley
7410
021 1521186

Gable Range - Design

Engineering Tables

VIEW 4 - BUILDING SIDE (BAYS 2-1)

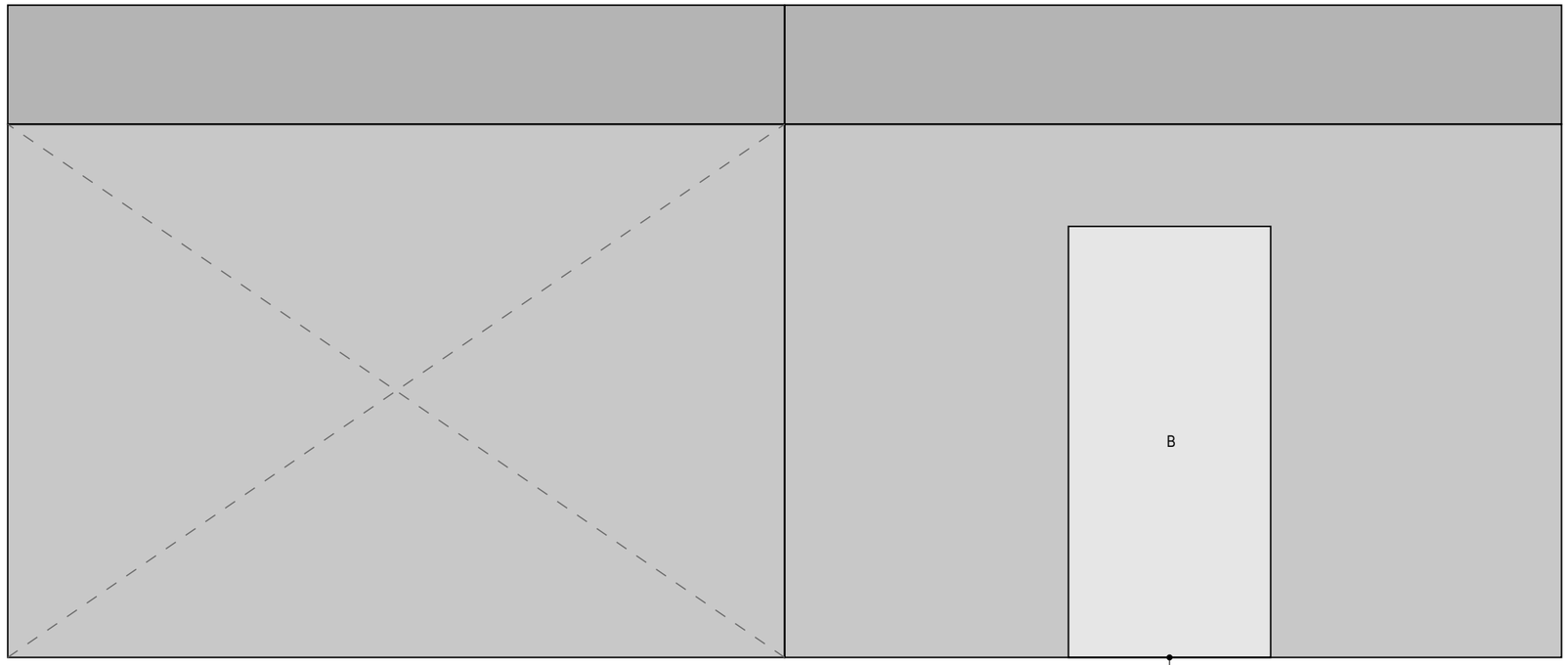

OPENING SECTION TABLES	
Opening - B	
Jambs & Head Beam	C80-95

FRAMING SECTION TABLES	
Base Building - 4.1	
Design	Closed
Girt (Bridge Count)	C80-95(1)
Girt Centres	1.140m

F3 F2 F1

	Bay 2	Bay 1
	4.1	4.1
	S1:1 - 5.77kN	

BRACING kN (Totals)	
Required	1.77 kN
Achieved	5.77 kN

VIEWS
2
3 1
4

TOTALSPAN® STEEL BUILDINGS

Project Ref: JH.309

© Copyright 2017 Spanbild NZ Ltd. All rights reserved.

Don Campbell
7 Swindon Lane
Amberley
7410
021 1521186

Gable Range - Design

Engineering Tables

FRAME F1

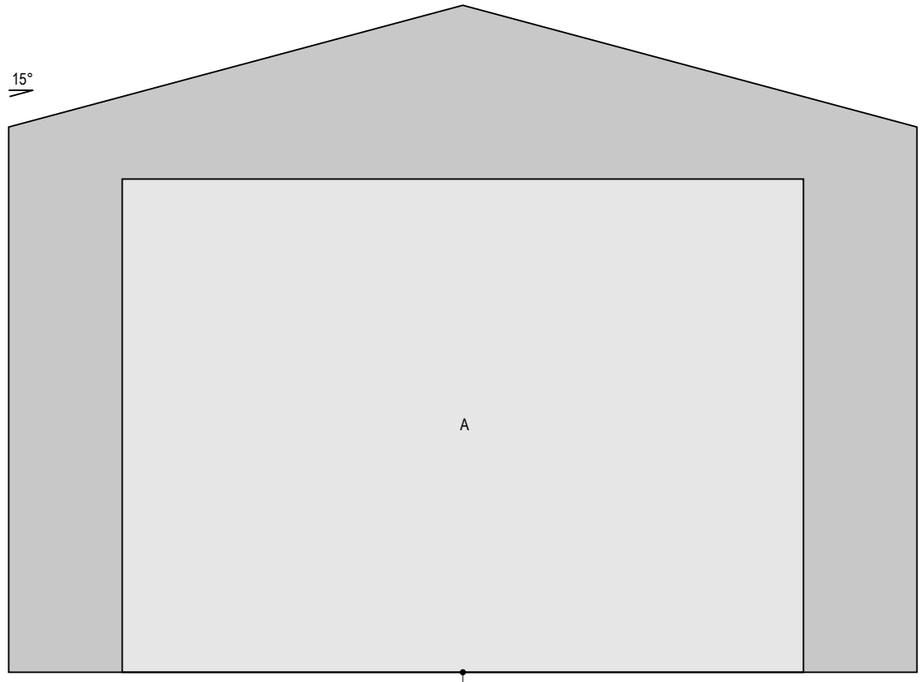

FRAMING SECTION TABLES	
Base Building - B.1	
Design	Closed
Leg & Rafter	C150-10
Girt	C80-75
Girt Centres	1.140m

OPENING SECTION TABLES	
Opening - A	
Jambs	C150-15
Head Beam	C150-10

VIEWS
2
3 1
4

TOTALSPAN® STEEL BUILDINGS

Project Ref: JH.309

© Copyright 2017 Spanbild NZ Ltd. All rights reserved.

Don Campbell
7 Swindon Lane
Amberley
7410
021 1521186

Gable Range - Design

Engineering Tables

FRAME F2

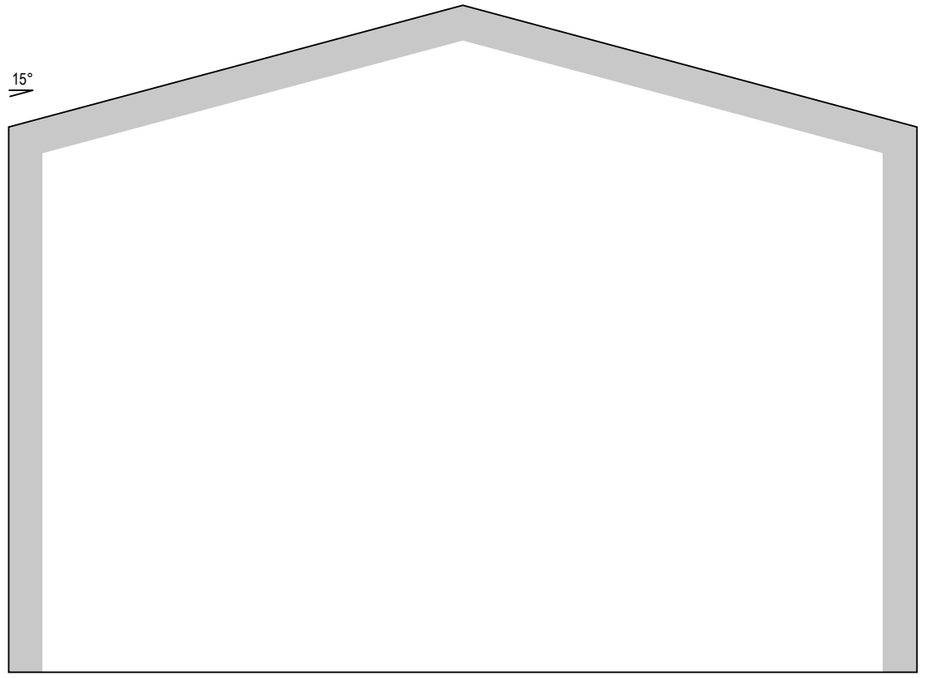

FRAMING SECTION TABLES	
Base Building - B.2	
Design	Closed
Leg & Rafter	C150-10

Base Building
B.2

VIEWS
2
3 1
4

TOTALSPAN STEEL BUILDINGS

Project Ref: JH.309

© Copyright 2017 Spanbild NZ Ltd. All rights reserved.

Don Campbell
7 Swindon Lane
Amberley
7410
021 1521186

Gable Range - Design

Engineering Tables

FRAME F3

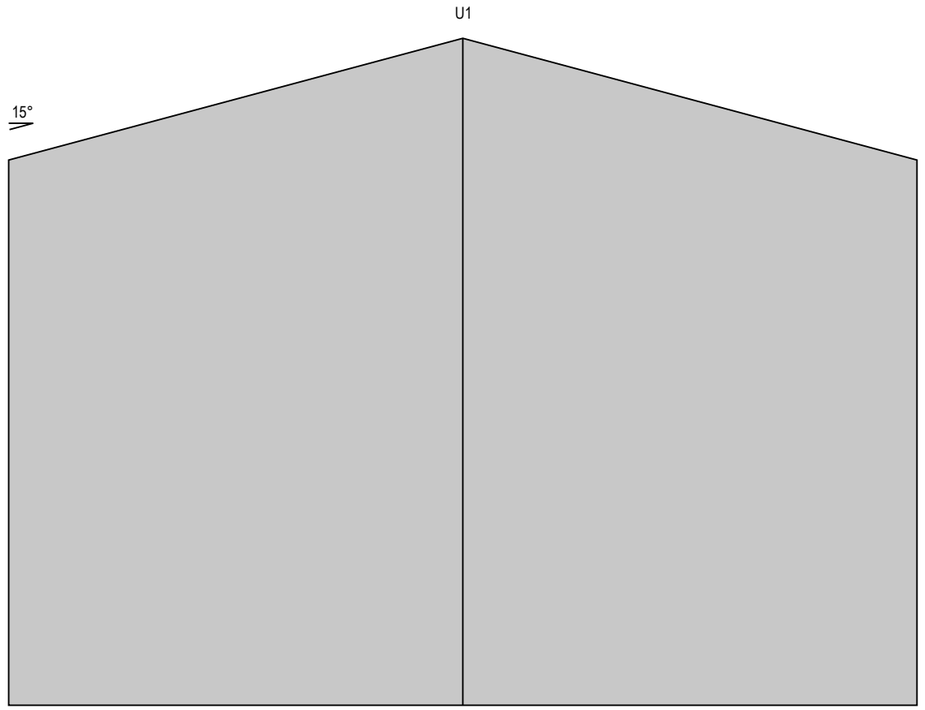

FRAMING SECTION TABLES	
Base Building - B.3	
Design	Closed
Leg & Rafter	C150-10
Upright - U1	C80-95
Girt	C80-75
Girt Centres	1.140m

VIEWS
2
3 1
4

TOTALSPAN® STEEL BUILDINGS

Project Ref: JH.309

© Copyright 2017 Spanbild NZ Ltd. All rights reserved.

Don Campbell
7 Swindon Lane
Amberley
7410
021 1521186

Gable Range - Design

Engineering Tables

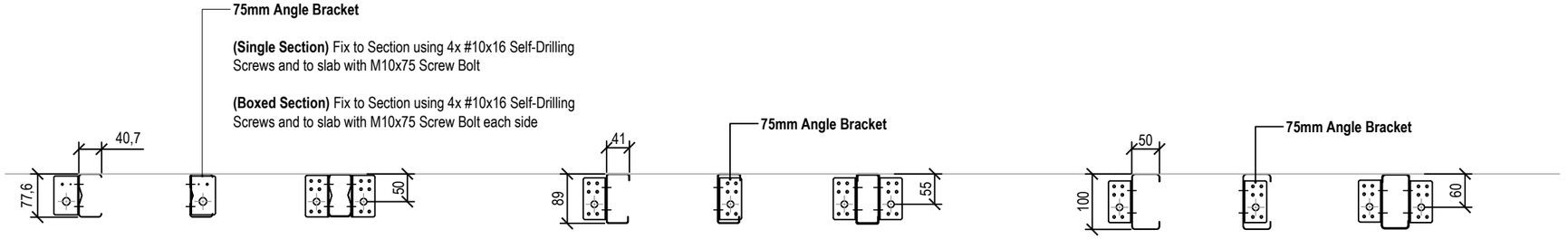

- **C80 Foundation Connections**
  SCALE 1:10

- **C90 Foundation Connections**
  SCALE 1:10

- **C100 Foundation Connections**
  SCALE 1:10

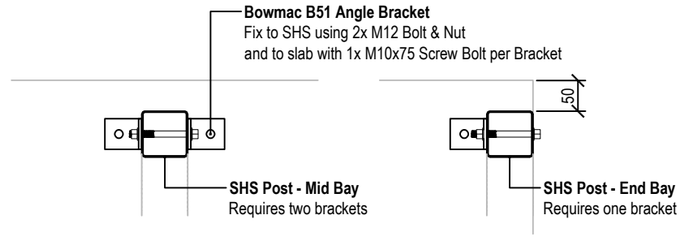

- **SHS Foundation Connections**
  SCALE 1:10

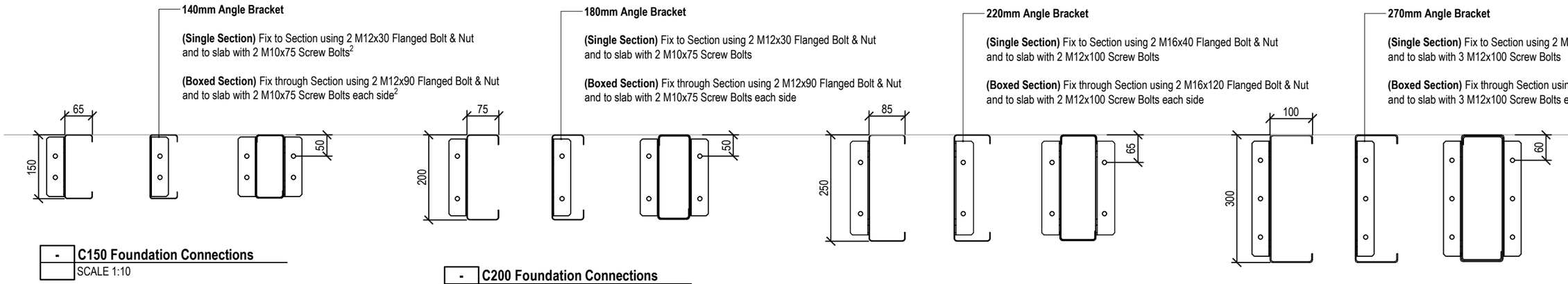

- **C150 Foundation Connections**
  SCALE 1:10

- **C200 Foundation Connections**
  SCALE 1:10

- **C250 Foundation Connections**
  SCALE 1:10

- **C300 Foundation Connections**
  SCALE 1:10

Important Notes

1. Recommended edge distances are listed above, brackets may be repositioned slightly +/- 3mm however concrete edge distance to bolt centre shall not be less than be 50mm
2. **C/B150-15 & C/B150-19 Portal Legs** shall have a M10x38mm Sqaure Washer to M10x75 Screw Bolts (otherwise, not required.)

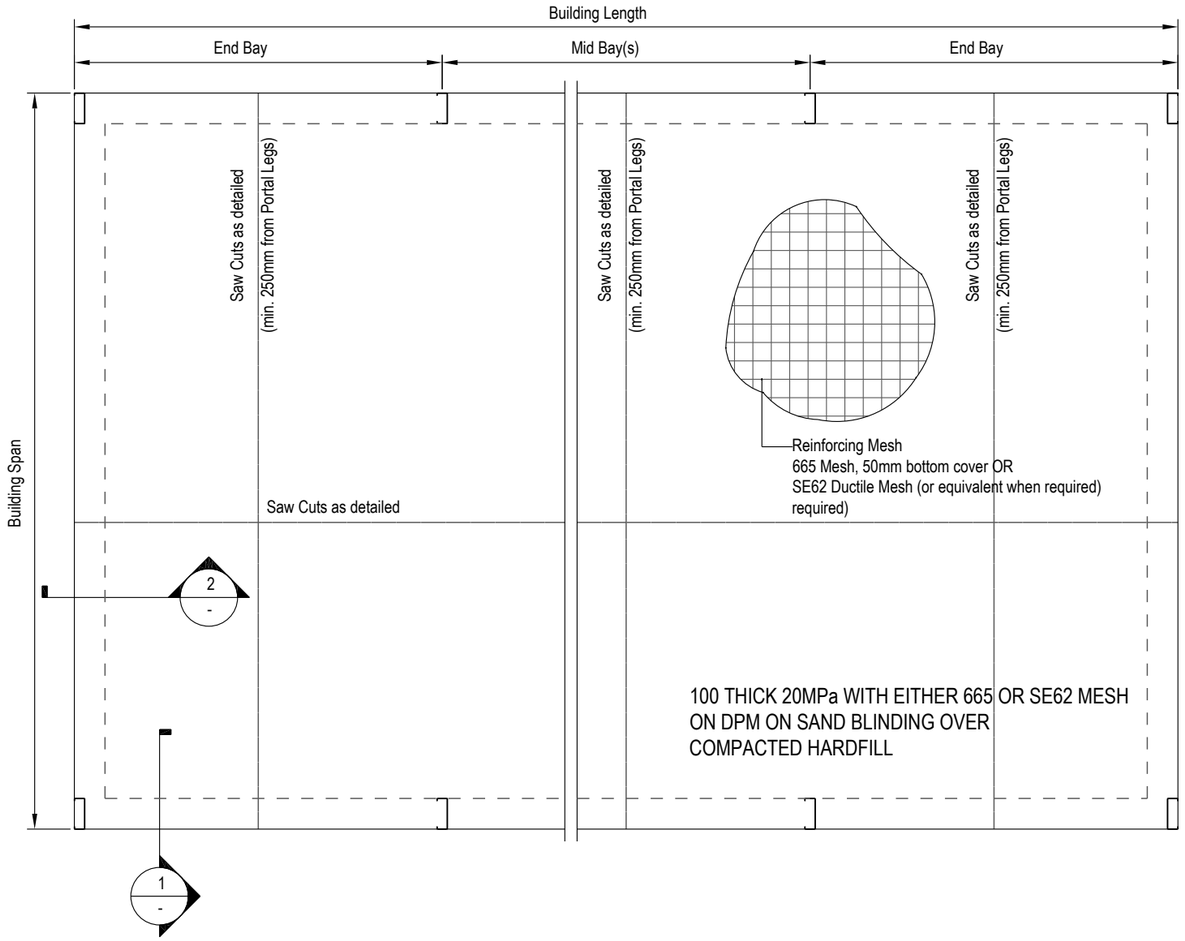

- **INDICATIVE SLAB PLAN (FOR NOTATION REFERENCE ONLY)**
SCALE 1:50

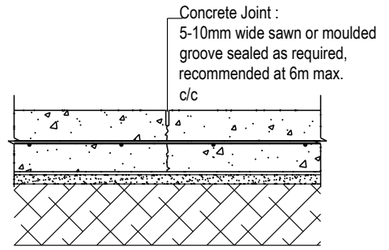

- **TIED JOINT / SAW CUTS**
SCALE 1:10

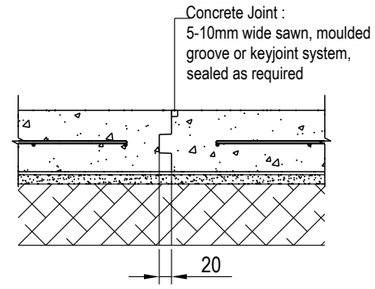

- **FREE KEYED JOINT**
SCALE 1:10

Important Notes

1. **Perimeter reinforcing**
   1.1. **Central reinforcing specified "along" building length;** shall continue "across" building span
   1.2. **Top and Bottom reinforcing specified "along" building length;** the lesser reinforcing specified (where applicable) shall be used for single central reinforcing "across" building span. Reinforcing "across" shall wrap around the corners 600mm to remain "continuous".
2. Slab thickness may be increased only in case of large machinery, equipment where heavier traffic loadings are required. Check control joint requirements as per CCANZ guidelines and install where recommended.
3. This slab has been designed in accordance with NZS3101:2006 and compliant to where lesser ductile mesh may be used per clause 5.3.2.7 (a) where "The yielding of reinforcement will not occur at the ultimate limit state".
4. Typical GL to FFL is 100mm for a "non-habitable" foundation.
5. Saw cuts to be minimum 250mm away from Portal Legs.
6. In areas where soil bearing is less than 225kPa UBC, excavate trench (max 600mm depth) to ground with 225kPa UBC and backfill with compacted hardfill.

Maximum Spacing of Free Joints (m) - as per CCANZ guidelines			
Steel	100mm Slab	120/125mm Slab	150mm Slab
665	26	21	17
663	37	30	25
661			35

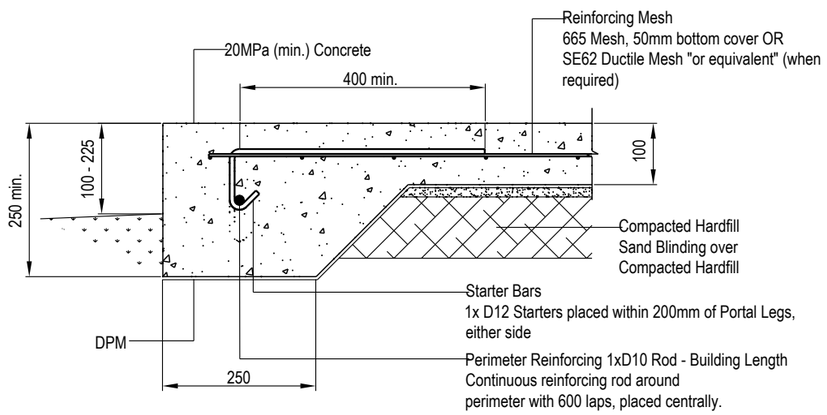

1 - **100MM FOUNDATION (CENTRAL REINFORCING)**
SCALE 1:10

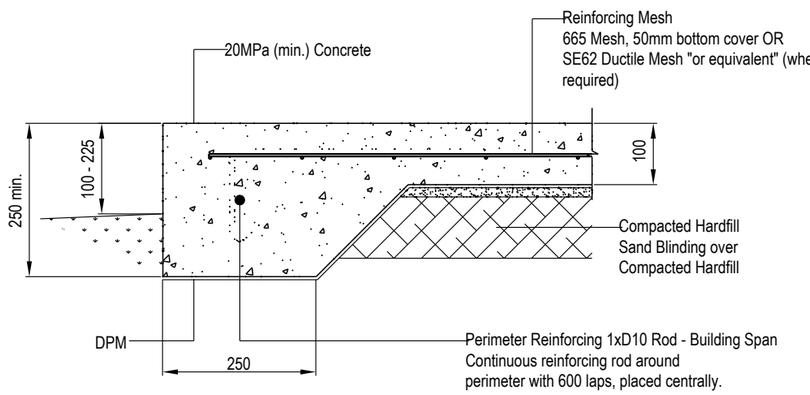

2 - **100MM FOUNDATION (CENTRAL REINFORCING)**
SCALE 1:10

TOTALSPAN®
STEEL BUILDINGS

Project Ref: JH.309

© Copyright 2017 Spanbild NZ Ltd. All rights reserved.

Don Campbell
7 Swindon Lane
Amberley
7410
021 1521186

Gable Range - Design

Foundation Details SD-F02

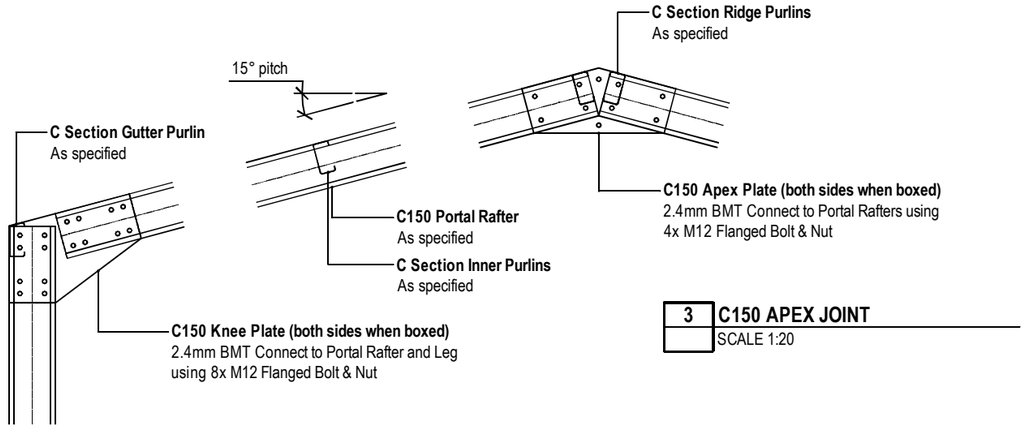

3 C150 APEX JOINT
SCALE 1:20

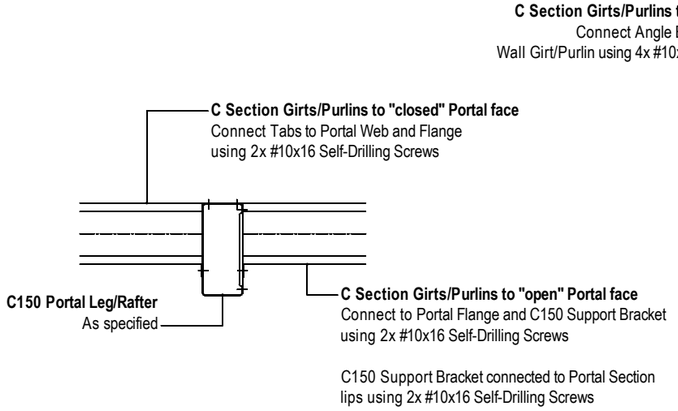

6 GIRT/PURLIN TABBED CONNECTION
SCALE 1:10

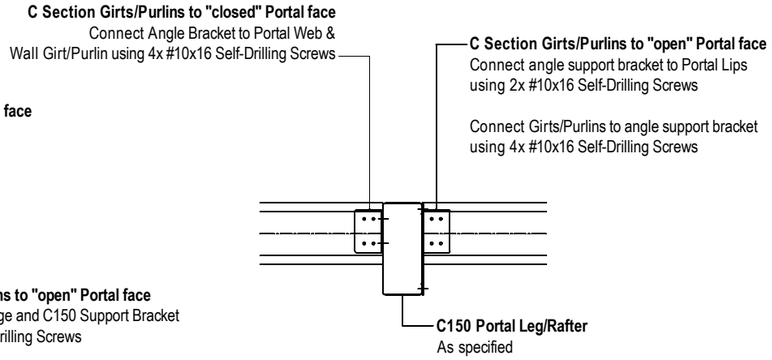

7 GIRT/PURLIN BRACKET CONNECTION
SCALE 1:10

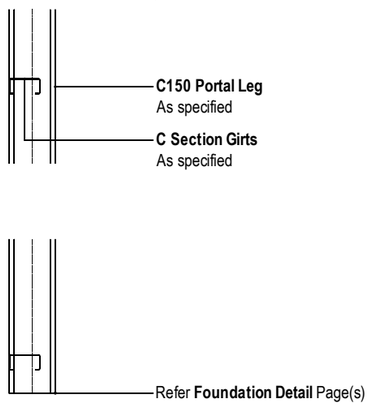

2 C150 KNEE JOINT
SCALE 1:20

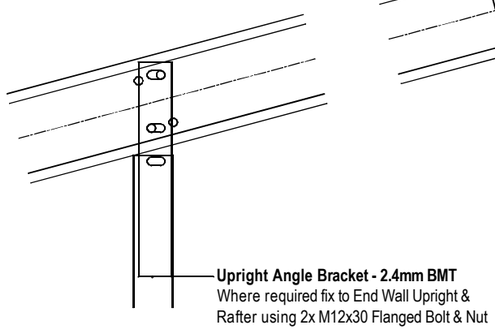

5 UPRIGHT TO RAFTER CONNECTION
SCALE 1:10

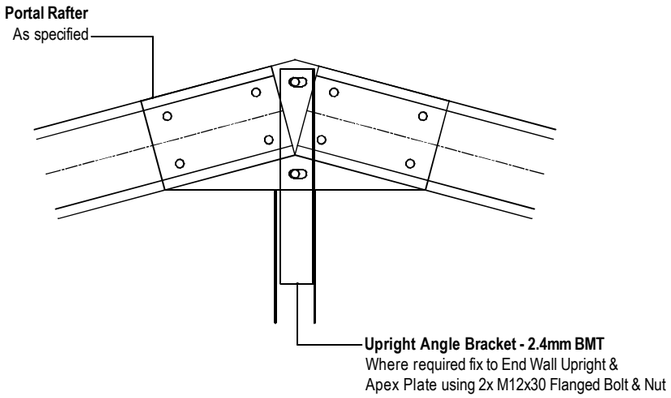

4 UPRIGHT TO APEX CONNECTION
SCALE 1:10

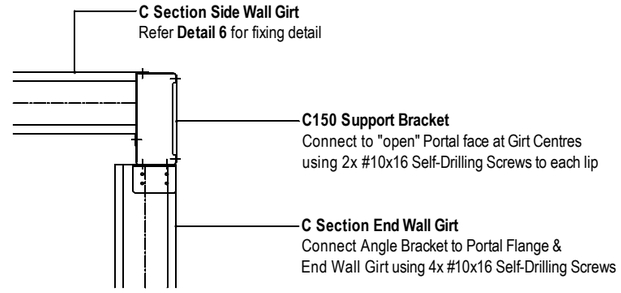

8 END WALL GIRT CONNECTION
SCALE 1:10

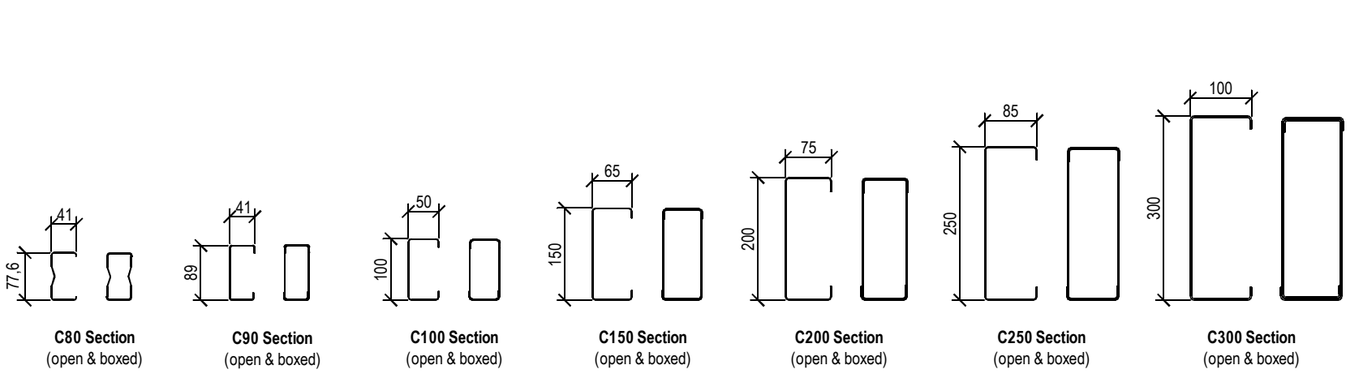

- C SECTION PROFILES (INCL. BOXING)
SCALE 1:20

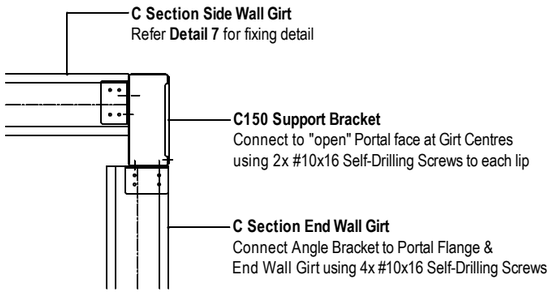

9 END WALL GIRT CONNECTION
SCALE 1:10

TOTALSPAN®
STEEL BUILDINGS

Project Ref: JH.309

© Copyright 2017 Spanbild NZ Ltd. All rights reserved.

Don Campbell
7 Swindon Lane
Amberley
7410
021 1521186

Gable Range - Design

Frame Details SD-P01

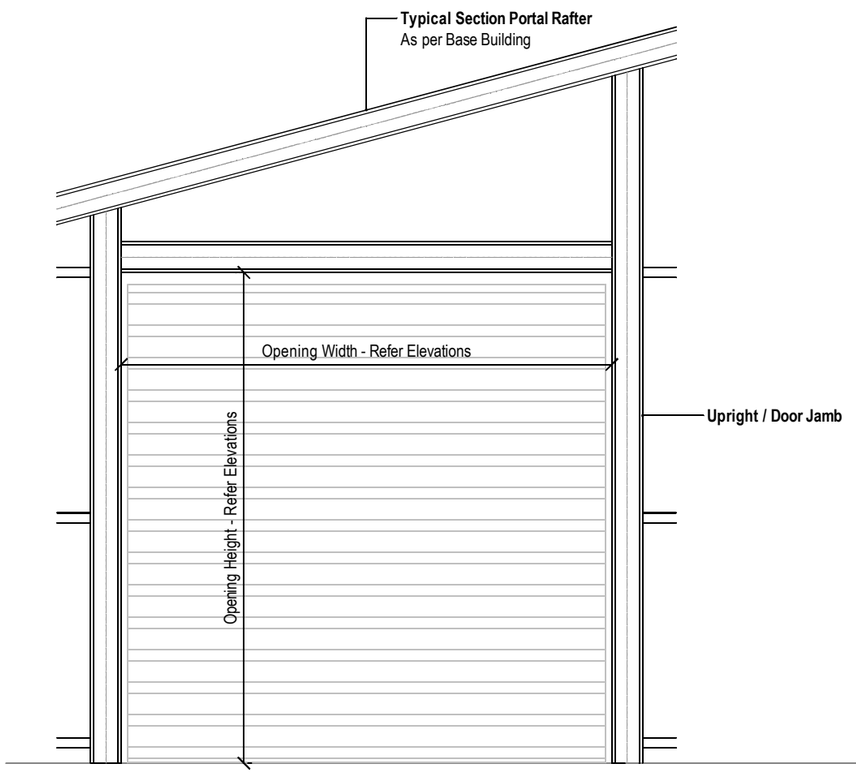

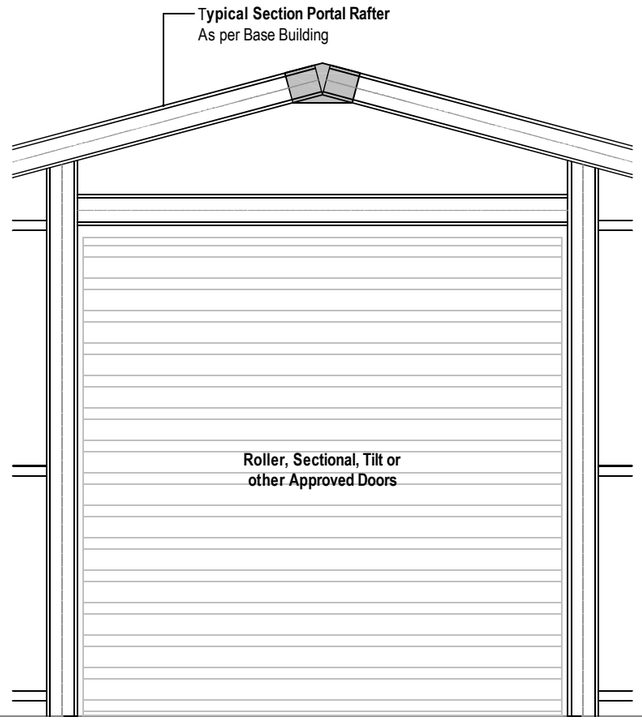

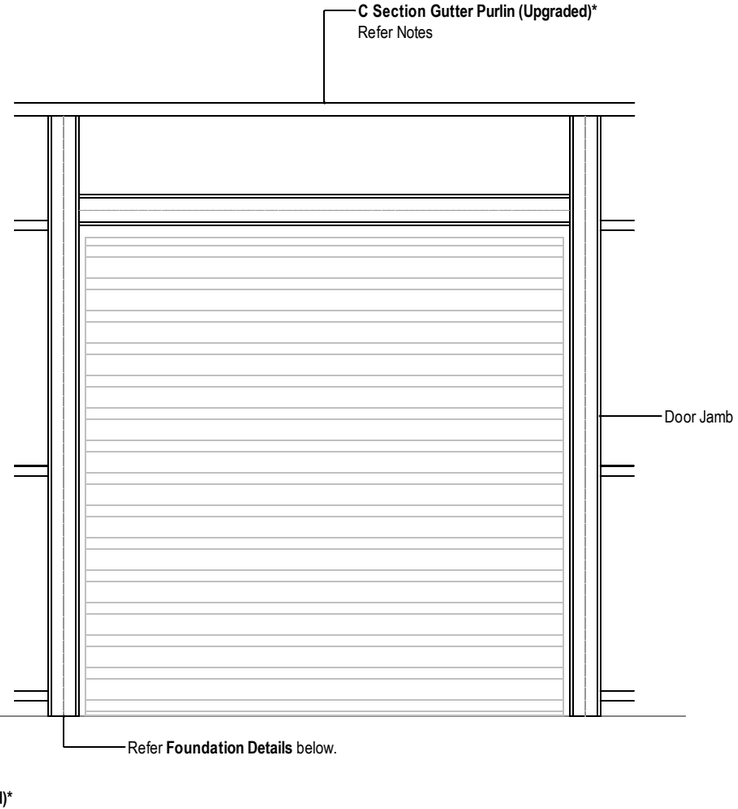

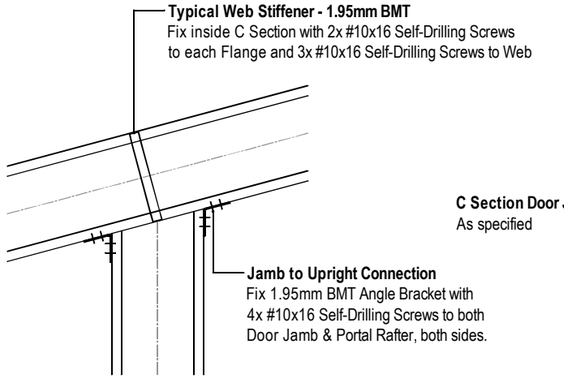

- **DOOR JAMB/UPRIGHT TO RAFTER CONNECTION**
  SCALE 1:10

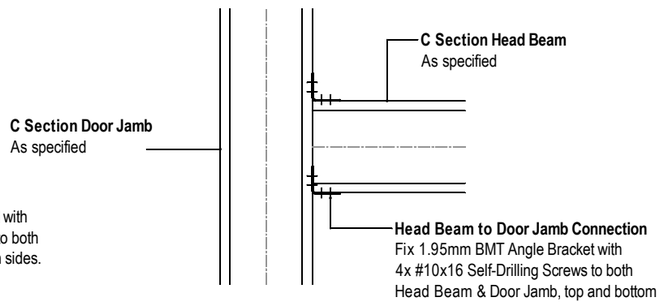

- **HEAD BEAM TO DOOR JAMB CONNECTION**
  SCALE 1:10

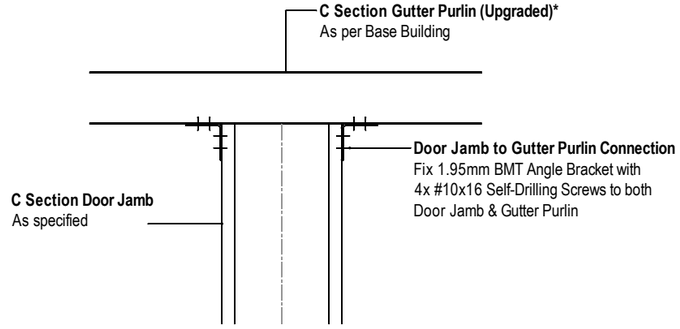

- **HEAD BEAM TO GUTTER PURLIN CONNECTION**
  SCALE 1:10

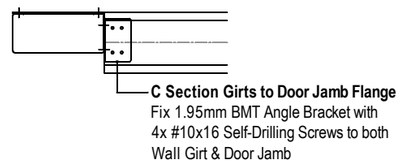

- **GIRT TO DOOR JAMB CONNECTION**
  SCALE 1:10

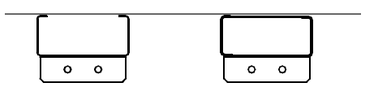

C150 Section Door Jambs
(open or boxed options)

- **C150 Jamb to Foundation Connections**
  SCALE 1:10

TOTALSPAN®
STEEL BUILDINGS

Project Ref: JH.309

© Copyright 2017 Spanbild NZ Ltd. All rights reserved.

Don Campbell
7 Swindon Lane
Amberley
7410
021 1521186

Gable Range - Design

Major Openings SD-M01

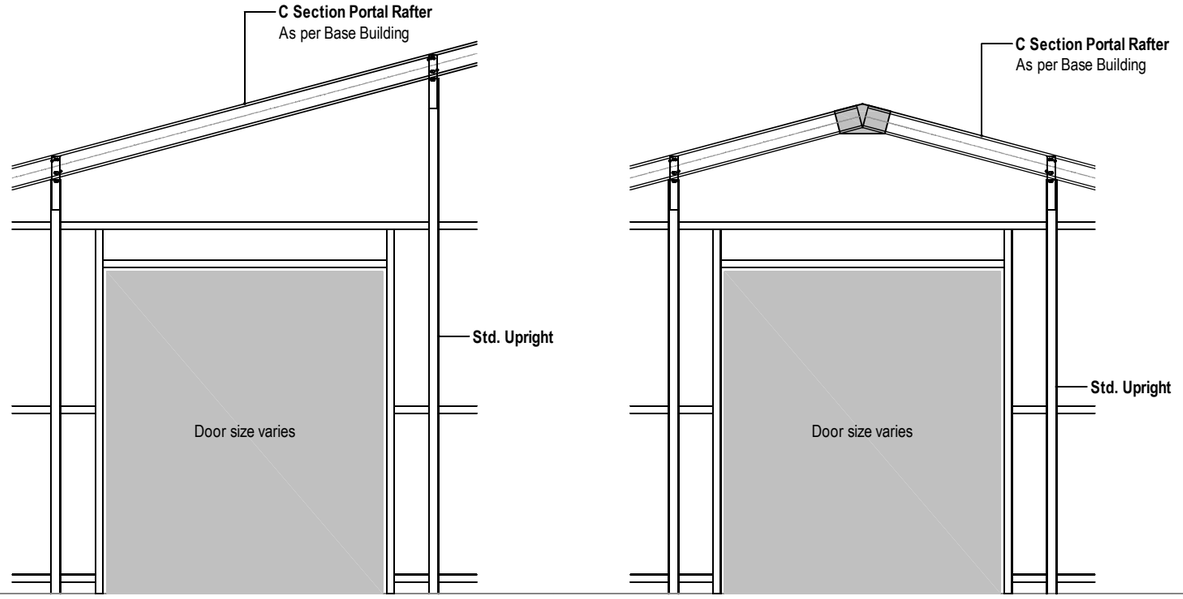

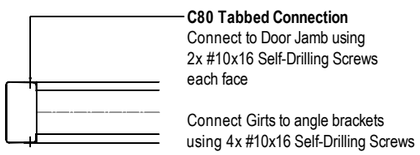

- C SECTION TABBED CONNECTION
SCALE 1:10

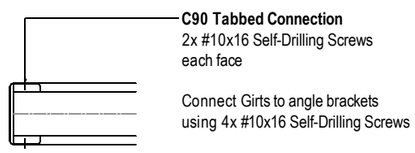

- C SECTION NOTCHED CONNECTION
SCALE 1:10

TOTALSPAN®
STEEL BUILDINGS

Project Ref: JH.309

© Copyright 2017 Spanbild NZ Ltd. All rights reserved.

Don Campbell
7 Swindon Lane
Amberley
7410
021 1521186

Gable Range - Design

Minor Door Openings SD-M05

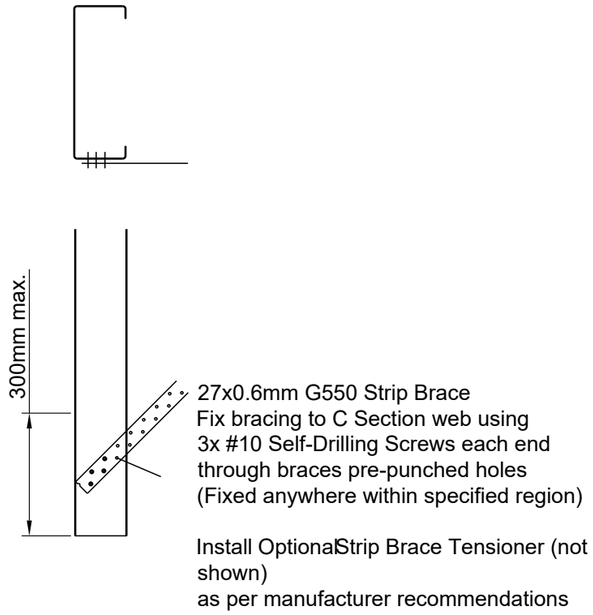

- SINGLE STRIP BRACE FIXING
SCALE 1:10

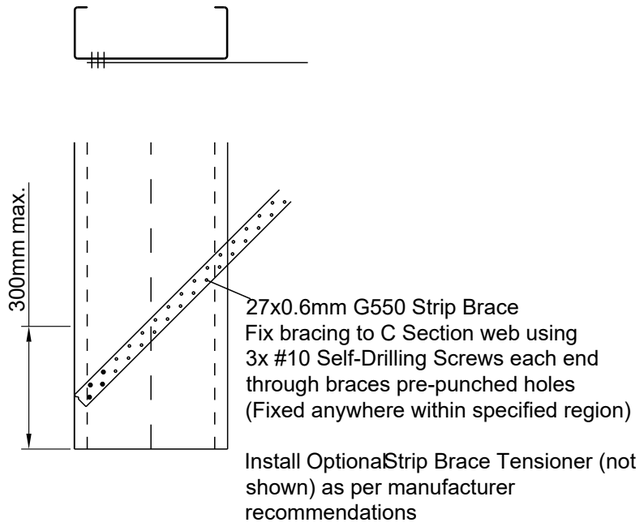

- SINGLE STRIP BRACE FIXING
SCALE 1:10

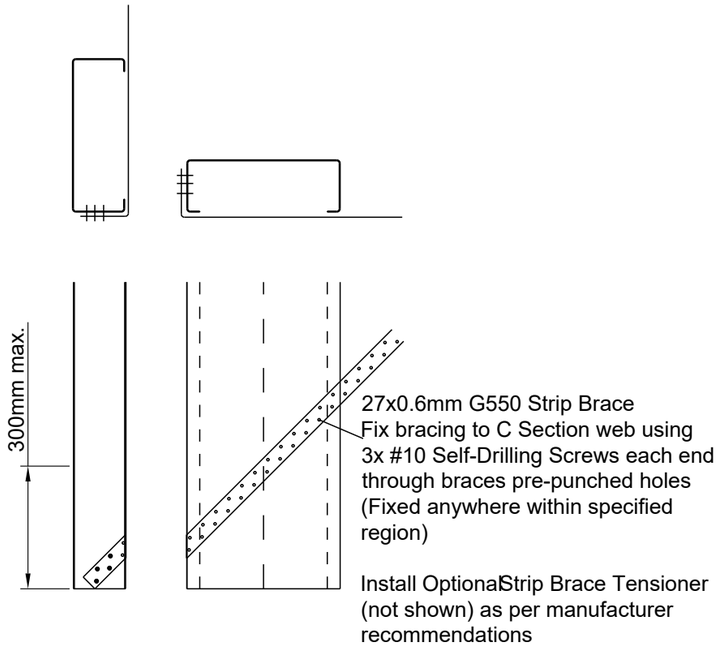

- SINGLE STRIP BRACE FIXING
SCALE 1:10

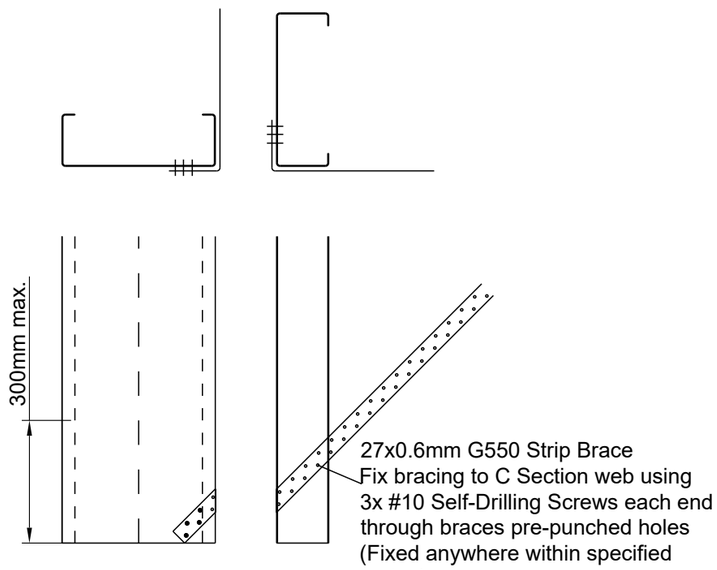

- SINGLE STRIP BRACE FIXING
SCALE 1:10

TOTALSPAN®
STEEL BUILDINGS

Project Ref: JH.309

© Copyright 2017 Spanbild NZ Ltd. All rights reserved.

Don Campbell
7 Swindon Lane
Amberley
7410
021 1521186

Gable Range - Design

Bracing Details

Sheet 17 of 19

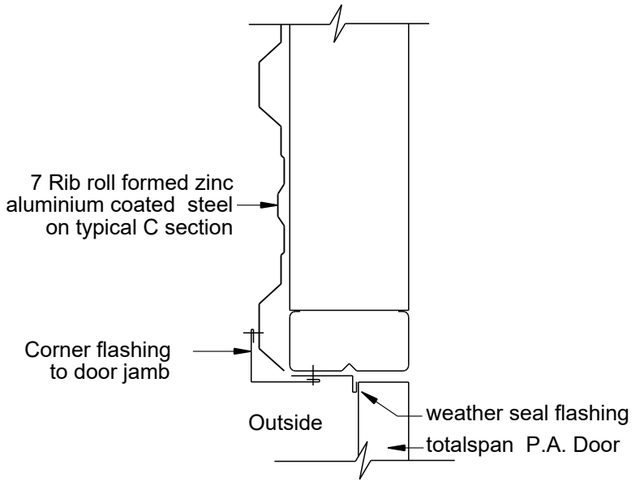

- **P.A. Door Jamb Detail**
SCALE: NTS

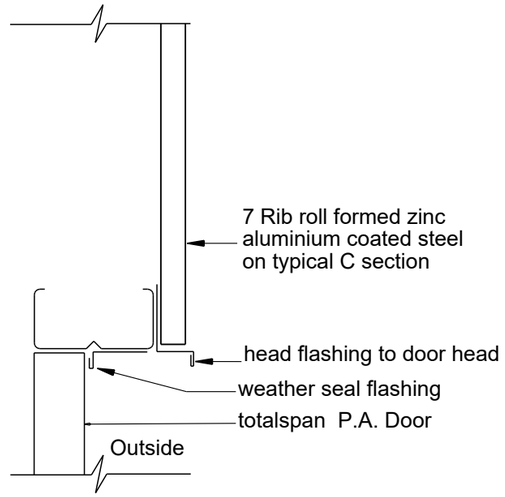

- **P.A. Door Head Detail**
SCALE: NTS

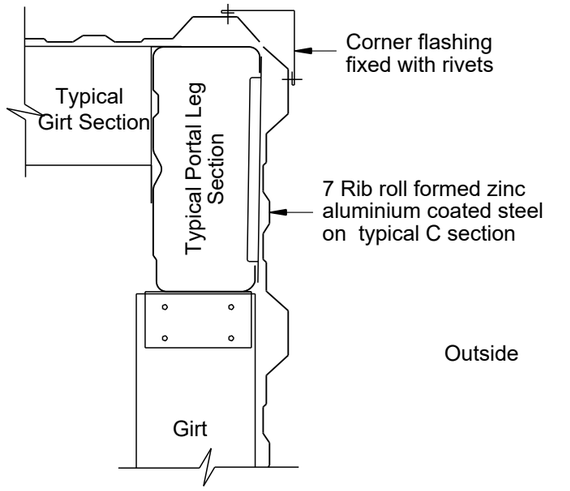

- **External Corner**
SCALE: NTS

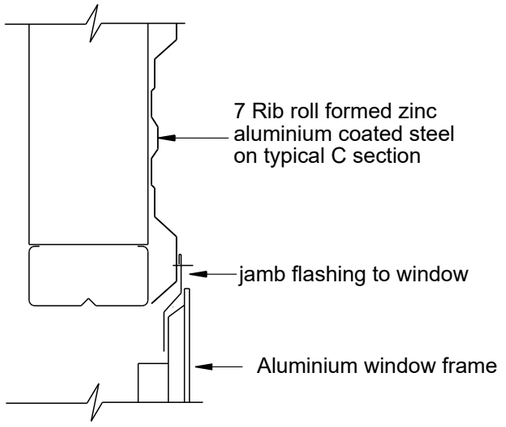

- **Window Jamb Detail**
SCALE: NTS

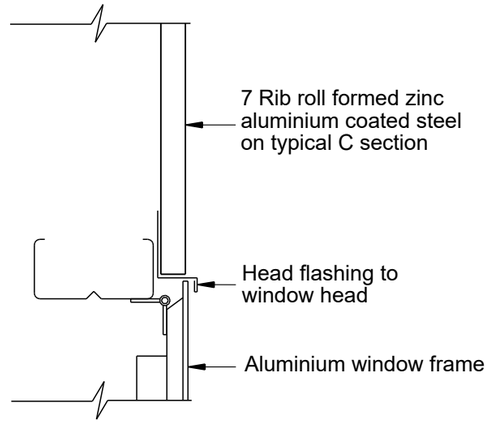

- **Window Head Detail**
SCALE: NTS

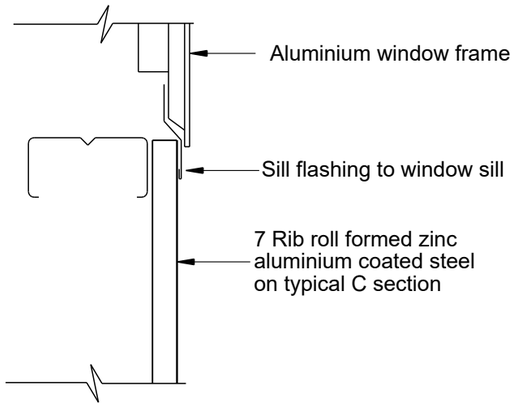

- **Window Sill Detail**
SCALE: NTS

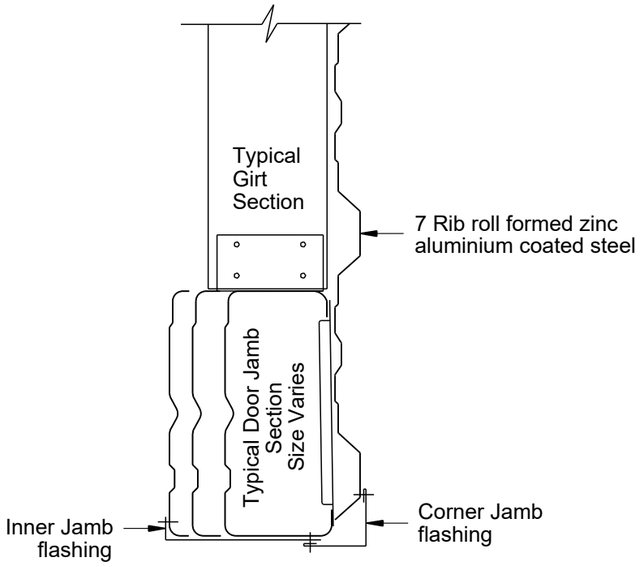

- **Main Access Door Jamb Detail**
SCALE: NTS

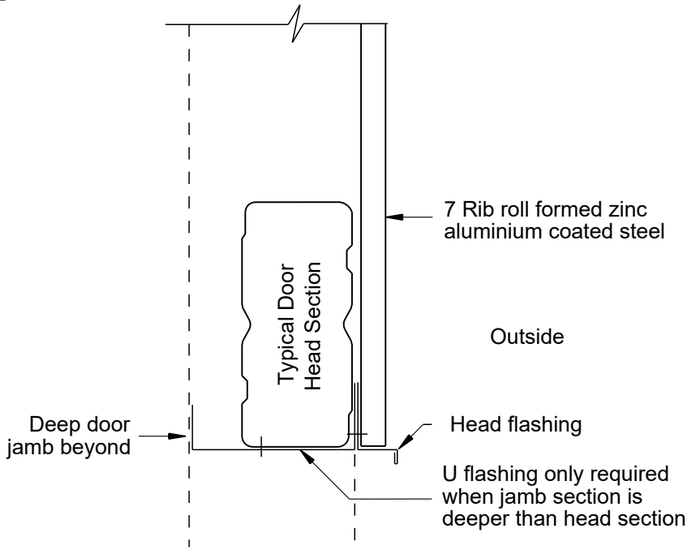

- **Main Access Door Head Detail**
SCALE: NTS

TOTALSPAN®
STEEL BUILDINGS

Project Ref: JH.309

© Copyright 2017 Spanbild NZ Ltd. All rights reserved.

Don Campbell
7 Swindon Lane
Amberley
7410
021 1521186

Gable Range

Flashing Details

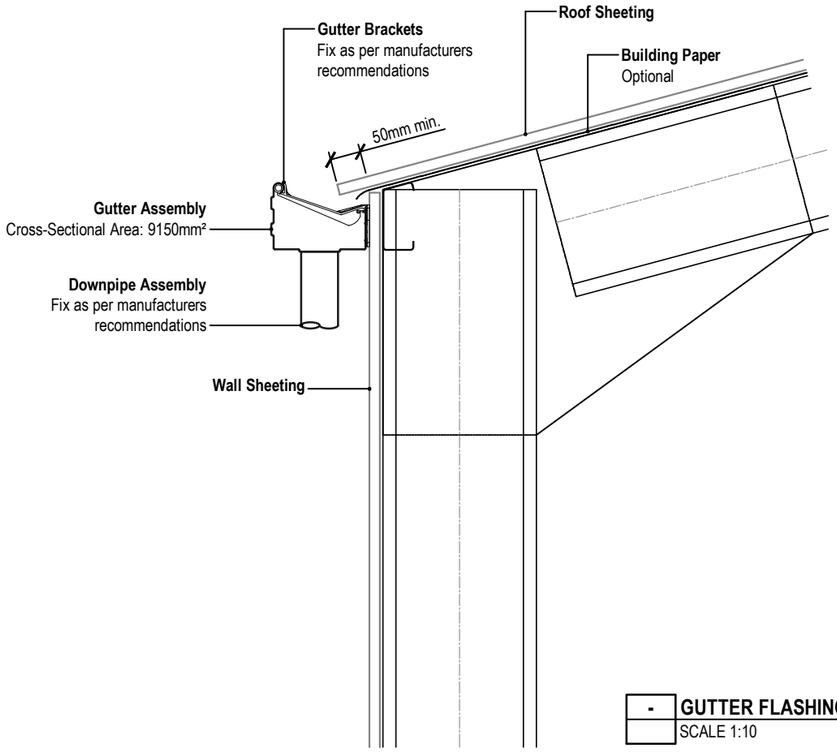

- **GUTTER FLASHING DETAIL**
SCALE 1:10

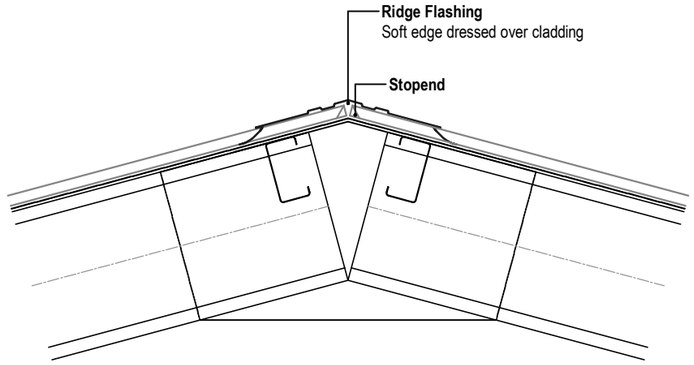

- **RIDGE FLASHING DETAIL**
SCALE 1:10

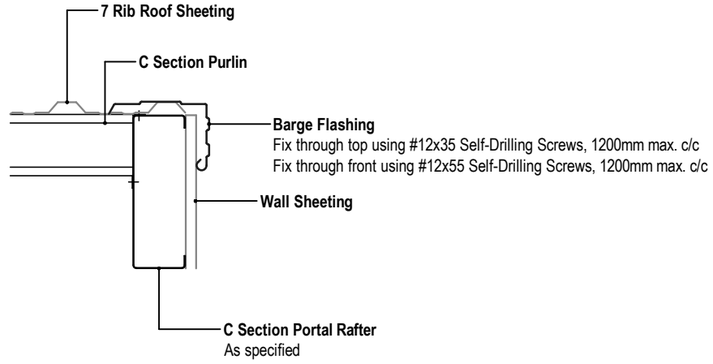

- **BARGE FLASHING DETAIL**
SCALE 1:10

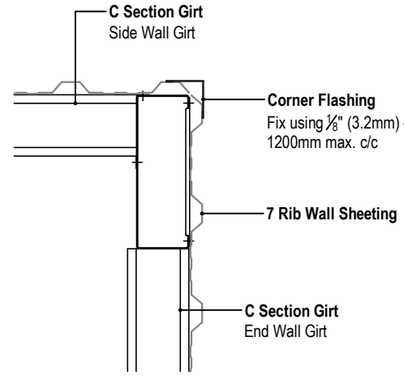

- **CORNER FLASHING DETAIL**
SCALE 1:10

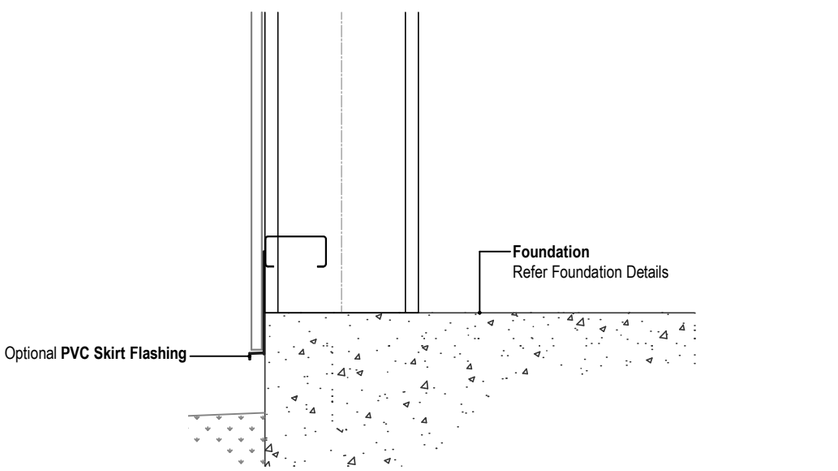

- **SKIRT FLASHING DETAIL**
SCALE 1:10

Important Design Notes

1. Roof and Wall Sheeting shall be 0.35 - 0.55 B.M.T, AZ150 Coating, G550 Steel only. Alternative claddings (excluding light-weight translucent panel i.e. Ampelite), require an independent specific design certificate for the scope of work.
2. Wall Cladding to have minimum 50mm cover and 40mm min. clearance to ground level
3. Fixing pattern as per E2/AS1 or NZ MRM - NZ Metal Roof and Wall Cladding Code of Practice.
4. Flashings shall be fixed as per manufacturers recommendations.
5. Additional options may include:
   - 5.1. Snow straps for gutters
   - 5.2. Gutter purlin flashing
   - 5.3. Building paper in walls

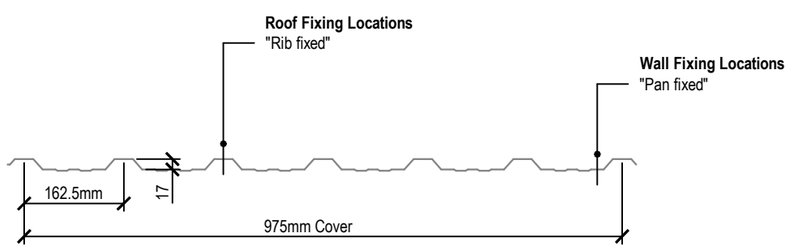

- **7 RIB CLADDING PROFILE**
SCALE 1:10

TOTALSPAN®
STEEL BUILDINGS

Project Ref: JH.309

© Copyright 2017 Spanbild NZ Ltd. All rights reserved.

Don Campbell
7 Swindon Lane
Amberley
7410
021 1521186

Gable Range

Flashing Detail SD-E01

HDC Approved Consent Document (In accordance with BA 2004, Sec. 49(1)) - Processed by : Carl Sherwood - BC No. 250126

canterbury maps

Canterbury Maps

Information has been derived from various organisations including Environment Canterbury and the Canterbury Maps partners. Boundary information is derived under licence from LINZ Digital Cadastral Database (Crown Copyright Reserved). Environment Canterbury and the Canterbury Maps partners do not give and expressly disclaim any warranty as to the accuracy or completeness of the information or its fitness for any purpose.

Information from this map may not be used for the purposes of any legal disputes. The user should independently verify the accuracy of any information before taking any action in reliance upon it.

N

0 0 0 0 0 Kilometres

Scale: 1:100 @A3

Map Created by Canterbury Maps on 15/04/2025 at 1:55 PM



HDC Approved Consent Document (In accordance with BA 2004, Sec. 49(1)) - Processed by : Carl Sherwood - BC No. 250126

TOTALSPAN®
STEEL BUILDINGS
WHO CAN? TOTALSPAN!

Gable Range
Producer Statement and Structural Details
(IL1 Non-Habitable, Unlined)

INDEX:

1	Contents
2	Producer Statement
3	Specifications
4	Durability Statement
5	Site Plan
6-11	Engineering Tables
12	Foundation Details SD-F01
13	Foundation Details SD-F02
14	Frame Details SD-P01
15	Major Openings SD-M01
16	Minor Door Openings SD-M05
17	Bracing Details
18	Flashing Details
19	Flashing Detail SD-E01

CLIENT:

Don Campbell
7 Swindon Lane
Amberley
CAN
7410

BUILDING:

System Ref Code:	JH.309 (v3.3.2.15)
Location:	Lat: -43.146309 Lng: 172.730994
Wind Speed: Vdes Θ:	34.22 m/s
Snow Loading:	Sg = 0.9 kPa
Span:	4.000m
Length:	7.000m
Knee Height:	2.400m
Bay Size:	2x3.500m
Roof Pitch:	15°
Roofing Sheet:	7-Rib 0.35mm
Cladding Sheet:	7-Rib 0.35mm
Downpipe Type:	80mm Coloursteel
Floor Type:	Concrete Slab
Area:	Total 28.0m²

NOTES :

1 - Contractor to confirm all dimensions on site at time of construction
2 - These drawings must not be reproduced without express permission from Spanbild New Zealand Limited.

TOTALSPAN
A Division of Spanbild New Zealand Ltd
112 Waterloo Road, Hornby
P.O.Box 11-013, Christchurch Details

SPANBILD
DESIGN. MANUFACTURE. BUILD.

HDC Approved Consent Document (In accordance with BA 2004, Sec. 49(1)) - Processed by : Carl Sherwood - BC No. 250126

PRODUCER STATEMENT – PS1
DESIGN

BUILDING CODE CLAUSE(S): B1 **JOB NUMBER:** JH.309
ISSUED BY: Spanbild NZ Ltd
(Engineering Design Firm)
TO: Totalspan North Canterbury
(Owner/Developer)
TO BE SUPPLIED TO: Hurunui District Council
(Building Consent Authority)
IN RESPECT OF: 4.000m span x 7.000m length; IL1 portal building; DL=50yrs
(Description of Building Work)
AT: 7 Swindon Lane, Amberley, 7410, CAN
(Address, Town/City)
LEGAL DESCRIPTION: **N/A**

We have been engaged by the owner/developer referred to above to provide *(Extent of Engagement)*:
Structural Design as shown on sheets 1, 2, 5-16
in respect of the requirements of the Clause(s) of the Building Code specified above for all, as specified in the Schedule, of the proposed building work.

The design carried out by us has been prepared in accordance with:

- ✔Compliance documents issued by the Ministry of Business, Innovation & Employment *(Verification method/acceptable solution)* B1/VM1, B1/VM4 and/or;
- Alternative solution as per the attached Schedule.

The proposed building work covered by this producer statement is described on the drawings specified in the Schedule, together with the specification, and other documents set out in the Schedule.

On behalf of the Engineering Design Firm, and subject to:

- Site verification of the following design assumptions:
- All proprietary products meeting their performance specification requirements;

I believe on reasonable grounds that:

- the building, if constructed in accordance with the drawings, specifications, and other documents provided or listed in the Schedule, will comply with the relevant provisions of the Building Code and that;
- the persons who have undertaken the design have the necessary competency to do so.

~~I recommend the **N/A** level of **construction monitoring.**~~

I, *(Name of Engineering Design Professional)* Ryan Moreau , am:

- ✔CPEng number 1013731

and hold the following qualifications BE(Hon), CPEng, CMEngNZ

The Engineering Design Firm holds a current policy of Professional Indemnity Insurance no less than $200,000
The Engineering Design Firm is a member of ACE New Zealand.

SIGNED BY *(Name of Engineering Design Professional)*: Ryan Moreau

ON BEHALF OF *(Engineering Design Firm)*: Spanbild NZ Ltd Date:14-04-2025

Note: This statement has been prepared solely for the Building Consent Authority named above and shall not be relied upon by any other person or entity. Any liability in relation to this statement accrues to the Engineering Design Firm only. As a condition of reliance on this statement, the Building Consent Authority accepts that the total maximum amount of liability of any kind arising from this statement and all other statements provided to the Building Consent Authority in relation to this building work, whether in tort or otherwise, is limited to the sum of $200,000.

This form is to accompany **Form 2 of the Building (Forms) Regulations 2004** for the application of a Building Consent.

SCHEDULE TO PS1

The proposed building work covered by this producer statement is described on the drawings with project reference and sheet numbers on the PS1

The specifications, durability statement and maintenance requirements are set out in the drawings.

Alternative Solutions apply for areas that the potential for liquefaction or lateral spread has been identified as it is outside B1/VM4. The alternative solutions are MBIE guidance documents "Planning and engineering guidance for potentially liquefaction prone land" and "Repairing and re-building houses affected by the Canterbury Earthquakes"

The foundations require suitable soils. This IL1 foundation (generally unlined) has been designed for;

- Geotechnical Ultimate Bearing Capacity of 225 kPa,
- Where there is no potential for liquefaction or lateral spread or
- Liquefaction Vulnerability where liquefaction damage is unlikely (very low or low liquefaction vulnerability),
- Non-expansive soils.

- Indications of local instability,
- Foundations closer than 3 x height of a bank plus 0.6 m measured from the foot of the bank, and the length of the flat at the base of the bank is a minimum of 4 times the height of the bank,
- Slope steeper than 5 degrees away from the building platform.
- Buried organic topsoil, peat, soft clays, buried services or expansive clays, any fill that does not have a certificate of suitability issued in accordance with NZS 4431

TOTALSPAN®
STEEL BUILDINGS

Project Ref: JH.309

© Copyright 2017 Spanbild NZ Ltd. All rights reserved.

Don Campbell
7 Swindon Lane
Amberley
7410
021 1521186

Gable Range - Design

Producer Statement

HDC Approved Consent Document (In accordance with BA 2004, Sec. 49(1)) - Processed by : Carl Sherwood - BC No. 250126

SPECIFICATIONS

GENERAL NOTES

1. IMPORTANT DESIGN LIMITATIONS

1.1. Design limitations apply to any item or alteration not specifically stated or clearly represented within the scope of these engineering specifications. This is a CAD drawing which must not be altered by manual methods, exceptions to this are:

1.1.1. The documentation clearly states where "generic" items can be crossed out, or the applicable detail circled to provide clarity.

1.1.2. Additional specific design has been carried out by a CPENG engineer with a PS1 supplied covering "part" design works for any ammedment/alterations. Alternative/Additional drawings shall be supplied or these specifications must be clearly marked up in red pen and accompanied by the PS1 engineer's signature on each drawing altered which is covered by the additional specific design, as above.

1.1.3. A letter has been supplied in writing, signed by the original engineer(s) covering "minor" ammedments/alterations or clarifications to varying interpretations of the design drawings.

1.2. Habitable/Lined Buildings are not covered within this scope of work.

2. GENERAL

2.1. All work shall conform to the New Zealand Building Code

2.2. B2 Durability shall be covered by respective product/manufacturers durability statements

3. LOADINGS

3.1. Buildings are designed to AS/NZS 1170

3.1.1. Refer Schedule for Windspeed, Vdesθ in m/s.

3.1.2. Refer Schedule for Ground Snow Load if applicable in kPa.

3.1.3. The roofing is not designed for point loads of 1.1kN, these are Surfaces (including transparent surface) over which supports (e.g., boards or ladders) are required to be laid to support actions incidental to maintenance (e.g., people).

3.1.4. Earthquake loads, except for "near fault" locations due to the light-weight structure are not critical for unlined, Importance Level 1 & 2 standard structures with cladding as specified below only.

3.1.5. Habitable/Lined or Importance Level 3 and greater structures require specific design engineering in addition to this specification covering the scope of works. (Importance Level 2 structures have been designed to resist "structural damage" deflections only).

3.1.6. Any loads exceeding the above shall require specific design engineering in addition to this specification covering the scope of works.

4. FOUNDATIONS

4.1. Ground shall have a safe bearing capacity of at least 75kPa (225kPa Ultimate).

4.1.1. This is achieved by meeting "good ground", safe bearing capacity of at least 100kPa in accordance with NZS 3604 (i.e. exceeds the above) OR;

4.1.2. Safe bearing capacity of at least 75kPa by Site Specific Geo-Technical Report (as NZS 3604 has no means of determining a minimum safe bearing of 75kPa).

5. CONCRETE

5.1. Designed to NZS 3101

5.2. Remove vegetation and loose material from the building footprint, backfill with compacted hard-fill if required and lay sand blinding to the underside of the concrete slab. Ensure the surface of the slab will be at least 100mm above the highest level of cleared ground around the slab.

5.3. Concrete shall have a maximum aggregate size of 20mm and minimum 20MPa compression strength at 28 days.

5.4. Refer Foundation Details for further details.

5.5. Lesser Ductile Mesh is allowed to be used for Importance Level 1 structures only

5.5.1. Refer NZS 3101 Clause 5.3.2.7 (a)

6. STEELWORK & COMPONENTS

6.1. Boxed Sections

6.1.1. Shall be fixed through flange centres within 100mm from the end and at @ 600mm centres max. (+50mm tolerance) using #10 Self-Drilling Screws. Excludes exterior flanges of Girts & Purlins (as cladding teks provide fastening).

6.2. All Steelwork & Components shall (where applicable) conform to:

6.2.1. AS/NZS 4600 - Cold-formed steel structures

6.2.2. AS/NZS 1252 - High strength steel bolts with associated nuts and ...

6.2.3. AS/NZS 1365 - Tolerances for flat-rolled steel products

6.2.4. AS/NZS 4505:2013 - Garage doors and other large access doors

6.2.5. AS 1110 - ISO metric hexagon bolts and screws

6.2.6. AS 1112 - ISO metric hexagon nuts...

6.2.7. AS 1397 - Continuous hot-dip metallic coated steel sheet and strip

6.2.8. AS 1580 - Paints and related materials - Methods of test

6.2.9. AS 3566 - Self-drilling screws for the building and construction industries

6.2.10. AS 4291.1 - Mechanical properties of fasteners made of carbon steel and ...

6.2.11. IFI-114(Imperial) / IFI-505(Metric) - Break Mandrel Blind Rivets

7. CLADDING

7.1. Roof and Wall Sheeting shall be 0.35 - 0.55 B.M.T, AZ150 Coating, G550 Steel only. Alternative claddings (excluding glass reinforced panel), require an independent specific design certificate for the scope of work.

7.2. Fixing pattern as per E2/AS1 or NZ MRM - NZ Metal Roof and Wall Cladding Code of Practice.

7.3. Flashings shall be fixed as per manufacturers recommendations/instructions.

8. SERVICES

8.1. Penetrations through framing members

8.1.1. Typical hole diameter(s) shall not exceed 29mm (1 ⅛ inch)

8.1.1.1. A single 44mm (1 ¾ inch) hole per C150, C250 or C300 section only is allowed to accommodate an up to 40mm waste water pipe

8.1.2. Distance between holes along the section shall be no less than 1000mm

8.1.3. Holes shall be located:

8.1.3.1. Central in the web, (within the centre 1/3 of the web depth)

8.1.3.2. At least 200mm from the end of a member

8.1.4. Rubber grommets to be applied to un-swaged service holes

8.1.5. Larger and more frequently spaced holes are allowed, however please consult with an engineer first for written approval to ensure compliance with AS/NZS 4600.

TOTALSPAN®
STEEL BUILDINGS

Project Ref: JH.309

© Copyright 2017 Spanbild NZ Ltd. All rights reserved.

Don Campbell
7 Swindon Lane
Amberley
7410
021 1521186

Gable Range - Design

Specifications

HDC Approved Consent Document (In accordance with BA 2004, Sec. 49(1)) - Processed by : Carl Sherwood - BC No. 250126

MANUFACTURERS STATEMENT - DURABILITY

Cladding

To satisfy the requirements of Clause B2:"Durability" of the NZBC and to ensure the cladding material meets a 15-year durability life and a 50 year intended working life (design life), the following requirements must be followed:

Cladding Range of Product and Use

- Coating Type: Zinc/Aluminium & Painted (Coloured Steel).
- Steel thickness range: 0.35mm - 0.55mm BMT
- Steel grade range: G300 - G550
- Application: Standard Totalspan Roof and Wall Cladding
- Profile: Totalspan 7 Rib, Totalspan 6 Rib, Totalspan Corrugate

Requirements

- Fixing and installation of the cladding must be done exactly in accordance with the manufacturer's instructions and specifications.
- Normal maintenance must be regularly carried out on the exterior surface of the cladding and visible internal surfaces of the cladding.The following guide must be followed to ensure the durability requirements are met.

Normal Maintenance

- Normal Maintenance to be completed in accordance with Durability - Acceptable Solution B2/AS 2.1.3
- Corrosion Zones C1 and C2 (Reference SNZ TS 3404:2018, Durability requirements for steel structures and components, corrosivity zone maps, Figure 1 – 7, page 10 – 16)

  Rain-washing only required on exposed (open to airborne salts and rain wetting) material. Sheltered (open to airborne salts, but not rain washed) or protected areas such as under spouting, top-cladding sheets and tops of doors and underside of Awnings and Garaports require washing every 3 months.

- Corrosion Zones C3 and C4 (Reference SNZ TS 3404:2018, Durability requirements for steel structures and components, corrosivity zone maps, Figure 1 – 7, page 10 – 16)

  Rain-washing only required on exposed (open to airborne salts and rain wetting) areas. Sheltered (open to airborne salts, but not rain washed) and protected areas such as under spouting, top cladding and tops of doors and underside of Awnings and Garaports require washing down every month and whenever corrosive salts are present.

Extended Maintenance, Painting or Repainting

Extended Durability

Once the metallic coating or the paint system has weathered away, signs of red rust for bare material or signs of the metallic coating for painted material, painting of the entire surface is required to extend the life of the cladding product. Paint manufacturers recommendations are to be followed for surface preparation and paint type to be used.

Evident Corrosion

- Areas that show signs of white or red rust/corrosion (typically in unwashed areas) require cleaning back with a stiff brush and cleaner to remove all dust, surface contaminants and corrosion products and present a sound substrate for painting. Priming of the surface and application of two coats of paint as per the Paint Manufacturer's recommendations is then required.
- Particular attention needs to be paid to laps (side, end, flashing etc) where earlier corrosion may start due to moisture and dirt entrapment.

  If evident corrosion is not treated quickly rapid deterioration of the sheet may occur which could result in perforation. At this stage replacement of the affected sheet is the best option.

Steel Framing

To satisfy the requirements of Clause B2:"Durability" of the NZBC and to ensure the structural framing material meets a 25-year durability for carports and a 50-year durability for all other buildings, the following requirements must be followed:

Steęl Framing Range of Product and Use

- Coating Type: Galvanised
- Steel thickness range: 0.55mm – 3.0mm BMT
- Steel grade range: G300 – G550
- Application: Standard Totalspan Purlins, Girts, Portal Frames, Door Jambs, Wall Uprights, Bridging, Posts

Profile:
C Sections – C80 to C300
Z Sections – 100x53, 150x65
Tophat Sections – 100x163, 120x170, 150x183
Square Hollow Sections - 65x65, 75x75

Requirements

- Regular inspections of the steel work and maintenance at the first signs of a problem will extend the durability of the sections.
  Where sections are exposed (open to airborne salts and rain wetting) or sheltered (open to airborne salts but not rain washed), or located in salt marine, corrosive industrial or unusually high corrosive enviromentsthe below Normal Maintenance must be adhered to. Please contact your local Totalspan branch for specialist advice if unsure requirements.
  This also applies to all Steelwork that is exposed to the wind but is protected from the rain located in an open sided structure such as carports, awnings or structures closed in on one side only.
  Maintenance is necessary when the Galvanised coating ceases to provide sacrificial protection to the steel base, or where the appearance is no longer aesthetically acceptable. At the first sign of corrosion or rust staining, the surface should be treated and painted with an appropriate coating system. All maintenance should be carried out in accordance with AS/NZS 2312:2002 (Incorporating Amendment No. 1) [c] and New Zealand Steelwork Corrosion Coatings Guide (HERA Report R4-133) [d].

Normal Maintenance

- Normal Maintenance to be completed in accordance with Durability - Acceptable Solution B2/AS 2.1.3

-Corrosion Zones C1 and C2 (Reference SNZ TS 3404:2018, Durability requirements for steel structures and components, corrosivity zone maps, Figure 1 – 7, page 10 – 16)

Rain-washing only required on exposed (open to airborne salts and rain wetting) sections.
Sheltered (open to airborne salts, but not rain washed) sections require washing every 3 months. All other materials should be inspected at the time of washing and if required, cleaned of any contaminants.

-Corrosion Zones C3 and C4 (Reference SNZ TS 3404:2018, Durability requirements for steel structures and components, corrosivity zone maps, Figure 1 – 7, page 10 – 16)

Rain-washing only required on exposed (open to airborne salts and rain wetting) sections
Sheltered (open to airborne salts, but not rain washed) sections require washing down every month and whenever corrosive salts are present. All other materials should be inspected at the time of washing and if required, cleaned of any contaminants.

Manufacturer:

Spanbild New Zealand Limited
112 Waterloo Rd
Sockburn
CHRISTCHURCH

TOTALSPAN®
STEEL BUILDINGS

Project Ref: JH.309

© Copyright 2017 Spanbild NZ Ltd. All rights reserved.

Don Campbell
7 Swindon Lane
Amberley
7410
021 1521186

Gable Range

Durability Statement

HDC Approved Consent Document (In accordance with BA 2004, Sec. 49(1)) - Processed by : Carl Sherwood - BC No. 250126

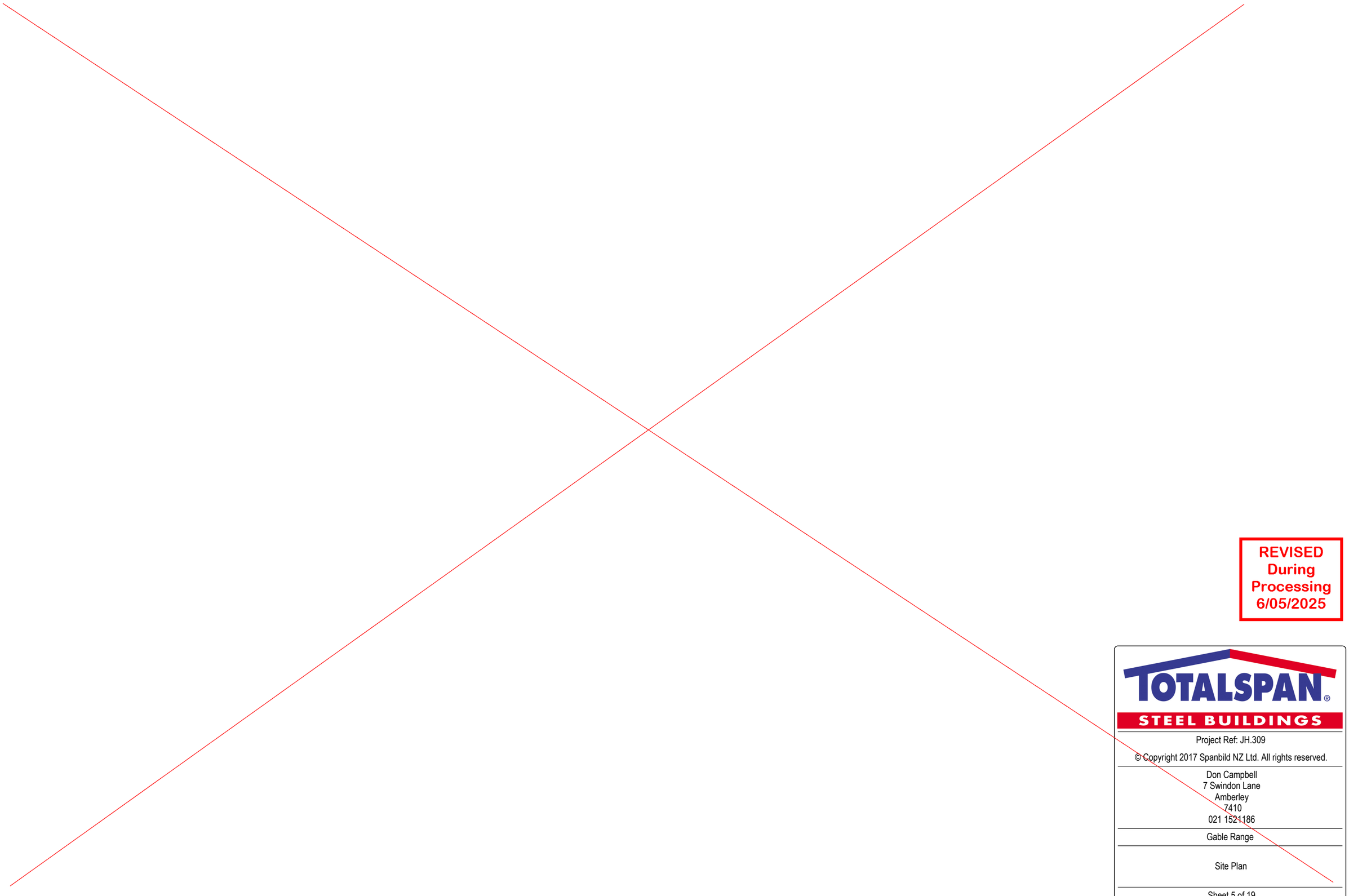

REVISED
During
Processing
6/05/2025

TOTALSPAN®
STEEL BUILDINGS

Project Ref: JH.309

© Copyright 2017 Spanbild NZ Ltd. All rights reserved.

Don Campbell
7 Swindon Lane
Amberley
7410
021 1521186

Gable Range

Site Plan

HDC Approved Consent Document (In accordance with BA 2004, Sec. 49(1)) - Processed by : Carl Sherwood - BC No. 250126

ROOF - (BAYS 2-1)

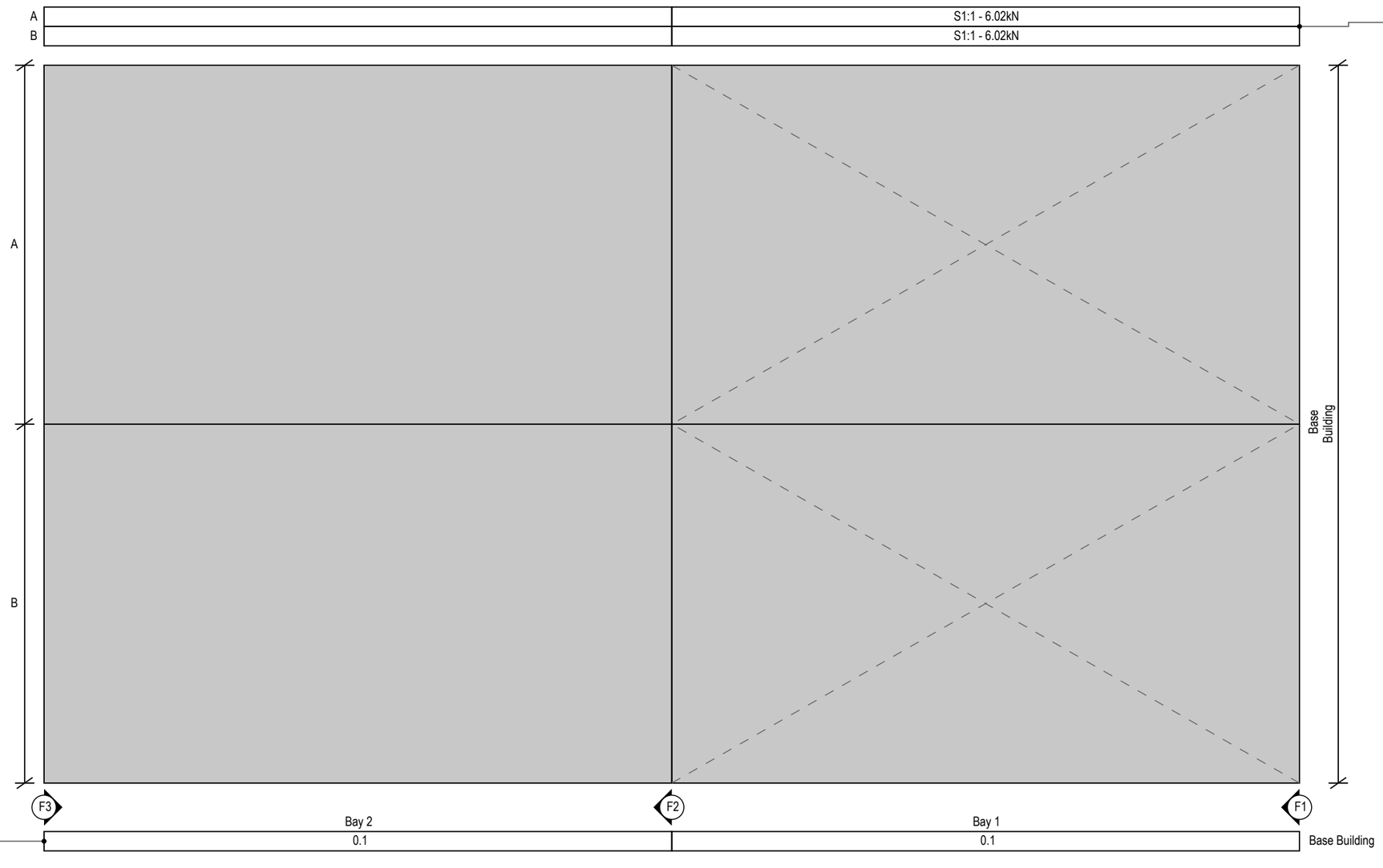

BRACING kN (Totals)		
Location	Required	Achieved
A	0.93 kN	6.02 kN
B	0.93 kN	6.02 kN

BRACING DESIGN NOTES

All bracing must be connected to main structural members i.e. Portal Legs, Portal Rafters, End Wall, Uprights & Main Access Door Jambs. Bracing shall not be solely connected to intermediate members such as Girts, Purlins, Minor Access Door Jambs & PA Door Jambs.

BRACING LEGENDS

S1:1

Mitek Strip-Brace 27x0.6mm G550, configured as a single cross.

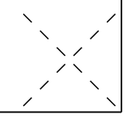

FRAMING SECTION TABLES	
Base Building - 0.1	
Design	Closed
Purlin (Bridge Count)	C100-10(1)
Purlin Centres	0.976m

VIEWS

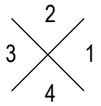

TOTALSPAN® STEEL BUILDINGS

Project Ref: JH.309

© Copyright 2017 Spanbild NZ Ltd. All rights reserved.

Don Campbell
7 Swindon Lane
Amberley
7410
021 1521186

Gable Range - Design

Engineering Tables

HDC Approved Consent Document (In accordance with BA 2004, Sec. 49(1)) - Processed by : Carl Sherwood - BC No. 250126

VIEW 2 - BUILDING SIDE (BAYS 1-2)

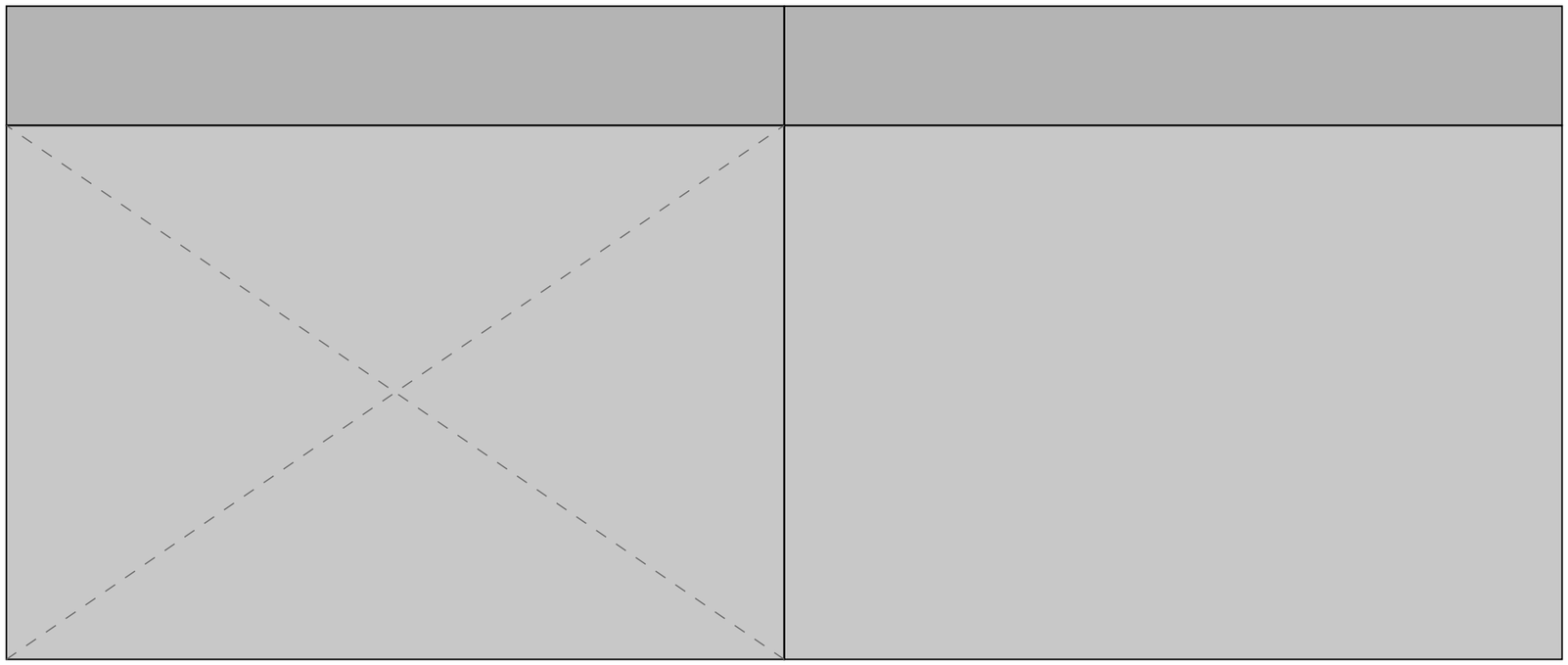

FRAMING SECTION TABLES	
Base Building - 2.1	
Design	Closed
Girt (Bridge Count)	C80-95(1)
Girt Centres	1.140m

	Bay 1	Bay 2
	2.1	2.1
	S1:1 - 5.77kN	

BRACING kN (Totals)	
Required	1.77 kN
Achieved	5.77 kN

VIEWS
2
3 1
4

TOTALSPAN® STEEL BUILDINGS

Project Ref: JH.309

© Copyright 2017 Spanbild NZ Ltd. All rights reserved.

Don Campbell
7 Swindon Lane
Amberley
7410
021 1521186

Gable Range - Design

Engineering Tables

HDC Approved Consent Document (In accordance with BA 2004, Sec. 49(1)) - Processed by : Carl Sherwood - BC No. 250126

VIEW 4 - BUILDING SIDE (BAYS 2-1)

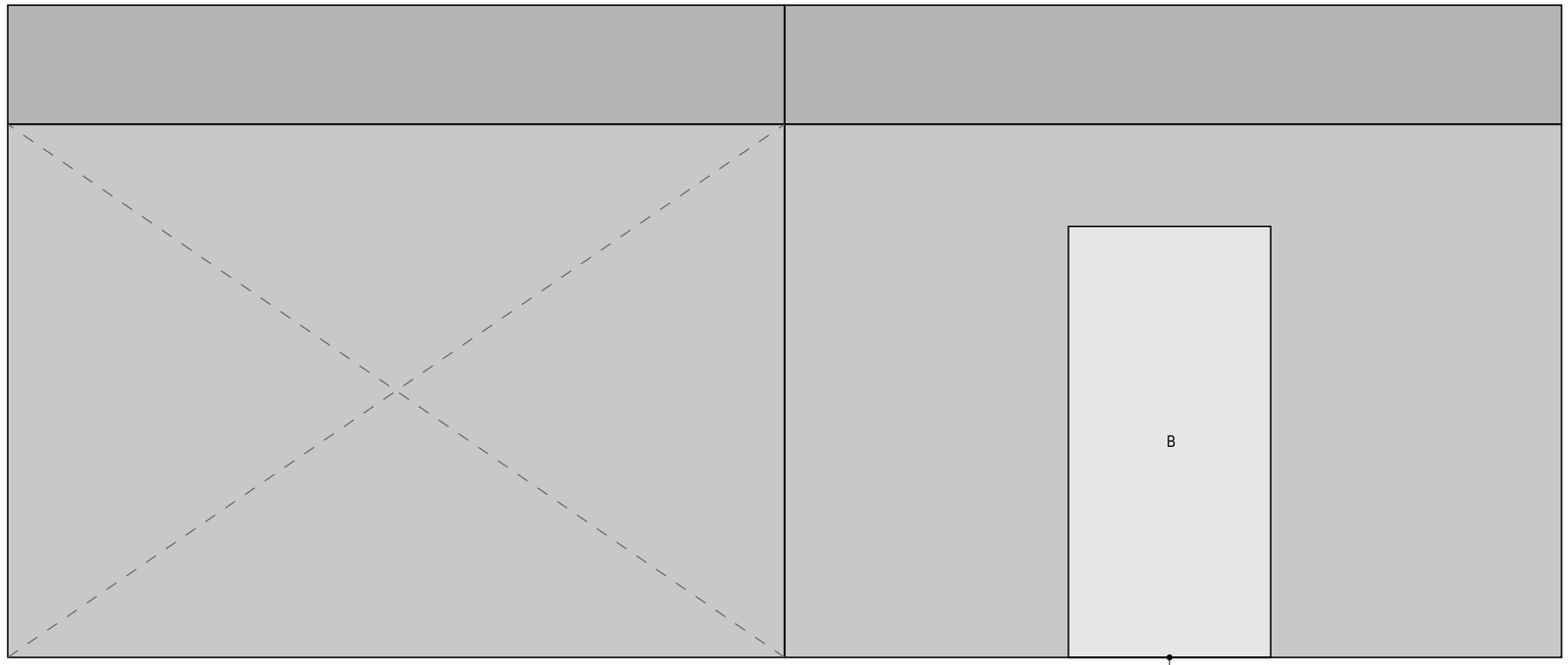

FRAMING SECTION TABLES	
Base Building - 4.1	
Design	Closed
Girt (Bridge Count)	C80-95(1)
Girt Centres	1.140m

OPENING SECTION TABLES	
Opening - B	
Jambs & Head Beam	C80-95

BRACING kN (Totals)	
Required	1.77 kN
Achieved	5.77 kN

VIEWS
2
3 1
4

TOTALSPAN® STEEL BUILDINGS

Project Ref: JH.309

© Copyright 2017 Spanbild NZ Ltd. All rights reserved.

Don Campbell
7 Swindon Lane
Amberley
7410
021 1521186

Gable Range - Design

Engineering Tables

HDC Approved Consent Document (In accordance with BA 2004, Sec. 49(1)) - Processed by : Carl Sherwood - BC No. 250126

FRAME F1

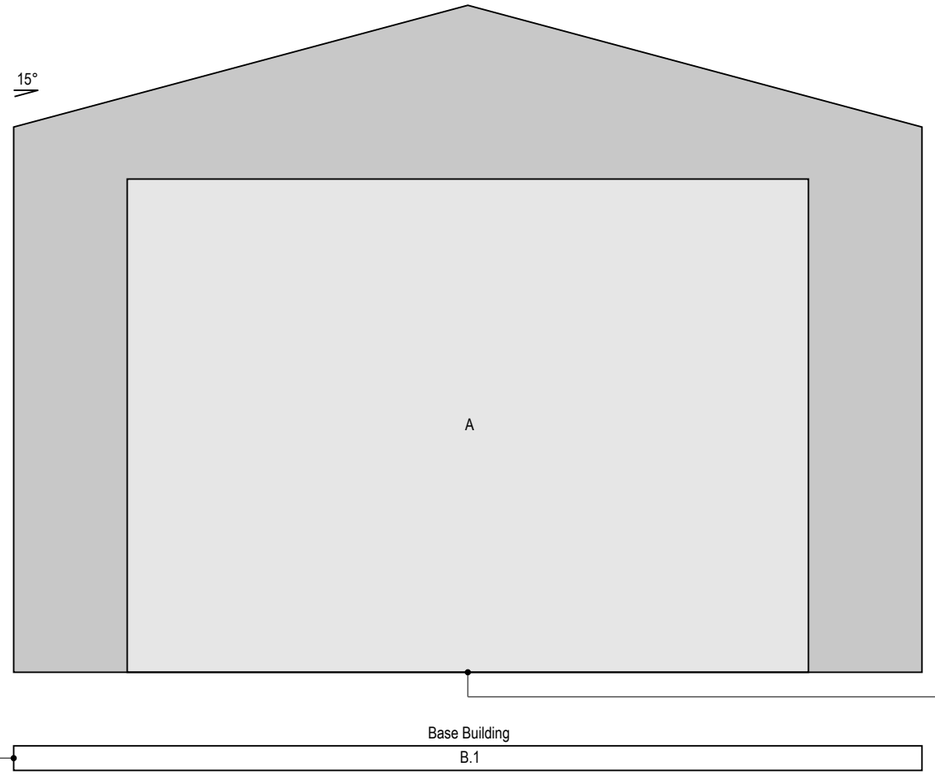

FRAMING SECTION TABLES	
Base Building - B.1	
Design	Closed
Leg & Rafter	C150-10
Girt	C80-75
Girt Centres	1.140m

OPENING SECTION TABLES	
Opening - A	
Jambs	C150-15
Head Beam	C150-10

VIEWS
2
3 1
4

TOTALSPAN® STEEL BUILDINGS

Project Ref: JH.309

© Copyright 2017 Spanbild NZ Ltd. All rights reserved.

Don Campbell
7 Swindon Lane
Amberley
7410
021 1521186

Gable Range - Design

Engineering Tables

HDC Approved Consent Document (In accordance with BA 2004, Sec. 49(1)) - Processed by : Carl Sherwood - BC No. 250126

FRAME F2

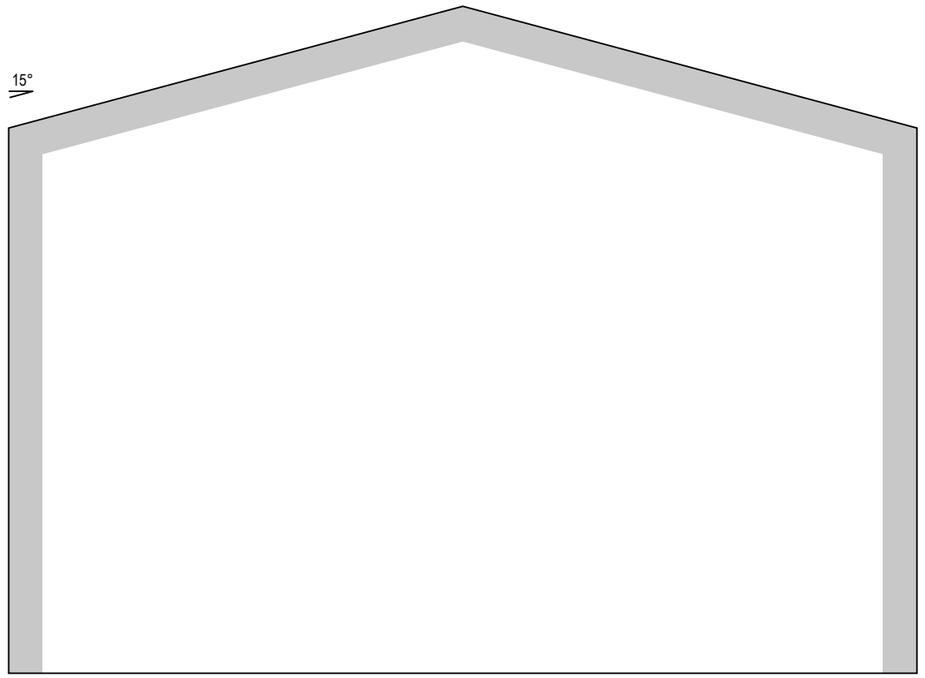

FRAMING SECTION TABLES	
Base Building - B.2	
Design	Closed
Leg & Rafter	C150-10

Base Building
B.2

VIEWS
2
3 1
4

© Copyright 2017 Spanbild NZ Ltd. All rights reserved.

Project Ref: JH.309

Don Campbell
7 Swindon Lane
Amberley
7410
021 1521186

Gable Range - Design

Engineering Tables

HDC Approved Consent Document (In accordance with BA 2004, Sec. 49(1)) - Processed by : Carl Sherwood - BC No. 250126

FRAME F3

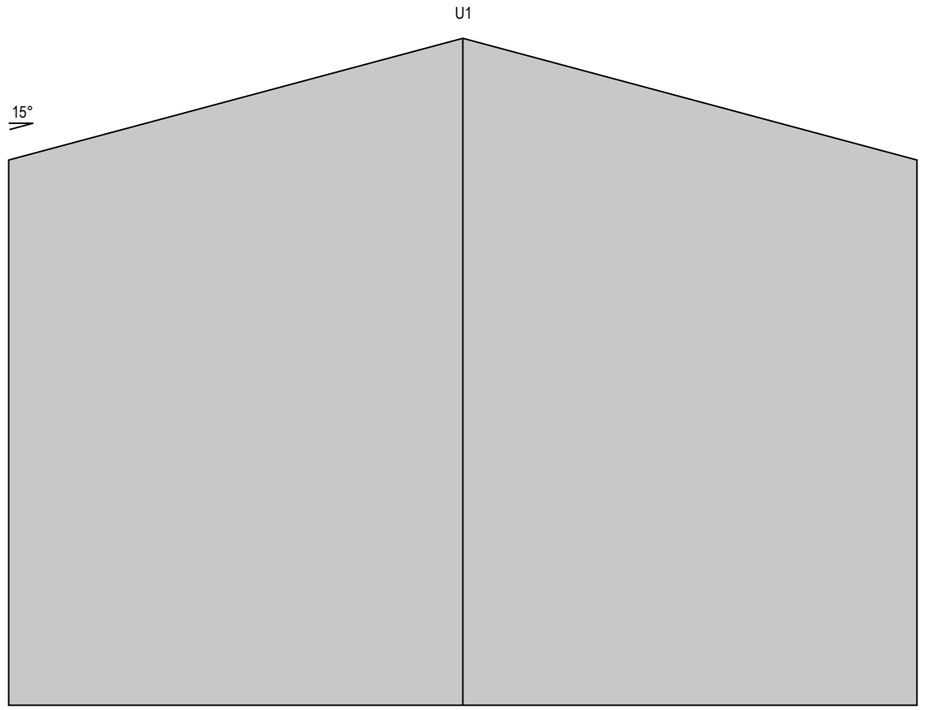

FRAMING SECTION TABLES	
Base Building - B.3	
Design	Closed
Leg & Rafter	C150-10
Upright - U1	C80-95
Girt	C80-75
Girt Centres	1.140m

VIEWS
2
3 1
4

TOTALSPAN® STEEL BUILDINGS

Project Ref: JH.309

© Copyright 2017 Spanbild NZ Ltd. All rights reserved.

Don Campbell
7 Swindon Lane
Amberley
7410
021 1521186

Gable Range - Design

Engineering Tables

HDC Approved Consent Document (In accordance with BA 2004, Sec. 49(1)) - Processed by : Carl Sherwood - BC No. 250126

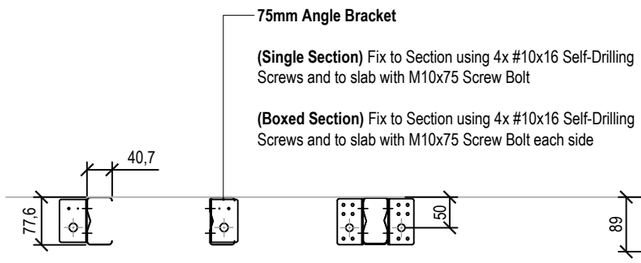

C80 Foundation Connections
SCALE 1:10

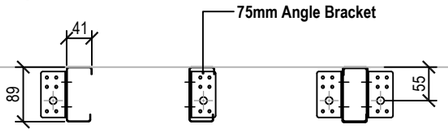

C90 Foundation Connections
SCALE 1:10

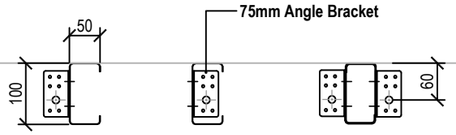

C100 Foundation Connections
SCALE 1:10

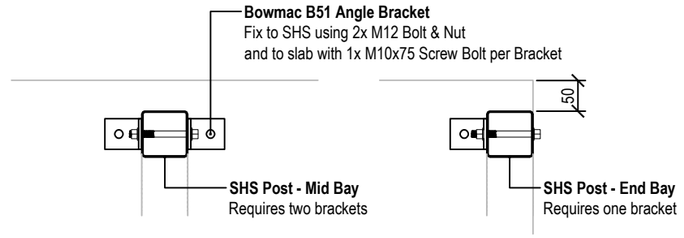

SHS Foundation Connections
SCALE 1:10

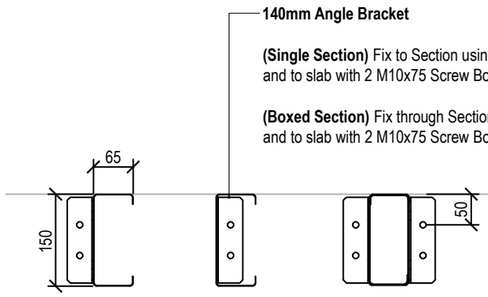

C150 Foundation Connections
SCALE 1:10

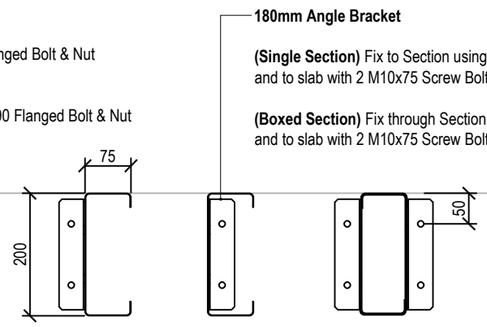

C200 Foundation Connections
SCALE 1:10

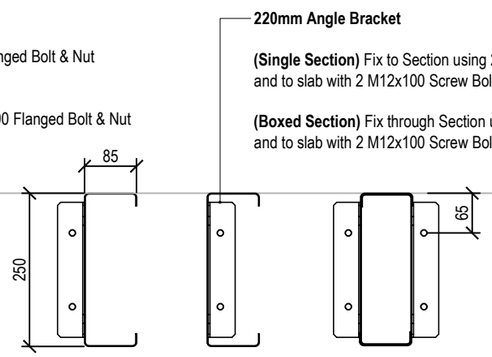

C250 Foundation Connections
SCALE 1:10

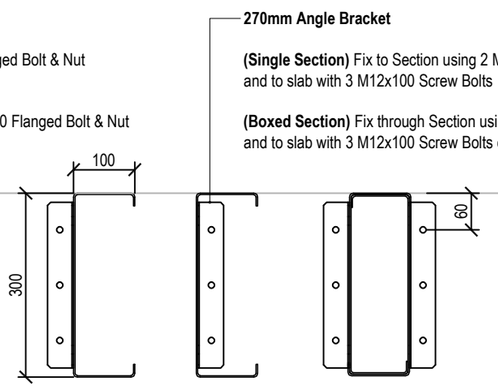

C300 Foundation Connections
SCALE 1:10

Important Notes

1. Recommended edge distances are listed above, brackets may be repositioned slightly +/- 3mm however concrete edge distance to bolt centre shall not be less than be 50mm
2. **C/B150-15 & C/B150-19 Portal Legs** shall have a M10x38mm Sqaure Washer to M10x75 Screw Bolts (otherwise, not required.)

HDC Approved Consent Document (In accordance with BA 2004, Sec. 49(1)) - Processed by : Carl Sherwood - BC No. 250126

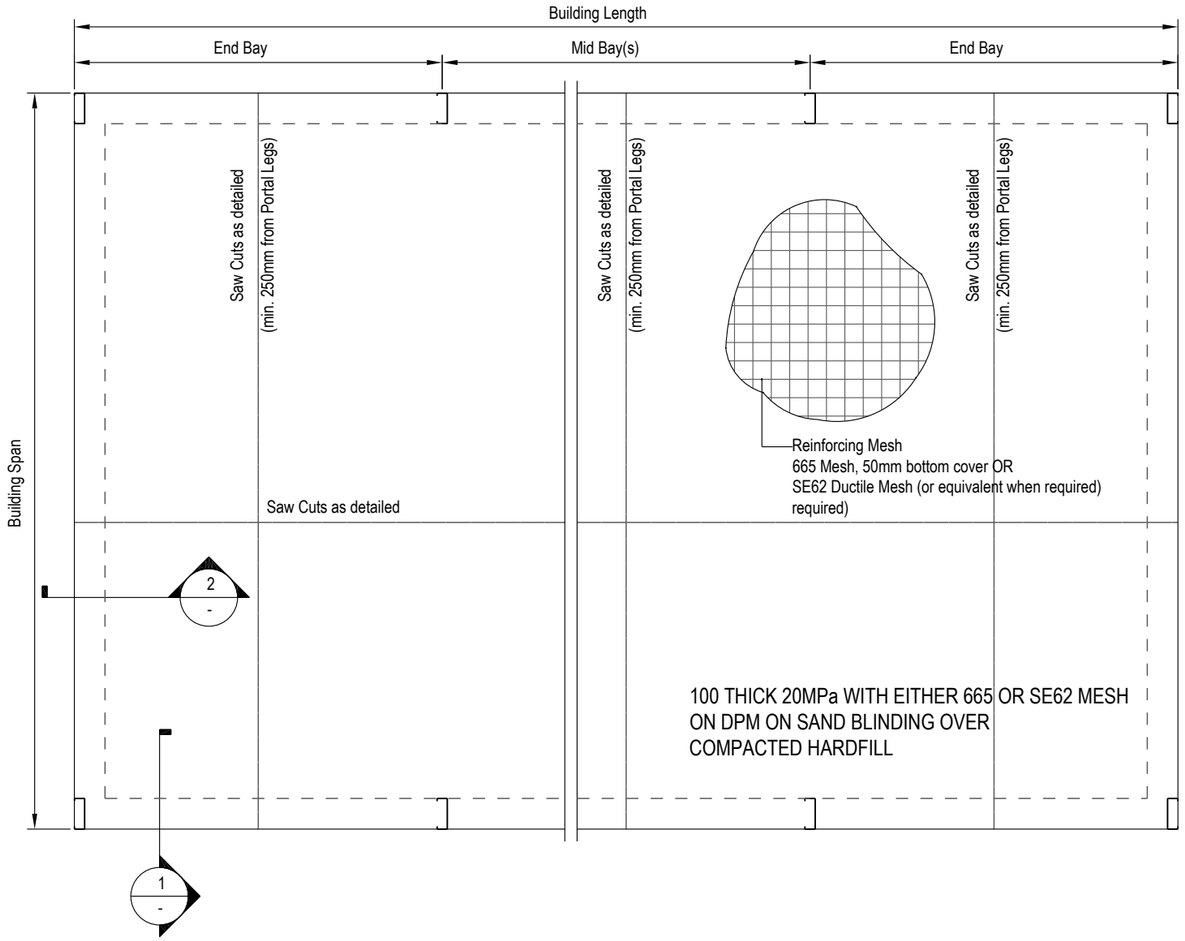

- **INDICATIVE SLAB PLAN (FOR NOTATION REFERENCE ONLY)**
SCALE 1:50

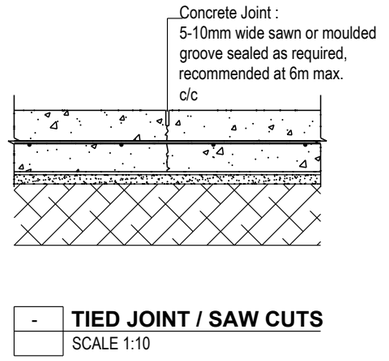

- **TIED JOINT / SAW CUTS**
SCALE 1:10

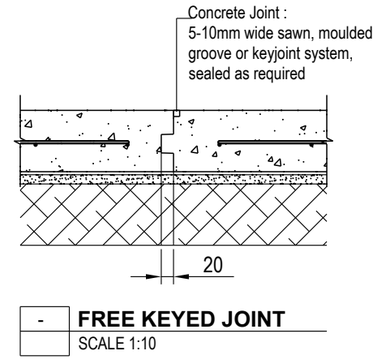

- **FREE KEYED JOINT**
SCALE 1:10

Important Notes

1. **Perimeter reinforcing**
   1.1. **Central reinforcing specified "along" building length;** shall continue "across" building span
   1.2. **Top and Bottom reinforcing specified "along" building length;** the lesser reinforcing specified (where applicable) shall be used for single central reinforcing "across" building span. Reinforcing "across" shall wrap around the corners 600mm to remain "continuous".
2. Slab thickness may be increased only in case of large machinery, equipment where heavier traffic loadings are required. Check control joint requirements as per CCANZ guidelines and install where recommended.
3. This slab has been designed in accordance with NZS3101:2006 and compliant to where lesser ductile mesh may be used per clause 5.3.2.7 (a) where "The yielding of reinforcement will not occur at the ultimate limit state".
4. Typical GL to FFL is 100mm for a "non-habitable" foundation.
5. Saw cuts to be minimum 250mm away from Portal Legs.
6. In areas where soil bearing is less than 225kPa UBC, excavate trench (max 600mm depth) to ground with 225kPa UBC and backfill with compacted hardfill.

Maximum Spacing of Free Joints (m) - as per CCANZ guidelines			
Steel	100mm Slab	120/125mm Slab	150mm Slab
665	26	21	17
663	37	30	25
661			35

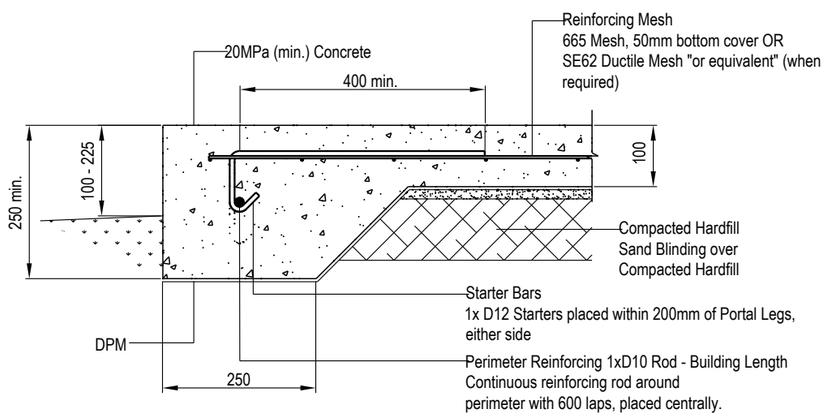

1 - **100MM FOUNDATION (CENTRAL REINFORCING)**
SCALE 1:10

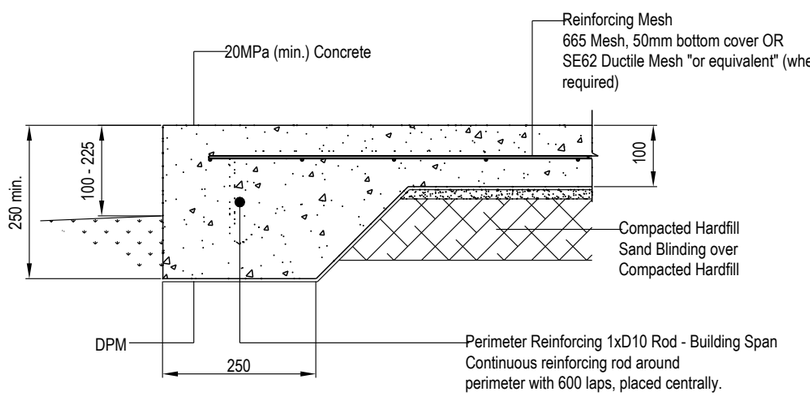

2 - **100MM FOUNDATION (CENTRAL REINFORCING)**
SCALE 1:10

TOTALSPAN®
STEEL BUILDINGS

Project Ref: JH.309

© Copyright 2017 Spanbild NZ Ltd. All rights reserved.

Don Campbell
7 Swindon Lane
Amberley
7410
021 1521186

Gable Range - Design

Foundation Details SD-F02

HDC Approved Consent Document (In accordance with BA 2004, Sec. 49(1)) - Processed by : Carl Sherwood - BC No. 250126

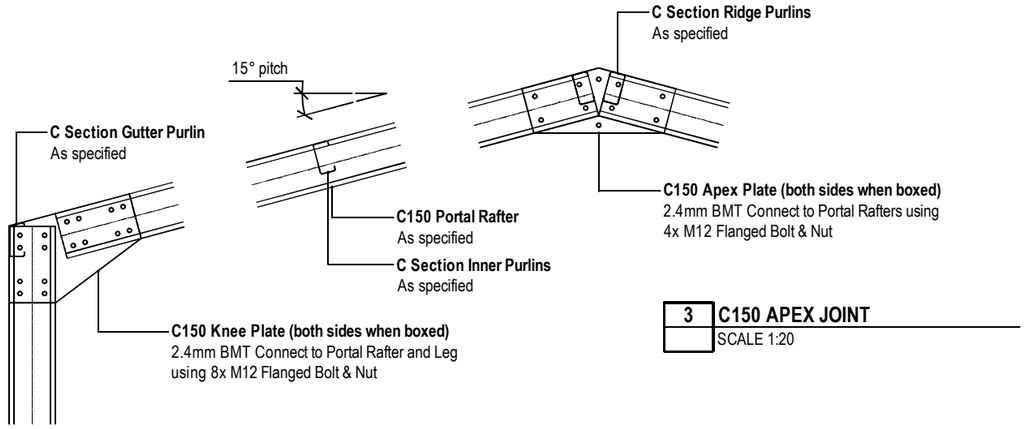

3 C150 APEX JOINT
SCALE 1:20

2 C150 KNEE JOINT
SCALE 1:20

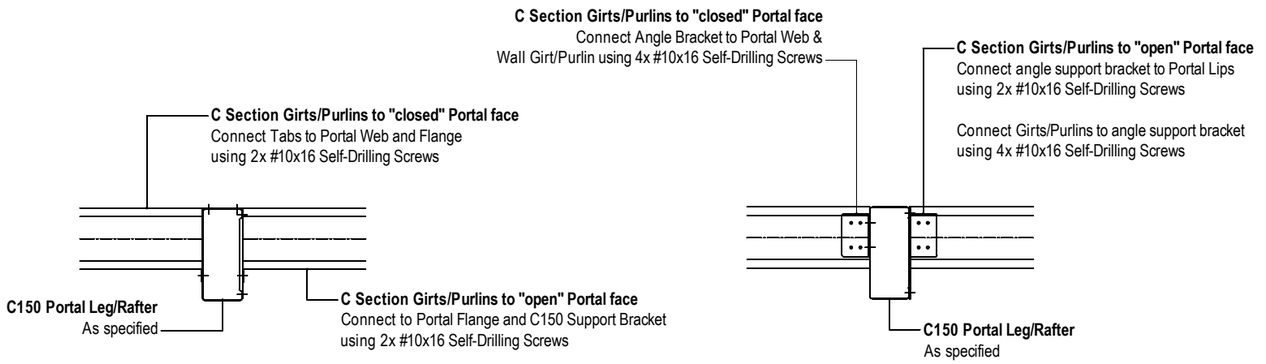

6 GIRT/PURLIN TABBED CONNECTION
SCALE 1:10

7 GIRT/PURLIN BRACKET CONNECTION
SCALE 1:10

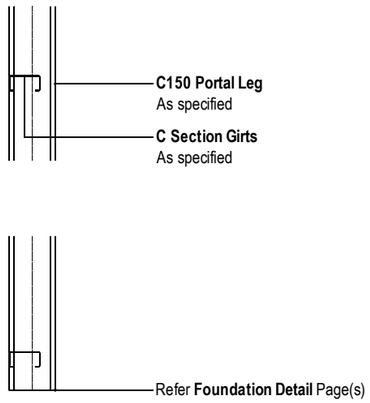

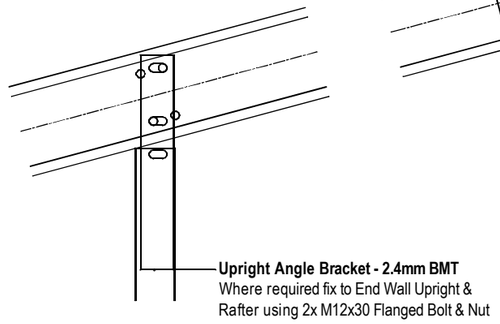

5 UPRIGHT TO RAFTER CONNECTION
SCALE 1:10

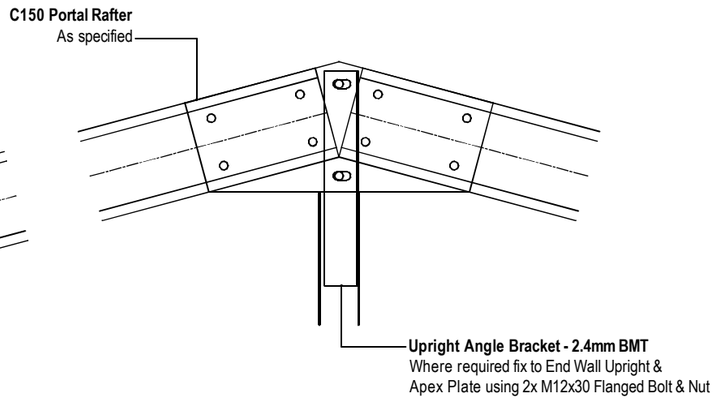

4 UPRIGHT TO APEX CONNECTION
SCALE 1:10

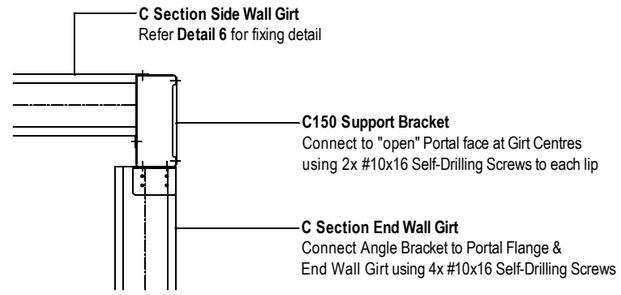

8 END WALL GIRT CONNECTION
SCALE 1:10

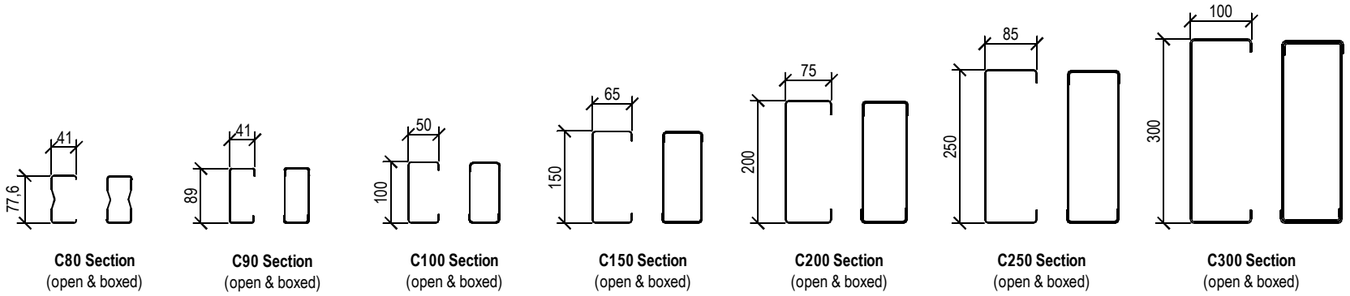

- C SECTION PROFILES (INCL. BOXING)
SCALE 1:20

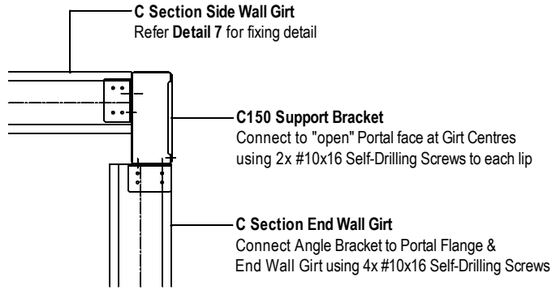

9 END WALL GIRT CONNECTION
SCALE 1:10

TOTALSPAN®
STEEL BUILDINGS

Project Ref: JH.309

© Copyright 2017 Spanbild NZ Ltd. All rights reserved.

Don Campbell
7 Swindon Lane
Amberley
7410
021 1521186

Gable Range - Design

Frame Details SD-P01

HDC Approved Consent Document (In accordance with BA 2004, Sec. 49(1)) - Processed by : Carl Sherwood - BC No. 250126

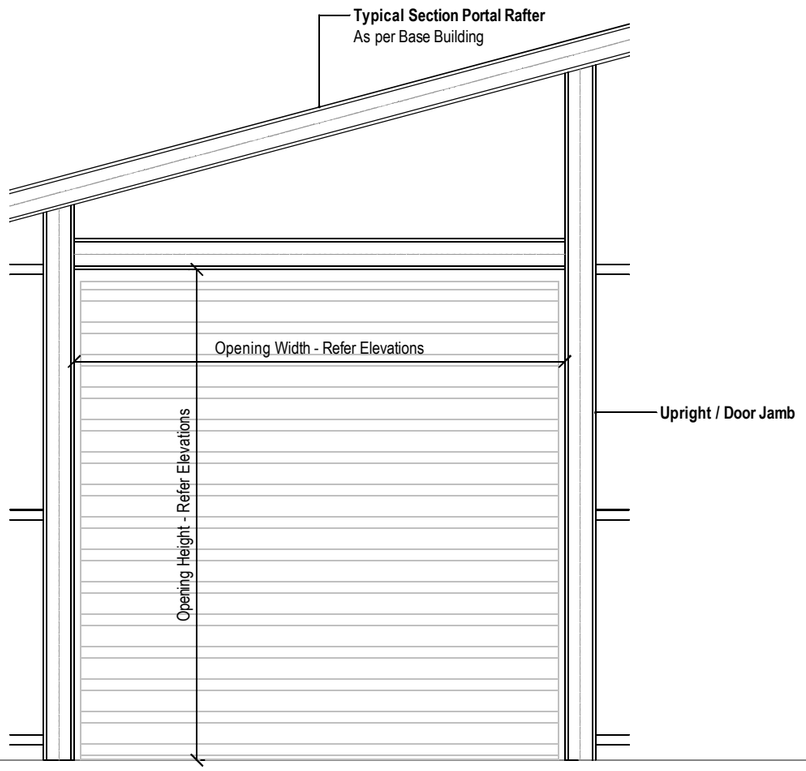

- DOOR JAMB/UPRIGHT TO RAFTER CONNECTION
SCALE 1:10

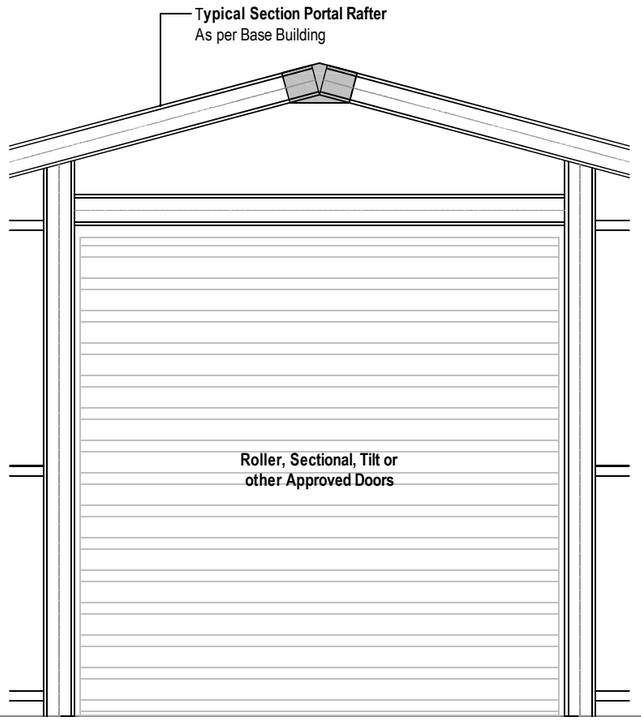

- HEAD BEAM TO DOOR JAMB CONNECTION
SCALE 1:10

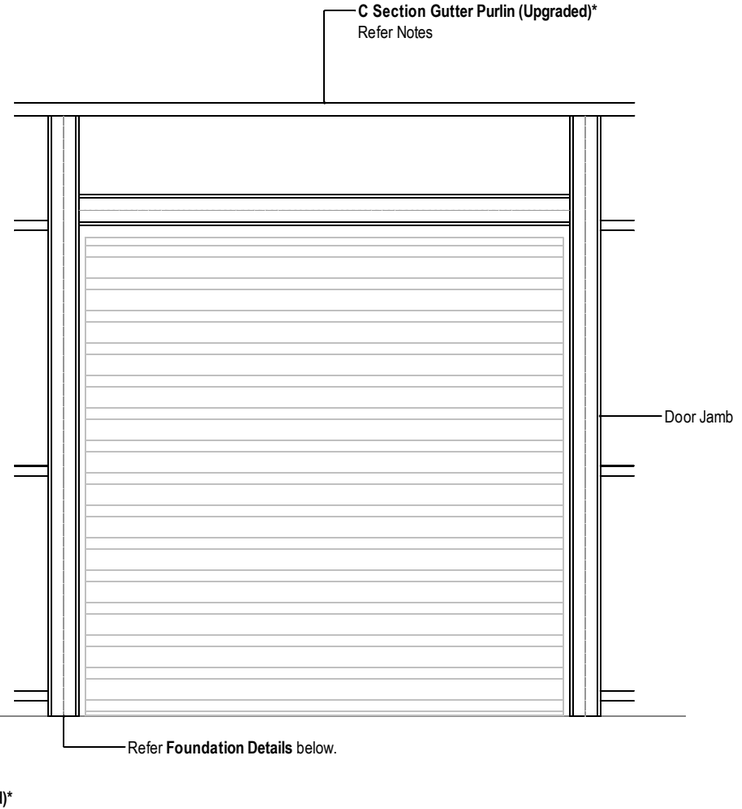

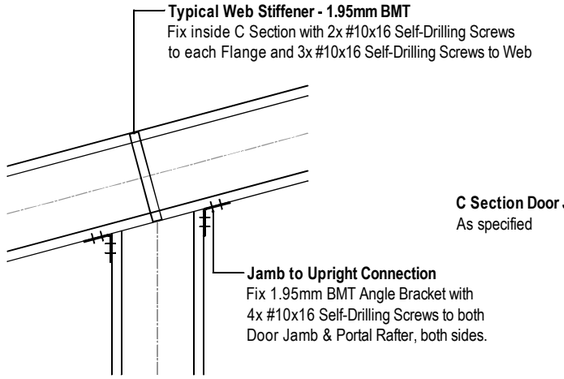

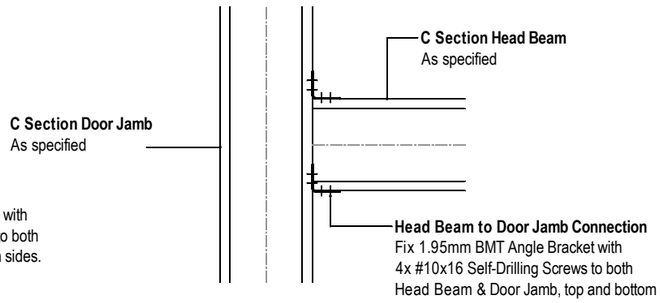

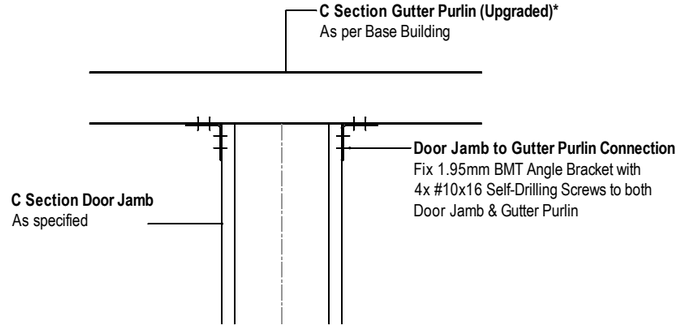

- HEAD BEAM TO GUTTER PURLIN CONNECTION
SCALE 1:10

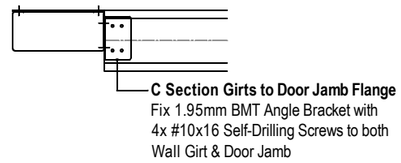

- GIRT TO DOOR JAMB CONNECTION
SCALE 1:10

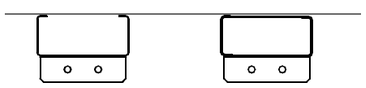

C150 Section Door Jambs
(open or boxed options)

- C150 Jamb to Foundation Connections
SCALE 1:10

TOTALSPAN®
STEEL BUILDINGS

Project Ref: JH.309

© Copyright 2017 Spanbild NZ Ltd. All rights reserved.

Don Campbell
7 Swindon Lane
Amberley
7410
021 1521186

Gable Range - Design

Major Openings SD-M01

HDC Approved Consent Document (In accordance with BA 2004, Sec. 49(1)) - Processed by : Carl Sherwood - BC No. 250126

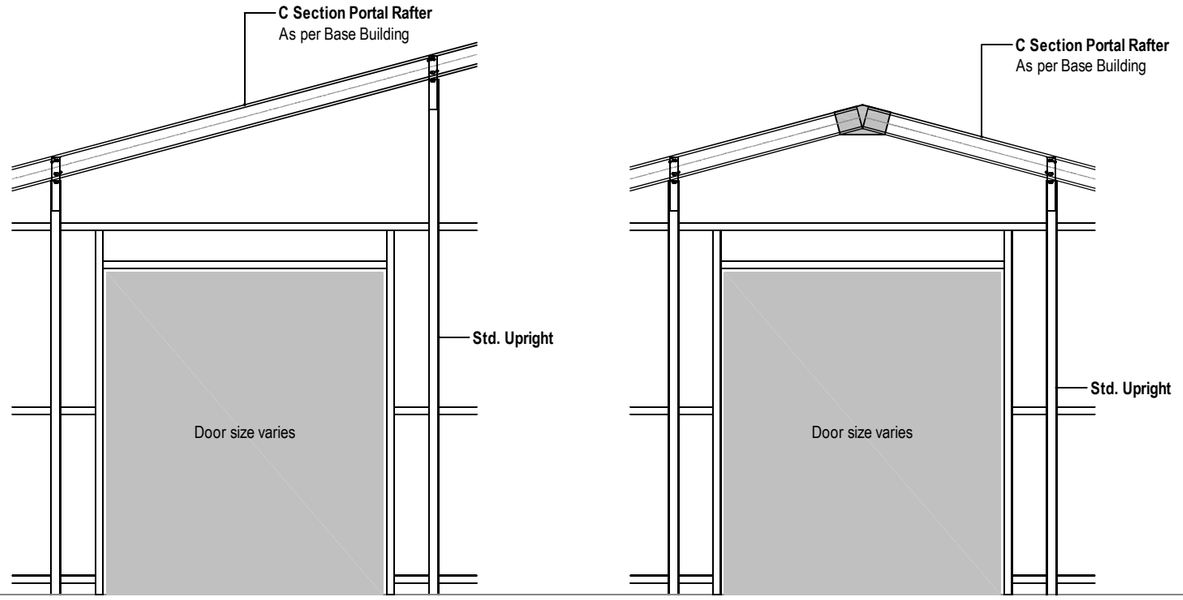

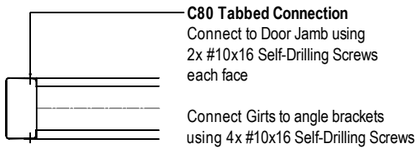

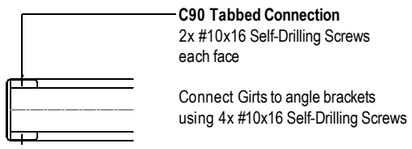

-	C SECTION TABBED CONNECTION
	SCALE 1:10

-	C SECTION NOTCHED CONNECTION
	SCALE 1:10

TOTALSPAN®
STEEL BUILDINGS

Project Ref: JH.309

© Copyright 2017 Spanbild NZ Ltd. All rights reserved.

Don Campbell
7 Swindon Lane
Amberley
7410
021 1521186

Gable Range - Design

Minor Door Openings SD-M05

HDC Approved Consent Document (In accordance with BA 2004, Sec. 49(1)) - Processed by : Carl Sherwood - BC No. 250126

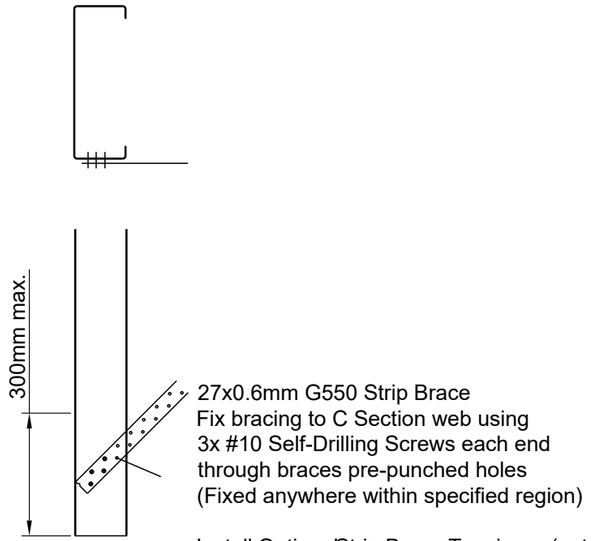

- SINGLE STRIP BRACE FIXING
SCALE 1:10

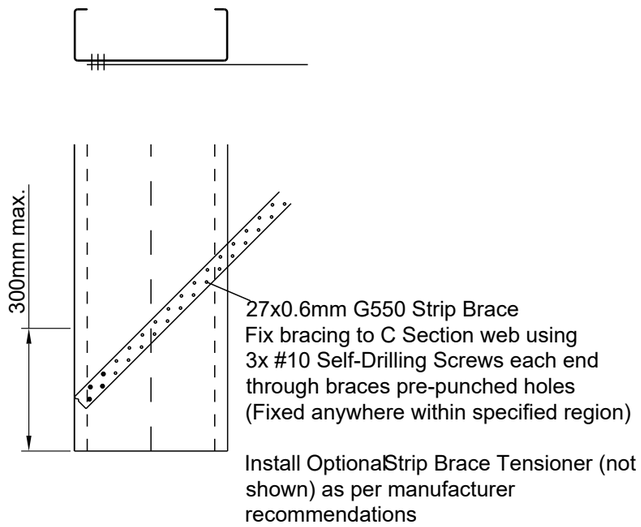

- SINGLE STRIP BRACE FIXING
SCALE 1:10

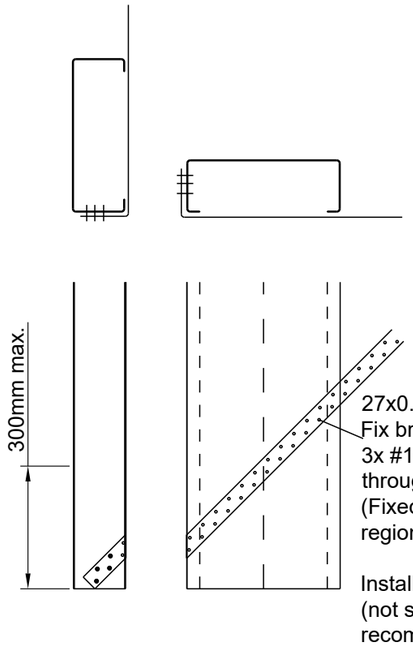

- SINGLE STRIP BRACE FIXING
SCALE 1:10

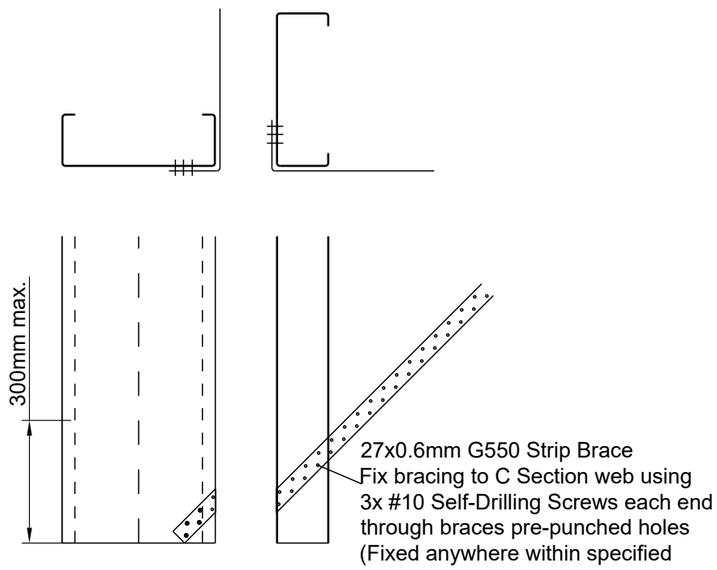

- SINGLE STRIP BRACE FIXING
SCALE 1:10

TOTALSPAN®
STEEL BUILDINGS

Project Ref: JH.309

© Copyright 2017 Spanbild NZ Ltd. All rights reserved.

Don Campbell
7 Swindon Lane
Amberley
7410
021 1521186

Gable Range - Design

Bracing Details

HDC Approved Consent Document (In accordance with BA 2004, Sec. 49(1)) - Processed by : Carl Sherwood - BC No. 250126

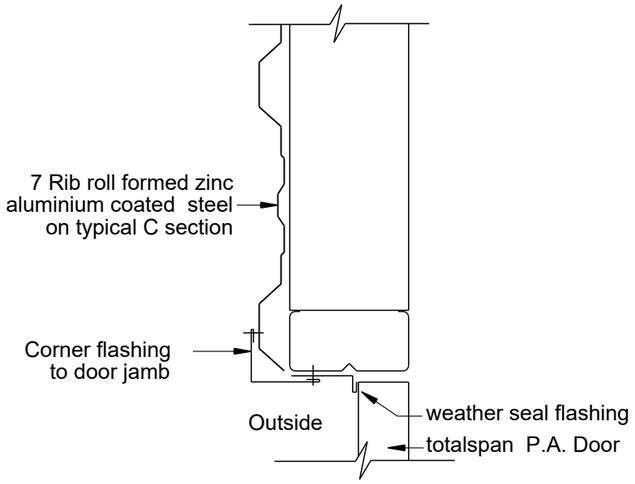

- **P.A. Door Jamb Detail**
  SCALE: NTS

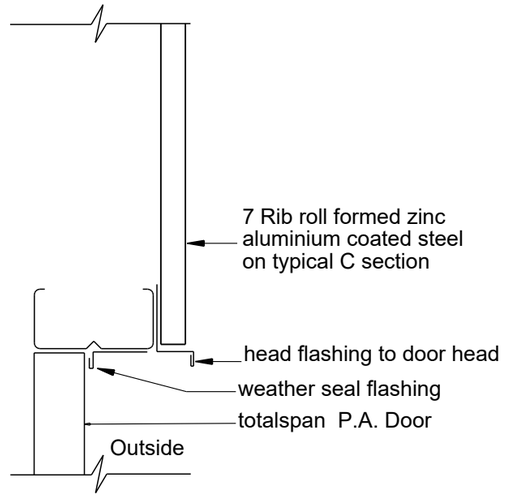

- **P.A. Door Head Detail**
  SCALE: NTS

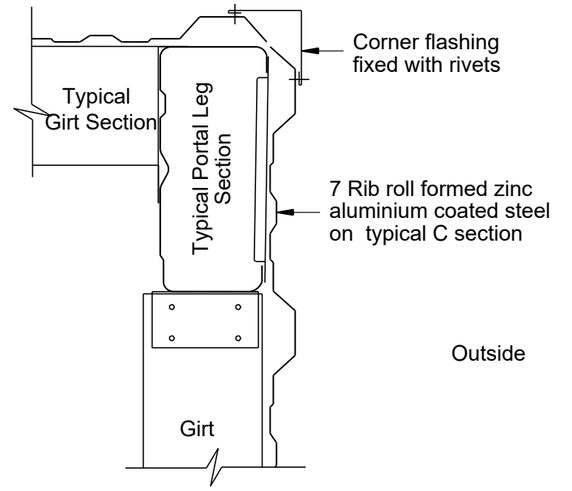

- **External Corner**
  SCALE: NTS

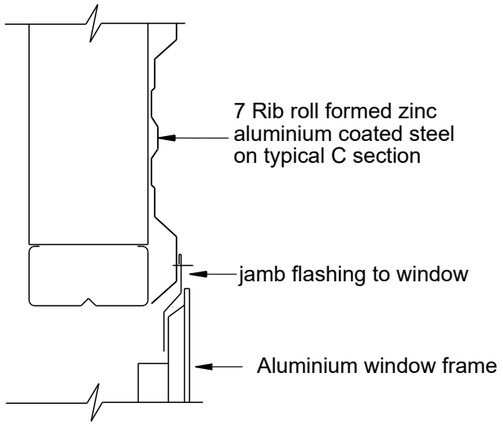

- **Window Jamb Detail**
  SCALE: NTS

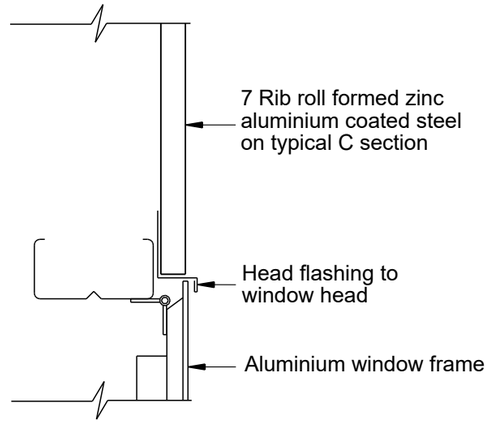

- **Window Head Detail**
  SCALE: NTS

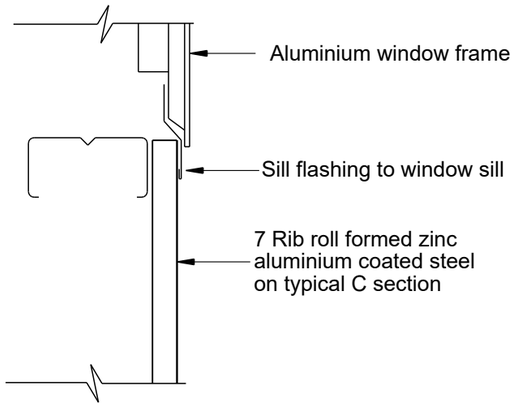

- **Window Sill Detail**
  SCALE: NTS

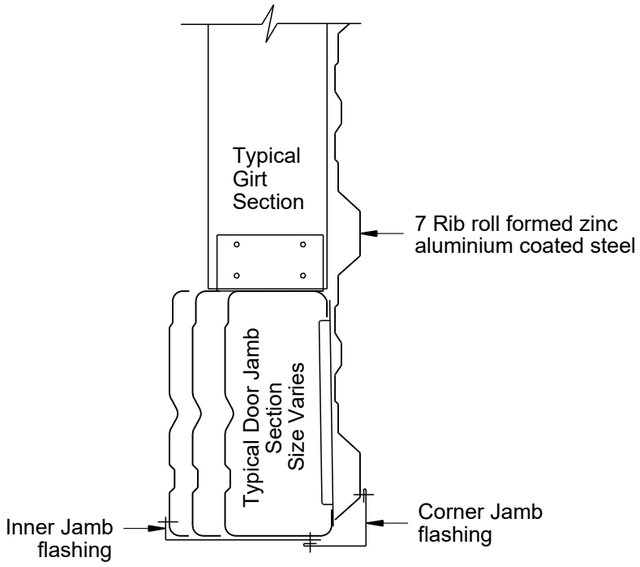

- **Main Access Door Jamb Detail**
  SCALE: NTS

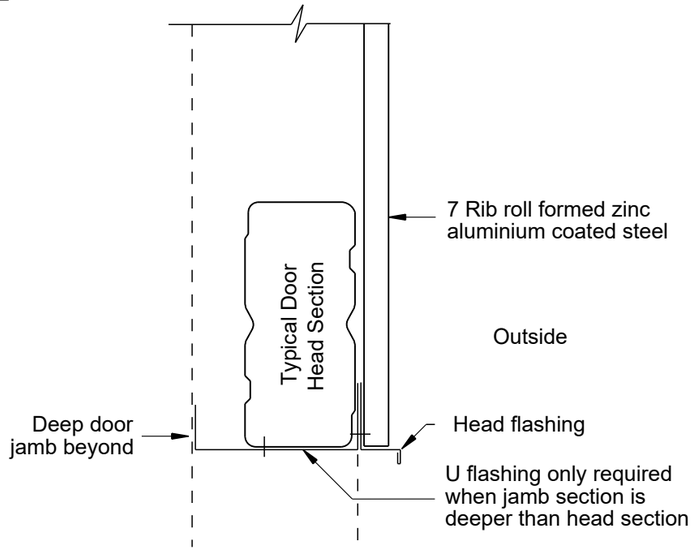

- **Main Access Door Head Detail**
  SCALE: NTS

TOTALSPAN®
STEEL BUILDINGS

Project Ref: JH.309

© Copyright 2017 Spanbild NZ Ltd. All rights reserved.

Don Campbell
7 Swindon Lane
Amberley
7410
021 1521186

Gable Range

Flashing Details

HDC Approved Consent Document (In accordance with BA 2004, Sec. 49(1)) - Processed by : Carl Sherwood - BC No. 250126

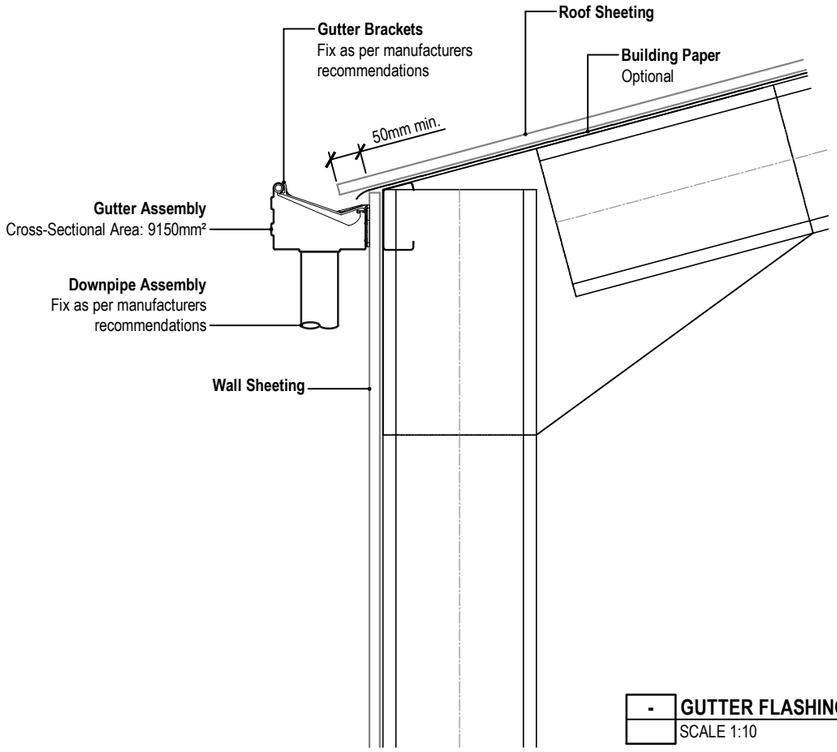

- **GUTTER FLASHING DETAIL**
  SCALE 1:10

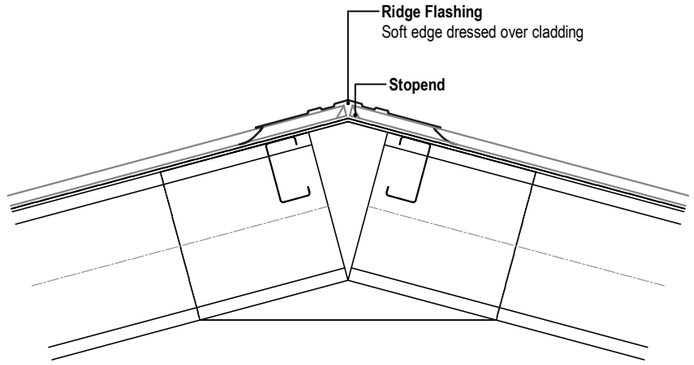

- **RIDGE FLASHING DETAIL**
  SCALE 1:10

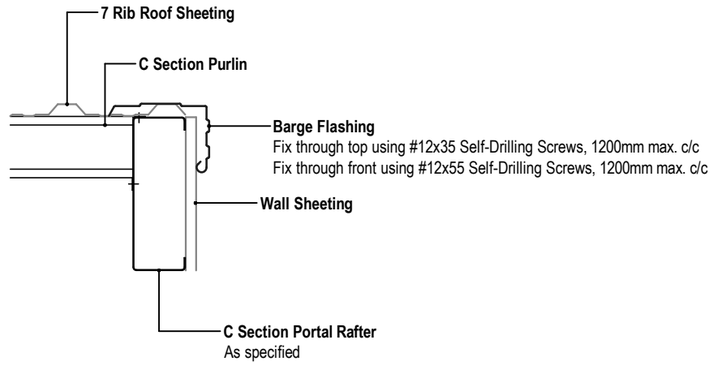

- **BARGE FLASHING DETAIL**
  SCALE 1:10

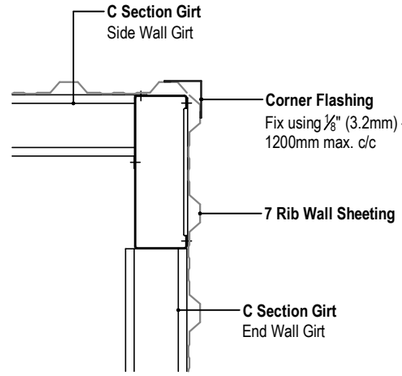

- **CORNER FLASHING DETAIL**
  SCALE 1:10

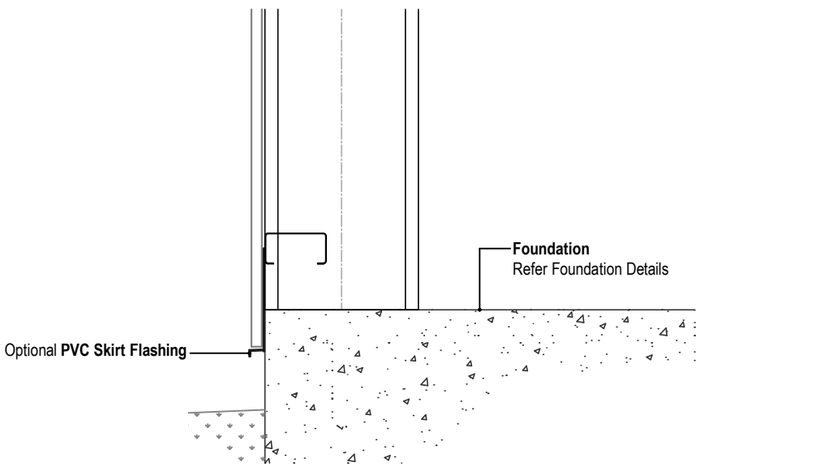

- **SKIRT FLASHING DETAIL**
  SCALE 1:10

Important Design Notes

1. Roof and Wall Sheeting shall be 0.35 - 0.55 B.M.T, AZ150 Coating, G550 Steel only. Alternative claddings (excluding light-weight translucent panel i.e. Ampelite), require an independent specific design certificate for the scope of work.
2. Wall Cladding to have minimum 50mm cover and 40mm min. clearance to ground level
3. Fixing pattern as per E2/AS1 or NZ MRM - NZ Metal Roof and Wall Cladding Code of Practice.
4. Flashings shall be fixed as per manufacturers recommendations.
5. Additional options may include:
   - 5.1. Snow straps for gutters
   - 5.2. Gutter purlin flashing
   - 5.3. Building paper in walls

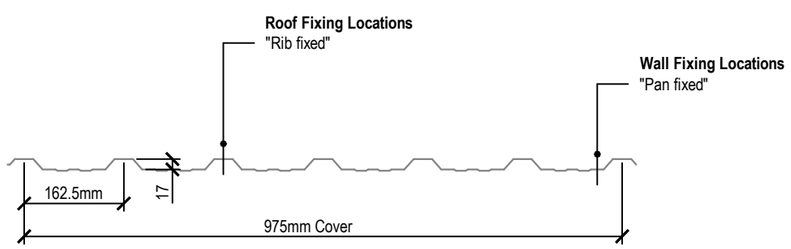

- **7 RIB CLADDING PROFILE**
  SCALE 1:10

TOTALSPAN®
STEEL BUILDINGS

Project Ref: JH.309

© Copyright 2017 Spanbild NZ Ltd. All rights reserved.

Don Campbell
7 Swindon Lane
Amberley
7410
021 1521186

Gable Range

Flashing Detail SD-E01

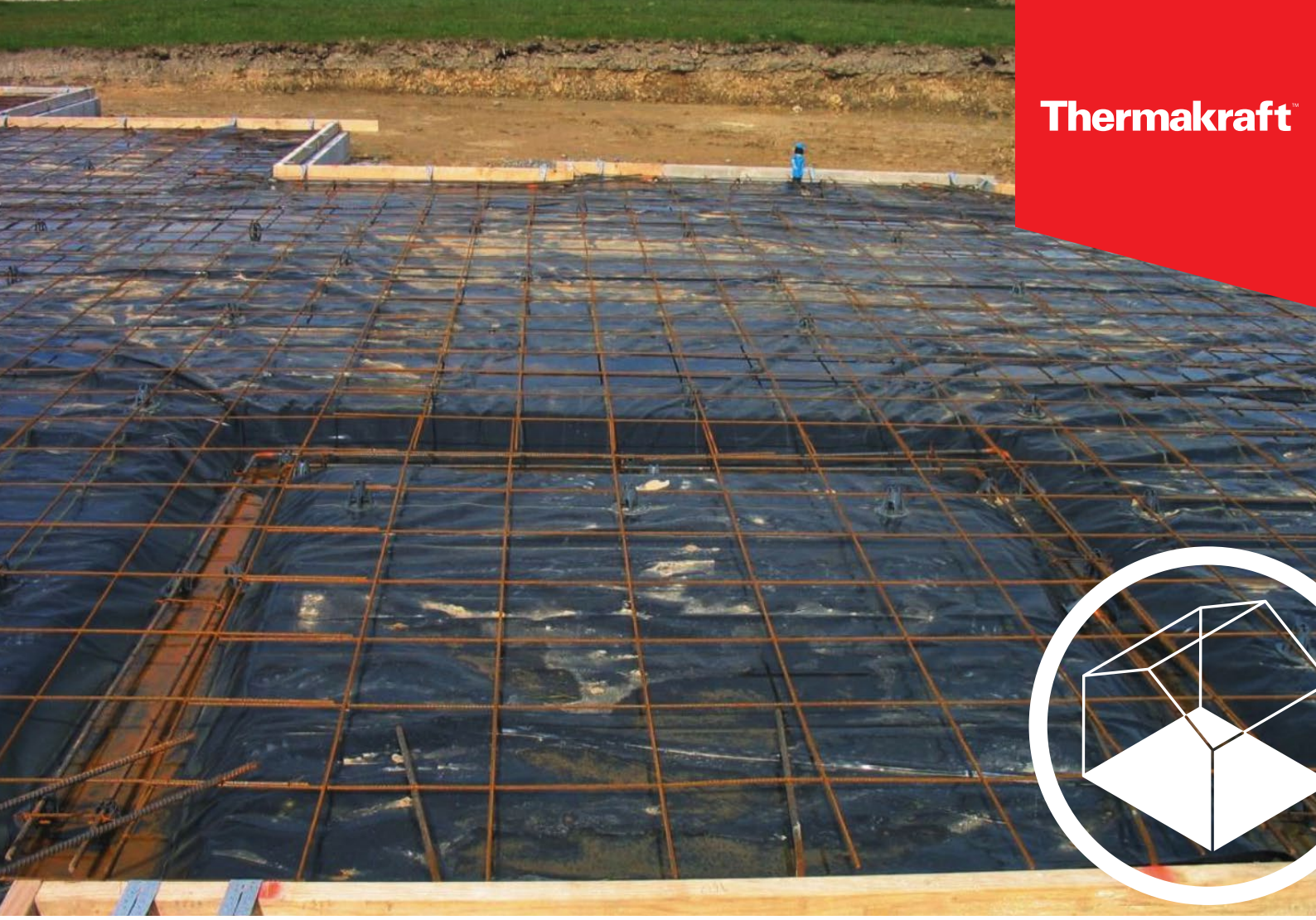

Thermakraft™

Product Data Sheet

THERMATHENE BLACK

Damp Proof Membrane (DPM)

Thermathene Black is a concrete underlay that is made from a tear and puncture resistant polyethylene film. It is commonly known as a Damp Proof Membrane (DPM).

Thermathene Black comes in two roll sizes:

Product Code	Width	Length	Coverage
PF250025	4000mm	25m	100m^2 coverage
PF250050	4000mm	50m	200m^2 coverage

Smarter products. Better buildings.
thermakraft.co.nz

Thermathene Black

Damp Proof Membrane (DPM)

Scope of Use

Thermathene Black intended for use as a damp-proof membrane separating concrete slab from ground soil. The product acts as a vapour barrier to stop ground moisture penetrating the concrete. Thermathene Black must be sealed with Thermakraft White General Purpose tape at the laps joints to form a complete vapour barrier.

General

- Unaffected by LOSP treated timber. However, LOSP treated timber must have sufficient time for the solvent chemical to flash off in well ventilated area. Recommended minimum 7 days.
- 4m x 25m [100m2] and 4m x 50m [200m^2] unfolded size.
- 250 Micron in thickness.

Limitations

- Maximum weather or UV exposure is 28 days.
- Cannot be used as a roof or wall underlay.

Compliance

Thermathene Black is an acceptable solution as per the requirements of the NZBC. Thermathene Black meets the requirements of NZBC 3604:2011 Clause 7.5.4.2, NZBC Acceptable Solutions E2/AS1, Table 23 and NZS 4229:2013 Clause 7.4 & 7.6.

When Thermathene Black is used and installed as a damp-proof membrane as per Thermakraft's literature, the product will meet or contribute to meeting the following provisions of the NZBC: Clause B2 Durability: Performance B2.3.1 (a), 50 years, Clause E2 External Moisture: Performance E2.3.3 & Clause F2 Hazardous Materials: Performance F2.3.1.

Product Warranty

Standard Thermakraft warranty applies. Refer to Thermakraft Warranty Statement for further details. This is available online at **thermakraft.co.nz** or call **0800 806 595.**

Thermakraft Limited / 0800 806 595

Smarter products. Better buildings.

thermakraft.co.nz

The recommendations contained in Thermakraft's literature are based on good building practice, but are not an exhaustive statement of all relevant information and are subject to any conditions contained in the Warranty. All product dimensions and performance claims are subject to any variation caused by normal manufacturing process and tolerances. Furthermore, as the successful performance of the relevant system depends on numerous factors outside the control of Thermakraft (for example quality of workmanship and design), Thermakraft shall not be liable for the recommendations in that literature and the performance of the Product, including its suitability for any purpose or ability to satisfy the relevant provisions of the Building Code, regulations and standards. Literature subject to change without notification. Latest documentation can be found on the website. E&OE.

Issue 4, November 2019

Thermakraft™



Installation Guide

THERMATHENE BLACK

Damp Proof Membrane (DPM)

Thermathene Black is a concrete underlay that is made from a tear and puncture resistant polyethylene film. It is commonly known as a Damp Proof Membrane (DPM).

Product usage

Thermathene Black is used as a concrete underlay and a moisture vapour barrier in areas where protection is required. The product is 250 microns in thickness and is coloured black. Thermathene Black may also be used under suspended subfloors as ground protection from rising damp.

Smarter products. Better buildings.
thermakraft.co.nz

Installation Guide

Application Method

- Thermathene Black should be installed in accordance with the requirements of NZS3604:2011 and must be laid on a properly prepared base as required by NZS3604:2011 Section 7.5.3 to 7.5.6.2.
- Thermathene Black must be laid in a continuous manner with all laps minimum 150mm, and penetrations to be taped with Thermakraft White General Purpose Tape.
- Thermathene Black should be laid in a neat fashion with a smooth surface, with as many of the ripples as possible eliminated.
- Thermathene Black must be inspected for any damage (tears or pentrations) prior to concrete placement. Any damage must be repaired with Thermakraft White General Purpose Tape, for any larger damage a patch of Thermathene Black maintaining a 150mm lap.
- Thermathene Black must not be left exposed for more than 28 days.
- Thermathene must be installed by a licensed building practitioner.
- Thermathene Black may also be used to cover ground areas under suspended timber floors to prevent the rise of dampness. Ensure that the site is clear of rubbish, sharp edges such as rocks or bricks. Slit and patch around jack studs or pipe work. All penetrations and joints must be taped.

Handling and Storage

Thermathene Black must be handled with care to prevent damage, the product must be stored under cover well away from direct moisture, rainfall contact and sunlight (UV). Care should be taken not stack other materials on top of the product.

Thermakraft Limited / 0800 806 595

The recommendations contained in Thermakraft's literature are based on good building practice, but are not an exhaustive statement of all relevant information and are subject to any conditions contained in the Warranty. All product dimensions and performance claims are subject to any variation caused by normal manufacturing process and tolerances. Furthermore, as the successful performance of the relevant system depends on numerous factors outside the control of Thermakraft (for example quality of workmanship and design), Thermakraft shall not be liable for the recommendations in that literature and the performance of the Product, including its suitability for any purpose or ability to satisfy the relevant provisions of the Building Code, regulations and standards. Literature subject to change without notification. Latest documentation can be found on the website. E&OE.

Issue 1, November 2019



Thermakraft™

Product Data Sheet

COVERTEK 405

Self-supporting roof and wall underlay

Covertek 405 is a premium synthetic roof and wall underlay designed as a means of managing condensation, water vapour transfer and water ingress. It is self-supporting, stable and shrink resistant and can be installed in applications where the roof pitch is 3° and above.

Covertek 405 comes in three roll sizes:

1250mm wide	20m long	25m² Coverage[2]
1250mm wide	40m long	50m² Coverage[2]
2550mm wide[1]	29.4m long	75m² Coverage[2]

Cut to Length available – Contact your Thermakraft Representative.

1 **Note:** made to order.
2 **Note:** m² is the roll size for actual coverage, allow for laps and joins.

Smarter products. Better buildings.
thermakraft.co.nz

CodeMark GM-CM30030

BRANZ Appraised
Appraisal No.743 [2019]

Covertek 405

Self-supporting roof and wall underlay

Scope of Use

Roof Application

- Suitable with masonry tile, metal tile and profiled metal roof cladding.
- Suitable for timber or steel framed buildings.
- Can be used on roofs up to and including NZS 3604 'Extra High' wind zones.
- Self-supporting - Refer to installation guide regarding underlay support requirements.
- Not suitable for roof pitch less than 3 degrees.
- Will provide temporary weather protection during construction (maximum 7 days), same day coverage recommended.

Wall Application

- Can be used with timber and steel framing, either direct or in conjunction with an 18mm minimum drained cavity.
- Suitable with absorbent (e.g. timber, brick or fibre cement) or non-absorbent wall claddings (e.g. metal or plastic).
- Suitable with masonry veneer in accordance with NZBC Acceptable Solution E2/AS1 or NASH Building Envelope Solutions.
- Is suitable for use in Wind Zones of NZS 3604 up to and including 'Very High' when used as a standalone flexible underlay, and 'Extra High' when used as a flexible underlay over a rigid wall underlay.
- Is suitable as an air barrier in unlined wall spaces.
- Will provide some temporary weather protection during construction (maximum 60 days for wall application).

General

- Is fire retardant.
- Unaffected by LOSP or other solvent based treated timber. However, LOSP or other solvent based treated timber must have sufficient time for the solvent chemical to flash off in a well ventilated area. Recommended minimum 7 days.
- Tear resistant and strong.

Limitations

- Must NOT be exposed to the weather or UV for more than 7 days as a roof underlay and 60 days as a wall underlay.
- Must not be used under translucent sheeting.

Compliance

Roof Application

- Can be used as an underlay within the scope limitations of NZBC Acceptable Solution E2/AS1, Paragraph 1.1, with regards to building height and floor plan area.
- Or within the scope limitations of NASH Building Envelope Solutions, Paragraph 1.1 for steel framed buildings.
- Refer BRANZ Appraisal No 743 (2019) and CodeMark Certificate GM-CM30030 for full details.
- CodeMark Certification only covers roof application.

Wall Application

- Can be used as a wall underlay within the scope limitations of NZBC Acceptable Solution E2/AS1, Paragraph 1.1, with regards to building height andvfloor plan area.
- Or within the scope limitations of NASH Building Envelope Solutions, Paragraph 1.1 for steel framed buildings.
- Refer to BRANZ Appraisal No 743 (2019) for full details.

Flammability Index

Thermakraft Covertek 405 Underlay has an AS 1530 Part 2 Flammability Index of not greater than 5 and therefore meets the requirements of NZBC Acceptable Solutions C/AS2 to C/AS6, Paragraph 4.17.8 b), for the surface finish requirements of suspended flexible fabric used as an underlay to exterior cladding that is exposed to view in occupied spaces.

Durability

Meets the Performance Requirements of NZBC Clauses B2, Durability (B2.3.1 (a) 50 years, B2.3.1 (b) 15 years and B2.3.2), C3 Fire affecting areas beyond the fire source C3.4 (c) E2 External Moisture, and F2 Hazardous Building Materials F2.3.1/C, providing:

- It is not damaged.
- Is installed in accordance with instructions.
- Is not left exposed for more than 7 days (roof), same day coverage recommended.
- Is not left exposed for more than 60 days (wall)
- Is installed by or under guidance of Licensed Building Practitioners.
- Is compatible with cladding system used.*

* **Note:** specifiers and product users must test for roof cladding system compatibility with the underlay before installation.

Covertek 405

Self-supporting roof and wall underlay

Control of Condensation

In climatic regions where condensation risks are high, such as cold or high humidity areas, care needs to be taken in specifying the correct design and installation to prevent moisture build-up in the roof cavities.

Factors which adversely affect the condensation risk in roofing systems include:

- Humid, and/or cold climatic regions.
- Warm/Skillion roof construction.
- Low roof cavity air volume and restricted air movement.
- Omitting Vapour Control Layers.
- Occupancy activities which have high moisture loading on conditioned spaces.
- Ceiling penetrations and entry of warm air into roof cavities.
- Low pitched roof.
- Bulk insulation.
- Building structures ability to naturally dry construction moisture.

Skillion and Warm Roof Construction are particularly sensitive to moisture accumulation and the design and installation of roof construction needs to take into account the higher condensation risks. Refer to the NZ Metal Roof and Wall Cladding Code of Practice (COP) for details.

For passive ventilation of the roof space, it is recommended that all roof underlays are terminated at the ridge, and if not it should be slit or slotted to allow for passive ventilation. For further information refer to the NZ Metal Roof and Wall Cladding COP.

Property Performance

NZBC E2/AS1 Table 23 (NZS2295) Wall Underlay Properties	Absorbency	Vapour Resistance	pH of Extract	Shrinkage	Water Resistance	Air Resistance
Property Performance Requirement	≥ 150gsm	≤ 0.5 MN.s/g	≥ 5.5 and ≤ 8	≤ 0.5%	≥ 100mm	≥ 0.1 MN.s/m3
Property Performance	Pass	Pass	Pass	Pass	Pass	Pass*

* **Note:** Can be used as an air barrier.

Product Warranty

Standard Thermakraft warranty applies. Refer to Thermakraft Warranty Statement for further details. This is available online at **thermakraft.co.nz** or call **0800 806 595.**

Thermakraft Limited / 0800 806 595

Smarter products. Better buildings.

thermakraft.co.nz

CodeMark GM-CM30030

BRANZ Appraised
Appraisal No.743 [2019]

The recommendations contained in Thermakraft's literature are based on good building practice, but are not an exhaustive statement of all relevant information and are subject to any conditions contained in the Warranty. All product dimensions and performance claims are subject to any variation caused by normal manufacturing process and tolerances. Furthermore, as the successful performance of the relevant system depends on numerous factors outside the control of Thermakraft (for example quality of workmanship and design), Thermakraft shall not be liable for the recommendations in that literature and the performance of the Product, including its suitability for any purpose or ability to satisfy the relevant provisions of the Building Code, regulations and standards. Literature subject to change without notification. Latest documentation can be found on the website. E&OE.

Issue 5, September 2020

Roof Safe Mesh Galvanised Steel

Product Technical Statement

SUMMARY OF FEATURES

- A welded galvanised steel wire mesh used as a support for roofing underlays and insulation. It also provides a safety net against falls during initial roof installation and for ongoing maintenance work.
- Suitable for both timber and steel structures.
- Complies with Safety Mesh Standard AS/NZS 4389: 2015.

TECHNICAL INFORMATION

Product Description

Kiwimesh Roof Safe Mesh consists of a welded, mild steel wire mesh with longitudinal wires spaced at 150mm centres and cross wires spaced at 300mm centres.

It is comprised of a 2.0mm diameter galvanised wire with a tensile strength exceeding 450mpa. T

Applications

- Provides fall-through protection during roof installation and ongoing maintenance.
- Suitable for use on timber and steel framing.

Technical Data

Complies with Safety Mesh Standard AS/NZS 4389: 2015:

Limitations

Not to be used for access or as a working platform.

Handling & Storage

Rolls must be stored on end, under cover and protected from moisture. Do not double stack or use to support other materials. Rolls must not be stored on concrete floors for long periods.

Size Range Available

Fixing instructions

Before installation check with the local code of practice for safe work on roofs.

Transverse wires shall be on top of the longitudinal wires.

All longitudinal wires are passed around anchor points with the tail of each wire being twisted four times around the main portion of the same wire.

End joints in wire, two transverse wires are placed together, the longitudinal tail wires (approx 300mm long) are tied around each other, one being twisted four times around the main portion of the same wire, the other longitudinal wire twisted once around the main portion of the same wire then four times around two transverse wires.

Side laps (i) For purlin spacing/span less than 1200mm, the runs of mesh shall be side-lapped by a minimum of one mesh spacing (150mm). (ii) For purlin spacing/span between 1200-2200mm, the runs of mesh shall be side-lapped by a minimum of one mesh spacing (150mm). Side laps shall be secured with ring fasteners fabricated from minimum 1.90mm diameter wire, or equivalent, fitted at maximum 900mm centres between each purlin on one side of the lap. (iii) For purlin spacing/span greater than 2200mm, the runs of mesh shall be side-lapped by a minimum of two mesh spacing (300mm). Side laps shall be secured with ring fasteners fabricated from minimum 1.90mm diameter wire, or equivalent, fitted at maximum 600mm centres between purlin/span on both sides of the lap.

Tautness. Mesh shall be pulled taut to ensure only natural sag between each purlin or roof member.

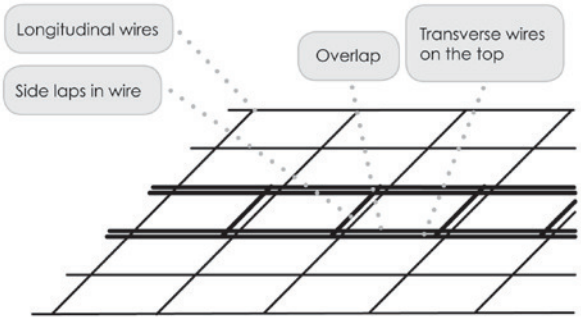

End joints

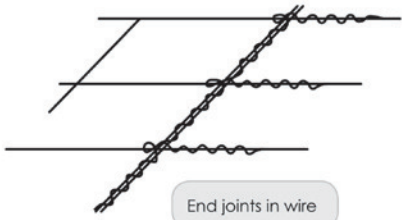

End joints in wire

Steel and timber purlins

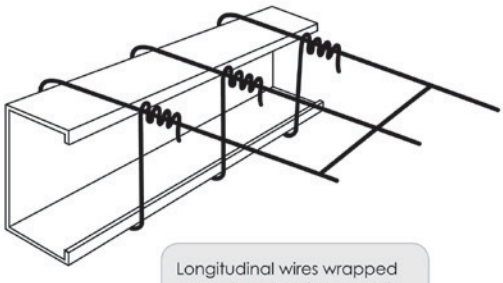

Longitudinal wires wrapped around steel or timber purlin.

Steel purlins

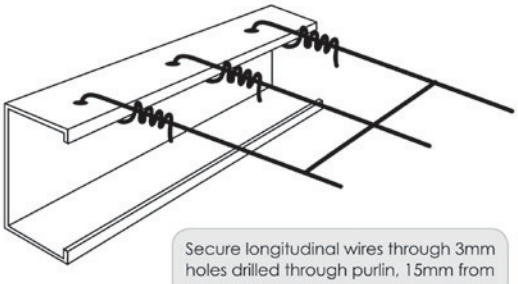

Secure longitudinal wires through 3mm holes drilled through purlin, 15mm from the edge.

Timber purlins

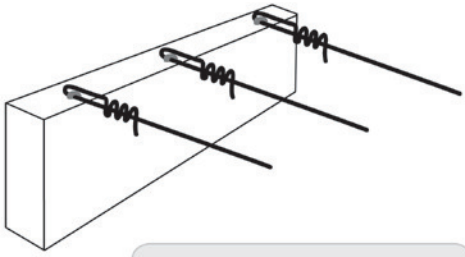

Secure longitudinal wire in position with 40mm long x 3.15mm diameter staples.

KIWIMESH

PAUL Industries

Wall Sheeting

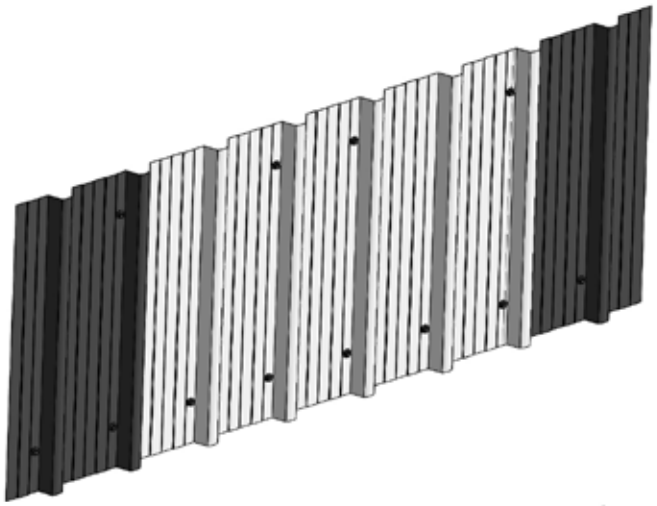

WS1

6 Rib

The cladding for wall sheeting shall be fixed with Cladding Hex Tek #10x16 with neo washers to all walls. On middle girts tek beside every join then miss one, place two. On bottom / top girts tek every pan.

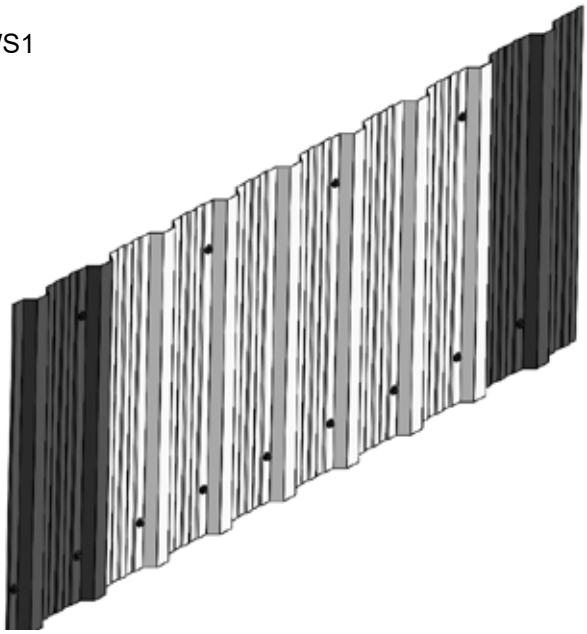

WS2

7 Rib

The cladding for wall sheeting shall be fixed with Cladding Hex Tek #10x16 with neo washers to all walls. On middle girts tek beside every second rib. On bottom / top girts tek every pan.

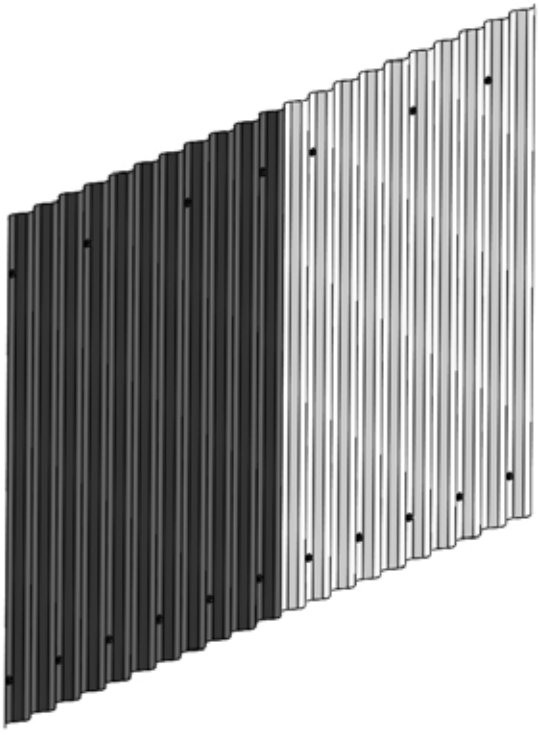

WS3

Corrugate

The cladding for wall sheeting shall be fixed with Cladding Hex Tek #10x16 with neo washers to all walls. On middle girts tek beside every join then miss two, tek one, miss three, tek one. On bottom / top girts tek every second pan.

Roof Sheeting

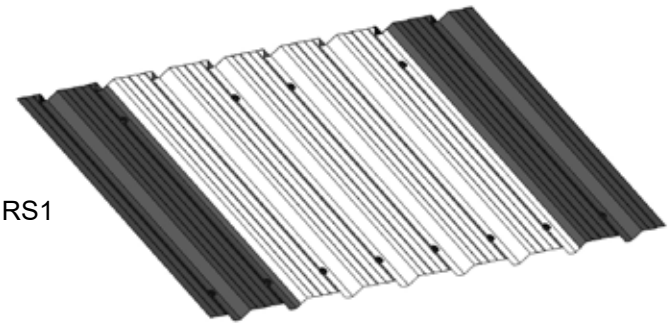

RS1

6 Rib

The cladding for roof sheeting shall be fixed using Cladding Hex Tek #12x45 to all purlins, except the ridge purlin, and extend 50mm into the gutter.

On middle purlins tek rib on every join then miss one, place two. On gutter purlin tek every rib.

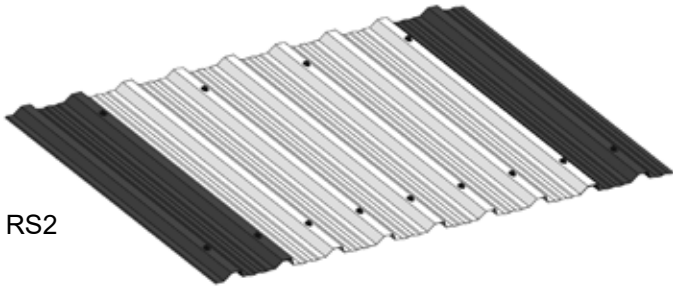

RS2

7 Rib

The cladding for roof sheeting shall be fixed with Cladding Hex Tek #12x35 to all purlins, except the ridge purlin, and extend 50mm into the gutter.

On middle purlins tek every second rib. On gutter purlins tek every rib.

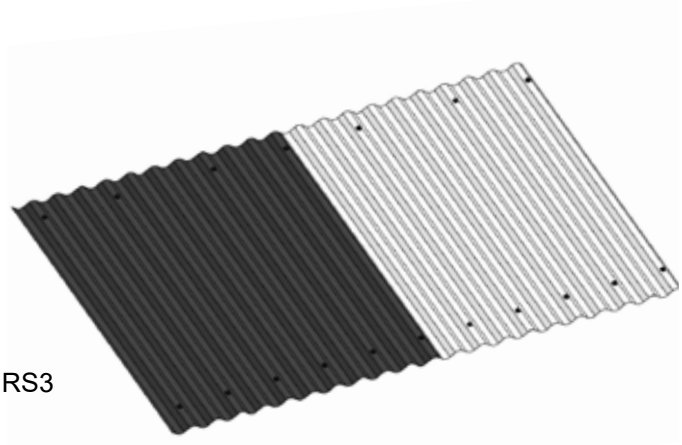

RS3

Corrugate

The cladding for roof sheeting shall be fixed with Cladding Hex Tek #12x35 to all purlins, except the ridge purlin, and extend 50mm into the gutter.

On middle purlins tek on rib at every join then miss two, tek one, miss three, tek one. On gutter purlins tek every second rib.

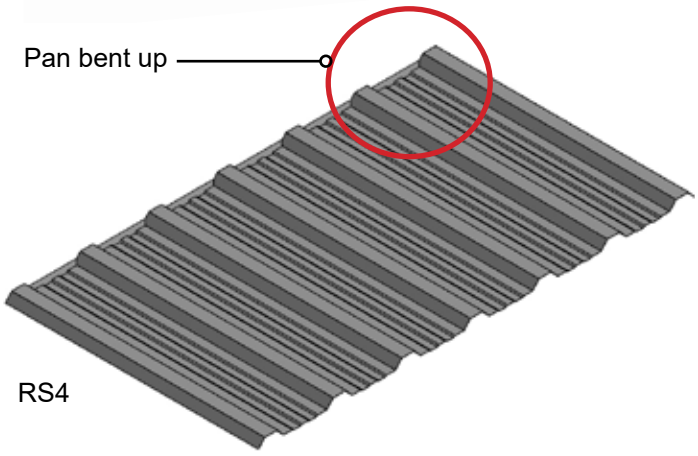

RS4

Pan Detail to Ridge

Roof Sheeting to have pans bent up, as shown, to ridge end. Use a crescent if no suitable bending tool is available.

Translucent Sheet Fixing Details

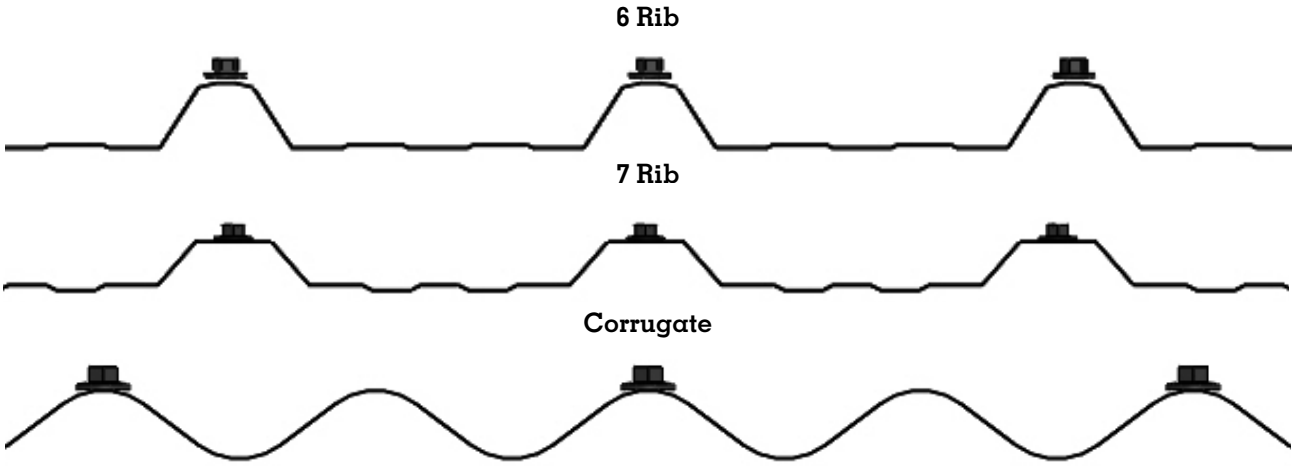

Where wire safety mesh is incorporated under the translucent roof sheeting and where the safety mesh passes over the supporting purlin directly under the fiberglass sheeting, a Protective Purlin Strip (flat fiberglass strip of minimum 1.1mm thickness) must be installed between the translucent sheeting and the safety mesh.

Inseal foam infill to be installed on top of the translucent sheet at the ridge top and ridge fastened over this to provide additional weather sealing.

Site Laps

Each individual translucent sheet is manufactured to overlap and be supported by the adjacent roof or wall cladding sheet.

Fastening Procedure

- In roofing applications, fixings shall be installed through the crest of any profile. Due to the larger expansion and contraction rates of translucent sheeting, oversized fixing holes must be predrilled. Installers must ensure that the fastener is located in the centre of the oversize hole or the benefit of the larger hole is lost. The recommended calculation to ensure the correct hole size used is - 0.75mm per lineal metre, plus the shank size of the fastener. This should be: 7.84 (sheet length) x 0.75=5.88 + 4.5mm (shank size of translucent tek) = 10.38mm 10.5mm holes to be drilled for a 15m span building
- Install screws into translucent sheet in the same manner as metal
- When completed, remove fixings from translucent sheet.
- Using the existing screw hole as a guide, re-drill over sizing the hole
- Re-install the fixing screw. (Note how the screw is centrally located in the hole.)
- It is important not to over tighten the screw putting undue pressure on the translucent sheet. Use only enough pressure that that the translucent fixing screw seal is contoured to the shape of the rib but the rib retains its shape without any sign of buckling.

Note – Top washer is too tight, bottom washer is ok.





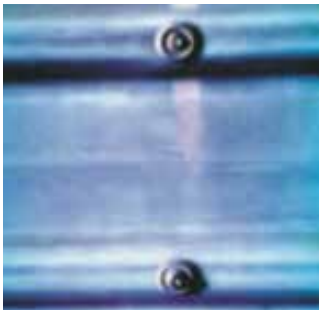

Translucent Sheet Fixing Details contd.

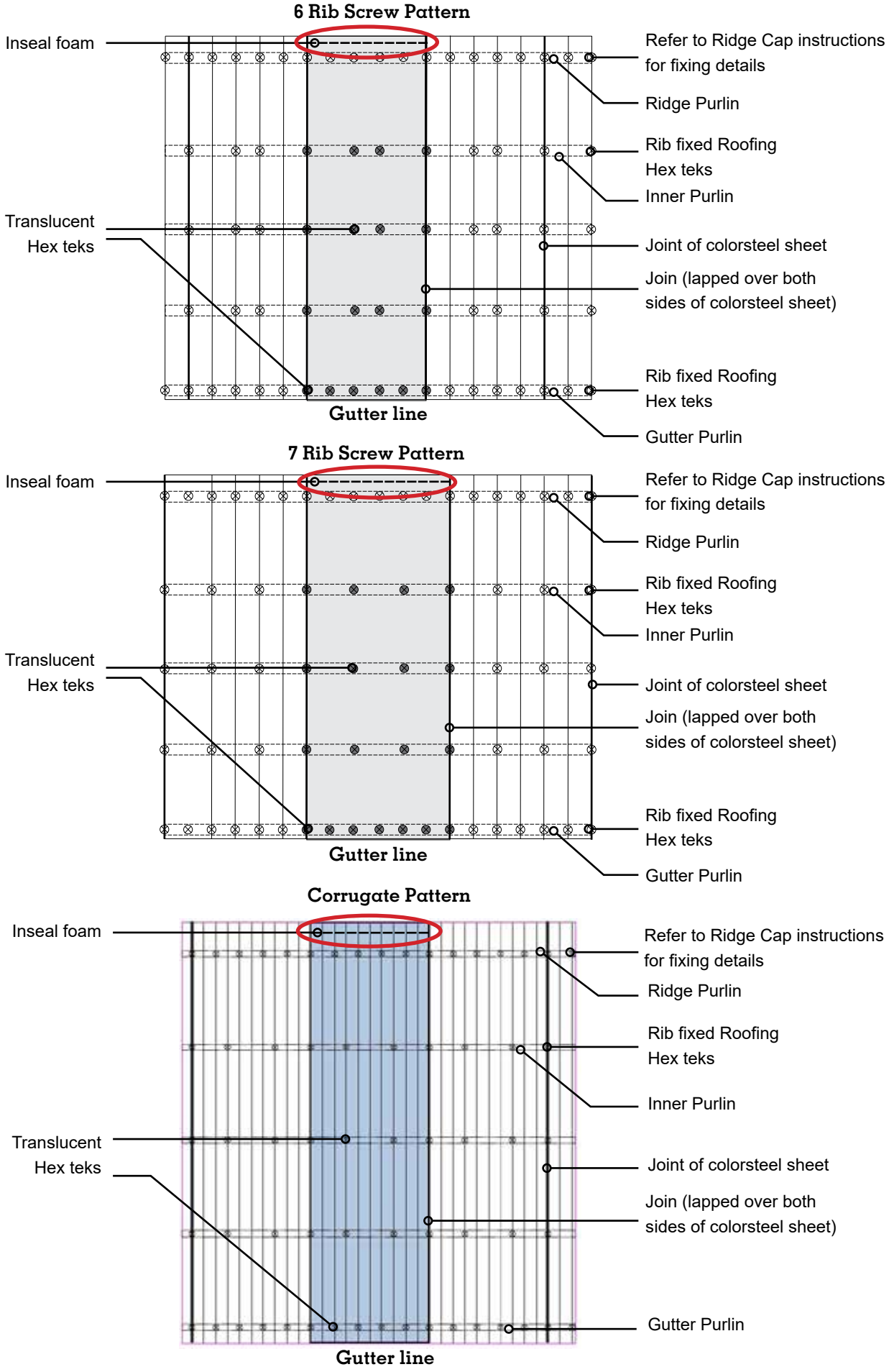

Sediment Control Management Plan

Date: 15/4/2025

Client: Cameron Project

Address: 7 Swindon Lane, Amberley

This erosion and sediment control plan has been prepared in accordance with Environment Canterbury's Builders Pocket Guide (BPG) and Erosion and Sediment Control Guidelines (2007). For more information and guidance on good practice requirements please refer the Builders Pocket Guide website (www.bpg.co.nz).

We propose to manage erosion on the site in the following ways:

- The site is only excavated for the foot print of our building; the rest of the site will remain undisturbed.

" The drive is used for access to and from the site.

- Our buildings are relatively quick to build so the site is kept tidy and rubbish free at all times.

- Our company has instructed our concrete supplier to clean all trucks on site within a bunded area.

- Our contract manager will also assess the site for sediment control before works begin to ensure appropriate measures are in place.

Totalspan Stormwater Management Plan

Date: 15/4/2025

Client: Cameron Project

Address: 7 Swindon Lane, Amberley

ROOF AREA OF TS BUILDING: 28m2

GUTTER PROFILE:



PLAN:

The stormwater management plan is to run the 2 x 80mm downpipe into a 100 mm uPVC stormwater pipe and go at 1:100 fall into a soak pit as indicated on the site plan.

Thank you.

SOAK PIT DETAILS

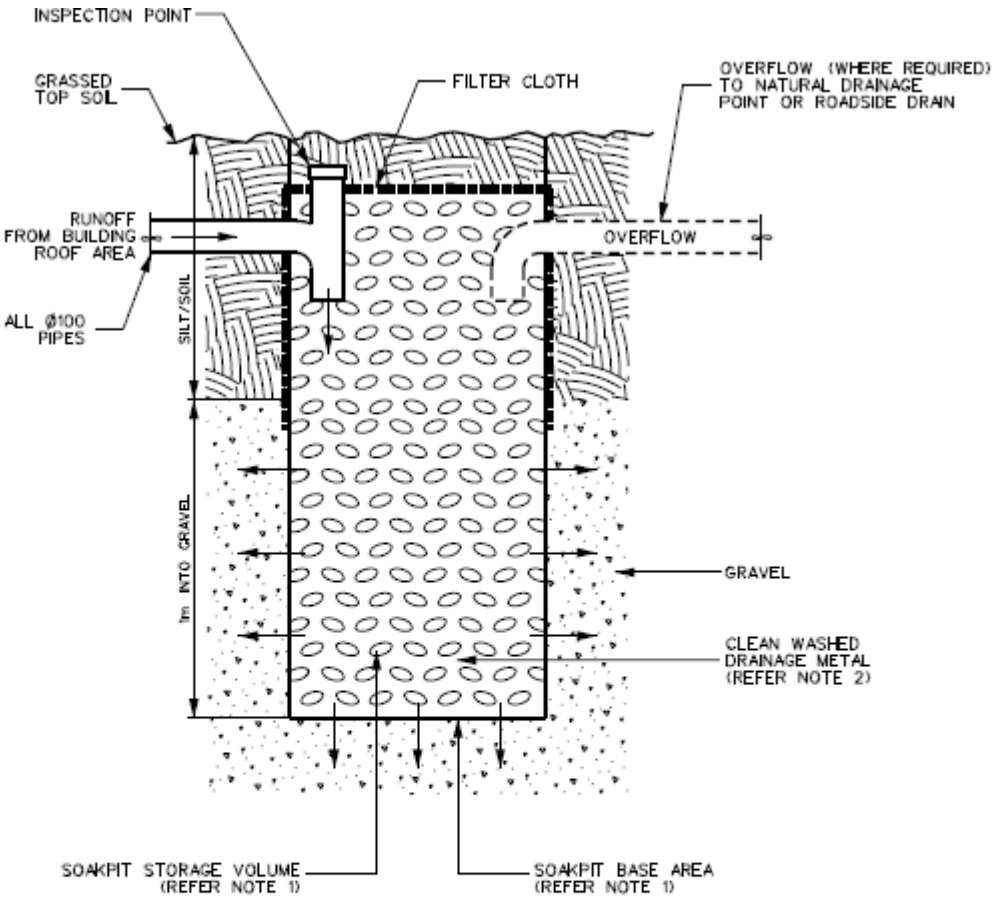

NOTES:

1. SOAK PIT SIZING - PROVIDE 1m² OF BASE AREA PER 100m² OF ROOF AREA AND 2m³ OF STORAGE VOLUME PER 100m² OF ROOF AREA (ALLOW 0.38 FACTOR FOR VOID SPACE) OR ALTERNATIVELY PROVIDE FULL DESIGN CALCULATIONS IN ACCORDANCE WITH VERIFICATION METHOD E1/VM1 SECTION 9.
2. CLEAN WASHED DRAINAGE METAL - TO BE EITHER TAILINGS 20mm-40mm, ROUNDS 40mm-65mm, BOULDERS 65mm-120mm, ROCKS 100mm-150mm OR SIMILAR.

Figure 7: Bedding and backfilling
Paragraphs 5.2.1, 5.3.1 and 5.4.1

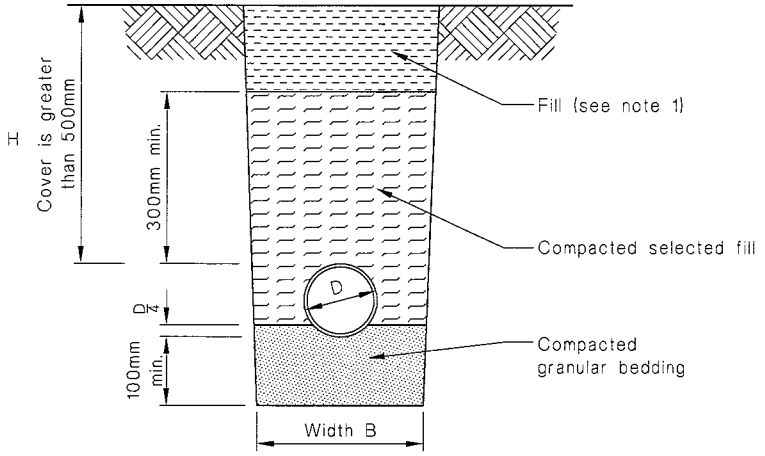

(a) Bedding type 'B' of NZS 7643
Cover greater than 500mm

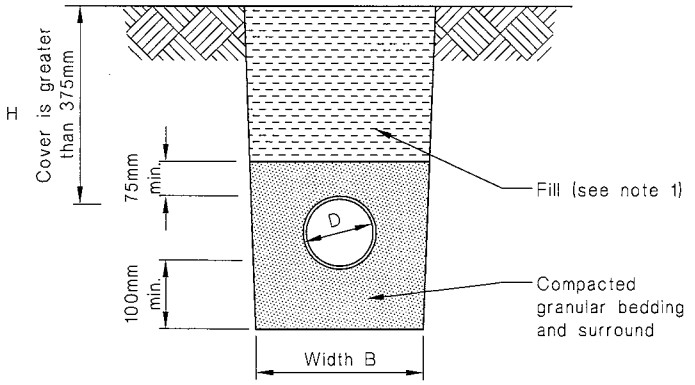

(b) Bedding type 'D' of NZS 7643
Cover greater than 375mm

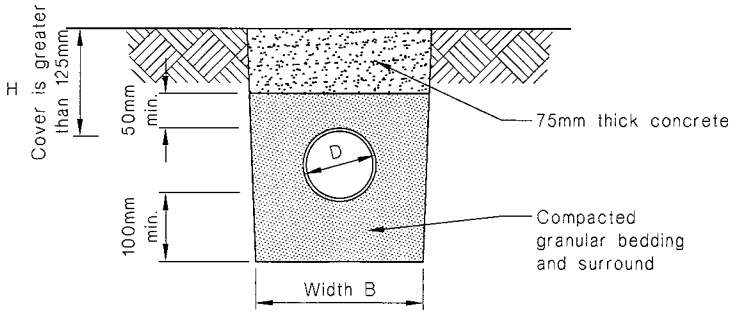

(c) Cover between 125mm and 375mm

NOTE:
1. Fill shall be:
-Ordinary fill where drains are located below gardens and open country.
-Compacted selected fill where the drains are located below residential driveways and similar areas subject to light traffic.

Gable Range
Producer Statement and Structural Details
(IL1 Non-Habitable, Unlined)

INDEX:

1	Contents
2	Producer Statement
3	Specifications
4	Durability Statement
5	Site Plan
6-11	Engineering Tables
12	Foundation Details SD-F01
13	Foundation Details SD-F02
14	Frame Details SD-P01
15	Major Openings SD-M01
16	Minor Door Openings SD-M05
17	Bracing Details
18	Flashing Details
19	Flashing Detail SD-E01

CLIENT:

Don Campbell
7 Swindon Lane
Amberley
CAN
7410

BUILDING:

System Ref Code:	JH.309 (v3.3.2.15)
Location:	Lat: -43.146309 Lng: 172.730994
Wind Speed: Vdes Θ:	34.22 m/s
Snow Loading:	Sg = 0.9 kPa
Span:	4.000m
Length:	7.000m
Knee Height:	2.400m
Bay Size:	2x3.500m
Roof Pitch:	15°
Roofing Sheet:	7-Rib 0.35mm
Cladding Sheet:	7-Rib 0.35mm
Downpipe Type:	80mm Coloursteel
Floor Type:	Concrete Slab
Area:	Total 28.0m²

NOTES :

1 - Contractor to confirm all dimensions on site at time of construction
2 - These drawings must not be reproduced without express permission from Spanbild New Zealand Limited.

TOTALSPAN
A Division of Spanbild New Zealand Ltd
112 Waterloo Road, Hornby
P.O.Box 11-013, Christchurch Details

SPANBILD
DESIGN. MANUFACTURE. BUILD.

PRODUCER STATEMENT – PS1
DESIGN

BUILDING CODE CLAUSE(S): B1 **JOB NUMBER:** JH.309
ISSUED BY: Spanbild NZ Ltd
(Engineering Design Firm)
TO: Totalspan North Canterbury
(Owner/Developer)
TO BE SUPPLIED TO: Hurunui District Council
(Building Consent Authority)
IN RESPECT OF: 4.000m span x 7.000m length; IL1 portal building; DL=50yrs
(Description of Building Work)
AT: 7 Swindon Lane, Amberley, 7410, CAN
(Address, Town/City)
LEGAL DESCRIPTION: **N/A**

We have been engaged by the owner/developer referred to above to provide *(Extent of Engagement)*:
Structural Design as shown on sheets 1, 2, 5-16
in respect of the requirements of the Clause(s) of the Building Code specified above for all, as specified in the Schedule, of the proposed building work.

The design carried out by us has been prepared in accordance with:

- ✔Compliance documents issued by the Ministry of Business, Innovation & Employment *(Verification method/acceptable solution)* B1/VM1, B1/VM4 and/or;
- Alternative solution as per the attached Schedule.

The proposed building work covered by this producer statement is described on the drawings specified in the Schedule, together with the specification, and other documents set out in the Schedule.

On behalf of the Engineering Design Firm, and subject to:

- Site verification of the following design assumptions:
- All proprietary products meeting their performance specification requirements;

I believe on reasonable grounds that:

- the building, if constructed in accordance with the drawings, specifications, and other documents provided or listed in the Schedule, will comply with the relevant provisions of the Building Code and that;
- the persons who have undertaken the design have the necessary competency to do so.

~~I recommend the **N/A** level of **construction monitoring.**~~

I, *(Name of Engineering Design Professional)* Ryan Moreau , am:

- ✔CPEng number 1013731

and hold the following qualifications BE(Hon), CPEng, CMEngNZ

The Engineering Design Firm holds a current policy of Professional Indemnity Insurance no less than $200,000
The Engineering Design Firm is a member of ACE New Zealand.

SIGNED BY *(Name of Engineering Design Professional)*: Ryan Moreau

ON BEHALF OF *(Engineering Design Firm)*: Spanbild NZ Ltd Date:14-04-2025

Note: This statement has been prepared solely for the Building Consent Authority named above and shall not be relied upon by any other person or entity. Any liability in relation to this statement accrues to the Engineering Design Firm only. As a condition of reliance on this statement, the Building Consent Authority accepts that the total maximum amount of liability of any kind arising from this statement and all other statements provided to the Building Consent Authority in relation to this building work, whether in tort or otherwise, is limited to the sum of $200,000.

This form is to accompany **Form 2 of the Building (Forms) Regulations 2004** for the application of a Building Consent.

SCHEDULE TO PS1

The proposed building work covered by this producer statement is described on the drawings with project reference and sheet numbers on the PS1

The specifications, durability statement and maintenance requirements are set out in the drawings.

Alternative Solutions apply for areas that the potential for liquefaction or lateral spread has been identified as it is outside B1/VM4. The alternative solutions are MBIE guidance documents "Planning and engineering guidance for potentially liquefaction prone land" and "Repairing and re-building houses affected by the Canterbury Earthquakes"

The foundations require suitable soils. This IL1 foundation (generally unlined) has been designed for;

- Geotechnical Ultimate Bearing Capacity of 225 kPa,
- Where there is no potential for liquefaction or lateral spread or
- Liquefaction Vulnerability where liquefaction damage is unlikely (very low or low liquefaction vulnerability),
- Non-expansive soils.

- Indications of local instability,
- Foundations closer than 3 x height of a bank plus 0.6 m measured from the foot of the bank, and the length of the flat at the base of the bank is a minimum of 4 times the height of the bank,
- Slope steeper than 5 degrees away from the building platform.
- Buried organic topsoil, peat, soft clays, buried services or expansive clays, any fill that does not have a certificate of suitability issued in accordance with NZS 4431

TOTALSPAN®
STEEL BUILDINGS

Project Ref: JH.309

© Copyright 2017 Spanbild NZ Ltd. All rights reserved.

Don Campbell
7 Swindon Lane
Amberley
7410
021 1521186

Gable Range - Design

Producer Statement

SPECIFICATIONS

GENERAL NOTES

1. IMPORTANT DESIGN LIMITATIONS

1.1. Design limitations apply to any item or alteration not specifically stated or clearly represented within the scope of these engineering specifications. This is a CAD drawing which must not be altered by manual methods, exceptions to this are:

1.1.1. The documentation clearly states where "generic" items can be crossed out, or the applicable detail circled to provide clarity.

1.1.2. Additional specific design has been carried out by a CPENG engineer with a PS1 supplied covering "part" design works for any ammedment/alterations. Alternative/Additional drawings shall be supplied or these specifications must be clearly marked up in red pen and accompanied by the PS1 engineer's signature on each drawing altered which is covered by the additional specific design, as above.

1.1.3. A letter has been supplied in writing, signed by the original engineer(s) covering "minor" ammedments/alterations or clarifications to varying interpretations of the design drawings.

1.2. Habitable/Lined Buildings are not covered within this scope of work.

2. GENERAL

2.1. All work shall conform to the New Zealand Building Code

2.2. B2 Durability shall be covered by respective product/manufacturers durability statements

3. LOADINGS

3.1. Buildings are designed to AS/NZS 1170

3.1.1. Refer Schedule for Windspeed, Vdesθ in m/s.

3.1.2. Refer Schedule for Ground Snow Load if applicable in kPa.

3.1.3. The roofing is not designed for point loads of 1.1kN, these are Surfaces (including transparent surface) over which supports (e.g., boards or ladders) are required to be laid to support actions incidental to maintenance (e.g., people).

3.1.4. Earthquake loads, except for "near fault" locations due to the light-weight structure are not critical for unlined, Importance Level 1 & 2 standard structures with cladding as specified below only.

3.1.5. Habitable/Lined or Importance Level 3 and greater structures require specific design engineering in addition to this specification covering the scope of works. (Importance Level 2 structures have been designed to resist "structural damage" deflections only).

3.1.6. Any loads exceeding the above shall require specific design engineering in addition to this specification covering the scope of works.

4. FOUNDATIONS

4.1. Ground shall have a safe bearing capacity of at least 75kPa (225kPa Ultimate).

4.1.1. This is achieved by meeting "good ground", safe bearing capacity of at least 100kPa in accordance with NZS 3604 (i.e. exceeds the above) OR;

4.1.2. Safe bearing capacity of at least 75kPa by Site Specific Geo-Technical Report (as NZS 3604 has no means of determining a minimum safe bearing of 75kPa).

5. CONCRETE

5.1. Designed to NZS 3101

5.2. Remove vegetation and loose material from the building footprint, backfill with compacted hard-fill if required and lay sand blinding to the underside of the concrete slab. Ensure the surface of the slab will be at least 100mm above the highest level of cleared ground around the slab.

5.3. Concrete shall have a maximum aggregate size of 20mm and minimum 20MPa compression strength at 28 days.

5.4. Refer Foundation Details for further details.

5.5. Lesser Ductile Mesh is allowed to be used for Importance Level 1 structures only

5.5.1. Refer NZS 3101 Clause 5.3.2.7 (a)

6. STEELWORK & COMPONENTS

6.1. Boxed Sections

6.1.1. Shall be fixed through flange centres within 100mm from the end and at @ 600mm centres max. (+50mm tolerance) using #10 Self-Drilling Screws. Excludes exterior flanges of Girts & Purlins (as cladding teks provide fastening).

6.2. All Steelwork & Components shall (where applicable) conform to:

6.2.1. AS/NZS 4600 - Cold-formed steel structures

6.2.2. AS/NZS 1252 - High strength steel bolts with associated nuts and ...

6.2.3. AS/NZS 1365 - Tolerances for flat-rolled steel products

6.2.4. AS/NZS 4505:2013 - Garage doors and other large access doors

6.2.5. AS 1110 - ISO metric hexagon bolts and screws

6.2.6. AS 1112 - ISO metric hexagon nuts...

6.2.7. AS 1397 - Continuous hot-dip metallic coated steel sheet and strip

6.2.8. AS 1580 - Paints and related materials - Methods of test

6.2.9. AS 3566 - Self-drilling screws for the building and construction industries

6.2.10. AS 4291.1 - Mechanical properties of fasteners made of carbon steel and ...

6.2.11. IFI-114(Imperial) / IFI-505(Metric) - Break Mandrel Blind Rivets

7. CLADDING

7.1. Roof and Wall Sheeting shall be 0.35 - 0.55 B.M.T, AZ150 Coating, G550 Steel only. Alternative claddings (excluding glass reinforced panel), require an independent specific design certificate for the scope of work.

7.2. Fixing pattern as per E2/AS1 or NZ MRM - NZ Metal Roof and Wall Cladding Code of Practice.

7.3. Flashings shall be fixed as per manufacturers recommendations/instructions.

8. SERVICES

8.1. Penetrations through framing members

8.1.1. Typical hole diameter(s) shall not exceed 29mm (1 ⅛ inch)

8.1.1.1. A single 44mm (1 ¾ inch) hole per C150, C250 or C300 section only is allowed to accommodate an up to 40mm waste water pipe

8.1.2. Distance between holes along the section shall be no less than 1000mm

8.1.3. Holes shall be located:

8.1.3.1. Central in the web, (within the centre 1/3 of the web depth)

8.1.3.2. At least 200mm from the end of a member

8.1.4. Rubber grommets to be applied to un-swaged service holes

8.1.5. Larger and more frequently spaced holes are allowed, however please consult with an engineer first for written approval to ensure compliance with AS/NZS 4600.

TOTALSPAN®
STEEL BUILDINGS

Project Ref: JH.309

© Copyright 2017 Spanbild NZ Ltd. All rights reserved.

Don Campbell
7 Swindon Lane
Amberley
7410
021 1521186

Gable Range - Design

Specifications

MANUFACTURERS STATEMENT - DURABILITY

Cladding

To satisfy the requirements of Clause B2:"Durability" of the NZBC and to ensure the cladding material meets a 15-year durability life and a 50 year intended working life (design life), the following requirements must be followed:

Cladding Range of Product and Use

- Coating Type: Zinc/Aluminium & Painted (Coloured Steel).
- Steel thickness range: 0.35mm - 0.55mm BMT
- Steel grade range: G300 - G550
- Application: Standard Totalspan Roof and Wall Cladding
- Profile: Totalspan 7 Rib, Totalspan 6 Rib, Totalspan Corrugate

Requirements

- Fixing and installation of the cladding must be done exactly in accordance with the manufacturer's instructions and specifications.
- Normal maintenance must be regularly carried out on the exterior surface of the cladding and visible internal surfaces of the cladding.The following guide must be followed to ensure the durability requirements are met.

Normal Maintenance

- Normal Maintenance to be completed in accordance with Durability - Acceptable Solution B2/AS 2.1.3
- Corrosion Zones C1 and C2 (Reference SNZ TS 3404:2018, Durability requirements for steel structures and components, corrosivity zone maps, Figure 1 – 7, page 10 – 16)

  Rain-washing only required on exposed (open to airborne salts and rain wetting) material. Sheltered (open to airborne salts, but not rain washed) or protected areas such as under spouting, top-cladding sheets and tops of doors and underside of Awnings and Garaports require washing every 3 months.

- Corrosion Zones C3 and C4 (Reference SNZ TS 3404:2018, Durability requirements for steel structures and components, corrosivity zone maps, Figure 1 – 7, page 10 – 16)

  Rain-washing only required on exposed (open to airborne salts and rain wetting) areas. Sheltered (open to airborne salts, but not rain washed) and protected areas such as under spouting, top cladding and tops of doors and underside of Awnings and Garaports require washing down every month and whenever corrosive salts are present.

Extended Maintenance, Painting or Repainting

Extended Durability

Once the metallic coating or the paint system has weathered away, signs of red rust for bare material or signs of the metallic coating for painted material, painting of the entire surface is required to extend the life of the cladding product. Paint manufacturers recommendations are to be followed for surface preparation and paint type to be used.

Evident Corrosion

- Areas that show signs of white or red rust/corrosion (typically in unwashed areas) require cleaning back with a stiff brush and cleaner to remove all dust, surface contaminants and corrosion products and present a sound substrate for painting. Priming of the surface and application of two coats of paint as per the Paint Manufacturer's recommendations is then required.
- Particular attention needs to be paid to laps (side, end, flashing etc) where earlier corrosion may start due to moisture and dirt entrapment.

  If evident corrosion is not treated quickly rapid deterioration of the sheet may occur which could result in perforation. At this stage replacement of the affected sheet is the best option.

Steel Framing

To satisfy the requirements of Clause B2:"Durability" of the NZBC and to ensure the structural framing material meets a 25-year durability for carports and a 50-year durability for all other buildings, the following requirements must be followed:

Steęl Framing Range of Product and Use

- Coating Type: Galvanised
- Steel thickness range: 0.55mm – 3.0mm BMT
- Steel grade range: G300 – G550
- Application: Standard Totalspan Purlins, Girts, Portal Frames, Door Jambs, Wall Uprights, Bridging, Posts

Profile:
C Sections – C80 to C300
Z Sections – 100x53, 150x65
Tophat Sections – 100x163, 120x170, 150x183
Square Hollow Sections - 65x65, 75x75

Requirements

- Regular inspections of the steel work and maintenance at the first signs of a problem will extend the durability of the sections.
  Where sections are exposed (open to airborne salts and rain wetting) or sheltered (open to airborne salts but not rain washed), or located in salt marine, corrosive industrial or unusually high corrosive enviromentsthe below Normal Maintenance must be adhered to. Please contact your local Totalspan branch for specialist advice if unsure requirements.
  This also applies to all Steelwork that is exposed to the wind but is protected from the rain located in an open sided structure such as carports, awnings or structures closed in on one side only.
  Maintenance is necessary when the Galvanised coating ceases to provide sacrificial protection to the steel base, or where the appearance is no longer aesthetically acceptable. At the first sign of corrosion or rust staining, the surface should be treated and painted with an appropriate coating system. All maintenance should be carried out in accordance with AS/NZS 2312:2002 (Incorporating Amendment No. 1) [c] and New Zealand Steelwork Corrosion Coatings Guide (HERA Report R4-133) [d].

Normal Maintenance

- Normal Maintenance to be completed in accordance with Durability - Acceptable Solution B2/AS 2.1.3

-Corrosion Zones C1 and C2 (Reference SNZ TS 3404:2018, Durability requirements for steel structures and components, corrosivity zone maps, Figure 1 – 7, page 10 – 16)

Rain-washing only required on exposed (open to airborne salts and rain wetting) sections.
Sheltered (open to airborne salts, but not rain washed)sections require washing every 3 months. All other materials should be inspected at the time of washing and if required, cleaned of any contaminants.

-Corrosion Zones C3 and C4 (Reference SNZ TS 3404:2018, Durability requirements for steel structures and components, corrosivity zone maps, Figure 1 – 7, page 10 – 16)

Rain-washing only required on exposed (open to airborne salts and rain wetting) sections
Sheltered (open to airborne salts, but not rain washed)sections require washing down every month and whenever corrosive salts are present. All other materials should be inspected at the time of washing and if required, cleaned of any contaminants.

Manufacturer:

Spanbild New Zealand Limited
112 Waterloo Rd
Sockburn
CHRISTCHURCH

TOTALSPAN®
STEEL BUILDINGS

Project Ref: JH.309

© Copyright 2017 Spanbild NZ Ltd. All rights reserved.

Don Campbell
7 Swindon Lane
Amberley
7410
021 1521186

Gable Range

Durability Statement

TOTALSPAN®

STEEL BUILDINGS

Project Ref: JH.309

© Copyright 2017 Spanbild NZ Ltd. All rights reserved.

Don Campbell
7 Swindon Lane
Amberley
7410
021 1521186

Gable Range

Site Plan

ROOF - (BAYS 2-1)

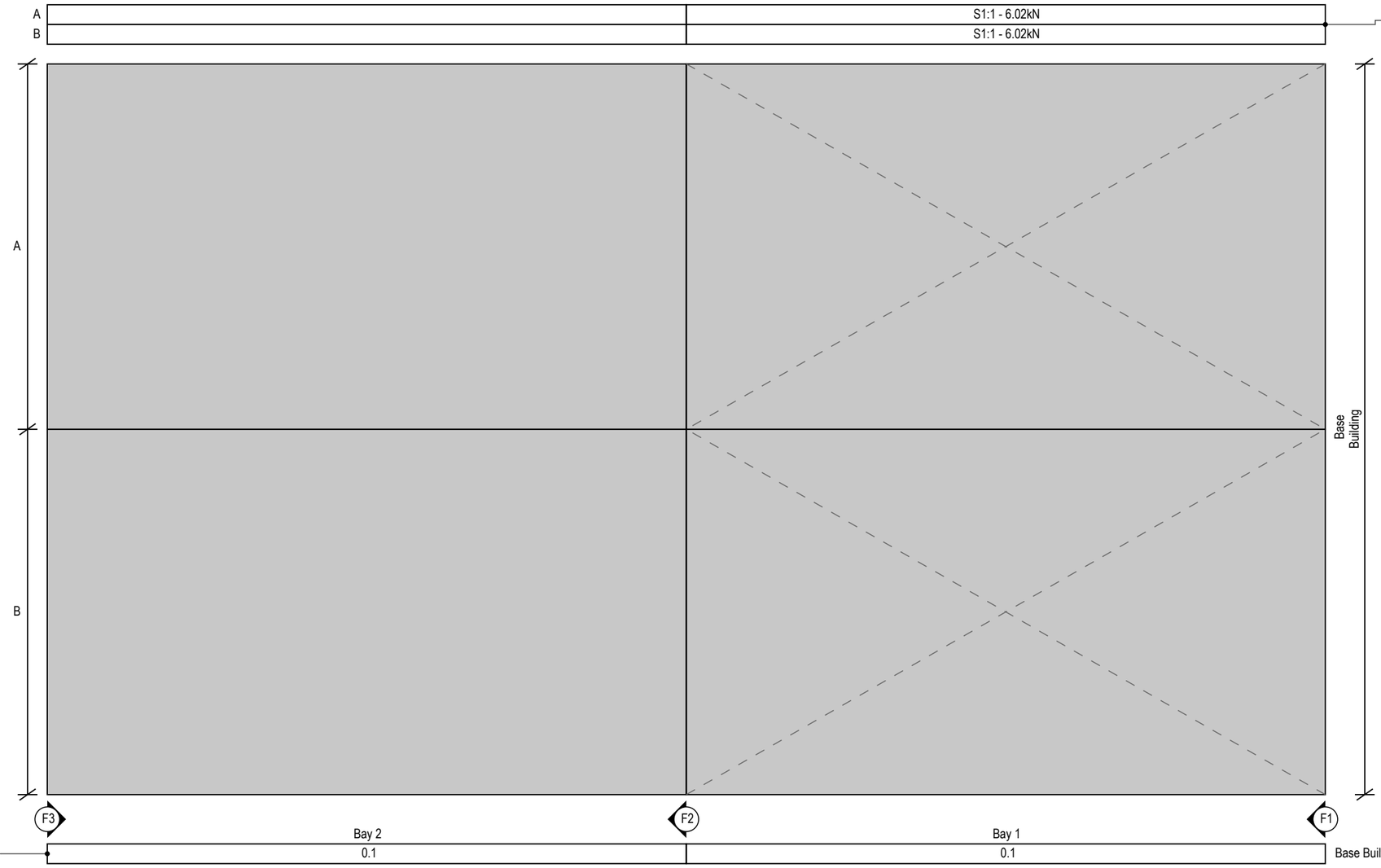

BRACING kN (Totals)		
Location	**Required**	**Achieved**
A	0.93 kN	6.02 kN
B	0.93 kN	6.02 kN

FRAMING SECTION TABLES	
Base Building - 0.1	
Design	Closed
Purlin (Bridge Count)	C100-10(1)
Purlin Centres	0.976m

BRACING DESIGN NOTES

All bracing must be connected to main structural members i.e. Portal Legs, Portal Rafters, End Wall, Uprights & Main Access Door Jambs. Bracing shall not be solely connected to intermediate members such as Girts, Purlins, Minor Access Door Jambs & PA Door Jambs.

BRACING LEGENDS

S1:1

Mitek Strip-Brace 27x0.6mm G550, configured as a single cross.

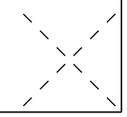

VIEWS

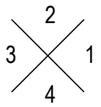

TOTALSPAN® STEEL BUILDINGS

Project Ref: JH.309

© Copyright 2017 Spanbild NZ Ltd. All rights reserved.

Don Campbell
7 Swindon Lane
Amberley
7410
021 1521186

Gable Range - Design

Engineering Tables

VIEW 2 - BUILDING SIDE (BAYS 1-2)

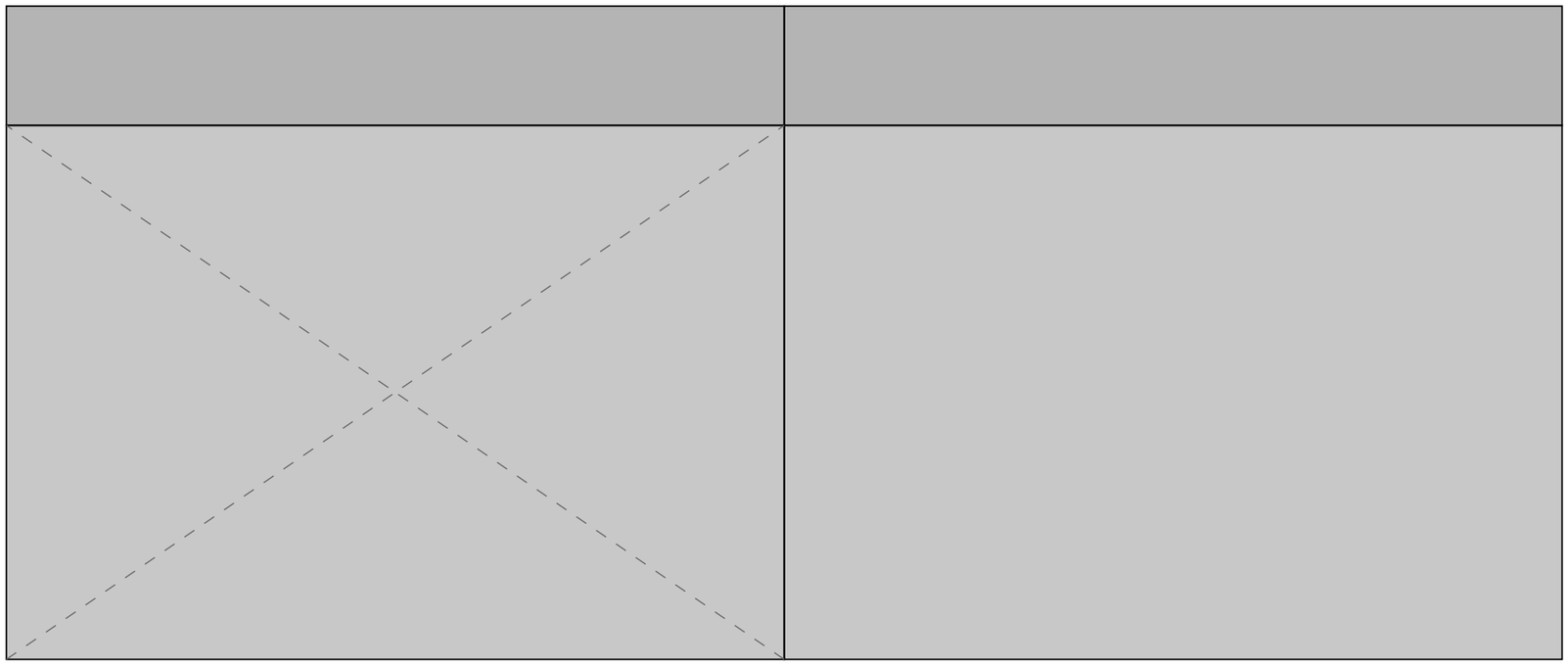

FRAMING SECTION TABLES	
Base Building - 2.1	
Design	Closed
Girt (Bridge Count)	C80-95(1)
Girt Centres	1.140m

	Bay 1	Bay 2
	2.1	2.1
	S1:1 - 5.77kN	

BRACING kN (Totals)	
Required	1.77 kN
Achieved	5.77 kN

VIEWS
2
3 1
4

TOTALSPAN® STEEL BUILDINGS

Project Ref: JH.309

© Copyright 2017 Spanbild NZ Ltd. All rights reserved.

Don Campbell
7 Swindon Lane
Amberley
7410
021 1521186

Gable Range - Design

Engineering Tables

VIEW 4 - BUILDING SIDE (BAYS 2-1)

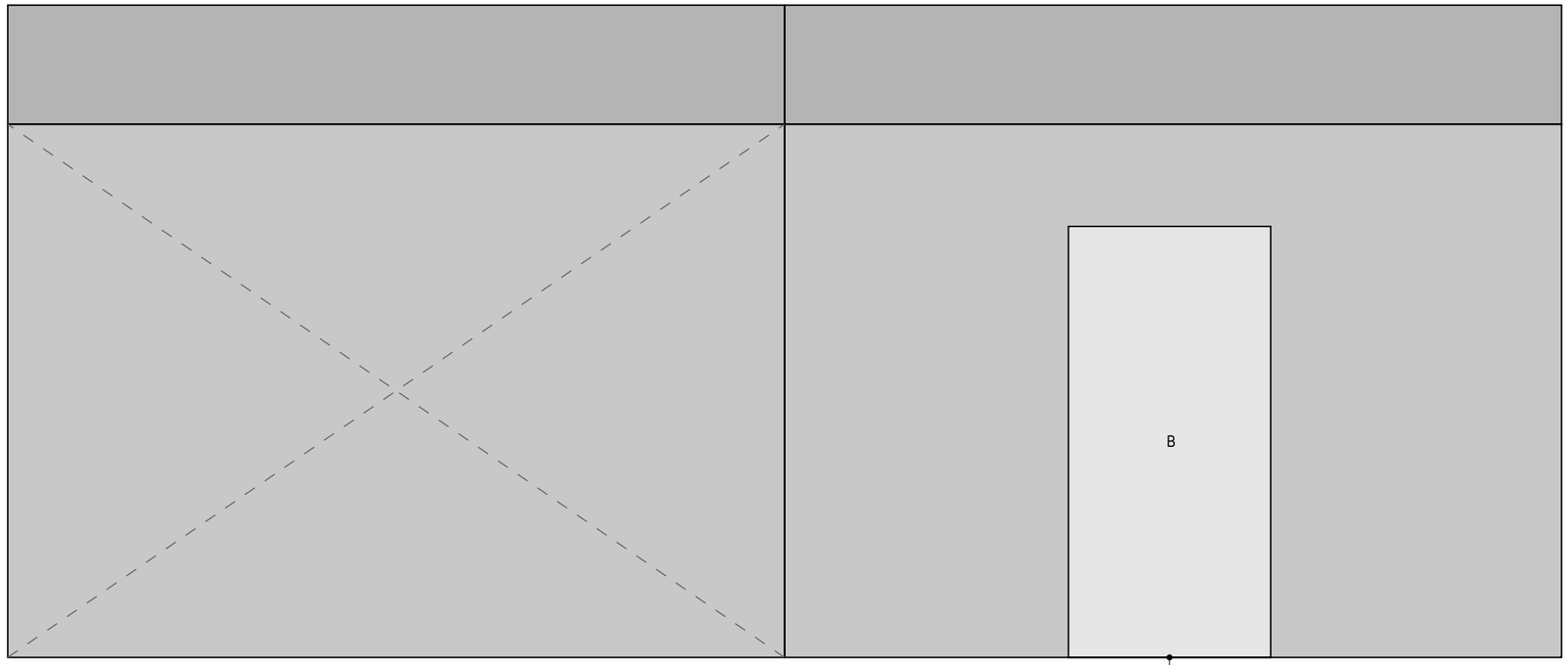

OPENING SECTION TABLES	
Opening - B	
Jambs & Head Beam	C80-95

FRAMING SECTION TABLES	
Base Building - 4.1	
Design	Closed
Girt (Bridge Count)	C80-95(1)
Girt Centres	1.140m

F3 F2 F1

	Bay 2	Bay 1
	4.1	4.1
	S1:1 - 5.77kN	

BRACING kN (Totals)	
Required	1.77 kN
Achieved	5.77 kN

VIEWS
2
3 1
4

TOTALSPAN® STEEL BUILDINGS

Project Ref: JH.309

© Copyright 2017 Spanbild NZ Ltd. All rights reserved.

Don Campbell
7 Swindon Lane
Amberley
7410
021 1521186

Gable Range - Design

Engineering Tables

FRAME F1

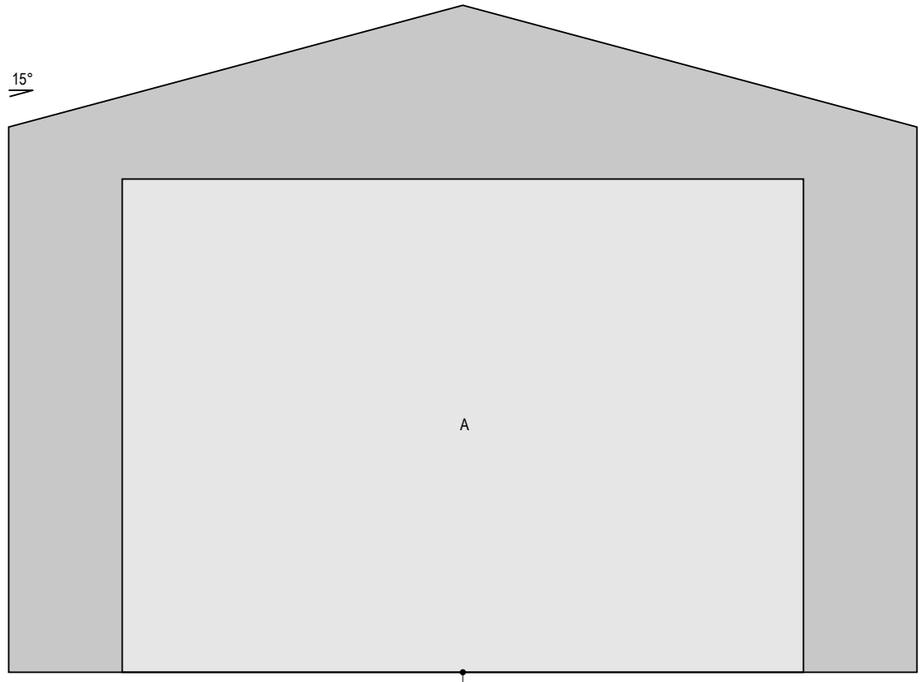

FRAMING SECTION TABLES	
Base Building - B.1	
Design	Closed
Leg & Rafter	C150-10
Girt	C80-75
Girt Centres	1.140m

OPENING SECTION TABLES	
Opening - A	
Jambs	C150-15
Head Beam	C150-10

VIEWS
2
3 1
4

TOTALSPAN® STEEL BUILDINGS

Project Ref: JH.309

© Copyright 2017 Spanbild NZ Ltd. All rights reserved.

Don Campbell
7 Swindon Lane
Amberley
7410
021 1521186

Gable Range - Design

Engineering Tables

FRAME F2

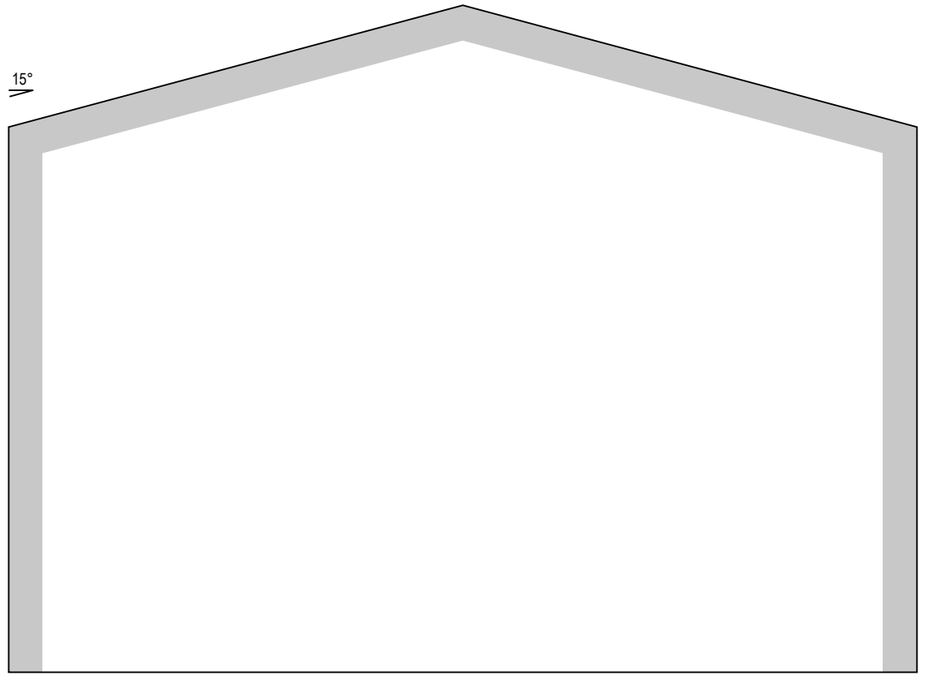

FRAMING SECTION TABLES	
Base Building - B.2	
Design	Closed
Leg & Rafter	C150-10

Base Building
B.2

VIEWS
2
3 1
4

TOTALSPAN STEEL BUILDINGS

Project Ref: JH.309

© Copyright 2017 Spanbild NZ Ltd. All rights reserved.

Don Campbell
7 Swindon Lane
Amberley
7410
021 1521186

Gable Range - Design

Engineering Tables

FRAME F3

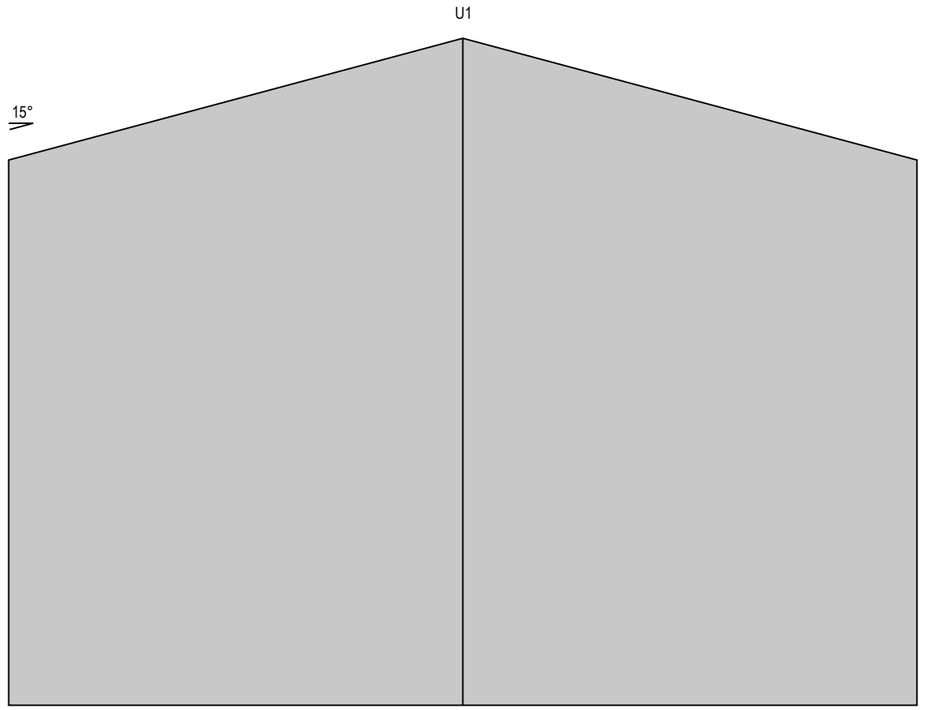

FRAMING SECTION TABLES	
Base Building - B.3	
Design	Closed
Leg & Rafter	C150-10
Upright - U1	C80-95
Girt	C80-75
Girt Centres	1.140m

VIEWS
2
3 1
4

TOTALSPAN® STEEL BUILDINGS

Project Ref: JH.309

© Copyright 2017 Spanbild NZ Ltd. All rights reserved.

Don Campbell
7 Swindon Lane
Amberley
7410
021 1521186

Gable Range - Design

Engineering Tables

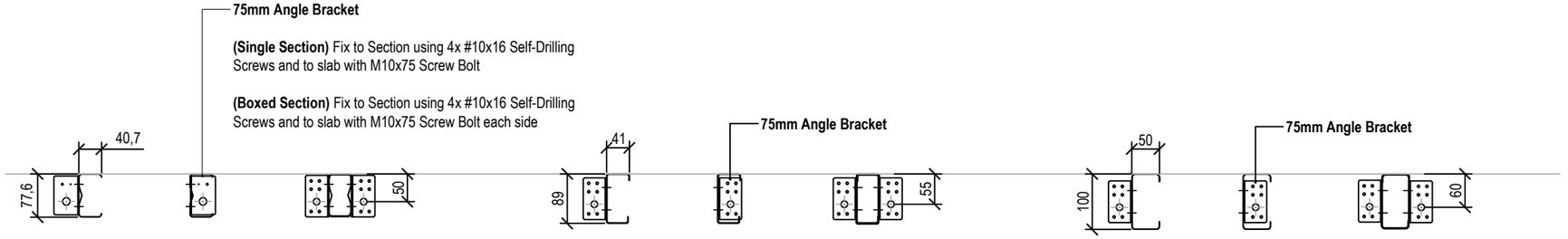

- **C80 Foundation Connections**
  SCALE 1:10

- **C90 Foundation Connections**
  SCALE 1:10

- **C100 Foundation Connections**
  SCALE 1:10

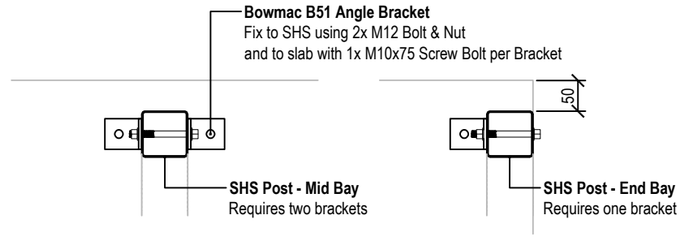

- **SHS Foundation Connections**
  SCALE 1:10

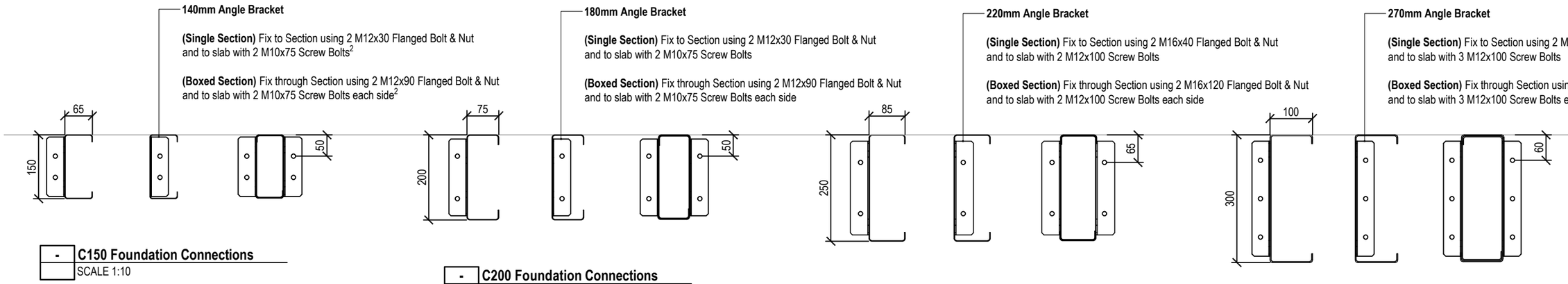

- **C150 Foundation Connections**
  SCALE 1:10

- **C200 Foundation Connections**
  SCALE 1:10

- **C250 Foundation Connections**
  SCALE 1:10

- **C300 Foundation Connections**
  SCALE 1:10

Important Notes

1. Recommended edge distances are listed above, brackets may be repositioned slightly +/- 3mm however concrete edge distance to bolt centre shall not be less than be 50mm
2. **C/B150-15 & C/B150-19 Portal Legs** shall have a M10x38mm Sqaure Washer to M10x75 Screw Bolts (otherwise, not required.)

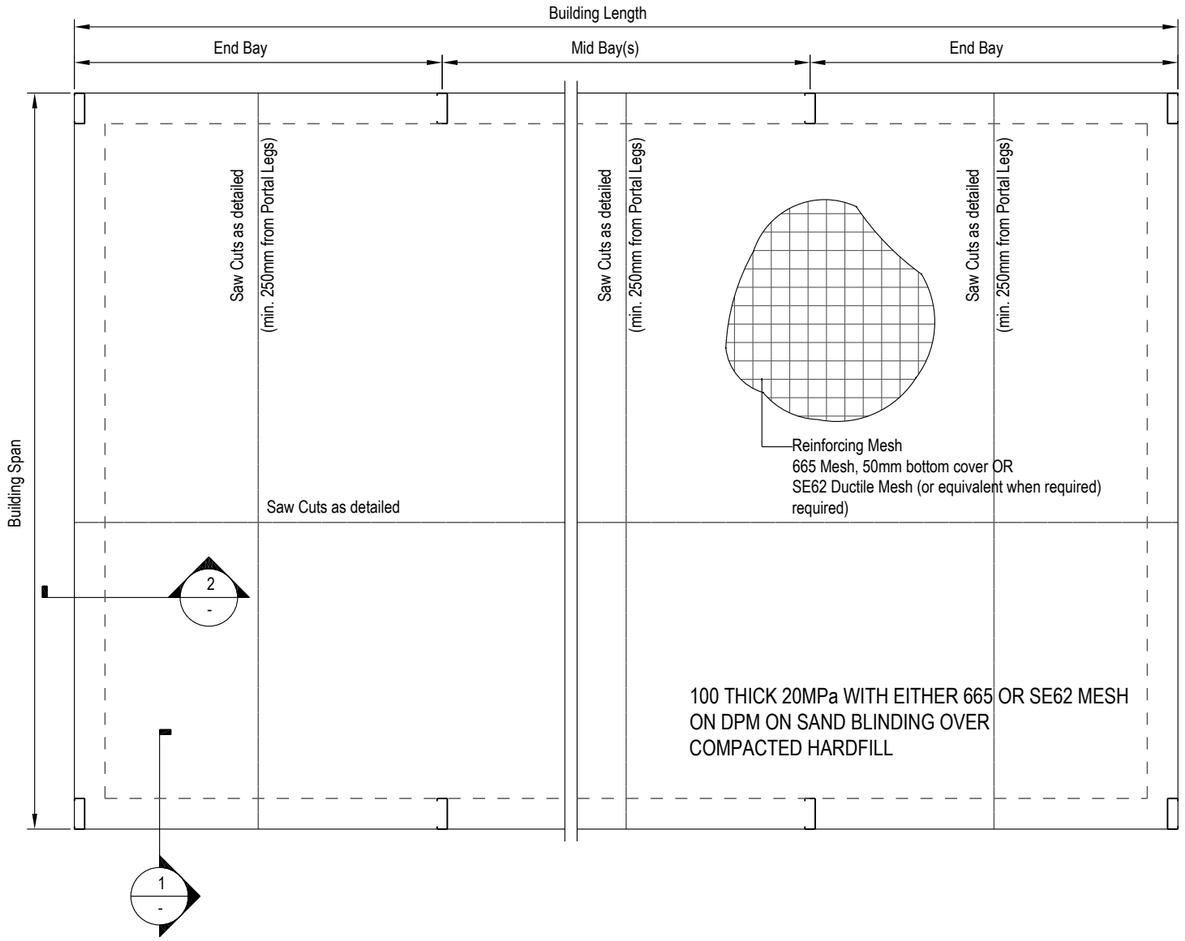

- **INDICATIVE SLAB PLAN (FOR NOTATION REFERENCE ONLY)**
SCALE 1:50

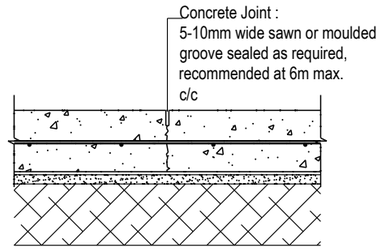

- **TIED JOINT / SAW CUTS**
SCALE 1:10

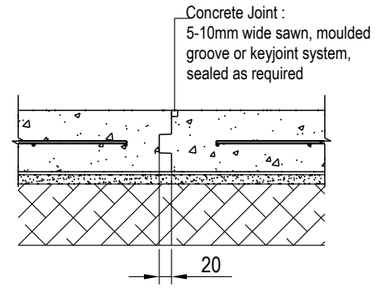

- **FREE KEYED JOINT**
SCALE 1:10

Important Notes

1. **Perimeter reinforcing**
   1.1. **Central reinforcing specified "along" building length;** shall continue "across" building span
   1.2. **Top and Bottom reinforcing specified "along" building length;** the lesser reinforcing specified (where applicable) shall be used for single central reinforcing "across" building span. Reinforcing "across" shall wrap around the corners 600mm to remain "continuous".
2. Slab thickness may be increased only in case of large machinery, equipment where heavier traffic loadings are required. Check control joint requirements as per CCANZ guidelines and install where recommended.
3. This slab has been designed in accordance with NZS3101:2006 and compliant to where lesser ductile mesh may be used per clause 5.3.2.7 (a) where "The yielding of reinforcement will not occur at the ultimate limit state".
4. Typical GL to FFL is 100mm for a "non-habitable" foundation.
5. Saw cuts to be minimum 250mm away from Portal Legs.
6. In areas where soil bearing is less than 225kPa UBC, excavate trench (max 600mm depth) to ground with 225kPa UBC and backfill with compacted hardfill.

Maximum Spacing of Free Joints (m) - as per CCANZ guidelines			
Steel	100mm Slab	120/125mm Slab	150mm Slab
665	26	21	17
663	37	30	25
661			35

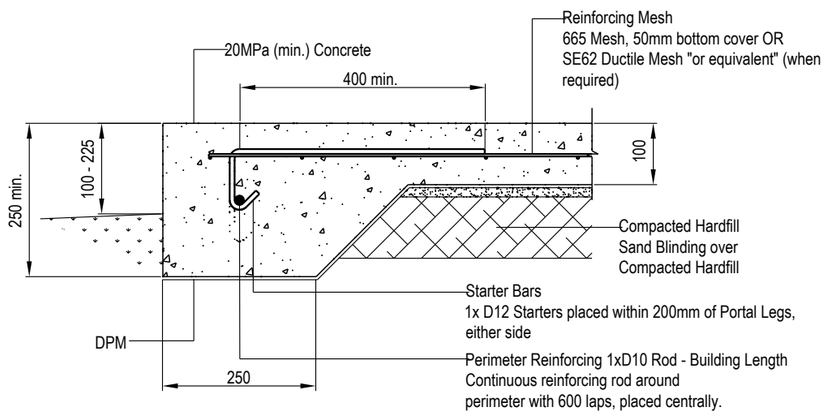

1 - **100MM FOUNDATION (CENTRAL REINFORCING)**
SCALE 1:10

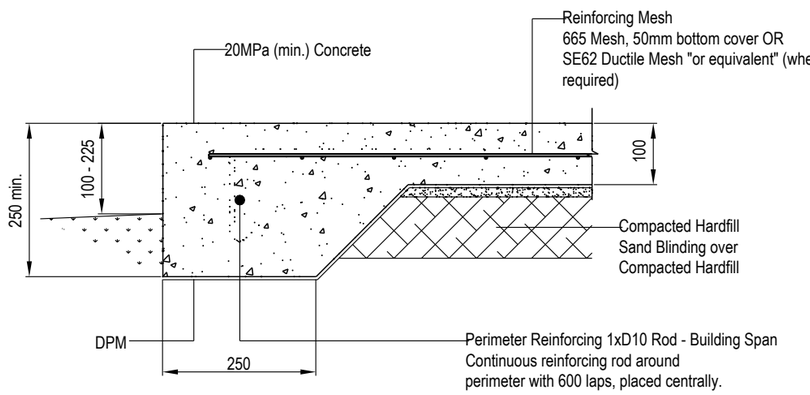

2 - **100MM FOUNDATION (CENTRAL REINFORCING)**
SCALE 1:10

TOTALSPAN®
STEEL BUILDINGS

Project Ref: JH.309

© Copyright 2017 Spanbild NZ Ltd. All rights reserved.

Don Campbell
7 Swindon Lane
Amberley
7410
021 1521186

Gable Range - Design

Foundation Details SD-F02

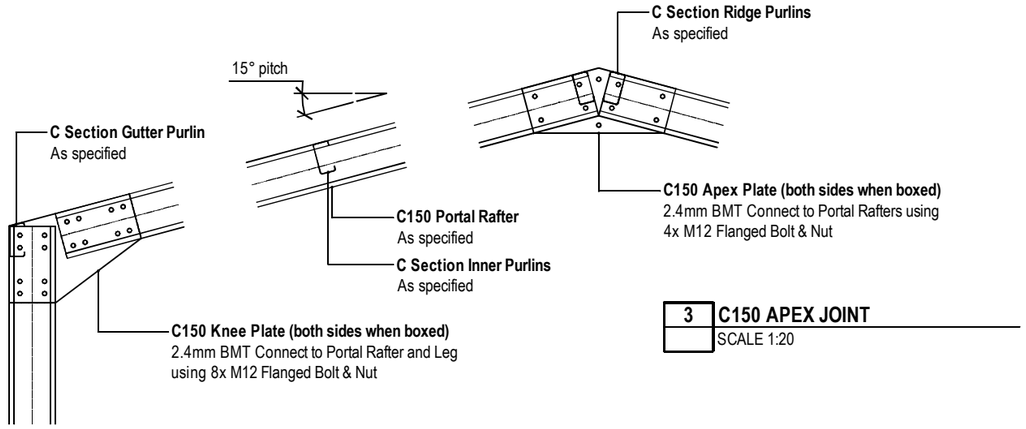

3 C150 APEX JOINT
SCALE 1:20

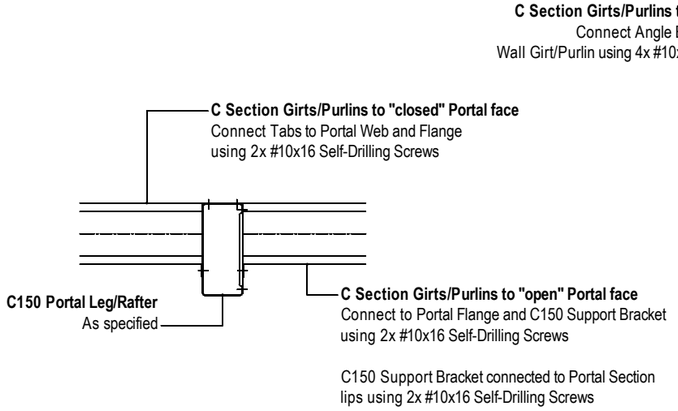

6 GIRT/PURLIN TABBED CONNECTION
SCALE 1:10

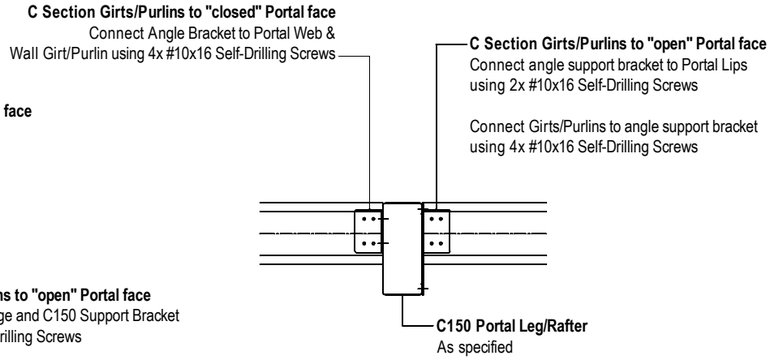

7 GIRT/PURLIN BRACKET CONNECTION
SCALE 1:10

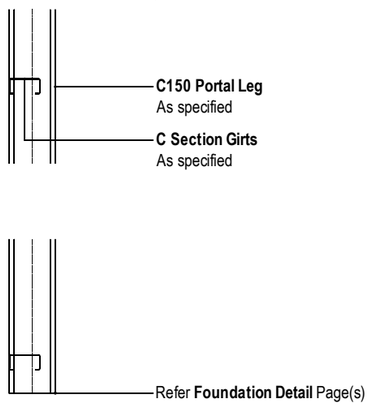

2 C150 KNEE JOINT
SCALE 1:20

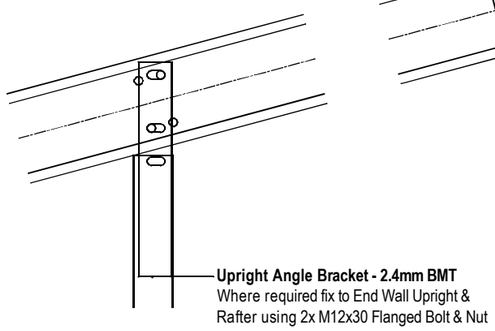

5 UPRIGHT TO RAFTER CONNECTION
SCALE 1:10

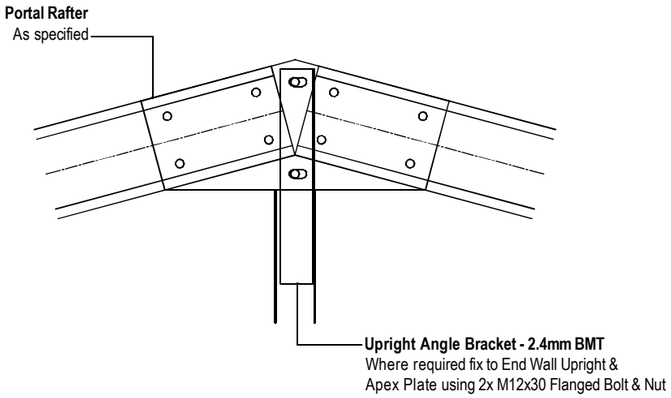

4 UPRIGHT TO APEX CONNECTION
SCALE 1:10

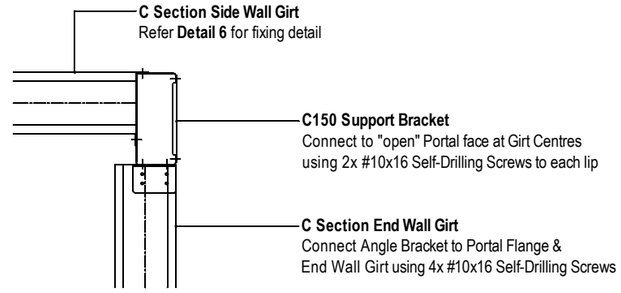

8 END WALL GIRT CONNECTION
SCALE 1:10

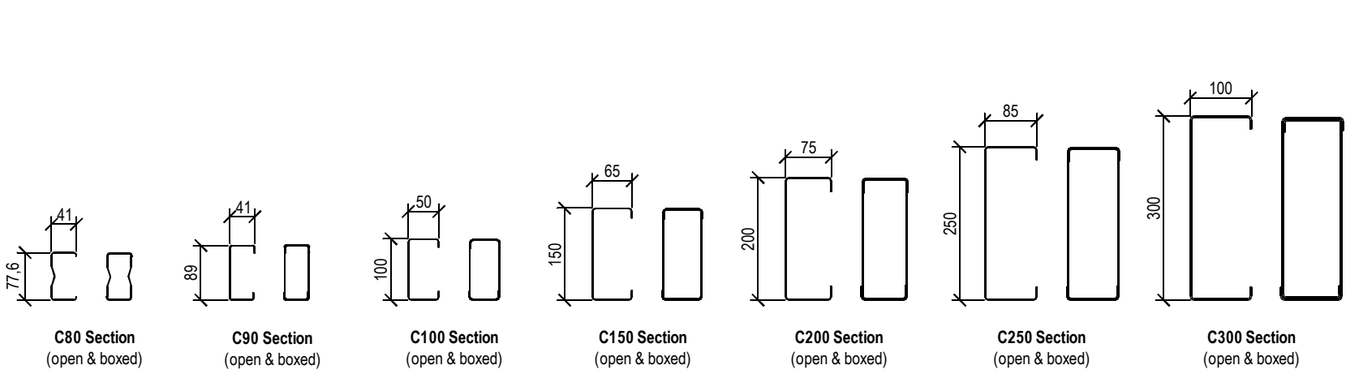

- C SECTION PROFILES (INCL. BOXING)
SCALE 1:20

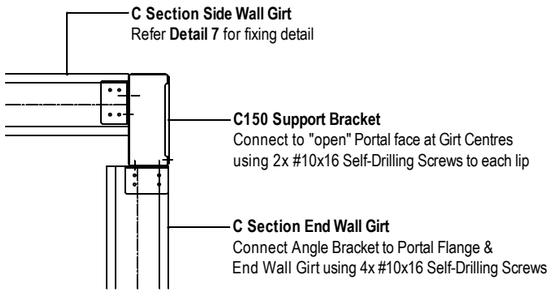

9 END WALL GIRT CONNECTION
SCALE 1:10

TOTALSPAN®
STEEL BUILDINGS

Project Ref: JH.309

© Copyright 2017 Spanbild NZ Ltd. All rights reserved.

Don Campbell
7 Swindon Lane
Amberley
7410
021 1521186

Gable Range - Design

Frame Details SD-P01

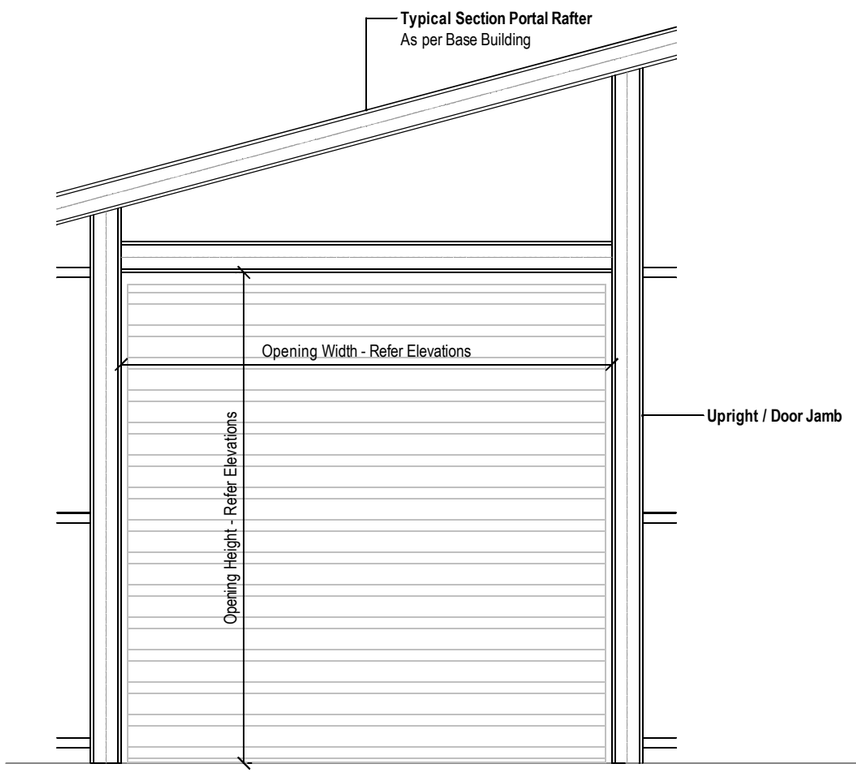

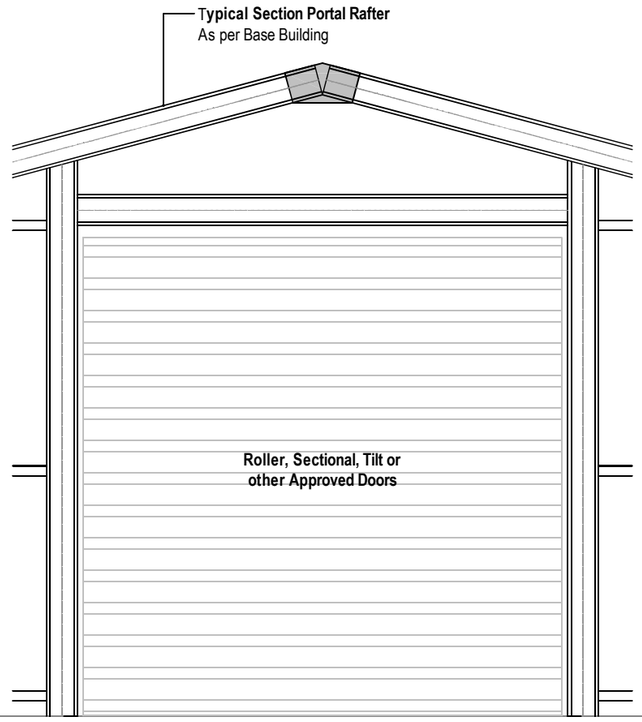

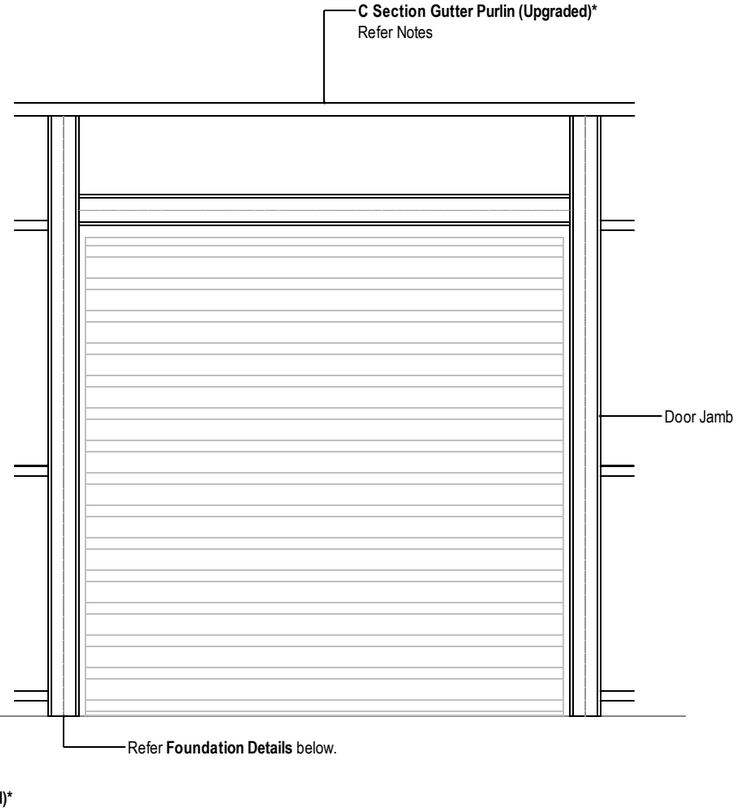

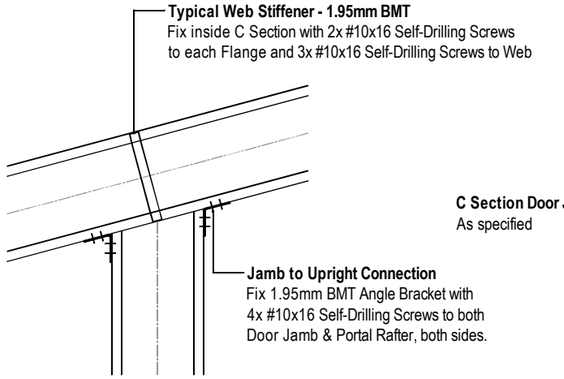

- **DOOR JAMB/UPRIGHT TO RAFTER CONNECTION**
  SCALE 1:10

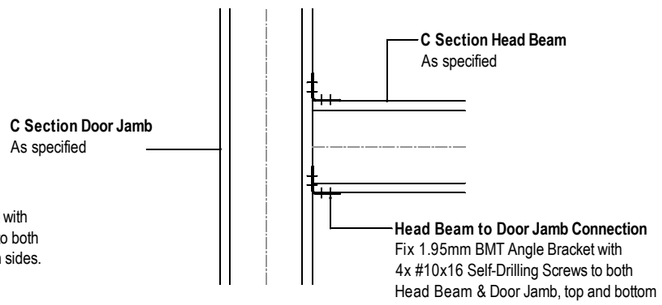

- **HEAD BEAM TO DOOR JAMB CONNECTION**
  SCALE 1:10

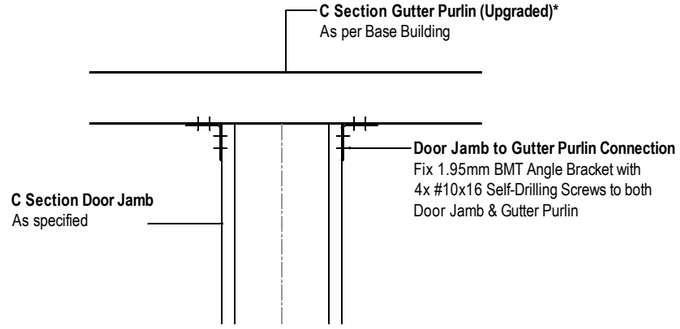

- **HEAD BEAM TO GUTTER PURLIN CONNECTION**
  SCALE 1:10

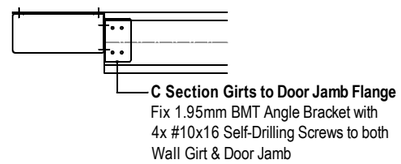

- **GIRT TO DOOR JAMB CONNECTION**
  SCALE 1:10

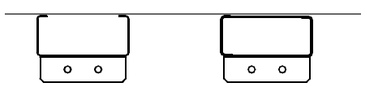

C150 Section Door Jambs
(open or boxed options)

- **C150 Jamb to Foundation Connections**
  SCALE 1:10

TOTALSPAN®
STEEL BUILDINGS

Project Ref: JH.309

© Copyright 2017 Spanbild NZ Ltd. All rights reserved.

Don Campbell
7 Swindon Lane
Amberley
7410
021 1521186

Gable Range - Design

Major Openings SD-M01

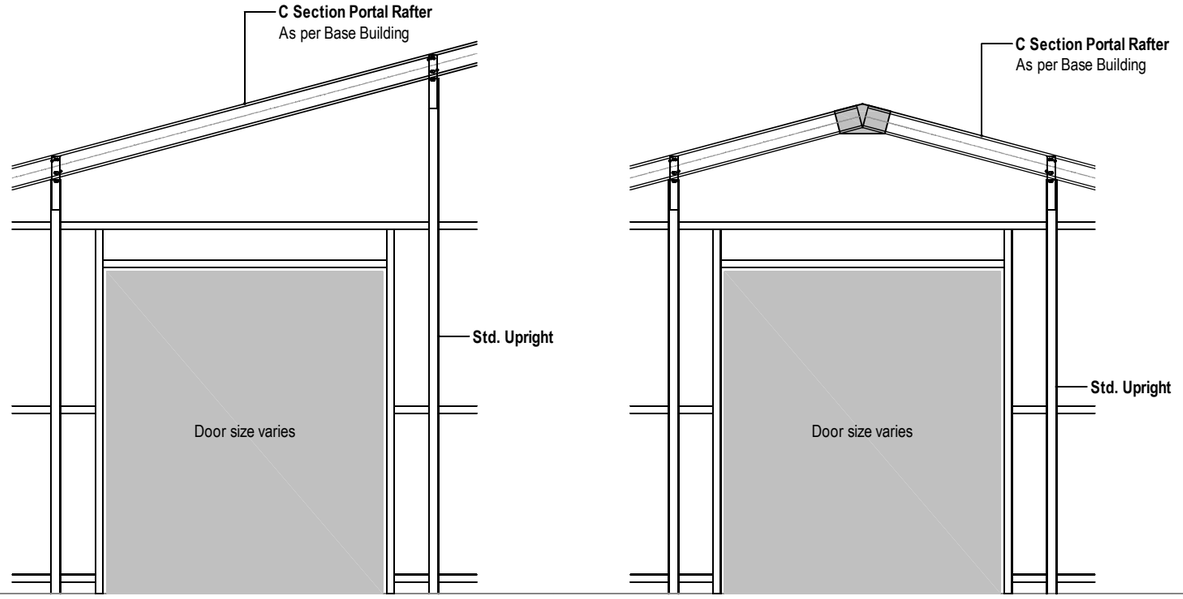

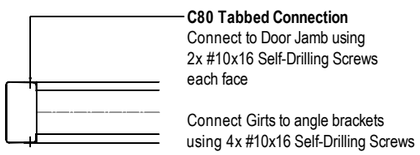

- C SECTION TABBED CONNECTION
SCALE 1:10

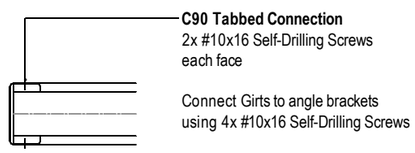

- C SECTION NOTCHED CONNECTION
SCALE 1:10

TOTALSPAN®
STEEL BUILDINGS

Project Ref: JH.309

© Copyright 2017 Spanbild NZ Ltd. All rights reserved.

Don Campbell
7 Swindon Lane
Amberley
7410
021 1521186

Gable Range - Design

Minor Door Openings SD-M05

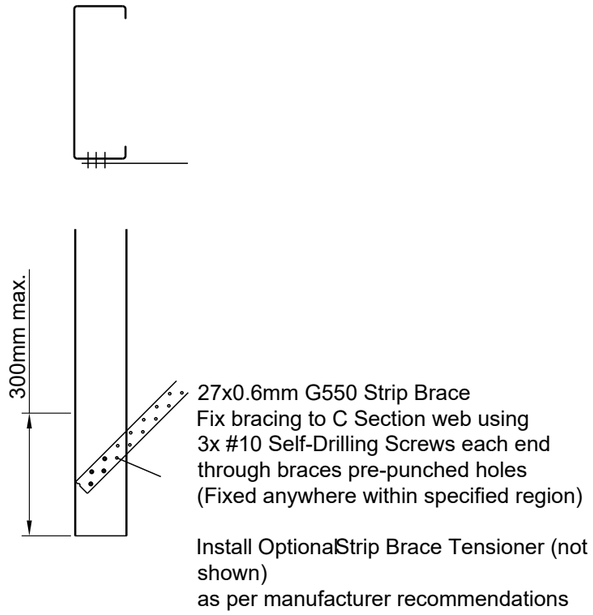

- SINGLE STRIP BRACE FIXING
SCALE 1:10

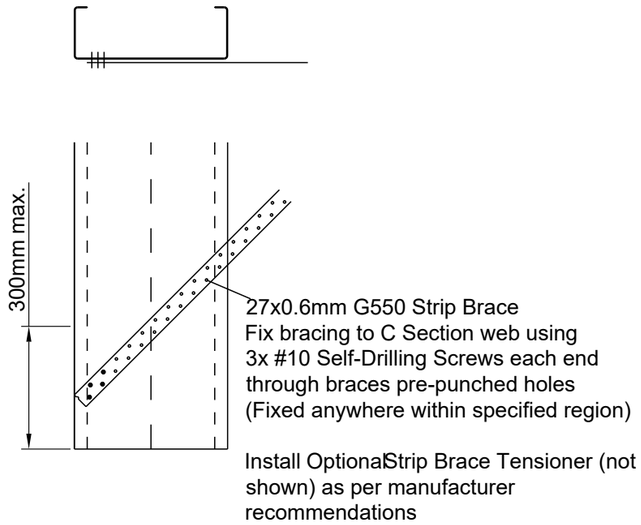

- SINGLE STRIP BRACE FIXING
SCALE 1:10

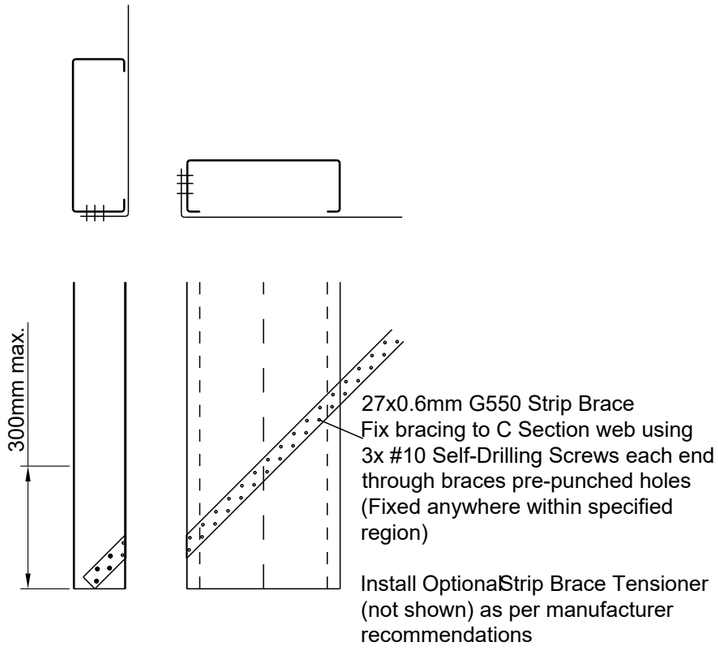

- SINGLE STRIP BRACE FIXING
SCALE 1:10

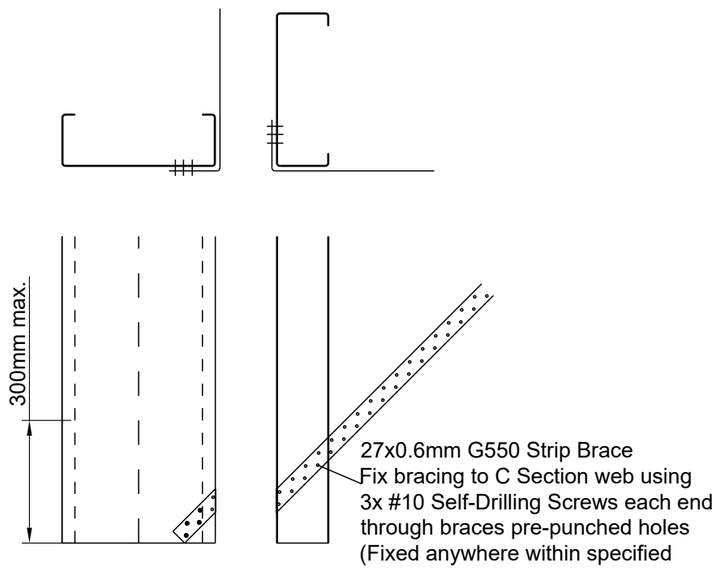

- SINGLE STRIP BRACE FIXING
SCALE 1:10

TOTALSPAN®
STEEL BUILDINGS

Project Ref: JH.309

© Copyright 2017 Spanbild NZ Ltd. All rights reserved.

Don Campbell
7 Swindon Lane
Amberley
7410
021 1521186

Gable Range - Design

Bracing Details

Sheet 17 of 19

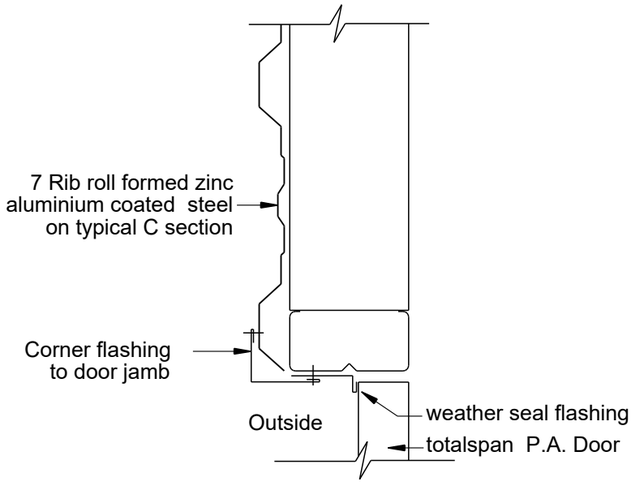

- **P.A. Door Jamb Detail**
SCALE: NTS

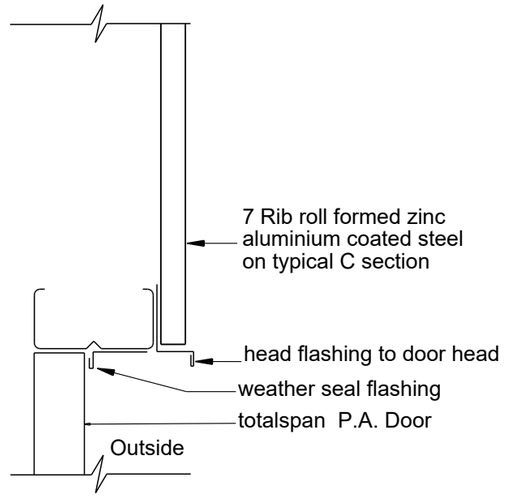

- **P.A. Door Head Detail**
SCALE: NTS

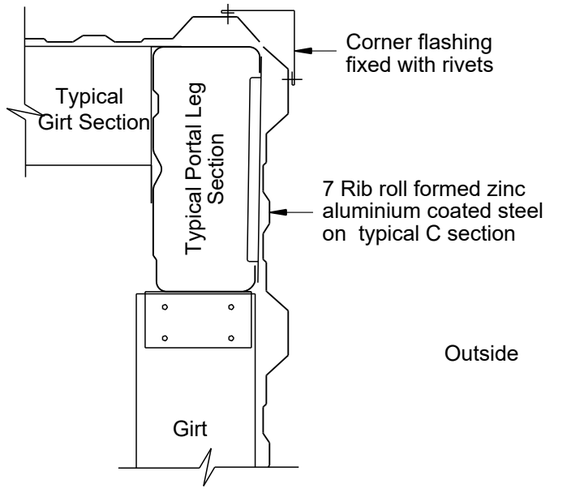

- **External Corner**
SCALE: NTS

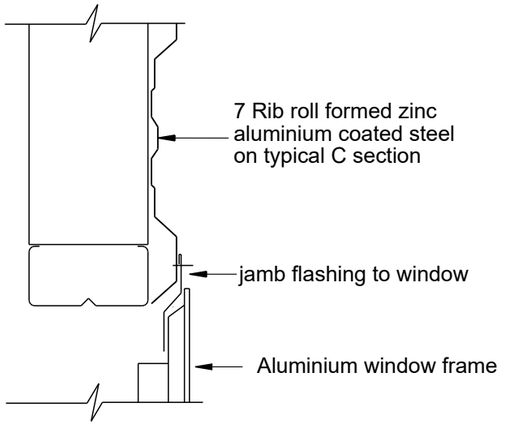

- **Window Jamb Detail**
SCALE: NTS

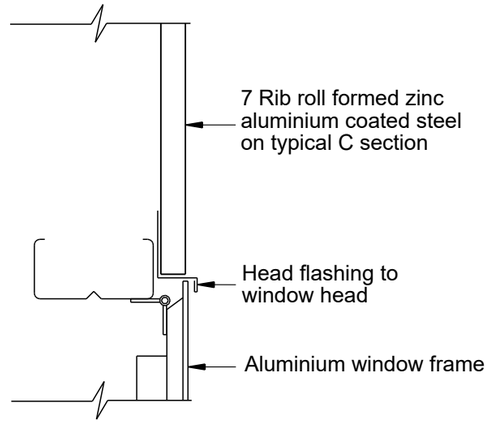

- **Window Head Detail**
SCALE: NTS

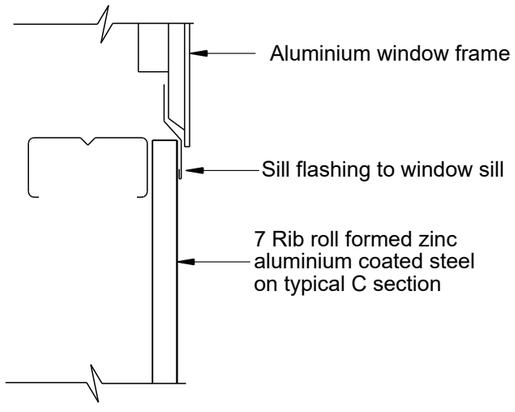

- **Window Sill Detail**
SCALE: NTS

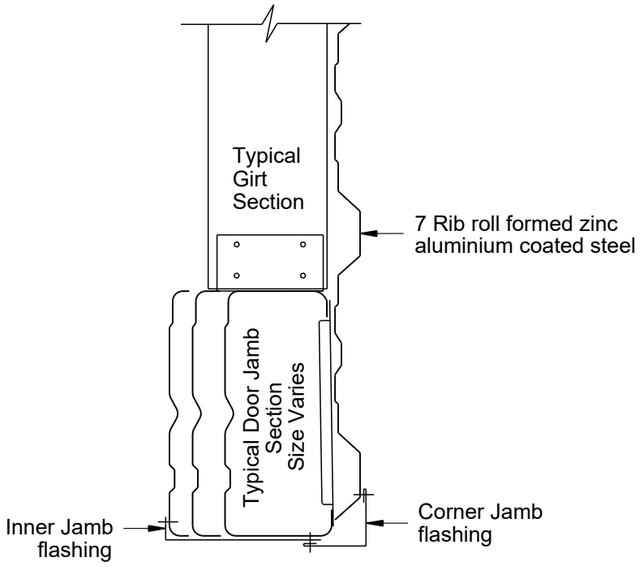

- **Main Access Door Jamb Detail**
SCALE: NTS

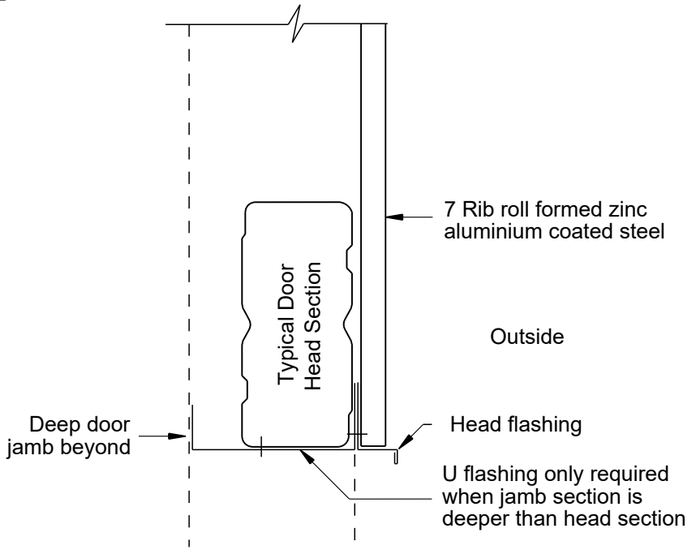

- **Main Access Door Head Detail**
SCALE: NTS

TOTALSPAN®
STEEL BUILDINGS

Project Ref: JH.309

© Copyright 2017 Spanbild NZ Ltd. All rights reserved.

Don Campbell
7 Swindon Lane
Amberley
7410
021 1521186

Gable Range

Flashing Details

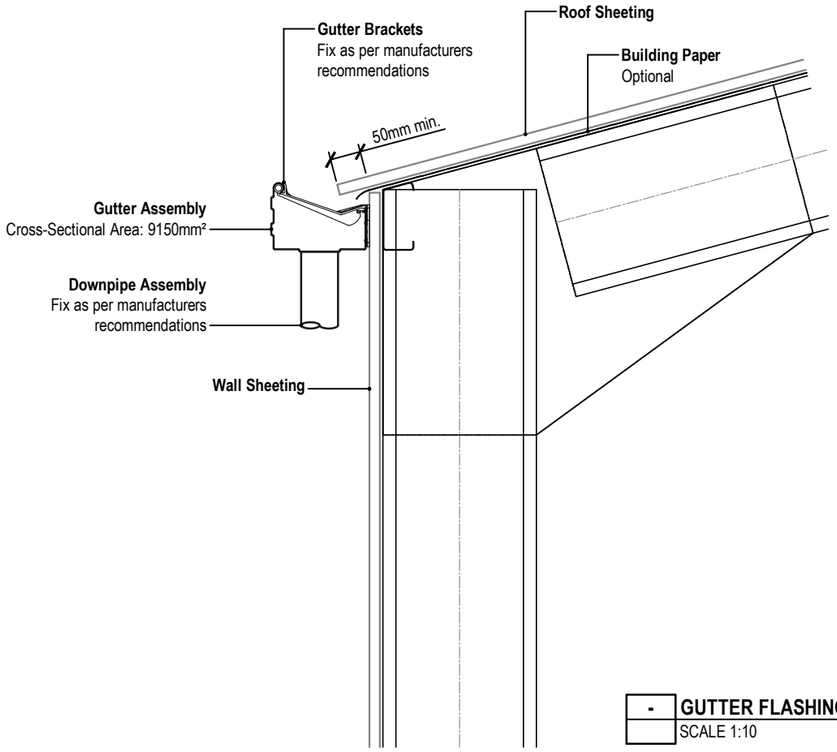

- **GUTTER FLASHING DETAIL**
SCALE 1:10

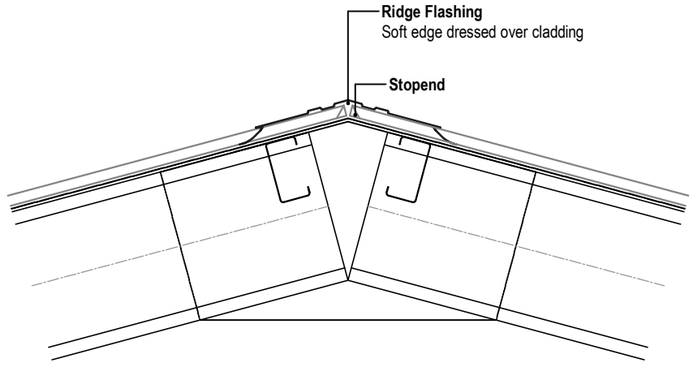

- **RIDGE FLASHING DETAIL**
SCALE 1:10

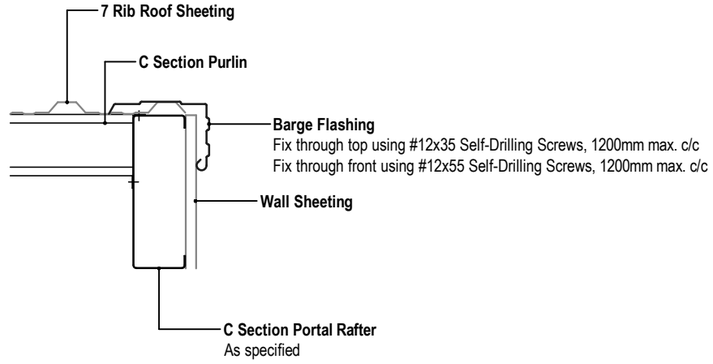

- **BARGE FLASHING DETAIL**
SCALE 1:10

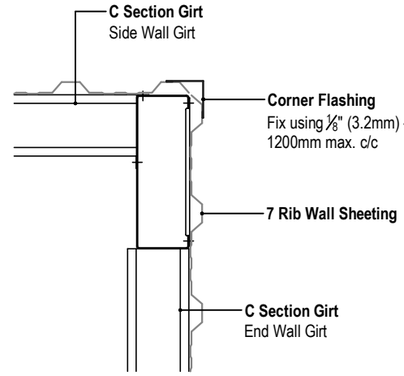

- **CORNER FLASHING DETAIL**
SCALE 1:10

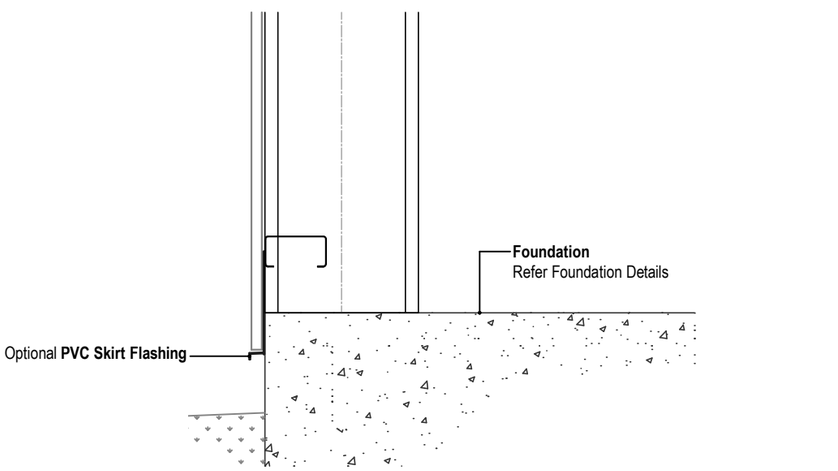

- **SKIRT FLASHING DETAIL**
SCALE 1:10

Important Design Notes

1. Roof and Wall Sheeting shall be 0.35 - 0.55 B.M.T, AZ150 Coating, G550 Steel only. Alternative claddings (excluding light-weight translucent panel i.e. Ampelite), require an independent specific design certificate for the scope of work.
2. Wall Cladding to have minimum 50mm cover and 40mm min. clearance to ground level
3. Fixing pattern as per E2/AS1 or NZ MRM - NZ Metal Roof and Wall Cladding Code of Practice.
4. Flashings shall be fixed as per manufacturers recommendations.
5. Additional options may include:
   - 5.1. Snow straps for gutters
   - 5.2. Gutter purlin flashing
   - 5.3. Building paper in walls

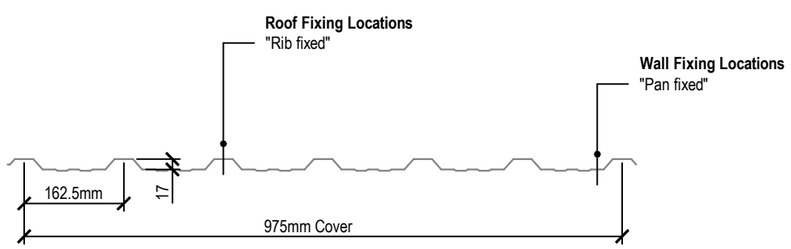

- **7 RIB CLADDING PROFILE**
SCALE 1:10

TOTALSPAN®
STEEL BUILDINGS

Project Ref: JH.309

© Copyright 2017 Spanbild NZ Ltd. All rights reserved.

Don Campbell
7 Swindon Lane
Amberley
7410
021 1521186

Gable Range

Flashing Detail SD-E01

HURUNUI DISTRICT COUNCIL
P.O. Box 13 | Amberley 7441 | 66 Carters Road | Amberley 7410
Phone: 03 314-8816 | Email: info@hurunui.govt.nz
Web: hurunui.govt.nz | facebook.com/HurunuiDistrictCouncil

To comply with the Global Stormwater Discharge Consent conditions for Hurunui District Council (HDC), an Erosion and Sediment Control Plan (ESC) is required before construction commences.

1. The Erosion and Sediment Control Plan shall meet the requirements of the 'Erosion and Sediment Control Guideline, Environment Canterbury' https://esccanterbury.co.nz/ for construction,
   and 'Water Sensitive Design for Stormwater' (GD004)
   https://content.aucklanddesignmanual.co.nz/regulations/technical-guidance/Documents/GD04%20WSD%20Guide.pdf
   for design and operation.

2. Prior to commencing works authorised by this consent, the consent holder shall submit a Sediment & Erosion Control Plan to the 3 Waters Planning Team. The plan shall include, as a minimum:-

   i. the mechanisms used to ensure that waterborne sediment does not leave the site, during and/or after construction;

   ii. the mechanisms used to control dust;

   iii. the procedures for keeping stormwater systems, adjacent footpaths and roads free of mud, debris and obstructions.

   iv. how parking associated with construction will be managed.

   v. the nature and location of signage to be erected to warn pedestrians of the construction site and associated construction vehicles.

3. Sediment-laden water must not be allowed to leave the site.

4. The best possible means shall be employed to minimise windblown dust, soil and the associated wind erosion.

5. Adequate drainage and silt control must be in place during and following the earthworks, so as to avoid or mitigate any adverse environmental effects.

6. The consent holder shall implement suitable measures to prevent earth being deposited on public roads. In the event that the materials are deposited on the road, the consent holder shall take immediate action at their own expense to remediate the contamination resulting from the construction works. The measures shall remain in place until completion of work.

7. Any damage/sediment build up to the stormwater components (kerb and channel, sumps, Stormwater manholes, soakpits, retention/detention basins etc.), as a result of unapproved construction phase discharge, shall be cleaned/repaired at the consent holder's expense.

8. The Site Manager will ensure that the works are executed in accordance with the approved plans and will continue to supervise and monitor the ESCP works. This will be verified by the HDC Building Officers.

9. All earthworks shall be undertaken in accordance with the provisions of N.Z.S 4431 (only applicable for Resource Consents/Land use consents or BCs where large volume of earthworks is involved).

10. Immediately upon completion of earthworks, all earth worked areas shall be regrassed or planted to ensure the surface is stabilised.

Reducing BUILDING WASTE

through the building waste hierarchy

1

Reduce, Rethink, Redesign

- Avoid over-ordering and have a plan for the use of leftover materials.
- Protect materials to prevent losses due to damage.
- Design potential waste streams at the inception and design phase.

2

Reuse, Repair, Repurpose

- Reuse products in their existing form, for example, framework.
- Retain leftover materials like plasterboard for the next job.
- Reuse timber for garden beads or boxing.

3

Recycling, Compost, Anaerobic Digestion

- Reprocess waste materials to create new product, such as take-back schemes for scrap products such as plastic pipes, paint and polystyrene.



4

Recovery Value

- Extract materials or energy from waste for further use or processing, for example, using waste collectors who can provide recovery services.

5

Disposal

- Waste sent to landfill.
- Waste that cannot be used in another way.



HURUNUI District Council

See Council's website at www.hurunui.govt.nz/property-rates/rubbish-recycling/additional-information for an A-Z on reducing building waste.





Small construction sites

THE ABSOLUTELY ESSENTIAL HEALTH AND SAFETY TOOLKIT

WORKSAFE

ABOUT THIS TOOLKIT

This toolkit[1] provides useful checklists for common health and safety issues on small construction sites. It will help you manage or avoid these issues to ensure the health and safety of everyone on and around your worksite, including workers, clients and members of the public. Links to more detailed advice are included where relevant.

Doing nothing is not an option

Construction is among the top four sectors for highest worker injury rates. Worker fatalities are more than double the average for all other sectors. The most common injuries are ones to the lower back and spine. The most common cause of serious harm injuries are slips, trips and falls from height. Males aged 20-24 are most likely to be injured.

The costs of workplace injuries to New Zealand business are substantial – ACC pay more than $100 million dollars per year in the construction sector. The direct and indirect costs of all workplace injuries in New Zealand are over $1.3 billion.

Make use of this toolkit. If we all work together we can make the construction industry a healthier and safer place to work in.

Health and safety legislation

The Health and Safety at Work Act 2015 (HSWA) is New Zealand's key work health and safety law. It introduces new responsibilities for managing the work related risks that can cause serious injury, illness or even death.If you have good health and safety practices in place now, you are likely to be well on your way. However the new Act introduces some new features and it's important for you to review your approach to work health and safety.

How to contact WorkSafe

For further advice on health and safety at work, contact the WorkSafe Response Team on (freephone) **0800 030 040**.

[1] The content in this toolkit has been adapted from the Health and Safety Executive publication *The absolutely essential health and safety toolkit for the smaller construction contractor* published in 2008 and available at www.hse.gov.uk
It does not cover legal requirements and is a guide only; for information on how to comply with the law, see the relevant legislation at www.legislation.govt.nz

CONTENTS

1.0 **General managment** 2

1.1 Managing a small construction site 3

1.2 When to notify WorkSafe 4

1.3 Contracting and subcontracting 4

2.0 **Health and safety checklist** 5

2.1 Site and services 6

2.2 Working at height 8

2.3 Moving material 10

2.4 Working with vehicles and machinery 11

2.5 Critical health risks 12

2.6 Worker wellbeing 14

2.7 Emergency situations 15

1.0 General management

IN THIS SECTION:

1.1 Managing a small construction site

1.2 When to notify WorkSafe

1.3 Contracting and subcontracting

1.1 Managing a small construction site

The checklists below cover some things to consider when managing a small construction site under the Health and Safety at Work Act 2015 (HSWA) which will imposes duties on the 'PCBU'.

What is a PCBU?

The HSWA defines 'PCBU'. It is essentially a person conducting a business or undertaking, whether alone or with others and whether for profit or gain or not. The PCBU is in the best position to control risks to work health and safety. This is why the PCBU has the primary duty to ensure health and safety.

Despite its name, a PCBU can be a business entity, such as a company, as well as an individual person. An individual person will generally be a PCBU if they are a sole trader or a self-employed person.

Examples of a PCBU include:

- a manufacturing business
- an import business
- an owner-driver of their own courier business
- a self-employed person operating their own business
- a partnership
- a building company, whether a principal contractors or a sub-contractors
- a not-for-profit organisation that employs admin staff.

PCBUs have a number of duties under the Health and Safety at Work Act. PCBUs with overlapping duties must work together to achieve health and safety at work.

Keep this in mind when reading the checklists. Many of the things covered in this booklet will help PCBUs to meet their duties under the HSWA.

See the WorkSafe website for more information.

Do you make sure workers:

- are trained, competent and fit to do the job safely and without putting their own or others' health and safety at risk?
- are properly supervised and given clear instructions?
- have access to washing and toilet facilities?
- have the right tools, equipment, plant and personal protective equipment?
- are involved in discussions about health and safety issues?
- are given opportunities to participate in improving health and safety?



1.2 When to notify WorkSafe

In an emergency: *call the emergency services by dialling **111***.

A PCBU must notify WorkSafe as soon as possible if any of the following 'notifable events' occur:

- the death of a person
- a notifiable injury or illness
- notifiable incident.

Call the WorkSafe Response Team on freephone **0800 030 040** (24 hours) and choose option 1.

Fill in and submit a notification form within seven days at worksafe.govt.nz *Reporting: Serious Harm*.

Some types of work also require you to notify WorkSafe. These include where a worker could fall 5 m or more, some excavation work, working involving asbestos or working underground. For a full list of notifiable work and more information on notifable events, see the WorkSafe website.

For a hazardous substances emergency: call the New Zealand Fire Service on 111 and then the WorkSafe Response Team directly on 0800 030 040.

DON'T DISTURB THE SCENE

You must not interfere with an accident scene until authorised by a health and safety inspector. Exceptions include certain situations, such as when people or property are at risk. If you require scene clearance or other immediate assistance from a health and safety inspector, call WorkSafe on 0800 030 040.

1.3 Contracting and subcontracting

When contracting or subcontracting work do you:

- check the health and safety performance of the people you plan to use?
- give them the health and safety information they need for the work?
- talk about the work with them?
- hold regular discussions about how the work is going, including safety problems and concerns?
- make sure that you have provided everything you agreed (eg safe scaffolds, the right plant, access to toilets and other welfare facilities, etc)?
- check their performance and remedy any shortcomings?

For more information for PCBUs check for updates on the WorkSafe and New Zealand Legislation websites:

worksafe.govt.nz

www.legislation.govt.nz

2.0 Health and safety checklist

IN THIS SECTION:

2.1 Site and services

2.2 Working at height

2.3 Moving material

2.4 Working with vehicles and machinery

2.5 Critical health risks

2.6 Worker wellbeing

2.7 Emergency situations

The following pages provide you with an essential checklist of some of the hazards most commonly found on construction sites.

The questions will help you decide whether your site is a safe and healthy place to work. It is not a full list.

2.1 Site and services

Access on site

- Can everyone get to their place of work safely – and work there safely?
- Are access routes in good condition and clearly signposted?
- Do edges that people could fall from have suitable edge protection?
- Are holes protected with clearly marked and fixed covers to prevent falls?
- Is the site tidy, and are materials stored safely?
- Is lighting good enough?



Electricity and other services

- Have all necessary services been provided on site before work begins? Have you also identified existing services present on site (eg electric cables or gas mains) and taken effective steps, if necessary, to prevent harm from them?
- Is the supply isolated from earth with a voltage between phase and earth conductors not exceeding 230 volts?
- Are electrical extension cords connected to power tools using a Residual Current Device (RCD) or Isolating Transformer?

- Are cables and leads protected from damage?
- Are all connections to the system properly made and are suitable plugs used?
- Are tools and equipment checked by users, visually examined on site and regularly inspected and tested by a competent person?
- Have hidden electricity cables and other services been located (eg with a locator and plans) and marked, and have you taken precautions for safe working?
- Where there are overhead lines, has the electricity supply been turned off, or have other precautions been taken, such as providing 'goal posts' or taped markers?



Protecting the public

- Is the worksite fenced off from the public?
- Do roadworks have barriers around them and are the barriers lit?
- Are the public protected from falling material?
- Is clear signage present to warn people of danger (eg 'Keep out', 'Asbestos removal in progress')?

When work has stopped for the day:

- is the boundary secure?
- have steps been taken to prevent any unauthorised access (eg are all ladders removed or their rungs boarded so they can't be used)?
- are excavations and openings securely covered or fenced off?
- is all plant immobilised to prevent unauthorised use?
- are bricks and materials safely stacked?
- are flammable or dangerous substances locked away in secure storage places?



2.2 Working at height

- Have you ensured there is appropriate and fit-for-purpose means to prevent workers from falling from height?
- Have you planned the work properly and identified suitable precautions to make sure work can be carried out safely?
- Have you thought about whether you can avoid working at height by using different equipment or a different work method?
- Can you use equipment that will prevent a fall from happening, such as scaffolding or a mobile elevating work platform?
- Can you put in place measures to reduce the distance and consequences of a fall should one happen, such as nets, soft landing systems or personal fall prevention and protection equipment (eg a harness system)?
- Will the weather conditions threaten the health and safety of those carrying out the work?
- Have you thought about all the options and are you certain that you are gaining access to height using the safest means possible?

For more information, see worksafe.govt.nz

Scaffolds

- Are scaffolds erected, altered and dismantled by competent people?
- Are all uprights provided with base plates (and, where necessary, timber soleboards)?
- Are all uprights, ledgers, braces and out riggers in position?
- Is the scaffold secured to the building or structure in enough places to prevent collapse?
- Are there double guard rails and toe boards, or other suitable protection, at every edge to prevent falling?
- Are additional guards provided to prevent stacked materials such as bricks falling from scaffolds (eg kickboards, toeboards or screens)?
- Are the working platforms fully planked, and are the planks arranged to avoid tipping or tripping?
- Are there effective barriers or warning notices in place to stop people using an incomplete scaffold (eg where working platforms are not fully planked)?
- Is the scaffold strong enough to carry the weight of materials stored on it and are these evenly distributed?



- Are scaffolds being properly maintained?
- Does a competent person inspect the scaffold or proprietary mobile scaffold regularly (eg at least once a week; and always after it has been altered, damaged and following bad weather)?
- Are the results of inspections recorded?
- Are scaffolds erected using using safe work methods, and are they being used according to the supplier's and/or manufacturer's instructions?
- Have the wheels of mobile scaffolds been locked when in use and are the platforms empty when they are moved?
- Are gates (including guardrails being used as gates) and hatches across access points self-closing?
- Are working platforms placed as close as practicable to the working face to reduce the risk of people or materials falling through the gap?

For more information see worksafe.govt.nz

Ladders

- Choose the right tool for the job – can you buy or hire some alternative equipment that would provide a safer means of access?
- Are they in good condition?
- Do ladders rest against a solid surface and not on fragile or insecure materials?



- Are ladders secured at the top and bottom to prevent them slipping sideways and outwards?
- Do ladders rise at least a metre above the landing place? If not, are there other handholds available?
- Are the ladders positioned so that users don't have to overstretch?
- Do you have to use the top three rungs of a stepladder? If so your stepladder is too short.
- Is the user competent? Those using ladders should be trained to use the equipment safely.
- Can users maintain three points of contact at all times?
- Are materials being transported safely (ie not carried up a ladder)? Carrying materials up a ladder increases the risk of falling.

For more information see worksafe.govt.nz

Roofwork

- Is there edge protection to stop people or materials falling?
- Where nets are used, have they been installed properly?
- Have you identified brittle roof materials, such as cement sheets and roof lights?
- Have you taken precautions to stop people falling through fragile materials when working on the roof (eg by providing barriers, covers or working platforms)?
- Are people kept away from the area below the roof work?
- Are roofworkers trained and experienced to recognise the risks and are they competent to do the work?

For more information see worksafe.govt.nz

2.3 Moving material

Manual handling

- Are there heavy materials such as roof trusses, steel beams, kerbstones or bagged products that could cause injury if they have to be moved by hand?
- If so, can you:
  - choose lighter materials?
  - use trolleys, hoists, telehandlers and other plant or equipment so that manual lifting of heavy objects is kept to a minimum?
  - order materials such as cement and aggregates in units that are a manageable weight (eg 25 kg bags)?
  - avoid the repetitive laying of heavy building blocks or other masonry units (eg weighing more than 20 kg)?
- Have people been instructed and trained how to use lifting aids and other handling equipment safely?
- Have people been trained how to lift safely?

For more information see worksafe.govt.nz



Loading and unloading goods

- Have you checked that the load has not moved or destabilised during the journey to site?
- Is there an exclusion zone around the loading/unloading area to keep people who are not involved away from the work?
- Have you planned your method of unloading?

- Does your lifting equipment have a current annual certificate?
- Do you have to access the back of the truck at all, or can the preparation work be done from ground level? If not:
  - do you have a safe way of getting up and down from the back of the vehicle?
  - what do you have in place to prevent workers from falling off the back of the vehicle?
  - are your employees provided with sensible safety footwear with a good grip?

For more information see worksafe.govt.nz

Excavations

- Is the stability of the ground known to ensure against collapse? Or if the stability of the ground is not known, is there a support system in place for the excavation to prevent collapse, or has it been sloped or battered back to a safe angle? (Note: an excavation more than 1.5 m deep that is deeper than it is wide at the top must be notified to WorkSafe.)
- Is a safe method used for putting in the support, without people working in an unsupported trench?
- Is there safe access into the excavation (eg a sufficiently long, secured ladder)?
- Are there barriers or other protection to stop people and vehicles falling in?
- Is the excavation fenced off from unauthorised access?
- Are properly secured stop blocks provided to prevent tipping vehicles falling in?
- Could the excavation affect the stability of neighbouring structures or services?
- Are materials, spoil and plant stored away from the edge of the excavation to reduce the chance of a collapse?
- Is the excavation regularly inspected by a competent person?
- Are the results of inspections recorded?

For more information see worksafe.govt.nz

2.4 Working with vehicles and machinery

Traffic, vehicles and plant

- Have prestart checks been done, and any issues dealt with?
- Are vehicles well maintained, and are log books and maintenance records present and up to date?
- Are vehicles only operated by people trained to do so (where applicable) and are manufacturer's instructions followed?
- Are vehicles and pedestrians kept apart?
- If not, do you:
  - provide barriers to separate them as much as you can?
  - display warning signs?
- Are people kept away from slewing vehicles, or, if not, can you use a zero tail swing machine?
- Are vehicles and plant properly maintained, for example:
  - do the steering, brakes, hydraulics, mirrors and any other vision aid work properly?
  - are tyres in good condition and at the correct pressure?
  - are reversing alarms active?

- Can reversing be avoided (eg by using a one-way system or a turning area? If not, are properly trained spotters used)?
- Have drivers received proper training and are they competent and fit to use the vehicles or plant they are operating?
- Are loads properly secured?
- Have you made sure that passengers are only carried on vehicles designed to carry them?
- Have you made sure that plant and vehicles are not used on dangerous slopes?
- If you need to work on or drive across sloping ground, have you checked that the plant and vehicles are safe to use?
- Do you check that securing pins are in place on excavator quick hitches?

Tools and machinery

- Are the right tools or machinery being used for the job?
- Are all dangerous parts guarded (eg gears, chain drives, projecting engine shafts)?
- Are guards secured and in good repair?
- Are tools and machinery maintained in good repair and are all safety devices operating correctly?
- Are all operators trained and competent?

For more information see worksafe.govt.nz

2.5 Critical health risks

Hazardous substances

- Have you identified all harmful substances and materials, such as asbestos, lead, solvents, paints, cement and silica dust (eg from cutting concrete, bricks, rocks etc)?
- Is protective clothing and respiratory equipment provided?
- Have you checked whether a worker with the relevant approval is needed to deal with asbestos on site? (Most work with asbestos requires permission from WorkSafe, although you can do some very limited work with materials that contain asbestos without one.)



- Have you identified and put into place precautions to prevent or control exposure to hazardous substances, by:
  - doing the work in a different way, to remove the risk entirely?
  - using a less hazardous material?
  - using tools fitted with dust extraction?
  - using tools fitted with water suppression?
  - installing warning signs to show where work involving hazardous substances is taking place?
- Have workers had information and training so they know what the risks are from the hazardous substances used and produced on site, and what they need to do to avoid those risks?
- Have you arranged health monitoring for employees exposed to certain hazardous substances (eg lead, silica, cement, sensitisers such as twopack adhesives or coatings)?

For more information see worksafe.govt.nz

Noise

- Have you identified and assessed workers' exposure to noise?
- Have workers had information and training so they know what the risks are from noise on site, and what they need to do to avoid those risks?
- Can the noise be reduced by using different working methods or selecting quieter plant (eg by fitting breakers and other plant or machinery with silencers)?
- Are people not involved in the work kept away from the source of the noise?
- Is suitable hearing protection provided and worn in noisy areas?
- Have hearing protection zones been marked?
- Have you arranged health surveillance for employees exposed to high levels of noise?

Personal protective equipment

- Is suitable equipment provided to protect the head, eyes, hands and feet where appropriate?
- Do workers wear their protective equipment, and do they wear it correctly?
- Have workers been trained in the safe use, care and storage of protective equipment?

For more information see worksafe.govt.nz



2.6 Worker wellbeing

Amenities and facilities

- Has a suitable toilet been provided?
- Is there a clean wash basin, hot/warm water, soap and towel?
- Is wet-weather gear provided for those who have to work in wet conditions?
- Is there a place where workers can take shelter and have meals? Do they have access to drinking water?
- Is there a suitable first-aid kit?

For more information see worksafe.govt.nz

Workloads and fatigue

- Do workers take regular, quality rest breaks in their working day?
- Are working hours reasonable and not too long? If longer working days are required, are start and finish times staggered, and/or are longer rest breaks and periods off work allowed?
- Are tasks scheduled suitably throughout a work period (eg critical jobs are avoided during the low body clock period of 3 pm to 5 pm)?
- Is work scheduled to allow enough time for completion?
- Are monitoring and limitations in place for overtime worked, consecutive night shifts, shift swapping and on-call duties?
- Are jobs rotated to minimise exposure to extreme temperature and excessive mental or physical demands?
- Is fit-for-purpose plant, machinery and equipment used?
- Are workloads practical and manageable, with consideration given to any work flow changes (eg machinery breakdowns or unplanned absences)?

Alcohol and drugs

- Is there a policy and procedure in place to constructively manage alcohol- and other drug-related hazards?
- Are workers monitored for signs of alcohol and drug use (eg dizziness, slurred speech, drowsiness, sudden aggressive or violent behaviour, lack of or impaired coordination/relflexes)?

For more information see worksafe.govt.nz



2.7 Emergency situations

Emergencies

- Are there emergency procedures (eg for evacuating the site in case of fire)?
- Do people on site know what the procedures are and where the nearest emergency centre is?
- Is there a means of raising the alarm, and does it work?
- Is there a way to contact the emergency services from site?
- Are there enough suitable escape routes and are these kept clear?
- Are first aid arrangements good enough for the site, and is there someone available who can administer first aid if needed?

Fire

- Is the quantity of flammable materials, liquids and gases kept to a minimum?
- Are they properly stored (eg are gas cylinders chained in position)?
- Are flammable gas cylinders returned to a ventilated store at the end of the shift?
- Are smoking and other ignition sources banned in areas where gases or flammable liquids are stored or used?
- Are gas cylinders, associated hoses and equipment properly maintained and in good condition?
- When gas cylinders are not in use, are the valves fully closed?
- Is flammable and combustible waste removed regularly and stored in suitable bins or skips?
- Are suitable fire extinguishers provided?

Notes

Disclaimer

This publication provides general guidance. It is not possible for WorkSafe to address every situation that could occur in every workplace. This means that you will need to think about this guidance and how to apply it to your particular circumstances.

WorkSafe regularly reviews and revises guidance to ensure that it is up-to-date. If you are reading a printed copy of this guidance, please check worksafe.govt.nz to confirm that your copy is the current version.

ISBN: 978-0-478-42543-7 (print)
ISBN: 978-0-478-42544-4 (online)

Published: July 2018

PO Box 165, Wellington 6140, New Zealand

worksafe.govt.nz



Except for the logos of WorkSafe, this copyright work is licensed under a Creative Commons Attribution-Non-commercial 3.0 NZ licence.

To view a copy of this licence, visit http://creativecommons.org/licenses/by-nc/3.0/nz

In essence, you are free to copy, communicate and adapt the work for non-commercial purposes, as long as you attribute the work to WorkSafe and abide by the other licence terms.

WSNZ_1211_JUL 2018

ISBN: 978-0-478-42543-7 (print)
ISBN: 978-0-478-42544-4 (online)

WORKSAFE
NEW ZEALAND | MAHI HAUMARU AOTEAROA

Level 6, 86 Customhouse Quay
PO Box 165, Wellington 6140

0800 030 040 worksafe.govt.nz

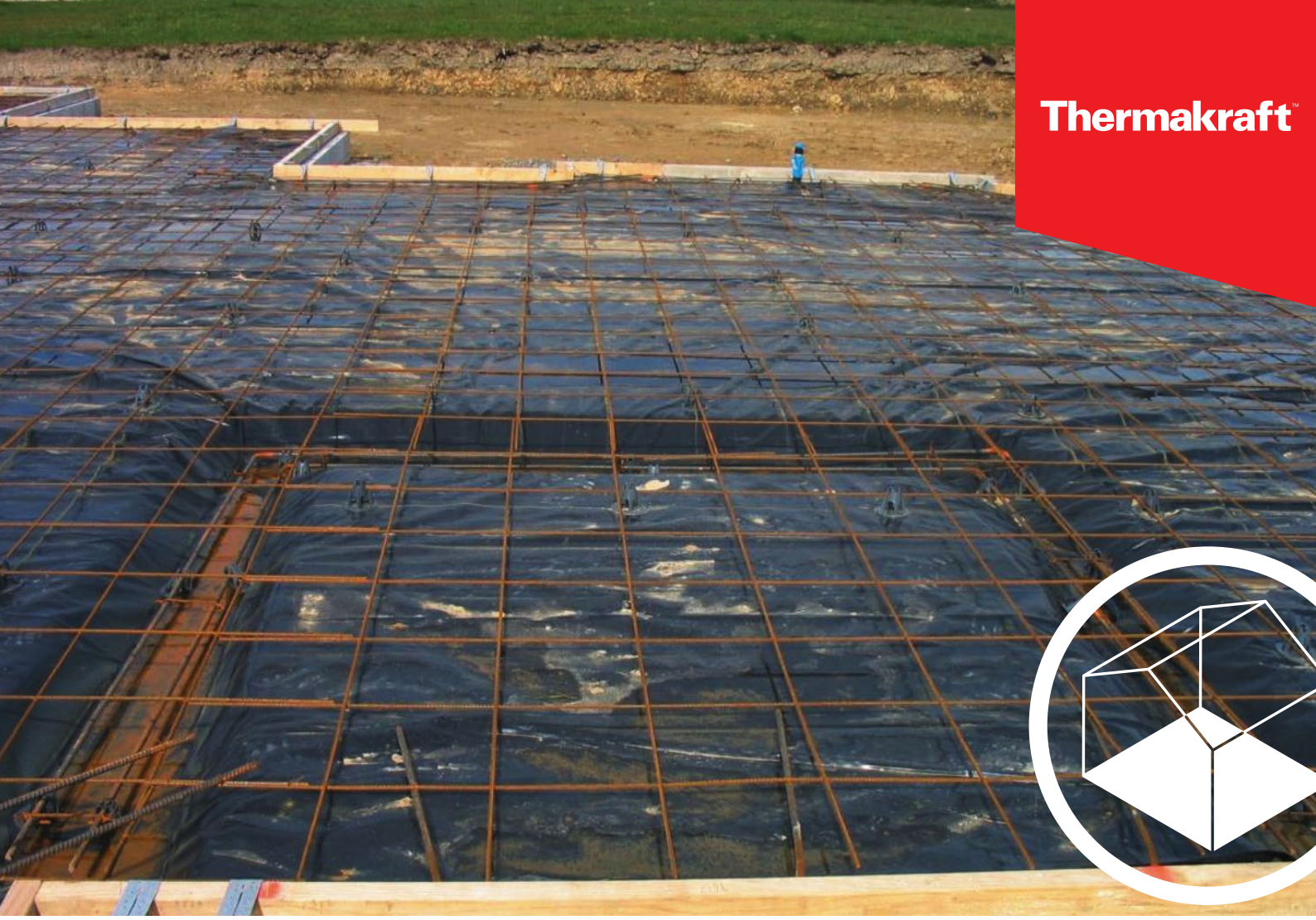

Thermakraft™

Product Data Sheet

THERMATHENE BLACK

Damp Proof Membrane (DPM)

Thermathene Black is a concrete underlay that is made from a tear and puncture resistant polyethylene film. It is commonly known as a Damp Proof Membrane (DPM).

Thermathene Black comes in two roll sizes:

Product Code	Width	Length	Coverage
PF250025	4000mm	25m	100m^2 coverage
PF250050	4000mm	50m	200m^2 coverage

Smarter products. Better buildings.
thermakraft.co.nz

Thermathene Black

Damp Proof Membrane (DPM)

Scope of Use

Thermathene Black intended for use as a damp-proof membrane separating concrete slab from ground soil. The product acts as a vapour barrier to stop ground moisture penetrating the concrete. Thermathene Black must be sealed with Thermakraft White General Purpose tape at the laps joints to form a complete vapour barrier.

General

- Unaffected by LOSP treated timber. However, LOSP treated timber must have sufficient time for the solvent chemical to flash off in well ventilated area. Recommended minimum 7 days.
- 4m x 25m [100m2] and 4m x 50m [200m^2] unfolded size.
- 250 Micron in thickness.

Limitations

- Maximum weather or UV exposure is 28 days.
- Cannot be used as a roof or wall underlay.

Compliance

Thermathene Black is an acceptable solution as per the requirements of the NZBC. Thermathene Black meets the requirements of NZBC 3604:2011 Clause 7.5.4.2, NZBC Acceptable Solutions E2/AS1, Table 23 and NZS 4229:2013 Clause 7.4 & 7.6.

When Thermathene Black is used and installed as a damp-proof membrane as per Thermakraft's literature, the product will meet or contribute to meeting the following provisions of the NZBC: Clause B2 Durability: Performance B2.3.1 (a), 50 years, Clause E2 External Moisture: Performance E2.3.3 & Clause F2 Hazardous Materials: Performance F2.3.1.

Product Warranty

Standard Thermakraft warranty applies. Refer to Thermakraft Warranty Statement for further details. This is available online at **thermakraft.co.nz** or call **0800 806 595.**

Thermakraft Limited / 0800 806 595

Smarter products. Better buildings.

thermakraft.co.nz

The recommendations contained in Thermakraft's literature are based on good building practice, but are not an exhaustive statement of all relevant information and are subject to any conditions contained in the Warranty. All product dimensions and performance claims are subject to any variation caused by normal manufacturing process and tolerances. Furthermore, as the successful performance of the relevant system depends on numerous factors outside the control of Thermakraft (for example quality of workmanship and design), Thermakraft shall not be liable for the recommendations in that literature and the performance of the Product, including its suitability for any purpose or ability to satisfy the relevant provisions of the Building Code, regulations and standards. Literature subject to change without notification. Latest documentation can be found on the website. E&OE.

Issue 4, November 2019

Thermakraft™



Installation Guide

THERMATHENE BLACK

Damp Proof Membrane (DPM)

Thermathene Black is a concrete underlay that is made from a tear and puncture resistant polyethylene film. It is commonly known as a Damp Proof Membrane (DPM).

Product usage

Thermathene Black is used as a concrete underlay and a moisture vapour barrier in areas where protection is required. The product is 250 microns in thickness and is coloured black. Thermathene Black may also be used under suspended subfloors as ground protection from rising damp.

Smarter products. Better buildings.
thermakraft.co.nz

Installation Guide

Application Method

- Thermathene Black should be installed in accordance with the requirements of NZS3604:2011 and must be laid on a properly prepared base as required by NZS3604:2011 Section 7.5.3 to 7.5.6.2.
- Thermathene Black must be laid in a continuous manner with all laps minimum 150mm, and penetrations to be taped with Thermakraft White General Purpose Tape.
- Thermathene Black should be laid in a neat fashion with a smooth surface, with as many of the ripples as possible eliminated.
- Thermathene Black must be inspected for any damage (tears or pentrations) prior to concrete placement. Any damage must be repaired with Thermakraft White General Purpose Tape, for any larger damage a patch of Thermathene Black maintaining a 150mm lap.
- Thermathene Black must not be left exposed for more than 28 days.
- Thermathene must be installed by a licensed building practitioner.
- Thermathene Black may also be used to cover ground areas under suspended timber floors to prevent the rise of dampness. Ensure that the site is clear of rubbish, sharp edges such as rocks or bricks. Slit and patch around jack studs or pipe work. All penetrations and joints must be taped.

Handling and Storage

Thermathene Black must be handled with care to prevent damage, the product must be stored under cover well away from direct moisture, rainfall contact and sunlight (UV). Care should be taken not stack other materials on top of the product.

Thermakraft Limited / 0800 806 595

The recommendations contained in Thermakraft's literature are based on good building practice, but are not an exhaustive statement of all relevant information and are subject to any conditions contained in the Warranty. All product dimensions and performance claims are subject to any variation caused by normal manufacturing process and tolerances. Furthermore, as the successful performance of the relevant system depends on numerous factors outside the control of Thermakraft (for example quality of workmanship and design), Thermakraft shall not be liable for the recommendations in that literature and the performance of the Product, including its suitability for any purpose or ability to satisfy the relevant provisions of the Building Code, regulations and standards. Literature subject to change without notification. Latest documentation can be found on the website. E&OE.

Issue 1, November 2019



Thermakraft™

Product Data Sheet

COVERTEK 405

Self-supporting roof and wall underlay

Covertek 405 is a premium synthetic roof and wall underlay designed as a means of managing condensation, water vapour transfer and water ingress. It is self-supporting, stable and shrink resistant and can be installed in applications where the roof pitch is 3° and above.

Covertek 405 comes in three roll sizes:

1250mm wide	20m long	25m² Coverage[2]
1250mm wide	40m long	50m² Coverage[2]
2550mm wide[1]	29.4m long	75m² Coverage[2]

Cut to Length available – Contact your Thermakraft Representative.

1 **Note:** made to order.
2 **Note:** m² is the roll size for actual coverage, allow for laps and joins.

Smarter products. Better buildings.
thermakraft.co.nz

CodeMark GM-CM30030

BRANZ Appraised
Appraisal No.743 [2019]

Covertek 405

Self-supporting roof and wall underlay

Scope of Use

Roof Application

- Suitable with masonry tile, metal tile and profiled metal roof cladding.
- Suitable for timber or steel framed buildings.
- Can be used on roofs up to and including NZS 3604 'Extra High' wind zones.
- Self-supporting - Refer to installation guide regarding underlay support requirements.
- Not suitable for roof pitch less than 3 degrees.
- Will provide temporary weather protection during construction (maximum 7 days), same day coverage recommended.

Wall Application

- Can be used with timber and steel framing, either direct or in conjunction with an 18mm minimum drained cavity.
- Suitable with absorbent (e.g. timber, brick or fibre cement) or non-absorbent wall claddings (e.g. metal or plastic).
- Suitable with masonry veneer in accordance with NZBC Acceptable Solution E2/AS1 or NASH Building Envelope Solutions.
- Is suitable for use in Wind Zones of NZS 3604 up to and including 'Very High' when used as a standalone flexible underlay, and 'Extra High' when used as a flexible underlay over a rigid wall underlay.
- Is suitable as an air barrier in unlined wall spaces.
- Will provide some temporary weather protection during construction (maximum 60 days for wall application).

General

- Is fire retardant.
- Unaffected by LOSP or other solvent based treated timber. However, LOSP or other solvent based treated timber must have sufficient time for the solvent chemical to flash off in a well ventilated area. Recommended minimum 7 days.
- Tear resistant and strong.

Limitations

- Must NOT be exposed to the weather or UV for more than 7 days as a roof underlay and 60 days as a wall underlay.
- Must not be used under translucent sheeting.

Compliance

Roof Application

- Can be used as an underlay within the scope limitations of NZBC Acceptable Solution E2/AS1, Paragraph 1.1, with regards to building height and floor plan area.
- Or within the scope limitations of NASH Building Envelope Solutions, Paragraph 1.1 for steel framed buildings.
- Refer BRANZ Appraisal No 743 (2019) and CodeMark Certificate GM-CM30030 for full details.
- CodeMark Certification only covers roof application.

Wall Application

- Can be used as a wall underlay within the scope limitations of NZBC Acceptable Solution E2/AS1, Paragraph 1.1, with regards to building height andvfloor plan area.
- Or within the scope limitations of NASH Building Envelope Solutions, Paragraph 1.1 for steel framed buildings.
- Refer to BRANZ Appraisal No 743 (2019) for full details.

Flammability Index

Thermakraft Covertek 405 Underlay has an AS 1530 Part 2 Flammability Index of not greater than 5 and therefore meets the requirements of NZBC Acceptable Solutions C/AS2 to C/AS6, Paragraph 4.17.8 b), for the surface finish requirements of suspended flexible fabric used as an underlay to exterior cladding that is exposed to view in occupied spaces.

Durability

Meets the Performance Requirements of NZBC Clauses B2, Durability (B2.3.1 (a) 50 years, B2.3.1 (b) 15 years and B2.3.2), C3 Fire affecting areas beyond the fire source C3.4 (c) E2 External Moisture, and F2 Hazardous Building Materials F2.3.1/C, providing:

- It is not damaged.
- Is installed in accordance with instructions.
- Is not left exposed for more than 7 days (roof), same day coverage recommended.
- Is not left exposed for more than 60 days (wall)
- Is installed by or under guidance of Licensed Building Practitioners.
- Is compatible with cladding system used.*

* **Note:** specifiers and product users must test for roof cladding system compatibility with the underlay before installation.

Covertek 405

Self-supporting roof and wall underlay

Control of Condensation

In climatic regions where condensation risks are high, such as cold or high humidity areas, care needs to be taken in specifying the correct design and installation to prevent moisture build-up in the roof cavities.

Factors which adversely affect the condensation risk in roofing systems include:

- Humid, and/or cold climatic regions.
- Warm/Skillion roof construction.
- Low roof cavity air volume and restricted air movement.
- Omitting Vapour Control Layers.
- Occupancy activities which have high moisture loading on conditioned spaces.
- Ceiling penetrations and entry of warm air into roof cavities.
- Low pitched roof.
- Bulk insulation.
- Building structures ability to naturally dry construction moisture.

Skillion and Warm Roof Construction are particularly sensitive to moisture accumulation and the design and installation of roof construction needs to take into account the higher condensation risks. Refer to the NZ Metal Roof and Wall Cladding Code of Practice (COP) for details.

For passive ventilation of the roof space, it is recommended that all roof underlays are terminated at the ridge, and if not it should be slit or slotted to allow for passive ventilation. For further information refer to the NZ Metal Roof and Wall Cladding COP.

Property Performance

NZBC E2/AS1 Table 23 (NZS2295) Wall Underlay Properties	Absorbency	Vapour Resistance	pH of Extract	Shrinkage	Water Resistance	Air Resistance
Property Performance Requirement	≥ 150gsm	≤ 0.5 MN.s/g	≥ 5.5 and ≤ 8	≤ 0.5%	≥ 100mm	≥ 0.1 MN.s/m3
Property Performance	Pass	Pass	Pass	Pass	Pass	Pass*

* **Note:** Can be used as an air barrier.

Product Warranty

Standard Thermakraft warranty applies. Refer to Thermakraft Warranty Statement for further details. This is available online at **thermakraft.co.nz** or call **0800 806 595.**

Thermakraft Limited / 0800 806 595

Smarter products. Better buildings.

thermakraft.co.nz

CodeMark GM-CM30030

BRANZ Appraised
Appraisal No.743 [2019]

The recommendations contained in Thermakraft's literature are based on good building practice, but are not an exhaustive statement of all relevant information and are subject to any conditions contained in the Warranty. All product dimensions and performance claims are subject to any variation caused by normal manufacturing process and tolerances. Furthermore, as the successful performance of the relevant system depends on numerous factors outside the control of Thermakraft (for example quality of workmanship and design), Thermakraft shall not be liable for the recommendations in that literature and the performance of the Product, including its suitability for any purpose or ability to satisfy the relevant provisions of the Building Code, regulations and standards. Literature subject to change without notification. Latest documentation can be found on the website. E&OE.

Issue 5, September 2020

Roof Safe Mesh Galvanised Steel

Product Technical Statement

SUMMARY OF FEATURES

- A welded galvanised steel wire mesh used as a support for roofing underlays and insulation. It also provides a safety net against falls during initial roof installation and for ongoing maintenance work.
- Suitable for both timber and steel structures.
- Complies with Safety Mesh Standard AS/NZS 4389: 2015.

TECHNICAL INFORMATION

Product Description

Kiwimesh Roof Safe Mesh consists of a welded, mild steel wire mesh with longitudinal wires spaced at 150mm centres and cross wires spaced at 300mm centres.

It is comprised of a 2.0mm diameter galvanised wire with a tensile strength exceeding 450mpa. T

Applications

- Provides fall-through protection during roof installation and ongoing maintenance.
- Suitable for use on timber and steel framing.

Technical Data

Complies with Safety Mesh Standard AS/NZS 4389: 2015:

Limitations

Not to be used for access or as a working platform.

Handling & Storage

Rolls must be stored on end, under cover and protected from moisture. Do not double stack or use to support other materials. Rolls must not be stored on concrete floors for long periods.

Size Range Available

Fixing instructions

Before installation check with the local code of practice for safe work on roofs.

Transverse wires shall be on top of the longitudinal wires.

All longitudinal wires are passed around anchor points with the tail of each wire being twisted four times around the main portion of the same wire.

End joints in wire, two transverse wires are placed together, the longitudinal tail wires (approx 300mm long) are tied around each other, one being twisted four times around the main portion of the same wire, the other longitudinal wire twisted once around the main portion of the same wire then four times around two transverse wires.

Side laps (i) For purlin spacing/span less than 1200mm, the runs of mesh shall be side-lapped by a minimum of one mesh spacing (150mm). (ii) For purlin spacing/span between 1200-2200mm, the runs of mesh shall be side-lapped by a minimum of one mesh spacing (150mm). Side laps shall be secured with ring fasteners fabricated from minimum 1.90mm diameter wire, or equivalent, fitted at maximum 900mm centres between each purlin on one side of the lap. (iii) For purlin spacing/span greater than 2200mm, the runs of mesh shall be side-lapped by a minimum of two mesh spacing (300mm). Side laps shall be secured with ring fasteners fabricated from minimum 1.90mm diameter wire, or equivalent, fitted at maximum 600mm centres between purlin/span on both sides of the lap.

Tautness. Mesh shall be pulled taut to ensure only natural sag between each purlin or roof member.

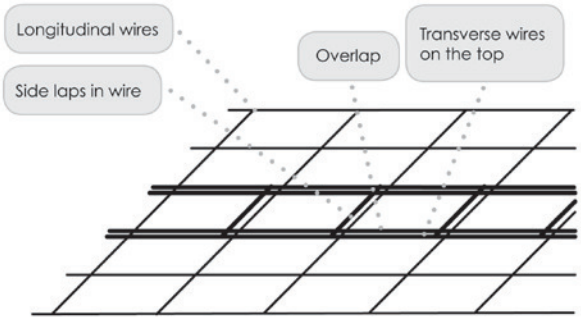

End joints

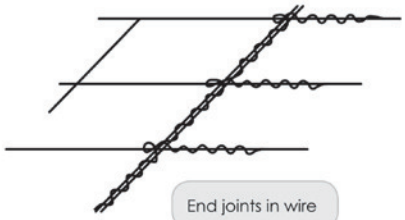

End joints in wire

Steel and timber purlins

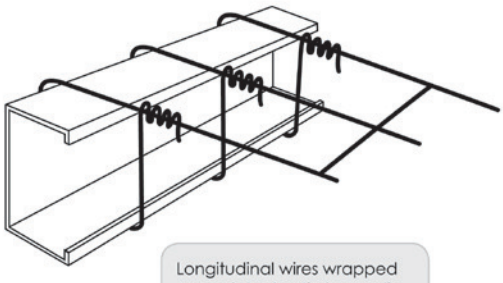

Longitudinal wires wrapped around steel or timber purlin.

Steel purlins

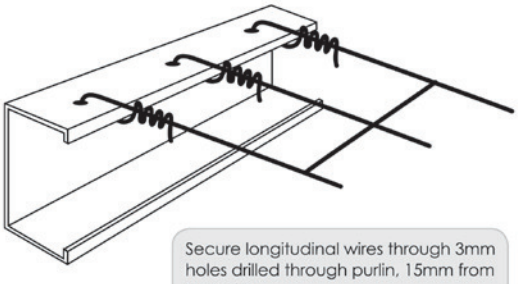

Secure longitudinal wires through 3mm holes drilled through purlin, 15mm from the edge.

Timber purlins

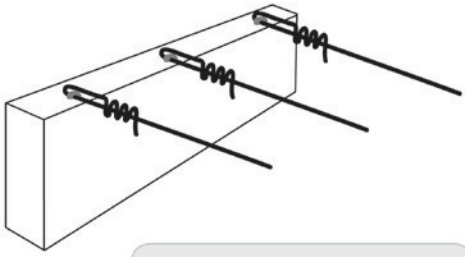

Secure longitudinal wire in position with 40mm long x 3.15mm diameter staples.

KIWIMESH

PAUL Industries

Wall Sheeting

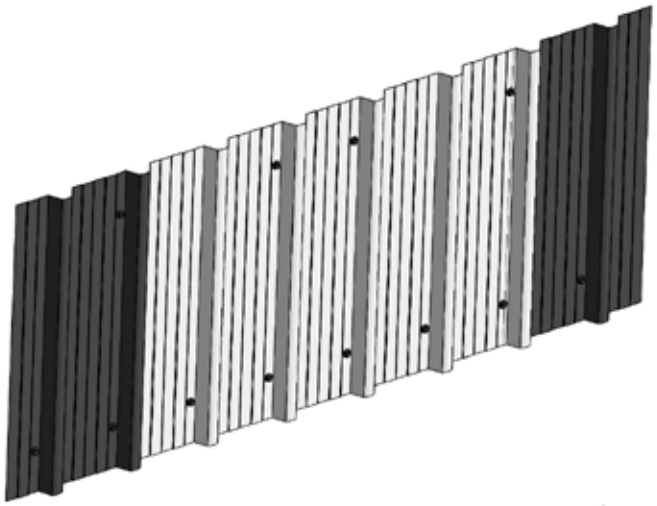

WS1

6 Rib

The cladding for wall sheeting shall be fixed with Cladding Hex Tek #10x16 with neo washers to all walls. On middle girts tek beside every join then miss one, place two. On bottom / top girts tek every pan.

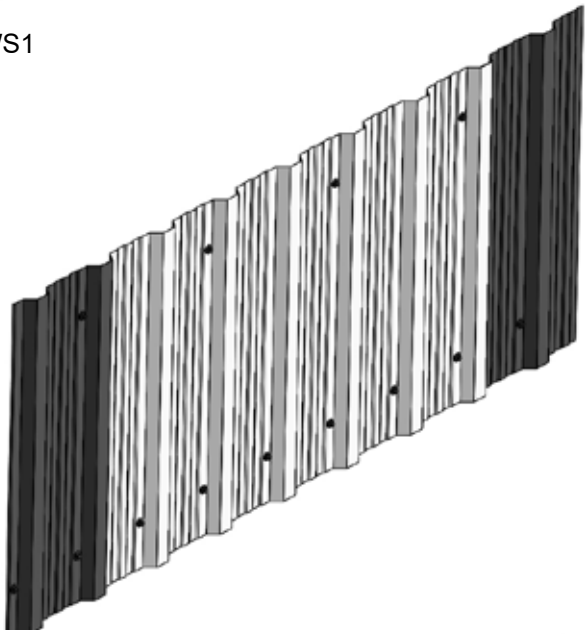

WS2

7 Rib

The cladding for wall sheeting shall be fixed with Cladding Hex Tek #10x16 with neo washers to all walls. On middle girts tek beside every second rib. On bottom / top girts tek every pan.

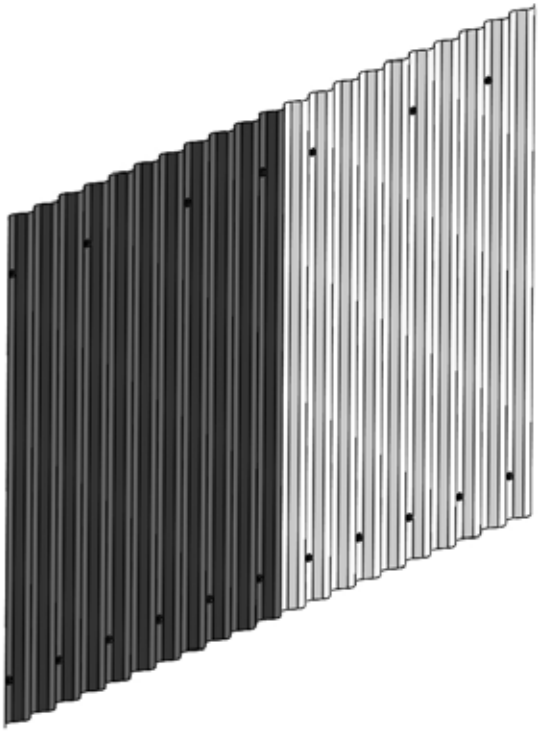

WS3

Corrugate

The cladding for wall sheeting shall be fixed with Cladding Hex Tek #10x16 with neo washers to all walls. On middle girts tek beside every join then miss two, tek one, miss three, tek one. On bottom / top girts tek every second pan.

Roof Sheeting

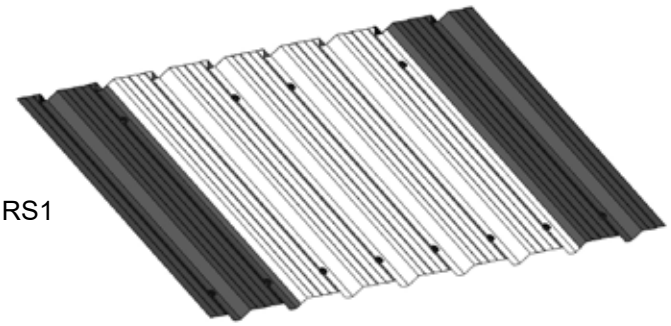

RS1

6 Rib

The cladding for roof sheeting shall be fixed using Cladding Hex Tek #12x45 to all purlins, except the ridge purlin, and extend 50mm into the gutter.

On middle purlins tek rib on every join then miss one, place two. On gutter purlin tek every rib.

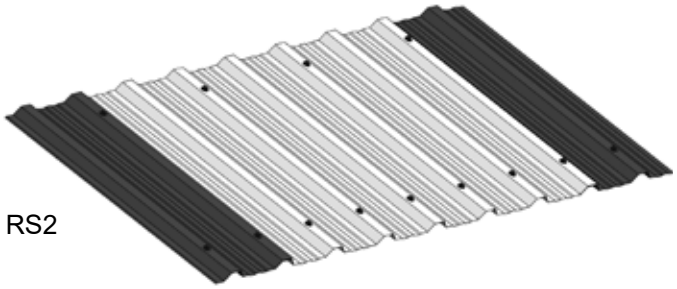

RS2

7 Rib

The cladding for roof sheeting shall be fixed with Cladding Hex Tek #12x35 to all purlins, except the ridge purlin, and extend 50mm into the gutter.

On middle purlins tek every second rib. On gutter purlins tek every rib.

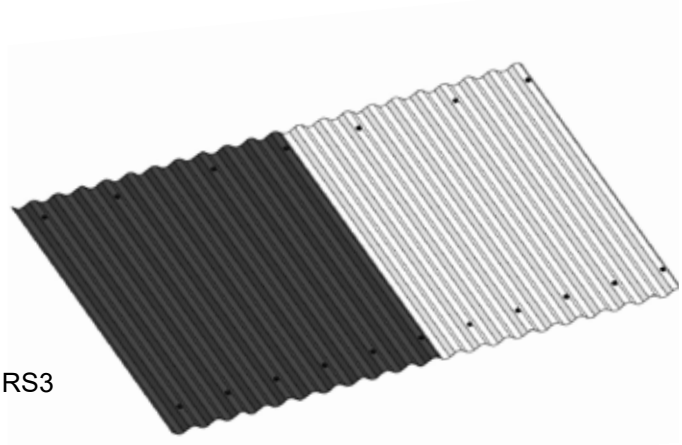

RS3

Corrugate

The cladding for roof sheeting shall be fixed with Cladding Hex Tek #12x35 to all purlins, except the ridge purlin, and extend 50mm into the gutter.

On middle purlins tek on rib at every join then miss two, tek one, miss three, tek one. On gutter purlins tek every second rib.

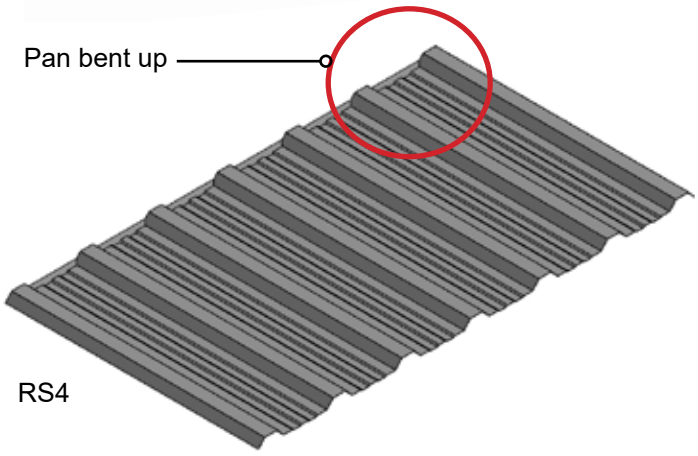

RS4

Pan Detail to Ridge

Roof Sheeting to have pans bent up, as shown, to ridge end. Use a crescent if no suitable bending tool is available.

Translucent Sheet Fixing Details

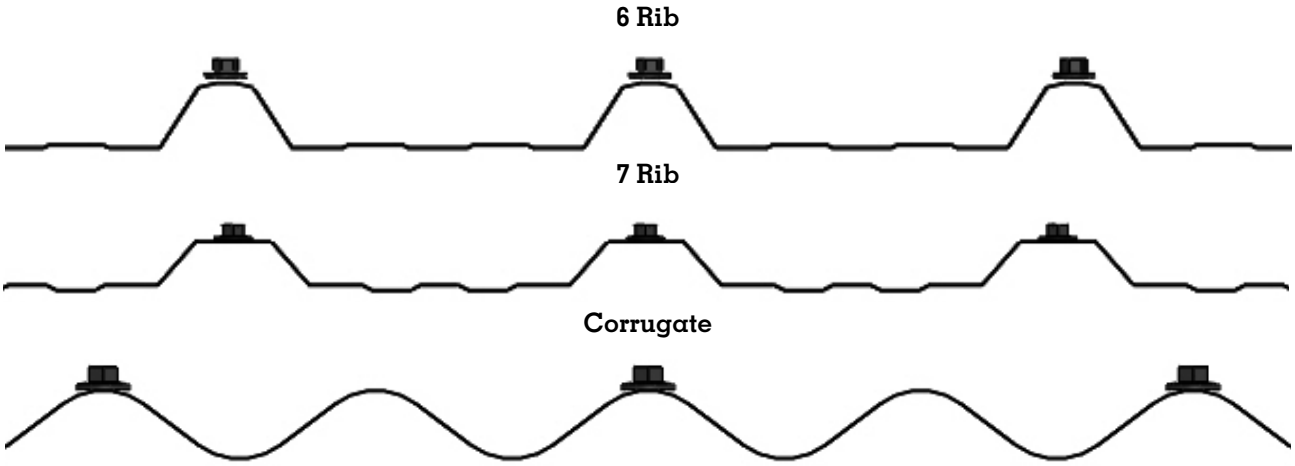

Where wire safety mesh is incorporated under the translucent roof sheeting and where the safety mesh passes over the supporting purlin directly under the fiberglass sheeting, a Protective Purlin Strip (flat fiberglass strip of minimum 1.1mm thickness) must be installed between the translucent sheeting and the safety mesh.

Inseal foam infill to be installed on top of the translucent sheet at the ridge top and ridge fastened over this to provide additional weather sealing.

Site Laps

Each individual translucent sheet is manufactured to overlap and be supported by the adjacent roof or wall cladding sheet.

Fastening Procedure

- In roofing applications, fixings shall be installed through the crest of any profile. Due to the larger expansion and contraction rates of translucent sheeting, oversized fixing holes must be predrilled. Installers must ensure that the fastener is located in the centre of the oversize hole or the benefit of the larger hole is lost. The recommended calculation to ensure the correct hole size used is - 0.75mm per lineal metre, plus the shank size of the fastener. This should be: 7.84 (sheet length) x 0.75=5.88 + 4.5mm (shank size of translucent tek) = 10.38mm 10.5mm holes to be drilled for a 15m span building
- Install screws into translucent sheet in the same manner as metal
- When completed, remove fixings from translucent sheet.
- Using the existing screw hole as a guide, re-drill over sizing the hole
- Re-install the fixing screw. (Note how the screw is centrally located in the hole.)
- It is important not to over tighten the screw putting undue pressure on the translucent sheet. Use only enough pressure that that the translucent fixing screw seal is contoured to the shape of the rib but the rib retains its shape without any sign of buckling.

Note – Top washer is too tight, bottom washer is ok.





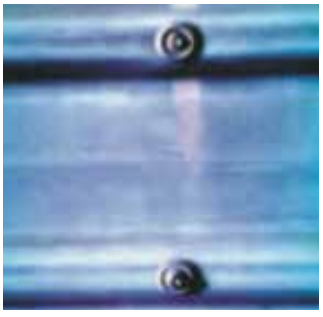

Translucent Sheet Fixing Details contd.

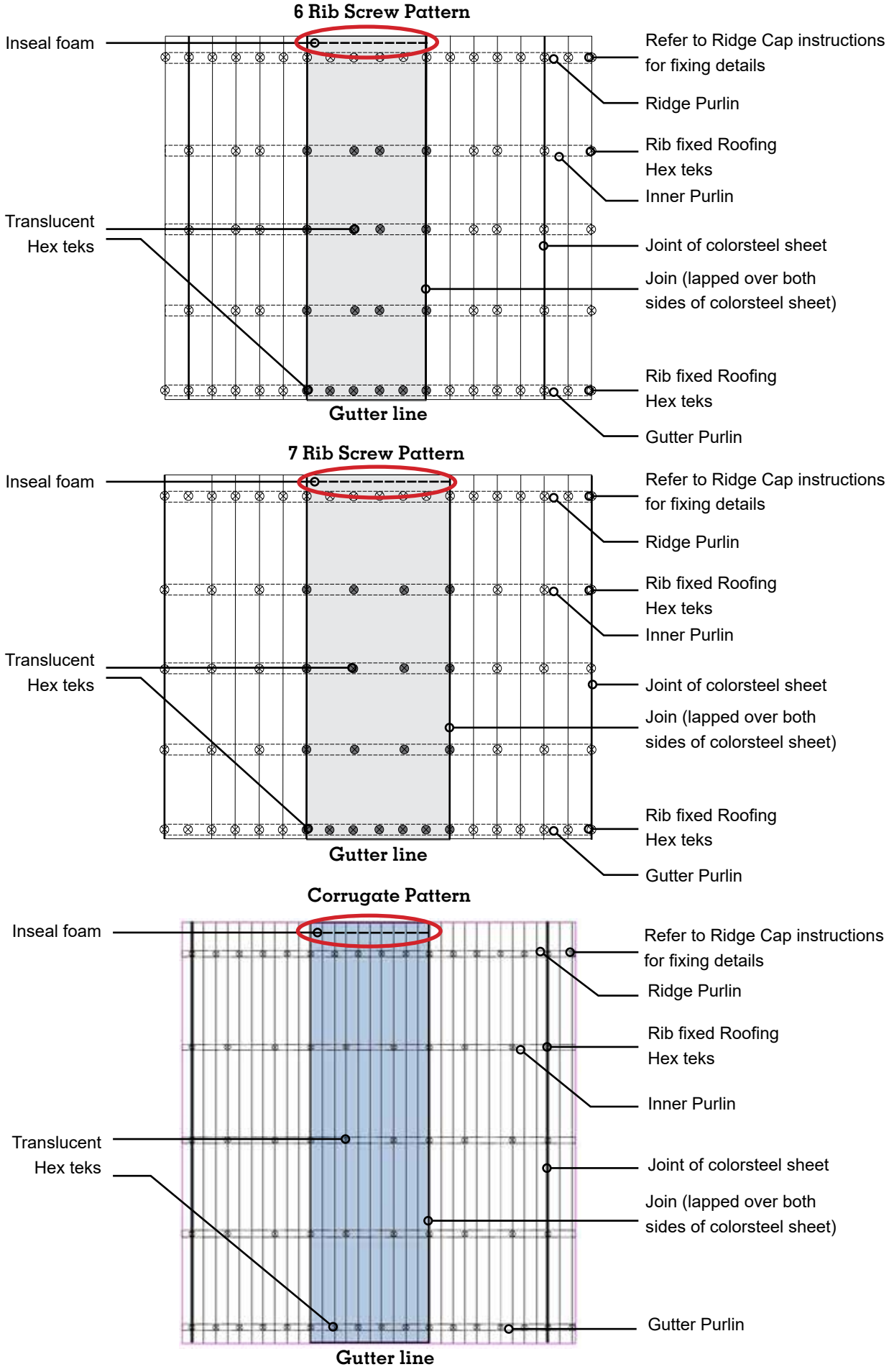

Sediment Control Management Plan

Date: 15/4/2025

Client: Cameron Project

Address: 7 Swindon Lane, Amberley

This erosion and sediment control plan has been prepared in accordance with Environment Canterbury's Builders Pocket Guide (BPG) and Erosion and Sediment Control Guidelines (2007). For more information and guidance on good practice requirements please refer the Builders Pocket Guide website (www.bpg.co.nz).

We propose to manage erosion on the site in the following ways:

- The site is only excavated for the foot print of our building; the rest of the site will remain undisturbed.

" The drive is used for access to and from the site.

- Our buildings are relatively quick to build so the site is kept tidy and rubbish free at all times.

- Our company has instructed our concrete supplier to clean all trucks on site within a bunded area.

- Our contract manager will also assess the site for sediment control before works begin to ensure appropriate measures are in place.

Totalspan Stormwater Management Plan

Date: 15/4/2025

Client: Cameron Project

Address: 7 Swindon Lane, Amberley

ROOF AREA OF TS BUILDING: 28m2

GUTTER PROFILE:



PLAN:

The stormwater management plan is to run the 2 x 80mm downpipe into a 100 mm uPVC stormwater pipe and go at 1:100 fall into a soak pit as indicated on the site plan.

Thank you.

SOAK PIT DETAILS

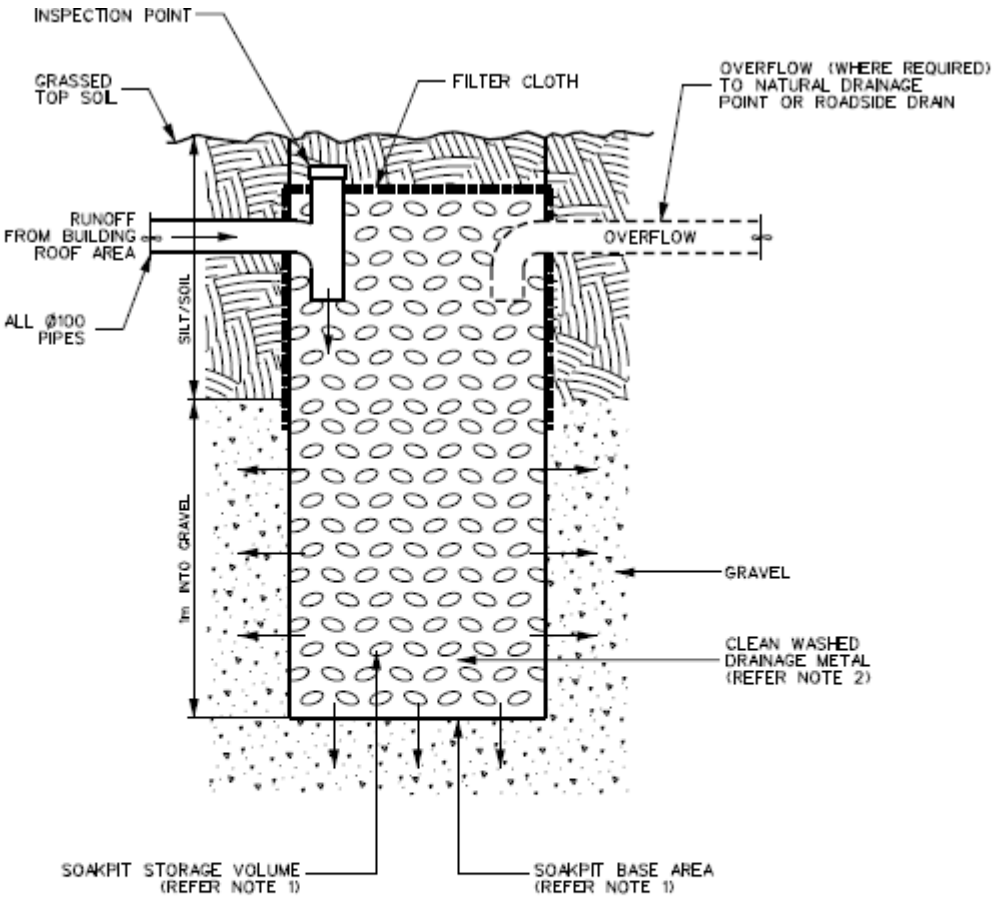

NOTES:

1. SOAK PIT SIZING - PROVIDE 1m² OF BASE AREA PER 100m² OF ROOF AREA AND 2m³ OF STORAGE VOLUME PER 100m² OF ROOF AREA (ALLOW 0.38 FACTOR FOR VOID SPACE) OR ALTERNATIVELY PROVIDE FULL DESIGN CALCULATIONS IN ACCORDANCE WITH VERIFICATION METHOD E1/VM1 SECTION 9.
2. CLEAN WASHED DRAINAGE METAL - TO BE EITHER TAILINGS 20mm-40mm, ROUNDS 40mm-65mm, BOULDERS 65mm-120mm, ROCKS 100mm-150mm OR SIMILAR.

Figure 7: Bedding and backfilling
Paragraphs 5.2.1, 5.3.1 and 5.4.1

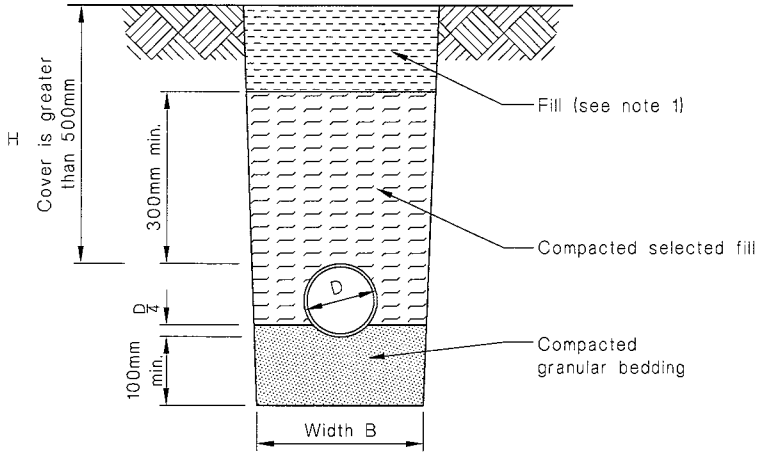

(a) Bedding type 'B' of NZS 7643
Cover greater than 500mm

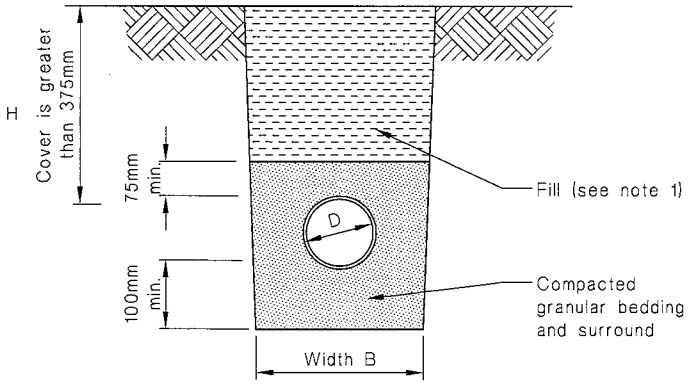

(b) Bedding type 'D' of NZS 7643
Cover greater than 375mm

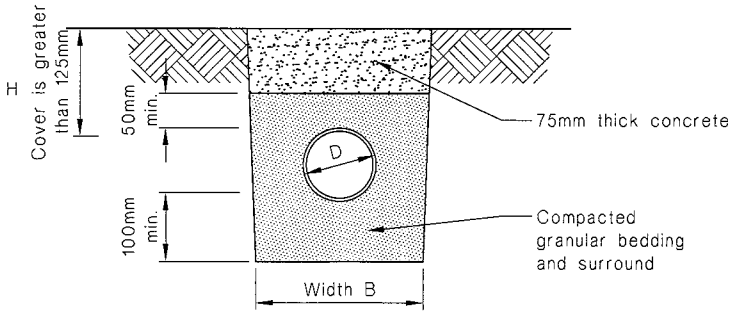

(c) Cover between 125mm and 375mm

NOTE:
1. Fill shall be:
-Ordinary fill where drains are located below gardens and open country.
-Compacted selected fill where the drains are located below residential driveways and similar areas subject to light traffic.

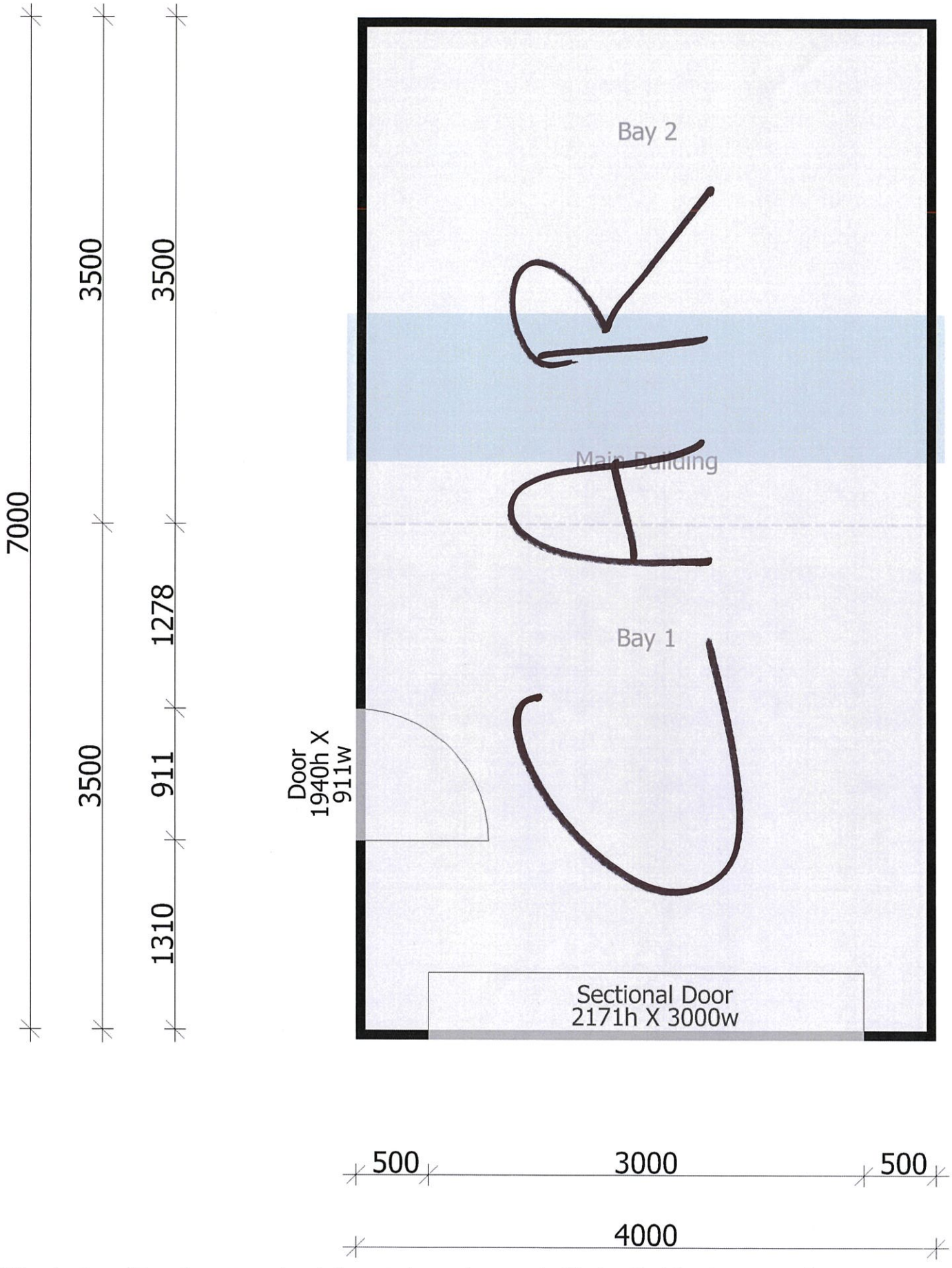

* All Dimensions in mm. Colours shown are examples only. For exact colour samples see your local Totalspan North Canterbury representative.
'NOTE' Drawings are not construction issue. Shop drawings (For Construction) will be detailed prior to fabrication.

Petersen Construction Ltd
127 Main North Road, , Woodend, 7641, New Zealand
Phone: 033100247
Email: northcanterbury@totalspan.co.nz

For:
Don Campbell
7 Swindon Lane

Amberley,
7410

Gable Range
Project Number: JH.309

11 Apr 2025

canterbury maps

Canterbury Maps

Information has been derived from various organisations, including Environment Canterbury and the Canterbury Maps partners. Boundary information is derived under licence from LINZ Digital Cadastral Database (Crown Copyright Reserved). Environment Canterbury and the Canterbury Maps partners do not give and expressly disclaim any warranty as to the accuracy or completeness of the information or its fitness for any purpose.

Information from this map may not be used for the purposes of any legal disputes. The user should independently verify the accuracy of any information before taking any action in reliance upon it.

N

0 0 0 0 0 Kilometres

Scale: 1:100 @A3

Map Created by Canterbury Maps on 15/04/2025 at 1:55 PM

7 Swndon Lane
Amberley

9

Storm water to existing drainage system
2 x 80mm downpipes to a 100mm
uPVC pipe - 1:100 fall

1200

Front

7 x 4 garage

Storm water to soak pit
via 2 x 80mm
downpipes to 100mm
uPVC pipe

Soak pit details and
calcs by NC Drainage

1200

1200

7

Environment Canterbury, Waimakariri DC, LINZ, Environment Canterbury

HURUNUI DISTRICT COUNCIL
P.O. Box 13 | Amberley 7441 | 66 Carters Road | Amberley 7410
Phone: 03 314-8816 | Email: info@hurunui.govt.nz
Web: hurunui.govt.nz | facebook.com/HurunuiDistrictCouncil

PROJECT INFORMATION MEMORANDUM

250126

Section 34, Building Act 2004

THE BUILDING	
Street address of building:	7 Swindon Lane, Amberley
Legal description of land where building is located:	LOT 6 DP 79189
Valuation number:	2143011114
Building Name:	
Location of building within site/block number:	
Level/unit number:	0
THE OWNER	
Name of owner:	Donald Melvern Campbell and Alison Teresa Campbell
Contact person:	Totalspan North Canterbury
Mailing address:	7 Swindon Lane,Amberley
First point of contact for communications with the council/building consent authority:	Totalspan North Canterbury PO Box 58,Woodend 7641 033100247 northcanterbury@totalspan.co.nz
BUILDING WORK	
This project information memorandum is confirmation that the following building work is to be undertaken:	Project: Construction of an IL1 steel framed and steel clad Totalspan building on a concrete slab Current, lawfully established use: Outbuildings

This project information memorandum is confirmation that the proposed building work may be undertaken, subject to the provisions of the Building Act 2004, and any requirements of the building consent attached.

Planning
This is a permitted activity under the Hurunui District Plan.
Utilities
Stormwater: Stormwater discharge to comply with the consent conditions as per Amberley Stormwater Consent CRC082988. Since the proposed shed is less than 30m2, a stormwater discharge application is not required and stormwater from the shed roof can be discharged to soak pit as proposed. At the time of building on the lot, stormwater runoff from buildings and hardstand areas resulting from up to and including the 24hr 2% AEP rainfall event shall be managed so no runoff enters any other property.
Stormwater (cont.): An Erosion and Sediment Control Plan needs to be supplied to the stormwater team for approval before earthworks start.

Signature:

Name: Anne Frankland
Position: Building Support Officer

On behalf of Hurunui District Council
Date: 30 April 2025

Canterbury Maps

Information has been derived from various organisations, including Environment Canterbury and the Canterbury Maps partners. Boundary information is derived under licence from LINZ Digital Cadastral Database (Crown Copyright Reserved). Environment Canterbury and the Canterbury Maps partners do not give and expressly disclaim any warranty as to the accuracy or completeness of the information or its fitness for any purpose.

Information from this map may not be used for the purposes of any legal disputes. The user should independently verify the accuracy of any information before taking any action in reliance upon it.

N

0 0 0 0 0 Kilometres

Scale: 1:100 @A3

Map Created by Canterbury Maps on 15/04/2025 at 1:55 PM

7 Swndon Lane
Amberley

9

7

1200

Front

7 x 4 garage

Storm water to soak pit via 2 x 80mm downpipes to 100mm uPVC pipe

Soak pit details and calcs by NC Drainage

1200

soak pit to be placed minimum 2m distance from garage

1200

Environment Canterbury, Waimakariri DC, LINZ, Environment Canterbury

Action History (UTC+12:00) Auckland, Wellington

Submit

by Brooke Parker 22/04/2025 10:39:15 AM (Message Start Event)

Submit & Save to LF

by Brooke Parker 22/04/2025 10:40:26 AM (Add Consent Number)

- The task was assigned to Building Team - Vetting & Processing 22/04/2025 10:39:15 AM
- Brooke Parker assigned the task to Brooke Parker 22/04/2025 10:39:59 AM

Simpli Application Vetting Checklist

Building Checks

Simpli Submission Number *

HURUN200525

Building Consent Number *

250126

What type of Submission are you vetting ?

- ○ Building Consent
- ○ Solid Fuel Burner
- ○ PIM only
- ○ Amendment
- ○ Certificate of Acceptance
- ◉ Shed
- ○ Marquee

Producer Statements Signed

◉ Yes ○ No ○ N/A

Producer Statements Addressed to HDC

◉ Yes ○ No ○ N/A

Ownership Checks

Proof of Ownsership is current *

Must be less than 3 Months old. Proof of ownership must be a current Record Of Title.

◉ Yes ○ No ○ N/A

Ownership is for Correct Address / LOT / DP

◉ Yes ○ No

Owner Name Matches

◉ Yes ○ No

HDC to search Title

○ Yes ○ No ◉ N/A

If owner is a Business / Organisation is there a contact name ?

○ Yes ○ No ◉ N/A

Drawings / Plans

Site Plan Provided (existing and Proposed)

Including clear site location including boundary and dimensions

◉ Yes ○ No ○ N/A

Site Plan Measurements

from Boundary to Building

◉ Yes ○ No ○ N/A

Floor Plan

◉ Yes ○ No ○ N/A

Elevations

◉ Yes ○ No ○ N/A

Cross Sections

◉ Yes ○ No ○ N/A

Drainage Plans

◉ Yes ○ No ○ N/A

Bracing Plan

◉ Yes ○ No ○ N/A

Bracing Calculations

◉ Yes ○ No ○ N/A

Construction Details

◉ Yes ○ No ○ N/A

Lighting Plan / Statement

○ Yes ○ No ◉ N/A

Risk Score

(Weather tightness / E2 Risk Matrix)

Building Complexity

R1

Truss Design

◉ Yes ○ No ○ N/A

Truss Producer Statement

◉ Yes ○ No ○ N/A

Written Specifications

◉ Yes ○ No ○ N/A

Map Information

Exp Zone

B

Earthquake Zone

3

Wind Zone

Region A

Snow

N4

Altitude

46

Plan Zone

Residential 1A

Application Streamlining Checks

Does the Consent fall into these area's *

- [ ] Flood Assessment Zone
- [ ] Hanmer Springs Design Standards
- [ ] Mt Lyford Design Standards
- [ ] Rural
- [ ] Frost Control Fans Zones
- [x] Urban Amberley / Hanmer Stormwater
- [ ] Liquefaction Zone
- [ ] None of these apply

Urban Amberley / Hanmer Stormwater

Stormwater Application provided *

- ( ) Yes
- ( ) No
- (•) N/A

HURUNUI DISTRICT COUNCIL
P.O. Box 13 | Amberley 7441 | 66 Carters Road | Amberley 7410
Phone: 03 314-8816 | Email: info@hurunui.govt.nz
Web: hurunui.govt.nz | facebook.com/HurunuiDistrictCouncil

BUILDING CONSENT

Form 5, Section 51, Building Act 2004

Building Consent No:	250126	**Issued By:**	Hurunui District Council
Valuation No:	2143011114	**Issued:**	19 May 2025

Street address of building:	7 Swindon Lane, Amberley
Legal description of land where building is located:	LOT 6 DP 79189
Building name:	
Location of building within site/block number:	
Level/unit number:	0

OWNER

Name of owner:	Donald Melvern Campbell and Alison Teresa Campbell
Contact person:	
Mailing Address:	7 Swindon Lane, Amberley
Street address/registered office:	7 Swindon Lane, Amberley
Contact phone number:	0211521186
Contact alternative phone number:	
Contact email address:	alidonnz@gmail.com

First point of contact for communication with the Council/Building Control Authority (BCA):

Totalspan North Canterbury	PO Box 58,Woodend 7641 northcanterbury@totalspan.co.nz

BUILDING WORK

The following building work is authorised by this Building Consent:	Project: Construction of an IL1 steel framed and steel clad Totalspan building on a concrete slab Current, lawfully established use: Outbuildings

This building consent is issued under section 51 of the Building Act 2004. This building consent does not relieve the owner of the building (or proposed building) of any duty or responsibility under any other Act relating to or affecting the building (or proposed building).

This building consent also does not permit the construction, alteration, demolition, or removal of the building (or proposed building) if that construction, alteration, demolition, or removal would be in breach of any other Act.

STANDARD CONDITIONS

This building consent is subject to the following conditions:

Section 90 of the Building Act 2004: Inspections by building consent authorities

(1) Every building consent is subject to the condition that agents authorised by the building consent authority for the purposes of this section are entitled, at all times during normal working hours or while building work is being done, to inspect—

a) land on which building work is being or is proposed to be carried out; and

b) building work that has been or is being carried out on or off the building site; and

c) any building.

(2) The provisions (if any) that are endorsed on a building consent in relation to inspection during the carrying out of building work must be taken to include the provisions of this section.

(3) In this section, inspection means the taking of all reasonable steps to ensure that building work is being carried out in accordance with a building consent.

COMPLIANCE SCHEDULE
The building consent does not require a Compliance Schedule.

ATTACHMENTS		
Copies of the following documents are attached to this Building Consent:	☒Plans and specifications for building work	☒Required items
	☐Section 37 Certificate	☐Section 73 Certificate
	☐Section 75 Certificate	
	☒Project Information Memorandum	
	☐Development Contribution Notice	

Signature: Madeline B

Name: Madeline Blacktopp
Position: Building Support Officer

On behalf of Hurunui District Council

Date: 19 May 2025

HURUNUI DISTRICT COUNCIL
P.O. Box 13 | Amberley 7441 | 66 Carters Road | Amberley 7410
Phone: 03 314-8816 | Email: info@hurunui.govt.nz
Web: hurunui.govt.nz | facebook.com/HurunuiDistrictCouncil

Required Items

(To accompany the Building Consent Document)

Building Consent: 250126

Advice Notes:

This Building Consent should be read in conjunction with the following advice notes:

Building
A minimum of 24hrs notice must be given to the HDC building team prior to requiring an inspection.
Under section 52 of the Building Act 2004 a building consent will lapse in 12 months from date of issue if the building works concerned have not been commenced.
It is recommended that a copy of the approved plans and specifications are kept on site at all times for building contractors.
All Plumbing and Drainage work is to be carried out by suitably qualified tradesman in accordance with the requirements of the Plumbers, Gasfitters and Drainlayers Act.
This is a permitted activity under the Hurunui District Plan
Construction, fixings and materials are to be in accordance with the approved consent documents authorised under the Building Act 2004, any variance may require an application for an amendment.
All boundary site pegs are to be clearly defined and flagged prior to the work commencing and be visible for the building officer at the time of the first inspection.

Council (BCA) inspections required:

Council BCA Inspections required		
No	**Inspection Type**	**Notes**
1	Foundation - Combined concrete footings & slab	
1	Drains	
1	Final - Garages or Farm sheds	
3	Total Inspections	

You will need to provide the following documentation to support your approved building consent:

The following documentation will need to be provided to council before a final inspection is able to be booked:	
Application for CCC	
As-built drainage plan	

A printed copy of all approved plans and specifications must be kept with the building consent. Our building officers need access to the site and plans and specifications before they can carry out an inspection.

How do I book an inspection?

- Please give at least 72 hours' notice prior to any inspection
- HDC will make every attempt to book inspections when required. However, this is not always possible - flexibility is often required. Please note that inspections are not available in all areas every day, please check the table below to see when an inspector will be in your area
- When you call to book an inspection, please supply: Your building consent number, site address, type of inspection, contact name and phone number
- To make a booking for inspection, email building@hurunui.govt.nz or telephone 03 314 8816

Hurunui District Council Building Inspection - days/areas

- Amberley/Leithfield/Waipara areas: Monday - Friday, all days
- Hanmer Springs/Waiau/Culverden/Waikari areas: Monday, Wednesday, Friday

- Omihi/Scargill/Cheviot/Parnassus areas: Tuesday & Thursday

What happens when the building project is finished?

On completion of the project, please complete the Code Compliance Application (Form 6) via the Simpli portal here: https://simpli.govt.nz/login/ and arrange for a final inspection. Applying for the Code Compliance Certificate indicates that consented building work has been completed in accordance with the consent documents.

We look forward to working with you during the construction of your project. Please feel free to contact the Hurunui District Council Building Department to discuss any aspect of your project. Our contact details are Ph: 03 314 8816 or email: building@hurunui.govt.nz

19 May 2025

HDP
MARLBOROUGH DRAINAGE & PLUMBING

As Built Drainage Plan Template

25 | 7 | 25

BC No: ..... Site Address: 7 Swindon Lane Amberley

Assessment No: Stormwater from Shed DP: .....

Plumber: ..... Reg No: ..... Drainlayer: Wayne Service Reg No: 13504

Sewer Laid

Stormwater Laid 1:100 - - - - - -

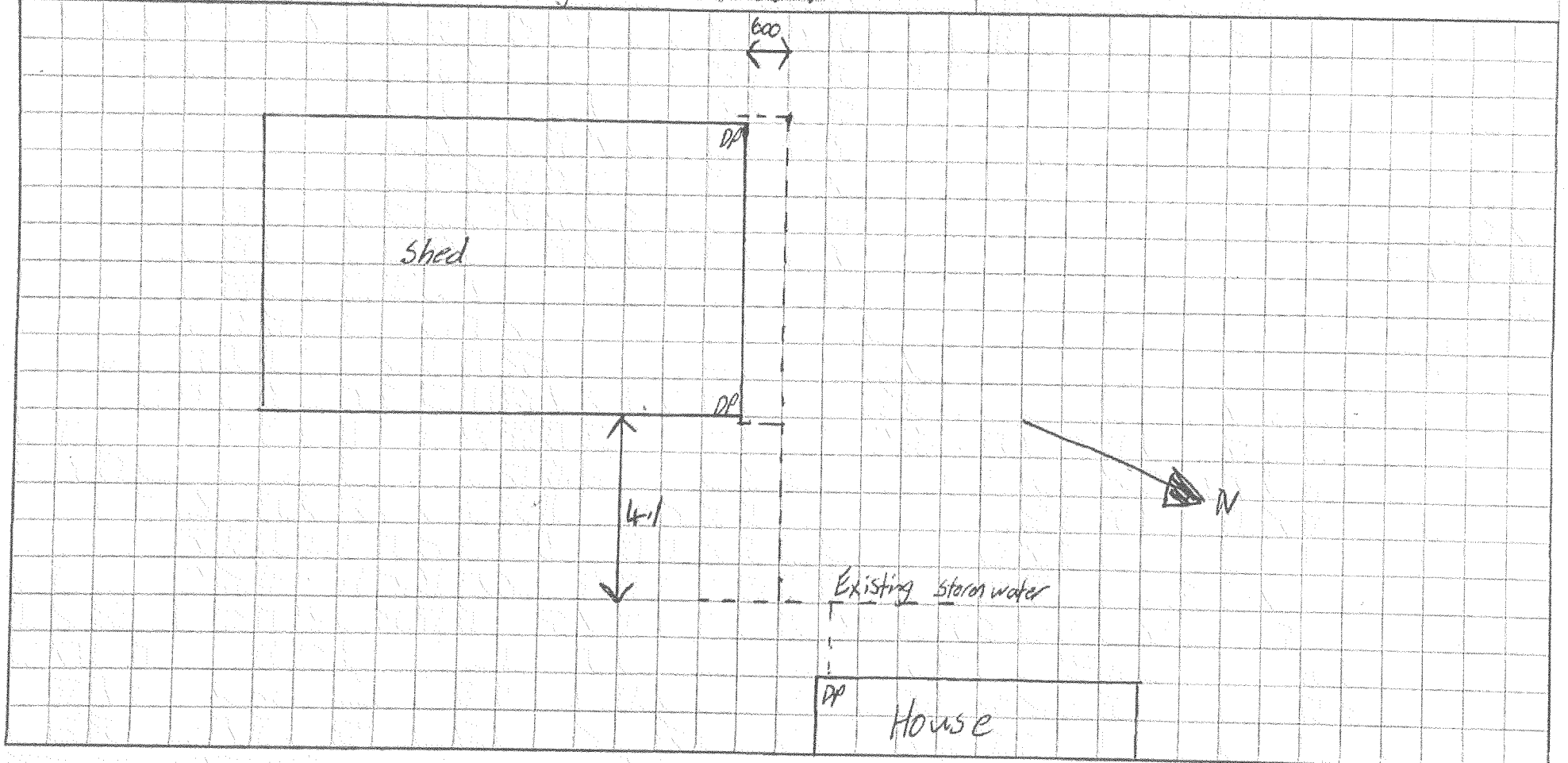

HURUNUI District Council

Compaction Certificate

P O Box 13, Amberley
info@hurunui.govt.nz
Fax: 03 314 9181

Site Address 7 Swindon Lane, Amberley

Client Name Don Campbell

Building Consent Number BC250126

Builder/Contractor Name Campbell Stevenson, Stevenson Earthworks

Address 83 Mulcocks Road, RD1, Kaiapoi

Phone Number 0272203759

LBP Number _____

This is to confirm that on the (date) 4/6/2025 , I/we have placed and compacted AP40 or _____ in layers not exceeding 150mm per layer for the floor slab and finished with 25mm sand blinding on top.

I can confirm that the compacted hard fill in this foundation has been completed to meet the New Zealand Building Standards 3604.

Campbell Stevenson
Signed

Campbell Stevenson
Name

Compliance & Electrical Safety Certificate

This form has been designed to be used by licensed electrical workers to certify low voltage installations or part installations that comply with Part 2 of AS/NZS 3000 and are safe to be connected to a 230/400 volt multiple earth neutral (MEN) system of electrical supply.

Unique ID:	C 10469

(1) Location of installation			
Address:	7 Swindon Lane, Amberley 7410		
(2) Customer Information			
Name:	Don Campbell		
Postal Address:	7 Swindon Lane, Amberley, Canterbury 7410		
Phone:	0211521186	Email:	alidonnz@gmail.com
(3) Electrical Worker Information			
Name:	Dale Mackay		
Registration/Practising Licence Number:	E244139		
Organisation:	Mackay Electrical Services Ltd		
Telephone Number:	64212276848		
Email:	info@mackayelectrical.co.nz		
Name of person(s) being supervised:	Ashley Adams		
(4) Work Details			
The work is:	New work		
The prescribed electrical work is:	General		
Number of lighting outlets:	2	Number of socket outlets:	5
Number of ranges:	0	Number of water heaters:	0
Type of supply system that the installation or part installation is safe to connect to:			230V/400V MEN
The work has been done in accordance with:			Part 2 of AS/NZS 3000
Which parts of the installation, if any, are safe to connect to a power supply:			
All			

Was the work required to comply with standards other than, or in addition to, Part 1 or Part 2 of AS/NZS 3000	No
What was the additional standard used?	

The work includes:	N/A
Description of work?	Install a 20a MCB on the main house switch board. Run 36m of 6mm 2C + E from the switch board, in the ceiling, drilled through the soffit, down the exterior wall into the trench and out to the garage. Install danger labels. Install a 10 way switch board with main switch, RCD & MCBs. Install 1mm 2C + E TPs for a light switch & x2 LED battens. Install 2.5mm 2C + E TPS for x4 sockets. Fit off sockets. Install 2.5 2C +E TPS for a caravan socket & fit off. Install conduit over wiring where necessary.

(5) Certification of Work

I certify that the completed prescribed electrical work to which this certificate applies, has been done lawfully and safely and the information in the certificate is correct in that the installation, or part of the installation:

has an earthing system that is correctly rated, contains fittings which are safe to connect to a power supply, has been satisfactorily tested in accordance with Electricity (Safety) Regulations 2010, is safe to connect

Electronic reference:	N/A

Test Results:		
Polarity (independent earth):	Pass	
Insulation resistance:	299M +	
Earth continuity:	Less than 0.5ohms	
Bonding:	Less than 0.5ohms	
Other (specify):	RCD	

Name:	Dale Mackay	Registration Licence Number:	E244139
Electrical Worker's Signature:	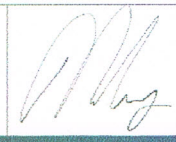	Date:	9/10/2025

(6) Electrical Safety Certificate

I certify that the installation, or part of the installation, to which this Electrical Safety Certificate applies is connected to a power supply and is safe to use

Which part does this ECS relate to: See Section 4 above for detail:	Whole installation

Name:	Dale Mackay	Registration Licence Number:	E244139

Electrical Worker's Signature:	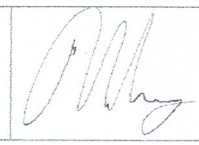	Date:	9/10/2025

CUSTOMER COPY – THIS IS AN IMPORTANT DOCUMENT AND SHOULD BE RETAINED

Code Compliance Certificate - Form 6 - HURUN209696

Submission Details

Submission Ref	HURUN209696
Status	Accepted
Building Complexity	R1
Is Complete	Yes
Date Submitted	Wed 6 Aug 2025, 4:45 PM
Building Consent Authority	Hurunui District Council
Site Address	7 Swindon Lane, Amberley
Parent Consent Number	250126
Submitter	Totalspan North Canterbury (Stephanie Carter)
Legal Description	LOT 6 DP 79189

Code Compliance Certificate - Form 6

Section 92, Building Act 2004

How to complete this form:

1. Completed sections turn green
2. The submit button become available after all sections has been completed
3. Required fields are marked with an asterisk (*)
4. You can save and close the application if you need to complete it later
5. The review and submit buttons takes you to the final step before you submit the application.

Quick Tip:

If you opened this application form from the main submission screen, there might be a better way of submitting this application.

If you/your organisation made the building consent application or was added as a collaborator to the building consent, please link this supplementary application to the building consent by:

- Cancelling this form
- Open the building consent
- Open the forms tab
- Select “New Submission”

This will ensure all your supplementary applications are linked to the building consent, making it easier for you to manage.

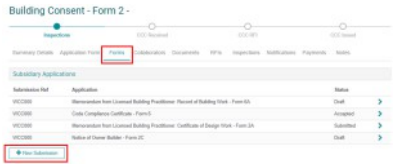

Building Consent Information

Building consent number *
250126

Issued by *
Hurunui District Council

All building work to be carried out under the building consent was completed on *
30/07/2025

Where Is The Building

What is the street address *
7 Swindon Lane, Amberley

Legal Description *
LOT 6

Deposited Plan
DP 79189

Building Name

Location of building within site/block including near street access
as per attached site plan

Who Owns The Building

Owner name *

Donald Melvern Campbell and Alison Teresa Campbell

If the property is owned by an organisation, capture the organisation's name.

Owner title

Owner's contact person

Required if the owner is an organisation

Owner email address *

alidonnz@gmail.com

Owner contact number: *

0211521186

Owner mobile number

Owner's street address *

7 Swindon Lane
Amberley

Owner mailing address *

7 Swindon Lane
Amberley

Proof of Ownership

The Building (Forms) Regulations 2004 requires evidence of ownership to be provided, proof of ownership less than 3 months old ensures the ownership is current.

Proof of ownership *

- ◉ Record of Title (RT)
- ○ Other

Click here to request a RT from from Land Information New Zealand.

Request a Record of Title (RT) from the Building Consent Authority (BCA) or Council *

- ○ Yes
- ◉ No

Check with the Building Consent Authority (BCA) before requesting a RT directly from them.

Who Is The Applicant

Is the application being made on behalf of the owner *

- (•) Yes
- ( ) No

Agent Contact Information

Please note that the nominated first point of contact must be in New Zealand.

Who is the first point of contact for further correspondence? *

- ( ) Owner
- (•) Agent
- ( ) Other

Who is the first point of contact for invoicing *

- ( ) Owner
- (•) Agent
- ( ) Other

Who should invoices be made out to? *

Don Campbell

The code compliance certificate should be sent to *

- ( ) Owner - owner address as per section "Who Owns The Building"
- (•) Agent - agent address as per section "Who Is The Applicant"

Agent name *

Totalspan North Canterbury

If the agent is an organisation, capture the organisation's name

Agent title

Agent's Contact person

Stephanie Carter

Required if the agent is an organisation

Agent's relationship to owner *

owner has authorised us to be their agent on this project

Agent email address *

northcanterbury@totalspan.co.nz

Agent contact number *

033100247

Agent mobile number

Agent street address *

127 Main North Road,
Woodend 7610,
New Zealand

Agent mailing address *

P O Box 58,
Woodend 7641,
New Zealand

Who Completed The Building Work

Select who completed the building work *

- [ ] Licensed Building Practitioner
- [x] Other

If there are others who were involved in the build who aren't licensed building practitioners, please provide their details by selecting the other option.

Tradespeople who carried out building work other than restricted building work is/are

Name * Colin Connor

Company Totalspan North Canterbury

Email address * northcanterbury@totalspan.co.nz

Contact number * 033100247

Street address * 127 Main North Road Woodend

Mailing address * P O Box 58 Woodend

Trade * Other

Other builder

Registration number

Insert registration number if applicable i.e. plumber or gasfitter registration number.

Tradespeople who carried out building work other than restricted building work is/are

Name * Spanbild NZ Ltd

Company

Email address * headoffice@spanbild.co.nz

Contact number * 033495700

Street address * 112 Waterloo Road Christchurch

Mailing address * P O Box 11013 Christchurch

Trade * Designer

Other

Registration number

Insert registration number if applicable i.e. plumber or gasfitter registration number.

Tradespeople who carried out building work other than restricted building work is/are

Name * Ryan Moreau

Company Spanbild NZ Ltd

Email address * headoffice@spanbild.co.nz

Contact number * 033495700

Street address *
112 Waterloo Road
Christchurch

Mailing address *
P O Box 11013
Christchurch

Trade *
Engineer

Other

Registration number
CPEng 1013731

Insert registration number if applicable i.e. plumber or gasfitter registration number.

Tradespeople who carried out building work other than restricted building work is/are

Name *
Wayne Service

Company
Hurunui Drainage & Plumbing

Email address *
info@hdpltd.co.nz

Contact number *
03 314 9934

Street address *
239 Lawcocks Road, RD1, Amberley 7481

Mailing address *
P O Box 139 Amberley 7441

Trade *
Other

Other
Drainlayer

Registration number
13504

Insert registration number if applicable i.e. plumber or gasfitter registration number.

Electrician - Dale Mackay (reg # E244139)

What Specified Systems Are In The Building?

Are there any specified systems in the building? *

○ Yes ◉ No

Have You Attached All Required Documents

Document Upload Process

Only one document can be uploaded against each document category. You need to merge all documents into a single PDF per category (e.g. all architectural plans must be merged into a single document).

Several free online PDF merger tools are available on the internet one such tool is Smallpdf. With Smallpdf, you can merge documents into a single file.

For a full list of the document categories and what should be included in each category click **here.**

Click **here** for help and frequently asked questions.

A complete CCC application requires the information listed below (if applicable):

- Memorandum of Licensed Building Practitioners Record of Work (for each type of building work completed)
- Certificates relating to energy work
- Current manufacturer's certificate(s) relating to modular components

Supporting information may also be required including (but is not limited to):

- Evidence that specified systems can perform to the performance standards set out in the building consent
- Other documents from personnel who carried out the work
- Refer to your building consent approval letter for a full list of documents required to support your CCC application.

If you have already uploaded documents to the building consent you do not need to upload it again.

Quick Tip:

If you/your organisation made the building consent application or was added as a collaborator to the building consent, you can view the documents already submitted by:

- Opening the building consent
- Open the documents tab
- The BCA has received documents with a received date.



CCC Documentation can be uploaded through either the Building Consent Form 2 or the CCC Form 6, after the Application has been submitted to the BCA

Select the following option to attach a record of work *

☑ Attached a PDF to this application	☑ The LBP will complete the form online	☐ No records of work are required

Record Of Building Work

Declaration

Privacy Information

The information you have provided on this form is required so that your application can be processed under the Building Act 2004. The Council, Territorial Authority (TA) or Building Consent Authority (BCA) collates statistics relating to building work and has a statutory obligation to provide information to third parties. The information is stored on a public register, which must be supplied to whoever requests the information. Under the Privacy Act 2020, you have the right to see, and correct personal information Councils, TAs and BCAs holds about you.

You can view the Simpli Privacy Statement here

In providing this information, you agree to your details being used for customer surveys carried out by the Council, BCA or TA.

Terms of Use

By making this submission you agree to the Simpli portal terms and conditions.

Your application fees

The Council, BCA or TA may charge fees for your application. These will include statutory levies to BRANZ and the Ministry of Business, Innovation & Employment.

A fee schedule can be found on the BCA's website, refer to the link in the details panel on the right. Your fees will be advised when the BCA accepts your submission.

Statutory declaration

I request that you issue a code compliance certificate for this work under section 95 of the Building Act 2004.

☑ * **I acknowledge and agree with the above statements.**

Name *

Stephanie Carter, Totalspan North Canterbury

Date *

06/08/2025

Submitter Declaration

Submitter Name

Stephanie Carter

Date

06/08/2025

I understand that by ticking the following boxes, I am agreeing to the following statements:

☑ * **As the agent I confirm that I am submitting this application on behalf of and with the authority of the owner and confirm that all the information within the application is, to the best of my knowledge, true and correct.**

☑ * **I request that you issue a code compliance certificate for this work under section 95 of the Building Act 2004.**

Code Compliance Certificate - Form 6 - HURUN209696

Submission Details

Submission Ref	HURUN209696
Status	Accepted
Building Complexity	R1
Is Complete	Yes
Date Submitted	Wed 6 Aug 2025, 4:45 PM
Building Consent Authority	Hurunui District Council
Site Address	7 Swindon Lane, Amberley
Parent Consent Number	250126
Submitter	Totalspan North Canterbury (Stephanie Carter)
Legal Description	LOT 6 DP 79189

Code Compliance Certificate - Form 6

Section 92, Building Act 2004

How to complete this form:

1. Completed sections turn green
2. The submit button become available after all sections has been completed
3. Required fields are marked with an asterisk (*)
4. You can save and close the application if you need to complete it later
5. The review and submit buttons takes you to the final step before you submit the application.

Quick Tip:

If you opened this application form from the main submission screen, there might be a better way of submitting this application.

If you/your organisation made the building consent application or was added as a collaborator to the building consent, please link this supplementary application to the building consent by:

- Cancelling this form
- Open the building consent
- Open the forms tab
- Select “New Submission”

This will ensure all your supplementary applications are linked to the building consent, making it easier for you to manage.

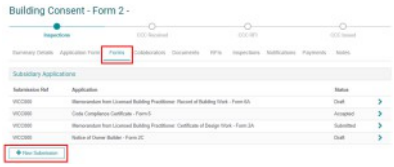

Building Consent Information

Building consent number *
250126

Issued by *
Hurunui District Council

All building work to be carried out under the building consent was completed on *
30/07/2025

Where Is The Building

What is the street address *
7 Swindon Lane, Amberley

Legal Description *
LOT 6

Deposited Plan
DP 79189

Building Name

Location of building within site/block including near street access
as per attached site plan

Who Owns The Building

Owner name *

Donald Melvern Campbell and Alison Teresa Campbell

If the property is owned by an organisation, capture the organisation's name.

Owner title

Owner's contact person

Required if the owner is an organisation

Owner email address *

alidonnz@gmail.com

Owner contact number: *

0211521186

Owner mobile number

Owner's street address *

7 Swindon Lane
Amberley

Owner mailing address *

7 Swindon Lane
Amberley

Proof of Ownership

The Building (Forms) Regulations 2004 requires evidence of ownership to be provided, proof of ownership less than 3 months old ensures the ownership is current.

Proof of ownership *

- ◉ Record of Title (RT)
- ○ Other

Click here to request a RT from from Land Information New Zealand.

Request a Record of Title (RT) from the Building Consent Authority (BCA) or Council *

- ○ Yes
- ◉ No

Check with the Building Consent Authority (BCA) before requesting a RT directly from them.

Who Is The Applicant

Is the application being made on behalf of the owner *

- (•) Yes
- ( ) No

Agent Contact Information

Please note that the nominated first point of contact must be in New Zealand.

Who is the first point of contact for further correspondence? *

- ( ) Owner
- (•) Agent
- ( ) Other

Who is the first point of contact for invoicing *

- ( ) Owner
- (•) Agent
- ( ) Other

Who should invoices be made out to? *

Don Campbell

The code compliance certificate should be sent to *

- ( ) Owner - owner address as per section "Who Owns The Building"
- (•) Agent - agent address as per section "Who Is The Applicant"

Agent name *

Totalspan North Canterbury

If the agent is an organisation, capture the organisation's name

Agent title

Agent's Contact person

Stephanie Carter

Required if the agent is an organisation

Agent's relationship to owner *

owner has authorised us to be their agent on this project

Agent email address *

northcanterbury@totalspan.co.nz

Agent contact number *

033100247

Agent mobile number

Agent street address *

127 Main North Road,
Woodend 7610,
New Zealand

Agent mailing address *

P O Box 58,
Woodend 7641,
New Zealand

Who Completed The Building Work

Select who completed the building work *

- [ ] Licensed Building Practitioner
- [x] Other

If there are others who were involved in the build who aren't licensed building practitioners, please provide their details by selecting the other option.

Tradespeople who carried out building work other than restricted building work is/are

Name * Colin Connor

Company Totalspan North Canterbury

Email address * northcanterbury@totalspan.co.nz

Contact number * 033100247

Street address * 127 Main North Road Woodend

Mailing address * P O Box 58 Woodend

Trade * Other

Other builder

Registration number

Insert registration number if applicable i.e. plumber or gasfitter registration number.

Tradespeople who carried out building work other than restricted building work is/are

Name * Spanbild NZ Ltd

Company

Email address * headoffice@spanbild.co.nz

Contact number * 033495700

Street address * 112 Waterloo Road Christchurch

Mailing address * P O Box 11013 Christchurch

Trade * Designer

Other

Registration number

Insert registration number if applicable i.e. plumber or gasfitter registration number.

Tradespeople who carried out building work other than restricted building work is/are

Name * Ryan Moreau

Company Spanbild NZ Ltd

Email address * headoffice@spanbild.co.nz

Contact number * 033495700

Street address *
112 Waterloo Road
Christchurch

Mailing address *
P O Box 11013
Christchurch

Trade *
Engineer

Other

Registration number
CPEng 1013731

Insert registration number if applicable i.e. plumber or gasfitter registration number.

Tradespeople who carried out building work other than restricted building work is/are

Name *
Wayne Service

Company
Hurunui Drainage & Plumbing

Email address *
info@hdpltd.co.nz

Contact number *
03 314 9934

Street address *
239 Lawcocks Road, RD1, Amberley 7481

Mailing address *
P O Box 139 Amberley 7441

Trade *
Other

Other
Drainlayer

Registration number
13504

Insert registration number if applicable i.e. plumber or gasfitter registration number.

What Specified Systems Are In The Building?

Are there any specified systems in the building? *

○ Yes ◉ No

Have You Attached All Required Documents

Document Upload Process

Only one document can be uploaded against each document category. You need to merge all documents into a single PDF per category (e.g. all architectural plans must be merged into a single document).

Several free online PDF merger tools are available on the internet one such tool is Smallpdf. With Smallpdf, you can merge documents into a single file.

For a full list of the document categories and what should be included in each category click **here.**

Click **here** for help and frequently asked questions.

A complete CCC application requires the information listed below (if applicable):

- Memorandum of Licensed Building Practitioners Record of Work (for each type of building work completed)
- Certificates relating to energy work
- Current manufacturer's certificate(s) relating to modular components

Supporting information may also be required including (but is not limited to):

- Evidence that specified systems can perform to the performance standards set out in the building consent
- Other documents from personnel who carried out the work
- Refer to your building consent approval letter for a full list of documents required to support your CCC application.

If you have already uploaded documents to the building consent you do not need to upload it again.

Quick Tip:

If you/your organisation made the building consent application or was added as a collaborator to the building consent, you can view the documents already submitted by:

- Opening the building consent
- Open the documents tab
- The BCA has received documents with a received date.



CCC Documentation can be uploaded through either the Building Consent Form 2 or the CCC Form 6, after the Application has been submitted to the BCA

Select the following option to attach a record of work *

☑ Attached a PDF to this application	☑ The LBP will complete the form online	☐ No records of work are required

Record Of Building Work

Declaration

Privacy Information

The information you have provided on this form is required so that your application can be processed under the Building Act 2004. The Council, Territorial Authority (TA) or Building Consent Authority (BCA) collates statistics relating to building work and has a statutory obligation to provide information to third parties. The information is stored on a public register, which must be supplied to whoever requests the information. Under the Privacy Act 2020, you have the right to see, and correct personal information Councils, TAs and BCAs holds about you.

You can view the Simpli Privacy Statement here

In providing this information, you agree to your details being used for customer surveys carried out by the Council, BCA or TA.

Terms of Use

By making this submission you agree to the Simpli portal terms and conditions.

Your application fees

The Council, BCA or TA may charge fees for your application. These will include statutory levies to BRANZ and the Ministry of Business, Innovation & Employment.

A fee schedule can be found on the BCA's website, refer to the link in the details panel on the right. Your fees will be advised when the BCA accepts your submission.

Statutory declaration

I request that you issue a code compliance certificate for this work under section 95 of the Building Act 2004.

☑ * **I acknowledge and agree with the above statements.**

Name *

Stephanie Carter, Totalspan North Canterbury

Date *

06/08/2025

Submitter Declaration

Submitter Name

Stephanie Carter

Date

06/08/2025

I understand that by ticking the following boxes, I am agreeing to the following statements:

☑ * **As the agent I confirm that I am submitting this application on behalf of and with the authority of the owner and confirm that all the information within the application is, to the best of my knowledge, true and correct.**

☑ * **I request that you issue a code compliance certificate for this work under section 95 of the Building Act 2004.**

RECORD OF TITLE
UNDER LAND TRANSFER ACT 2017
FREEHOLD

Search Copy

R.W. Muir
Registrar-General
of Land

Identifier **CB45C/43**
Land Registration District **Canterbury**
Date Issued 17 December 1998

Prior References
CB40D/403

Estate Fee Simple
Area 1260 square metres more or less
Legal Description Lot 6 Deposited Plan 79189
Registered Owners
Donald Melvern Campbell and Alison Teresa Campbell

Interests

A382983.1 Resolution under Section 321(3)(c) Local Government Act 1974 (DP 79189) - 17.12.1998 at 12.20 pm

A382983.6 Easement Certificate specifying the following easements - 17.12.1998 at 12.20 pm

Type	Servient Tenement	Easement Area	Dominant Tenement	Statutory Restriction
Right of way, right to drain sewage and water, right to convey water, electric power and telephonic communications	Lot 5 Deposited Plan 79189 - CT CB45C/42	A DP 79189	Lot 6 Deposited Plan 79189 - herein	
Right of way, right to drain sewage and water, right to convey water, electric power and telephonic communications	Lot 5 Deposited Plan 79189 - CT CB45C/42	B DP 79189	Lot 6 Deposited Plan 79189 - herein	

The above easements will be subject to Section 243(a) Resource Management Act 1991 when created

A382983.7 Transfer creating the following easement in gross - 17.12.1998 at 12.20 pm

Type	Servient Tenement	Easement Area	Grantee	Statutory Restriction
Convey electric power	Lot 6 Deposited Plan 79189 - herein	E DP 79189	Mainpower New Zealand Limited	

The above easement is subject to Section 243(a) Resource Management Act 1991

Land Covenant in Transfer A419959.1 - 12.8.1999 at 11.32 am

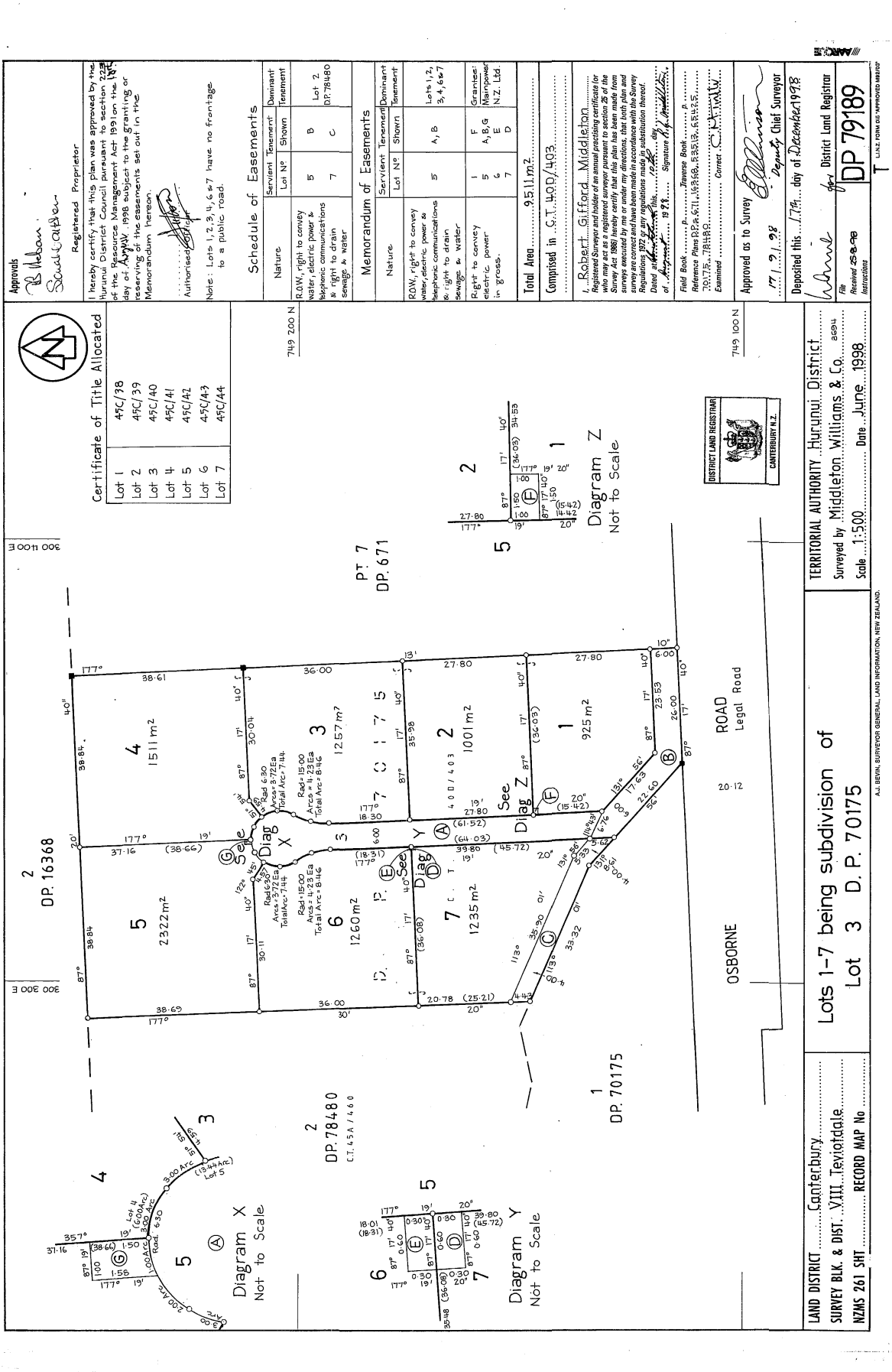
Approvals
Registered Proprietor
Schedule of Easements
Memorandum of Easements
Certificate of Title Allocated
Lot 1 45C/38
Lot 2 45C/39
Lot 3 45C/40
Lot 4 45C/41
Lot 5 45C/42
Lot 6 45C/43
Lot 7 45C/44
Total Area 9511m2
Compiled in C.T. 40D/493
Surveyed by Middleton Williams & Co.
Scale 1:500
Date June 1998
TERRITORIAL AUTHORITY Hurunui District
LAND DISTRICT Canterbury
SURVEY BLK. & DIST. VIII Teviotdale
NZMS 261 SHT RECORD MAP No
Lots 1-7 being subdivision of Lot 3 D. P. 70175
DP 79189
District Land Registrar
Deposited this 17th day of December 1998
Approved as to Survey 17.12.98
Deputy Chief Surveyor
Diagram X Not to Scale
Diagram Y Not to Scale
Diagram Z Not to Scale
PT 7 DP. 671
DP. 16368
DP. 78480
DP. 70175
OSBORNE
ROAD Legal Road
749 200 N
749 100 N
300 400 E
300 300 E
DISTRICT LAND REGISTRAR
CANTERBURY N.Z.

simpli

HURUN209696 - Request For More Information

HURUNUI DISTRICT COUNCIL
P.O. Box 13 | Amberley 7441 | 66 Carters Road | Amberley 7410
Phone: 03 314-8816 | Email: info@hurunui.govt.nz
Web: hurunui.govt.nz | facebook.com/HurunuiDistrictCouncil

CODE COMPLIANCE CERTIFICATE

Form 7, Section 95, Building Act 2004

THE BUILDING	
Street address of building:	7 Swindon Lane, Amberley
Legal description of land where building is located:	LOT 6 DP 79189
Building Name:	
Location of building within site/block number:	
Level/unit number:	0
Current, Lawful established use:	Outbuildings
Year first constructed:	2025

OWNER	
Name of owner:	Donald Melvern Campbell and Alison Teresa Campbell
Contact person:	
Mailing Address:	7 Swindon Lane,Amberley
Street address/registered office:	7 Swindon Lane, Amberley
Contact phone number:	0211521186
Contact alternative phone number:	
Contact email address:	alidonnz@gmail.com
First point of contact for communication with the Council/Building Control Authority (BCA):	
Totalspan North Canterbury	PO Box 58,Woodend 7641 033100247 northcanterbury@totalspan.co.nz

BUILDING WORK	
Building Consent No: 250126	Issued by: Hurunui District Council
Project: Construction of an IL1 steel framed and steel clad Totalspan building on a concrete slab	

CODE COMPLIANCE

The building consent authority named below is satisfied, on reasonable grounds, that –

(a) The building work complies with the building consent

Position: Building Officer - Cadet

Signature: 

On behalf of: Hurunui District Council

Date: 24 November 2025

HURUNUI DISTRICT COUNCIL
P.O. Box 13 | Amberley 7441 | 66 Carters Road | Amberley 7410
Phone: 03 314-8816 | Email: info@hurunui.govt.nz
Web: hurunui.govt.nz | facebook.com/HurunuiDistrictCouncil

To comply with the Global Stormwater Discharge Consent conditions for Hurunui District Council (HDC), an Erosion and Sediment Control Plan (ESC) is required before construction commences.

1. The Erosion and Sediment Control Plan shall meet the requirements of the 'Erosion and Sediment Control Guideline, Environment Canterbury' https://esccanterbury.co.nz/ for construction,
   and 'Water Sensitive Design for Stormwater' (GD004)
   https://content.aucklanddesignmanual.co.nz/regulations/technical-guidance/Documents/GD04%20WSD%20Guide.pdf
   for design and operation.

2. Prior to commencing works authorised by this consent, the consent holder shall submit a Sediment & Erosion Control Plan to the 3 Waters Planning Team. The plan shall include, as a minimum:-

   i. the mechanisms used to ensure that waterborne sediment does not leave the site, during and/or after construction;

   ii. the mechanisms used to control dust;

   iii. the procedures for keeping stormwater systems, adjacent footpaths and roads free of mud, debris and obstructions.

   iv. how parking associated with construction will be managed.

   v. the nature and location of signage to be erected to warn pedestrians of the construction site and associated construction vehicles.

3. Sediment-laden water must not be allowed to leave the site.

4. The best possible means shall be employed to minimise windblown dust, soil and the associated wind erosion.

5. Adequate drainage and silt control must be in place during and following the earthworks, so as to avoid or mitigate any adverse environmental effects.

6. The consent holder shall implement suitable measures to prevent earth being deposited on public roads. In the event that the materials are deposited on the road, the consent holder shall take immediate action at their own expense to remediate the contamination resulting from the construction works. The measures shall remain in place until completion of work.

7. Any damage/sediment build up to the stormwater components (kerb and channel, sumps, Stormwater manholes, soakpits, retention/detention basins etc.), as a result of unapproved construction phase discharge, shall be cleaned/repaired at the consent holder's expense.

8. The Site Manager will ensure that the works are executed in accordance with the approved plans and will continue to supervise and monitor the ESCP works. This will be verified by the HDC Building Officers.

9. All earthworks shall be undertaken in accordance with the provisions of N.Z.S 4431 (only applicable for Resource Consents/Land use consents or BCs where large volume of earthworks is involved).

10. Immediately upon completion of earthworks, all earth worked areas shall be regrassed or planted to ensure the surface is stabilised.

Consent No: **250126**
Applicant: **Totalspan North Canterbury**
Site Address: **7 Swindon Lane, Amberley**
Work Type: **Construction of an IL1 steel framed and steel clad Totalspan building on a concrete slab**

Inspection Type: **Drains**
Inspection Outcome: **Pass**
Inspected By: **Nigel Smith**
Inspection Date: **25 July 2025 10:33 a.m.**
Duration: **45 minutes**

Inspection Element	Status
Site hazard check completed	Pass
Is the inspection within my competency? **Yes the inspection is within my competency**	Pass
General	Pass
Inspection carried out	Pass
Approved plans reviewed ***Yes - Electronic documents checked***	Pass
Warnngs and Bans	Pass
Inspection Photos	Pass
Drainlayer details	Pass
Drainlayer registration number **HDP Wayne Service #13504**	Pass
Sewerage	N/A
Stormwater	Pass
Drain Material **100mm PVC**	Pass
Gradients **>1 in 100**	Pass
Inspection Points	N/A
Bedding Material **13mm chip**	Pass
Cover **>375mm**	Pass
Lateral Connection	N/A
Soak Pit sizes **In to exciting stormwater**	Pass
Soak Pit filter cloth	N/A
Soak Pit Locations	N/A
Gutter Sizes and Overflows	N/A
Downpipe Positions **All sized and located as per plans**	Pass
Deck Drains	N/A
Internal Deck Overflows	N/A
Bubble-up Sumps	N/A
Driveway drainage - all pipework in place	N/A



Fall for stormwater pipe all appears to be OK
Taken at 10:27 AM on Friday 25/07/2025



Good fall on level
Taken at 10:27 AM on Friday 25/07/2025



Storm water front of shed
Taken at 10:27 AM on Friday 25/07/2025



Storm water from house to garage
Taken at 10:28 AM on Friday 25/07/2025



13 mm chip storm water going from garage to house
Taken at 10:28 AM on Friday 25/07/2025



Downpipes in position
Taken at 10:28 AM on Friday 25/07/2025



Downpipes in place as per drawings everything appears to be OK
Taken at 10:28 AM on Friday 25/07/2025

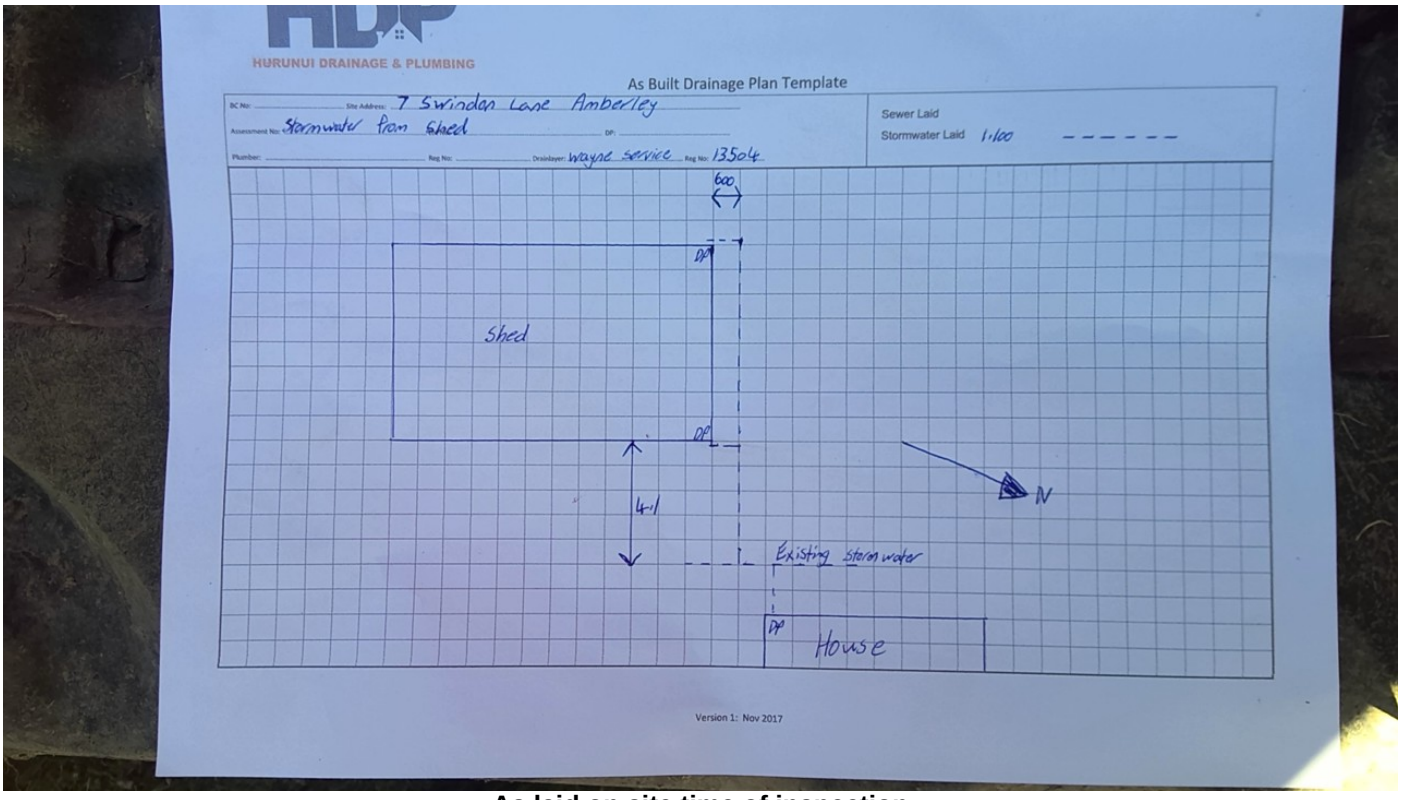

As laid on site time of inspection
Taken at 10:29 AM on Friday 25/07/2025

Consent No: **250126**
Applicant: **Totalspan North Canterbury**
Site Address: **7 Swindon Lane, Amberley**
Work Type: **Construction of an IL1 steel framed and steel clad Totalspan building on a concrete slab**

Inspection Type: **Final - Garages or Farm sheds**
Inspection Outcome: **Pass**
Inspected By: **Nigel Smith**
Inspection Date: **31 July 2025 1:15 p.m.**
Duration: **45 minutes**

Inspection Element	Status
Site hazard check completed	Pass
Is the inspection within my competency? **Yes the inspection is within my competency**	Pass
General	Pass
Inspection carried out	Pass
Approved plans reviewed ***Yes - Electronic documents checked***	Pass
Warnngs and Bans	Pass
Inspection Photos	Pass
Exterior/interior	Pass
FFl above GL **Good - sufficient**	Pass
Exterior cladding **Profiled metal - direct fixed vertically**	Pass
Flashings correct **All as designed**	Pass
Penetrations sealed **YES - silicone sealed**	Pass
Bracing completed **Steel strap cross bracing in place as designed**	Pass
Post fixing **Galv. bolt fixed as designed**	Pass
Truss/rafter fixing **Steel portals as designed** **All fixed as per design**	Pass
Purlin fixing **Steel cleats as per design**	Pass
Bottom plate fixing **12mm galv. bolt fixing**	Pass
DPC to bottom plate	N/A
Fire walls (if required)	N/A
S/W discharge location **From DP'S through sump to lateral**	Pass
S/W sumps/strip drain	N/A
Downpipes clipped **YES - 2 x clips each**	Pass
MV/BV size/location	N/A
Effluent tank/field	N/A
Plans align with consent documents **YES - all work as drawn & designed**	Pass

Exterior photos taken Pass

YES - All relevant photos taken



End wall of garage
Taken at 1:15 PM on Thursday 31/07/2025



Fixings all appear to be good
Taken at 1:16 PM on Thursday 31/07/2025



Wall bracing straps in place
Taken at 1:16 PM on Thursday 31/07/2025



Roof straps in place
Taken at 1:16 PM on Thursday 31/07/2025



Bottom fixings in place
Taken at 1:16 PM on Thursday 31/07/2025



Fixings appear to be OK
Taken at 1:16 PM on Thursday 31/07/2025



Fixings all appear to be in place
Taken at 1:16 PM on Thursday 31/07/2025



Garage door
Taken at 1:17 PM on Thursday 31/07/2025



Flashing above small garage door
Taken at 1:17 PM on Thursday 31/07/2025



Ground clearance looks good
Taken at 1:17 PM on Thursday 31/07/2025



Flashings in place
Taken at 1:17 PM on Thursday 31/07/2025



Iron fixed well
Taken at 1:18 PM on Thursday 31/07/2025



Flashings appear to be OK
Taken at 1:18 PM on Thursday 31/07/2025



Clearance from flashing to ground all OK
Taken at 1:18 PM on Thursday 31/07/2025



Spouting in place
Taken at 1:18 PM on Thursday 31/07/2025



Roof appears to be fixed OK spouting in place snow straps on
Taken at 1:18 PM on Thursday 31/07/2025



Down pipes in place
Taken at 1:19 PM on Thursday 31/07/2025

Consent No: **250126**

Applicant: **Totalspan North Canterbury**

Site Address: **7 Swindon Lane, Amberley**

Work Type: **Construction of an IL1 steel framed and steel clad Totalspan building on a concrete slab**

Inspection Type: **Foundation - Combined concrete footings & slab**

Inspection Outcome: **Pass**

Inspected By: **Sven Rigarlsford**

Inspection Date: **6 June 2025 2:04 p.m.**

Duration: **45 minutes**

Inspection Element	Status
Site hazard check completed	Pass
Is the inspection within my competency?	Pass
Yes the inspection is within my competency	
General	Pass
Inspection carried out	Pass
OK to proceed, ensure trenches remain clean and reinforcing maintains all clearances before & while pouring concrete.	
Approved plans reviewed	Pass
Yes - Electronic documents checked	
Warnngs and Bans	Pass
None	
Concrete production	N/A
Engineering inspections carried out (Required items checked)	N/A
Inspection Photos	Pass
Photos Taken	
Site Factors	Pass
Survey Pegs	Pass
Not sighted - fence lines/site corners used	
Siting certifcate required (Required items checked)	N/A
Boundary Clearances	Pass
Only fence lines available - distances appear OK 1200mm off each Boundary as shown.	
Finished floor level	Pass
Sufficient for sight location.	
Site Stability	Pass
Level site	
Ground Bearing	Pass
Firm, gravelly soil	
Vegetation	Pass
Site striped	
Excavations	Pass
Horizontal Rods	Pass
1 x D16 - as drawn	
Vertical Rods	N/A
Starters/Floor Ties	Pass
At portal leg locations as required.	
Steel Identified	Pass
Seismic 300 E	
Bottom Cover	Pass
>75 & <=100mm	
Side Cover	Pass
>75 & <=100mm	

Lapping **600mm min**	Pass
Tying **Wire tied - OK**	Pass
Depth **min 300mm as drawn**	Pass
Width **min 250mm**	Pass
Formwork **Constructed timber**	Pass
Level Bottom **Yes - OK**	Pass
Stepped Foundations	N/A
Other items	N/A
Waste Ducts	N/A
Steel around blockouts	N/A
Drains under building	N/A
Subfloor ventilation	N/A
Damp Proofing	Pass
DPM **1 Layer Heavy polythene**	Pass
Lapping/Sealing **Lapped & taped**	Pass
Penetrations	N/A
Slab thickness **Nom. 100mm**	Pass
Base Course	Pass
Material **AP40**	Pass
Depth **100 - 300mm**	Pass
Sand Blinding **Yes, Minimum 20mm**	Pass
Compaction **Compaction certificate required**	Pass
Reinforcing	Pass
Mesh size **665 HRC**	Pass
Mesh lapping **1¼ laps**	Pass
Mesh concrete cover **Nom. 30mm**	Pass
Mesh chairs **Not yet in place to be completed before pouring concrete**	Pass
Floor tie lapping	N/A
Floor tie connection	N/A
Supplementary bars	N/A
Equipotential Bonding in place	N/A
Thickenings	N/A
Services	N/A
Other items	N/A
Bottom plate anchors	N/A
Shrinkage control	N/A

Heating	N/A
Insulation	N/A



Slab elevation
Taken at 1:56 PM on Friday 6/06/2025



distance off back fence
Taken at 1:57 PM on Friday 6/06/2025



Distance off side Boundary
Taken at 1:58 PM on Friday 6/06/2025



footing minimum 250mm
Taken at 1:58 PM on Friday 6/06/2025



footing 350mm deep
Taken at 1:58 PM on Friday 6/06/2025



starters at portal leg location
Taken at 1:59 PM on Friday 6/06/2025

Hurunui District Council
66 Carters Road
PO Box 13
Amberley 7441
Phone (03) 314 8816

SITE NOTICE

Consent No: **250126**
Applicant: **Totalspan North Canterbury**
Site Address: **7 Swindon Lane, Amberley**
Work Type: **Construction of an IL1 steel framed and steel clad Totalspan building on a concrete slab**
Building Category: **R1**

Inspection Type: **Foundation - Combined concrete footings & slab**
Inspection Outcome: **Pass**
Inspected By: **Sven Rigarlsford**
Inspection Date: **6 June 2025**

Passed Items

Site hazard check completed	
Is the inspection within my competency?	**Yes the inspection is within my competency**
General	
Inspection carried out	**OK to proceed, ensure trenches remain clean and reinforcing maintains all clearances before & while pouring concrete.**
Approved plans reviewed	**Yes - Electronic documents checked**
Warnngs and Bans	**None**
Inspection Photos	**Photos Taken**
Site Factors	
Survey Pegs	**Not sighted - fence lines/site corners used**
Boundary Clearances	**Only fence lines available - distances appear OK 1200mm off each Boundary as shown.**
Finished floor level	**Sufficient for sight location.**
Site Stability	**Level site**
Ground Bearing	**Firm, gravelly soil**
Vegetation	**Site striped**
Excavations	
Horizontal Rods	**1 x D16 - as drawn**
Starters/Floor Ties	**At portal leg locations as required.**
Steel Identified	**Seismic 300 E**
Bottom Cover	**>75 & <=100mm**
Side Cover	**>75 & <=100mm**
Lapping	**600mm min**
Tying	**Wire tied - OK**
Depth	**min 300mm as drawn**
Width	**min 250mm**
Formwork	**Constructed timber**
Level Bottom	**Yes - OK**
Damp Proofing	

DPM	**1 Layer Heavy polythene**
Lapping/Sealing	**Lapped & taped**
Slab thickness	**Nom. 100mm**
Base Course	
Material	**AP40**
Depth	**100 - 300mm**
Sand Blinding	**Yes, Minimum 20mm**
Compaction	**Compaction certificate required**
Reinforcing	
Mesh size	**665 HRC**
Mesh lapping	**1¼ laps**
Mesh concrete cover	**Nom. 30mm**
Mesh chairs	**Not yet in place to be completed before pouring concrete**



Slab elevation
Taken at 1:56 PM on Friday 6/06/2025



distance off back fence
Taken at 1:57 PM on Friday 6/06/2025



Distance off side Boundary
Taken at 1:58 PM on Friday 6/06/2025



footing minimum 250mm
Taken at 1:58 PM on Friday 6/06/2025



footing 350mm deep
Taken at 1:58 PM on Friday 6/06/2025



starters at portal leg location
Taken at 1:59 PM on Friday 6/06/2025

Hurunui District Council
66 Carters Road
PO Box 13
Amberley 7441
Phone (03) 314 8816

SITE NOTICE

Consent No: **250126**
Applicant: **Totalspan North Canterbury**
Site Address: **7 Swindon Lane, Amberley**
Work Type: **Construction of an IL1 steel framed and steel clad Totalspan building on a concrete slab**
Building Category: **R1**

Inspection Type: **Drains**
Inspection Outcome: **Pass**
Inspected By: **Nigel Smith**
Inspection Date: **25 July 2025**

Passed Items

Site hazard check completed	
Is the inspection within my competency?	**Yes the inspection is within my competency**
General	
Inspection carried out	
Approved plans reviewed	**Yes - Electronic documents checked**
Warnngs and Bans	
Inspection Photos	
Drainlayer details	
Drainlayer registration number	**HDP Wayne Service #13504**
Stormwater	
Drain Material	**100mm PVC**
Gradients	**>1 in 100**
Bedding Material	**13mm chip**
Cover	**>375mm**
Soak Pit sizes	**In to exciting stormwater**
Downpipe Positions	**All sized and located as per plans**



Fall for stormwater pipe all appears to be OK
Taken at 10:27 AM on Friday 25/07/2025



Good fall on level
Taken at 10:27 AM on Friday 25/07/2025



Storm water front of shed
Taken at 10:27 AM on Friday 25/07/2025



Storm water from house to garage
Taken at 10:28 AM on Friday 25/07/2025



13 mm chip storm water going from garage to house
Taken at 10:28 AM on Friday 25/07/2025



Downpipes in position
Taken at 10:28 AM on Friday 25/07/2025



Downpipes in place as per drawings everything appears to be OK
Taken at 10:28 AM on Friday 25/07/2025

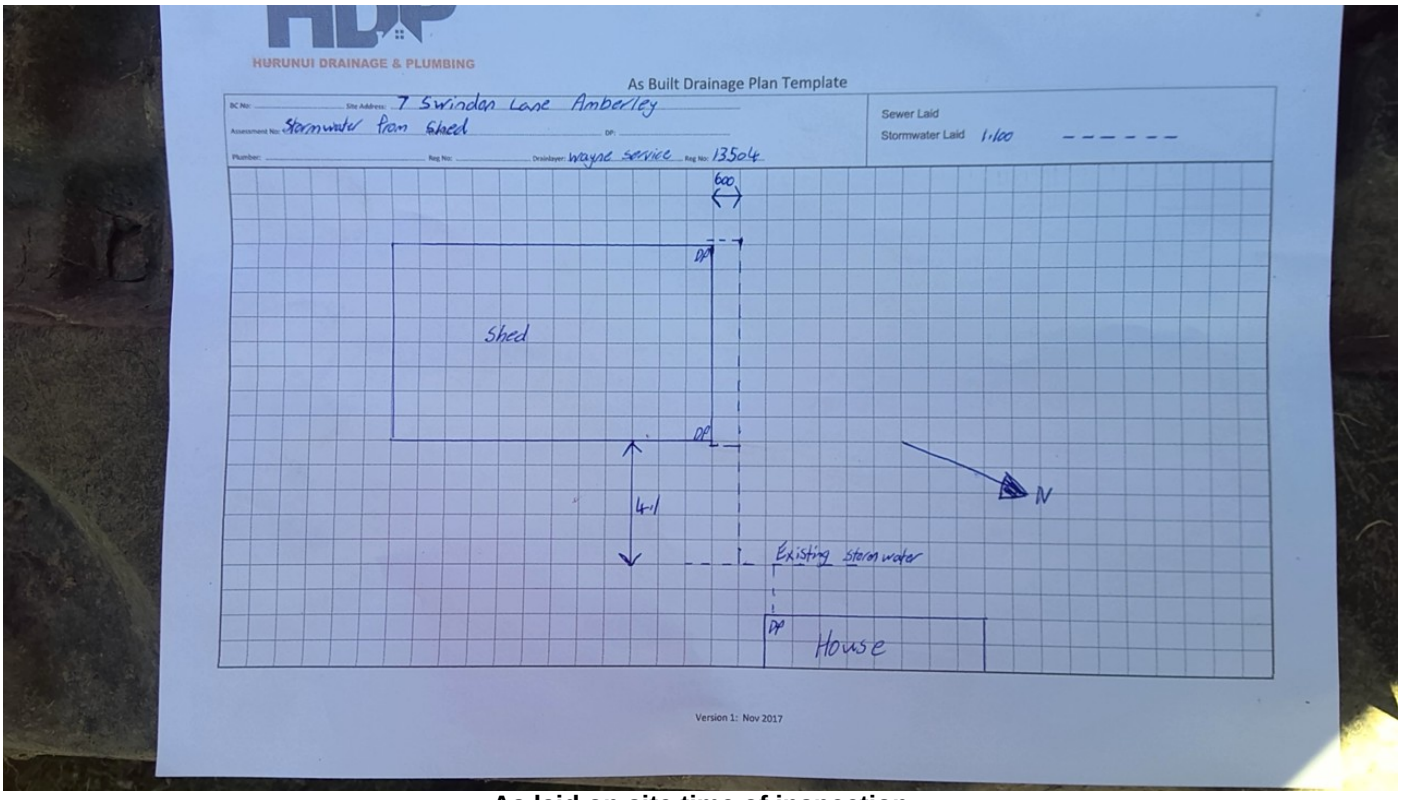

As laid on site time of inspection
Taken at 10:29 AM on Friday 25/07/2025

Hurunui District Council
66 Carters Road
PO Box 13
Amberley 7441
Phone (03) 314 8816

SITE NOTICE

Consent No: **250126**
Applicant: **Totalspan North Canterbury**
Site Address: **7 Swindon Lane, Amberley**
Work Type: **Construction of an IL1 steel framed and steel clad Totalspan building on a concrete slab**
Building Category: **R1**

Inspection Type: **Final - Garages or Farm sheds**
Inspection Outcome: **Pass**
Inspected By: **Nigel Smith**
Inspection Date: **31 July 2025**

Passed Items

Site hazard check completed	
Is the inspection within my competency?	**Yes the inspection is within my competency**
General	
Inspection carried out	
Approved plans reviewed	**Yes - Electronic documents checked**
Warnngs and Bans	
Inspection Photos	
Exterior/interior	
FFl above GL	**Good - sufficient**
Exterior cladding	**Profiled metal - direct fixed vertically**
Flashings correct	**All as designed**
Penetrations sealed	**YES - silicone sealed**
Bracing completed	**Steel strap cross bracing in place as designed**
Post fixing	**Galv. bolt fixed as designed**
Truss/rafter fixing	**Steel portals as designed** **All fixed as per design**
Purlin fixing	**Steel cleats as per design**
Bottom plate fixing	**12mm galv. bolt fixing**
S/W discharge location	**From DP'S through sump to lateral**
Downpipes clipped	**YES - 2 x clips each**
Plans align with consent documents	**YES - all work as drawn & designed**
Exterior photos taken	**YES - All relevant photos taken**

Support Documentation	Status
Application for CCC	Required
As-built drainage plan	Required

PGDE Registration	Status
Drainlayer	Required



End wall of garage
Taken at 1:15 PM on Thursday 31/07/2025



Fixings all appear to be good
Taken at 1:16 PM on Thursday 31/07/2025



Wall bracing straps in place
Taken at 1:16 PM on Thursday 31/07/2025



Roof straps in place
Taken at 1:16 PM on Thursday 31/07/2025



Bottom fixings in place
Taken at 1:16 PM on Thursday 31/07/2025



Fixings appear to be OK
Taken at 1:16 PM on Thursday 31/07/2025



Fixings all appear to be in place
Taken at 1:16 PM on Thursday 31/07/2025



Garage door
Taken at 1:17 PM on Thursday 31/07/2025



Flashing above small garage door
Taken at 1:17 PM on Thursday 31/07/2025



Ground clearance looks good
Taken at 1:17 PM on Thursday 31/07/2025



Flashings in place
Taken at 1:17 PM on Thursday 31/07/2025



Iron fixed well
Taken at 1:18 PM on Thursday 31/07/2025



Flashings appear to be OK
Taken at 1:18 PM on Thursday 31/07/2025



Clearance from flashing to ground all OK
Taken at 1:18 PM on Thursday 31/07/2025



Spouting in place
Taken at 1:18 PM on Thursday 31/07/2025



Roof appears to be fixed OK spouting in place snow straps on
Taken at 1:18 PM on Thursday 31/07/2025



Down pipes in place
Taken at 1:19 PM on Thursday 31/07/2025

HURUNUI District Council

Address: PO Box 13, Amberley
Telephone: (03) 314 8816
Facsimile: (03) 314 9181

Totalspan North Canterbury
PO Box 58
Woodend 7641

Customer No BC250126
Date 19/05/2025
GST Reg No 53-915-477

Tax Invoice 76969

250126 : 7 Swindon Lane, Amberley
Construction of an IL1 steel framed and steel clad Totalspan building on a concrete slab
Owner: Donald Melvern Campbell and Alison Teresa Campbell

Qty	Description	Rate	GST	Amount
	BRANZ levy		0.00	31.00
	Set Fee		91.35	700.35
	Inspections		30.45	233.45
	Planning/PIM Processing		67.95	520.95
	BCA Levy		3.23	24.80

Subtotal	1,317.57
GST	192.98
Total Amount	**$1,510.55**

Council's bank account 03-0802-0946666-00

Totalspan North Canterbury

Customer No BC250126
Date 19/05/2025
Invoice No 76969
Total Due $1,510.55

Water Supply

- Urban Service Connection
- Urban Sub Main
- Manifold

Sewer

- Gravity Main
- Service
- Manhole

Stormwater

- Open Drain

Other

- Parcel
- Hurunui Rating Unit
- Settlement Boundary



7 Swindon Lane, Amberley

Hurunui District Council does not guarantee that the data in this map is without flaw of any kind and disclaims all liability for any errors, loss or other consequences which may arise from relying on any information depicted. Cadastral and topographic data sourced from LINZ. Crown Copyright Reserved.

Date:	23/04/2025
Scale:	1:564
Print Size:	A4 Landscape
Projection:	NZTM
Produced by:	arcservice

N

HURUNUI District Council

HDC Approved Consent Document (In accordance with BA 2004, Sec. 49(1)) - Processed by : Carl Sherwood - BC No. 250126

canterbury maps

Canterbury Maps

Information has been derived from various organisations including Environment Canterbury and the Canterbury Maps partners. Boundary information is derived under licence from LINZ Digital Cadastral Database (Crown Copyright Reserved). Environment Canterbury and the Canterbury Maps partners do not give and expressly disclaim any warranty as to the accuracy or completeness of the information or its fitness for any purpose.

Information from this map may not be used for the purposes of any legal disputes. The user should independently verify the accuracy of any information before taking any action in reliance upon it.

N

0 0 0 0 0 Kilometres

Scale: 1:100 @A3

Map Created by Canterbury Maps on 15/04/2025 at 1:55 PM



HDC Approved Consent Document (In accordance with BA 2004, Sec. 49(1)) - Processed by : Carl Sherwood - BC No. 250126

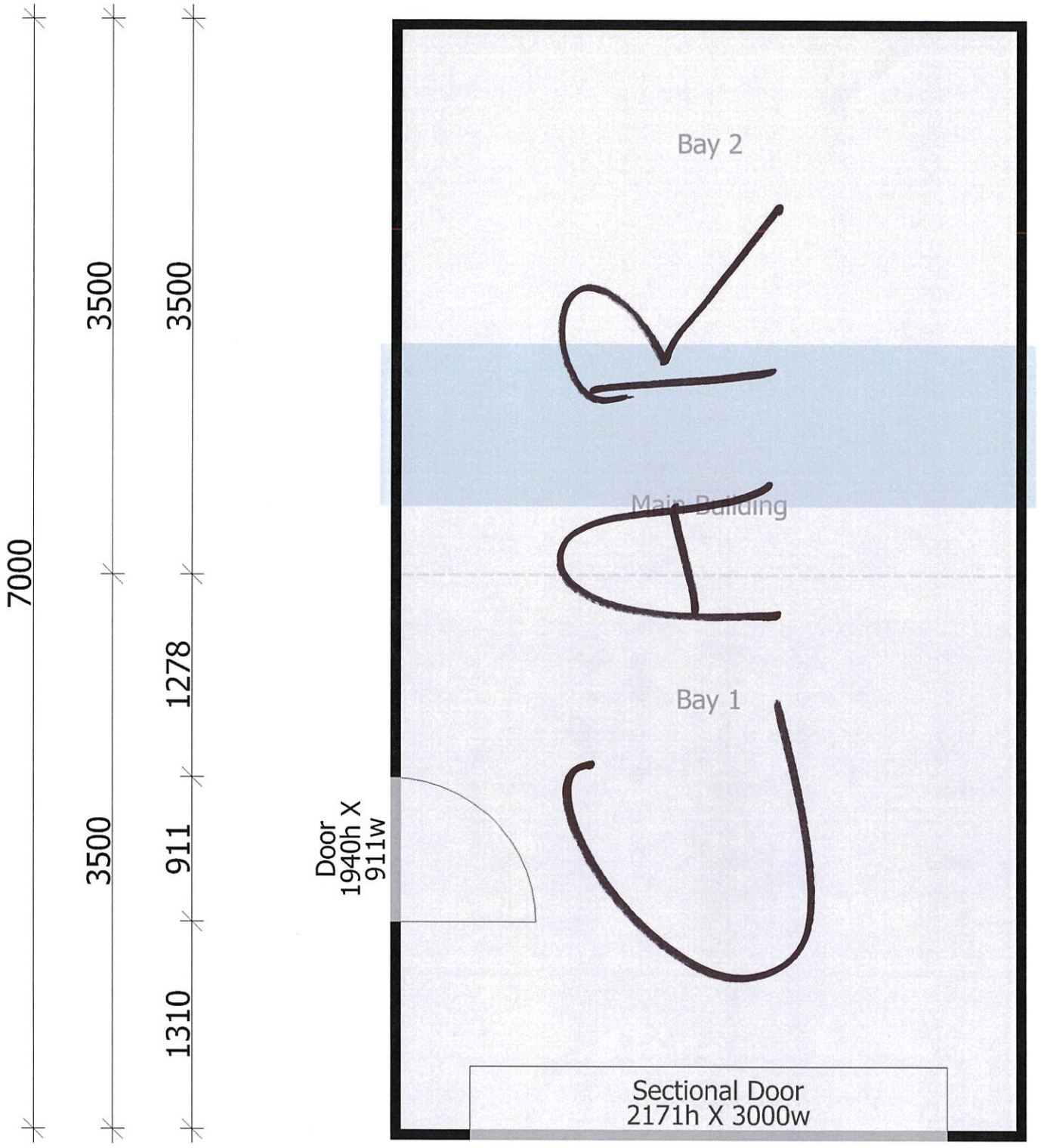

REVISED During Processing 16/05/2025

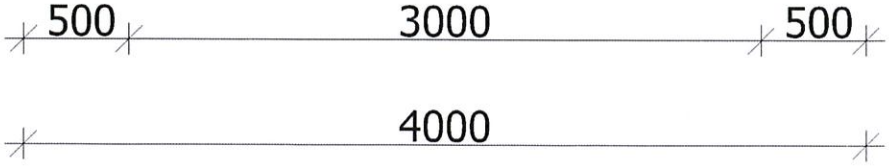

* All Dimensions in mm. Colours shown are examples only. For exact colour samples see your local Totalspan North Canterbury representative.
'NOTE' Drawings are not construction issue. Shop drawings (For Construction) will be detailed prior to fabrication.

Petersen Construction Ltd
127 Main North Road, , Woodend, 7641, New Zealand
Phone: 033100247
Email: northcanterbury@totalspan.co.nz

For:
Don Campbell
7 Swindon Lane

Amberley,
7410

Gable Range
Project Number: JH.309

11 Apr 2025

HDC Approved Consent Document (In accordance with BA 2004, Sec. 49(1)) - Processed by : Carl Sherwood - BC No. 250126

Notes,

1. FFL to be a minimum of 100mm above highest point of cleared ground.

2. Saw cuts in red.

3. Refer to engineers PS1 for all slab construction details.

CONTRACTOR TO VARIFY ALL DIMENSIONS PRIOR TO STARTING. ALL DIMENSIONS MM UNLESS STATED.

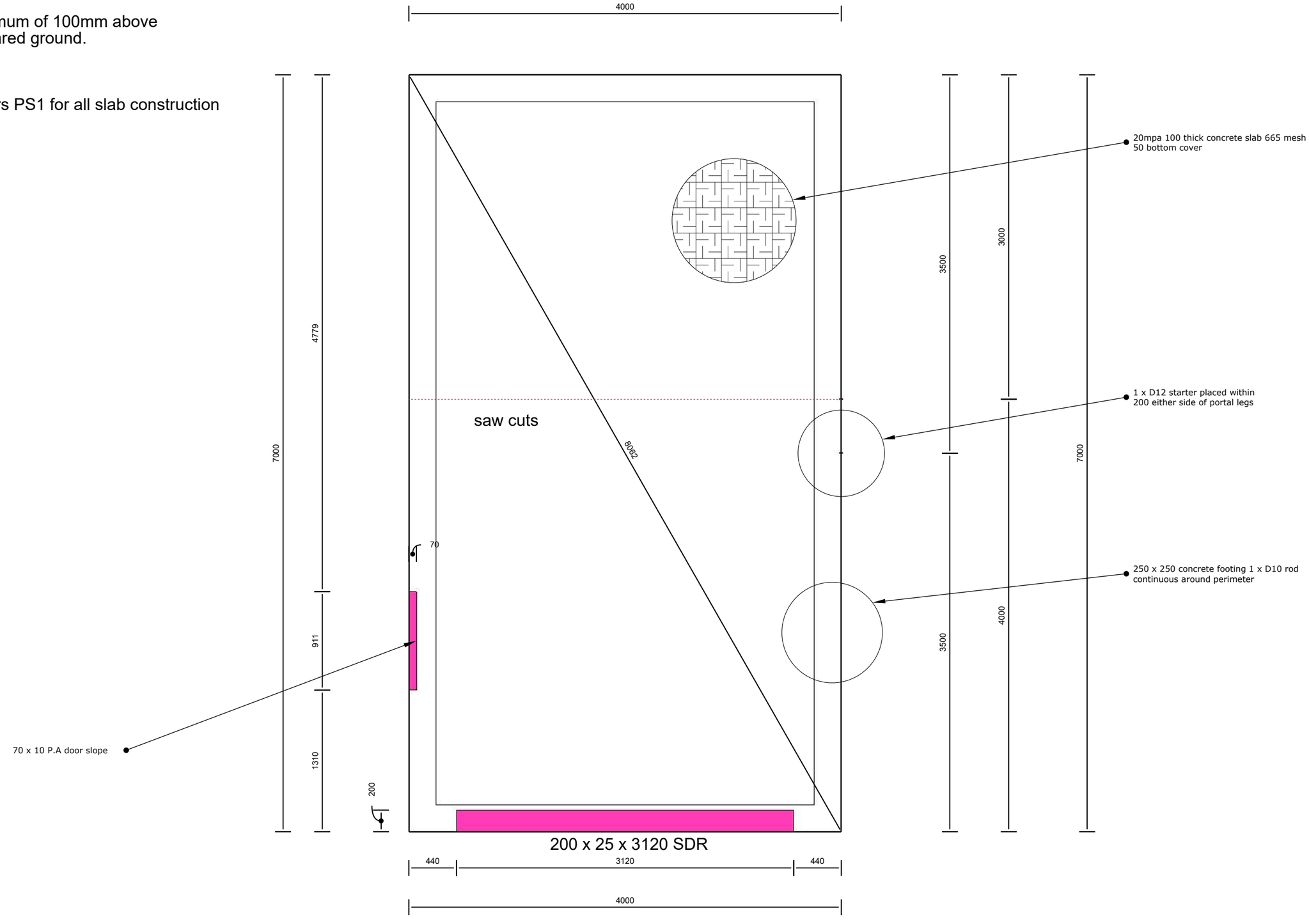

TOTALSPAN
STEEL BUILDINGS
WHO CAN? TOTALSPAN!

BUILDING PROPOSED FOR:

Don Campbell
7 Swindon Lane
Amberley, 7410

DRAWING TITLE:

Slab Plan

DRAWN: JWP

SCALE: NTS

DATE: 15/4/2025

HDC Approved Consent Document (In accordance with BA 2004, Sec. 49(1)) - Processed by : Carl Sherwood - BC No. 250126

TOTALSPAN®
STEEL BUILDINGS
WHO CAN? TOTALSPAN!

Gable Range
Producer Statement and Structural Details
(IL1 Non-Habitable, Unlined)

INDEX:

1	Contents
2	Producer Statement
3	Specifications
4	Durability Statement
5	Site Plan
6-11	Engineering Tables
12	Foundation Details SD-F01
13	Foundation Details SD-F02
14	Frame Details SD-P01
15	Major Openings SD-M01
16	Minor Door Openings SD-M05
17	Bracing Details
18	Flashing Details
19	Flashing Detail SD-E01

CLIENT:

Don Campbell
7 Swindon Lane
Amberley
CAN
7410

BUILDING:

System Ref Code:	JH.309 (v3.3.2.15)
Location:	Lat: -43.146309 Lng: 172.730994
Wind Speed: Vdes Θ:	34.22 m/s
Snow Loading:	Sg = 0.9 kPa
Span:	4.000m
Length:	7.000m
Knee Height:	2.400m
Bay Size:	2x3.500m
Roof Pitch:	15°
Roofing Sheet:	7-Rib 0.35mm
Cladding Sheet:	7-Rib 0.35mm
Downpipe Type:	80mm Coloursteel
Floor Type:	Concrete Slab
Area:	Total 28.0m²

NOTES :

1 - Contractor to confirm all dimensions on site at time of construction
2 - These drawings must not be reproduced without express permission from Spanbild New Zealand Limited.

TOTALSPAN
A Division of Spanbild New Zealand Ltd
112 Waterloo Road, Hornby
P.O.Box 11-013, Christchurch Details

SPANBILD
DESIGN. MANUFACTURE. BUILD.

HDC Approved Consent Document (In accordance with BA 2004, Sec. 49(1)) - Processed by : Carl Sherwood - BC No. 250126

PRODUCER STATEMENT – PS1
DESIGN

BUILDING CODE CLAUSE(S): B1 **JOB NUMBER:** JH.309
ISSUED BY: Spanbild NZ Ltd
(Engineering Design Firm)
TO: Totalspan North Canterbury
(Owner/Developer)
TO BE SUPPLIED TO: Hurunui District Council
(Building Consent Authority)
IN RESPECT OF: 4.000m span x 7.000m length; IL1 portal building; DL=50yrs
(Description of Building Work)
AT: 7 Swindon Lane, Amberley, 7410, CAN
(Address, Town/City)
LEGAL DESCRIPTION: **N/A**

We have been engaged by the owner/developer referred to above to provide *(Extent of Engagement)*:
Structural Design as shown on sheets 1, 2, 5-16
in respect of the requirements of the Clause(s) of the Building Code specified above for all, as specified in the Schedule, of the proposed building work.

The design carried out by us has been prepared in accordance with:

- ✔Compliance documents issued by the Ministry of Business, Innovation & Employment *(Verification method/acceptable solution)* B1/VM1, B1/VM4 and/or;
- Alternative solution as per the attached Schedule.

The proposed building work covered by this producer statement is described on the drawings specified in the Schedule, together with the specification, and other documents set out in the Schedule.

On behalf of the Engineering Design Firm, and subject to:

- Site verification of the following design assumptions:
- All proprietary products meeting their performance specification requirements;

I believe on reasonable grounds that:

- the building, if constructed in accordance with the drawings, specifications, and other documents provided or listed in the Schedule, will comply with the relevant provisions of the Building Code and that;
- the persons who have undertaken the design have the necessary competency to do so.

~~I recommend the **N/A** level of **construction monitoring.**~~

I, *(Name of Engineering Design Professional)* Ryan Moreau , am:

- ✔CPEng number 1013731

and hold the following qualifications BE(Hon), CPEng, CMEngNZ

The Engineering Design Firm holds a current policy of Professional Indemnity Insurance no less than $200,000
The Engineering Design Firm is a member of ACE New Zealand.

SIGNED BY *(Name of Engineering Design Professional)*: Ryan Moreau

ON BEHALF OF *(Engineering Design Firm)*: Spanbild NZ Ltd Date:14-04-2025

Note: This statement has been prepared solely for the Building Consent Authority named above and shall not be relied upon by any other person or entity. Any liability in relation to this statement accrues to the Engineering Design Firm only. As a condition of reliance on this statement, the Building Consent Authority accepts that the total maximum amount of liability of any kind arising from this statement and all other statements provided to the Building Consent Authority in relation to this building work, whether in tort or otherwise, is limited to the sum of $200,000.

This form is to accompany **Form 2 of the Building (Forms) Regulations 2004** for the application of a Building Consent.

SCHEDULE TO PS1

The proposed building work covered by this producer statement is described on the drawings with project reference and sheet numbers on the PS1

The specifications, durability statement and maintenance requirements are set out in the drawings.

Alternative Solutions apply for areas that the potential for liquefaction or lateral spread has been identified as it is outside B1/VM4. The alternative solutions are MBIE guidance documents "Planning and engineering guidance for potentially liquefaction prone land" and "Repairing and re-building houses affected by the Canterbury Earthquakes"

The foundations require suitable soils. This IL1 foundation (generally unlined) has been designed for;

- Geotechnical Ultimate Bearing Capacity of 225 kPa,
- Where there is no potential for liquefaction or lateral spread or
- Liquefaction Vulnerability where liquefaction damage is unlikely (very low or low liquefaction vulnerability),
- Non-expansive soils.

- Indications of local instability,
- Foundations closer than 3 x height of a bank plus 0.6 m measured from the foot of the bank, and the length of the flat at the base of the bank is a minimum of 4 times the height of the bank,
- Slope steeper than 5 degrees away from the building platform.
- Buried organic topsoil, peat, soft clays, buried services or expansive clays, any fill that does not have a certificate of suitability issued in accordance with NZS 4431

TOTALSPAN®
STEEL BUILDINGS

Project Ref: JH.309

© Copyright 2017 Spanbild NZ Ltd. All rights reserved.

Don Campbell
7 Swindon Lane
Amberley
7410
021 1521186

Gable Range - Design

Producer Statement

HDC Approved Consent Document (In accordance with BA 2004, Sec. 49(1)) - Processed by : Carl Sherwood - BC No. 250126

SPECIFICATIONS

GENERAL NOTES

1. IMPORTANT DESIGN LIMITATIONS

1.1. Design limitations apply to any item or alteration not specifically stated or clearly represented within the scope of these engineering specifications. This is a CAD drawing which must not be altered by manual methods, exceptions to this are:

1.1.1. The documentation clearly states where "generic" items can be crossed out, or the applicable detail circled to provide clarity.

1.1.2. Additional specific design has been carried out by a CPENG engineer with a PS1 supplied covering "part" design works for any ammedment/alterations. Alternative/Additional drawings shall be supplied or these specifications must be clearly marked up in red pen and accompanied by the PS1 engineer's signature on each drawing altered which is covered by the additional specific design, as above.

1.1.3. A letter has been supplied in writing, signed by the original engineer(s) covering "minor" ammedments/alterations or clarifications to varying interpretations of the design drawings.

1.2. Habitable/Lined Buildings are not covered within this scope of work.

2. GENERAL

2.1. All work shall conform to the New Zealand Building Code

2.2. B2 Durability shall be covered by respective product/manufacturers durability statements

3. LOADINGS

3.1. Buildings are designed to AS/NZS 1170

3.1.1. Refer Schedule for Windspeed, Vdesθ in m/s.

3.1.2. Refer Schedule for Ground Snow Load if applicable in kPa.

3.1.3. The roofing is not designed for point loads of 1.1kN, these are Surfaces (including transparent surface) over which supports (e.g., boards or ladders) are required to be laid to support actions incidental to maintenance (e.g., people).

3.1.4. Earthquake loads, except for "near fault" locations due to the light-weight structure are not critical for unlined, Importance Level 1 & 2 standard structures with cladding as specified below only.

3.1.5. Habitable/Lined or Importance Level 3 and greater structures require specific design engineering in addition to this specification covering the scope of works. (Importance Level 2 structures have been designed to resist "structural damage" deflections only).

3.1.6. Any loads exceeding the above shall require specific design engineering in addition to this specification covering the scope of works.

4. FOUNDATIONS

4.1. Ground shall have a safe bearing capacity of at least 75kPa (225kPa Ultimate).

4.1.1. This is achieved by meeting "good ground", safe bearing capacity of at least 100kPa in accordance with NZS 3604 (i.e. exceeds the above) OR;

4.1.2. Safe bearing capacity of at least 75kPa by Site Specific Geo-Technical Report (as NZS 3604 has no means of determining a minimum safe bearing of 75kPa).

5. CONCRETE

5.1. Designed to NZS 3101

5.2. Remove vegetation and loose material from the building footprint, backfill with compacted hard-fill if required and lay sand blinding to the underside of the concrete slab. Ensure the surface of the slab will be at least 100mm above the highest level of cleared ground around the slab.

5.3. Concrete shall have a maximum aggregate size of 20mm and minimum 20MPa compression strength at 28 days.

5.4. Refer Foundation Details for further details.

5.5. Lesser Ductile Mesh is allowed to be used for Importance Level 1 structures only

5.5.1. Refer NZS 3101 Clause 5.3.2.7 (a)

6. STEELWORK & COMPONENTS

6.1. Boxed Sections

6.1.1. Shall be fixed through flange centres within 100mm from the end and at @ 600mm centres max. (+50mm tolerance) using #10 Self-Drilling Screws. Excludes exterior flanges of Girts & Purlins (as cladding teks provide fastening).

6.2. All Steelwork & Components shall (where applicable) conform to:

6.2.1. AS/NZS 4600 - Cold-formed steel structures

6.2.2. AS/NZS 1252 - High strength steel bolts with associated nuts and ...

6.2.3. AS/NZS 1365 - Tolerances for flat-rolled steel products

6.2.4. AS/NZS 4505:2013 - Garage doors and other large access doors

6.2.5. AS 1110 - ISO metric hexagon bolts and screws

6.2.6. AS 1112 - ISO metric hexagon nuts...

6.2.7. AS 1397 - Continuous hot-dip metallic coated steel sheet and strip

6.2.8. AS 1580 - Paints and related materials - Methods of test

6.2.9. AS 3566 - Self-drilling screws for the building and construction industries

6.2.10. AS 4291.1 - Mechanical properties of fasteners made of carbon steel and ...

6.2.11. IFI-114(Imperial) / IFI-505(Metric) - Break Mandrel Blind Rivets

7. CLADDING

7.1. Roof and Wall Sheeting shall be 0.35 - 0.55 B.M.T, AZ150 Coating, G550 Steel only. Alternative claddings (excluding glass reinforced panel), require an independent specific design certificate for the scope of work.

7.2. Fixing pattern as per E2/AS1 or NZ MRM - NZ Metal Roof and Wall Cladding Code of Practice.

7.3. Flashings shall be fixed as per manufacturers recommendations/instructions.

8. SERVICES

8.1. Penetrations through framing members

8.1.1. Typical hole diameter(s) shall not exceed 29mm (1 ⅛ inch)

8.1.1.1. A single 44mm (1 ¾ inch) hole per C150, C250 or C300 section only is allowed to accommodate an up to 40mm waste water pipe

8.1.2. Distance between holes along the section shall be no less than 1000mm

8.1.3. Holes shall be located:

8.1.3.1. Central in the web, (within the centre 1/3 of the web depth)

8.1.3.2. At least 200mm from the end of a member

8.1.4. Rubber grommets to be applied to un-swaged service holes

8.1.5. Larger and more frequently spaced holes are allowed, however please consult with an engineer first for written approval to ensure compliance with AS/NZS 4600.

TOTALSPAN®
STEEL BUILDINGS

Project Ref: JH.309

© Copyright 2017 Spanbild NZ Ltd. All rights reserved.

Don Campbell
7 Swindon Lane
Amberley
7410
021 1521186

Gable Range - Design

Specifications

HDC Approved Consent Document (In accordance with BA 2004, Sec. 49(1)) - Processed by : Carl Sherwood - BC No. 250126

MANUFACTURERS STATEMENT - DURABILITY

Cladding

To satisfy the requirements of Clause B2:"Durability" of the NZBC and to ensure the cladding material meets a 15-year durability life and a 50 year intended working life (design life), the following requirements must be followed:

Cladding Range of Product and Use

- Coating Type: Zinc/Aluminium & Painted (Coloured Steel).
- Steel thickness range: 0.35mm - 0.55mm BMT
- Steel grade range: G300 - G550
- Application: Standard Totalspan Roof and Wall Cladding
- Profile: Totalspan 7 Rib, Totalspan 6 Rib, Totalspan Corrugate

Requirements

- Fixing and installation of the cladding must be done exactly in accordance with the manufacturer's instructions and specifications.
- Normal maintenance must be regularly carried out on the exterior surface of the cladding and visible internal surfaces of the cladding.The following guide must be followed to ensure the durability requirements are met.

Normal Maintenance

- Normal Maintenance to be completed in accordance with Durability - Acceptable Solution B2/AS 2.1.3
- Corrosion Zones C1 and C2 (Reference SNZ TS 3404:2018, Durability requirements for steel structures and components, corrosivity zone maps, Figure 1 – 7, page 10 – 16)

  Rain-washing only required on exposed (open to airborne salts and rain wetting) material. Sheltered (open to airborne salts, but not rain washed) or protected areas such as under spouting, top-cladding sheets and tops of doors and underside of Awnings and Garaports require washing every 3 months.

- Corrosion Zones C3 and C4 (Reference SNZ TS 3404:2018, Durability requirements for steel structures and components, corrosivity zone maps, Figure 1 – 7, page 10 – 16)

  Rain-washing only required on exposed (open to airborne salts and rain wetting) areas. Sheltered (open to airborne salts, but not rain washed) and protected areas such as under spouting, top cladding and tops of doors and underside of Awnings and Garaports require washing down every month and whenever corrosive salts are present.

Extended Maintenance, Painting or Repainting

Extended Durability

Once the metallic coating or the paint system has weathered away, signs of red rust for bare material or signs of the metallic coating for painted material, painting of the entire surface is required to extend the life of the cladding product. Paint manufacturers recommendations are to be followed for surface preparation and paint type to be used.

Evident Corrosion

- Areas that show signs of white or red rust/corrosion (typically in unwashed areas) require cleaning back with a stiff brush and cleaner to remove all dust, surface contaminants and corrosion products and present a sound substrate for painting. Priming of the surface and application of two coats of paint as per the Paint Manufacturer's recommendations is then required.
- Particular attention needs to be paid to laps (side, end, flashing etc) where earlier corrosion may start due to moisture and dirt entrapment.

  If evident corrosion is not treated quickly rapid deterioration of the sheet may occur which could result in perforation. At this stage replacement of the affected sheet is the best option.

Steel Framing

To satisfy the requirements of Clause B2:"Durability" of the NZBC and to ensure the structural framing material meets a 25-year durability for carports and a 50-year durability for all other buildings, the following requirements must be followed:

Steęl Framing Range of Product and Use

- Coating Type: Galvanised
- Steel thickness range: 0.55mm – 3.0mm BMT
- Steel grade range: G300 – G550
- Application: Standard Totalspan Purlins, Girts, Portal Frames, Door Jambs, Wall Uprights, Bridging, Posts

Profile:
C Sections – C80 to C300
Z Sections – 100x53, 150x65
Tophat Sections – 100x163, 120x170, 150x183
Square Hollow Sections - 65x65, 75x75

Requirements

- Regular inspections of the steel work and maintenance at the first signs of a problem will extend the durability of the sections.
  Where sections are exposed (open to airborne salts and rain wetting) or sheltered (open to airborne salts but not rain washed), or located in salt marine, corrosive industrial or unusually high corrosive enviromentsthe below Normal Maintenance must be adhered to. Please contact your local Totalspan branch for specialist advice if unsure requirements.
  This also applies to all Steelwork that is exposed to the wind but is protected from the rain located in an open sided structure such as carports, awnings or structures closed in on one side only.
  Maintenance is necessary when the Galvanised coating ceases to provide sacrificial protection to the steel base, or where the appearance is no longer aesthetically acceptable. At the first sign of corrosion or rust staining, the surface should be treated and painted with an appropriate coating system. All maintenance should be carried out in accordance with AS/NZS 2312:2002 (Incorporating Amendment No. 1) [c] and New Zealand Steelwork Corrosion Coatings Guide (HERA Report R4-133) [d].

Normal Maintenance

- Normal Maintenance to be completed in accordance with Durability - Acceptable Solution B2/AS 2.1.3

-Corrosion Zones C1 and C2 (Reference SNZ TS 3404:2018, Durability requirements for steel structures and components, corrosivity zone maps, Figure 1 – 7, page 10 – 16)

Rain-washing only required on exposed (open to airborne salts and rain wetting) sections.
Sheltered (open to airborne salts, but not rain washed) sections require washing every 3 months. All other materials should be inspected at the time of washing and if required, cleaned of any contaminants.

-Corrosion Zones C3 and C4 (Reference SNZ TS 3404:2018, Durability requirements for steel structures and components, corrosivity zone maps, Figure 1 – 7, page 10 – 16)

Rain-washing only required on exposed (open to airborne salts and rain wetting) sections
Sheltered (open to airborne salts, but not rain washed) sections require washing down every month and whenever corrosive salts are present. All other materials should be inspected at the time of washing and if required, cleaned of any contaminants.

Manufacturer:

Spanbild New Zealand Limited
112 Waterloo Rd
Sockburn
CHRISTCHURCH

TOTALSPAN®
STEEL BUILDINGS

Project Ref: JH.309

© Copyright 2017 Spanbild NZ Ltd. All rights reserved.

Don Campbell
7 Swindon Lane
Amberley
7410
021 1521186

Gable Range

Durability Statement

HDC Approved Consent Document (In accordance with BA 2004, Sec. 49(1)) - Processed by : Carl Sherwood - BC No. 250126

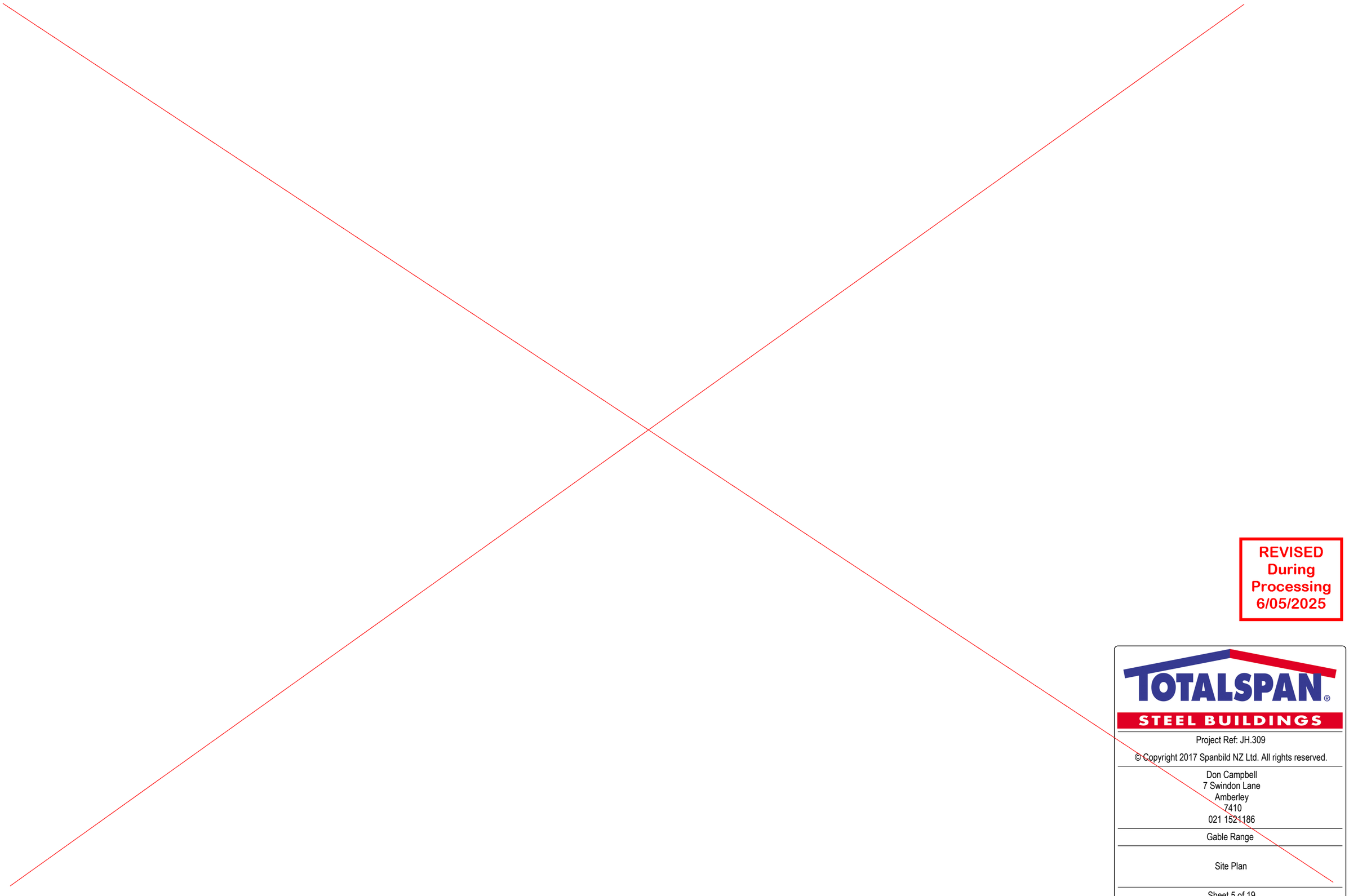

REVISED
During
Processing
6/05/2025

TOTALSPAN®
STEEL BUILDINGS

Project Ref: JH.309

© Copyright 2017 Spanbild NZ Ltd. All rights reserved.

Don Campbell
7 Swindon Lane
Amberley
7410
021 1521186

Gable Range

Site Plan

HDC Approved Consent Document (In accordance with BA 2004, Sec. 49(1)) - Processed by : Carl Sherwood - BC No. 250126

ROOF - (BAYS 2-1)

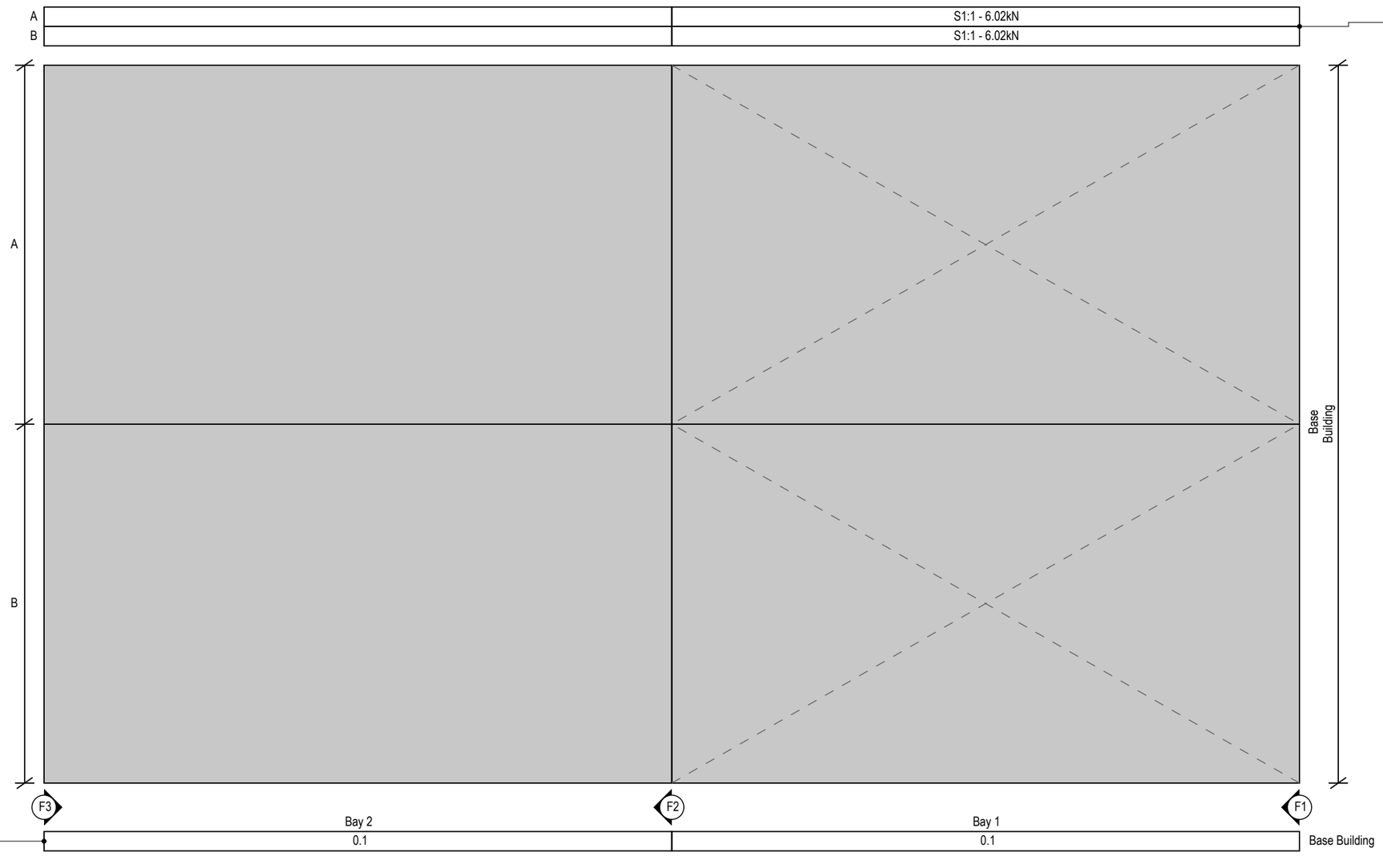

BRACING kN (Totals)		
Location	Required	Achieved
A	0.93 kN	6.02 kN
B	0.93 kN	6.02 kN

BRACING DESIGN NOTES

All bracing must be connected to main structural members i.e. Portal Legs, Portal Rafters, End Wall, Uprights & Main Access Door Jambs. Bracing shall not be solely connected to intermediate members such as Girts, Purlins, Minor Access Door Jambs & PA Door Jambs.

BRACING LEGENDS

S1:1

Mitek Strip-Brace 27x0.6mm G550, configured as a single cross.

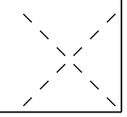

FRAMING SECTION TABLES	
Base Building - 0.1	
Design	Closed
Purlin (Bridge Count)	C100-10(1)
Purlin Centres	0.976m

VIEWS

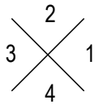

TOTALSPAN® STEEL BUILDINGS

Project Ref: JH.309

© Copyright 2017 Spanbild NZ Ltd. All rights reserved.

Don Campbell
7 Swindon Lane
Amberley
7410
021 1521186

Gable Range - Design

Engineering Tables

HDC Approved Consent Document (In accordance with BA 2004, Sec. 49(1)) - Processed by : Carl Sherwood - BC No. 250126

VIEW 2 - BUILDING SIDE (BAYS 1-2)

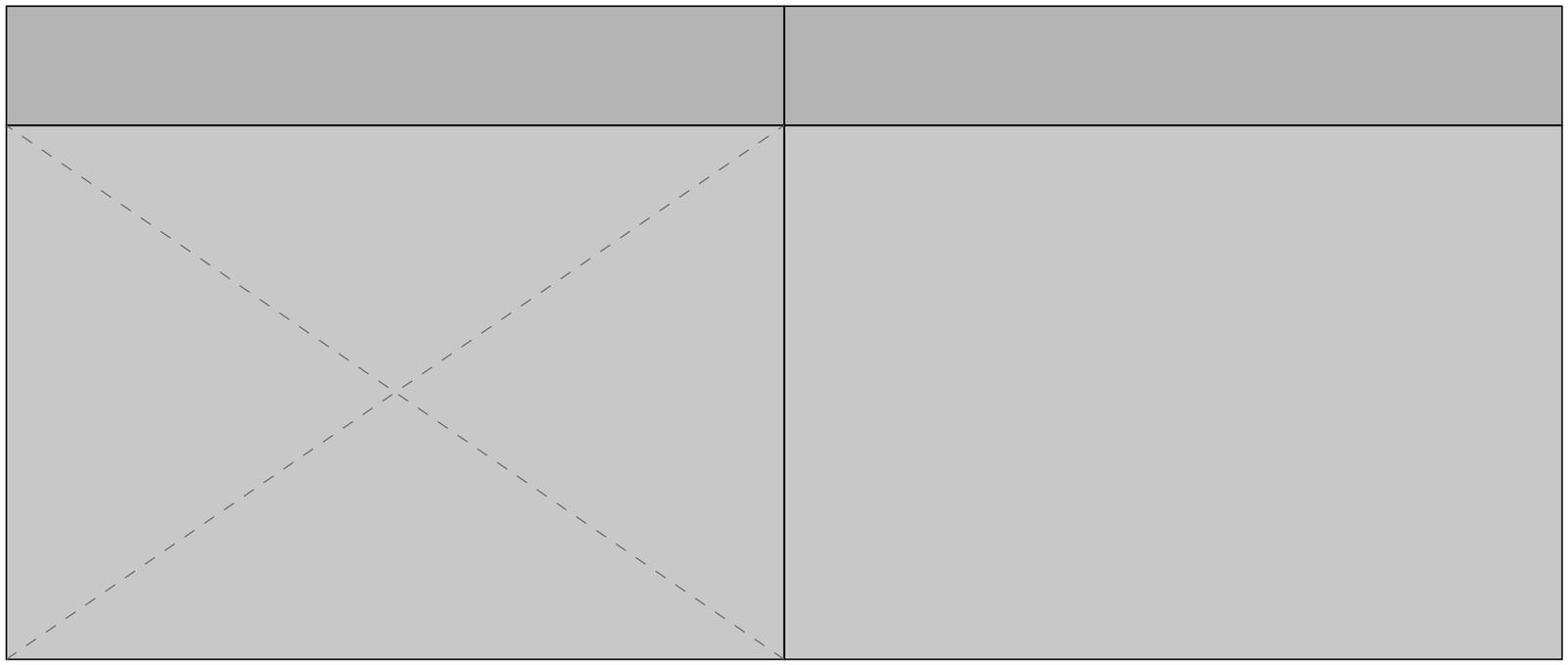

FRAMING SECTION TABLES	
Base Building - 2.1	
Design	Closed
Girt (Bridge Count)	C80-95(1)
Girt Centres	1.140m

	Bay 1	Bay 2
	2.1	2.1
	S1:1 - 5.77kN	

BRACING kN (Totals)	
Required	1.77 kN
Achieved	5.77 kN

VIEWS
2
3 1
4

TOTALSPAN® STEEL BUILDINGS

Project Ref: JH.309

© Copyright 2017 Spanbild NZ Ltd. All rights reserved.

Don Campbell
7 Swindon Lane
Amberley
7410
021 1521186

Gable Range - Design

Engineering Tables

HDC Approved Consent Document (In accordance with BA 2004, Sec. 49(1)) - Processed by : Carl Sherwood - BC No. 250126

VIEW 4 - BUILDING SIDE (BAYS 2-1)

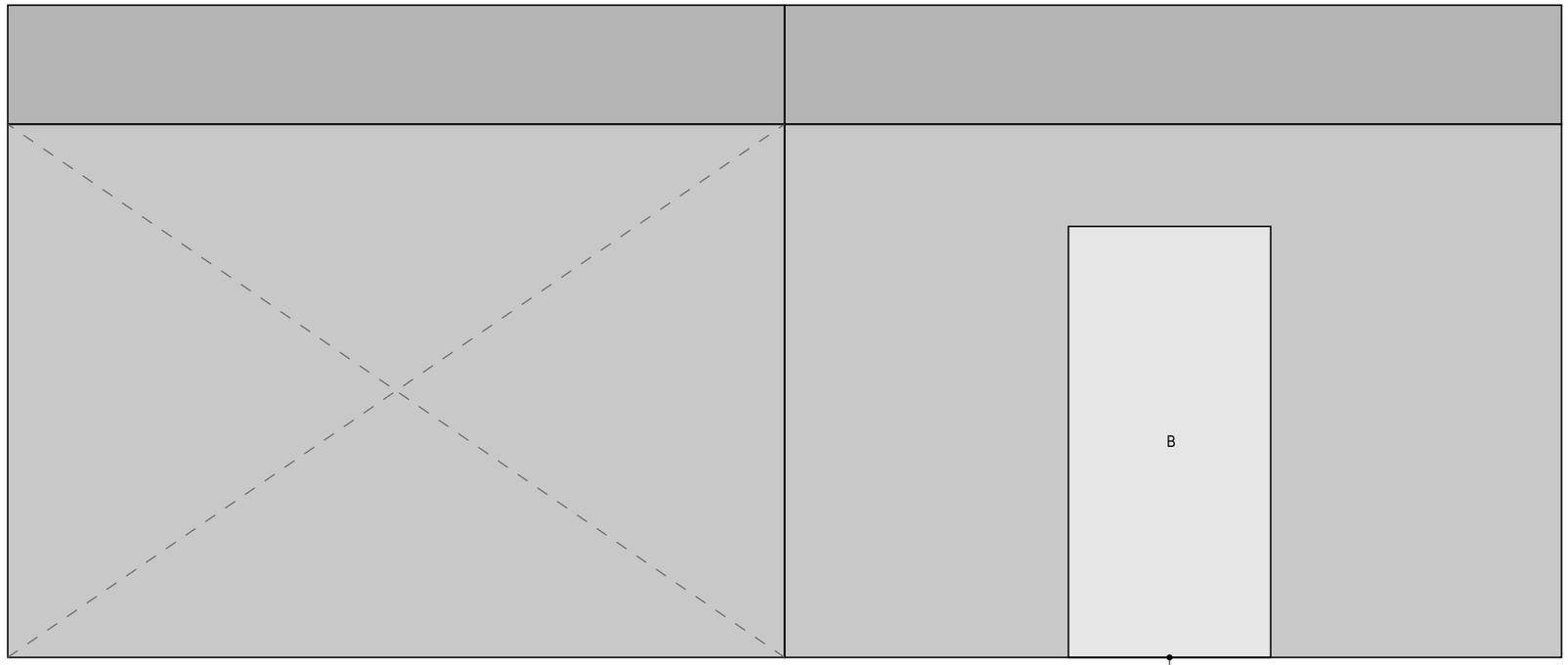

FRAMING SECTION TABLES	
Base Building - 4.1	
Design	Closed
Girt (Bridge Count)	C80-95(1)
Girt Centres	1.140m

OPENING SECTION TABLES	
Opening - B	
Jambs & Head Beam	C80-95

BRACING kN (Totals)	
Required	1.77 kN
Achieved	5.77 kN

VIEWS
2
3 1
4

TOTALSPAN® STEEL BUILDINGS

Project Ref: JH.309

© Copyright 2017 Spanbild NZ Ltd. All rights reserved.

Don Campbell
7 Swindon Lane
Amberley
7410
021 1521186

Gable Range - Design

Engineering Tables

HDC Approved Consent Document (In accordance with BA 2004, Sec. 49(1)) - Processed by : Carl Sherwood - BC No. 250126

FRAME F1

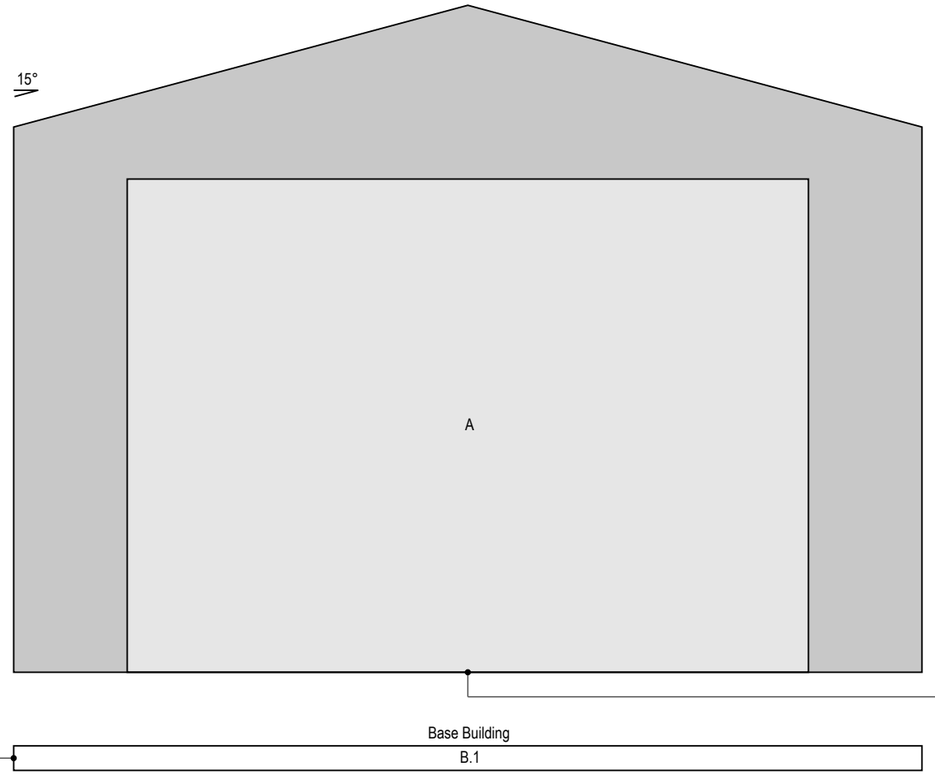

FRAMING SECTION TABLES	
Base Building - B.1	
Design	Closed
Leg & Rafter	C150-10
Girt	C80-75
Girt Centres	1.140m

OPENING SECTION TABLES	
Opening - A	
Jambs	C150-15
Head Beam	C150-10

VIEWS
2
3 1
4

TOTALSPAN® STEEL BUILDINGS

Project Ref: JH.309

© Copyright 2017 Spanbild NZ Ltd. All rights reserved.

Don Campbell
7 Swindon Lane
Amberley
7410
021 1521186

Gable Range - Design

Engineering Tables

HDC Approved Consent Document (In accordance with BA 2004, Sec. 49(1)) - Processed by : Carl Sherwood - BC No. 250126

FRAME F2

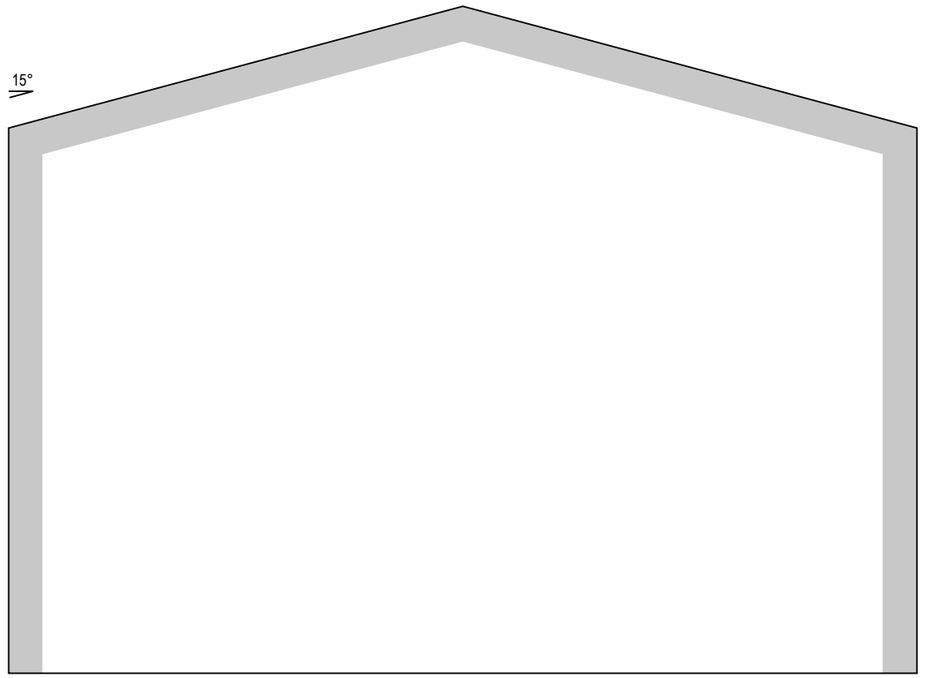

FRAMING SECTION TABLES	
Base Building - B.2	
Design	Closed
Leg & Rafter	C150-10

Base Building
B.2

VIEWS
2
3 1
4

© Copyright 2017 Spanbild NZ Ltd. All rights reserved.

Project Ref: JH.309

Don Campbell
7 Swindon Lane
Amberley
7410
021 1521186

Gable Range - Design

Engineering Tables

HDC Approved Consent Document (In accordance with BA 2004, Sec. 49(1)) - Processed by : Carl Sherwood - BC No. 250126

FRAME F3

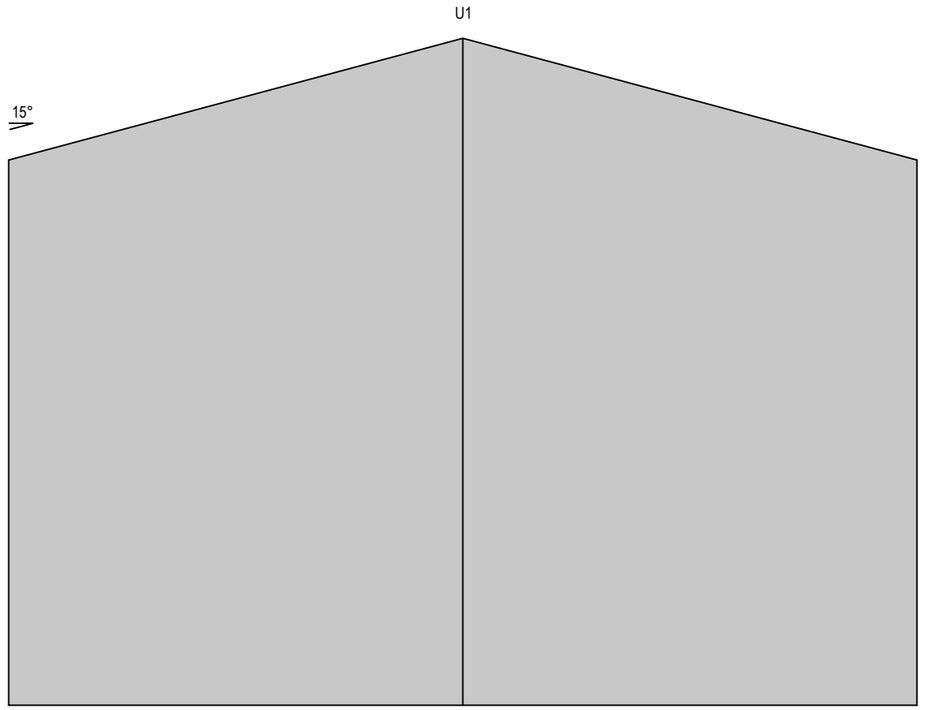

FRAMING SECTION TABLES	
Base Building - B.3	
Design	Closed
Leg & Rafter	C150-10
Upright - U1	C80-95
Girt	C80-75
Girt Centres	1.140m

VIEWS
2
3 1
4

TOTALSPAN® STEEL BUILDINGS

Project Ref: JH.309

© Copyright 2017 Spanbild NZ Ltd. All rights reserved.

Don Campbell
7 Swindon Lane
Amberley
7410
021 1521186

Gable Range - Design

Engineering Tables

HDC Approved Consent Document (In accordance with BA 2004, Sec. 49(1)) - Processed by : Carl Sherwood - BC No. 250126

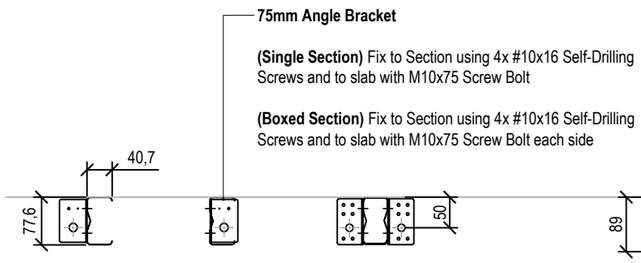

C80 Foundation Connections
SCALE 1:10

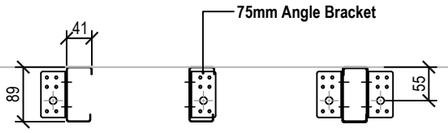

C90 Foundation Connections
SCALE 1:10

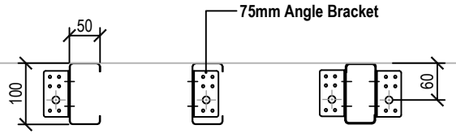

C100 Foundation Connections
SCALE 1:10

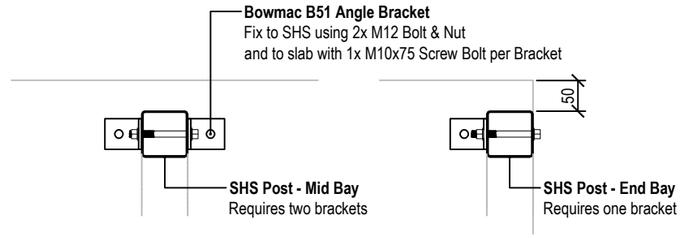

SHS Foundation Connections
SCALE 1:10

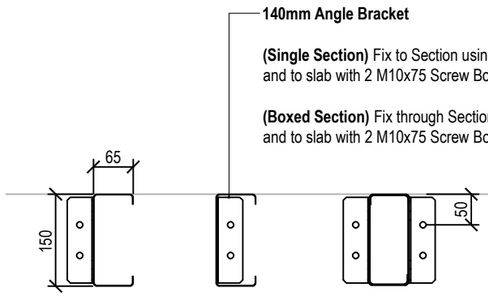

C150 Foundation Connections
SCALE 1:10

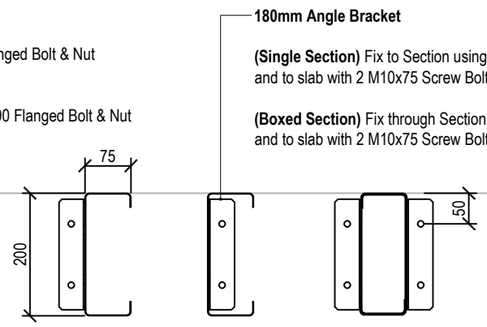

C200 Foundation Connections
SCALE 1:10

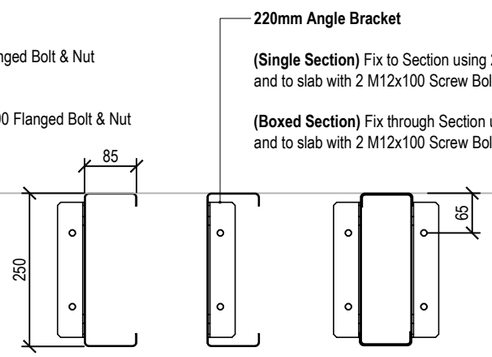

C250 Foundation Connections
SCALE 1:10

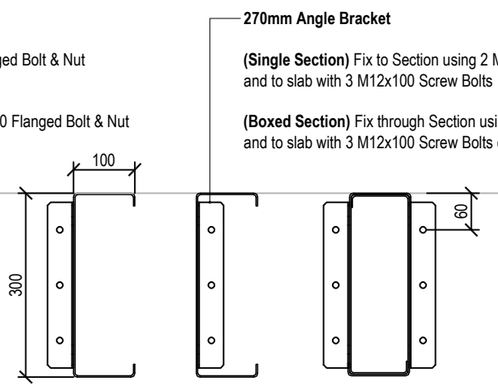

C300 Foundation Connections
SCALE 1:10

Important Notes

1. Recommended edge distances are listed above, brackets may be repositioned slightly +/- 3mm however concrete edge distance to bolt centre shall not be less than be 50mm
2. **C/B150-15 & C/B150-19 Portal Legs** shall have a M10x38mm Sqaure Washer to M10x75 Screw Bolts (otherwise, not required.)

HDC Approved Consent Document (In accordance with BA 2004, Sec. 49(1)) - Processed by : Carl Sherwood - BC No. 250126

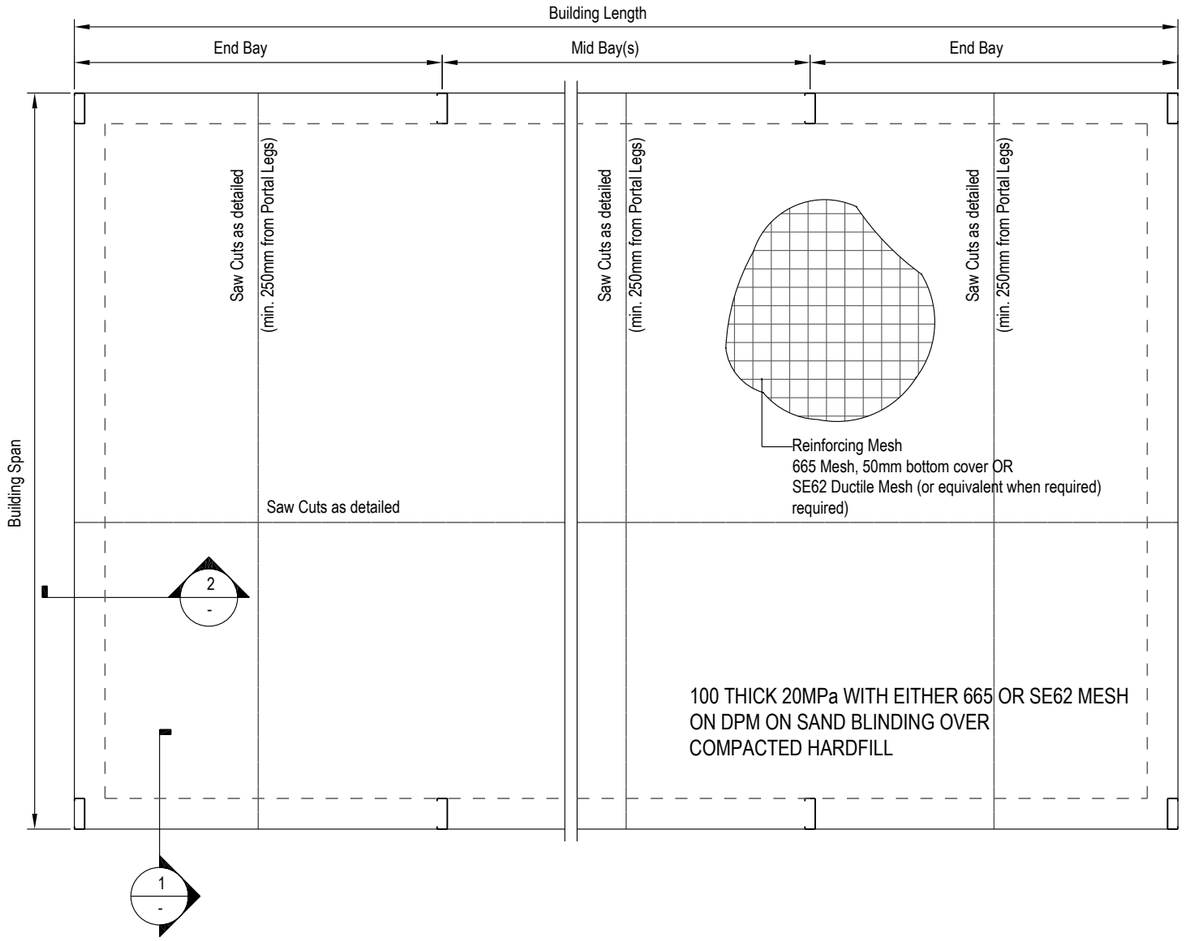

- **INDICATIVE SLAB PLAN (FOR NOTATION REFERENCE ONLY)**
SCALE 1:50

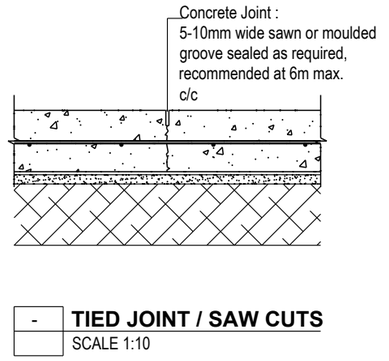

- **TIED JOINT / SAW CUTS**
SCALE 1:10

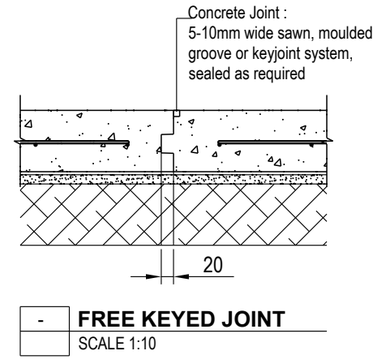

- **FREE KEYED JOINT**
SCALE 1:10

Important Notes

1. **Perimeter reinforcing**
   1.1. **Central reinforcing specified "along" building length;** shall continue "across" building span
   1.2. **Top and Bottom reinforcing specified "along" building length;** the lesser reinforcing specified (where applicable) shall be used for single central reinforcing "across" building span. Reinforcing "across" shall wrap around the corners 600mm to remain "continuous".
2. Slab thickness may be increased only in case of large machinery, equipment where heavier traffic loadings are required. Check control joint requirements as per CCANZ guidelines and install where recommended.
3. This slab has been designed in accordance with NZS3101:2006 and compliant to where lesser ductile mesh may be used per clause 5.3.2.7 (a) where "The yielding of reinforcement will not occur at the ultimate limit state".
4. Typical GL to FFL is 100mm for a "non-habitable" foundation.
5. Saw cuts to be minimum 250mm away from Portal Legs.
6. In areas where soil bearing is less than 225kPa UBC, excavate trench (max 600mm depth) to ground with 225kPa UBC and backfill with compacted hardfill.

Maximum Spacing of Free Joints (m) - as per CCANZ guidelines			
Steel	100mm Slab	120/125mm Slab	150mm Slab
665	26	21	17
663	37	30	25
661			35

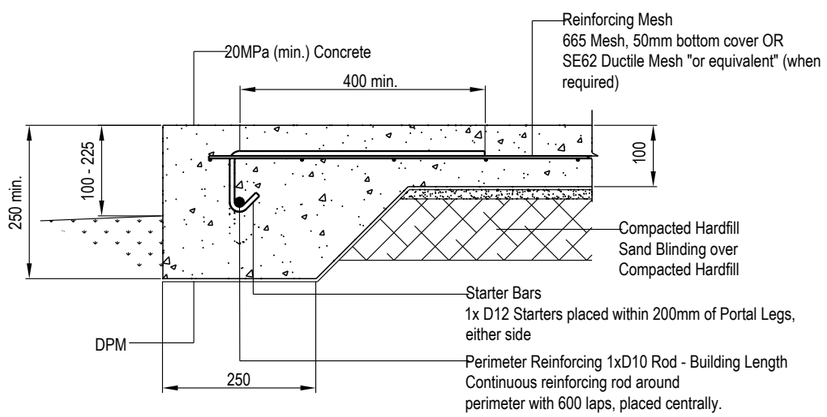

1 - **100MM FOUNDATION (CENTRAL REINFORCING)**
SCALE 1:10

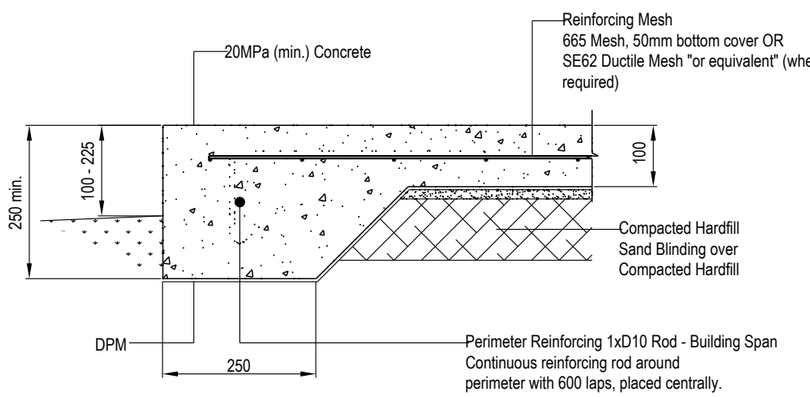

2 - **100MM FOUNDATION (CENTRAL REINFORCING)**
SCALE 1:10

TOTALSPAN®
STEEL BUILDINGS

Project Ref: JH.309

© Copyright 2017 Spanbild NZ Ltd. All rights reserved.

Don Campbell
7 Swindon Lane
Amberley
7410
021 1521186

Gable Range - Design

Foundation Details SD-F02

HDC Approved Consent Document (In accordance with BA 2004, Sec. 49(1)) - Processed by : Carl Sherwood - BC No. 250126

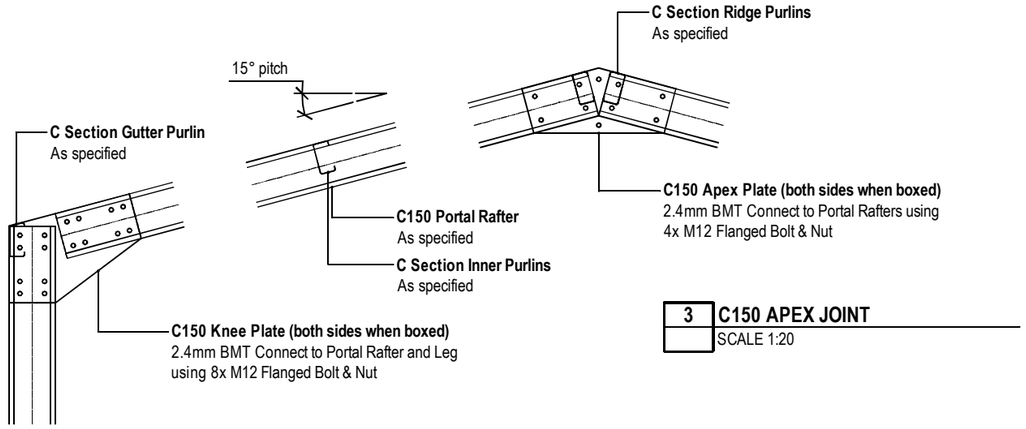

3 C150 APEX JOINT
SCALE 1:20

2 C150 KNEE JOINT
SCALE 1:20

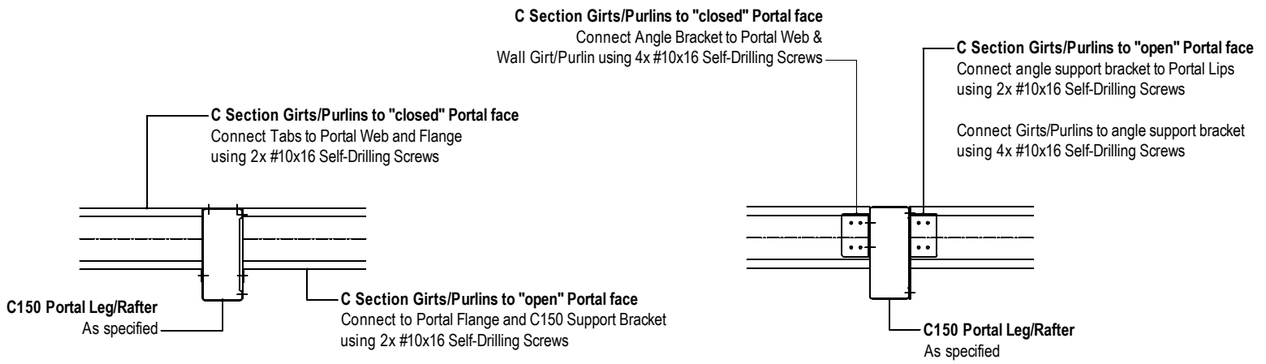

6 GIRT/PURLIN TABBED CONNECTION
SCALE 1:10

7 GIRT/PURLIN BRACKET CONNECTION
SCALE 1:10

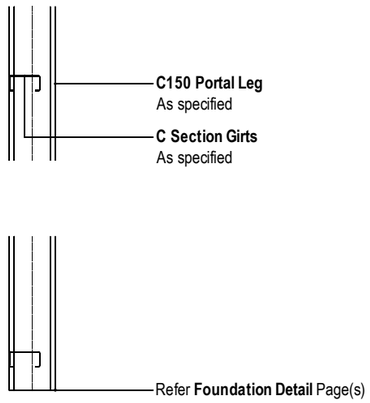

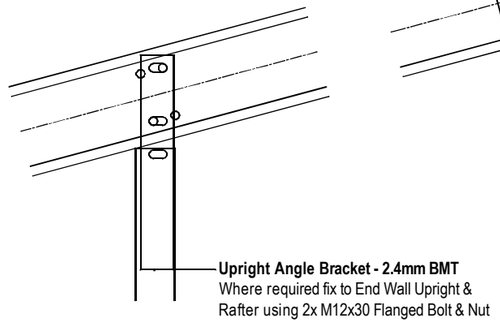

5 UPRIGHT TO RAFTER CONNECTION
SCALE 1:10

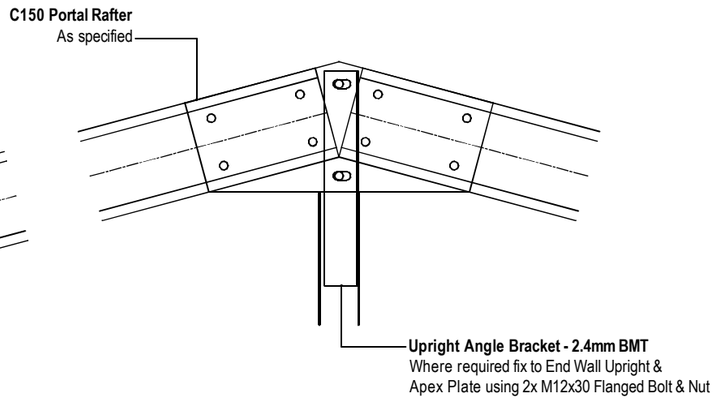

4 UPRIGHT TO APEX CONNECTION
SCALE 1:10

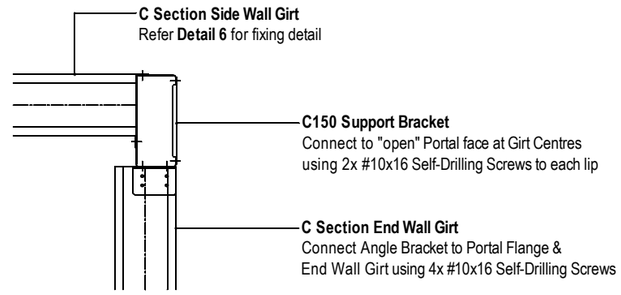

8 END WALL GIRT CONNECTION
SCALE 1:10

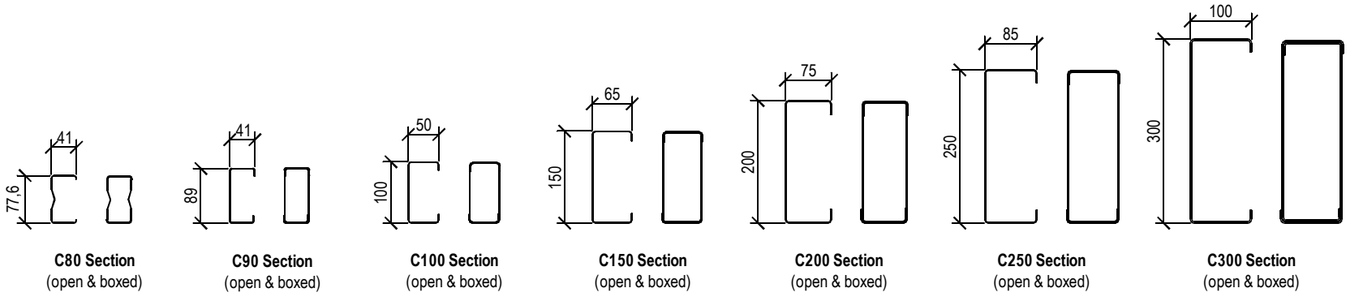

- C SECTION PROFILES (INCL. BOXING)
SCALE 1:20

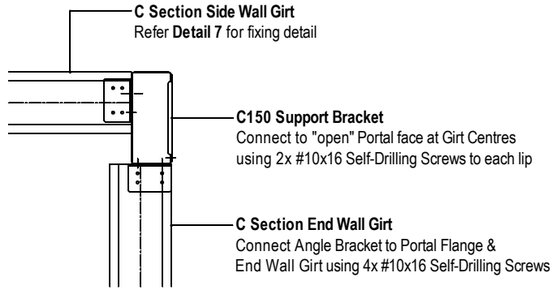

9 END WALL GIRT CONNECTION
SCALE 1:10

TOTALSPAN®
STEEL BUILDINGS

Project Ref: JH.309

© Copyright 2017 Spanbild NZ Ltd. All rights reserved.

Don Campbell
7 Swindon Lane
Amberley
7410
021 1521186

Gable Range - Design

Frame Details SD-P01

HDC Approved Consent Document (In accordance with BA 2004, Sec. 49(1)) - Processed by : Carl Sherwood - BC No. 250126

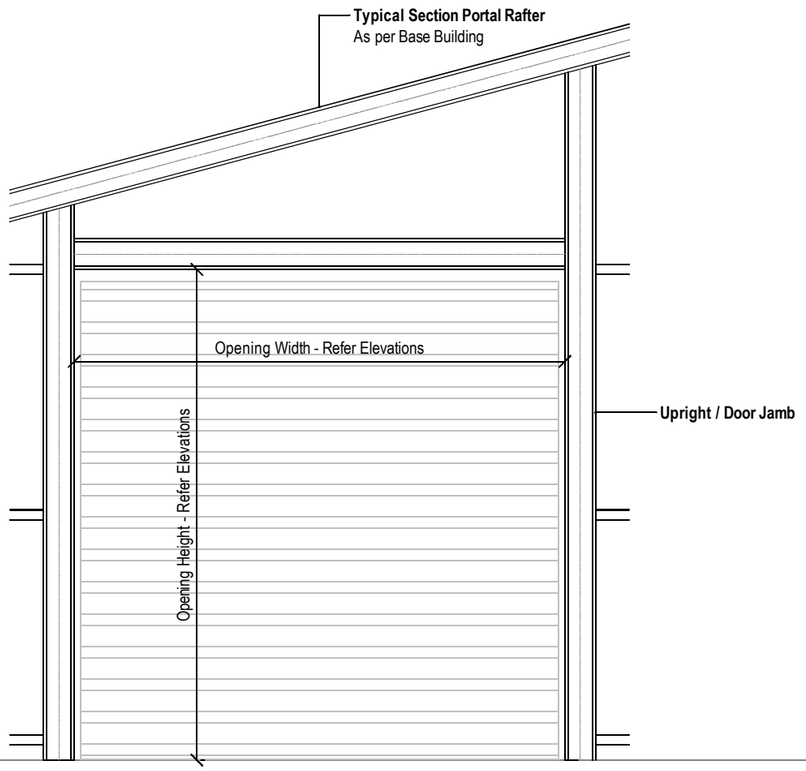

- DOOR JAMB/UPRIGHT TO RAFTER CONNECTION
SCALE 1:10

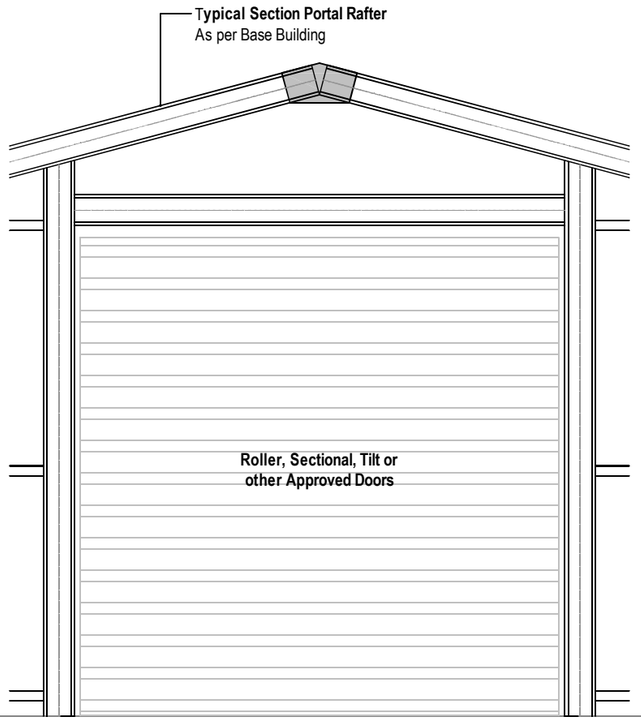

- HEAD BEAM TO DOOR JAMB CONNECTION
SCALE 1:10

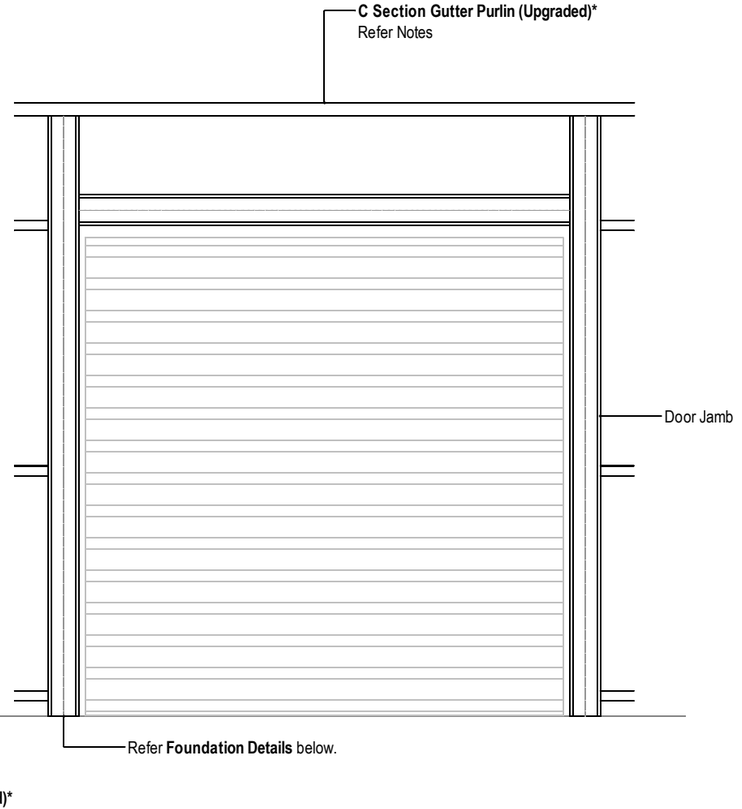

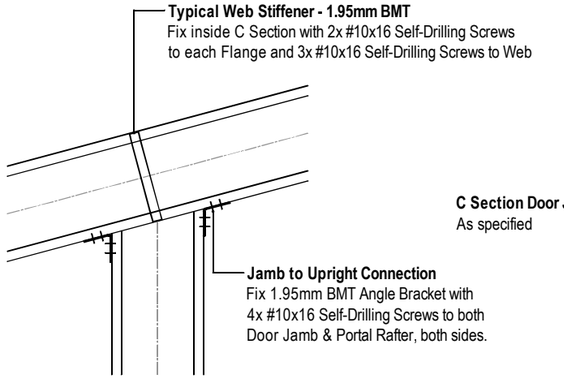

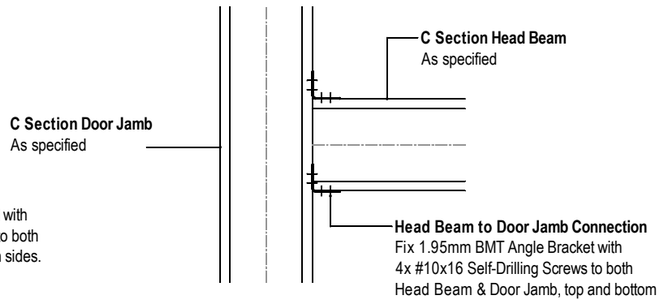

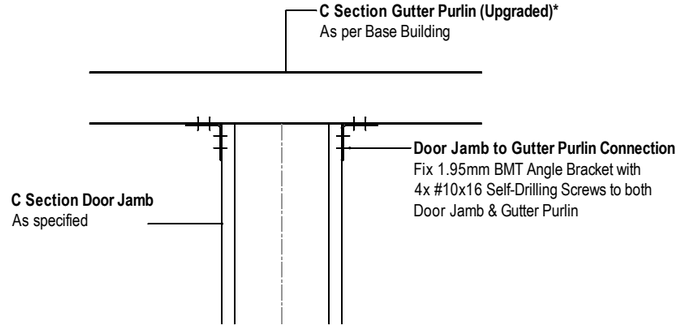

- HEAD BEAM TO GUTTER PURLIN CONNECTION
SCALE 1:10

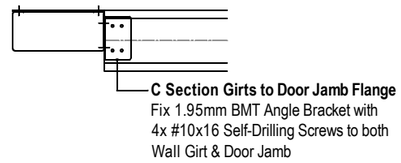

- GIRT TO DOOR JAMB CONNECTION
SCALE 1:10

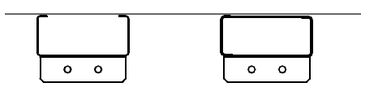

C150 Section Door Jambs
(open or boxed options)

- C150 Jamb to Foundation Connections
SCALE 1:10

TOTALSPAN®
STEEL BUILDINGS

Project Ref: JH.309

© Copyright 2017 Spanbild NZ Ltd. All rights reserved.

Don Campbell
7 Swindon Lane
Amberley
7410
021 1521186

Gable Range - Design

Major Openings SD-M01

HDC Approved Consent Document (In accordance with BA 2004, Sec. 49(1)) - Processed by : Carl Sherwood - BC No. 250126

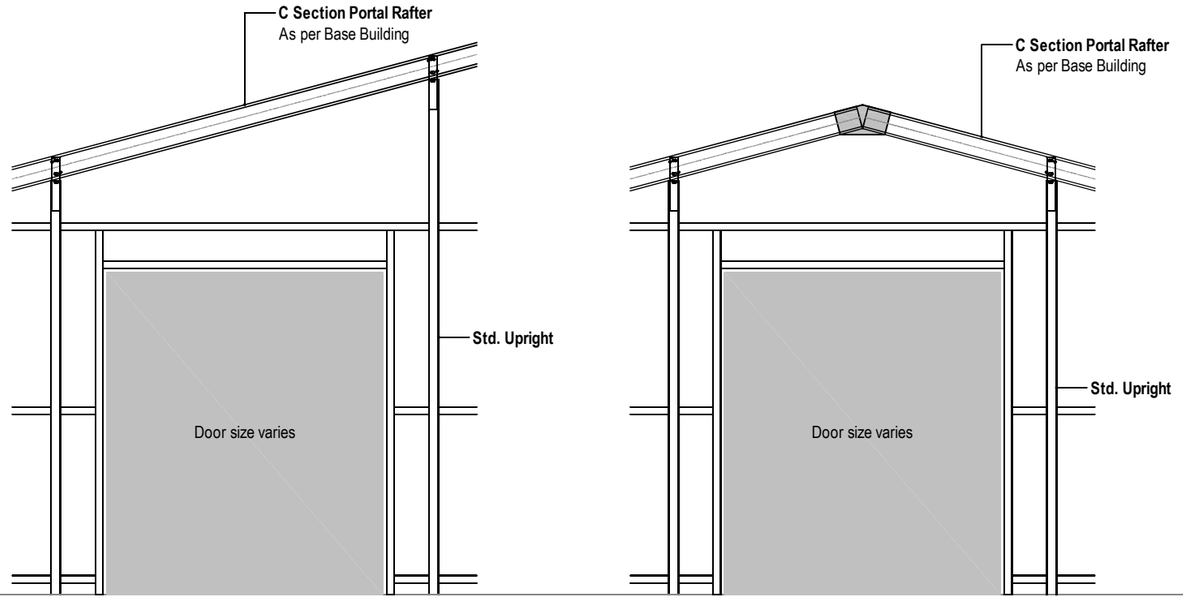

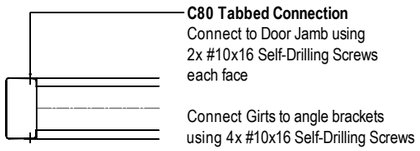

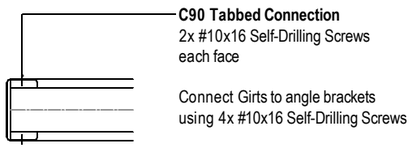

-	C SECTION TABBED CONNECTION
	SCALE 1:10

-	C SECTION NOTCHED CONNECTION
	SCALE 1:10

TOTALSPAN®
STEEL BUILDINGS

Project Ref: JH.309

© Copyright 2017 Spanbild NZ Ltd. All rights reserved.

Don Campbell
7 Swindon Lane
Amberley
7410
021 1521186

Gable Range - Design

Minor Door Openings SD-M05

HDC Approved Consent Document (In accordance with BA 2004, Sec. 49(1)) - Processed by : Carl Sherwood - BC No. 250126

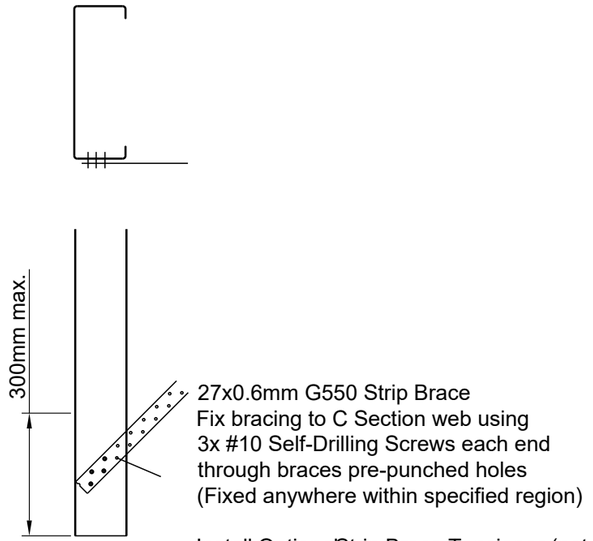

- SINGLE STRIP BRACE FIXING
SCALE 1:10

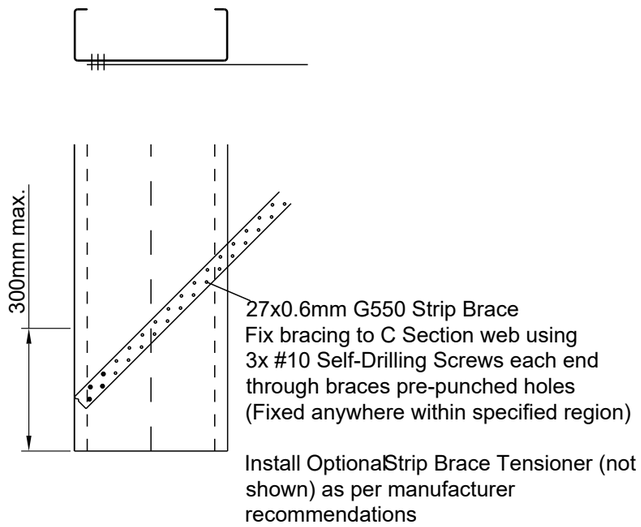

- SINGLE STRIP BRACE FIXING
SCALE 1:10

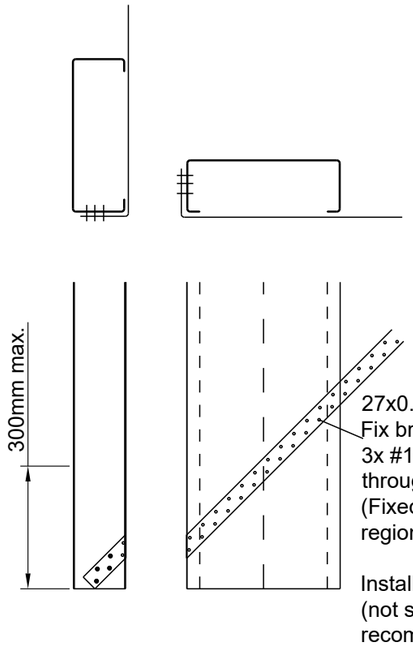

- SINGLE STRIP BRACE FIXING
SCALE 1:10

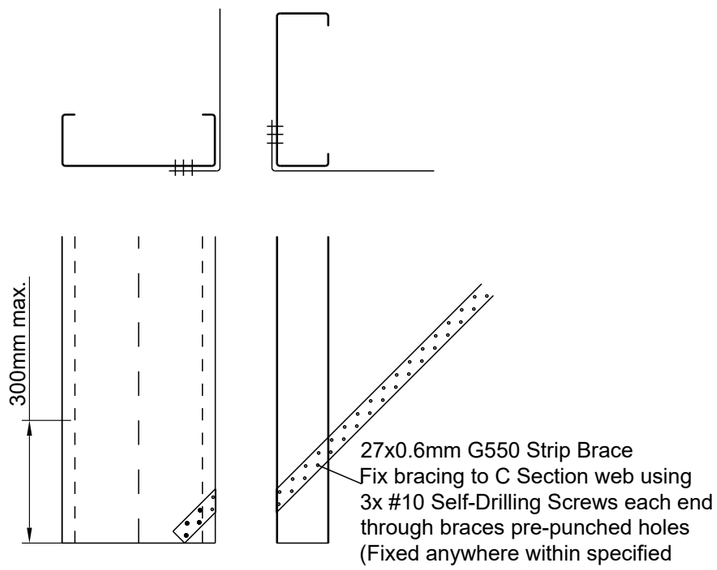

- SINGLE STRIP BRACE FIXING
SCALE 1:10

TOTALSPAN®
STEEL BUILDINGS

Project Ref: JH.309

© Copyright 2017 Spanbild NZ Ltd. All rights reserved.

Don Campbell
7 Swindon Lane
Amberley
7410
021 1521186

Gable Range - Design

Bracing Details

HDC Approved Consent Document (In accordance with BA 2004, Sec. 49(1)) - Processed by : Carl Sherwood - BC No. 250126

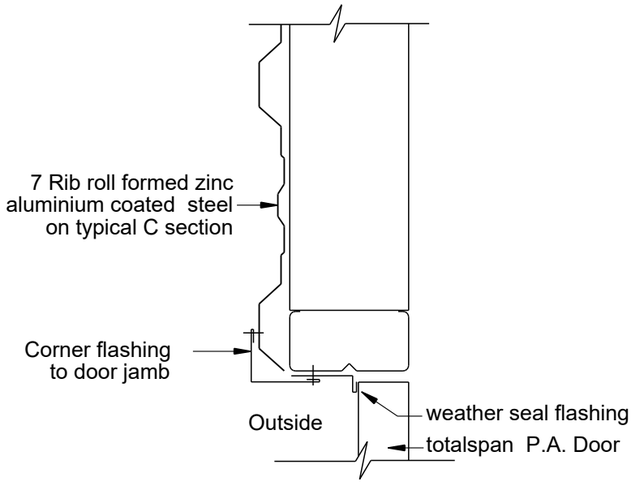

- **P.A. Door Jamb Detail**
  SCALE: NTS

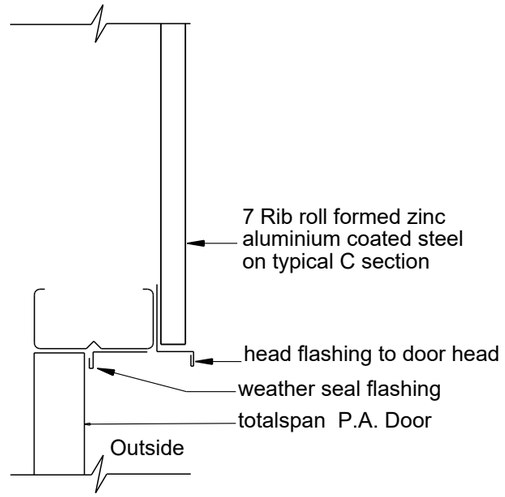

- **P.A. Door Head Detail**
  SCALE: NTS

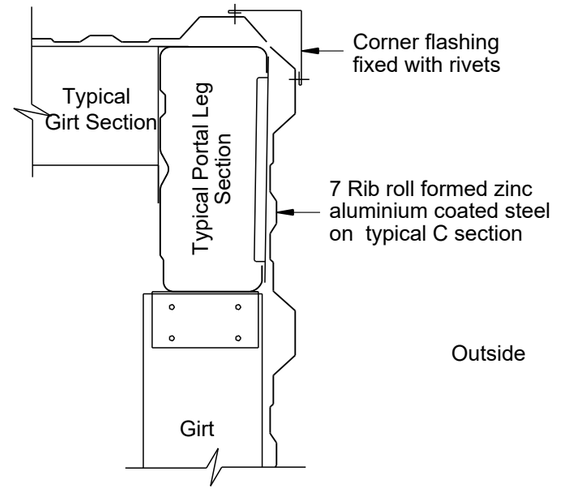

- **External Corner**
  SCALE: NTS

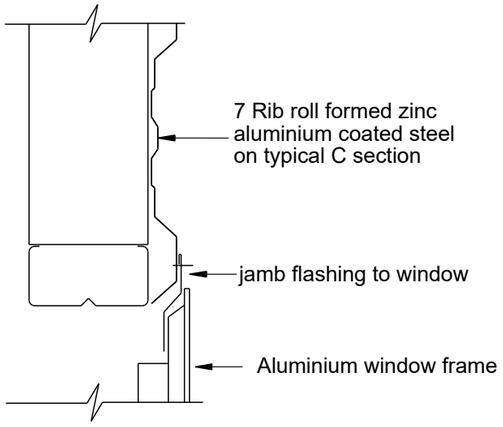

- **Window Jamb Detail**
  SCALE: NTS

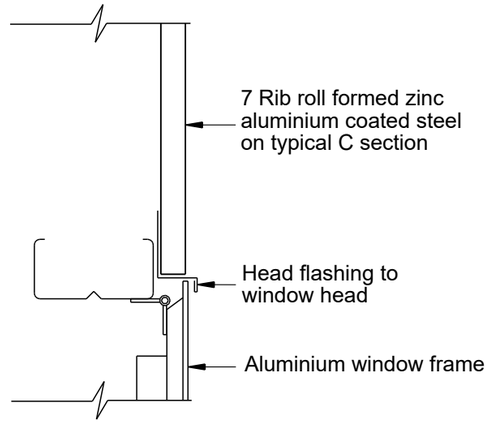

- **Window Head Detail**
  SCALE: NTS

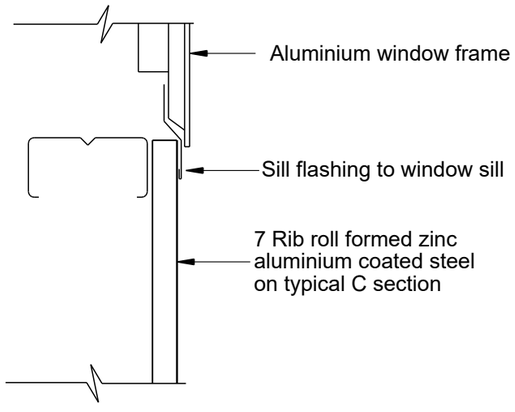

- **Window Sill Detail**
  SCALE: NTS

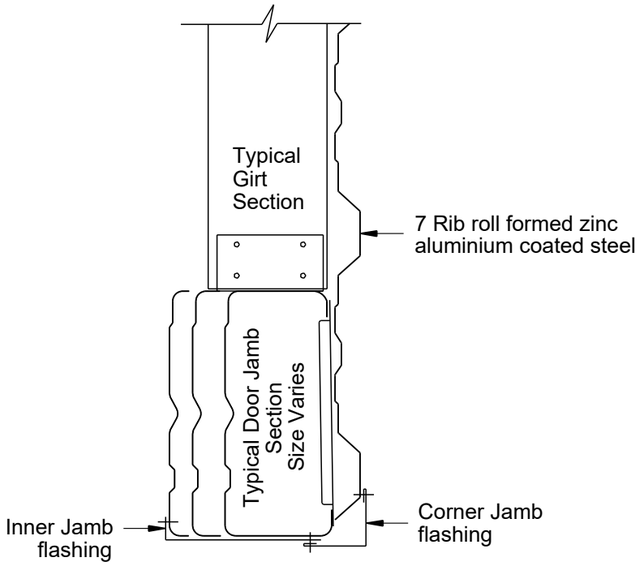

- **Main Access Door Jamb Detail**
  SCALE: NTS

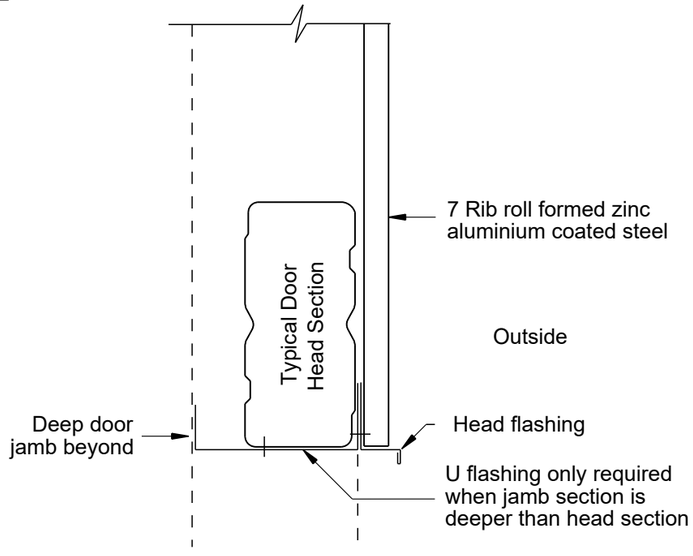

- **Main Access Door Head Detail**
  SCALE: NTS

TOTALSPAN®
STEEL BUILDINGS

Project Ref: JH.309

© Copyright 2017 Spanbild NZ Ltd. All rights reserved.

Don Campbell
7 Swindon Lane
Amberley
7410
021 1521186

Gable Range

Flashing Details

HDC Approved Consent Document (In accordance with BA 2004, Sec. 49(1)) - Processed by : Carl Sherwood - BC No. 250126

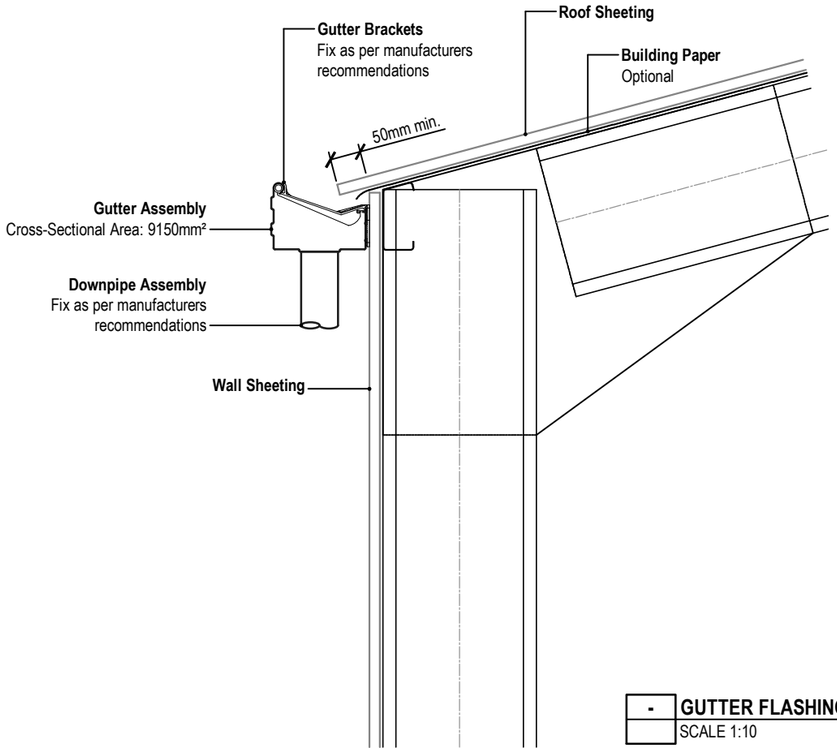

- **GUTTER FLASHING DETAIL**
  SCALE 1:10

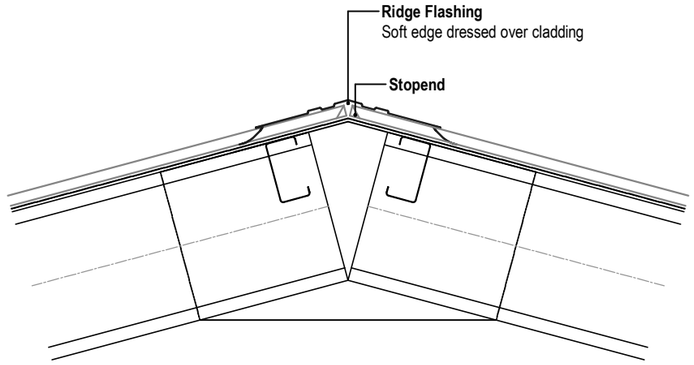

- **RIDGE FLASHING DETAIL**
  SCALE 1:10

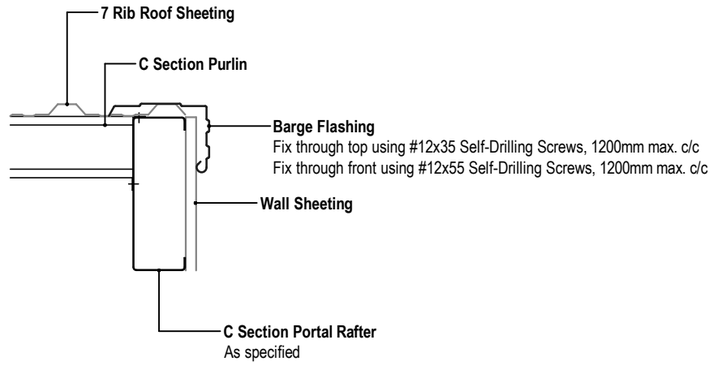

- **BARGE FLASHING DETAIL**
  SCALE 1:10

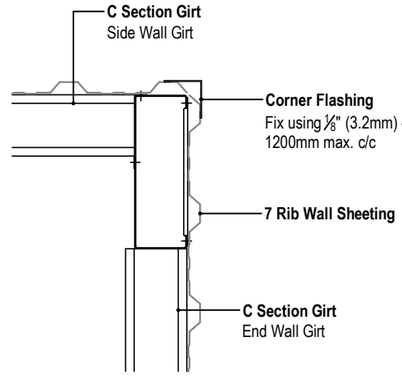

- **CORNER FLASHING DETAIL**
  SCALE 1:10

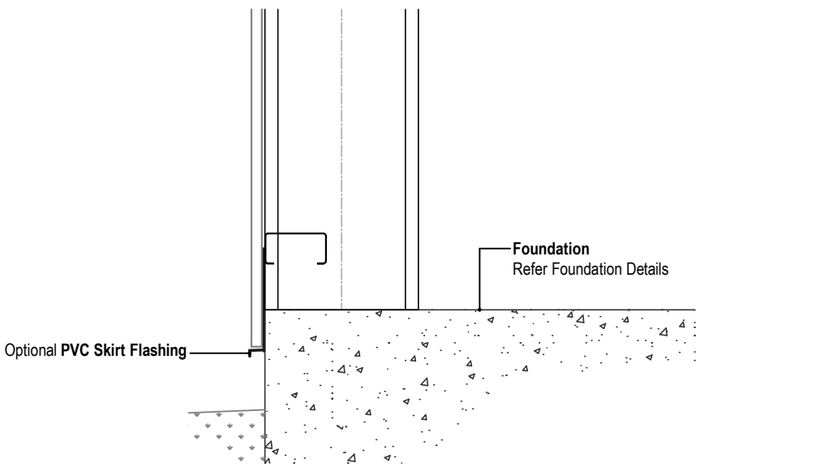

- **SKIRT FLASHING DETAIL**
  SCALE 1:10

Important Design Notes

1. Roof and Wall Sheeting shall be 0.35 - 0.55 B.M.T, AZ150 Coating, G550 Steel only. Alternative claddings (excluding light-weight translucent panel i.e. Ampelite), require an independent specific design certificate for the scope of work.
2. Wall Cladding to have minimum 50mm cover and 40mm min. clearance to ground level
3. Fixing pattern as per E2/AS1 or NZ MRM - NZ Metal Roof and Wall Cladding Code of Practice.
4. Flashings shall be fixed as per manufacturers recommendations.
5. Additional options may include:
   - 5.1. Snow straps for gutters
   - 5.2. Gutter purlin flashing
   - 5.3. Building paper in walls

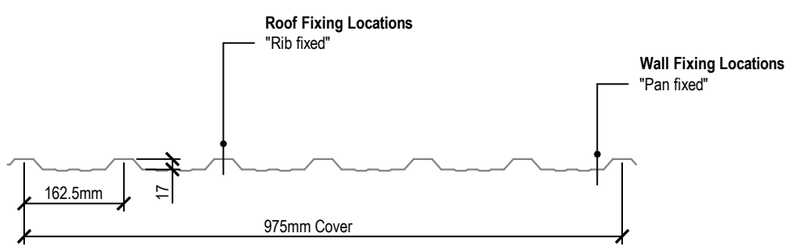

- **7 RIB CLADDING PROFILE**
  SCALE 1:10

TOTALSPAN®
STEEL BUILDINGS

Project Ref: JH.309

© Copyright 2017 Spanbild NZ Ltd. All rights reserved.

Don Campbell
7 Swindon Lane
Amberley
7410
021 1521186

Gable Range

Flashing Detail SD-E01

HURUNUI DISTRICT COUNCIL
P.O. Box 13 | Amberley 7441 | 66 Carters Road | Amberley 7410
Phone: 03 314-8816 | Email: info@hurunui.govt.nz
Web: hurunui.govt.nz | facebook.com/HurunuiDistrictCouncil

PROJECT INFORMATION MEMORANDUM

250126

Section 34, Building Act 2004

THE BUILDING	
Street address of building:	7 Swindon Lane, Amberley
Legal description of land where building is located:	LOT 6 DP 79189
Valuation number:	2143011114
Building Name:	
Location of building within site/block number:	
Level/unit number:	0
THE OWNER	
Name of owner:	Donald Melvern Campbell and Alison Teresa Campbell
Contact person:	Totalspan North Canterbury
Mailing address:	7 Swindon Lane,Amberley
First point of contact for communications with the council/building consent authority:	Totalspan North Canterbury PO Box 58,Woodend 7641 033100247 northcanterbury@totalspan.co.nz
BUILDING WORK	
This project information memorandum is confirmation that the following building work is to be undertaken:	Project: Construction of an IL1 steel framed and steel clad Totalspan building on a concrete slab Current, lawfully established use: Outbuildings

This project information memorandum is confirmation that the proposed building work may be undertaken, subject to the provisions of the Building Act 2004, and any requirements of the building consent attached.

Planning
This is a permitted activity under the Hurunui District Plan.
Utilities
Stormwater: Stormwater discharge to comply with the consent conditions as per Amberley Stormwater Consent CRC082988. Since the proposed shed is less than 30m2, a stormwater discharge application is not required and stormwater from the shed roof can be discharged to soak pit as proposed. At the time of building on the lot, stormwater runoff from buildings and hardstand areas resulting from up to and including the 24hr 2% AEP rainfall event shall be managed so no runoff enters any other property.
Stormwater (cont.): An Erosion and Sediment Control Plan needs to be supplied to the stormwater team for approval before earthworks start.

Signature:

Name: Anne Frankland
Position: Building Support Officer

On behalf of Hurunui District Council
Date: 30 April 2025

Reducing BUILDING WASTE

through the building waste hierarchy

1

Reduce, Rethink, Redesign

- Avoid over-ordering and have a plan for the use of leftover materials.
- Protect materials to prevent losses due to damage.
- Design potential waste streams at the inception and design phase.

2

Reuse, Repair, Repurpose

- Reuse products in their existing form, for example, framework.
- Retain leftover materials like plasterboard for the next job.
- Reuse timber for garden beads or boxing.

3

Recycling, Compost, Anaerobic Digestion

- Reprocess waste materials to create new product, such as take-back schemes for scrap products such as plastic pipes, paint and polystyrene.



4

Recovery Value

- Extract materials or energy from waste for further use or processing, for example, using waste collectors who can provide recovery services.

5

Disposal

- Waste sent to landfill.
- Waste that cannot be used in another way.



HURUNUI District Council

See Council's website at www.hurunui.govt.nz/property-rates/rubbish-recycling/additional-information for an A-Z on reducing building waste.





Small construction sites

THE ABSOLUTELY ESSENTIAL HEALTH AND SAFETY TOOLKIT

WORKSAFE

ABOUT THIS TOOLKIT

This toolkit[1] provides useful checklists for common health and safety issues on small construction sites. It will help you manage or avoid these issues to ensure the health and safety of everyone on and around your worksite, including workers, clients and members of the public. Links to more detailed advice are included where relevant.

Doing nothing is not an option

Construction is among the top four sectors for highest worker injury rates. Worker fatalities are more than double the average for all other sectors. The most common injuries are ones to the lower back and spine. The most common cause of serious harm injuries are slips, trips and falls from height. Males aged 20-24 are most likely to be injured.

The costs of workplace injuries to New Zealand business are substantial – ACC pay more than $100 million dollars per year in the construction sector. The direct and indirect costs of all workplace injuries in New Zealand are over $1.3 billion.

Make use of this toolkit. If we all work together we can make the construction industry a healthier and safer place to work in.

Health and safety legislation

The Health and Safety at Work Act 2015 (HSWA) is New Zealand's key work health and safety law. It introduces new responsibilities for managing the work related risks that can cause serious injury, illness or even death.If you have good health and safety practices in place now, you are likely to be well on your way. However the new Act introduces some new features and it's important for you to review your approach to work health and safety.

How to contact WorkSafe

For further advice on health and safety at work, contact the WorkSafe Response Team on (freephone) **0800 030 040**.

[1] The content in this toolkit has been adapted from the Health and Safety Executive publication *The absolutely essential health and safety toolkit for the smaller construction contractor* published in 2008 and available at www.hse.gov.uk
It does not cover legal requirements and is a guide only; for information on how to comply with the law, see the relevant legislation at www.legislation.govt.nz

CONTENTS

1.0 **General managment** 2

1.1 Managing a small construction site 3

1.2 When to notify WorkSafe 4

1.3 Contracting and subcontracting 4

2.0 **Health and safety checklist** 5

2.1 Site and services 6

2.2 Working at height 8

2.3 Moving material 10

2.4 Working with vehicles and machinery 11

2.5 Critical health risks 12

2.6 Worker wellbeing 14

2.7 Emergency situations 15

1.0 General management

IN THIS SECTION:

1.1 Managing a small construction site

1.2 When to notify WorkSafe

1.3 Contracting and subcontracting

1.1 Managing a small construction site

The checklists below cover some things to consider when managing a small construction site under the Health and Safety at Work Act 2015 (HSWA) which will imposes duties on the 'PCBU'.

What is a PCBU?

The HSWA defines 'PCBU'. It is essentially a person conducting a business or undertaking, whether alone or with others and whether for profit or gain or not. The PCBU is in the best position to control risks to work health and safety. This is why the PCBU has the primary duty to ensure health and safety.

Despite its name, a PCBU can be a business entity, such as a company, as well as an individual person. An individual person will generally be a PCBU if they are a sole trader or a self-employed person.

Examples of a PCBU include:

- a manufacturing business
- an import business
- an owner-driver of their own courier business
- a self-employed person operating their own business
- a partnership
- a building company, whether a principal contractors or a sub-contractors
- a not-for-profit organisation that employs admin staff.

PCBUs have a number of duties under the Health and Safety at Work Act. PCBUs with overlapping duties must work together to achieve health and safety at work.

Keep this in mind when reading the checklists. Many of the things covered in this booklet will help PCBUs to meet their duties under the HSWA.

See the WorkSafe website for more information.

Do you make sure workers:

- are trained, competent and fit to do the job safely and without putting their own or others' health and safety at risk?
- are properly supervised and given clear instructions?
- have access to washing and toilet facilities?
- have the right tools, equipment, plant and personal protective equipment?
- are involved in discussions about health and safety issues?
- are given opportunities to participate in improving health and safety?



1.2 When to notify WorkSafe

In an emergency: *call the emergency services by dialling **111***.

A PCBU must notify WorkSafe as soon as possible if any of the following 'notifable events' occur:

- the death of a person
- a notifiable injury or illness
- notifiable incident.

Call the WorkSafe Response Team on freephone **0800 030 040** (24 hours) and choose option 1.

Fill in and submit a notification form within seven days at worksafe.govt.nz *Reporting: Serious Harm*.

Some types of work also require you to notify WorkSafe. These include where a worker could fall 5 m or more, some excavation work, working involving asbestos or working underground. For a full list of notifiable work and more information on notifable events, see the WorkSafe website.

For a hazardous substances emergency: call the New Zealand Fire Service on 111 and then the WorkSafe Response Team directly on 0800 030 040.

DON'T DISTURB THE SCENE

You must not interfere with an accident scene until authorised by a health and safety inspector. Exceptions include certain situations, such as when people or property are at risk. If you require scene clearance or other immediate assistance from a health and safety inspector, call WorkSafe on 0800 030 040.

1.3 Contracting and subcontracting

When contracting or subcontracting work do you:

- check the health and safety performance of the people you plan to use?
- give them the health and safety information they need for the work?
- talk about the work with them?
- hold regular discussions about how the work is going, including safety problems and concerns?
- make sure that you have provided everything you agreed (eg safe scaffolds, the right plant, access to toilets and other welfare facilities, etc)?
- check their performance and remedy any shortcomings?

For more information for PCBUs check for updates on the WorkSafe and New Zealand Legislation websites:

worksafe.govt.nz

www.legislation.govt.nz

2.0 Health and safety checklist

IN THIS SECTION:

2.1 Site and services

2.2 Working at height

2.3 Moving material

2.4 Working with vehicles and machinery

2.5 Critical health risks

2.6 Worker wellbeing

2.7 Emergency situations

The following pages provide you with an essential checklist of some of the hazards most commonly found on construction sites.

The questions will help you decide whether your site is a safe and healthy place to work. It is not a full list.

2.1 Site and services

Access on site

- Can everyone get to their place of work safely – and work there safely?
- Are access routes in good condition and clearly signposted?
- Do edges that people could fall from have suitable edge protection?
- Are holes protected with clearly marked and fixed covers to prevent falls?
- Is the site tidy, and are materials stored safely?
- Is lighting good enough?



Electricity and other services

- Have all necessary services been provided on site before work begins? Have you also identified existing services present on site (eg electric cables or gas mains) and taken effective steps, if necessary, to prevent harm from them?
- Is the supply isolated from earth with a voltage between phase and earth conductors not exceeding 230 volts?
- Are electrical extension cords connected to power tools using a Residual Current Device (RCD) or Isolating Transformer?

- Are cables and leads protected from damage?
- Are all connections to the system properly made and are suitable plugs used?
- Are tools and equipment checked by users, visually examined on site and regularly inspected and tested by a competent person?
- Have hidden electricity cables and other services been located (eg with a locator and plans) and marked, and have you taken precautions for safe working?
- Where there are overhead lines, has the electricity supply been turned off, or have other precautions been taken, such as providing 'goal posts' or taped markers?



Protecting the public

- Is the worksite fenced off from the public?
- Do roadworks have barriers around them and are the barriers lit?
- Are the public protected from falling material?
- Is clear signage present to warn people of danger (eg 'Keep out', 'Asbestos removal in progress')?

When work has stopped for the day:

- is the boundary secure?
- have steps been taken to prevent any unauthorised access (eg are all ladders removed or their rungs boarded so they can't be used)?
- are excavations and openings securely covered or fenced off?
- is all plant immobilised to prevent unauthorised use?
- are bricks and materials safely stacked?
- are flammable or dangerous substances locked away in secure storage places?



2.2 Working at height

- Have you ensured there is appropriate and fit-for-purpose means to prevent workers from falling from height?
- Have you planned the work properly and identified suitable precautions to make sure work can be carried out safely?
- Have you thought about whether you can avoid working at height by using different equipment or a different work method?
- Can you use equipment that will prevent a fall from happening, such as scaffolding or a mobile elevating work platform?
- Can you put in place measures to reduce the distance and consequences of a fall should one happen, such as nets, soft landing systems or personal fall prevention and protection equipment (eg a harness system)?
- Will the weather conditions threaten the health and safety of those carrying out the work?
- Have you thought about all the options and are you certain that you are gaining access to height using the safest means possible?

For more information, see worksafe.govt.nz

Scaffolds

- Are scaffolds erected, altered and dismantled by competent people?
- Are all uprights provided with base plates (and, where necessary, timber soleboards)?
- Are all uprights, ledgers, braces and out riggers in position?
- Is the scaffold secured to the building or structure in enough places to prevent collapse?
- Are there double guard rails and toe boards, or other suitable protection, at every edge to prevent falling?
- Are additional guards provided to prevent stacked materials such as bricks falling from scaffolds (eg kickboards, toeboards or screens)?
- Are the working platforms fully planked, and are the planks arranged to avoid tipping or tripping?
- Are there effective barriers or warning notices in place to stop people using an incomplete scaffold (eg where working platforms are not fully planked)?
- Is the scaffold strong enough to carry the weight of materials stored on it and are these evenly distributed?



- Are scaffolds being properly maintained?
- Does a competent person inspect the scaffold or proprietary mobile scaffold regularly (eg at least once a week; and always after it has been altered, damaged and following bad weather)?
- Are the results of inspections recorded?
- Are scaffolds erected using using safe work methods, and are they being used according to the supplier's and/or manufacturer's instructions?
- Have the wheels of mobile scaffolds been locked when in use and are the platforms empty when they are moved?
- Are gates (including guardrails being used as gates) and hatches across access points self-closing?
- Are working platforms placed as close as practicable to the working face to reduce the risk of people or materials falling through the gap?

For more information see worksafe.govt.nz

Ladders

- Choose the right tool for the job – can you buy or hire some alternative equipment that would provide a safer means of access?
- Are they in good condition?
- Do ladders rest against a solid surface and not on fragile or insecure materials?



- Are ladders secured at the top and bottom to prevent them slipping sideways and outwards?
- Do ladders rise at least a metre above the landing place? If not, are there other handholds available?
- Are the ladders positioned so that users don't have to overstretch?
- Do you have to use the top three rungs of a stepladder? If so your stepladder is too short.
- Is the user competent? Those using ladders should be trained to use the equipment safely.
- Can users maintain three points of contact at all times?
- Are materials being transported safely (ie not carried up a ladder)? Carrying materials up a ladder increases the risk of falling.

For more information see worksafe.govt.nz

Roofwork

- Is there edge protection to stop people or materials falling?
- Where nets are used, have they been installed properly?
- Have you identified brittle roof materials, such as cement sheets and roof lights?
- Have you taken precautions to stop people falling through fragile materials when working on the roof (eg by providing barriers, covers or working platforms)?
- Are people kept away from the area below the roof work?
- Are roofworkers trained and experienced to recognise the risks and are they competent to do the work?

For more information see worksafe.govt.nz

2.3 Moving material

Manual handling

- Are there heavy materials such as roof trusses, steel beams, kerbstones or bagged products that could cause injury if they have to be moved by hand?
- If so, can you:
  - choose lighter materials?
  - use trolleys, hoists, telehandlers and other plant or equipment so that manual lifting of heavy objects is kept to a minimum?
  - order materials such as cement and aggregates in units that are a manageable weight (eg 25 kg bags)?
  - avoid the repetitive laying of heavy building blocks or other masonry units (eg weighing more than 20 kg)?
- Have people been instructed and trained how to use lifting aids and other handling equipment safely?
- Have people been trained how to lift safely?

For more information see worksafe.govt.nz



Loading and unloading goods

- Have you checked that the load has not moved or destabilised during the journey to site?
- Is there an exclusion zone around the loading/unloading area to keep people who are not involved away from the work?
- Have you planned your method of unloading?

- Does your lifting equipment have a current annual certificate?
- Do you have to access the back of the truck at all, or can the preparation work be done from ground level? If not:
  - do you have a safe way of getting up and down from the back of the vehicle?
  - what do you have in place to prevent workers from falling off the back of the vehicle?
  - are your employees provided with sensible safety footwear with a good grip?

For more information see worksafe.govt.nz

Excavations

- Is the stability of the ground known to ensure against collapse? Or if the stability of the ground is not known, is there a support system in place for the excavation to prevent collapse, or has it been sloped or battered back to a safe angle? (Note: an excavation more than 1.5 m deep that is deeper than it is wide at the top must be notified to WorkSafe.)
- Is a safe method used for putting in the support, without people working in an unsupported trench?
- Is there safe access into the excavation (eg a sufficiently long, secured ladder)?
- Are there barriers or other protection to stop people and vehicles falling in?
- Is the excavation fenced off from unauthorised access?
- Are properly secured stop blocks provided to prevent tipping vehicles falling in?
- Could the excavation affect the stability of neighbouring structures or services?
- Are materials, spoil and plant stored away from the edge of the excavation to reduce the chance of a collapse?
- Is the excavation regularly inspected by a competent person?
- Are the results of inspections recorded?

For more information see worksafe.govt.nz

2.4 Working with vehicles and machinery

Traffic, vehicles and plant

- Have prestart checks been done, and any issues dealt with?
- Are vehicles well maintained, and are log books and maintenance records present and up to date?
- Are vehicles only operated by people trained to do so (where applicable) and are manufacturer's instructions followed?
- Are vehicles and pedestrians kept apart?
- If not, do you:
  - provide barriers to separate them as much as you can?
  - display warning signs?
- Are people kept away from slewing vehicles, or, if not, can you use a zero tail swing machine?
- Are vehicles and plant properly maintained, for example:
  - do the steering, brakes, hydraulics, mirrors and any other vision aid work properly?
  - are tyres in good condition and at the correct pressure?
  - are reversing alarms active?

- Can reversing be avoided (eg by using a one-way system or a turning area? If not, are properly trained spotters used)?
- Have drivers received proper training and are they competent and fit to use the vehicles or plant they are operating?
- Are loads properly secured?
- Have you made sure that passengers are only carried on vehicles designed to carry them?
- Have you made sure that plant and vehicles are not used on dangerous slopes?
- If you need to work on or drive across sloping ground, have you checked that the plant and vehicles are safe to use?
- Do you check that securing pins are in place on excavator quick hitches?

Tools and machinery

- Are the right tools or machinery being used for the job?
- Are all dangerous parts guarded (eg gears, chain drives, projecting engine shafts)?
- Are guards secured and in good repair?
- Are tools and machinery maintained in good repair and are all safety devices operating correctly?
- Are all operators trained and competent?

For more information see worksafe.govt.nz

2.5 Critical health risks

Hazardous substances

- Have you identified all harmful substances and materials, such as asbestos, lead, solvents, paints, cement and silica dust (eg from cutting concrete, bricks, rocks etc)?
- Is protective clothing and respiratory equipment provided?
- Have you checked whether a worker with the relevant approval is needed to deal with asbestos on site? (Most work with asbestos requires permission from WorkSafe, although you can do some very limited work with materials that contain asbestos without one.)



- Have you identified and put into place precautions to prevent or control exposure to hazardous substances, by:
  - doing the work in a different way, to remove the risk entirely?
  - using a less hazardous material?
  - using tools fitted with dust extraction?
  - using tools fitted with water suppression?
  - installing warning signs to show where work involving hazardous substances is taking place?
- Have workers had information and training so they know what the risks are from the hazardous substances used and produced on site, and what they need to do to avoid those risks?
- Have you arranged health monitoring for employees exposed to certain hazardous substances (eg lead, silica, cement, sensitisers such as twopack adhesives or coatings)?

For more information see worksafe.govt.nz

Noise

- Have you identified and assessed workers' exposure to noise?
- Have workers had information and training so they know what the risks are from noise on site, and what they need to do to avoid those risks?
- Can the noise be reduced by using different working methods or selecting quieter plant (eg by fitting breakers and other plant or machinery with silencers)?
- Are people not involved in the work kept away from the source of the noise?
- Is suitable hearing protection provided and worn in noisy areas?
- Have hearing protection zones been marked?
- Have you arranged health surveillance for employees exposed to high levels of noise?

Personal protective equipment

- Is suitable equipment provided to protect the head, eyes, hands and feet where appropriate?
- Do workers wear their protective equipment, and do they wear it correctly?
- Have workers been trained in the safe use, care and storage of protective equipment?

For more information see worksafe.govt.nz



2.6 Worker wellbeing

Amenities and facilities

- Has a suitable toilet been provided?
- Is there a clean wash basin, hot/warm water, soap and towel?
- Is wet-weather gear provided for those who have to work in wet conditions?
- Is there a place where workers can take shelter and have meals? Do they have access to drinking water?
- Is there a suitable first-aid kit?

For more information see worksafe.govt.nz

Workloads and fatigue

- Do workers take regular, quality rest breaks in their working day?
- Are working hours reasonable and not too long? If longer working days are required, are start and finish times staggered, and/or are longer rest breaks and periods off work allowed?
- Are tasks scheduled suitably throughout a work period (eg critical jobs are avoided during the low body clock period of 3 pm to 5 pm)?
- Is work scheduled to allow enough time for completion?
- Are monitoring and limitations in place for overtime worked, consecutive night shifts, shift swapping and on-call duties?
- Are jobs rotated to minimise exposure to extreme temperature and excessive mental or physical demands?
- Is fit-for-purpose plant, machinery and equipment used?
- Are workloads practical and manageable, with consideration given to any work flow changes (eg machinery breakdowns or unplanned absences)?

Alcohol and drugs

- Is there a policy and procedure in place to constructively manage alcohol- and other drug-related hazards?
- Are workers monitored for signs of alcohol and drug use (eg dizziness, slurred speech, drowsiness, sudden aggressive or violent behaviour, lack of or impaired coordination/relflexes)?

For more information see worksafe.govt.nz



2.7 Emergency situations

Emergencies

- Are there emergency procedures (eg for evacuating the site in case of fire)?
- Do people on site know what the procedures are and where the nearest emergency centre is?
- Is there a means of raising the alarm, and does it work?
- Is there a way to contact the emergency services from site?
- Are there enough suitable escape routes and are these kept clear?
- Are first aid arrangements good enough for the site, and is there someone available who can administer first aid if needed?

Fire

- Is the quantity of flammable materials, liquids and gases kept to a minimum?
- Are they properly stored (eg are gas cylinders chained in position)?
- Are flammable gas cylinders returned to a ventilated store at the end of the shift?
- Are smoking and other ignition sources banned in areas where gases or flammable liquids are stored or used?
- Are gas cylinders, associated hoses and equipment properly maintained and in good condition?
- When gas cylinders are not in use, are the valves fully closed?
- Is flammable and combustible waste removed regularly and stored in suitable bins or skips?
- Are suitable fire extinguishers provided?

Notes

Disclaimer

This publication provides general guidance. It is not possible for WorkSafe to address every situation that could occur in every workplace. This means that you will need to think about this guidance and how to apply it to your particular circumstances.

WorkSafe regularly reviews and revises guidance to ensure that it is up-to-date. If you are reading a printed copy of this guidance, please check worksafe.govt.nz to confirm that your copy is the current version.

ISBN: 978-0-478-42543-7 (print)
ISBN: 978-0-478-42544-4 (online)

Published: July 2018

PO Box 165, Wellington 6140, New Zealand

worksafe.govt.nz



Except for the logos of WorkSafe, this copyright work is licensed under a Creative Commons Attribution-Non-commercial 3.0 NZ licence.

To view a copy of this licence, visit http://creativecommons.org/licenses/by-nc/3.0/nz

In essence, you are free to copy, communicate and adapt the work for non-commercial purposes, as long as you attribute the work to WorkSafe and abide by the other licence terms.

WSNZ_1211_JUL 2018

ISBN: 978-0-478-42543-7 (print)
ISBN: 978-0-478-42544-4 (online)

WORKSAFE
NEW ZEALAND | MAHI HAUMARU AOTEAROA

Level 6, 86 Customhouse Quay
PO Box 165, Wellington 6140

0800 030 040 worksafe.govt.nz

HDC Approved Consent Document (In accordance with BA 2004, Sec. 49(1)) - Processed by : Carl Sherwood - BC No. 250126

Sediment Control Management Plan

Date: 15/4/2025

Client: Cameron Project

Address: 7 Swindon Lane, Amberley

This erosion and sediment control plan has been prepared in accordance with Environment Canterbury's Builders Pocket Guide (BPG) and Erosion and Sediment Control Guidelines (2007). For more information and guidance on good practice requirements please refer the Builders Pocket Guide website (www.bpg.co.nz).

We propose to manage erosion on the site in the following ways:

- The site is only excavated for the foot print of our building; the rest of the site will remain undisturbed.

" The drive is used for access to and from the site.

- Our buildings are relatively quick to build so the site is kept tidy and rubbish free at all times.

- Our company has instructed our concrete supplier to clean all trucks on site within a bunded area.

- Our contract manager will also assess the site for sediment control before works begin to ensure appropriate measures are in place.

HDC Approved Consent Document (In accordance with BA 2004, Sec. 49(1)) - Processed by : Carl Sherwood - BC No. 250126

Totalspan Stormwater Management Plan

Date: 15/4/2025

Client: Cameron Project

Address: 7 Swindon Lane, Amberley

ROOF AREA OF TS BUILDING: 28m2

GUTTER PROFILE:



PLAN:

The stormwater management plan is to run the 2 x 80mm downpipe into a 100 mm uPVC stormwater pipe and go at 1:100 fall into a soak pit as indicated on the site plan.

Thank you.

HDC Approved Consent Document (In accordance with BA 2004, Sec. 49(1)) - Processed by : Carl Sherwood - BC No. 250126

SOAK PIT DETAILS

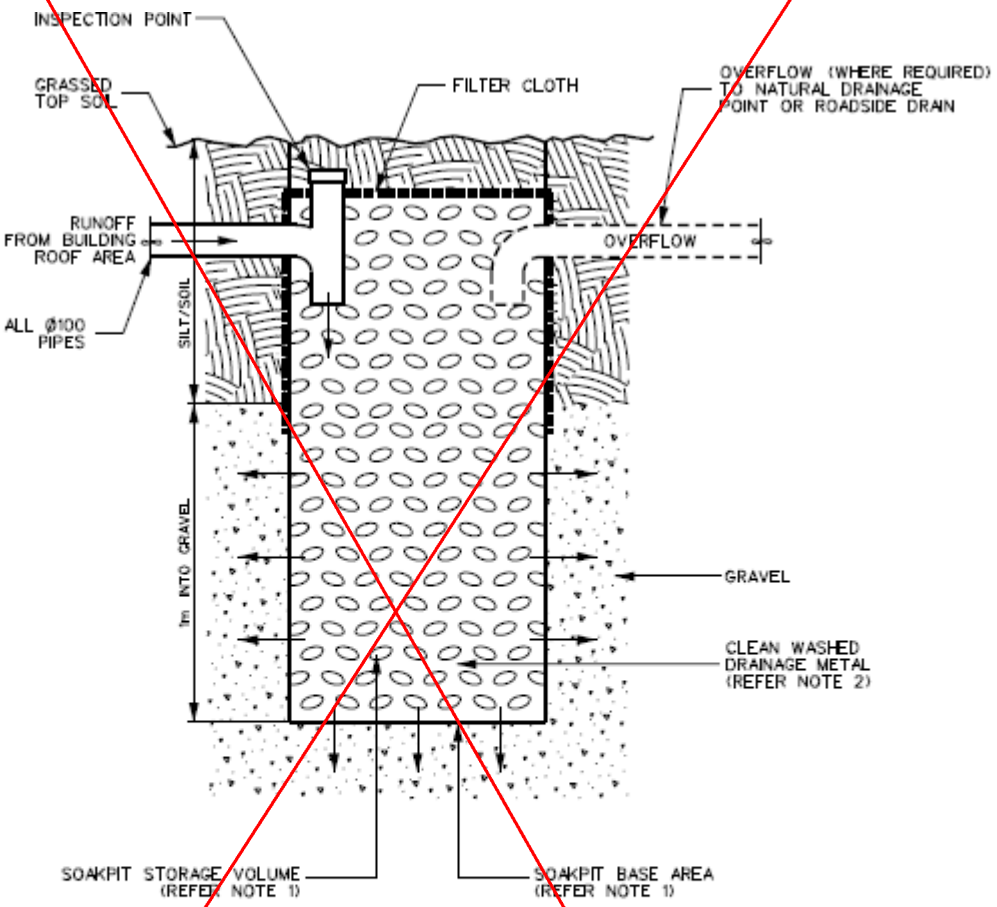

NOTES:

1. SOAK PIT SIZING - PROVIDE 1m² OF BASE AREA PER 100m² OF ROOF AREA AND 2m³ OF STORAGE VOLUME PER 100m² OF ROOF AREA (ALLOW 0.38 FACTOR FOR VOID SPACE) OR ALTERNATIVELY PROVIDE FULL DESIGN CALCULATIONS IN ACCORDANCE WITH VERIFICATION METHOD E1/VM1 SECTION 9.
2. CLEAN WASHED DRAINAGE METAL - TO BE EITHER TAILINGS 20mm-40mm, ROUNDS 40mm-65mm, BOULDERS 65mm-120mm, ROCKS 100mm-150mm OR SIMILAR.

REVISED During Processing 16/05/2025

HDC Approved Consent Document (In accordance with BA 2004, Sec. 49(1)) - Processed by : Carl Sherwood - BC No. 250126

Figure 7: Bedding and backfilling
Paragraphs 5.2.1, 5.3.1 and 5.4.1

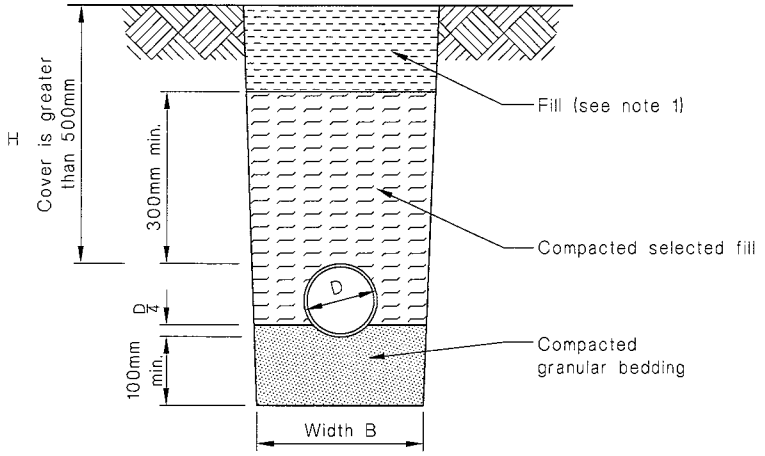

(a) Bedding type 'B' of NZS 7643
Cover greater than 500mm

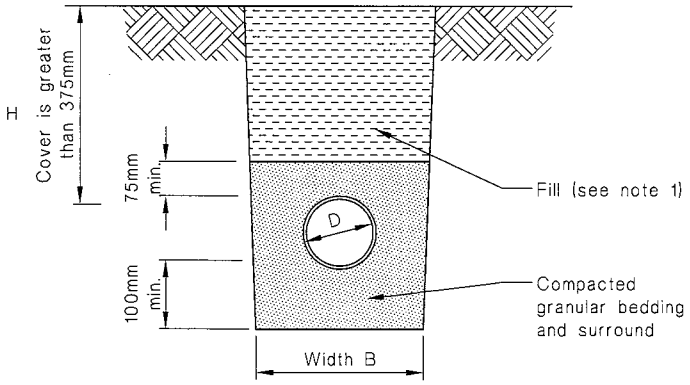

(b) Bedding type 'D' of NZS 7643
Cover greater than 375mm

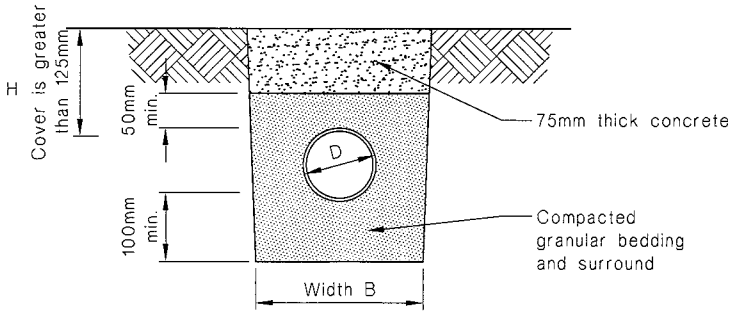

(c) Cover between 125mm and 375mm

NOTE:
1. Fill shall be:
-Ordinary fill where drains are located below gardens and open country.
-Compacted selected fill where the drains are located below residential driveways and similar areas subject to light traffic.

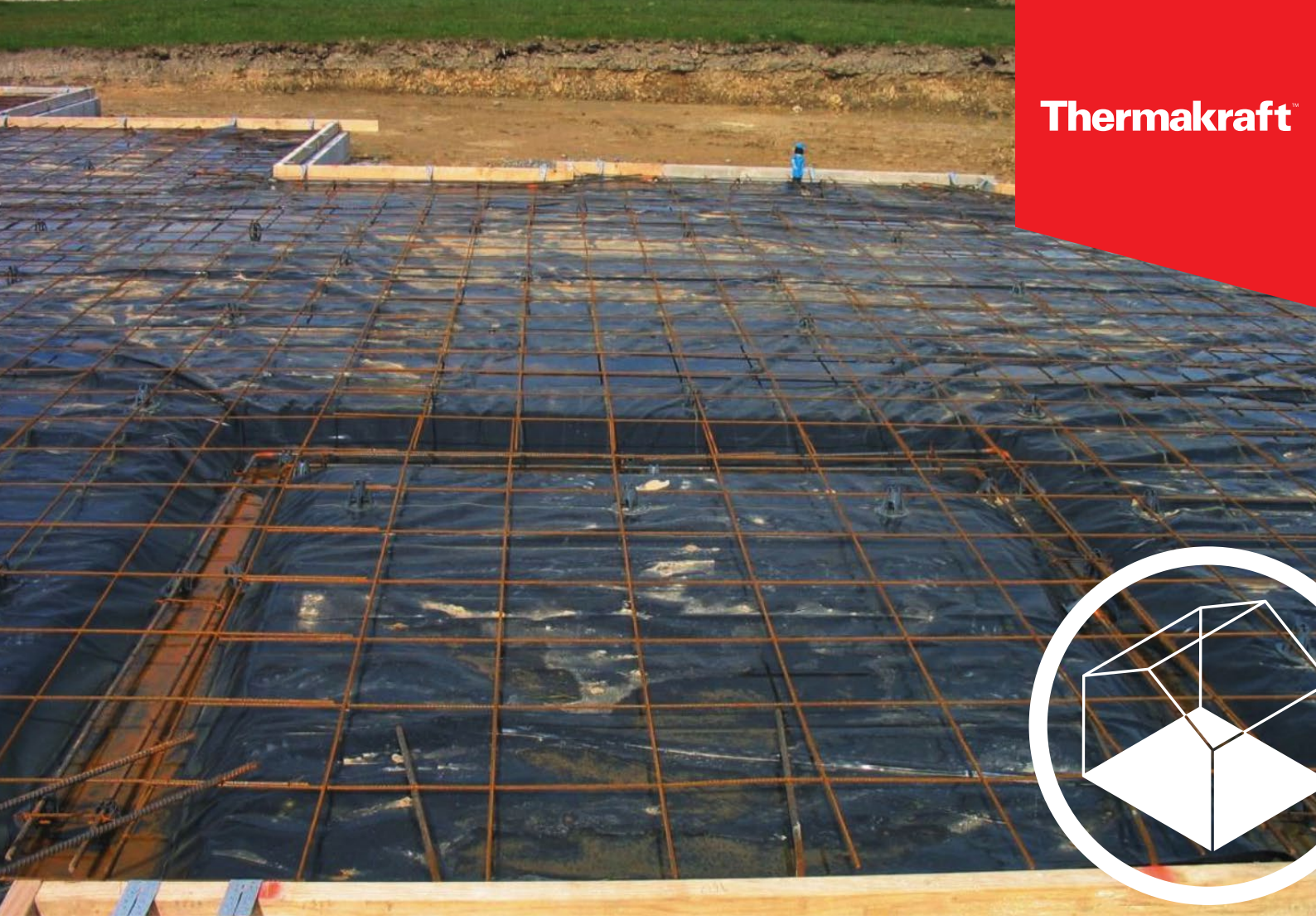

Thermakraft™

Product Data Sheet

THERMATHENE BLACK

Damp Proof Membrane (DPM)

Thermathene Black is a concrete underlay that is made from a tear and puncture resistant polyethylene film. It is commonly known as a Damp Proof Membrane (DPM).

Thermathene Black comes in two roll sizes:

Product Code	Width	Length	Coverage
PF250025	4000mm	25m	100m^2 coverage
PF250050	4000mm	50m	200m^2 coverage

Smarter products. Better buildings.

thermakraft.co.nz

HDC Approved Consent Document (In accordance with BA 2004, Sec. 49(1)) - Processed by : Carl Sherwood - BC No. 250126

Thermathene Black

Damp Proof Membrane (DPM)

Scope of Use

Thermathene Black intended for use as a damp-proof membrane separating concrete slab from ground soil. The product acts as a vapour barrier to stop ground moisture penetrating the concrete. Thermathene Black must be sealed with Thermakraft White General Purpose tape at the laps joints to form a complete vapour barrier.

General

- Unaffected by LOSP treated timber. However, LOSP treated timber must have sufficient time for the solvent chemical to flash off in well ventilated area. Recommended minimum 7 days.
- 4m x 25m [100m2] and 4m x 50m [200m^2] unfolded size.
- 250 Micron in thickness.

Limitations

- Maximum weather or UV exposure is 28 days.
- Cannot be used as a roof or wall underlay.

Compliance

Thermathene Black is an acceptable solution as per the requirements of the NZBC. Thermathene Black meets the requirements of NZBC 3604:2011 Clause 7.5.4.2, NZBC Acceptable Solutions E2/AS1, Table 23 and NZS 4229:2013 Clause 7.4 & 7.6.

When Thermathene Black is used and installed as a damp-proof membrane as per Thermakraft's literature, the product will meet or contribute to meeting the following provisions of the NZBC: Clause B2 Durability: Performance B2.3.1 (a), 50 years, Clause E2 External Moisture: Performance E2.3.3 & Clause F2 Hazardous Materials: Performance F2.3.1.

Product Warranty

Standard Thermakraft warranty applies. Refer to Thermakraft Warranty Statement for further details. This is available online at **thermakraft.co.nz** or call **0800 806 595.**

Thermakraft Limited / 0800 806 595

Smarter products. Better buildings.

thermakraft.co.nz

The recommendations contained in Thermakraft's literature are based on good building practice, but are not an exhaustive statement of all relevant information and are subject to any conditions contained in the Warranty. All product dimensions and performance claims are subject to any variation caused by normal manufacturing process and tolerances. Furthermore, as the successful performance of the relevant system depends on numerous factors outside the control of Thermakraft (for example quality of workmanship and design), Thermakraft shall not be liable for the recommendations in that literature and the performance of the Product, including its suitability for any purpose or ability to satisfy the relevant provisions of the Building Code, regulations and standards. Literature subject to change without notification. Latest documentation can be found on the website. E&OE.

Issue 4, November 2019

HDC Approved Consent Document (In accordance with BA 2004, Sec. 49(1)) - Processed by : Carl Sherwood - BC No. 250126

Thermakraft™



Installation Guide

THERMATHENE BLACK

Damp Proof Membrane (DPM)

Thermathene Black is a concrete underlay that is made from a tear and puncture resistant polyethylene film. It is commonly known as a Damp Proof Membrane (DPM).

Product usage

Thermathene Black is used as a concrete underlay and a moisture vapour barrier in areas where protection is required. The product is 250 microns in thickness and is coloured black. Thermathene Black may also be used under suspended subfloors as ground protection from rising damp.

Smarter products. Better buildings.
thermakraft.co.nz

HDC Approved Consent Document (In accordance with BA 2004, Sec. 49(1)) - Processed by : Carl Sherwood - BC No. 250126

Installation Guide

Application Method

- Thermathene Black should be installed in accordance with the requirements of NZS3604:2011 and must be laid on a properly prepared base as required by NZS3604:2011 Section 7.5.3 to 7.5.6.2.
- Thermathene Black must be laid in a continuous manner with all laps minimum 150mm, and penetrations to be taped with Thermakraft White General Purpose Tape.
- Thermathene Black should be laid in a neat fashion with a smooth surface, with as many of the ripples as possible eliminated.
- Thermathene Black must be inspected for any damage (tears or pentrations) prior to concrete placement. Any damage must be repaired with Thermakraft White General Purpose Tape, for any larger damage a patch of Thermathene Black maintaining a 150mm lap.
- Thermathene Black must not be left exposed for more than 28 days.
- Thermathene must be installed by a licensed building practitioner.
- Thermathene Black may also be used to cover ground areas under suspended timber floors to prevent the rise of dampness. Ensure that the site is clear of rubbish, sharp edges such as rocks or bricks. Slit and patch around jack studs or pipe work. All penetrations and joints must be taped.

Handling and Storage

Thermathene Black must be handled with care to prevent damage, the product must be stored under cover well away from direct moisture, rainfall contact and sunlight (UV). Care should be taken not stack other materials on top of the product.

The recommendations contained in Thermakraft's literature are based on good building practice, but are not an exhaustive statement of all relevant information and are subject to any conditions contained in the Warranty. All product dimensions and performance claims are subject to any variation caused by normal manufacturing process and tolerances. Furthermore, as the successful performance of the relevant system depends on numerous factors outside the control of Thermakraft (for example quality of workmanship and design), Thermakraft shall not be liable for the recommendations in that literature and the performance of the Product, including its suitability for any purpose or ability to satisfy the relevant provisions of the Building Code, regulations and standards. Literature subject to change without notification. Latest documentation can be found on the website. E&OE.

Issue 1, November 2019

HDC Approved Consent Document (In accordance with BA 2004, Sec. 49(1)) - Processed by : Carl Sherwood - BC No. 250126



Thermakraft™

Product Data Sheet

COVERTEK 405

Self-supporting roof and wall underlay

Covertek 405 is a premium synthetic roof and wall underlay designed as a means of managing condensation, water vapour transfer and water ingress. It is self-supporting, stable and shrink resistant and can be installed in applications where the roof pitch is 3° and above.

Covertek 405 comes in three roll sizes:

1250mm wide	20m long	25m² Coverage[2]
1250mm wide	40m long	50m² Coverage[2]
2550mm wide[1]	29.4m long	75m² Coverage[2]

Cut to Length available – Contact your Thermakraft Representative.

1 **Note:** made to order.
2 **Note:** m² is the roll size for actual coverage, allow for laps and joins.

Smarter products. Better buildings.
thermakraft.co.nz

CodeMark GM-CM30030

BRANZ Appraised
Appraisal No.743 [2019]

HDC Approved Consent Document (In accordance with BA 2004, Sec. 49(1)) - Processed by : Carl Sherwood - BC No. 250126

Covertek 405

Self-supporting roof and wall underlay

Scope of Use

Roof Application

- Suitable with masonry tile, metal tile and profiled metal roof cladding.
- Suitable for timber or steel framed buildings.
- Can be used on roofs up to and including NZS 3604 'Extra High' wind zones.
- Self-supporting - Refer to installation guide regarding underlay support requirements.
- Not suitable for roof pitch less than 3 degrees.
- Will provide temporary weather protection during construction (maximum 7 days), same day coverage recommended.

Wall Application

- Can be used with timber and steel framing, either direct or in conjunction with an 18mm minimum drained cavity.
- Suitable with absorbent (e.g. timber, brick or fibre cement) or non-absorbent wall claddings (e.g. metal or plastic).
- Suitable with masonry veneer in accordance with NZBC Acceptable Solution E2/AS1 or NASH Building Envelope Solutions.
- Is suitable for use in Wind Zones of NZS 3604 up to and including 'Very High' when used as a standalone flexible underlay, and 'Extra High' when used as a flexible underlay over a rigid wall underlay.
- Is suitable as an air barrier in unlined wall spaces.
- Will provide some temporary weather protection during construction (maximum 60 days for wall application).

General

- Is fire retardant.
- Unaffected by LOSP or other solvent based treated timber. However, LOSP or other solvent based treated timber must have sufficient time for the solvent chemical to flash off in a well ventilated area. Recommended minimum 7 days.
- Tear resistant and strong.

Limitations

- Must NOT be exposed to the weather or UV for more than 7 days as a roof underlay and 60 days as a wall underlay.
- Must not be used under translucent sheeting.

Compliance

Roof Application

- Can be used as an underlay within the scope limitations of NZBC Acceptable Solution E2/AS1, Paragraph 1.1, with regards to building height and floor plan area.
- Or within the scope limitations of NASH Building Envelope Solutions, Paragraph 1.1 for steel framed buildings.
- Refer BRANZ Appraisal No 743 (2019) and CodeMark Certificate GM-CM30030 for full details.
- CodeMark Certification only covers roof application.

Wall Application

- Can be used as a wall underlay within the scope limitations of NZBC Acceptable Solution E2/AS1, Paragraph 1.1, with regards to building height andvfloor plan area.
- Or within the scope limitations of NASH Building Envelope Solutions, Paragraph 1.1 for steel framed buildings.
- Refer to BRANZ Appraisal No 743 (2019) for full details.

Flammability Index

Thermakraft Covertek 405 Underlay has an AS 1530 Part 2 Flammability Index of not greater than 5 and therefore meets the requirements of NZBC Acceptable Solutions C/AS2 to C/AS6, Paragraph 4.17.8 b), for the surface finish requirements of suspended flexible fabric used as an underlay to exterior cladding that is exposed to view in occupied spaces.

Durability

Meets the Performance Requirements of NZBC Clauses B2, Durability (B2.3.1 (a) 50 years, B2.3.1 (b) 15 years and B2.3.2), C3 Fire affecting areas beyond the fire source C3.4 (c) E2 External Moisture, and F2 Hazardous Building Materials F2.3.1/C, providing:

- It is not damaged.
- Is installed in accordance with instructions.
- Is not left exposed for more than 7 days (roof), same day coverage recommended.
- Is not left exposed for more than 60 days (wall)
- Is installed by or under guidance of Licensed Building Practitioners.
- Is compatible with cladding system used.*

* **Note:** specifiers and product users must test for roof cladding system compatibility with the underlay before installation.

HDC Approved Consent Document (In accordance with BA 2004, Sec. 49(1)) - Processed by : Carl Sherwood - BC No. 250126

Covertek 405

Self-supporting roof and wall underlay

Control of Condensation

In climatic regions where condensation risks are high, such as cold or high humidity areas, care needs to be taken in specifying the correct design and installation to prevent moisture build-up in the roof cavities.

Factors which adversely affect the condensation risk in roofing systems include:

- Humid, and/or cold climatic regions.
- Warm/Skillion roof construction.
- Low roof cavity air volume and restricted air movement.
- Omitting Vapour Control Layers.
- Occupancy activities which have high moisture loading on conditioned spaces.
- Ceiling penetrations and entry of warm air into roof cavities.
- Low pitched roof.
- Bulk insulation.
- Building structures ability to naturally dry construction moisture.

Skillion and Warm Roof Construction are particularly sensitive to moisture accumulation and the design and installation of roof construction needs to take into account the higher condensation risks. Refer to the NZ Metal Roof and Wall Cladding Code of Practice (COP) for details.

For passive ventilation of the roof space, it is recommended that all roof underlays are terminated at the ridge, and if not it should be slit or slotted to allow for passive ventilation. For further information refer to the NZ Metal Roof and Wall Cladding COP.

Property Performance

NZBC E2/AS1 Table 23 (NZS2295) Wall Underlay Properties	Absorbency	Vapour Resistance	pH of Extract	Shrinkage	Water Resistance	Air Resistance
Property Performance Requirement	≥ 150gsm	≤ 0.5 MN.s/g	≥ 5.5 and ≤ 8	≤ 0.5%	≥ 100mm	≥ 0.1 MN.s/m3
Property Performance	Pass	Pass	Pass	Pass	Pass	Pass*

* **Note:** Can be used as an air barrier.

Product Warranty

Standard Thermakraft warranty applies. Refer to Thermakraft Warranty Statement for further details. This is available online at **thermakraft.co.nz** or call **0800 806 595.**

Thermakraft Limited / 0800 806 595

Smarter products. Better buildings.

thermakraft.co.nz

CodeMark GM-CM30030

BRANZ Appraised Appraisal No.743 [2019]

The recommendations contained in Thermakraft's literature are based on good building practice, but are not an exhaustive statement of all relevant information and are subject to any conditions contained in the Warranty. All product dimensions and performance claims are subject to any variation caused by normal manufacturing process and tolerances. Furthermore, as the successful performance of the relevant system depends on numerous factors outside the control of Thermakraft (for example quality of workmanship and design), Thermakraft shall not be liable for the recommendations in that literature and the performance of the Product, including its suitability for any purpose or ability to satisfy the relevant provisions of the Building Code, regulations and standards. Literature subject to change without notification. Latest documentation can be found on the website. E&OE

Issue 5, September 2020

HDC Approved Consent Document (In accordance with BA 2004, Sec. 49(1)) - Processed by : Carl Sherwood - BC No. 250126

Roof Safe Mesh Galvanised Steel

Product Technical Statement

SUMMARY OF FEATURES

- A welded galvanised steel wire mesh used as a support for roofing underlays and insulation. It also provides a safety net against falls during initial roof installation and for ongoing maintenance work.
- Suitable for both timber and steel structures.
- Complies with Safety Mesh Standard AS/NZS 4389: 2015.

TECHNICAL INFORMATION

Product Description

Kiwimesh Roof Safe Mesh consists of a welded, mild steel wire mesh with longitudinal wires spaced at 150mm centres and cross wires spaced at 300mm centres.

It is comprised of a 2.0mm diameter galvanised wire with a tensile strength exceeding 450mpa. T

Applications

- Provides fall-through protection during roof installation and ongoing maintenance.
- Suitable for use on timber and steel framing.

Technical Data

Complies with Safety Mesh Standard AS/NZS 4389: 2015:

Limitations

Not to be used for access or as a working platform.

Handling & Storage

Rolls must be stored on end, under cover and protected from moisture. Do not double stack or use to support other materials. Rolls must not be stored on concrete floors for long periods.

Size Range Available

HDC Approved Consent Document (In accordance with BA 2004, Sec. 49(1)) - Processed by : Carl Sherwood - BC No. 250126

Fixing instructions

Before installation check with the local code of practice for safe work on roofs.

Transverse wires shall be on top of the longitudinal wires.

All longitudinal wires are passed around anchor points with the tail of each wire being twisted four times around the main portion of the same wire.

End joints in wire, two transverse wires are placed together, the longitudinal tail wires (approx 300mm long) are tied around each other, one being twisted four times around the main portion of the same wire, the other longitudinal wire twisted once around the main portion of the same wire then four times around two transverse wires.

Side laps (i) For purlin spacing/span less than 1200mm, the runs of mesh shall be side-lapped by a minimum of one mesh spacing (150mm). (ii) For purlin spacing/span between 1200-2200mm, the runs of mesh shall be side-lapped by a minimum of one mesh spacing (150mm). Side laps shall be secured with ring fasteners fabricated from minimum 1.90mm diameter wire, or equivalent, fitted at maximum 900mm centres between each purlin on one side of the lap. (iii) For purlin spacing/span greater than 2200mm, the runs of mesh shall be side-lapped by a minimum of two mesh spacing (300mm). Side laps shall be secured with ring fasteners fabricated from minimum 1.90mm diameter wire, or equivalent, fitted at maximum 600mm centres between purlin/span on both sides of the lap.

Tautness. Mesh shall be pulled taut to ensure only natural sag between each purlin or roof member.

End joints

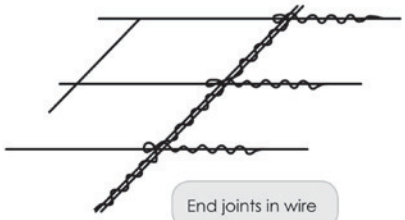

End joints in wire

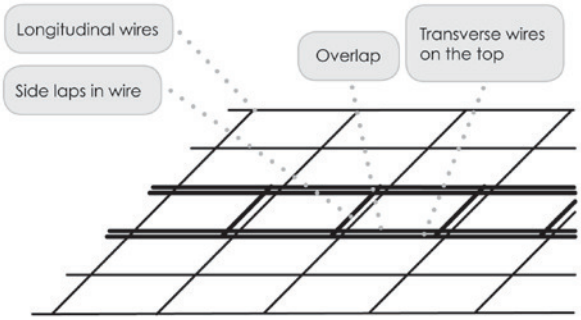

Steel and timber purlins

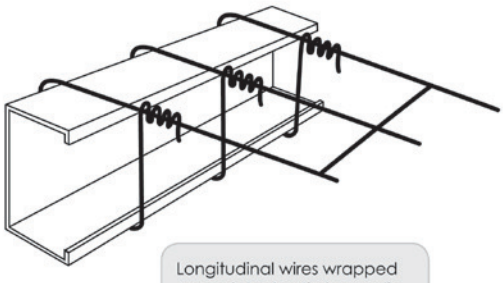

Longitudinal wires wrapped around steel or timber purlin.

Steel purlins

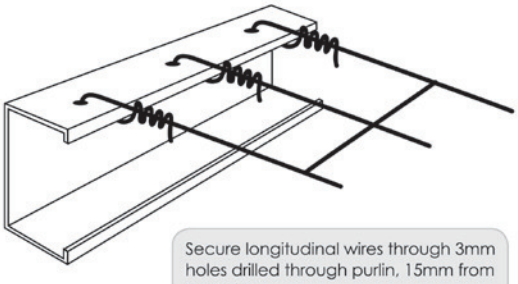

Secure longitudinal wires through 3mm holes drilled through purlin, 15mm from the edge.

Timber purlins

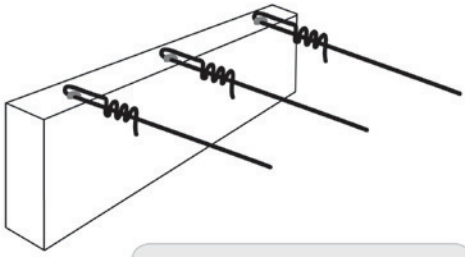

Secure longitudinal wire in position with 40mm long x 3.15mm diameter staples.

kiwimesh

PAUL Industries

HDC Approved Consent Document (In accordance with BA 2004, Sec. 49(1)) - Processed by : Carl Sherwood - BC No. 250126

Wall Sheeting

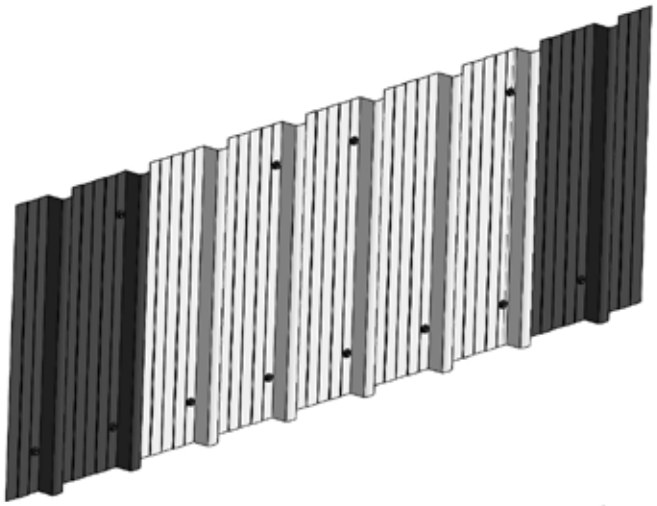

WS1

6 Rib

The cladding for wall sheeting shall be fixed with Cladding Hex Tek #10x16 with neo washers to all walls. On middle girts tek beside every join then miss one, place two. On bottom / top girts tek every pan.

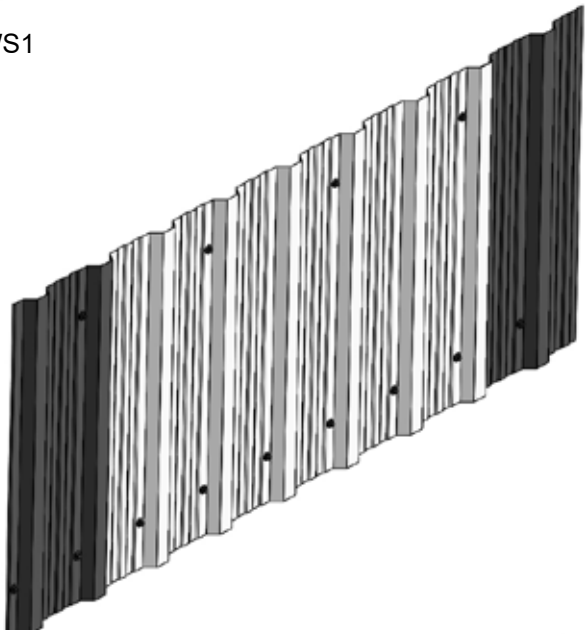

WS2

7 Rib

The cladding for wall sheeting shall be fixed with Cladding Hex Tek #10x16 with neo washers to all walls. On middle girts tek beside every second rib. On bottom / top girts tek every pan.

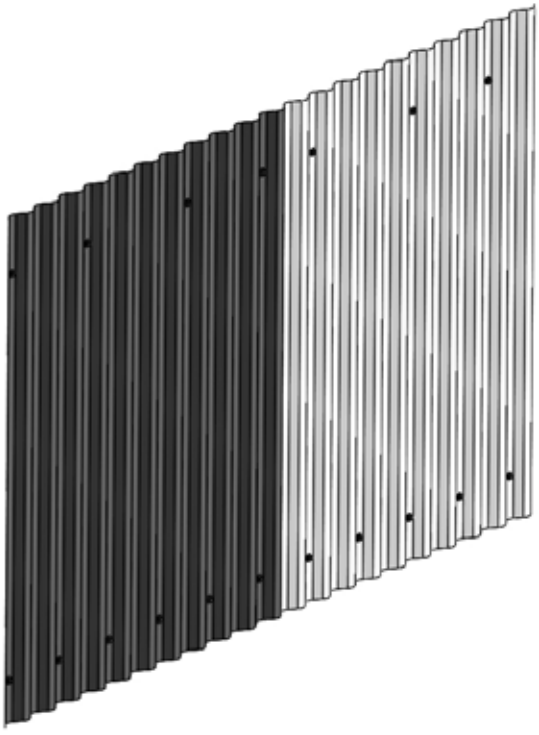

WS3

Corrugate

The cladding for wall sheeting shall be fixed with Cladding Hex Tek #10x16 with neo washers to all walls. On middle girts tek beside every join then miss two, tek one, miss three, tek one. On bottom / top girts tek every second pan.

HDC Approved Consent Document (In accordance with BA 2004, Sec. 49(1)) - Processed by : Carl Sherwood - BC No. 250126

Roof Sheeting

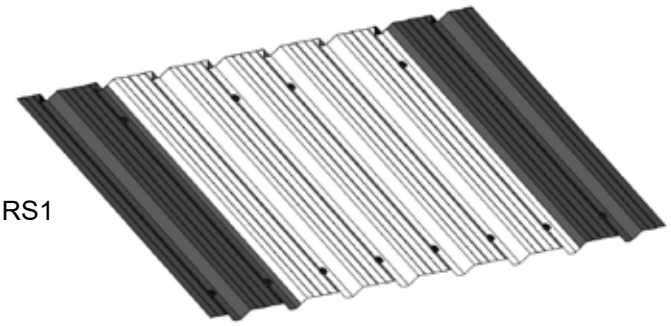

RS1

6 Rib

The cladding for roof sheeting shall be fixed using Cladding Hex Tek #12x45 to all purlins, except the ridge purlin, and extend 50mm into the gutter.

On middle purlins tek rib on every join then miss one, place two. On gutter purlin tek every rib.

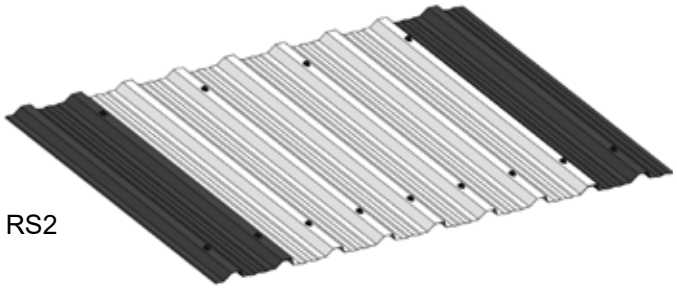

RS2

7 Rib

The cladding for roof sheeting shall be fixed with Cladding Hex Tek #12x35 to all purlins, except the ridge purlin, and extend 50mm into the gutter.

On middle purlins tek every second rib. On gutter purlins tek every rib.

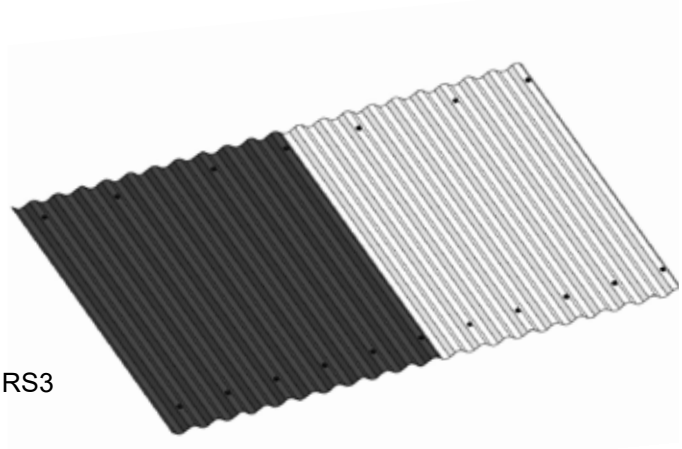

RS3

Corrugate

The cladding for roof sheeting shall be fixed with Cladding Hex Tek #12x35 to all purlins, except the ridge purlin, and extend 50mm into the gutter.

On middle purlins tek on rib at every join then miss two, tek one, miss three, tek one. On gutter purlins tek every second rib.

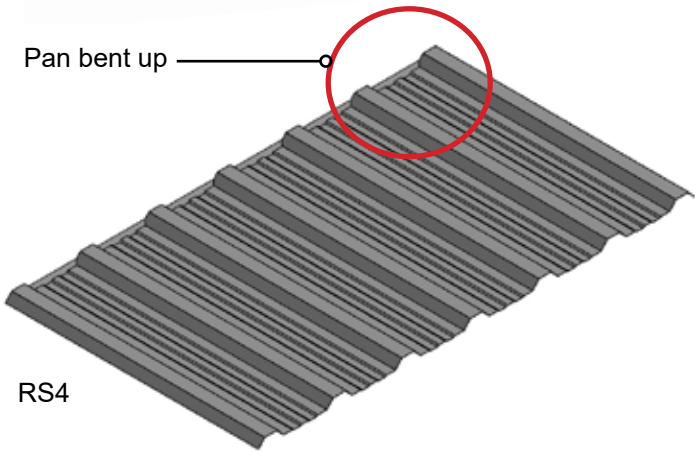

RS4

Pan Detail to Ridge

Roof Sheeting to have pans bent up, as shown, to ridge end. Use a crescent if no suitable bending tool is available.

HDC Approved Consent Document (In accordance with BA 2004, Sec. 49(1)) - Processed by : Carl Sherwood - BC No. 250126

Translucent Sheet Fixing Details

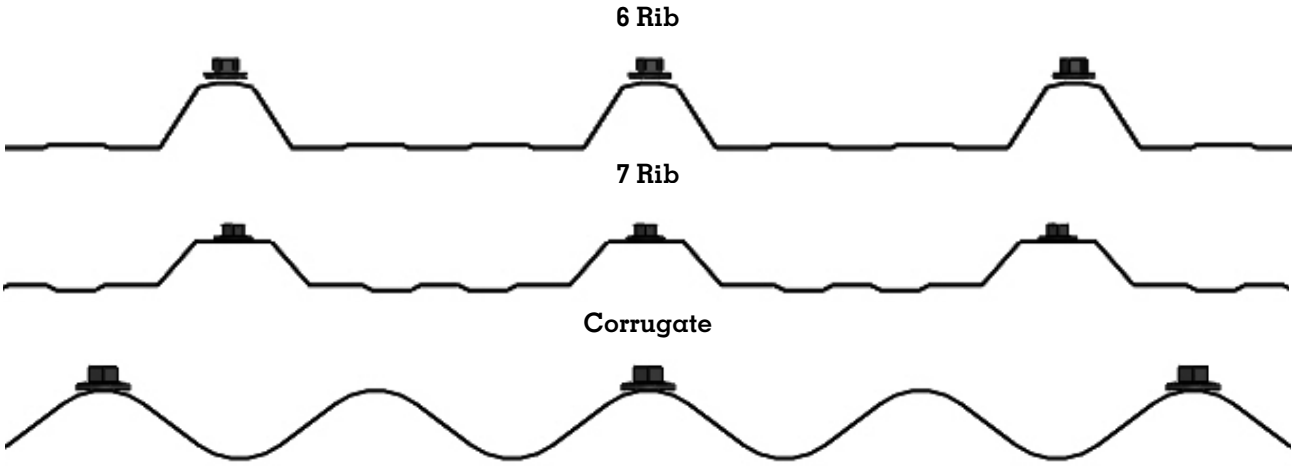

Where wire safety mesh is incorporated under the translucent roof sheeting and where the safety mesh passes over the supporting purlin directly under the fiberglass sheeting, a Protective Purlin Strip (flat fiberglass strip of minimum 1.1mm thickness) must be installed between the translucent sheeting and the safety mesh.

Inseal foam infill to be installed on top of the translucent sheet at the ridge top and ridge fastened over this to provide additional weather sealing.

Site Laps

Each individual translucent sheet is manufactured to overlap and be supported by the adjacent roof or wall cladding sheet.

Fastening Procedure

- In roofing applications, fixings shall be installed through the crest of any profile. Due to the larger expansion and contraction rates of translucent sheeting, oversized fixing holes must be predrilled. Installers must ensure that the fastener is located in the centre of the oversize hole or the benefit of the larger hole is lost. The recommended calculation to ensure the correct hole size used is - 0.75mm per lineal metre, plus the shank size of the fastener. This should be: 7.84 (sheet length) x 0.75=5.88 + 4.5mm (shank size of translucent tek) = 10.38mm 10.5mm holes to be drilled for a 15m span building
- Install screws into translucent sheet in the same manner as metal
- When completed, remove fixings from translucent sheet.
- Using the existing screw hole as a guide, re-drill over sizing the hole
- Re-install the fixing screw. (Note how the screw is centrally located in the hole.)
- It is important not to over tighten the screw putting undue pressure on the translucent sheet. Use only enough pressure that that the translucent fixing screw seal is contoured to the shape of the rib but the rib retains its shape without any sign of buckling.

Note – Top washer is too tight, bottom washer is ok.





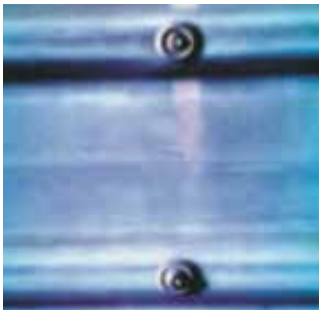

HDC Approved Consent Document (In accordance with BA 2004, Sec. 49(1)) - Processed by : Carl Sherwood - BC No. 250126

Translucent Sheet Fixing Details contd.

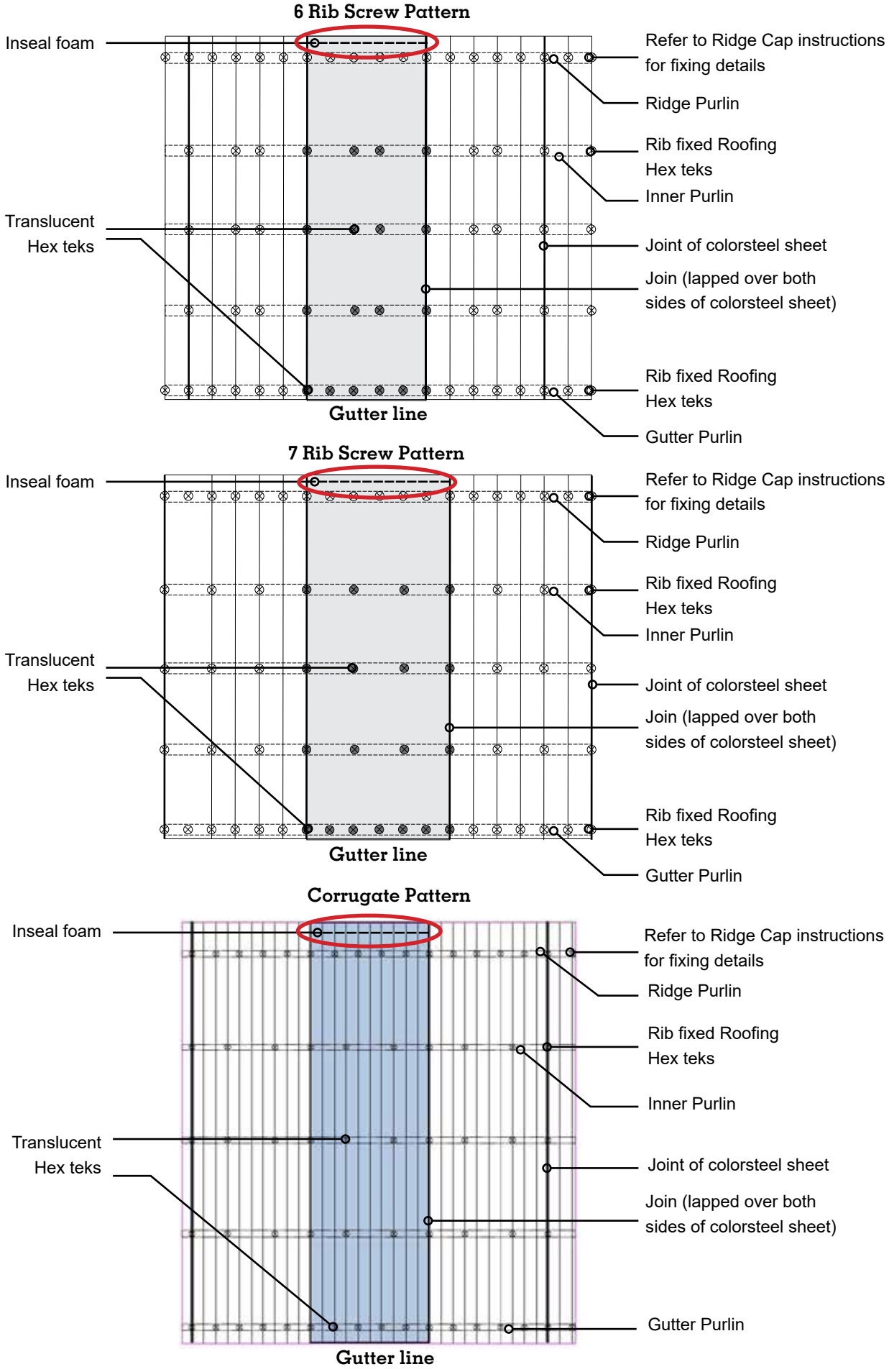

HDC Approved Consent Document (In accordance with BA 2004, Sec. 49(1)) - Processed by : Carl Sherwood - BC No. 250126

Gable Range
Producer Statement and Structural Details
(IL1 Non-Habitable, Unlined)

INDEX:

1	Contents
2	Producer Statement
3	Specifications
4	Durability Statement
5	Site Plan
6-11	Engineering Tables
12	Foundation Details SD-F01
13	Foundation Details SD-F02
14	Frame Details SD-P01
15	Major Openings SD-M01
16	Minor Door Openings SD-M05
17	Bracing Details
18	Flashing Details
19	Flashing Detail SD-E01

CLIENT:

Don Campbell
7 Swindon Lane
Amberley
CAN
7410

BUILDING:

System Ref Code:	JH.309 (v3.3.2.15)
Location:	Lat: -43.146309 Lng: 172.730994
Wind Speed: Vdes Θ:	34.22 m/s
Snow Loading:	Sg = 0.9 kPa
Span:	4.000m
Length:	7.000m
Knee Height:	2.400m
Bay Size:	2x3.500m
Roof Pitch:	15°
Roofing Sheet:	7-Rib 0.35mm
Cladding Sheet:	7-Rib 0.35mm
Downpipe Type:	80mm Coloursteel
Floor Type:	Concrete Slab
Area:	Total 28.0m²

NOTES :

1 - Contractor to confirm all dimensions on site at time of construction
2 - These drawings must not be reproduced without express permission from Spanbild New Zealand Limited.

TOTALSPAN
A Division of Spanbild New Zealand Ltd
112 Waterloo Road, Hornby
P.O.Box 11-013, Christchurch Details

SPANBILD
DESIGN. MANUFACTURE. BUILD.

PRODUCER STATEMENT – PS1
DESIGN

BUILDING CODE CLAUSE(S): B1 **JOB NUMBER:** JH.309
ISSUED BY: Spanbild NZ Ltd
(Engineering Design Firm)
TO: Totalspan North Canterbury
(Owner/Developer)
TO BE SUPPLIED TO: Hurunui District Council
(Building Consent Authority)
IN RESPECT OF: 4.000m span x 7.000m length; IL1 portal building; DL=50yrs
(Description of Building Work)
AT: 7 Swindon Lane, Amberley, 7410, CAN
(Address, Town/City)
LEGAL DESCRIPTION: **N/A**

We have been engaged by the owner/developer referred to above to provide *(Extent of Engagement)*:
Structural Design as shown on sheets 1, 2, 5-16
in respect of the requirements of the Clause(s) of the Building Code specified above for all, as specified in the Schedule, of the proposed building work.

The design carried out by us has been prepared in accordance with:

- ✔Compliance documents issued by the Ministry of Business, Innovation & Employment *(Verification method/acceptable solution)* B1/VM1, B1/VM4 and/or;
- Alternative solution as per the attached Schedule.

The proposed building work covered by this producer statement is described on the drawings specified in the Schedule, together with the specification, and other documents set out in the Schedule.

On behalf of the Engineering Design Firm, and subject to:

- Site verification of the following design assumptions:
- All proprietary products meeting their performance specification requirements;

I believe on reasonable grounds that:

- the building, if constructed in accordance with the drawings, specifications, and other documents provided or listed in the Schedule, will comply with the relevant provisions of the Building Code and that;
- the persons who have undertaken the design have the necessary competency to do so.

~~I recommend the **N/A** level of **construction monitoring.**~~

I, *(Name of Engineering Design Professional)* Ryan Moreau , am:

- ✔CPEng number 1013731

and hold the following qualifications BE(Hon), CPEng, CMEngNZ

The Engineering Design Firm holds a current policy of Professional Indemnity Insurance no less than $200,000
The Engineering Design Firm is a member of ACE New Zealand.

SIGNED BY *(Name of Engineering Design Professional)*: Ryan Moreau

ON BEHALF OF *(Engineering Design Firm)*: Spanbild NZ Ltd Date:14-04-2025

Note: This statement has been prepared solely for the Building Consent Authority named above and shall not be relied upon by any other person or entity. Any liability in relation to this statement accrues to the Engineering Design Firm only. As a condition of reliance on this statement, the Building Consent Authority accepts that the total maximum amount of liability of any kind arising from this statement and all other statements provided to the Building Consent Authority in relation to this building work, whether in tort or otherwise, is limited to the sum of $200,000.

This form is to accompany **Form 2 of the Building (Forms) Regulations 2004** for the application of a Building Consent.

SCHEDULE TO PS1

The proposed building work covered by this producer statement is described on the drawings with project reference and sheet numbers on the PS1

The specifications, durability statement and maintenance requirements are set out in the drawings.

Alternative Solutions apply for areas that the potential for liquefaction or lateral spread has been identified as it is outside B1/VM4. The alternative solutions are MBIE guidance documents "Planning and engineering guidance for potentially liquefaction prone land" and "Repairing and re-building houses affected by the Canterbury Earthquakes"

The foundations require suitable soils. This IL1 foundation (generally unlined) has been designed for;

- Geotechnical Ultimate Bearing Capacity of 225 kPa,
- Where there is no potential for liquefaction or lateral spread or
- Liquefaction Vulnerability where liquefaction damage is unlikely (very low or low liquefaction vulnerability),
- Non-expansive soils.

- Indications of local instability,
- Foundations closer than 3 x height of a bank plus 0.6 m measured from the foot of the bank, and the length of the flat at the base of the bank is a minimum of 4 times the height of the bank,
- Slope steeper than 5 degrees away from the building platform.
- Buried organic topsoil, peat, soft clays, buried services or expansive clays, any fill that does not have a certificate of suitability issued in accordance with NZS 4431

TOTALSPAN®
STEEL BUILDINGS

Project Ref: JH.309

© Copyright 2017 Spanbild NZ Ltd. All rights reserved.

Don Campbell
7 Swindon Lane
Amberley
7410
021 1521186

Gable Range - Design

Producer Statement

SPECIFICATIONS

GENERAL NOTES

1. IMPORTANT DESIGN LIMITATIONS

1.1. Design limitations apply to any item or alteration not specifically stated or clearly represented within the scope of these engineering specifications. This is a CAD drawing which must not be altered by manual methods, exceptions to this are:

1.1.1. The documentation clearly states where "generic" items can be crossed out, or the applicable detail circled to provide clarity.

1.1.2. Additional specific design has been carried out by a CPENG engineer with a PS1 supplied covering "part" design works for any ammedment/alterations. Alternative/Additional drawings shall be supplied or these specifications must be clearly marked up in red pen and accompanied by the PS1 engineer's signature on each drawing altered which is covered by the additional specific design, as above.

1.1.3. A letter has been supplied in writing, signed by the original engineer(s) covering "minor" ammedments/alterations or clarifications to varying interpretations of the design drawings.

1.2. Habitable/Lined Buildings are not covered within this scope of work.

2. GENERAL

2.1. All work shall conform to the New Zealand Building Code

2.2. B2 Durability shall be covered by respective product/manufacturers durability statements

3. LOADINGS

3.1. Buildings are designed to AS/NZS 1170

3.1.1. Refer Schedule for Windspeed, Vdesθ in m/s.

3.1.2. Refer Schedule for Ground Snow Load if applicable in kPa.

3.1.3. The roofing is not designed for point loads of 1.1kN, these are Surfaces (including transparent surface) over which supports (e.g., boards or ladders) are required to be laid to support actions incidental to maintenance (e.g., people).

3.1.4. Earthquake loads, except for "near fault" locations due to the light-weight structure are not critical for unlined, Importance Level 1 & 2 standard structures with cladding as specified below only.

3.1.5. Habitable/Lined or Importance Level 3 and greater structures require specific design engineering in addition to this specification covering the scope of works. (Importance Level 2 structures have been designed to resist "structural damage" deflections only).

3.1.6. Any loads exceeding the above shall require specific design engineering in addition to this specification covering the scope of works.

4. FOUNDATIONS

4.1. Ground shall have a safe bearing capacity of at least 75kPa (225kPa Ultimate).

4.1.1. This is achieved by meeting "good ground", safe bearing capacity of at least 100kPa in accordance with NZS 3604 (i.e. exceeds the above) OR;

4.1.2. Safe bearing capacity of at least 75kPa by Site Specific Geo-Technical Report (as NZS 3604 has no means of determining a minimum safe bearing of 75kPa).

5. CONCRETE

5.1. Designed to NZS 3101

5.2. Remove vegetation and loose material from the building footprint, backfill with compacted hard-fill if required and lay sand blinding to the underside of the concrete slab. Ensure the surface of the slab will be at least 100mm above the highest level of cleared ground around the slab.

5.3. Concrete shall have a maximum aggregate size of 20mm and minimum 20MPa compression strength at 28 days.

5.4. Refer Foundation Details for further details.

5.5. Lesser Ductile Mesh is allowed to be used for Importance Level 1 structures only

5.5.1. Refer NZS 3101 Clause 5.3.2.7 (a)

6. STEELWORK & COMPONENTS

6.1. Boxed Sections

6.1.1. Shall be fixed through flange centres within 100mm from the end and at @ 600mm centres max. (+50mm tolerance) using #10 Self-Drilling Screws. Excludes exterior flanges of Girts & Purlins (as cladding teks provide fastening).

6.2. All Steelwork & Components shall (where applicable) conform to:

6.2.1. AS/NZS 4600 - Cold-formed steel structures

6.2.2. AS/NZS 1252 - High strength steel bolts with associated nuts and ...

6.2.3. AS/NZS 1365 - Tolerances for flat-rolled steel products

6.2.4. AS/NZS 4505:2013 - Garage doors and other large access doors

6.2.5. AS 1110 - ISO metric hexagon bolts and screws

6.2.6. AS 1112 - ISO metric hexagon nuts...

6.2.7. AS 1397 - Continuous hot-dip metallic coated steel sheet and strip

6.2.8. AS 1580 - Paints and related materials - Methods of test

6.2.9. AS 3566 - Self-drilling screws for the building and construction industries

6.2.10. AS 4291.1 - Mechanical properties of fasteners made of carbon steel and ...

6.2.11. IFI-114(Imperial) / IFI-505(Metric) - Break Mandrel Blind Rivets

7. CLADDING

7.1. Roof and Wall Sheeting shall be 0.35 - 0.55 B.M.T, AZ150 Coating, G550 Steel only. Alternative claddings (excluding glass reinforced panel), require an independent specific design certificate for the scope of work.

7.2. Fixing pattern as per E2/AS1 or NZ MRM - NZ Metal Roof and Wall Cladding Code of Practice.

7.3. Flashings shall be fixed as per manufacturers recommendations/instructions.

8. SERVICES

8.1. Penetrations through framing members

8.1.1. Typical hole diameter(s) shall not exceed 29mm (1 ⅛ inch)

8.1.1.1. A single 44mm (1 ¾ inch) hole per C150, C250 or C300 section only is allowed to accommodate an up to 40mm waste water pipe

8.1.2. Distance between holes along the section shall be no less than 1000mm

8.1.3. Holes shall be located:

8.1.3.1. Central in the web, (within the centre 1/3 of the web depth)

8.1.3.2. At least 200mm from the end of a member

8.1.4. Rubber grommets to be applied to un-swaged service holes

8.1.5. Larger and more frequently spaced holes are allowed, however please consult with an engineer first for written approval to ensure compliance with AS/NZS 4600.

TOTALSPAN®
STEEL BUILDINGS

Project Ref: JH.309

© Copyright 2017 Spanbild NZ Ltd. All rights reserved.

Don Campbell
7 Swindon Lane
Amberley
7410
021 1521186

Gable Range - Design

Specifications

MANUFACTURERS STATEMENT - DURABILITY

Cladding

To satisfy the requirements of Clause B2:"Durability" of the NZBC and to ensure the cladding material meets a 15-year durability life and a 50 year intended working life (design life), the following requirements must be followed:

Cladding Range of Product and Use

- Coating Type: Zinc/Aluminium & Painted (Coloured Steel).
- Steel thickness range: 0.35mm - 0.55mm BMT
- Steel grade range: G300 - G550
- Application: Standard Totalspan Roof and Wall Cladding
- Profile: Totalspan 7 Rib, Totalspan 6 Rib, Totalspan Corrugate

Requirements

- Fixing and installation of the cladding must be done exactly in accordance with the manufacturer's instructions and specifications.
- Normal maintenance must be regularly carried out on the exterior surface of the cladding and visible internal surfaces of the cladding.The following guide must be followed to ensure the durability requirements are met.

Normal Maintenance

- Normal Maintenance to be completed in accordance with Durability - Acceptable Solution B2/AS 2.1.3
- Corrosion Zones C1 and C2 (Reference SNZ TS 3404:2018, Durability requirements for steel structures and components, corrosivity zone maps, Figure 1 – 7, page 10 – 16)

  Rain-washing only required on exposed (open to airborne salts and rain wetting) material. Sheltered (open to airborne salts, but not rain washed) or protected areas such as under spouting, top-cladding sheets and tops of doors and underside of Awnings and Garaports require washing every 3 months.

- Corrosion Zones C3 and C4 (Reference SNZ TS 3404:2018, Durability requirements for steel structures and components, corrosivity zone maps, Figure 1 – 7, page 10 – 16)

  Rain-washing only required on exposed (open to airborne salts and rain wetting) areas. Sheltered (open to airborne salts, but not rain washed) and protected areas such as under spouting, top cladding and tops of doors and underside of Awnings and Garaports require washing down every month and whenever corrosive salts are present.

Extended Maintenance, Painting or Repainting

Extended Durability

Once the metallic coating or the paint system has weathered away, signs of red rust for bare material or signs of the metallic coating for painted material, painting of the entire surface is required to extend the life of the cladding product. Paint manufacturers recommendations are to be followed for surface preparation and paint type to be used.

Evident Corrosion

- Areas that show signs of white or red rust/corrosion (typically in unwashed areas) require cleaning back with a stiff brush and cleaner to remove all dust, surface contaminants and corrosion products and present a sound substrate for painting. Priming of the surface and application of two coats of paint as per the Paint Manufacturer's recommendations is then required.
- Particular attention needs to be paid to laps (side, end, flashing etc) where earlier corrosion may start due to moisture and dirt entrapment.

  If evident corrosion is not treated quickly rapid deterioration of the sheet may occur which could result in perforation. At this stage replacement of the affected sheet is the best option.

Steel Framing

To satisfy the requirements of Clause B2:"Durability" of the NZBC and to ensure the structural framing material meets a 25-year durability for carports and a 50-year durability for all other buildings, the following requirements must be followed:

Steęl Framing Range of Product and Use

- Coating Type: Galvanised
- Steel thickness range: 0.55mm – 3.0mm BMT
- Steel grade range: G300 – G550
- Application: Standard Totalspan Purlins, Girts, Portal Frames, Door Jambs, Wall Uprights, Bridging, Posts

Profile:
C Sections – C80 to C300
Z Sections – 100x53, 150x65
Tophat Sections – 100x163, 120x170, 150x183
Square Hollow Sections - 65x65, 75x75

Requirements

- Regular inspections of the steel work and maintenance at the first signs of a problem will extend the durability of the sections.
  Where sections are exposed (open to airborne salts and rain wetting) or sheltered (open to airborne salts but not rain washed), or located in salt marine, corrosive industrial or unusually high corrosive enviromentsthe below Normal Maintenance must be adhered to. Please contact your local Totalspan branch for specialist advice if unsure requirements.
  This also applies to all Steelwork that is exposed to the wind but is protected from the rain located in an open sided structure such as carports, awnings or structures closed in on one side only.
  Maintenance is necessary when the Galvanised coating ceases to provide sacrificial protection to the steel base, or where the appearance is no longer aesthetically acceptable. At the first sign of corrosion or rust staining, the surface should be treated and painted with an appropriate coating system. All maintenance should be carried out in accordance with AS/NZS 2312:2002 (Incorporating Amendment No. 1) [c] and New Zealand Steelwork Corrosion Coatings Guide (HERA Report R4-133) [d].

Normal Maintenance

- Normal Maintenance to be completed in accordance with Durability - Acceptable Solution B2/AS 2.1.3

-Corrosion Zones C1 and C2 (Reference SNZ TS 3404:2018, Durability requirements for steel structures and components, corrosivity zone maps, Figure 1 – 7, page 10 – 16)

Rain-washing only required on exposed (open to airborne salts and rain wetting) sections.
Sheltered (open to airborne salts, but not rain washed)sections require washing every 3 months. All other materials should be inspected at the time of washing and if required, cleaned of any contaminants.

-Corrosion Zones C3 and C4 (Reference SNZ TS 3404:2018, Durability requirements for steel structures and components, corrosivity zone maps, Figure 1 – 7, page 10 – 16)

Rain-washing only required on exposed (open to airborne salts and rain wetting) sections
Sheltered (open to airborne salts, but not rain washed)sections require washing down every month and whenever corrosive salts are present. All other materials should be inspected at the time of washing and if required, cleaned of any contaminants.

Manufacturer:

Spanbild New Zealand Limited
112 Waterloo Rd
Sockburn
CHRISTCHURCH

TOTALSPAN®
STEEL BUILDINGS

Project Ref: JH.309

© Copyright 2017 Spanbild NZ Ltd. All rights reserved.

Don Campbell
7 Swindon Lane
Amberley
7410
021 1521186

Gable Range

Durability Statement

TOTALSPAN®

STEEL BUILDINGS

Project Ref: JH.309

© Copyright 2017 Spanbild NZ Ltd. All rights reserved.

Don Campbell
7 Swindon Lane
Amberley
7410
021 1521186

Gable Range

Site Plan

ROOF - (BAYS 2-1)

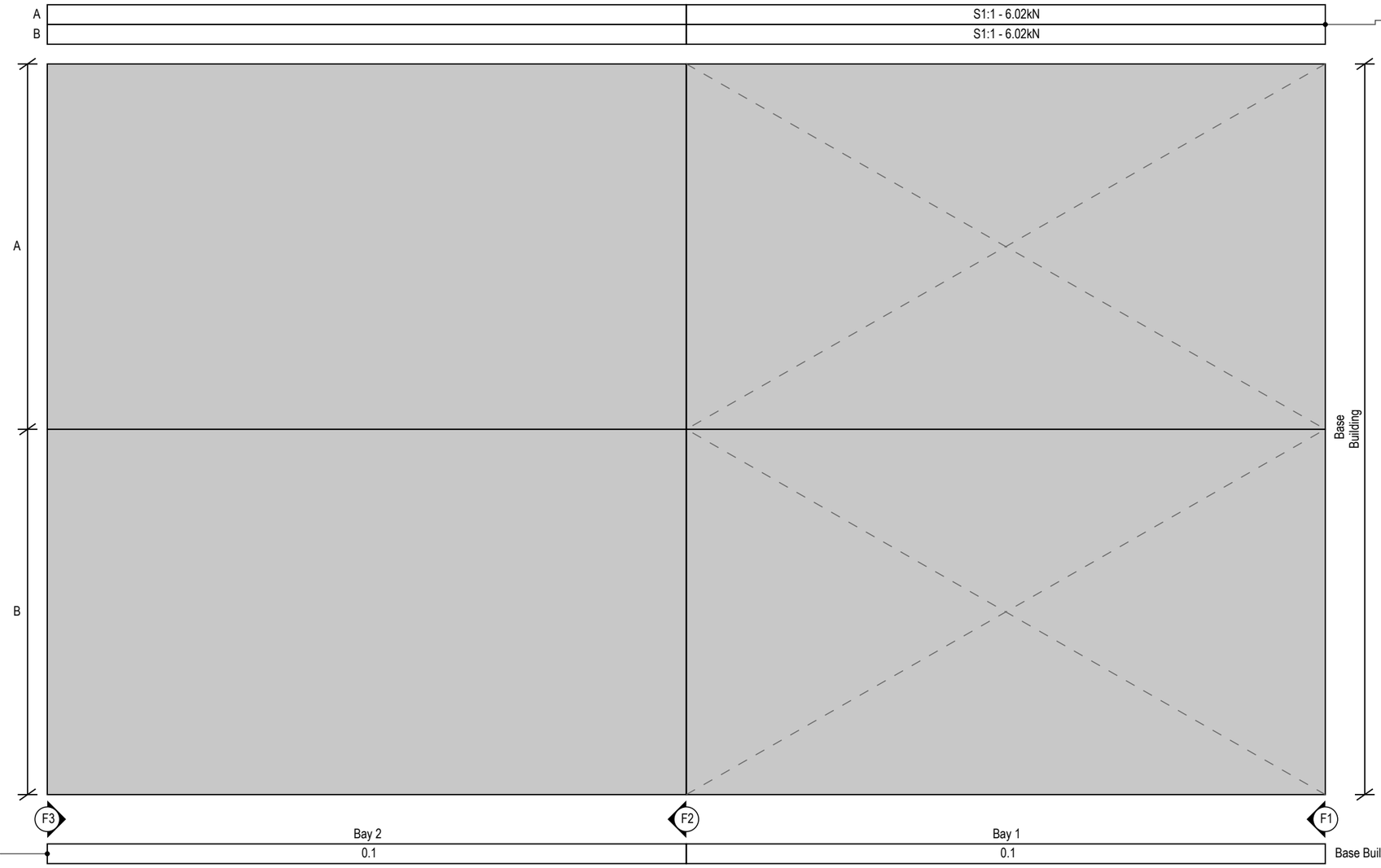

BRACING kN (Totals)		
Location	**Required**	**Achieved**
A	0.93 kN	6.02 kN
B	0.93 kN	6.02 kN

FRAMING SECTION TABLES	
Base Building - 0.1	
Design	Closed
Purlin (Bridge Count)	C100-10(1)
Purlin Centres	0.976m

BRACING DESIGN NOTES

All bracing must be connected to main structural members i.e. Portal Legs, Portal Rafters, End Wall, Uprights & Main Access Door Jambs. Bracing shall not be solely connected to intermediate members such as Girts, Purlins, Minor Access Door Jambs & PA Door Jambs.

BRACING LEGENDS

S1:1

Mitek Strip-Brace 27x0.6mm G550, configured as a single cross.

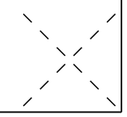

VIEWS

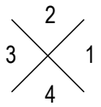

TOTALSPAN® STEEL BUILDINGS

Project Ref: JH.309

© Copyright 2017 Spanbild NZ Ltd. All rights reserved.

Don Campbell
7 Swindon Lane
Amberley
7410
021 1521186

Gable Range - Design

Engineering Tables

VIEW 2 - BUILDING SIDE (BAYS 1-2)

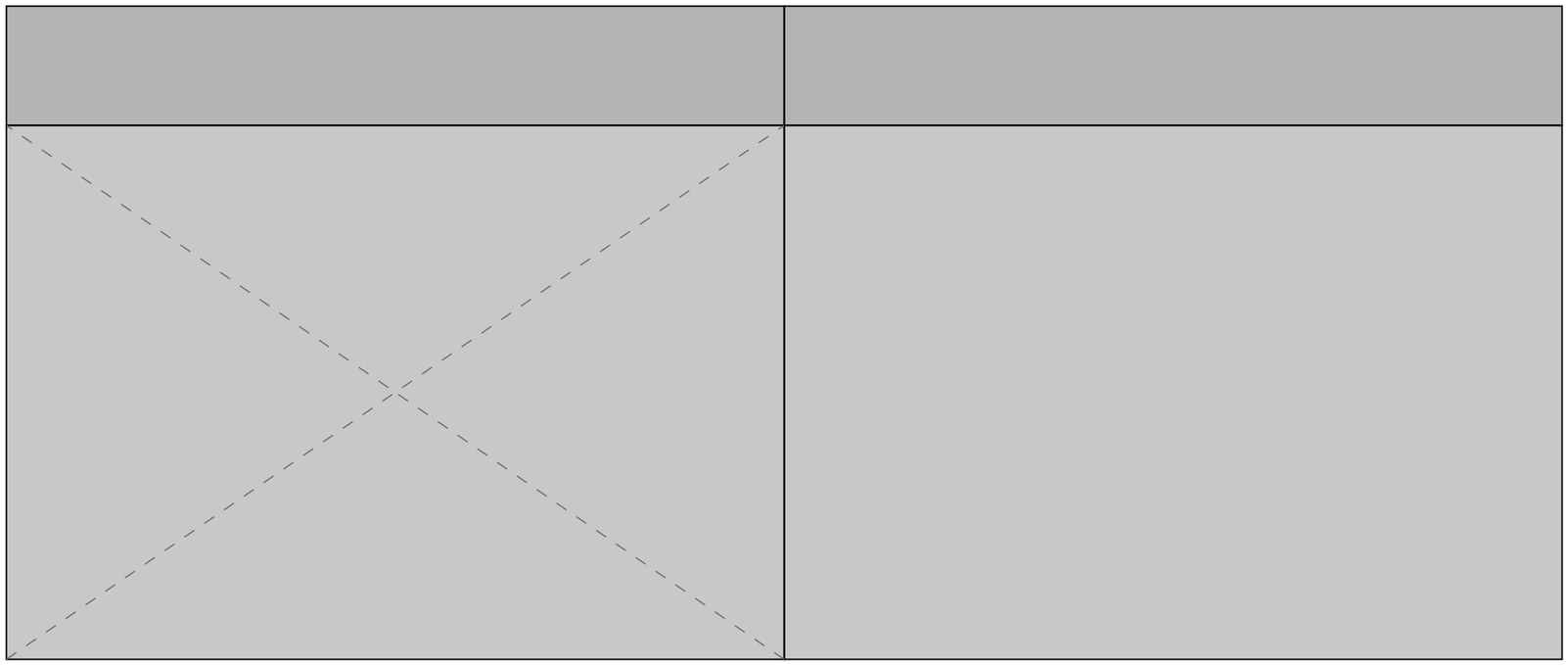

FRAMING SECTION TABLES	
Base Building - 2.1	
Design	Closed
Girt (Bridge Count)	C80-95(1)
Girt Centres	1.140m

	Bay 1	Bay 2
	2.1	2.1
	S1:1 - 5.77kN	

BRACING kN (Totals)	
Required	1.77 kN
Achieved	5.77 kN

VIEWS
2
3 1
4

TOTALSPAN® STEEL BUILDINGS

Project Ref: JH.309

© Copyright 2017 Spanbild NZ Ltd. All rights reserved.

Don Campbell
7 Swindon Lane
Amberley
7410
021 1521186

Gable Range - Design

Engineering Tables

VIEW 4 - BUILDING SIDE (BAYS 2-1)

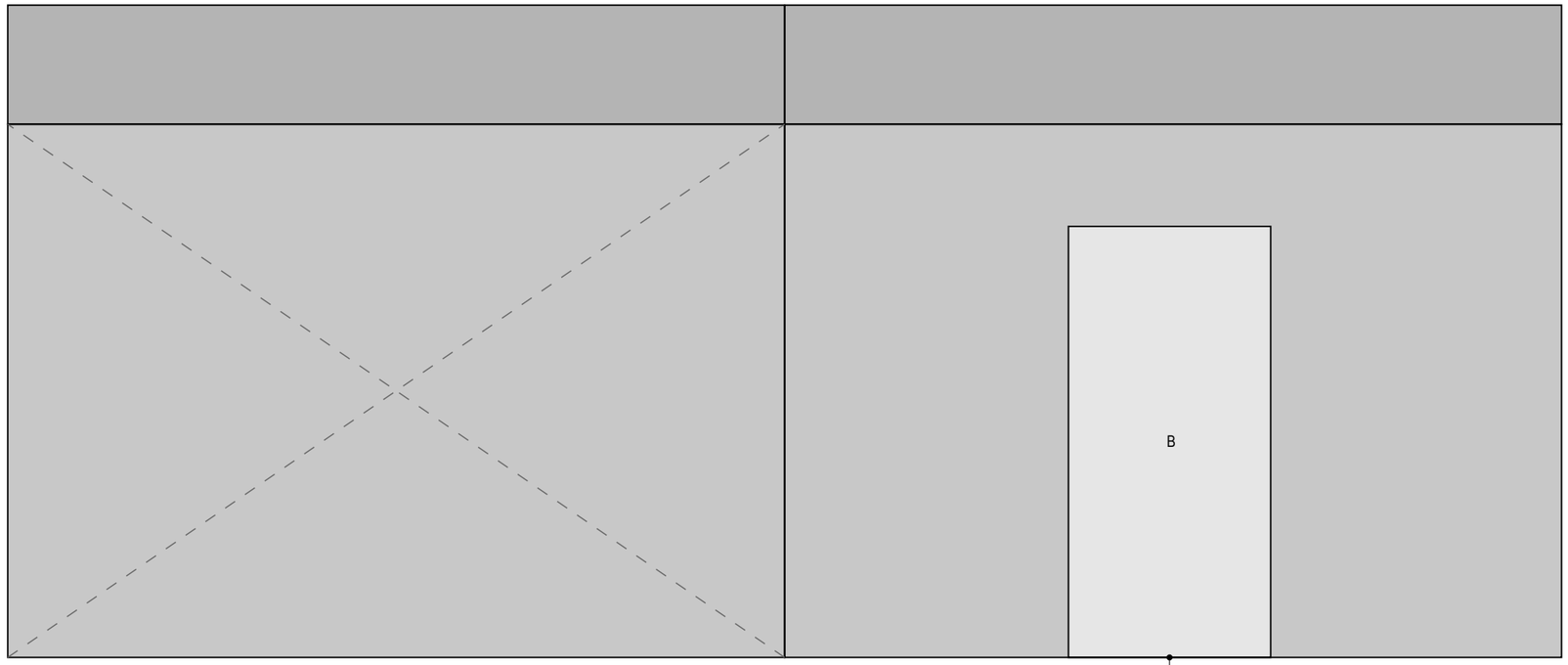

OPENING SECTION TABLES	
Opening - B	
Jambs & Head Beam	C80-95

FRAMING SECTION TABLES	
Base Building - 4.1	
Design	Closed
Girt (Bridge Count)	C80-95(1)
Girt Centres	1.140m

F3 F2 F1

	Bay 2	Bay 1
	4.1	4.1
	S1:1 - 5.77kN	

BRACING kN (Totals)	
Required	1.77 kN
Achieved	5.77 kN

VIEWS
2
3 1
4

TOTALSPAN® STEEL BUILDINGS

Project Ref: JH.309

© Copyright 2017 Spanbild NZ Ltd. All rights reserved.

Don Campbell
7 Swindon Lane
Amberley
7410
021 1521186

Gable Range - Design

Engineering Tables

FRAME F1

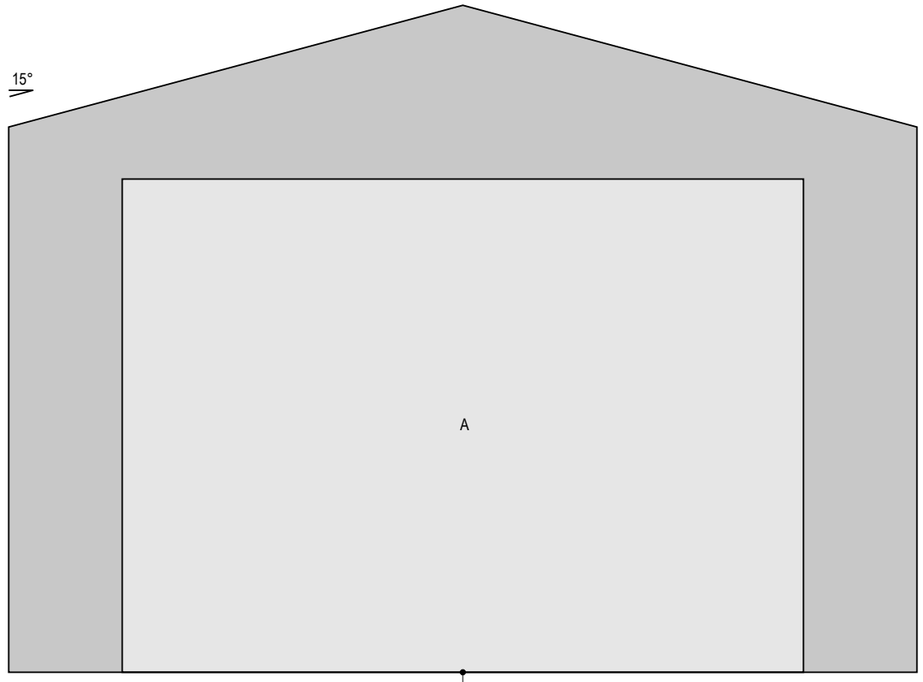

FRAMING SECTION TABLES	
Base Building - B.1	
Design	Closed
Leg & Rafter	C150-10
Girt	C80-75
Girt Centres	1.140m

OPENING SECTION TABLES	
Opening - A	
Jambs	C150-15
Head Beam	C150-10

VIEWS
2
3 1
4

TOTALSPAN® STEEL BUILDINGS

Project Ref: JH.309

© Copyright 2017 Spanbild NZ Ltd. All rights reserved.

Don Campbell
7 Swindon Lane
Amberley
7410
021 1521186

Gable Range - Design

Engineering Tables

FRAME F2

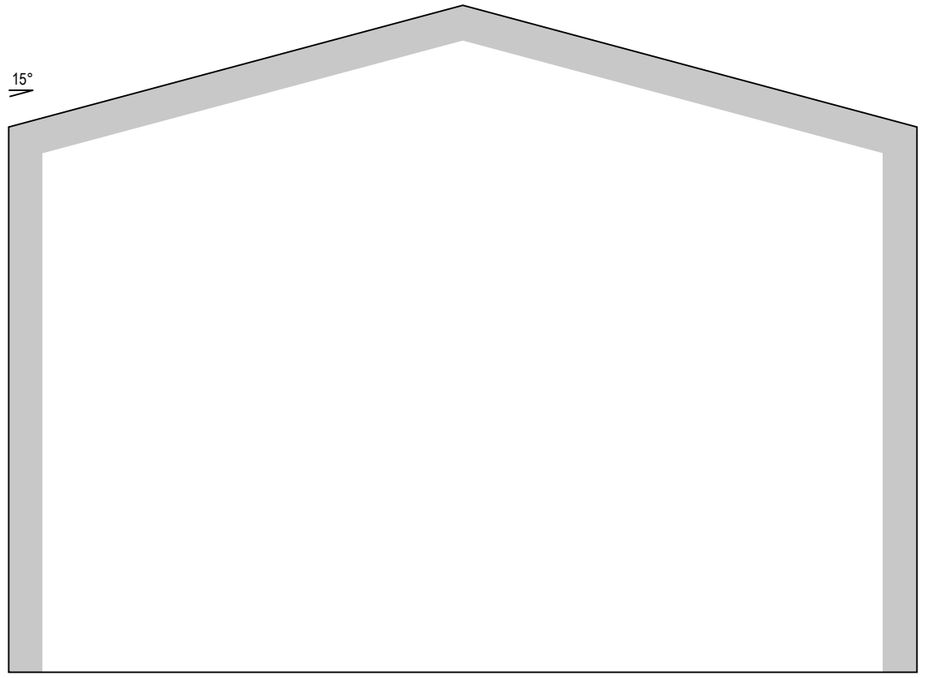

FRAMING SECTION TABLES	
Base Building - B.2	
Design	Closed
Leg & Rafter	C150-10

Base Building
B.2

VIEWS
2
3 1
4

TOTALSPAN STEEL BUILDINGS

Project Ref: JH.309

© Copyright 2017 Spanbild NZ Ltd. All rights reserved.

Don Campbell
7 Swindon Lane
Amberley
7410
021 1521186

FRAME F3

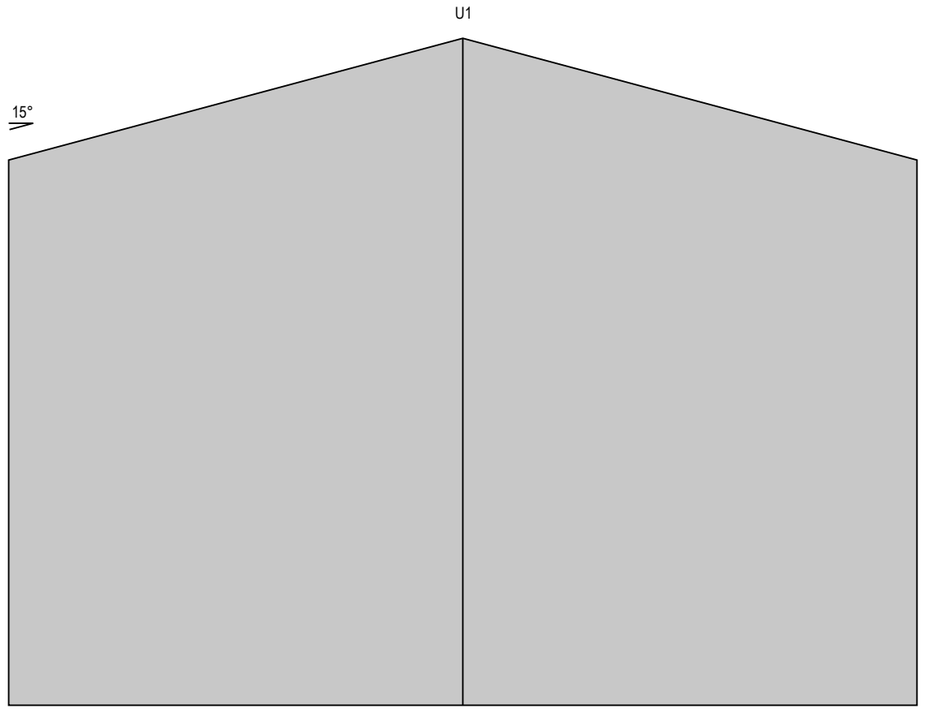

FRAMING SECTION TABLES	
Base Building - B.3	
Design	Closed
Leg & Rafter	C150-10
Upright - U1	C80-95
Girt	C80-75
Girt Centres	1.140m

VIEWS
2
3 1
4

TOTALSPAN® STEEL BUILDINGS

Project Ref: JH.309

© Copyright 2017 Spanbild NZ Ltd. All rights reserved.

Don Campbell
7 Swindon Lane
Amberley
7410
021 1521186

Gable Range - Design

Engineering Tables

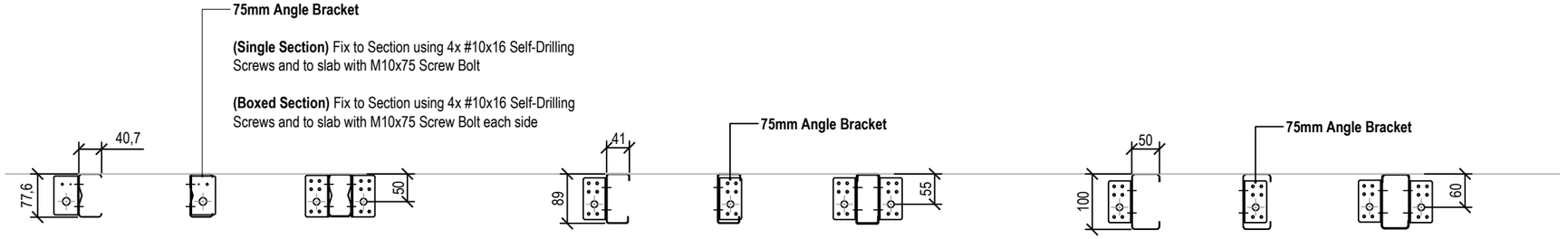

- **C80 Foundation Connections**
  SCALE 1:10

- **C90 Foundation Connections**
  SCALE 1:10

- **C100 Foundation Connections**
  SCALE 1:10

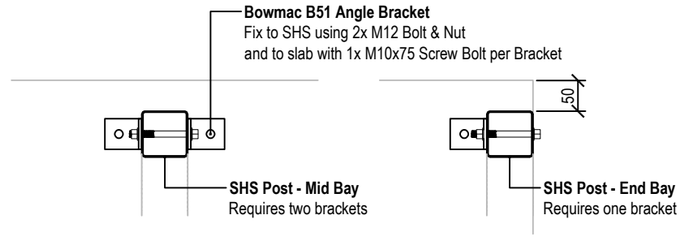

- **SHS Foundation Connections**
  SCALE 1:10

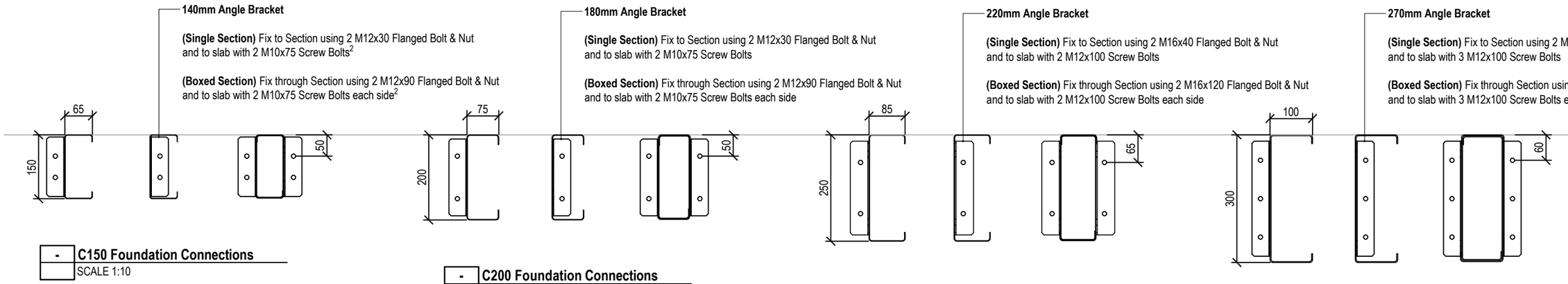

- **C150 Foundation Connections**
  SCALE 1:10

- **C200 Foundation Connections**
  SCALE 1:10

- **C250 Foundation Connections**
  SCALE 1:10

- **C300 Foundation Connections**
  SCALE 1:10

Important Notes

1. Recommended edge distances are listed above, brackets may be repositioned slightly +/- 3mm however concrete edge distance to bolt centre shall not be less than be 50mm
2. **C/B150-15 & C/B150-19 Portal Legs** shall have a M10x38mm Sqaure Washer to M10x75 Screw Bolts (otherwise, not required.)

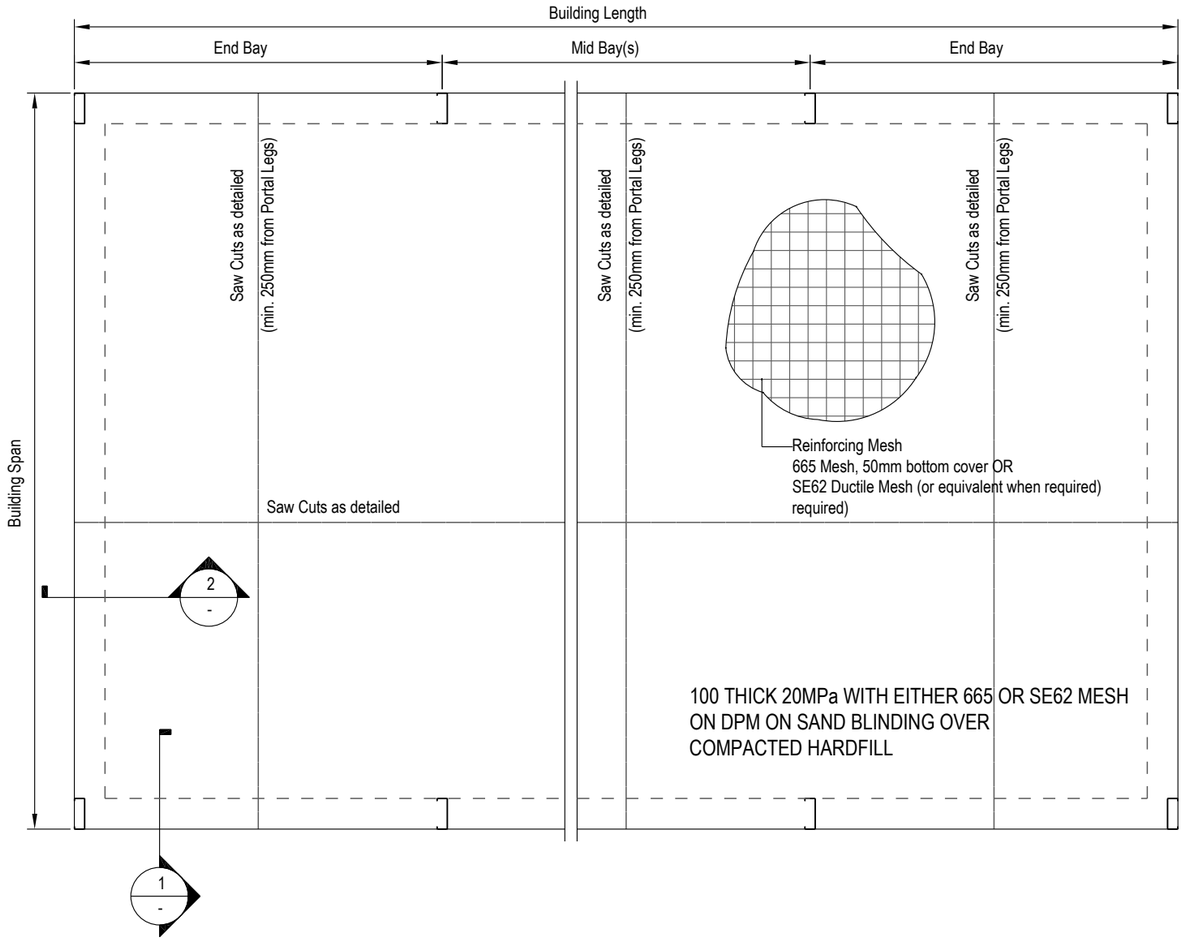

- **INDICATIVE SLAB PLAN (FOR NOTATION REFERENCE ONLY)**
SCALE 1:50

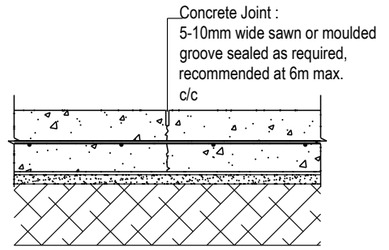

- **TIED JOINT / SAW CUTS**
SCALE 1:10

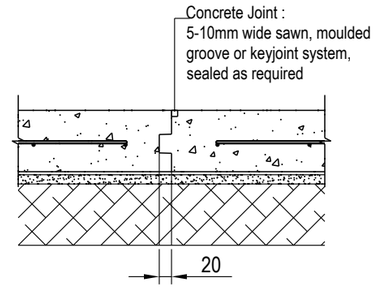

- **FREE KEYED JOINT**
SCALE 1:10

Important Notes

1. **Perimeter reinforcing**
   1.1. **Central reinforcing specified "along" building length;** shall continue "across" building span
   1.2. **Top and Bottom reinforcing specified "along" building length;** the lesser reinforcing specified (where applicable) shall be used for single central reinforcing "across" building span. Reinforcing "across" shall wrap around the corners 600mm to remain "continuous".
2. Slab thickness may be increased only in case of large machinery, equipment where heavier traffic loadings are required. Check control joint requirements as per CCANZ guidelines and install where recommended.
3. This slab has been designed in accordance with NZS3101:2006 and compliant to where lesser ductile mesh may be used per clause 5.3.2.7 (a) where "The yielding of reinforcement will not occur at the ultimate limit state".
4. Typical GL to FFL is 100mm for a "non-habitable" foundation.
5. Saw cuts to be minimum 250mm away from Portal Legs.
6. In areas where soil bearing is less than 225kPa UBC, excavate trench (max 600mm depth) to ground with 225kPa UBC and backfill with compacted hardfill.

Maximum Spacing of Free Joints (m) - as per CCANZ guidelines			
Steel	100mm Slab	120/125mm Slab	150mm Slab
665	26	21	17
663	37	30	25
661			35

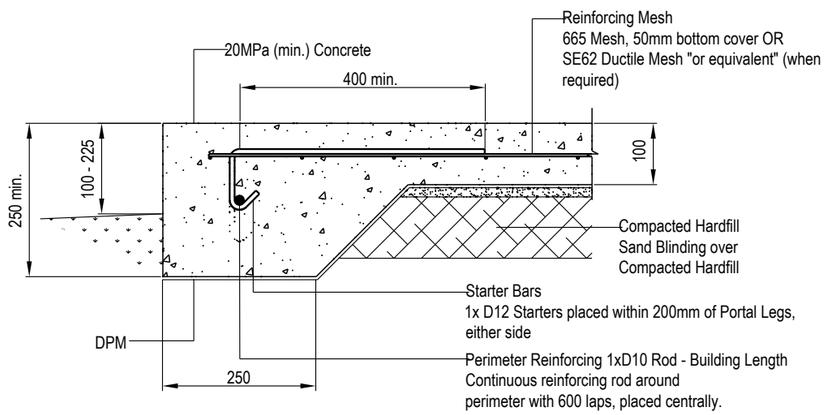

1 - **100MM FOUNDATION (CENTRAL REINFORCING)**
SCALE 1:10

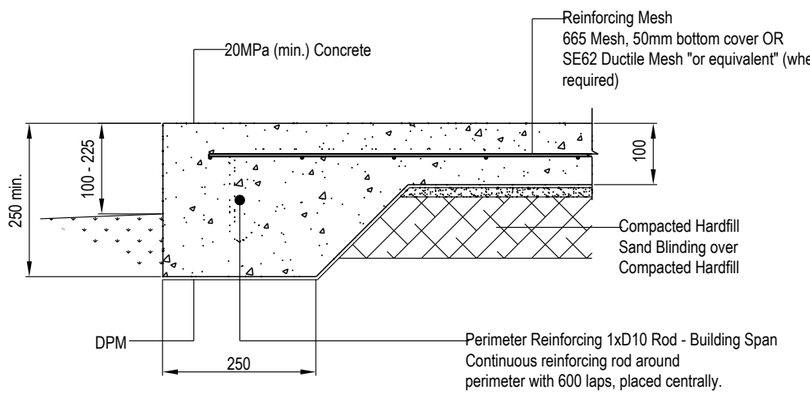

2 - **100MM FOUNDATION (CENTRAL REINFORCING)**
SCALE 1:10

TOTALSPAN®
STEEL BUILDINGS

Project Ref: JH.309

© Copyright 2017 Spanbild NZ Ltd. All rights reserved.

Don Campbell
7 Swindon Lane
Amberley
7410
021 1521186

Gable Range - Design

Foundation Details SD-F02

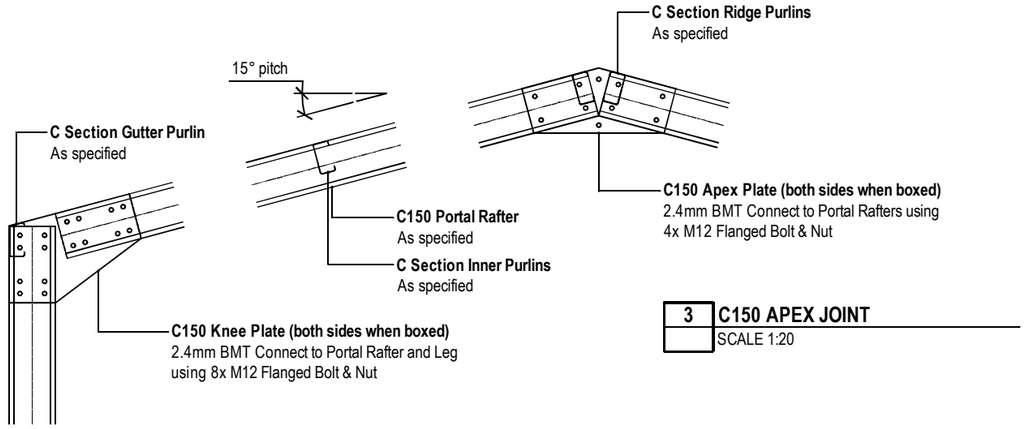

3 C150 APEX JOINT
SCALE 1:20

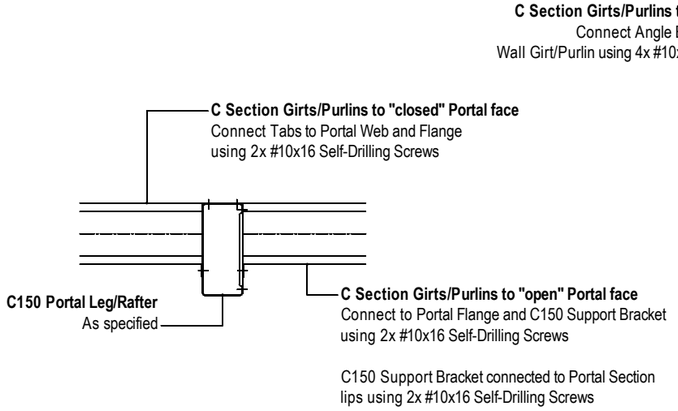

6 GIRT/PURLIN TABBED CONNECTION
SCALE 1:10

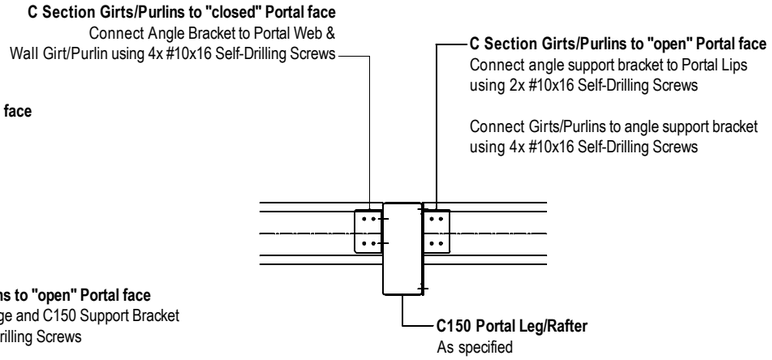

7 GIRT/PURLIN BRACKET CONNECTION
SCALE 1:10

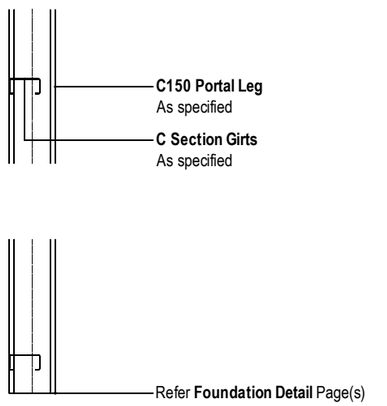

2 C150 KNEE JOINT
SCALE 1:20

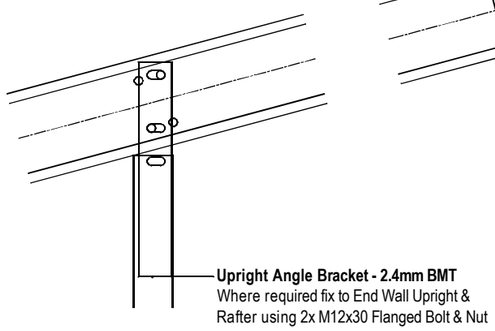

5 UPRIGHT TO RAFTER CONNECTION
SCALE 1:10

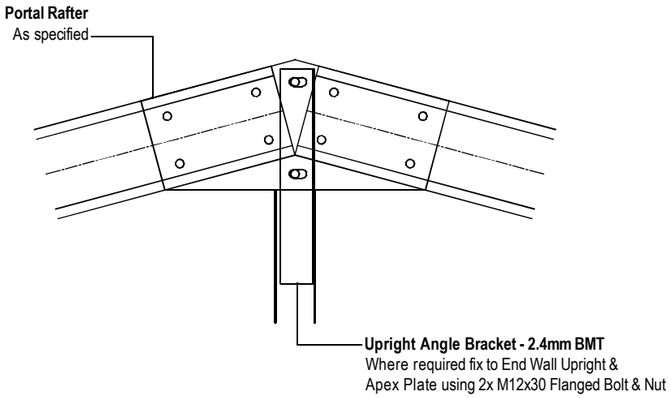

4 UPRIGHT TO APEX CONNECTION
SCALE 1:10

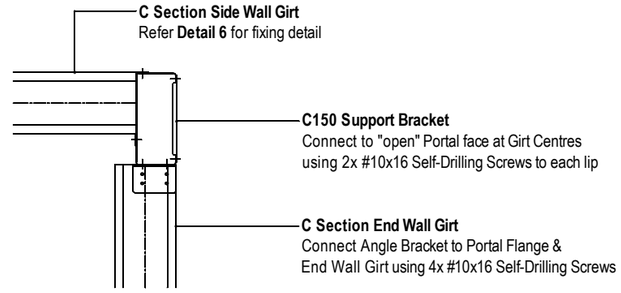

8 END WALL GIRT CONNECTION
SCALE 1:10

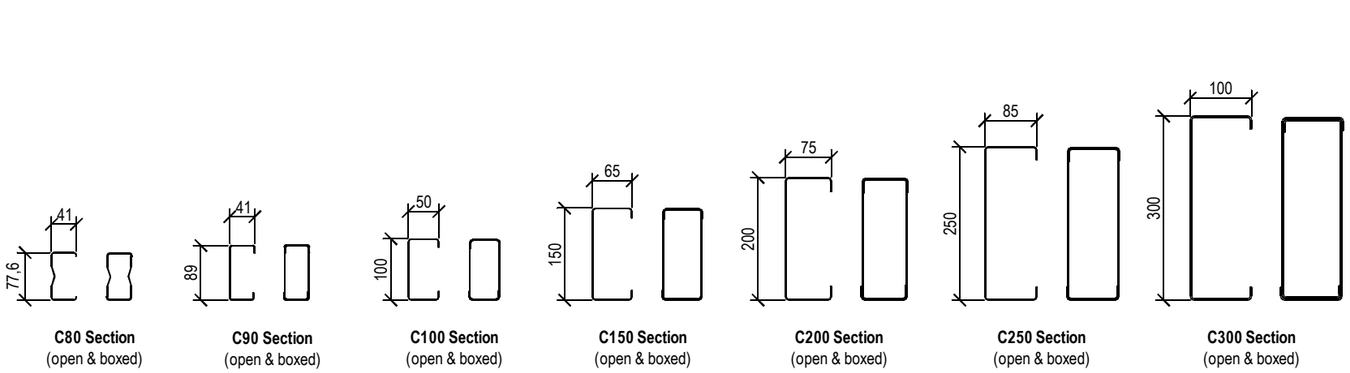

- C SECTION PROFILES (INCL. BOXING)
SCALE 1:20

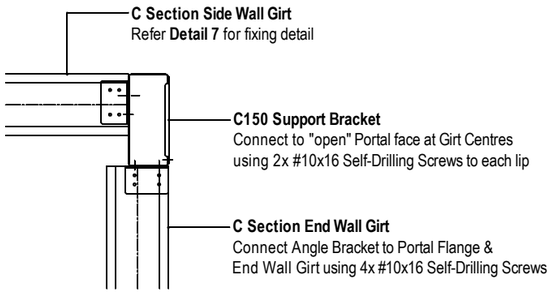

9 END WALL GIRT CONNECTION
SCALE 1:10

TOTALSPAN®
STEEL BUILDINGS

Project Ref: JH.309

© Copyright 2017 Spanbild NZ Ltd. All rights reserved.

Don Campbell
7 Swindon Lane
Amberley
7410
021 1521186

Gable Range - Design

Frame Details SD-P01

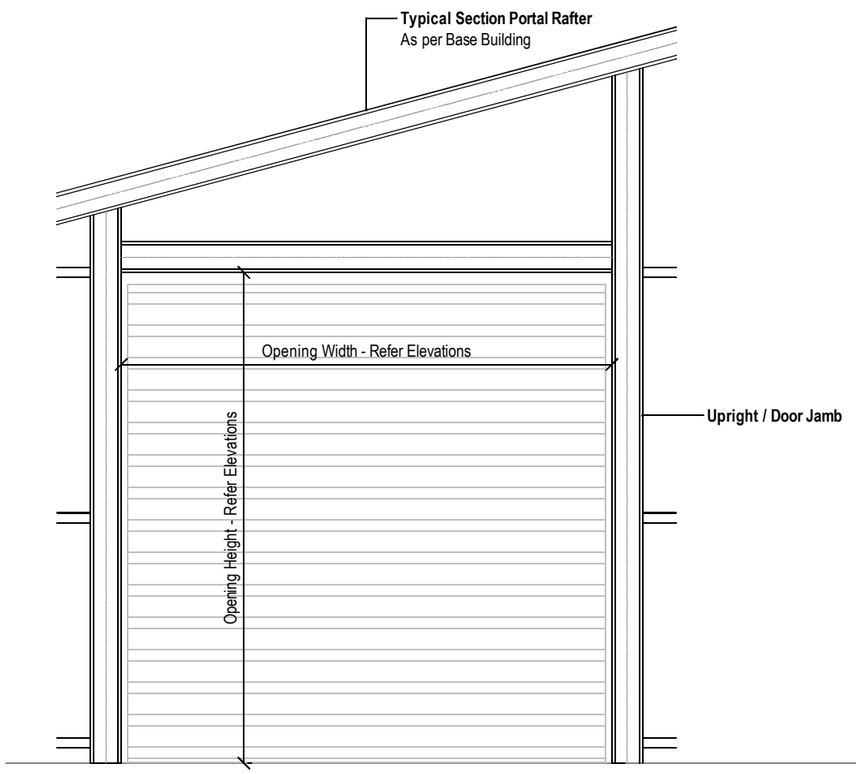

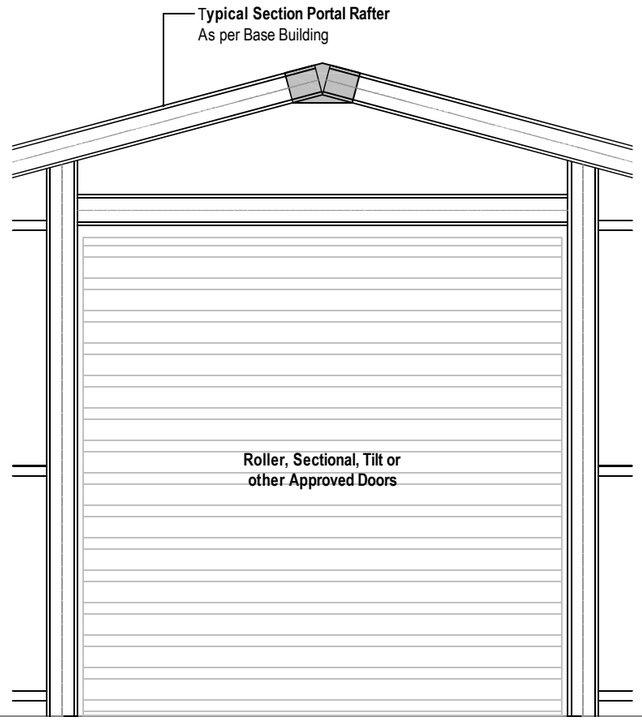

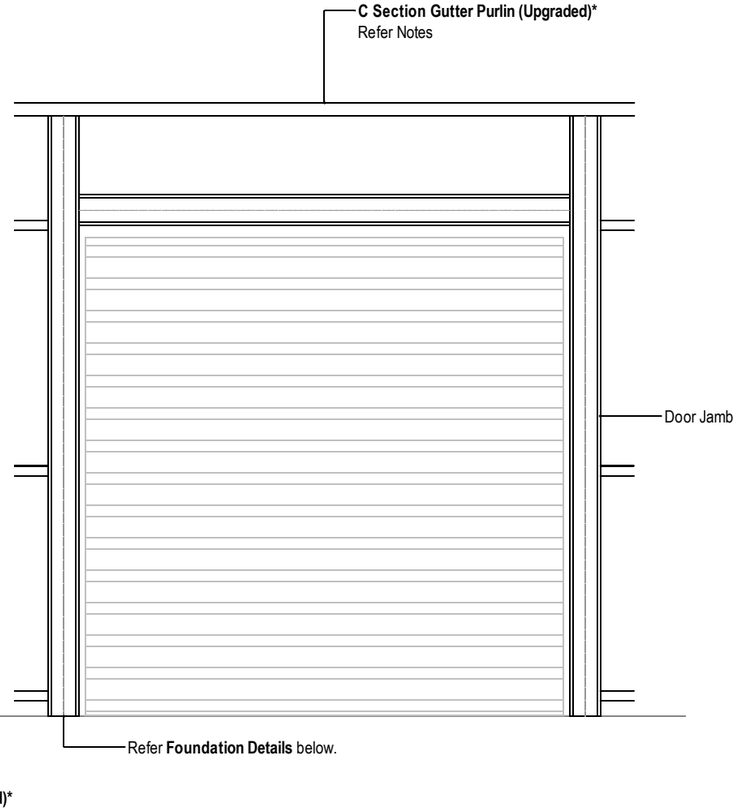

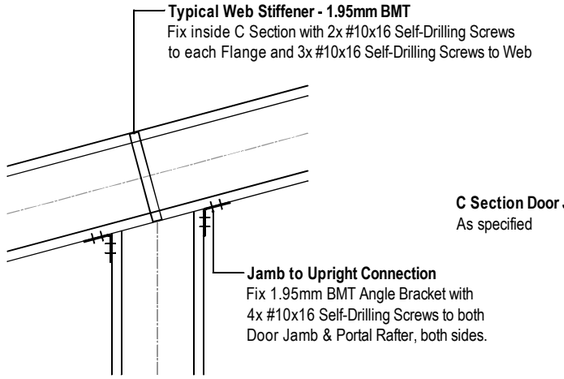

- **DOOR JAMB/UPRIGHT TO RAFTER CONNECTION**
  SCALE 1:10

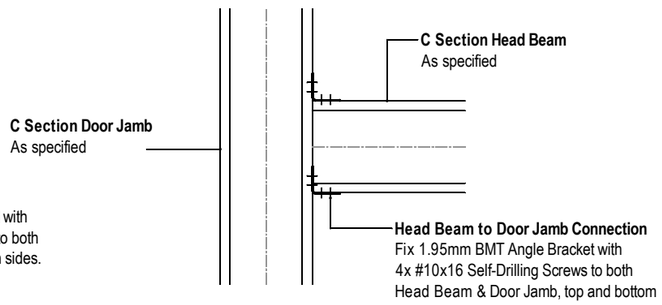

- **HEAD BEAM TO DOOR JAMB CONNECTION**
  SCALE 1:10

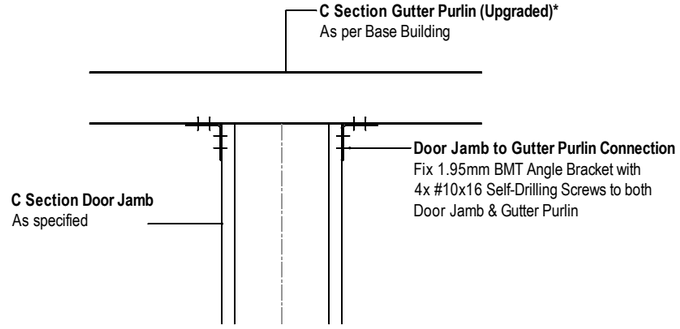

- **HEAD BEAM TO GUTTER PURLIN CONNECTION**
  SCALE 1:10

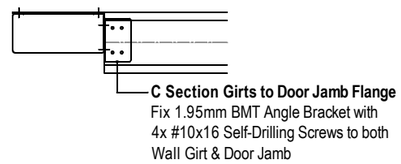

- **GIRT TO DOOR JAMB CONNECTION**
  SCALE 1:10

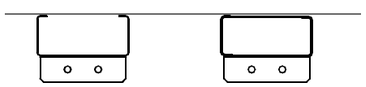

C150 Section Door Jambs
(open or boxed options)

- **C150 Jamb to Foundation Connections**
  SCALE 1:10

TOTALSPAN®
STEEL BUILDINGS

Project Ref: JH.309

© Copyright 2017 Spanbild NZ Ltd. All rights reserved.

Don Campbell
7 Swindon Lane
Amberley
7410
021 1521186

Gable Range - Design

Major Openings SD-M01

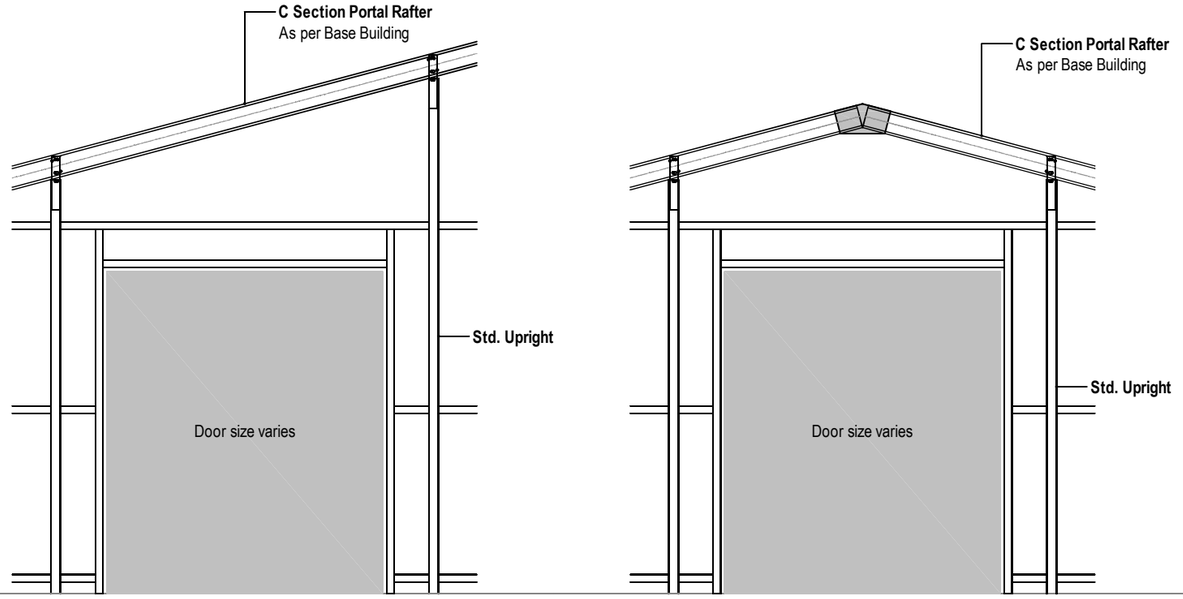

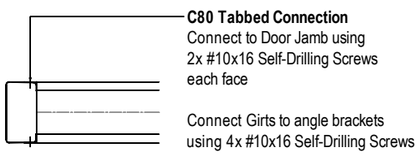

- C SECTION TABBED CONNECTION
SCALE 1:10

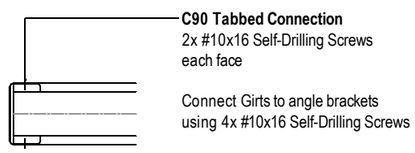

- C SECTION NOTCHED CONNECTION
SCALE 1:10

TOTALSPAN®
STEEL BUILDINGS

Project Ref: JH.309

© Copyright 2017 Spanbild NZ Ltd. All rights reserved.

Don Campbell
7 Swindon Lane
Amberley
7410
021 1521186

Gable Range - Design

Minor Door Openings SD-M05

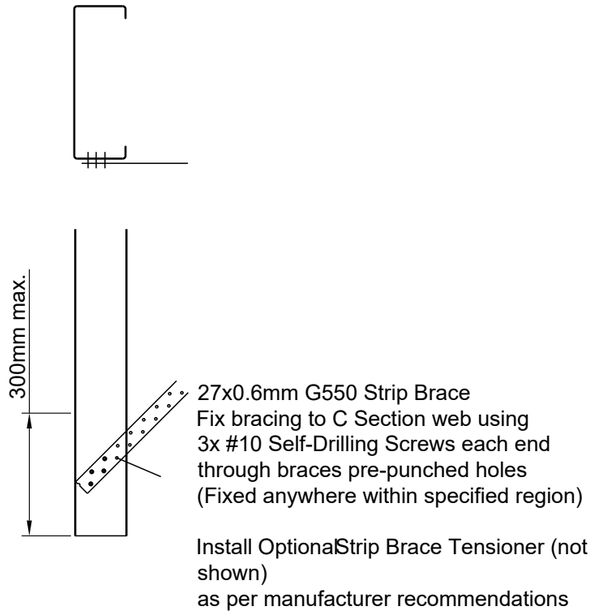

- SINGLE STRIP BRACE FIXING
SCALE 1:10

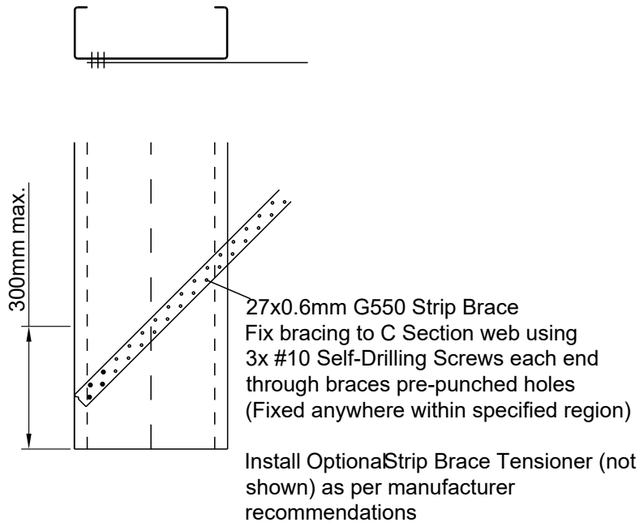

- SINGLE STRIP BRACE FIXING
SCALE 1:10

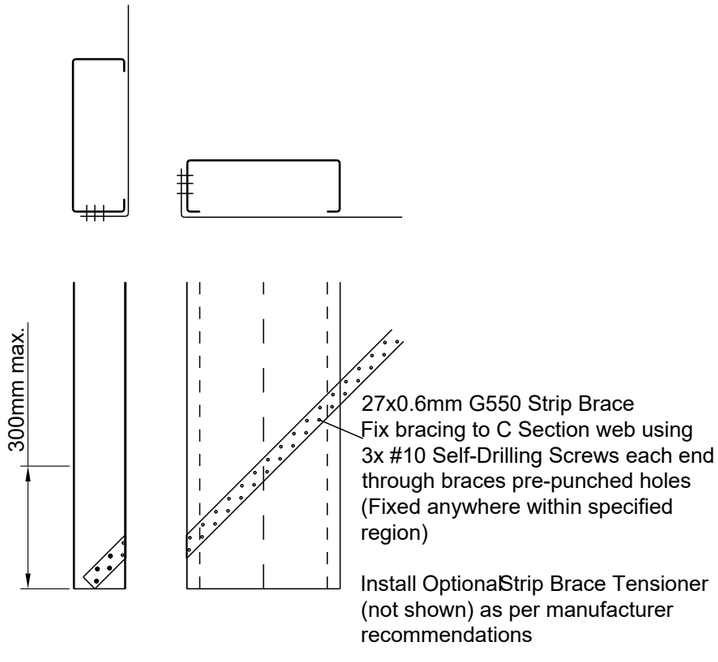

- SINGLE STRIP BRACE FIXING
SCALE 1:10

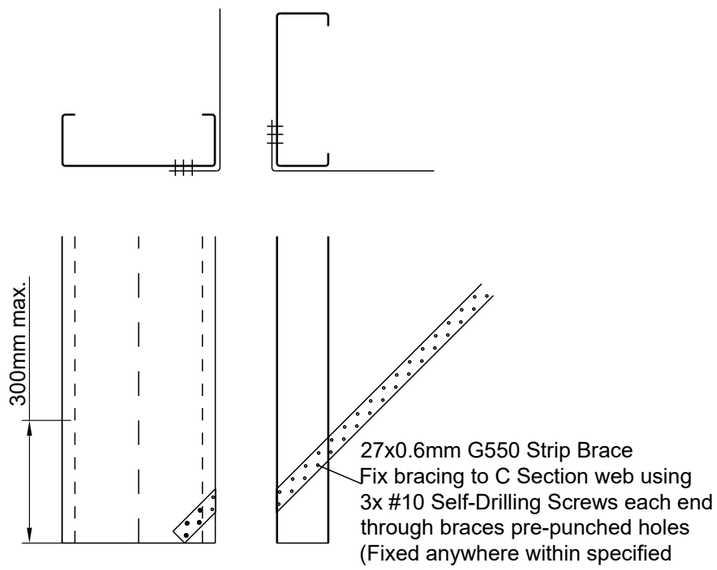

- SINGLE STRIP BRACE FIXING
SCALE 1:10

TOTALSPAN®
STEEL BUILDINGS

Project Ref: JH.309

© Copyright 2017 Spanbild NZ Ltd. All rights reserved.

Don Campbell
7 Swindon Lane
Amberley
7410
021 1521186

Gable Range - Design

Bracing Details

Sheet 17 of 19

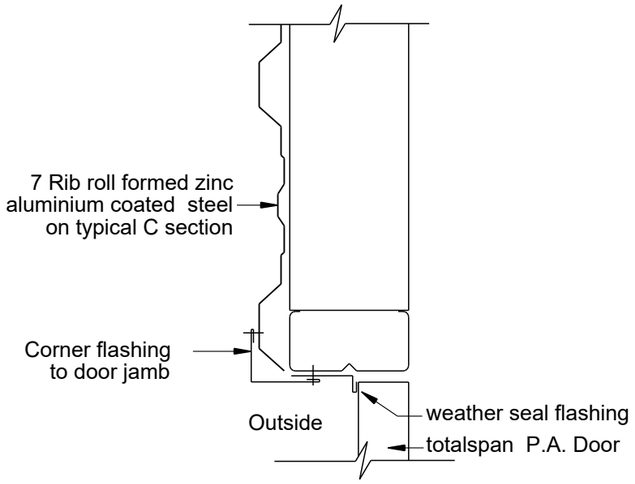

- **P.A. Door Jamb Detail**
SCALE: NTS

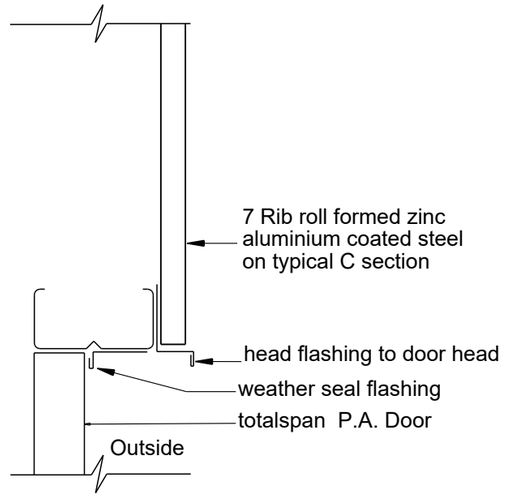

- **P.A. Door Head Detail**
SCALE: NTS

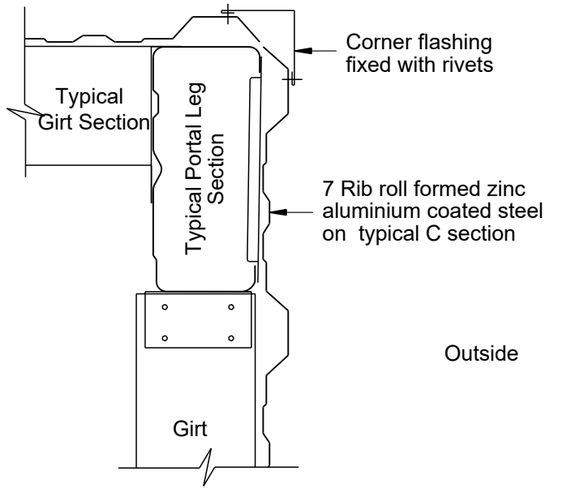

- **External Corner**
SCALE: NTS

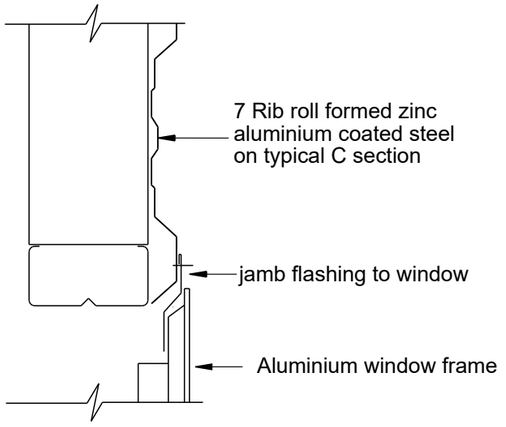

- **Window Jamb Detail**
SCALE: NTS

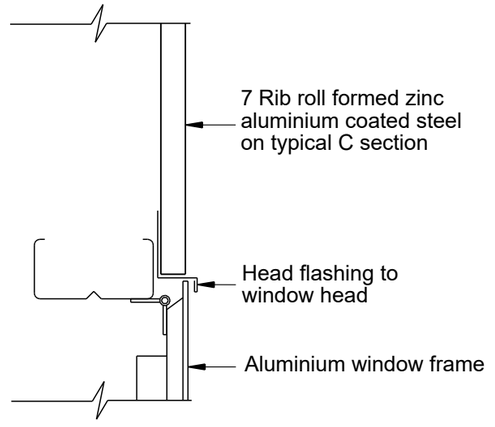

- **Window Head Detail**
SCALE: NTS

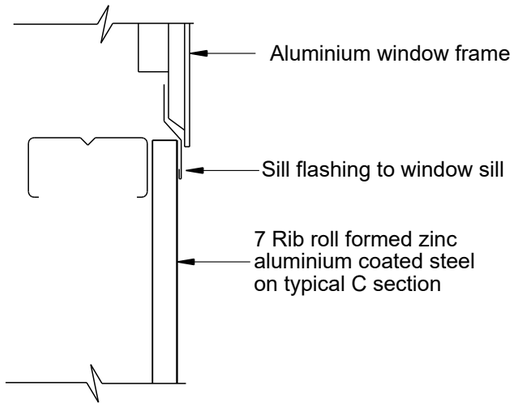

- **Window Sill Detail**
SCALE: NTS

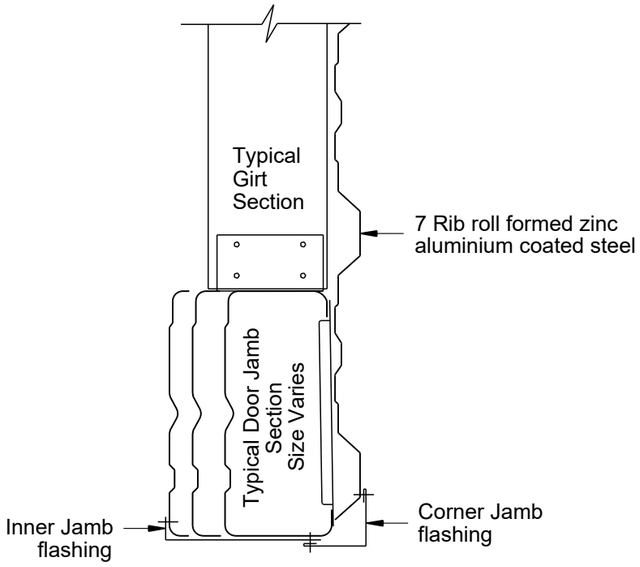

- **Main Access Door Jamb Detail**
SCALE: NTS

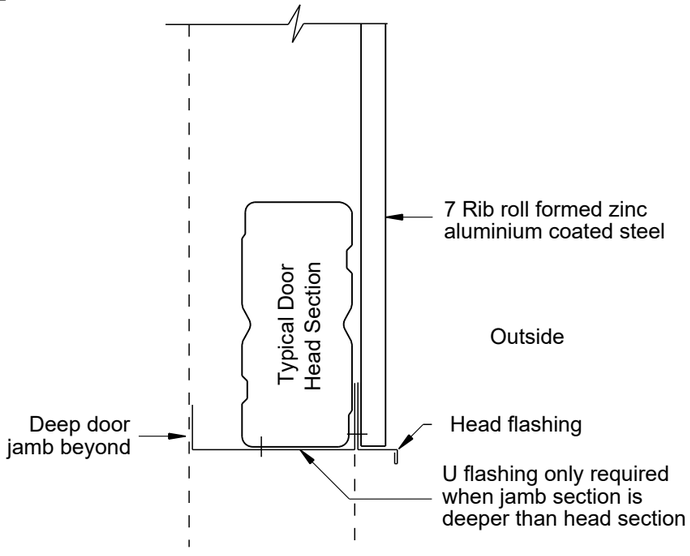

- **Main Access Door Head Detail**
SCALE: NTS

TOTALSPAN®
STEEL BUILDINGS

Project Ref: JH.309

© Copyright 2017 Spanbild NZ Ltd. All rights reserved.

Don Campbell
7 Swindon Lane
Amberley
7410
021 1521186

Gable Range

Flashing Details

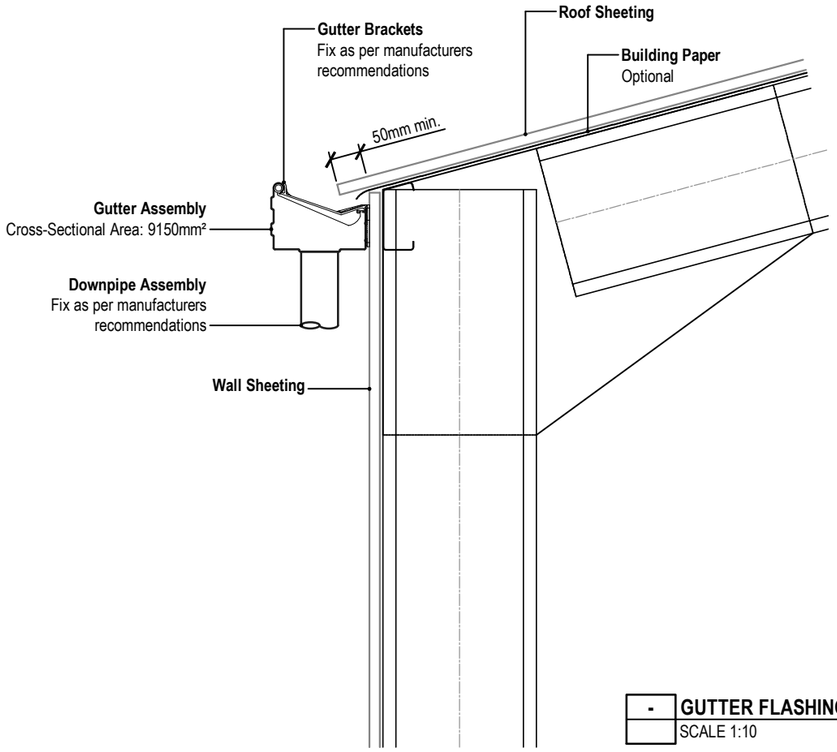

- **GUTTER FLASHING DETAIL**
SCALE 1:10

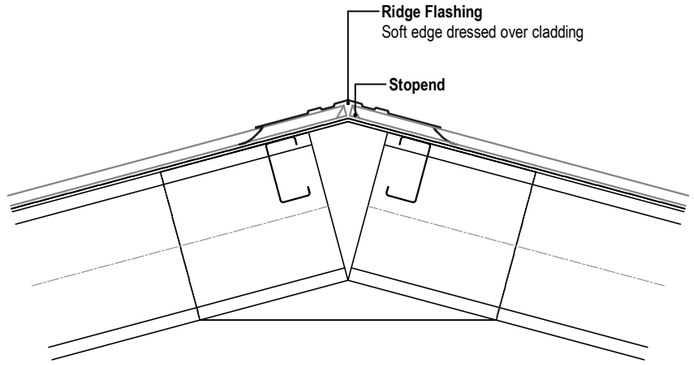

- **RIDGE FLASHING DETAIL**
SCALE 1:10

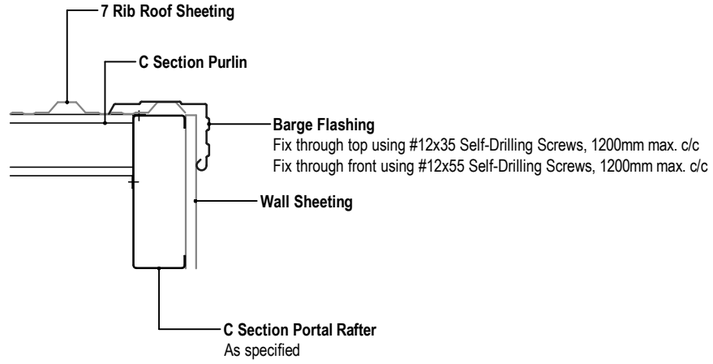

- **BARGE FLASHING DETAIL**
SCALE 1:10

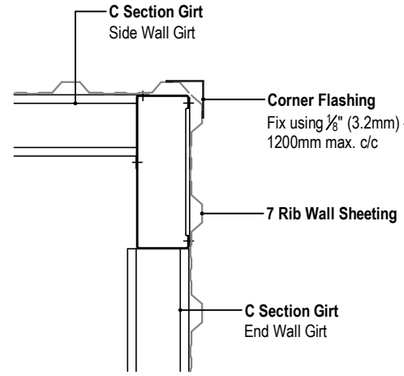

- **CORNER FLASHING DETAIL**
SCALE 1:10

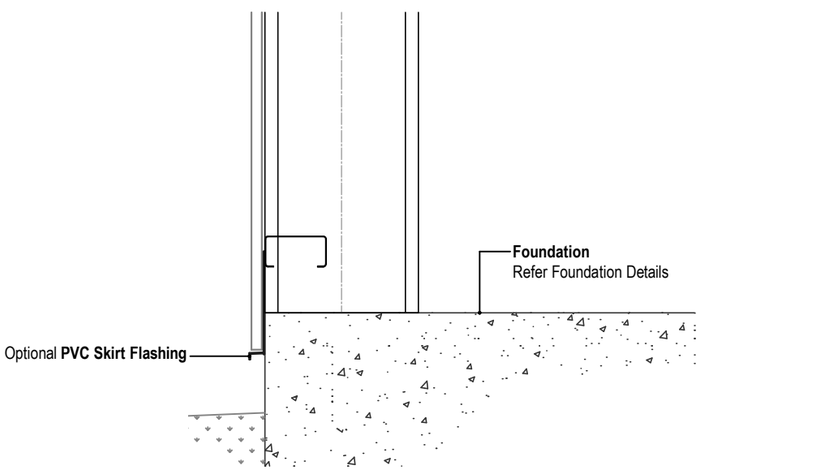

- **SKIRT FLASHING DETAIL**
SCALE 1:10

Important Design Notes

1. Roof and Wall Sheeting shall be 0.35 - 0.55 B.M.T, AZ150 Coating, G550 Steel only. Alternative claddings (excluding light-weight translucent panel i.e. Ampelite), require an independent specific design certificate for the scope of work.
2. Wall Cladding to have minimum 50mm cover and 40mm min. clearance to ground level
3. Fixing pattern as per E2/AS1 or NZ MRM - NZ Metal Roof and Wall Cladding Code of Practice.
4. Flashings shall be fixed as per manufacturers recommendations.
5. Additional options may include:
   - 5.1. Snow straps for gutters
   - 5.2. Gutter purlin flashing
   - 5.3. Building paper in walls

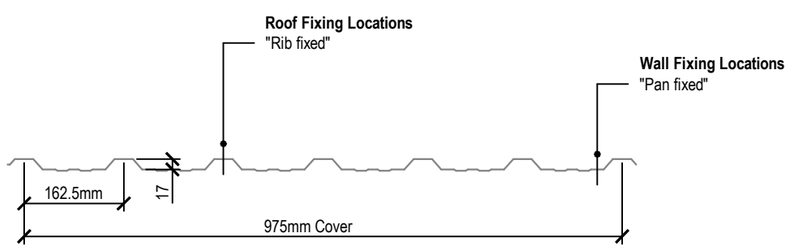

- **7 RIB CLADDING PROFILE**
SCALE 1:10

TOTALSPAN®
STEEL BUILDINGS

Project Ref: JH.309

© Copyright 2017 Spanbild NZ Ltd. All rights reserved.

Don Campbell
7 Swindon Lane
Amberley
7410
021 1521186

Gable Range

Flashing Detail SD-E01

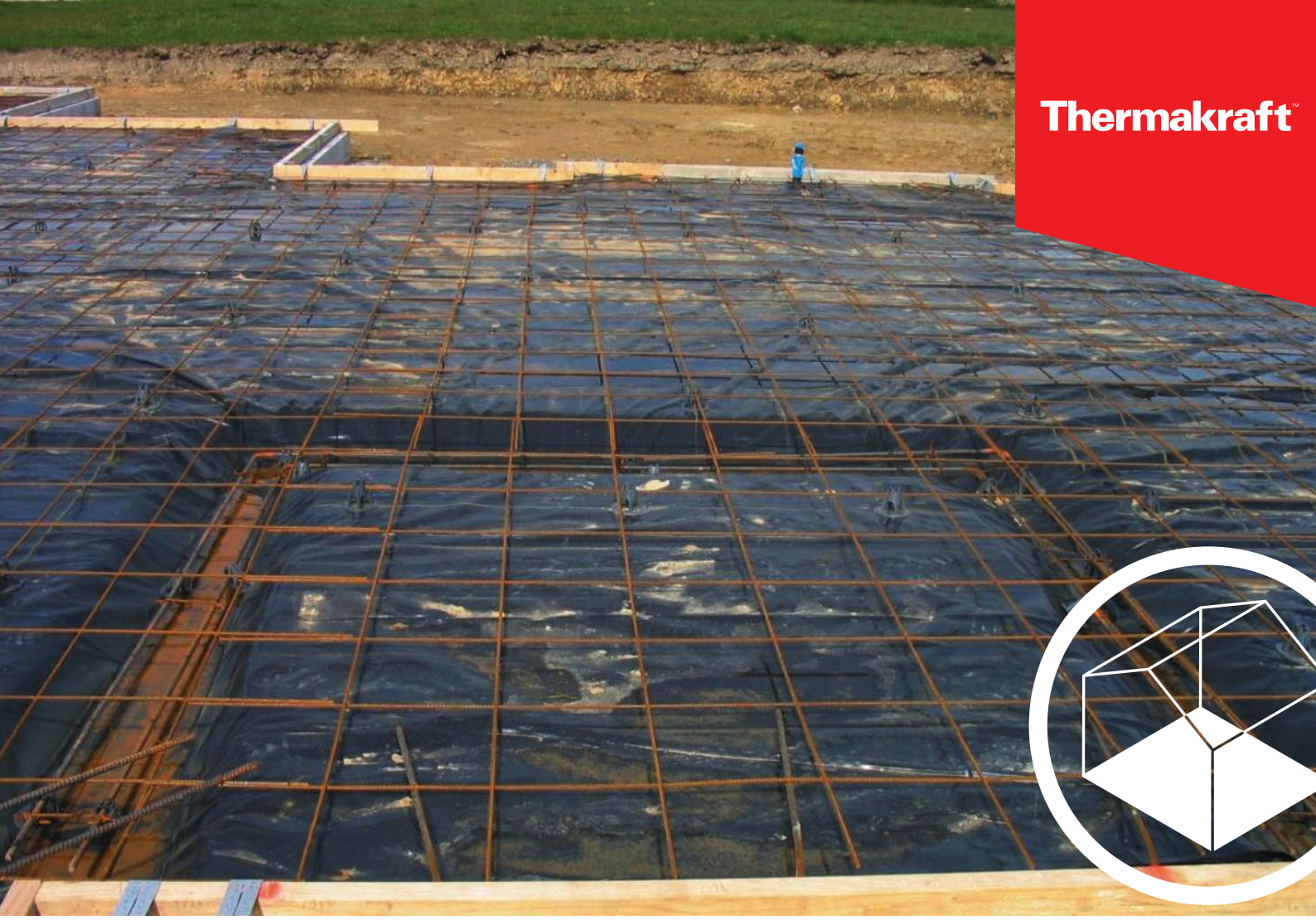

Thermakraft™

Product Data Sheet

THERMATHENE BLACK

Damp Proof Membrane (DPM)

Thermathene Black is a concrete underlay that is made from a tear and puncture resistant polyethylene film. It is commonly known as a Damp Proof Membrane (DPM).

Thermathene Black comes in two roll sizes:

Product Code	Width	Length	Coverage
PF250025	4000mm	25m	100m^2 coverage
PF250050	4000mm	50m	200m^2 coverage

Smarter products. Better buildings.
thermakraft.co.nz

Thermathene Black

Damp Proof Membrane (DPM)

Scope of Use

Thermathene Black intended for use as a damp-proof membrane separating concrete slab from ground soil. The product acts as a vapour barrier to stop ground moisture penetrating the concrete. Thermathene Black must be sealed with Thermakraft White General Purpose tape at the laps joints to form a complete vapour barrier.

General

- Unaffected by LOSP treated timber. However, LOSP treated timber must have sufficient time for the solvent chemical to flash off in well ventilated area. Recommended minimum 7 days.
- 4m x 25m [100m2] and 4m x 50m [200m^2] unfolded size.
- 250 Micron in thickness.

Limitations

- Maximum weather or UV exposure is 28 days.
- Cannot be used as a roof or wall underlay.

Compliance

Thermathene Black is an acceptable solution as per the requirements of the NZBC. Thermathene Black meets the requirements of NZBC 3604:2011 Clause 7.5.4.2, NZBC Acceptable Solutions E2/AS1, Table 23 and NZS 4229:2013 Clause 7.4 & 7.6.

When Thermathene Black is used and installed as a damp-proof membrane as per Thermakraft's literature, the product will meet or contribute to meeting the following provisions of the NZBC: Clause B2 Durability: Performance B2.3.1 (a), 50 years, Clause E2 External Moisture: Performance E2.3.3 & Clause F2 Hazardous Materials: Performance F2.3.1.

Product Warranty

Standard Thermakraft warranty applies. Refer to Thermakraft Warranty Statement for further details. This is available online at **thermakraft.co.nz** or call **0800 806 595.**

Thermakraft Limited / 0800 806 595

Smarter products. Better buildings.

thermakraft.co.nz

The recommendations contained in Thermakraft's literature are based on good building practice, but are not an exhaustive statement of all relevant information and are subject to any conditions contained in the Warranty. All product dimensions and performance claims are subject to any variation caused by normal manufacturing process and tolerances. Furthermore, as the successful performance of the relevant system depends on numerous factors outside the control of Thermakraft (for example quality of workmanship and design), Thermakraft shall not be liable for the recommendations in that literature and the performance of the Product, including its suitability for any purpose or ability to satisfy the relevant provisions of the Building Code, regulations and standards. Literature subject to change without notification. Latest documentation can be found on the website. E&OE.

Issue 4, November 2019

Thermakraft™



Installation Guide

THERMATHENE BLACK

Damp Proof Membrane (DPM)

Thermathene Black is a concrete underlay that is made from a tear and puncture resistant polyethylene film. It is commonly known as a Damp Proof Membrane (DPM).

Product usage

Thermathene Black is used as a concrete underlay and a moisture vapour barrier in areas where protection is required. The product is 250 microns in thickness and is coloured black. Thermathene Black may also be used under suspended subfloors as ground protection from rising damp.

Smarter products. Better buildings.
thermakraft.co.nz

Installation Guide

Application Method

- Thermathene Black should be installed in accordance with the requirements of NZS3604:2011 and must be laid on a properly prepared base as required by NZS3604:2011 Section 7.5.3 to 7.5.6.2.
- Thermathene Black must be laid in a continuous manner with all laps minimum 150mm, and penetrations to be taped with Thermakraft White General Purpose Tape.
- Thermathene Black should be laid in a neat fashion with a smooth surface, with as many of the ripples as possible eliminated.
- Thermathene Black must be inspected for any damage (tears or pentrations) prior to concrete placement. Any damage must be repaired with Thermakraft White General Purpose Tape, for any larger damage a patch of Thermathene Black maintaining a 150mm lap.
- Thermathene Black must not be left exposed for more than 28 days.
- Thermathene must be installed by a licensed building practitioner.
- Thermathene Black may also be used to cover ground areas under suspended timber floors to prevent the rise of dampness. Ensure that the site is clear of rubbish, sharp edges such as rocks or bricks. Slit and patch around jack studs or pipe work. All penetrations and joints must be taped.

Handling and Storage

Thermathene Black must be handled with care to prevent damage, the product must be stored under cover well away from direct moisture, rainfall contact and sunlight (UV). Care should be taken not stack other materials on top of the product.

Thermakraft Limited / 0800 806 595

The recommendations contained in Thermakraft's literature are based on good building practice, but are not an exhaustive statement of all relevant information and are subject to any conditions contained in the Warranty. All product dimensions and performance claims are subject to any variation caused by normal manufacturing process and tolerances. Furthermore, as the successful performance of the relevant system depends on numerous factors outside the control of Thermakraft (for example quality of workmanship and design), Thermakraft shall not be liable for the recommendations in that literature and the performance of the Product, including its suitability for any purpose or ability to satisfy the relevant provisions of the Building Code, regulations and standards. Literature subject to change without notification. Latest documentation can be found on the website. E&OE.

Issue 1, November 2019



Thermakraft™

Product Data Sheet

COVERTEK 405

Self-supporting roof and wall underlay

Covertek 405 is a premium synthetic roof and wall underlay designed as a means of managing condensation, water vapour transfer and water ingress. It is self-supporting, stable and shrink resistant and can be installed in applications where the roof pitch is 3° and above.

Covertek 405 comes in three roll sizes:

1250mm wide	20m long	25m² Coverage[2]
1250mm wide	40m long	50m² Coverage[2]
2550mm wide[1]	29.4m long	75m² Coverage[2]

Cut to Length available – Contact your Thermakraft Representative.

1 **Note:** made to order.
2 **Note:** m² is the roll size for actual coverage, allow for laps and joins.

Smarter products. Better buildings.
thermakraft.co.nz

CodeMark GM-CM30030

BRANZ Appraised
Appraisal No.743 [2019]

Covertek 405

Self-supporting roof and wall underlay

Scope of Use

Roof Application

- Suitable with masonry tile, metal tile and profiled metal roof cladding.
- Suitable for timber or steel framed buildings.
- Can be used on roofs up to and including NZS 3604 'Extra High' wind zones.
- Self-supporting - Refer to installation guide regarding underlay support requirements.
- Not suitable for roof pitch less than 3 degrees.
- Will provide temporary weather protection during construction (maximum 7 days), same day coverage recommended.

Wall Application

- Can be used with timber and steel framing, either direct or in conjunction with an 18mm minimum drained cavity.
- Suitable with absorbent (e.g. timber, brick or fibre cement) or non-absorbent wall claddings (e.g. metal or plastic).
- Suitable with masonry veneer in accordance with NZBC Acceptable Solution E2/AS1 or NASH Building Envelope Solutions.
- Is suitable for use in Wind Zones of NZS 3604 up to and including 'Very High' when used as a standalone flexible underlay, and 'Extra High' when used as a flexible underlay over a rigid wall underlay.
- Is suitable as an air barrier in unlined wall spaces.
- Will provide some temporary weather protection during construction (maximum 60 days for wall application).

General

- Is fire retardant.
- Unaffected by LOSP or other solvent based treated timber. However, LOSP or other solvent based treated timber must have sufficient time for the solvent chemical to flash off in a well ventilated area. Recommended minimum 7 days.
- Tear resistant and strong.

Limitations

- Must NOT be exposed to the weather or UV for more than 7 days as a roof underlay and 60 days as a wall underlay.
- Must not be used under translucent sheeting.

Compliance

Roof Application

- Can be used as an underlay within the scope limitations of NZBC Acceptable Solution E2/AS1, Paragraph 1.1, with regards to building height and floor plan area.
- Or within the scope limitations of NASH Building Envelope Solutions, Paragraph 1.1 for steel framed buildings.
- Refer BRANZ Appraisal No 743 (2019) and CodeMark Certificate GM-CM30030 for full details.
- CodeMark Certification only covers roof application.

Wall Application

- Can be used as a wall underlay within the scope limitations of NZBC Acceptable Solution E2/AS1, Paragraph 1.1, with regards to building height andvfloor plan area.
- Or within the scope limitations of NASH Building Envelope Solutions, Paragraph 1.1 for steel framed buildings.
- Refer to BRANZ Appraisal No 743 (2019) for full details.

Flammability Index

Thermakraft Covertek 405 Underlay has an AS 1530 Part 2 Flammability Index of not greater than 5 and therefore meets the requirements of NZBC Acceptable Solutions C/AS2 to C/AS6, Paragraph 4.17.8 b), for the surface finish requirements of suspended flexible fabric used as an underlay to exterior cladding that is exposed to view in occupied spaces.

Durability

Meets the Performance Requirements of NZBC Clauses B2, Durability (B2.3.1 (a) 50 years, B2.3.1 (b) 15 years and B2.3.2), C3 Fire affecting areas beyond the fire source C3.4 (c) E2 External Moisture, and F2 Hazardous Building Materials F2.3.1/C, providing:

- It is not damaged.
- Is installed in accordance with instructions.
- Is not left exposed for more than 7 days (roof), same day coverage recommended.
- Is not left exposed for more than 60 days (wall)
- Is installed by or under guidance of Licensed Building Practitioners.
- Is compatible with cladding system used.*

* **Note:** specifiers and product users must test for roof cladding system compatibility with the underlay before installation.

Covertek 405

Self-supporting roof and wall underlay

Control of Condensation

In climatic regions where condensation risks are high, such as cold or high humidity areas, care needs to be taken in specifying the correct design and installation to prevent moisture build-up in the roof cavities.

Factors which adversely affect the condensation risk in roofing systems include:

- Humid, and/or cold climatic regions.
- Warm/Skillion roof construction.
- Low roof cavity air volume and restricted air movement.
- Omitting Vapour Control Layers.
- Occupancy activities which have high moisture loading on conditioned spaces.
- Ceiling penetrations and entry of warm air into roof cavities.
- Low pitched roof.
- Bulk insulation.
- Building structures ability to naturally dry construction moisture.

Skillion and Warm Roof Construction are particularly sensitive to moisture accumulation and the design and installation of roof construction needs to take into account the higher condensation risks. Refer to the NZ Metal Roof and Wall Cladding Code of Practice (COP) for details.

For passive ventilation of the roof space, it is recommended that all roof underlays are terminated at the ridge, and if not it should be slit or slotted to allow for passive ventilation. For further information refer to the NZ Metal Roof and Wall Cladding COP.

Property Performance

NZBC E2/AS1 Table 23 (NZS2295) Wall Underlay Properties	Absorbency	Vapour Resistance	pH of Extract	Shrinkage	Water Resistance	Air Resistance
Property Performance Requirement	≥ 150gsm	≤ 0.5 MN.s/g	≥ 5.5 and ≤ 8	≤ 0.5%	≥ 100mm	≥ 0.1 MN.s/m3
Property Performance	Pass	Pass	Pass	Pass	Pass	Pass*

* **Note:** Can be used as an air barrier.

Product Warranty

Standard Thermakraft warranty applies. Refer to Thermakraft Warranty Statement for further details. This is available online at **thermakraft.co.nz** or call **0800 806 595.**

Thermakraft Limited / 0800 806 595

Smarter products. Better buildings.

thermakraft.co.nz

CodeMark GM-CM30030

BRANZ Appraised
Appraisal No.743 [2019]

The recommendations contained in Thermakraft's literature are based on good building practice, but are not an exhaustive statement of all relevant information and are subject to any conditions contained in the Warranty. All product dimensions and performance claims are subject to any variation caused by normal manufacturing process and tolerances. Furthermore, as the successful performance of the relevant system depends on numerous factors outside the control of Thermakraft (for example quality of workmanship and design), Thermakraft shall not be liable for the recommendations in that literature and the performance of the Product, including its suitability for any purpose or ability to satisfy the relevant provisions of the Building Code, regulations and standards. Literature subject to change without notification. Latest documentation can be found on the website. E&OE.

Issue 5, September 2020

Roof Safe Mesh Galvanised Steel

Product Technical Statement

SUMMARY OF FEATURES

- A welded galvanised steel wire mesh used as a support for roofing underlays and insulation. It also provides a safety net against falls during initial roof installation and for ongoing maintenance work.
- Suitable for both timber and steel structures.
- Complies with Safety Mesh Standard AS/NZS 4389: 2015.

TECHNICAL INFORMATION

Product Description

Kiwimesh Roof Safe Mesh consists of a welded, mild steel wire mesh with longitudinal wires spaced at 150mm centres and cross wires spaced at 300mm centres.

It is comprised of a 2.0mm diameter galvanised wire with a tensile strength exceeding 450mpa. T

Applications

- Provides fall-through protection during roof installation and ongoing maintenance.
- Suitable for use on timber and steel framing.

Technical Data

Complies with Safety Mesh Standard AS/NZS 4389: 2015:

Limitations

Not to be used for access or as a working platform.

Handling & Storage

Rolls must be stored on end, under cover and protected from moisture. Do not double stack or use to support other materials. Rolls must not be stored on concrete floors for long periods.

Size Range Available

Fixing instructions

Before installation check with the local code of practice for safe work on roofs.

Transverse wires shall be on top of the longitudinal wires.

All longitudinal wires are passed around anchor points with the tail of each wire being twisted four times around the main portion of the same wire.

End joints in wire, two transverse wires are placed together, the longitudinal tail wires (approx 300mm long) are tied around each other, one being twisted four times around the main portion of the same wire, the other longitudinal wire twisted once around the main portion of the same wire then four times around two transverse wires.

Side laps (i) For purlin spacing/span less than 1200mm, the runs of mesh shall be side-lapped by a minimum of one mesh spacing (150mm). (ii) For purlin spacing/span between 1200-2200mm, the runs of mesh shall be side-lapped by a minimum of one mesh spacing (150mm). Side laps shall be secured with ring fasteners fabricated from minimum 1.90mm diameter wire, or equivalent, fitted at maximum 900mm centres between each purlin on one side of the lap. (iii) For purlin spacing/span greater than 2200mm, the runs of mesh shall be side-lapped by a minimum of two mesh spacing (300mm). Side laps shall be secured with ring fasteners fabricated from minimum 1.90mm diameter wire, or equivalent, fitted at maximum 600mm centres between purlin/span on both sides of the lap.

Tautness. Mesh shall be pulled taut to ensure only natural sag between each purlin or roof member.

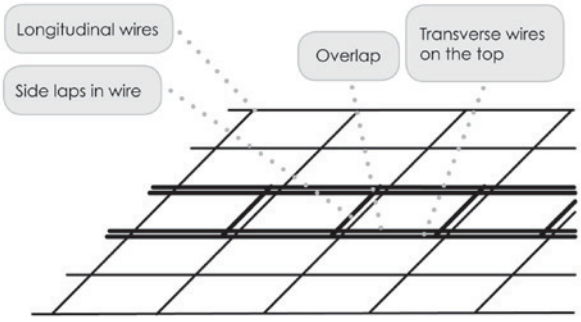

End joints

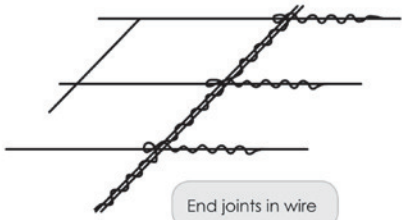

End joints in wire

Steel and timber purlins

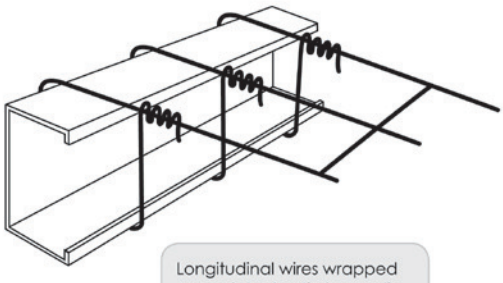

Longitudinal wires wrapped around steel or timber purlin.

Steel purlins

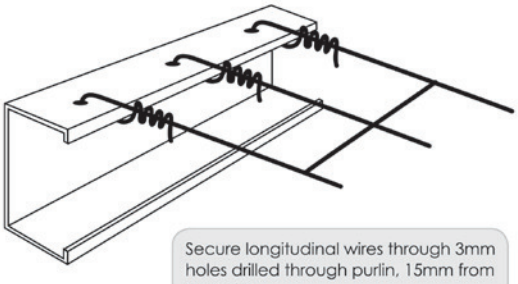

Secure longitudinal wires through 3mm holes drilled through purlin, 15mm from the edge.

Timber purlins

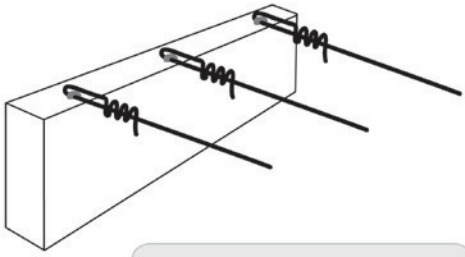

Secure longitudinal wire in position with 40mm long x 3.15mm diameter staples.

KIWIMESH

PAUL Industries

Wall Sheeting

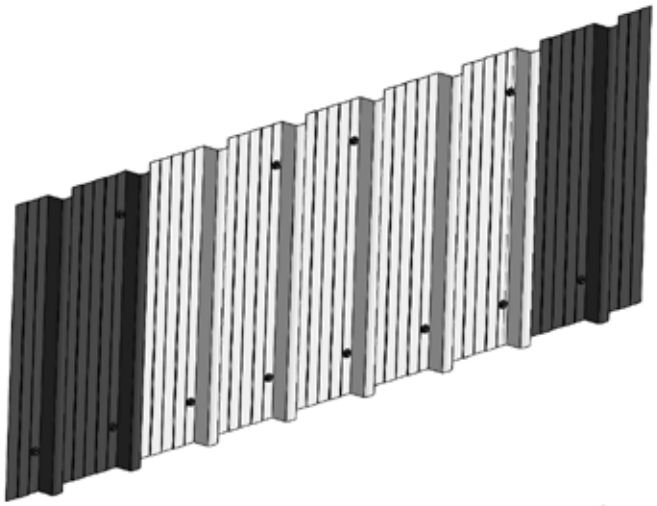

WS1

6 Rib

The cladding for wall sheeting shall be fixed with Cladding Hex Tek #10x16 with neo washers to all walls. On middle girts tek beside every join then miss one, place two. On bottom / top girts tek every pan.

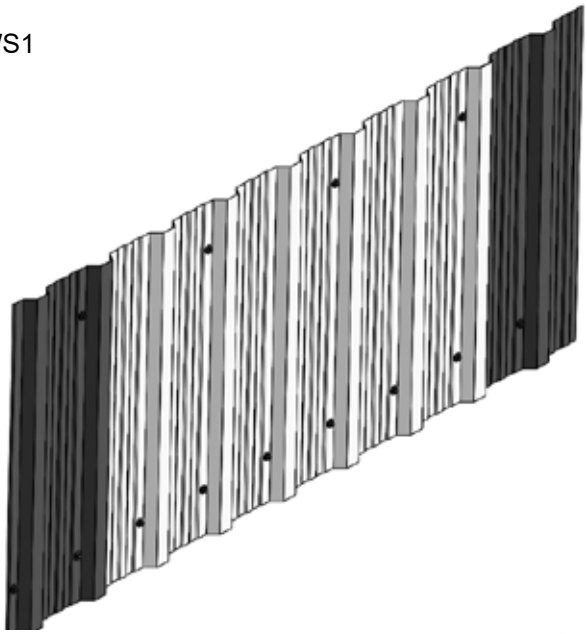

WS2

7 Rib

The cladding for wall sheeting shall be fixed with Cladding Hex Tek #10x16 with neo washers to all walls. On middle girts tek beside every second rib. On bottom / top girts tek every pan.

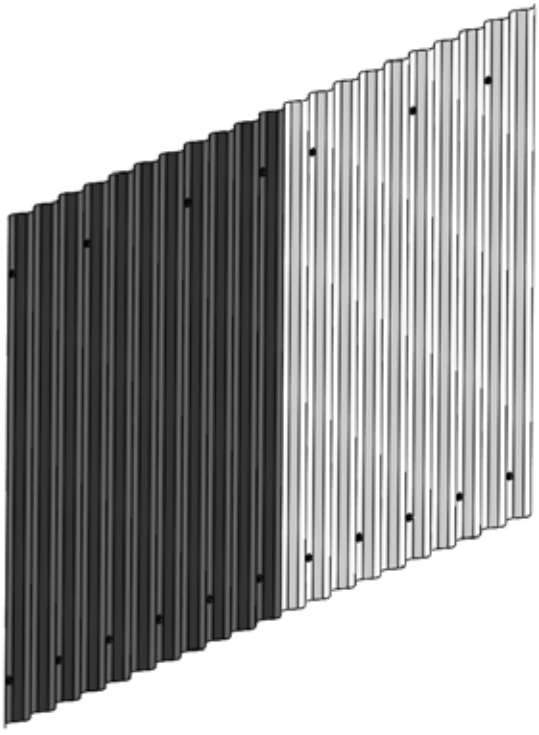

WS3

Corrugate

The cladding for wall sheeting shall be fixed with Cladding Hex Tek #10x16 with neo washers to all walls. On middle girts tek beside every join then miss two, tek one, miss three, tek one. On bottom / top girts tek every second pan.

Roof Sheeting

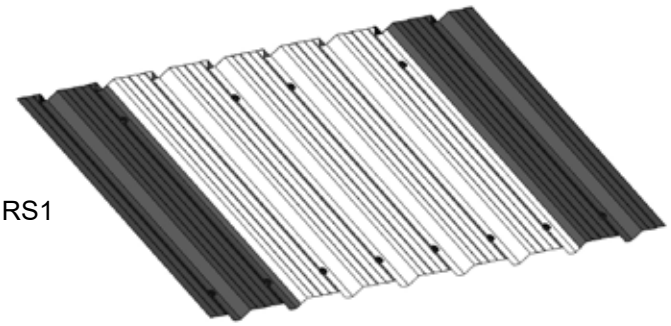

RS1

6 Rib

The cladding for roof sheeting shall be fixed using Cladding Hex Tek #12x45 to all purlins, except the ridge purlin, and extend 50mm into the gutter.

On middle purlins tek rib on every join then miss one, place two. On gutter purlin tek every rib.

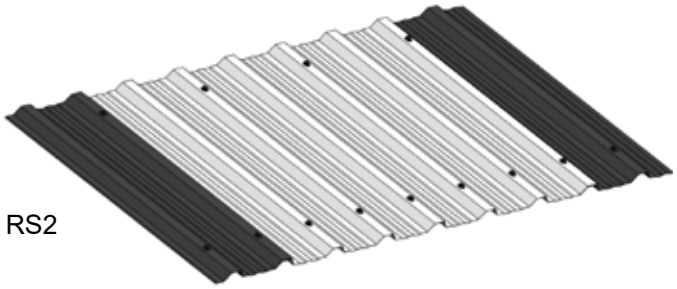

RS2

7 Rib

The cladding for roof sheeting shall be fixed with Cladding Hex Tek #12x35 to all purlins, except the ridge purlin, and extend 50mm into the gutter.

On middle purlins tek every second rib. On gutter purlins tek every rib.

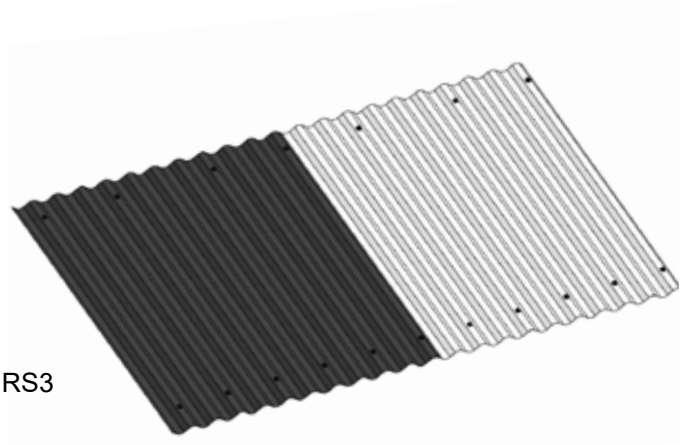

RS3

Corrugate

The cladding for roof sheeting shall be fixed with Cladding Hex Tek #12x35 to all purlins, except the ridge purlin, and extend 50mm into the gutter.

On middle purlins tek on rib at every join then miss two, tek one, miss three, tek one. On gutter purlins tek every second rib.

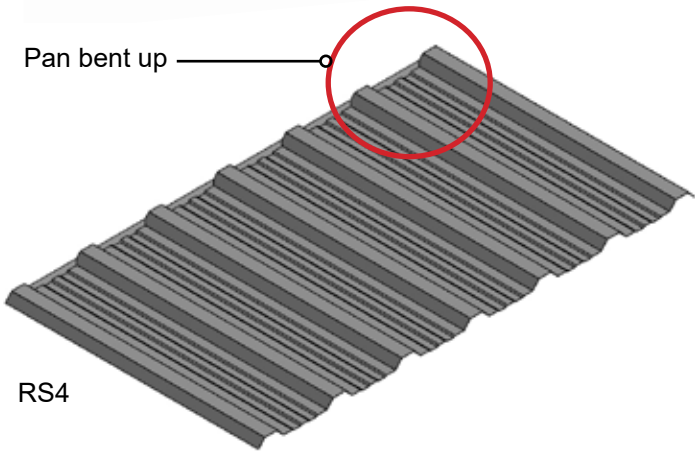

RS4

Pan Detail to Ridge

Roof Sheeting to have pans bent up, as shown, to ridge end. Use a crescent if no suitable bending tool is available.

Translucent Sheet Fixing Details

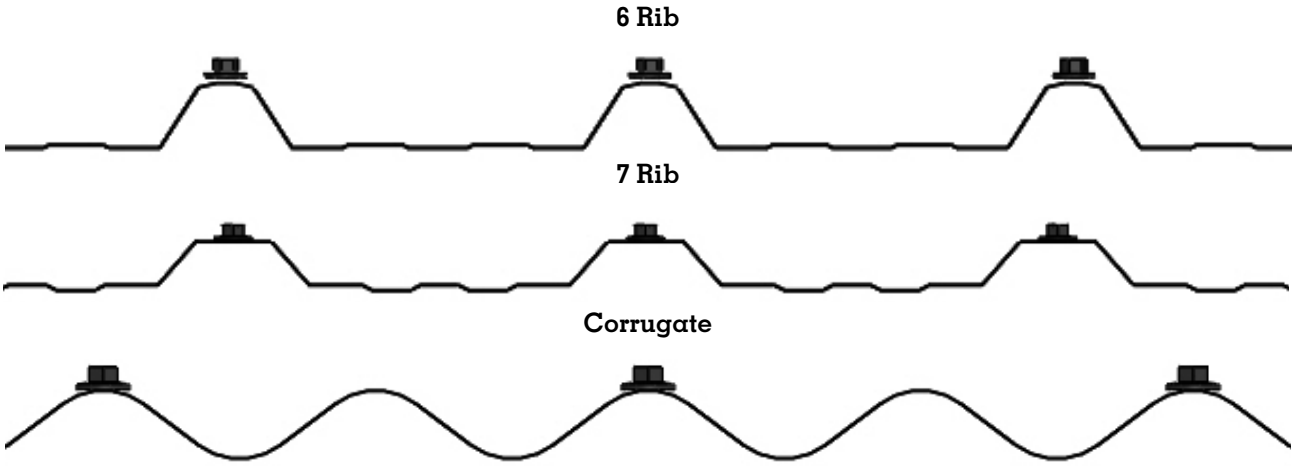

Where wire safety mesh is incorporated under the translucent roof sheeting and where the safety mesh passes over the supporting purlin directly under the fiberglass sheeting, a Protective Purlin Strip (flat fiberglass strip of minimum 1.1mm thickness) must be installed between the translucent sheeting and the safety mesh.

Inseal foam infill to be installed on top of the translucent sheet at the ridge top and ridge fastened over this to provide additional weather sealing.

Site Laps

Each individual translucent sheet is manufactured to overlap and be supported by the adjacent roof or wall cladding sheet.

Fastening Procedure

- In roofing applications, fixings shall be installed through the crest of any profile. Due to the larger expansion and contraction rates of translucent sheeting, oversized fixing holes must be predrilled. Installers must ensure that the fastener is located in the centre of the oversize hole or the benefit of the larger hole is lost. The recommended calculation to ensure the correct hole size used is - 0.75mm per lineal metre, plus the shank size of the fastener. This should be: 7.84 (sheet length) x 0.75=5.88 + 4.5mm (shank size of translucent tek) = 10.38mm 10.5mm holes to be drilled for a 15m span building
- Install screws into translucent sheet in the same manner as metal
- When completed, remove fixings from translucent sheet.
- Using the existing screw hole as a guide, re-drill over sizing the hole
- Re-install the fixing screw. (Note how the screw is centrally located in the hole.)
- It is important not to over tighten the screw putting undue pressure on the translucent sheet. Use only enough pressure that that the translucent fixing screw seal is contoured to the shape of the rib but the rib retains its shape without any sign of buckling.

Note – Top washer is too tight, bottom washer is ok.





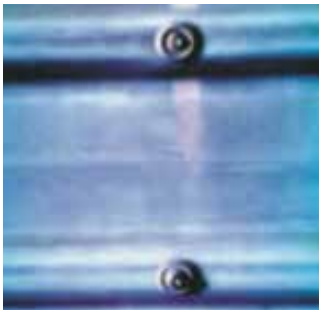

Translucent Sheet Fixing Details contd.

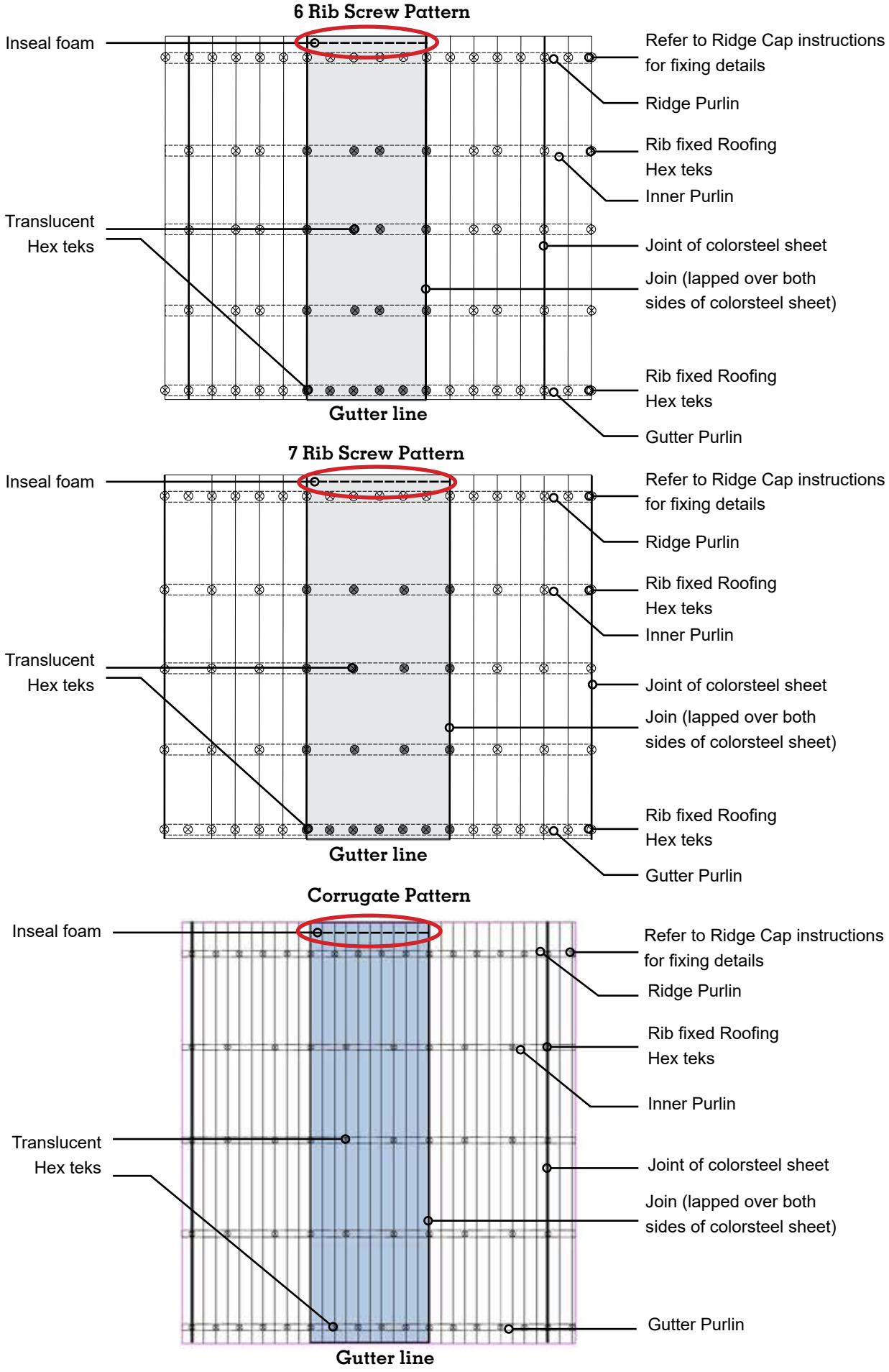

11-4-2025

Hurunui District Council
P O Box 13
Amberley 7441

To Whom It May Concern

RE: TOTALSPAN BUILDING PROJECT IL1

I , Don Campbell, of 7 Swindon Lane, Amberley, acknowledge and agree that my slab will have a finished floor level of 100mm. This level is taken from the highest point of the cleared building site. It has been explained to me what the Council recommendation is (100mm minimum)

Signed: X 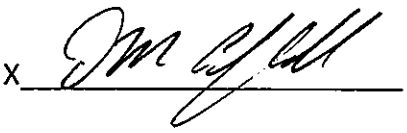 X

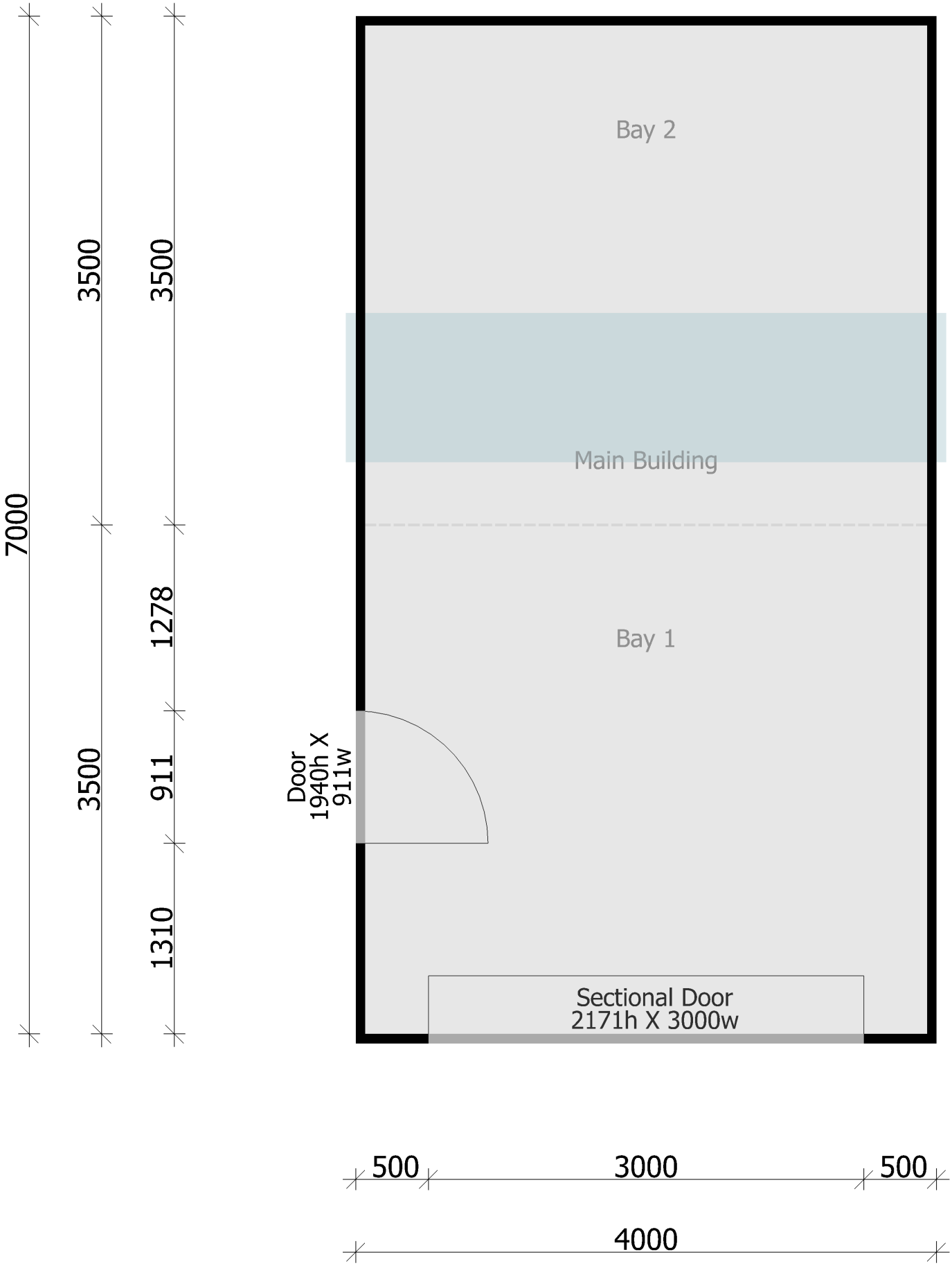

* All Dimensions in mm. Colours shown are examples only. For exact colour samples see your local Totalspan North Canterbury representative.
'NOTE' Drawings are not construction issue. Shop drawings (For Construction) will be detailed prior to fabrication.

Petersen Construction Ltd
127 Main North Road, , Woodend, 7641, New Zealand
Phone: 033100247
Email: northcanterbury@totalspan.co.nz

For:
Don Campbell
7 Swindon Lane

Amberley,
7410

Gable Range
Project Number: JH.309

11 Apr 2025

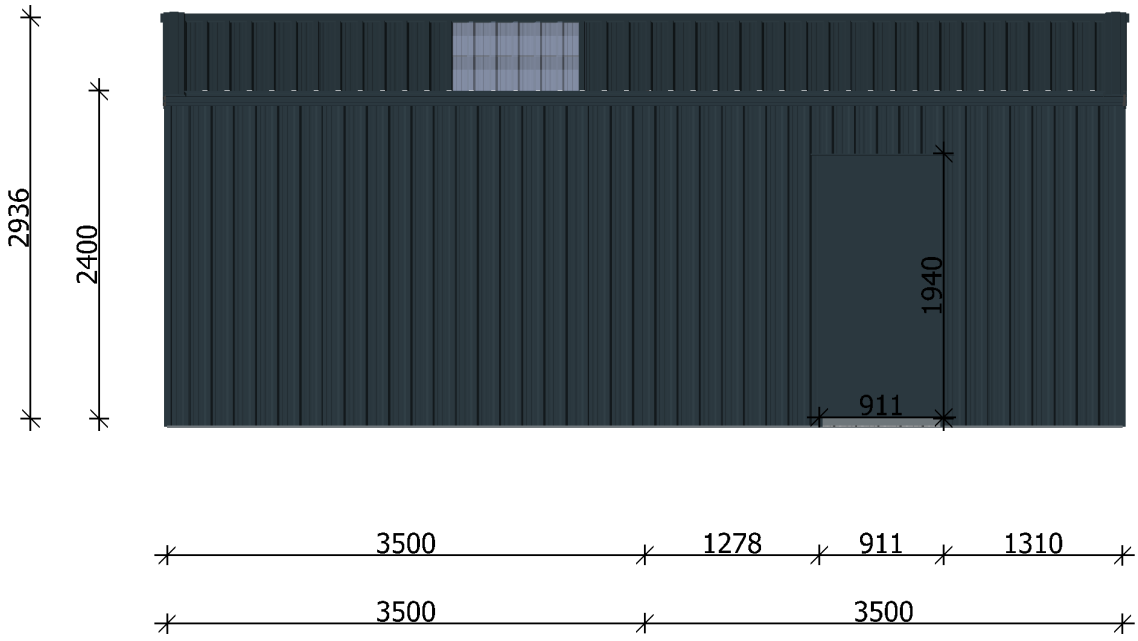

* All Dimensions in mm. Colours shown are examples only. For exact colour samples see your local Totalspan North Canterbury representative.

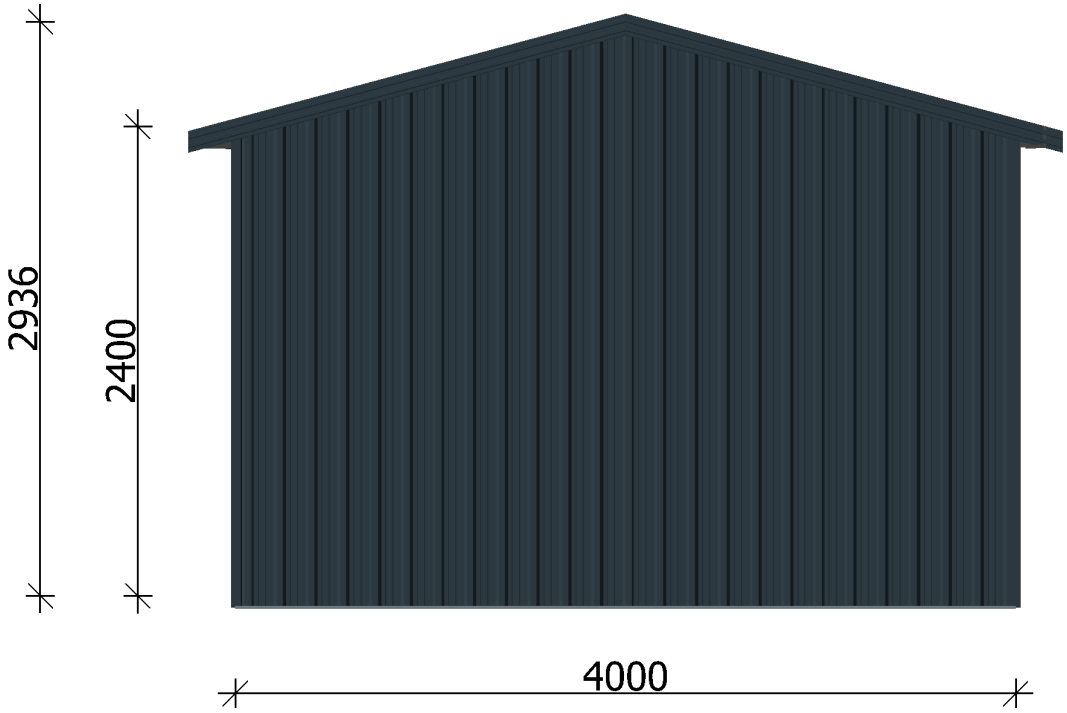

* All Dimensions in mm. Colours shown are examples only. For exact colour samples see your local Totalspan North Canterbury representative.
'NOTE' Drawings are not construction issue. Shop drawings (For Construction) will be detailed prior to fabrication.

Petersen Construction Ltd
127 Main North Road, , Woodend, 7641, New Zealand
Phone: 033100247
Email: northcanterbury@totalspan.co.nz

For:
Don Campbell
7 Swindon Lane

Amberley,
7410

Gable Range
Project Number: JH.309

11 Apr 2025

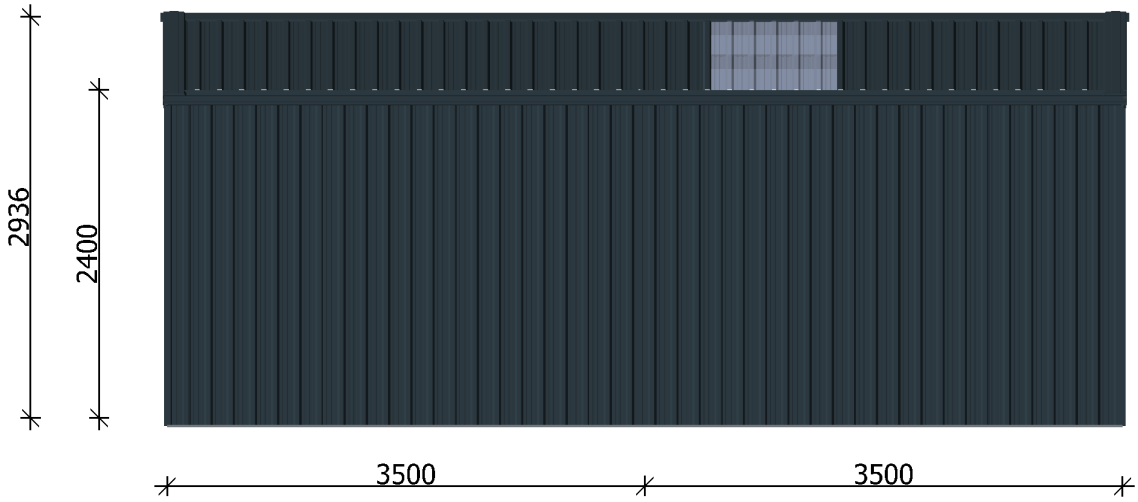

* All Dimensions in mm. Colours shown are examples only. For exact colour samples see your local Totalspan North Canterbury representative.

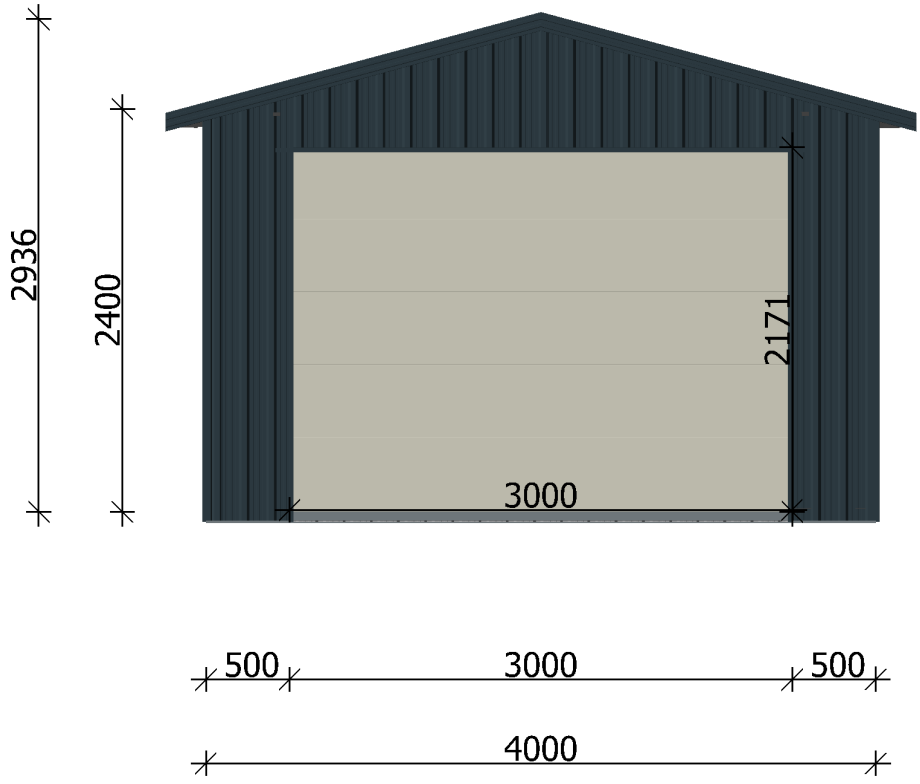

* All Dimensions in mm. Colours shown are examples only. For exact colour samples see your local Totalspan North Canterbury representative.
'NOTE' Drawings are not construction issue. Shop drawings (For Construction) will be detailed prior to fabrication.

Petersen Construction Ltd
127 Main North Road, , Woodend, 7641, New Zealand
Phone: 033100247
Email: northcanterbury@totalspan.co.nz

For:
Don Campbell
7 Swindon Lane

Amberley,
7410

Gable Range
Project Number: JH.309

11 Apr 2025

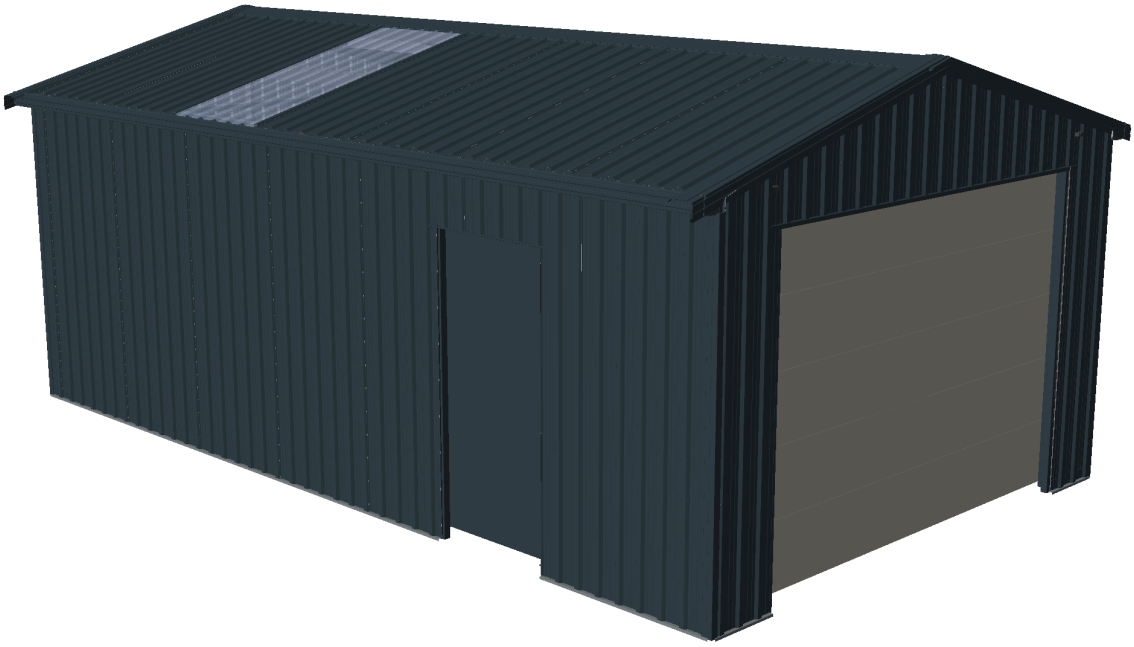

* All Dimensions in mm. Colours shown are examples only. For exact colour samples see your local Totalspan North Canterbury representative.

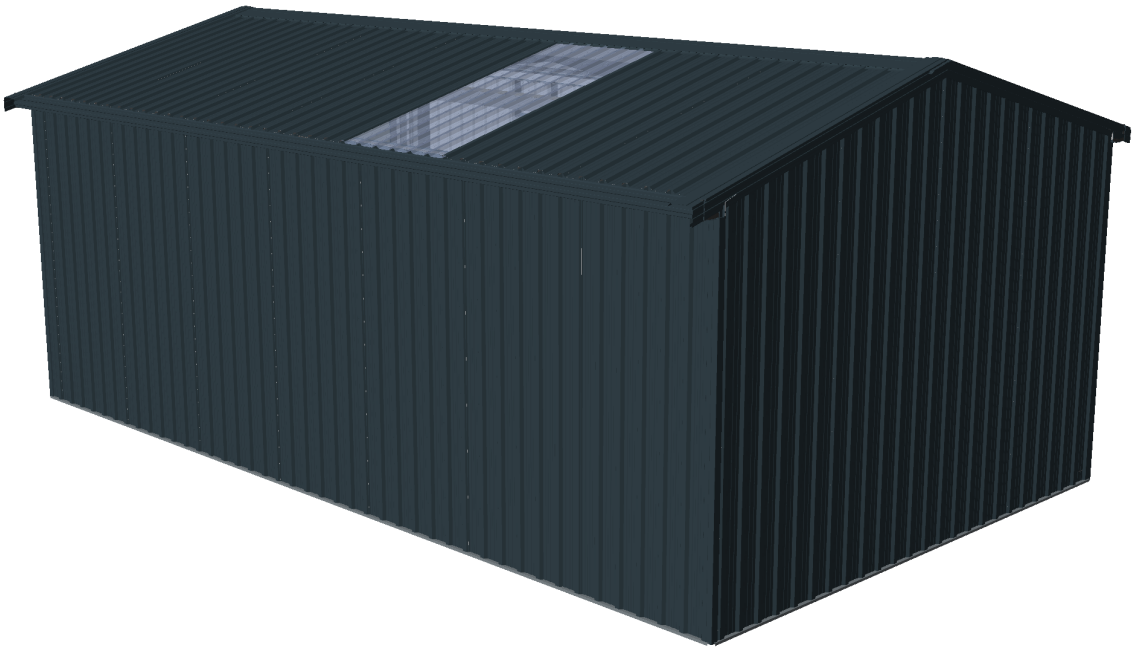

* All Dimensions in mm. Colours shown are examples only. For exact colour samples see your local Totalspan North Canterbury representative.
'NOTE' Drawings are not construction issue. Shop drawings (For Construction) will be detailed prior to fabrication.

Petersen Construction Ltd
127 Main North Road, , Woodend, 7641, New Zealand
Phone: 033100247
Email: northcanterbury@totalspan.co.nz

For:
Don Campbell
7 Swindon Lane

Amberley,
7410

Gable Range
Project Number: JH.309

11 Apr 2025

Canterbury Maps

Information has been derived from various organisations, including Environment Canterbury and the Canterbury Maps partners. Boundary information is derived under licence from LINZ Digital Cadastral Database (Crown Copyright Reserved). Environment Canterbury and the Canterbury Maps partners do not give and expressly disclaim any warranty as to the accuracy or completeness of the information or its fitness for any purpose.

Information from this map may not be used for the purposes of any legal disputes. The user should independently verify the accuracy of any information before taking any action in reliance upon it.

N

0 0 0 0 0 Kilometres

Scale: 1:100 @A3

Map Created by Canterbury Maps on 15/04/2025 at 1:55 PM

7 Swndon Lane
Amberley

9

7

1200

Front

7 x 4 garage

Storm water to soak pit via 2 x 80mm downpipes to 100mm uPVC pipe

Soak pit details and calcs by NC Drainage

1200

1200

Environment Canterbury, Waimakariri DC, LINZ, Environment Canterbury

Canterbury Maps

Information has been derived from various organisations, including Environment Canterbury and the Canterbury Maps partners. Boundary information is derived under licence from LINZ Digital Cadastral Database (Crown Copyright Reserved). Environment Canterbury and the Canterbury Maps partners do not give and expressly disclaim any warranty as to the accuracy or completeness of the information or its fitness for any purpose.

Information from this map may not be used for the purposes of any legal disputes. The user should independently verify the accuracy of any information before taking any action in reliance upon it.

N

0 0 0 0 0 Kilometres

Scale: 1:100 @A3

Map Created by Canterbury Maps on 15/04/2025 at 1:55 PM

7 Swndon Lane
Amberley

9

7

1200

Front

7 x 4 garage

Storm water to soak pit via 2 x 80mm downpipes to 100mm uPVC pipe

Soak pit details and calcs by NC Drainage

1200

1200

Environment Canterbury, Waimakariri DC, LINZ, Environment Canterbury

Canterbury Maps

Information has been derived from various organisations, including Environment Canterbury and the Canterbury Maps partners. Boundary information is derived under licence from LINZ Digital Cadastral Database (Crown Copyright Reserved). Environment Canterbury and the Canterbury Maps partners do not give and expressly disclaim any warranty as to the accuracy or completeness of the information or its fitness for any purpose.

Information from this map may not be used for the purposes of any legal disputes. The user should independently verify the accuracy of any information before taking any action in reliance upon it.

N

0 0 0 0 0 Kilometres

Scale: 1:300 @A3

Map Created by Canterbury Maps on 15/04/2025 at 1:58 PM



Notes,

1. FFL to be a minimum of 100mm above highest point of cleared ground.

2. Saw cuts in red.

3. Refer to engineers PS1 for all slab construction details.

CONTRACTOR TO VARIFY ALL DIMENSIONS PRIOR TO STARTING. ALL DIMENSIONS MM UNLESS STATED.

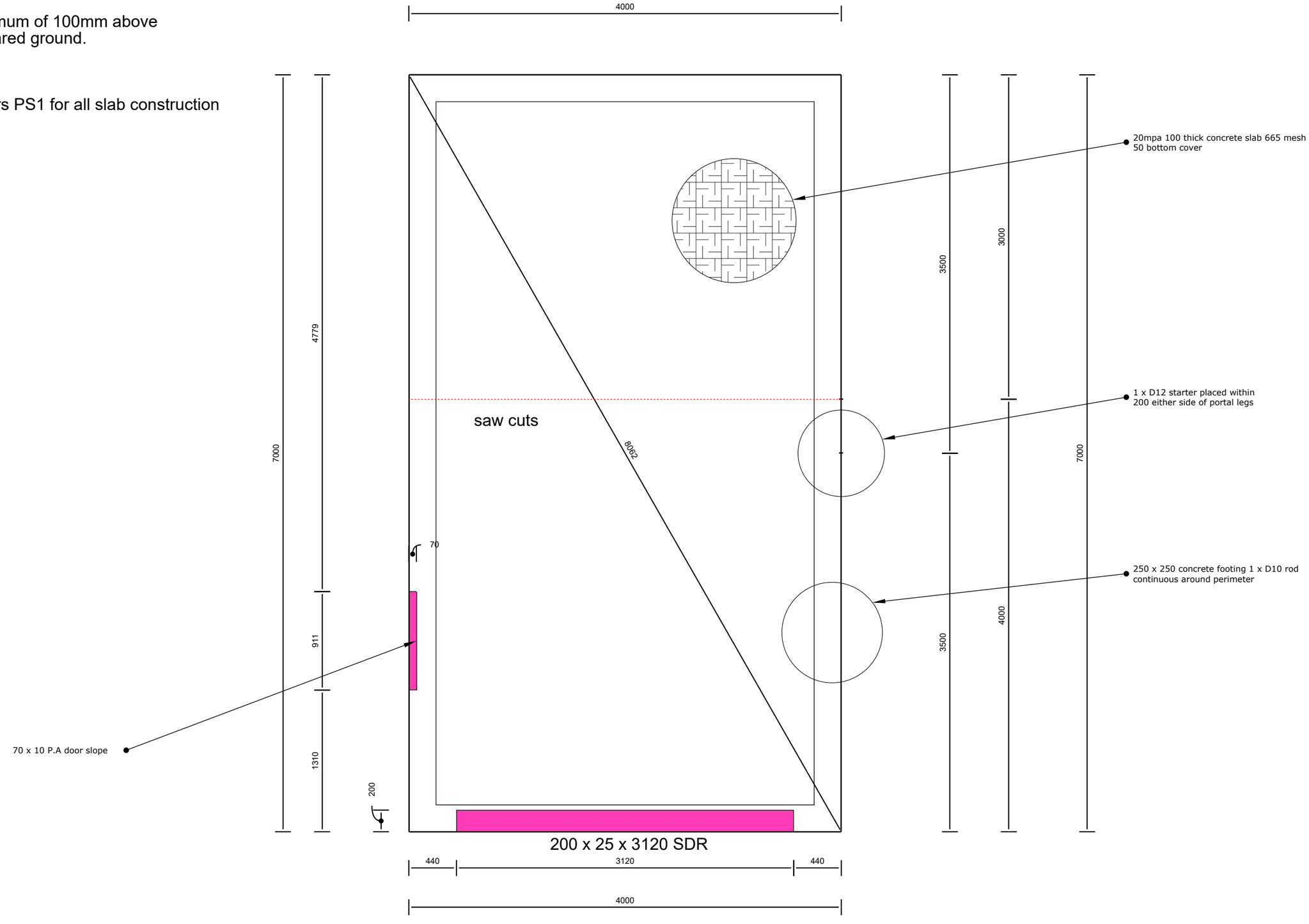

TOTALSPAN
STEEL BUILDINGS
WHO CAN? TOTALSPAN!

BUILDING PROPOSED FOR:

Don Campbell
7 Swindon Lane
Amberley, 7410

DRAWING TITLE:

Slab Plan

DRAWN: JWP

SCALE: NTS

DATE: 15/4/2025

NOTICE ID: 500001 DATE SENT: 03-03-2025 Required under section 31 Local Government (Rating) Act 2002

Notification of change of ownership of rating unit

Territorial/Unitary authority	Hurunui District Council
Regional council	Environment Canterbury
Other	-

Valuation reference	21430-11114
Address of property	7 Swindon Lane, Hurunui District

Record of title	CB45C/43
Estate	Fee Simple
Area	1260 square metres more or less
Legal description	Lot 6 Deposited Plan 79189

Instrument type	Transfer
Instrument number	13209245.1
Relates only to part of a title?	No
Nature of transaction	Open market sale at arm's length

Date of agreement	04-12-2024
Settlement date	03-03-2025

Gross consideration	$835,000.00
GST	Inclusive of GST
If GST is payable	-
Value of land and buildings	-

Existing owners
Susanne ENSOR
Christopher John ENSOR
Sarah Margaret GREENSLADE
HBS Trustees No 101 Limited

New owners
Donald Melvern CAMPBELL
Alison Teresa CAMPBELL

Postal Address
7 Swindon Lane, Amberley 7410

Contact details
★ alidonz@gmail.com
0211521186

Make names and postal address private?
No

Acting for existing owner
Mia Louise Hofsteede | HELMORES
mia@helmores-law.co.nz
64033118008

Acting for new owners
Leanne Watson | KAIMAI LAW KATIKATI LIMITED
leanne@klk.nz
075494890

New owners' first instalment?	instalment 3, 24/25
Lessee is the ratepayer?	No

Disclaimer
Toitu Te Whenua (LINZ) facilitates conveyancing professionals to provide a Notice of Change of Ownership (NoC) required under section 31 of the Local Government (Rating) Act 2002 to the applicable Council. This will ensure new owners receive all future rating notices for that property. Questions about this duty to advise changes of ownership to Council should be directed to the Council or the conveyancing professional who undertook the transaction.

NOTICE ID: 408059 DATE SENT: 12-08-2024 Required under section 31 Local Government (Rating) Act 2002

Notification of change of ownership of rating unit

Territorial/Unitary authority	Hurunui District Council
Regional council	Environment Canterbury
Other	-

Valuation reference	21430-11114
Address of property	7 Swindon Lane, Hurunui District

Record of title	CB45C/43
Estate	Fee Simple
Area	1260 square metres more or less
Legal description	Lot 6 Deposited Plan 79189

Instrument type	Transfer
Instrument number	12855314.1
Relates only to part of a title?	No
Nature of transaction	Change of trustee(s)

Effective date	-

Existing owners
Susanne ENSOR
Christopher John ENSOR
HBS Trustees No 101 Limited

New owners
Susanne ENSOR
Christopher John ENSOR
Sarah Margaret GREENSLADE
HBS Trustees No 101 Limited

Postal Address
J & S Ensor Family Trust
★ 7 Swindon Lane, Amberley 7410

Contact details
ensors12@gmail.com
033418284

Make names and postal address private?
No

Acting for existing owner
Michelle Mary Ewart | HELMORES
michelle@helmores-law.co.nz
033118008

Acting for new owners
Michelle Mary Ewart | HELMORES
michelle@helmores-law.co.nz
033118008

New owners' first instalment?	-
Lessee is the ratepayer?	No

Disclaimer
Toitu Te Whenua (LINZ) facilitates conveyancing professionals to provide a Notice of Change of Ownership (NoC) required under section 31 of the Local Government (Rating) Act 2002 to the applicable Council. This will ensure new owners receive all future rating notices for that property. Questions about this duty to advise changes of ownership to Council should be directed to the Council or the conveyancing professional who undertook the transaction.