PROPOSED HOUSE, UNIT 13 AT 36 BORMAN ROAD, HAMILTON

HAMILTON CITY COUNCIL
BUILDING UNIT
APPROVED
SUBJECT TO CONDITIONS
TO BE KEPT ON SITE

SITE PLANS

SHEET No.	SHEET NAME:
1.1	SITE DEVELOPMENT PLAN
1.2	SITE DRAINAGE PLAN

FLOOR PLANS

SHEET No.	SHEET NAME:
2.1	GROUND FLOOR PLAN
2.2	DIMENSIONED GROUND FLOOR PLAN
2.3	UPPER FLOOR PLAN
2.4	DIMENSIONED UPPER FLOOR PLAN
2.5	FOUNDATION & PLUMBING PLAN
2.6	DIMENSIONED FOUNDATION PLAN
2.7	MID-FLOOR JOIST & PLUMBING PLAN
2.8	ROOF PLAN
2.9	GROUND FLOOR BRACING PLAN
2.10	UPPER FLOOR BRACING PLAN
2.11	GROUND FLOOR ELECTRICAL PLAN
2.12	UPPER FLOOR ELECTRICAL PLAN

ELEVATIONS

SHEET No.	SHEET NAME:
3.1	NORTH & SOUTH ELEVATIONS
3.2	EAST & WEST ELEVATIONS

SECTIONS

SHEET No.	SHEET NAME:
4.1	CROSS SECTION AA
4.2	CROSS SECTION BB
4.3	CROSS SECTION CC
4.4	CROSS SECTION DD

DETAILS

SHEET No.	SHEET NAME:
5.1	CONSTRUCTION DETAILS 1
5.2	CONSTRUCTION DETAILS 2
5.3	CONSTRUCTION DETAILS 3

DETAILS

SHEET No.	SHEET NAME:
5.4	CONSTRUCTION DETAILS 4
5.5	CONSTRUCTION DETAILS 5
5.6	CONSTRUCTION DETAILS 6
5.7	TYPICAL CLADDING DETAILS
5.8	TYPICAL METERBOX & WINDOW DETAILS
5.9	TYPICAL WINDOW DETAILS
5.10	TYPICAL WET AREA DETAILS
5.11	TYPICAL FIXING DETAILS 1
5.12	TYPICAL FIXING DETAILS 2
5.13	TYPICAL DRAINAGE DETAILS

ARTISTS IMPRESSION

Issue:	Date:	Description:
WDI	27/07/17	WORKING DRAWINGS FOR BUILDING CONSENT
DD	12/06/17	DEVELOPED DESIGN
DRAFT RC	25/11/16	DRAFT RESOURCE CONSENT APPLICATION

BYRNE+ENRIGHT ARCHITECTURE LTD

PO BOX 28162 ROTOTUNA, HAMILTON.
PH (07) 839 5774
LICENSED ARCHITECTURAL DESIGNERS
E-MAIL admin@designers.net.nz
WEB www.designers.net.nz

LICENSED BUILDING PRACTITIONER www.dbh.govt.nz BUILDING CONFIDENCE

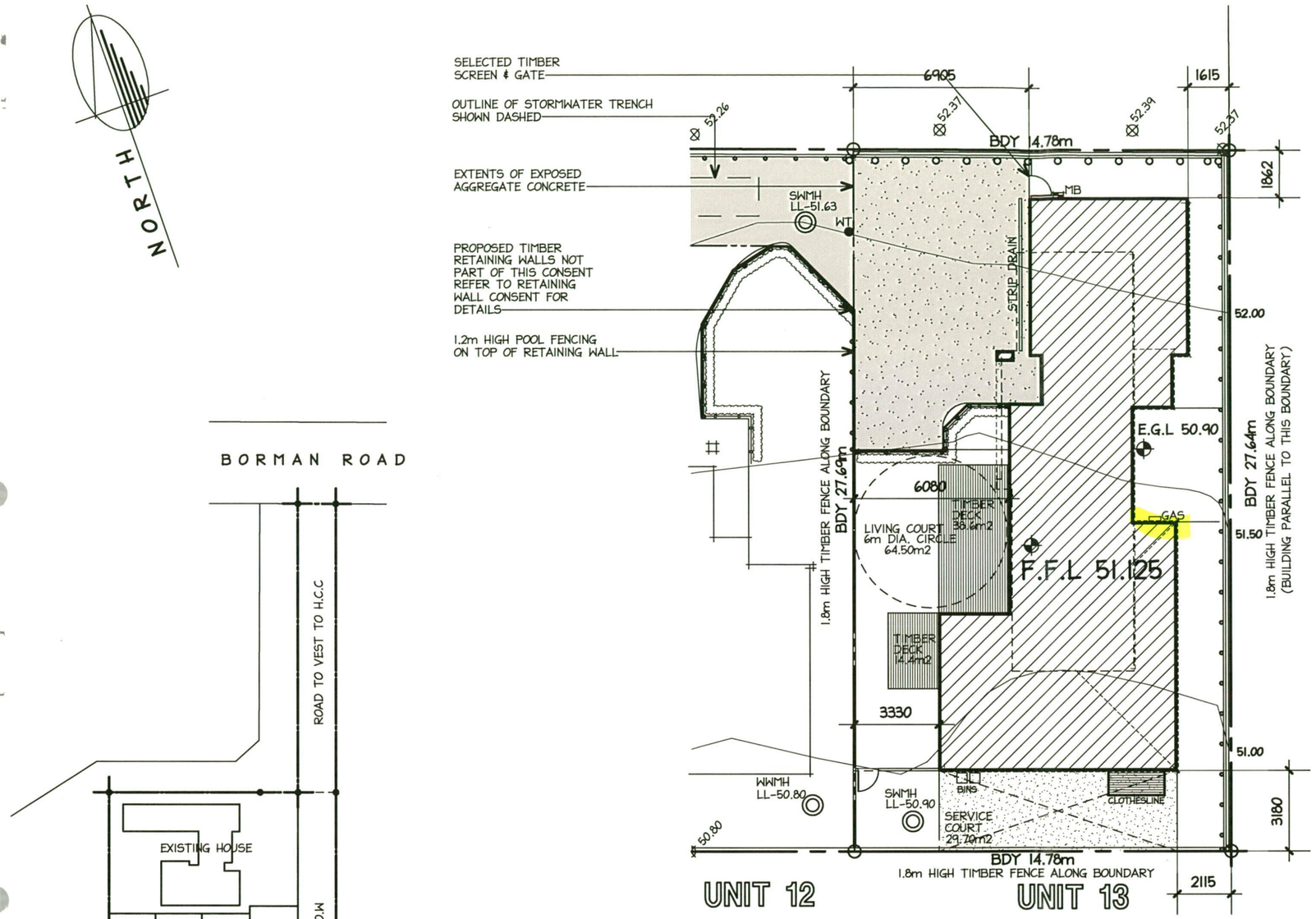

SITE DEVELOPMENT PLAN

LEGAL DESCRIPTION:
PROPOSED UNIT 13 OF LOT 100 DP 512199

AREA = UNIT 13 - 408m2

TOTAL AREA = 408m2

REFER TO L.U.C DRAWINGS FOR ALL SITE COVERAGE CALCULATIONS

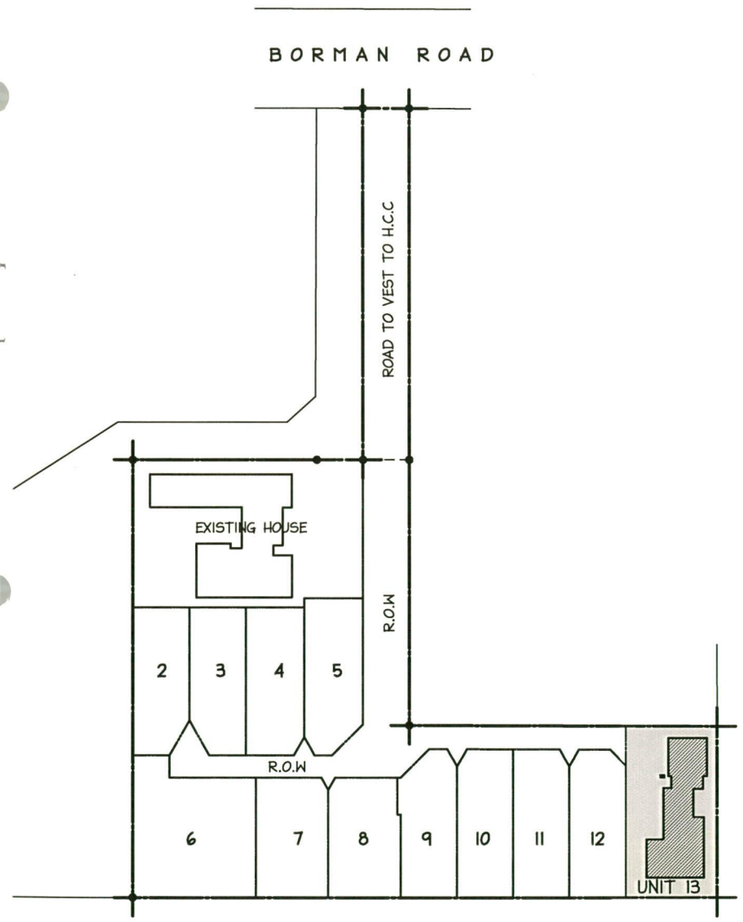

SITE LOCALITY PLAN

SCALE 1:1000

NOTES:

LOCATE ALL BOUNDARY PEGS PRIOR TO COMMENCING SETOUT

BOUNDARY SETBACKS ARE TO FOUNDATION FACE WHERE APPLICABLE

SURVEYOR TO ESTABLISH FLOOR LEVELS ON SITE PRIOR TO COMMENCING SETOUT TO ENSURE COMPLIANCE WITH DISTANCE & HEIGHT TO BOUNDARIES.

FINISHED FLOOR LEVEL (F.F.L) SHALL BE A MINIMUM OF 225mm ABOVE GROUND LEVEL WITH A MINIMUM OF 175mm ABOVE SEALED SURFACES. (AT GARAGE & DOOR THRESHOLDS, THE GROUND CAN BE LOCALLY SLOPED UP TO THE APPROVED LEVEL, ENSURING TO COMPLY WITH NZ BUILDING CODE ACCESS REQUIREMENTS.)

KEY:

● WT	WATER TOBY
FFL	FINISHED FLOOR LEVEL
EGL	EXISTING GROUND LEVEL
LL	LID LEVEL
WWMH	WASTEWATER MANHOLE
SWMH	STORMWATER MANHOLE
GAS	SELECTED GAS HOT WATER UNIT
MB	METER BOX
	TREE
	PROPOSED TIMBER RETAINING WALL (NOT PART OF THIS CONSENT)
	SELECTED TIMBER SCREEN BETWEEN UNITS
	1.2m HIGH ALUMINIUM 'POOL' FENCING
	SELECTED PLANTING

PLANNING NOTES:

TERRITORIAL AUTHORITY:	HAMILTON CITY COUNCIL
PLANNING ZONE:	OPD: ROTOTUNA RESIDENTIAL ZONE PDP: GENERAL RESIDENTIAL ZONE
WIND ZONE:	MEDIUM
EARTHQUAKE ZONE:	ZONE 1
EXPOSURE ZONE:	ZONE B
FLOOD HAZARDS:	NONE IDENTIFIED
MAXIMUM SITE COVERAGE:	40%

CONCRETE NOTE:

PEBBLED AREA

SEALED EXPOSED AGGREGATE CONCRETE WITH DARK OXIDE TO DRIVEWAY & FRONT PATHS

SEALED COLOURED CONCRETE TO R.O.W

THIS PLAN IS TO BE READ IN CONJUNCTION WITH APPROVED LAND USE CONSENT NO. 010.2017.9124.001

REFER TO LANDSCAPING PLAN PREPARED BY WENDY TWINE

THIS PLAN IS TO BE READ IN CONJUNCTION WITH ENGINEERING PLANS PREPARED BY CKL ENGINEERING CONSULTANTS

HAMILTON CITY COUNCIL
BUILDING UNIT
APPROVED
SUBJECT TO CONDITIONS
TO BE KEPT ON SITE

BYRNE+ENRIGHT ARCHITECTURE LTD
PO BOX 28162, ROTOTUNA, HAMILTON.
PH (07) 839 5774, Email:admin@designers.net.nz
LICENSED ARCHITECTURAL DESIGNERS
www.designers.net.nz

LICENSED BUILDING PRACTITIONERS www.dbh.govt.nz BUILDING CONFIDENCE

Issue:	Date:	Description:
WDI	27/07/17	WORKING DRAWINGS FOR BUILDING CONSENT
DD	12/06/17	DEVELOPED DESIGN
DRAFT RC	25/11/16	DRAFT RESOURCE CONSENT APPLICATION

job: PROPOSED HOUSE, UNIT 13 AT 36 BORMAN ROAD, HUNTINGTON, HAMILTON.

sheet: SITE DEVELOPMENT PLAN

date: 08/08/17

scale: 1:200

design: P.E

drawn: P.B

COPYRIGHT
Contractor to check and verify all levels and dimensions on site prior to commencing work. Do not scale off drawings. All drawings and documentation remain the property of BYRNE & ENRIGHT ARCHITECTURE LTD. No duplication is permitted without prior written consent. Drawings to be read in conjunction with specification. Tradesmen are required to contact local T.A 24hrs prior to site inspections to inform of liscence number.

job no: 16/1824

sheet no: 1.1 of 33

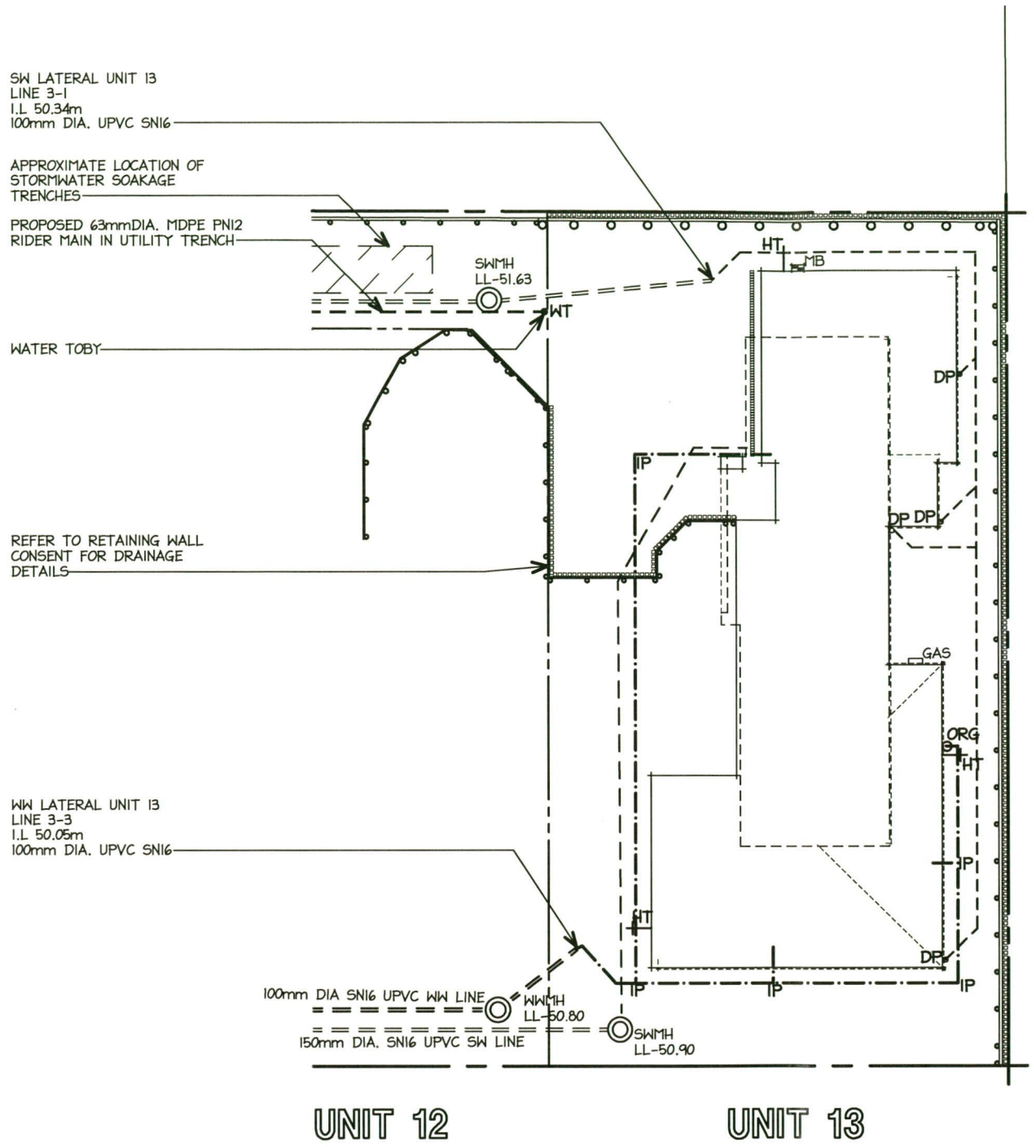

SITE DRAINAGE PLAN

THIS PLAN IS TO BE READ IN CONJUNCTION WITH ENGINEERING PLANS PREPARED BY CKL ENGINEERING CONSULTANTS LTD.

HAMILTON CITY COUNCIL
BUILDING UNIT
APPROVED
SUBJECT TO CONDITIONS TO BE KEPT ON SITE

LEGEND:

NEW 100mm DIA. uPVC SANITARY SEWER DRAIN (MIN. 1:60 FALL).

NEW 100mm DIA. uPVC STORMWATER DRAIN (MIN. 1:100 FALL).

20mm WATER CONNECTION

EXISTING 100mm DIA. NOVAFLOW PIPE IN FILTER FABRIC

STRIP DRAIN TO JOIN TO STORM WATER SYSTEM VIA. A SILT TRAP (CONFIRM LOCATION AND FALLS ON SITE)

SELECTED OVERFLOW RELIEF GULLY, INSTALL IN ACCORDANCE WITH AS/NZS 3500.2.2 O.R.G 75mm MIN. ABOVE F.G.L — ORG

PROVIDE INSPECTION POINTS AS PER AS/NZS 3500.2.2 — IP

INDICATES 74mm DIA. uPVC DOWNPIPE (85m2 PER DP) — DP

HOSE TAPS (2 PER UNIT) — HT

WATER TOBY — WT

DRAINS INSTALLED UNDER BUILDINGS SHALL BE:
A) STRAIGHT AND OF EVEN GRADIENT.
B) SEPARATED FROM THE BUILDING FOUNDATION BY AT LEAST 25mm, AND
C) WHEN PASSING THROUGH CONCRETE, SLEEVED OR WRAPPED IN A DURABLE AND FLEXIBLE MATERIAL TO ALLOW FOR EXPANSION AND CONTRACTION.

DRAINS PASSING BENEATH BUILDINGS WITH A CONCRETE SLAB ON THE GROUND SHALL HAVE IN ADDITION TO ABOVE:
A) 50mm CLEARANCE FROM THE TOP OF THE PIPE TO THE UNDERSIDE OF THE SLAB, AND
B) JUNCTIONS BENEATH THE BUILDING JOINING AT AN ANGLE OF NOT MORE THAN 45.
C) CLEANING ACCESS EITHER SIDE OF SLAB.

THIS DRAINAGE PLAN IS TO BE READ IN CONJUNCTION WITH THE ENGINEERING DEVELOPMENT PLAN PREPARED CKL CONSULTING ENGINEERS. WHERE THE ENGINEERING PLANS DIFFER FROM THIS PLAN, THE ENGINEERING PLANS ARE TO TAKE PRECEDENCE. ADVISE BYRNE + ENRIGHT ARCHITECTURE LTD. OF ANY DIFFERENCES BETWEEN THE PLANS PRIOR TO COMMENCING ANY WORK.

REFER TO SHEET 2.5 FOR UNIT PLUMBING LAYOUTS

STORMWATER & WASTEWATER CONNECTION LATERALS AS PER ENGINEERING PLANS, CONFIRM LOCATION & INVERT LEVELS ON SITE PRIOR TO COMMENCING CONSTRUCTION

DRAINAGE PLAN IS SCHEMATIC ONLY IN LAYOUT, VERIFY ALL DIMENSIONS AND LEVELS ON SITE.

DRAINAGE NOTES:

SUPPLY A 1:100 SCALE AS-BUILT DRAWING OF DRAINS AND FITTINGS TO THE TERRITORIAL AUTHORITY AND TO THE OWNER ON COMPLETION.

ALL PLUMBING AND DRAINAGE TO COMPLY WITH AS/NZS 3500.2.2, AND LOCAL T.A REQUIREMENTS.

UPVC PIPES, BENDS, JUNCTIONS, FITTINGS AND JOINTS TO AS/NZS 1254 AND AS/NZS 1260.

ALL PIPES IN CONCRETE TO HAVE DENSO TAPE (SYNTHETIC FABRIC BASED TAPE IMPREGNATED AND COATED WITH ORGANIC PETROLEUM BASED COMPOUNDS) APPLIED.

PIPES SHALL INCORPORATE EXPANSION JOINTS IN ACCORDANCE WITH CHAPTER 8 OF NZS 7643.

JUNCTIONS BETWEEN DISCHARGE PIPES MUST BE AT 45 DEG. OR SWEPT.

REFER TO AS/NZS 3500.2.2 FOR ALL PIPE SIZING.

CHECK AND CONFIRM LOCATION & INVERT LEVELS OF ALL EXISTING DRAINS PRIOR TO COMMENCING ANY WORK.

SETOUT TO ENSURE MIN. DEPTH AND FALL REQUIREMENTS. CONTRACTOR TO CO-ORDINATE ALL DRAINS LAID UNDER BUILDINGS WITH FOUNDATION CONSTRUCTION

BYRNE + ENRIGHT ARCHITECTURE LTD
PO BOX 28162, ROTOTUNA, HAMILTON.
PH (07) 839 5774, Email:admin@designers.net.nz
LICENSED ARCHITECTURAL DESIGNERS
www.designers.net.nz

LICENSED BUILDING PRACTITIONERS www.dbh.govt.nz BUILDING CONFIDENCE

Issue:	Date:	Description:
WDI	27/07/17	WORKING DRAWINGS FOR BUILDING CONSENT
DD	12/06/17	DEVELOPED DESIGN
DRAFT RC	25/11/16	DRAFT RESOURCE CONSENT APPLICATION

job: PROPOSED HOUSE, UNIT 13 AT 36 BORMAN ROAD, HUNTINGTON, HAMILTON.

sheet: SITE DRAINAGE PLAN

date: 08/08/17

COPYRIGHT

scale: 1:200

design: P.E

drawn: P.B

Contractor to check and verify all levels and dimensions on site prior to commencing work. Do not scale off drawings. All drawings and documentation remain the property of BYRNE & ENRIGHT ARCHITECTURE LTD. No duplication is permitted without prior written consent. Drawings to be read in conjunction with specification. Tradesmen are required to contact local T.A 24hrs prior to site inspections to inform of liscence number.

job no: 16/1824

sheet no: 1.2 of 33

WALL LEGEND:

- 90 x 45 TIMBER FRAME WITH STUDS AT 400 CTRS. & 2 ROWS OF NOGS
- 90 x 45 TIMBER FRAME WITH STUDS AT 600 CTRS. & 2 ROWS OF NOGS

WALL FRAMING FOR CEDAR WEATHERBOARDS TO HAVE NOGS AT 480mm CTRS. AS REQUIRED FOR CAVITY BATTENS

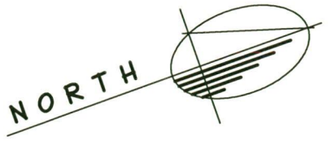

ELEVATIONS

BRICK VENEER LINTELS		
LINTEL	SIZE	TYPE
BV1	80 x 80 x 6	GALV STEEL ANGLE
BV2	125 x 75 x 10	GALV STEEL ANGLE

NOTE:

1. WHERE OPENINGS ARE LESS THAN 2000mm WIDE, THE LINTEL BAR IS REQUIRED TO HAVE A SEATING OF 100mm EACH SIDE. IF THE OPENING EXCEEDS 2000mm, SEATING REQUIREMENT IS 200mm EACH SIDE.
2. PROP ALL LINTELS FOR MIN. 7 DAYS.

LINTELS SIZED AS PER (TABLE 5.0 - LINTEL BARS SUPPORTING VENEER) IN BRANZ APPRAISED THINK BRICK NZ 2 STORY CLAY BRICK VENEER CONSTRUCTION - MADE EASY

LOWER WALLS OF 2 STOREY SG8 STUDS TO LOAD BEARING WALLS
-Light roof
-Medium Wind Zone
Note: Nogs at 800 crs.

LOADED DIMENSION OF WALL	STUD HEIGHT FOR MAX. HEIGHT OF:		
	2.4m at 600 CRS.	2.7m at 400 CRS.	3.0m at 400 CRS.
2.0	90 x 45	90 x 45	90 x 45
4.0	90 x 45	90 x 45	90 x 45
6.0	90 x 45	90 x 45	90 x 45

SINGLE OR TOP STOREY SG8 STUDS TO LOAD BEARING WALLS
-Light roof
-Medium Wind Zone
Note: Nogs @ 800 crs.

LOADED DIMENSION OF WALL	STUD HEIGHT FOR MAX. HEIGHT OF:		
	2.4m @ 600 CRS.	2.7m @ 600 CRS.	3.0m @ 400 CRS.
2.0	90 x 45	90 x 45	90 x 45
4.0	90 x 45	90 x 45	90 x 45
6.0	90 x 45	90 x 45	90 x 45

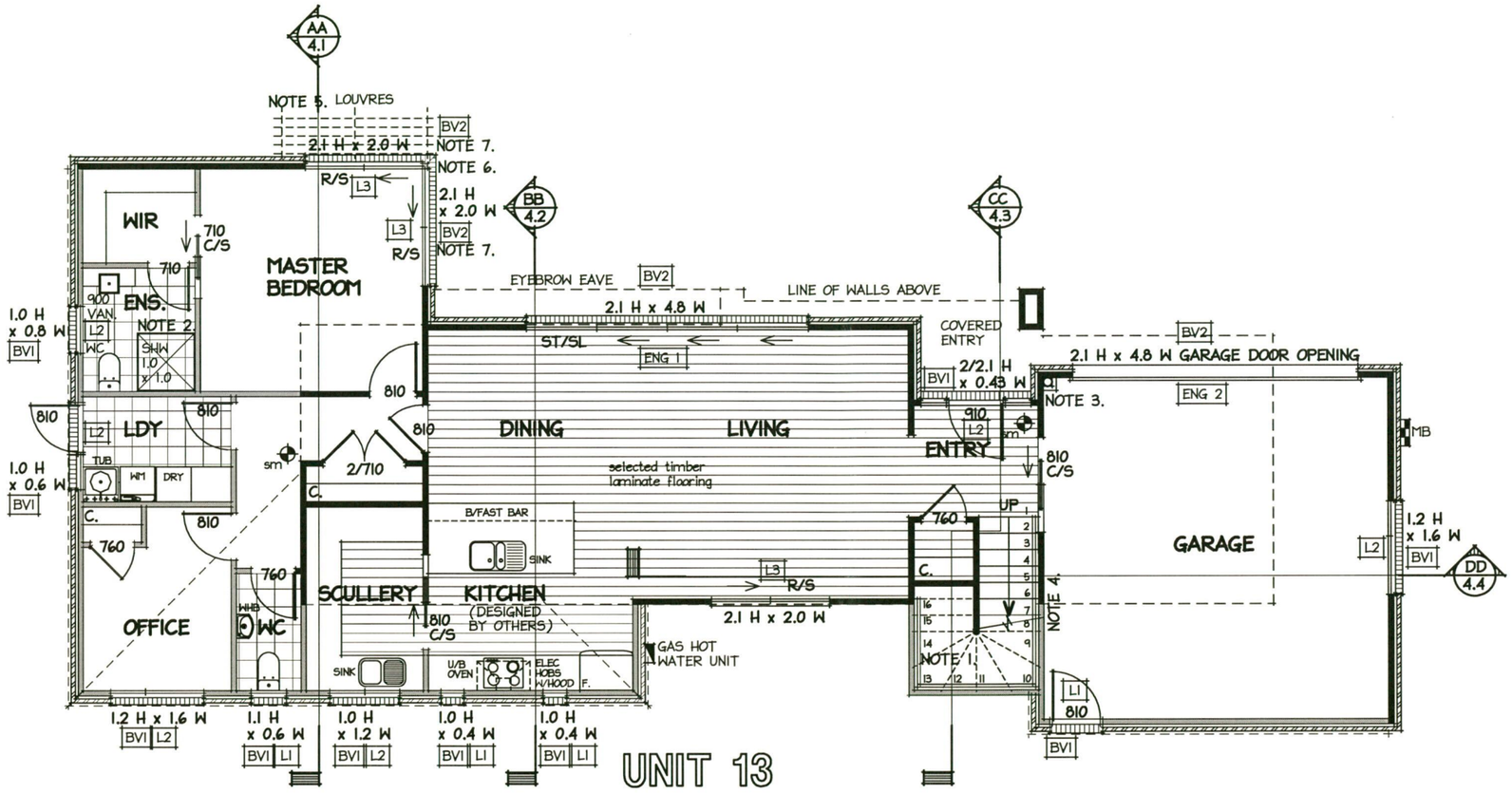

UNIT 13

GROUND FLOOR AREA = 146.63m2
UPPER FLOOR AREA = 84.27m2
TOTAL FLOOR AREA = 230.90m2

2.605m STUD HEIGHT THROUGHOUT GROUND FLOOR

LINTEL SCHEDULE		
LINTEL	TIMBER SIZE	TIMBER TYPE
L1	2/90 x 45	SG8
L2	2/140 x 45	SG8
L3	2/190 x 45	SG8
L4	2/240 x 90	SG8
ENG 1	380 PFC	ENG
ENG 2	300 PFC	ENG

GROUND FLOOR PLAN

HAMILTON CITY COUNCIL
BUILDING UNIT APPROVED
SUBJECT TO CONDITIONS TO BE KEPT ON SITE

GENERAL NOTES:

ALL WORK TO COMPLY WITH NZS3604:2011 & NZ BUILDING CODE.

JOINER TO CHECK ALL WINDOW OPENING SIZES ON SITE PRIOR TO FABRICATION.

TRUSS DESIGNER TO INFORM BYRNE & ENRIGHT ARCHITECTURE LTD. IF ANY GIRDER TRUSS OR POINT LOAD IS SUPPORTED OVER A WINDOW OR DOOR OPENING

ALL WINDOW AND DOOR DIMENSIONS SHOWN ARE ROUGH OPENING, SITE VERIFY PRIOR TO FABRICATION.

SAFETY GLASS TO BE USED FOR ALL BATHROOMS TO COMPLY WITH NZS 4223 (DENOTED ON ELEVATIONS BY "SG").

ALL GLAZING TO COMPLY WITH NZS 4223.

ENSURE MIN. DOUBLE STUDS BETWEEN ALL DOOR & WINDOW TO WALL CORNER JUNCTIONS. (WHERE POSSIBLE)

ALL INTERIOR DOORS TO BE PAINT FINISHED MDF HOLLOW CORE DOORS WITH SELECTED HARDWARE BY CLIENT. (1980mm HEIGHT FOR UPPER FLOOR DOORS & 2100mm HT FOR GROUND FLOOR DOORS).

GIB AQUALINE TO ALL WET AREAS WITH 2 COATS OF ENAMEL PAINT FINISH TO UNTILED WALLS

HOT WATER PIPES TO BE SIZED ACCORDING TO NZBC G12 & NZS 4305:1996. MAINS PRESSURE. \15mm DIA. ALLOW 12m MAX. PIPE LENGTH, PIPE LENGTH BEYOND THIS MUST BE LAGGED.

WET AREA FINISHES:

TILE FLOORING:
SELECTED TILES OVER WATER PROOF MEMBRANE: (WHERE REQUIRED): ALL TILES AT ENTRY WAYS TO BE CERAMIC FINISH TO COMPLY WITH NZBC D1/AS1 CLAUSE 2.1.3(TABLE 2 : WET SLIP RESISTANCE)

- WALL AND CEILING FINISHES ARE ACRYLIC SEMI-GLOSS PAINT OVER GIB AQUALINE LININGS.
- BENCH TOPS ARE FORMICA.
- ALL TO COMPLY WITH NZBC E3/AS1 CLAUSE 3.

TIMBER FRAMING NOTES:

CONFIRM ALL LINTEL SIZES WITH PRE-CUT MANUFACTURERS PLAN.

ALL TIMBER TO BE H1.2 TREATED EXCEPT WHERE NOTED OTHERWISE OR AS REQUIRED BY NZBC:B2/AS1

ALL TIMBER TO BE SG8 UNLESS NOTED OTHERWISE

SPECIFIC NOTES:

NOTE 1.
40mm MIN. DIA. HANDRAIL TO ONE SIDE OF STAIRWAY TO COMPLY WITH NZBC D1/AS1, 900mm HIGH FROM STAIRWAY NOSING. MDF TREADS AND RISERS TO MANUFACTURER'S DESIGN & DETAILS WITH 16 RISERS AT 179mm AND 280mm TREADS, WITH A 25mm NOSING PROJECTION. (305mm OVERALL TREAD) (OVERALL FLOOR TO FLOOR HEIGHT = 2865mm C.O.S) STAIRS DESIGNED AS A 'COMMON & MAIN PRIVATE' STAIRWAY AS PER TABLE 6 NZBC D1.

NOTE 2.
1.0m x 1.0m PROPRIETARY SHOWER BASE 'ATLANTIS EASY-TILE' OR SIMILAR APPROVED WITH TOUGHENED SAFETY GLASS DOOR AND RETURNS, TILED SHOWER WALLS TO CEILING TO BE LINED WITH 10mm GIB AQUALINE, COATED WITH 'WET SEAL' FLEXIBLE WATERPROOFING MEMBRANE SYSTEM, WITH SELECTED CERAMIC TILES OVER. ALL INSTALLED STRICTLY TO MANUFACTURERS INSTRUCTIONS.

NOTE 3.
100mm DIA. DRAINAGE STACK WITH 70 x 35 FRAME SURROUND & 10mm STANDARD GIB PLASTERBOARD.

NOTE 4.
R2.2 INSULATION TO INTERNAL GARAGE WALLS

NOTE 5.
LOUVRETEC (OR SIMILAR APPROVED) LOUVRE SYSTEM INSTALLED STRICTLY TO MANUFACTURERS SPECIFICATIONS

NOTE 6.
LVL POST TO CORNER WITH ALUMINIUM FACING

NOTE 7.
BRICK VENEER LINTELS ON CORNER TO HAVE WELDED CORNER JOINT AND FIXED TO TIMBER FRAME WITH 75 x 10 COACH SCREWS @ 400mm CRS.

SMOKE ALARMS:

- SMOKE DETECTORS TO BE INSTALLED THROUGHOUT DWELLING IN COMPLIANCE WITH F7/AS1 OF THE NZBC.
- THERE MUST BE A SMOKE DETECTOR WITHIN 3.0m OF EACH BEDROOM DOOR AND TO ALL ESCAPE PATHS. SMOKE DETECTORS TO BE MOUNTED ON CEILING NOT MORE THAN 300mm BELOW HIGHEST PART OF ROOM.

sm DENOTES SMOKE DETECTOR WITH HUSH BUTTON

BYRNE + ENRIGHT ARCHITECTURE LTD
PO BOX 28162, ROTOTUNA, HAMILTON.
PH (07) 839 5774, Email:admin@designers.net.nz
LICENSED ARCHITECTURAL DESIGNERS
www.designers.net.nz

LICENSED BUILDING PRACTITIONERS BUILDING CONFIDENCE www.dbh.govt.nz

Issue:	Date:	Description:
WDI	27/07/17	WORKING DRAWINGS FOR BUILDING CONSENT
DD	12/06/17	DEVELOPED DESIGN
DRAFT RC	25/11/16	DRAFT RESOURCE CONSENT APPLICATION

job: PROPOSED HOUSE, UNIT 13 AT 36 BORMAN ROAD, HUNTINGTON, HAMILTON.

sheet: GROUND FLOOR PLAN

date: 08/08/17

COPYRIGHT
Contractor to check and verify all levels and dimensions on site prior to commencing work. Do not scale off drawings. All drawings and documentation remain the property of BYRNE & ENRIGHT ARCHITECTURE LTD. No duplication is permitted without prior written consent. Drawings to be read in conjunction with specification. Tradesmen are required to contact local T.A 24hrs prior to site inspections to inform of liscence number.

scale: 1:100
design: P.E
drawn: P.B

job no: 16/1824
sheet no: 2.1 of 33

SPECIFIC NOTES:

NOTE 1.
CONFIRM KITCHEN DIMENSIONS WITH KITCHEN DESIGNER PRIOR TO CONSTRUCTION

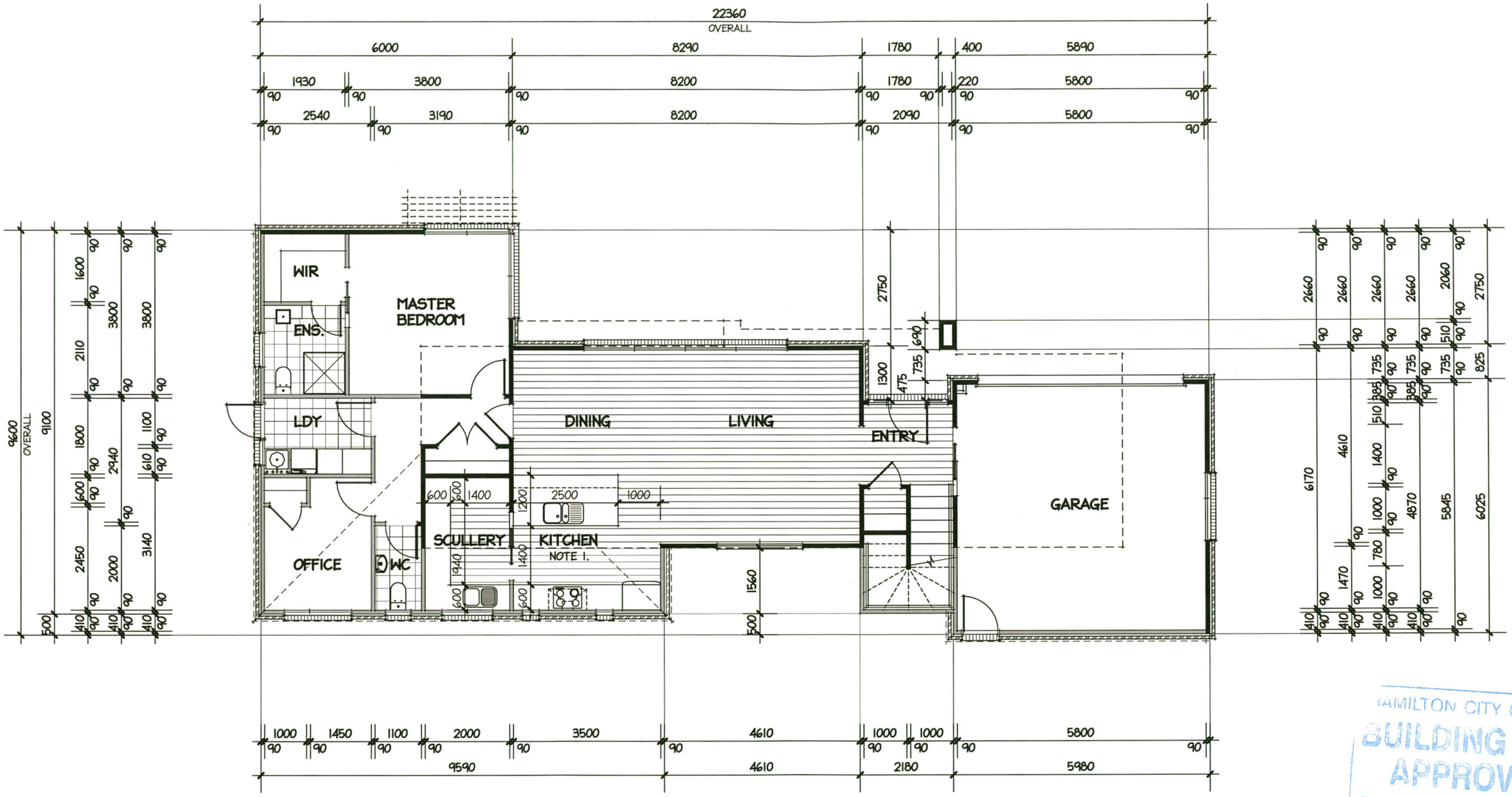

HAMILTON CITY COUNCIL
BUILDING UNIT
APPROVED
SUBJECT TO CONDITIONS
TO BE KEPT ON SITE

DIMENSIONED GROUND FLOOR PLAN

BYRNE+ENRIGHT ARCHITECTURE LTD
PO BOX 28162, ROTOTUNA, HAMILTON.
PH (07) 839 5774, Email:admin@designers.net.nz
LICENSED ARCHITECTURAL DESIGNERS
www.designers.net.nz

LICENSED BUILDING PRACTITIONERS BUILDING CONFIDENCE www.dbh.govt.nz

Issue:	Date:	Description:
WDI	27/07/17	WORKING DRAWINGS FOR BUILDING CONSENT
DD	12/06/17	DEVELOPED DESIGN
DRAFT RC	25/11/16	DRAFT RESOURCE CONSENT APPLICATION

job: PROPOSED HOUSE, UNIT 13 AT 36 BORMAN ROAD, HUNTINGTON, HAMILTON.

sheet: DIMENSIONED GROUND FLOOR PLAN

date: 08/08/17

COPYRIGHT

scale: 1:100

design: P.E

drawn: P.B

Contractor to check and verify all levels and dimensions on site prior to commencing work. Do not scale off drawings.
All drawings and documentation remain the property of BYRNE & ENRIGHT ARCHITECTURE LTD. No duplication is permitted without prior written consent.
Drawings to be read in conjunction with specification.
Tradesmen are required to contact local T.A 24hrs prior to site inspections to inform of liscence number.

job no: 16/1824

sheet no: 2.2 of 33

WALL LEGEND:

90 x 45 TIMBER FRAME WITH STUDS AT 600 CTRS. & 2 ROWS OF NOGS

WALL FRAMING FOR CEDAR WEATHERBOARDS TO HAVE NOGS AT 480mm CTRS. AS REQUIRED FOR CAVITY BATTENS

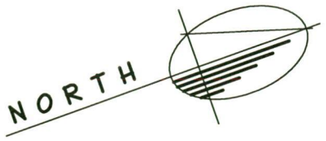

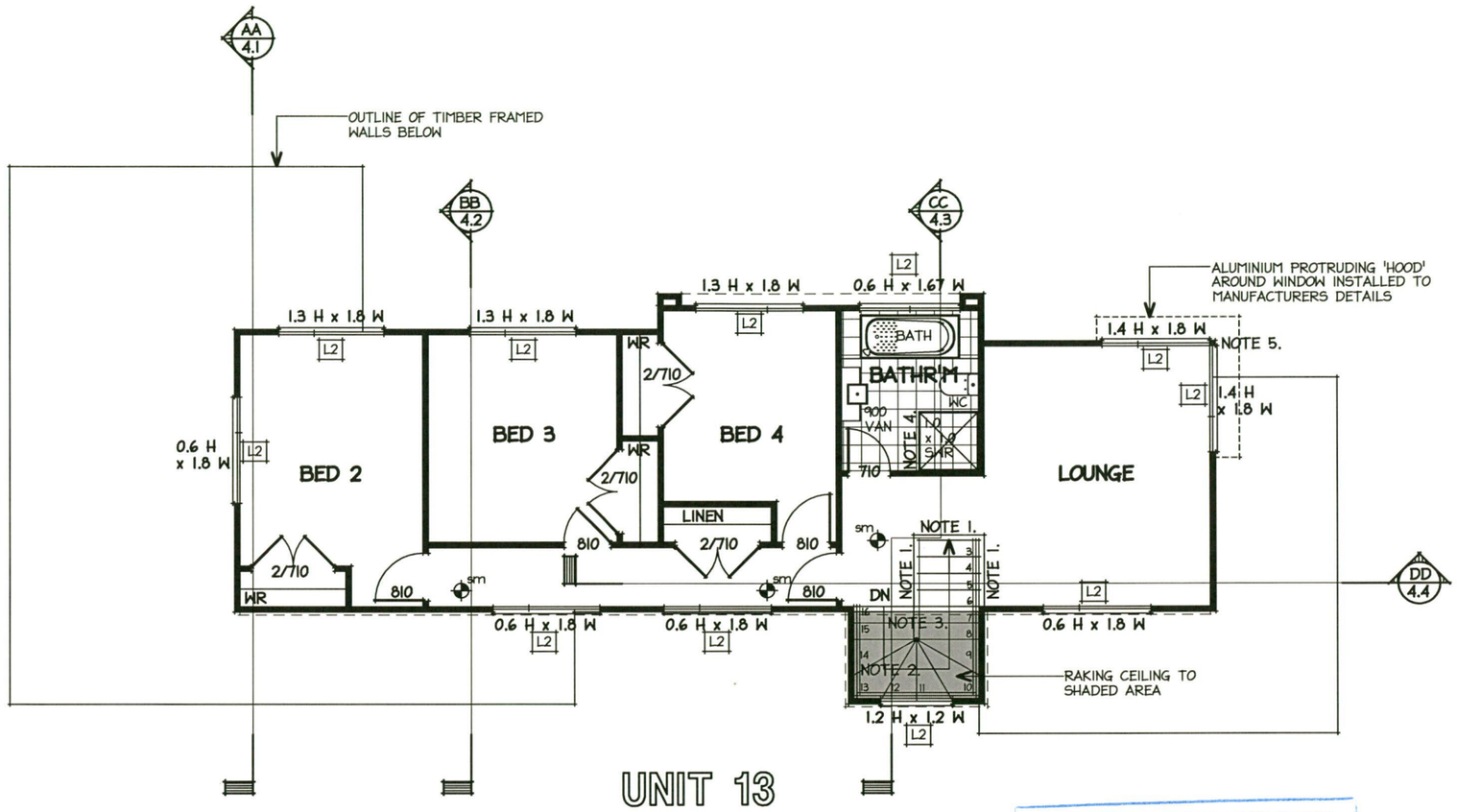

UNIT 13

UPPER FLOOR AREA = 84.27m2

2.455m STUD HEIGHT THROUGHOUT UPPER FLOOR

UPPER FLOOR PLAN

HAMILTON CITY COUNCIL
BUILDING UNIT APPROVED
SUBJECT TO CONDITIONS TO BE KEPT ON SITE

GENERAL NOTES:

ALL WORK TO COMPLY WITH NZS3604:2011 & NZ BUILDING CODE.

JOINER TO CHECK ALL WINDOW OPENING SIZES ON SITE PRIOR TO FABRICATION.

ALL WINDOW AND DOOR DIMENSIONS SHOWN ARE ROUGH OPENING, SITE VERIFY PRIOR TO FABRICATION.

SAFETY GLASS TO BE USED FOR ALL BATHROOMS TO COMPLY WITH NZS 4223 (DENOTED ON ELEVATIONS BY 'SG').

ALL GLAZING TO COMPLY WITH NZS 4223.

ENSURE MIN. DOUBLE STUDS BETWEEN ALL DOOR & WINDOW TO WALL CORNER JUNCTIONS. (WHERE POSSIBLE)

ALL INTERIOR DOORS TO BE PAINT FINISHED MDF HOLLOW CORE DOORS WITH SELECTED HARDWARE BY CLIENT. (1980mm HEIGHT FOR UPPER FLOOR DOORS & 2100mm HT FOR GROUND FLOOR DOORS).

GIB AQUALINE TO ALL WET AREAS WITH 2 COATS OF ENAMEL PAINT FINISH TO UNTILED WALLS

HOT WATER PIPES TO BE SIZED ACCORDING TO NZBC G12 & NZS 4305:1996. MAINS PRESSURE. \15mm DIA. ALLOW 12m MAX. PIPE LENGTH, PIPE LENGTH BEYOND THIS MUST BE LAGGED.

WET AREA FINISHES:

TILE FLOORING:
SELECTED TILES OVER WATERPOOFING MEMBRANE OVER 6mm JAMES HARDIE SLATE & TILE UNDERLAY. (WHERE REQUIRED) : ALL TILES AT ENTRY WAYS TO BE CERAMIC FINISH TO COMPLY WITH NZBC D1/AS1 CLAUSE 2.1.3 (TABLE 2 : WET SLIP RESISTANCE)

- WALL AND CEILING FINISHES ARE ACRYLIC SEMI-GLOSS PAINT OVER GIB AQUALINE LININGS.
- BENCH TOPS ARE FORMICA.
- ALL TO COMPLY WITH NZBC E3/AS1 CLAUSE 3.

TIMBER FRAMING NOTES:

CONFIRM ALL LINTEL SIZES WITH PRE-CUT MANUFACTURERS PLAN.

ALL TIMBER TO BE H1.2 TREATED EXCEPT WHERE NOTED OTHERWISE OR AS REQUIRED BY NZBC:B2/AS1

ALL TIMBER TO BE SG8 UNLESS NOTED OTHERWISE

SPECIFIC NOTES:

NOTE 1.
1.0m MIN. HT BARRIER WALL LINED IN STANDARD GIB.

NOTE 2.
40mm MIN. DIA. HANDRAIL TO ONE SIDE OF STAIRWAY TO COMPLY WITH NZBC D1/AS1, 900mm HIGH FROM STAIRWAY NOSING. MDF TREADS AND RISERS TO MANUFACTURER'S DESIGN & DETAILS WITH 16 RISERS AT 179mm AND 280mm TREADS, WITH A 25mm NOSING PROJECTION. (305mm OVERALL TREAD) (OVERALL FLOOR TO FLOOR HEIGHT = 2865mm C.O.S.) STAIRS DESIGNED AS A 'COMMON & MAIN PRIVATE' STAIRWAY AS PER TABLE 6 NZBC D1.

NOTE 3.
BEAM ABOVE REFER TO ROOF PLAN

NOTE 4.
1.0m x 1.0m PROPRIETARY SHOWER BASE 'ATLANTIS EASY-TILE' OR SIMILAR APPROVED WITH TOUGHENED SAFETY GLASS DOOR AND RETURNS, TILED SHOWER WALLS TO CEILING TO BE LINED WITH 10mm GIB AQUALINE, COATED WITH 'WET SEAL' FLEXIBLE WATERPROOFING MEMBRANE SYSTEM, WITH SELECTED CERAMIC TILES OVER. ALL INSTALLED STRICTLY TO MANUFACTURERS INSTRUCTIONS.

NOTE 5.
LVL POST TO CORNER WITH ALUMINIUM FACING

SMOKE ALARMS:

- SMOKE DETECTORS TO BE INSTALLED THROUGHOUT DWELLING IN COMPLIANCE WITH F7/AS1 OF THE NZBC.
- THERE MUST BE A SMOKE DETECTOR WITHIN 3.0m OF EACH BEDROOM DOOR AND TO ALL ESCAPE PATHS. SMOKE DETECTORS TO BE MOUNTED ON CEILING NOT MORE THAN 300mm BELOW HIGHEST PART OF ROOM.

sm DENOTES SMOKE DETECTOR WITH HUSH BUTTON

ELEVATIONS

SINGLE OR TOP STOREY SG8 STUDS TO LOAD BEARING WALLS
-Light roof
-Medium Wind Zone
Note: Nogs @ 800 crs.

LOADED DIMENSION OF WALL	STUD HEIGHT FOR MAX. HEIGHT OF:		
	2.4m @ 600 CRS.	2.7m @ 600 CRS.	3.0m @ 400 CRS.
2.0	90 x 45	90 x 45	90 x 45
4.0	90 x 45	90 x 45	90 x 45
6.0	90 x 45	90 x 45	90 x 45

LINTEL SCHEDULE

LINTEL	TIMBER SIZE	TIMBER TYPE
L1	2/90 x 45	SG8
L2	2/140 x 45	SG8
L3	2/190 x 45	SG8

BYRNE + ENRIGHT ARCHITECTURE LTD

PO BOX 28162, ROTOTUNA, HAMILTON.
PH (07) 839 5774, Email:admin@designers.net.nz
LICENSED ARCHITECTURAL DESIGNERS
www.designers.net.nz

LICENSED BUILDING PRACTITIONERS www.dbh.govt.nz BUILDING CONFIDENCE

Issue:	Date:	Description:
WDI	27/07/17	WORKING DRAWINGS FOR BUILDING CONSENT
DD	12/06/17	DEVELOPED DESIGN
DRAFT RC	25/11/16	DRAFT RESOURCE CONSENT APPLICATION

job: PROPOSED HOUSE, UNIT 13 AT 36 BORMAN ROAD, HUNTINGTON, HAMILTON.

sheet: UPPER FLOOR PLAN

date: 08/08/17

scale: 1:100

design: P.E

drawn: P.B

COPYRIGHT

Contractor to check and verify all levels and dimensions on site prior to commencing work. Do not scale off drawings. All drawings and documentation remain the property of BYRNE & ENRIGHT ARCHITECTURE LTD. No duplication is permitted without prior written consent. Drawings to be read in conjunction with specification. Tradesmen are required to contact local T.A 24hrs prior to site inspections to inform of liscence number.

job no: 16/1824

sheet no: 2.3 of 33

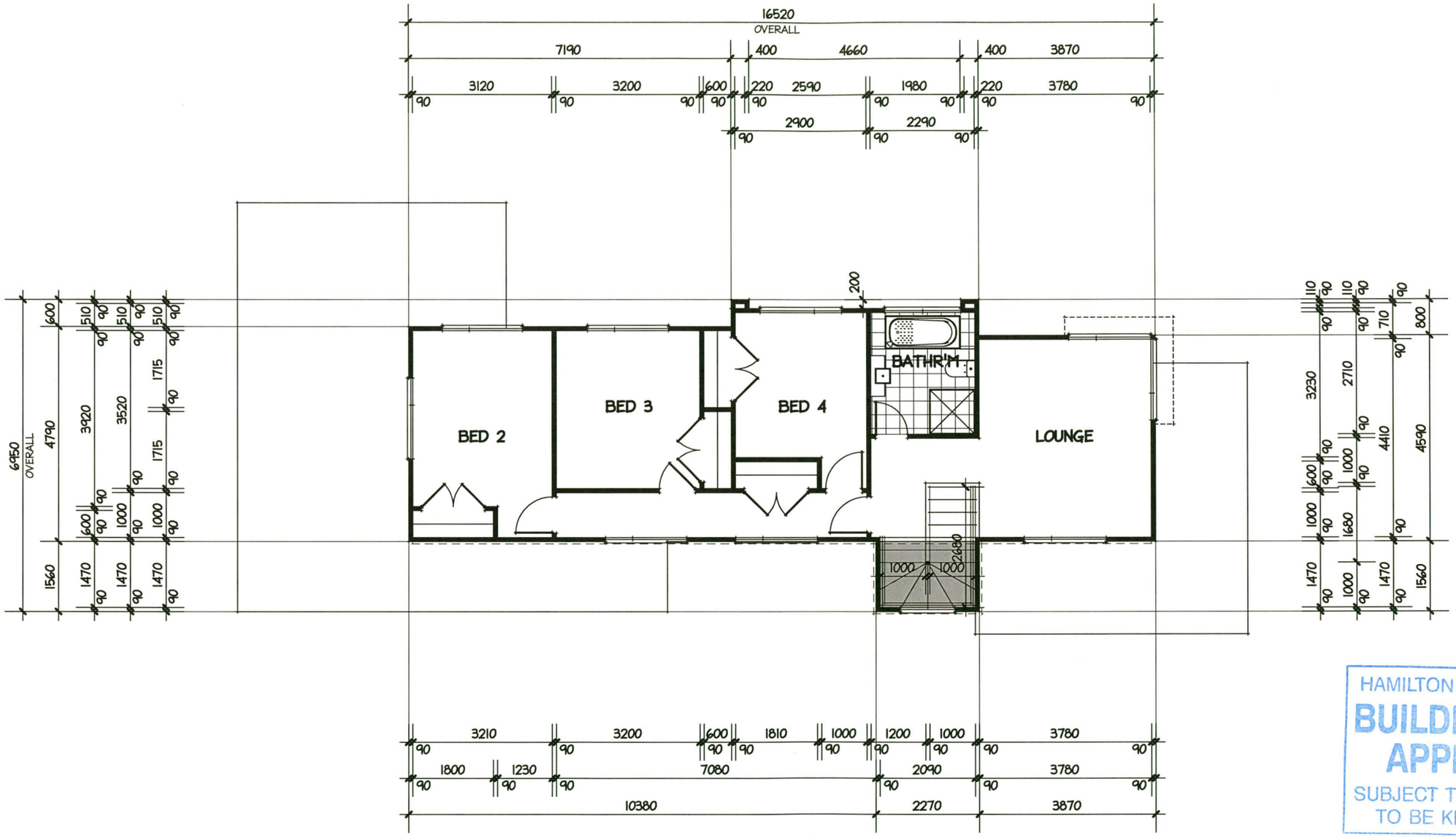

HAMILTON CITY COUNCIL
BUILDING UNIT
APPROVED
SUBJECT TO CONDITIONS
TO BE KEPT ON SITE

DIMENSIONED UPPER FLOOR PLAN

BYRNE + ENRIGHT ARCHITECTURE LTD
PO BOX 28162, ROTOTUNA, HAMILTON.
PH (07) 839 5774, Email:admin@designers.net.nz
LICENSED ARCHITECTURAL DESIGNERS
www.designers.net.nz

LICENSED BUILDING PRACTITIONERS www.dbh.govt.nz BUILDING CONFIDENCE

Issue:	Date:	Description:
WDI	27/07/17	WORKING DRAWINGS FOR BUILDING CONSENT
DD	12/06/17	DEVELOPED DESIGN
DRAFT RC	25/11/16	DRAFT RESOURCE CONSENT APPLICATION

job: PROPOSED HOUSE, UNIT 13 AT 36 BORMAN ROAD, HUNTINGTON, HAMILTON.

sheet: DIMENSIONED UPPER FLOOR PLAN

date: 08/08/17

COPYRIGHT

scale: 1:100

design: P.E

drawn: P.B

Contractor to check and verify all levels and dimensions on site prior to commencing work. Do not scale off drawings.
All drawings and documentation remain the property of BYRNE & ENRIGHT ARCHITECTURE LTD. No duplication is permitted without prior written consent.
Drawings to be read in conjunction with specification. Tradesmen are required to contact local T.A 24hrs prior to site inspections to inform of liscence number.

job no: 16/1824

sheet no: 2.4 of 33

THIS PLAN TO BE READ IN CONJUNCTION WITH ENGINEERS DRAWINGS PREPARED BY DBCON ENGINEERS JOB REF #162550.09

THIS PLAN TO BE READ IN CONJUNCTION WITH FIRTH RIBRAFT MANUFACTURERS TECHNICAL MANUAL & DETAILS

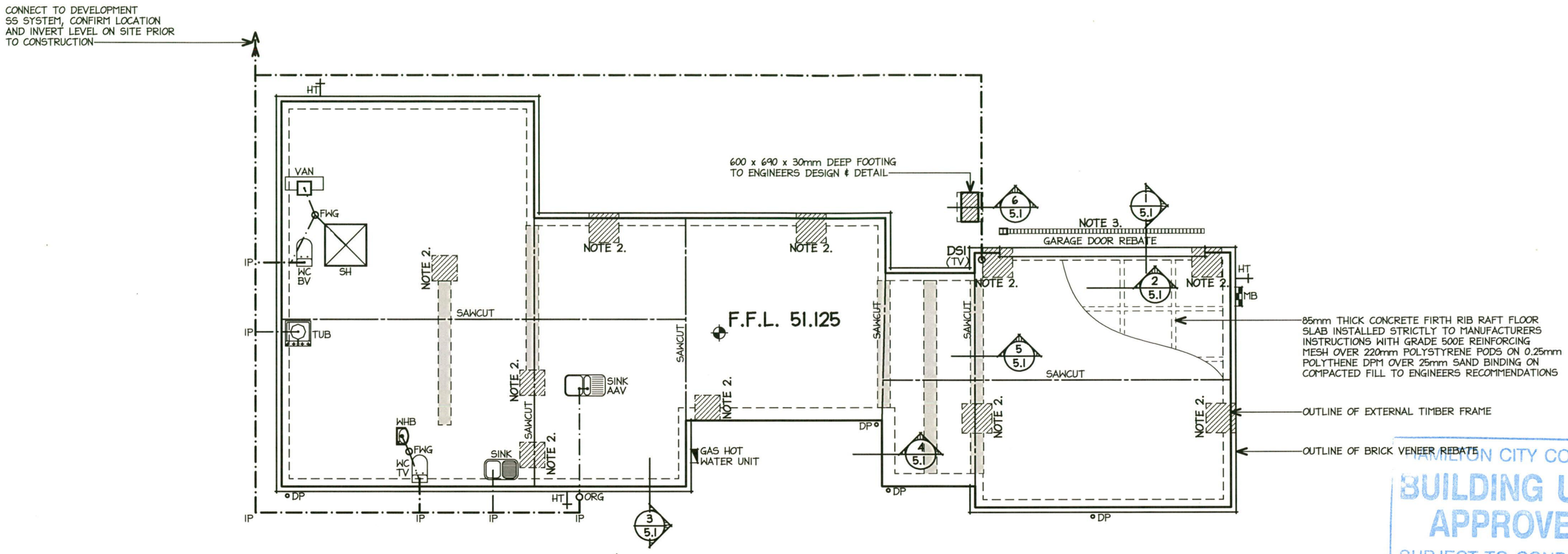

FOUNDATION & PLUMBING PLAN

HAMILTON CITY COUNCIL
BUILDING UNIT
APPROVED
SUBJECT TO CONDITIONS
TO BE KEPT ON SITE

SANITARY PLUMBING:

PLUMBING AND DRAINAGE PLANS ARE SCHEMATIC ONLY IN LAYOUT, VERIFY ALL PIPE RUNS AND LEVELS ON SITE.

ALL PLUMBING AND DRAINAGE TO COMPLY WITH AS/NZS 3500 PT. 2.2

MATERIALS; UPVC PIPE TO NZS 7641 AND AS/NZS 1260 COMPLETE WITH FITTINGS BRAND-MATCHED TO THE PIPE MANUFACTURERS REQUIREMENTS.

INSTALL ALL FIXTURES ACCORDING TO THE MANUFACTURERS INSTRUCTIONS.

CONNECT WASTE OUTLETS TO TRAPS AND RUN WASTE PIPES AND BACK VENTS CONCEALED.
SIZED AND FIXED TO AS/NZS 3500 PT 2.2

CONCEAL ALL PLUMBING IN WALLS OR FLOORS, PROVIDE ACCESS PANELS WHERE REQUIRED.

ENSURE THAT WASTE AND VENT RUNS AVOID STRUCTURAL MEMBERS AND WHERE OTHER TIMBERS SUCH AS TOP PLATES ARE CUT, STRENGTHEN THEM ACCORDINGLY WITH ADDITIONAL BLOCKING AND 40x40x1mm 600 LONG MS(GALV.) ANGLE FIXED TO TOP PLATE AND BLOCKING.

TEST SOIL AND WASTE DISPOSAL SYSTEMS TO ENSURE NO LEAKAGE EXISTS AND LEAVE IN PROPER WORKING ORDER.

JUNCTIONS BETWEEN DISCHARGE PIPES MUST BE AT 45° DEG. OR SWEPT.

PROVIDE INSPECTION POINTS AS PER NZBC E1/AS1 CLAUSE 3.7 ACCESS FOR MAINTENANCE.

ALL PIPES IN CONCRETE TO HAVE DENSO TAPE (SYNTHETIC FABRIC BASED TAPE IMPREGNATED & COATED WITH ORGANIC PETROLEUM BASED COMPOUNDS) APPLIED

PIPES SHALL INCORPORATE EXPANSION JOINTS IN ACCORDANCE WITH CHAPTER 8 OF NZS 7643.

HOTWATER PIPES TO BE SIZED ACCORDING TO NZBC G12 & NZS 4305:1996 MAINS PRESSURE.

VENT PIPES:
-DISCHARGE PIPES UP TO 40mm DIA. = 32mm VENT PIPE
-DISCHARGE PIPES OVER 40mm DIA. = 40mm VENT PIPE
-MAIN DRAIN VENT PIPE = 80mm DIA.

CONTRACTOR TO CO-ORDINATE ALL DRAINS LAID UNDER BUILDINGS WITH FOUNDATION CONSTRUCTION SETOUT TO ENSURE MIN. DEPTH AND FALL REQUIREMENTS

DRAINS UNDER BUILDINGS SHALL BE:

A) STRAIGHT AND OF EVEN GRADIENT.
B) SEPARATED FROM THE BUILDING FOUNDATION BY AT LEAST 25mm &
C) WHEN PASSING THROUGH CONCRETE, SLEEVED OR WRAPPED IN A DURABLE & FLEXIBLE MATERIAL TO ALLOW FOR EXPANSION & CONTRACTION.

DRAINS PASSING BENEATH BUILDINGS WITH A CONCRETE SLAB ON THE GROUND SHALL HAVE IN ADDITION TO ABOVE:

A) 50mm CLEARANCE FROM THE TOP OF THE PIPE TO THE UNDERSIDE OF THE SLAB, &
B) JUNCTIONS BENEATH THE BUILDING JOINING AT AN ANGLE OF NOT MORE THAN 45.
C) CLEANING ACCESS EITHER SIDE OF SLAB.

EXCAVATION NOTE

DBCON ENGINEERS HAS BEEN ENGAGED TO INSPECT THE COMPACTED SAND PAD AND ISSUE A PS4 ON COMPLETION.
DIGOUT AS PER ENGINEERS RECOMMENDATIONS REFER TO SOIL TESTING AND SITE ASSESSMENT PREPARED BY DBCON ENGINEERS.

LEGEND:

PLUMBING LEGEND: AS/NZS 3500 PT. 2.2

SANITARY FIXTURE	MIN. PIPE DIA.	MIN. GRADE
WASH HAND BASIN (WHB)	40mm	1:40
VANITY (VAN)	40mm	1:40
SINK	40mm	1:40
WASHING MACHINE (WM)	65mm	1:40
FLOOR WASTE GULLY WITH MAX. 3 FIXTURES	65mm	1:40
PLUMBING FIXTURES DIRECT TO DRAIN	65mm	1:40
SHOWER (SHW)	40mm	1:40
TOILET (WC)	80mm	1:60
TERMINAL VENT (TV)	50mm	
BACK VENT (BV)	50mm	
OVERFLOW RELIEF GULLY (ORG)		
FLOOR WASTE GULLY (FWG)		
INSPECTION POINT (IP)		

AAV APPROVED AIR ADMITTANCE VALVE (TYPE AQUALINE 32-40mm HAIGH AV3240)

ALL SINGLE FIXTURES DISCHARGING TO A DRAINAGE STACK OR FWG WITH A DEVELOPED LENGTH GREATER THAN 2.5m TO BE VENTED WITH AN AAV IN ACCORDANCE WITH AS/NZS 3500 PT. 2.2

NOTE:

SHRINKAGE CONTROL JOINTS INDICATED ON PLAN ARE INDICATIVE ONLY & MUST BE CONFIRMED BY AN EXPERIENCED CONCRETE CUTTING CONTRACTOR

PLUMBING & DRAINAGE PLANS ARE SCHEMATIC ONLY IN LAYOUT, VERIFY ALL PIPE RUNS AND LEVELS ON SITE

SPECIFIC NOTES:

NOTE 1.
300/500mm WIDE INTERNAL SLAB THINKENING, REFER TO DETAILS 5 & 6 ON SHEET 5.8

NOTE 2.
DENOTES 600/700mm SQ. SLAB THICKENING, REFER TO STRUCTURAL ENGINEERING PREPARED BY DBCON ENGINEERS. REFER TO JOB No. 162550.09

NOTE 3.
STRIP DRAIN TO JOIN STORM WATER VIA. A SILT TRAP

BYRNE+ENRIGHT ARCHITECTURE LTD
PO BOX 28162, ROTOTUNA, HAMILTON.
PH (07) 839 5774, Email:admin@designers.net.nz
LICENSED ARCHITECTURAL DESIGNERS
www.designers.net.nz

LICENSED BUILDING PRACTITIONERS www.dbh.govt.nz BUILDING CONFIDENCE

Issue:	Date:	Description:
WDI	27/07/17	WORKING DRAWINGS FOR BUILDING CONSENT
DD	12/06/17	DEVELOPED DESIGN
DRAFT RC	25/11/16	DRAFT RESOURCE CONSENT APPLICATION

job: PROPOSED HOUSE, UNIT 13 AT 36 BORMAN ROAD, HUNTINGTON, HAMILTON.

sheet: FOUNDATION & PLUMBING PLAN

date: 08/08/17 | scale: 1:100 | design: P.E | drawn: P.B

COPYRIGHT
Contractor to check and verify all levels and dimensions on site prior to commencing work. Do not scale off drawings. All drawings and documentation remain the property of BYRNE & ENRIGHT ARCHITECTURE LTD. No duplication is permitted without prior written consent. Drawings to be read in conjunction with specification. Tradesmen are required to contact local T.A 24hrs prior to site inspections to inform of licence number.

job no: 16/1824

sheet no: 2.5 of 33

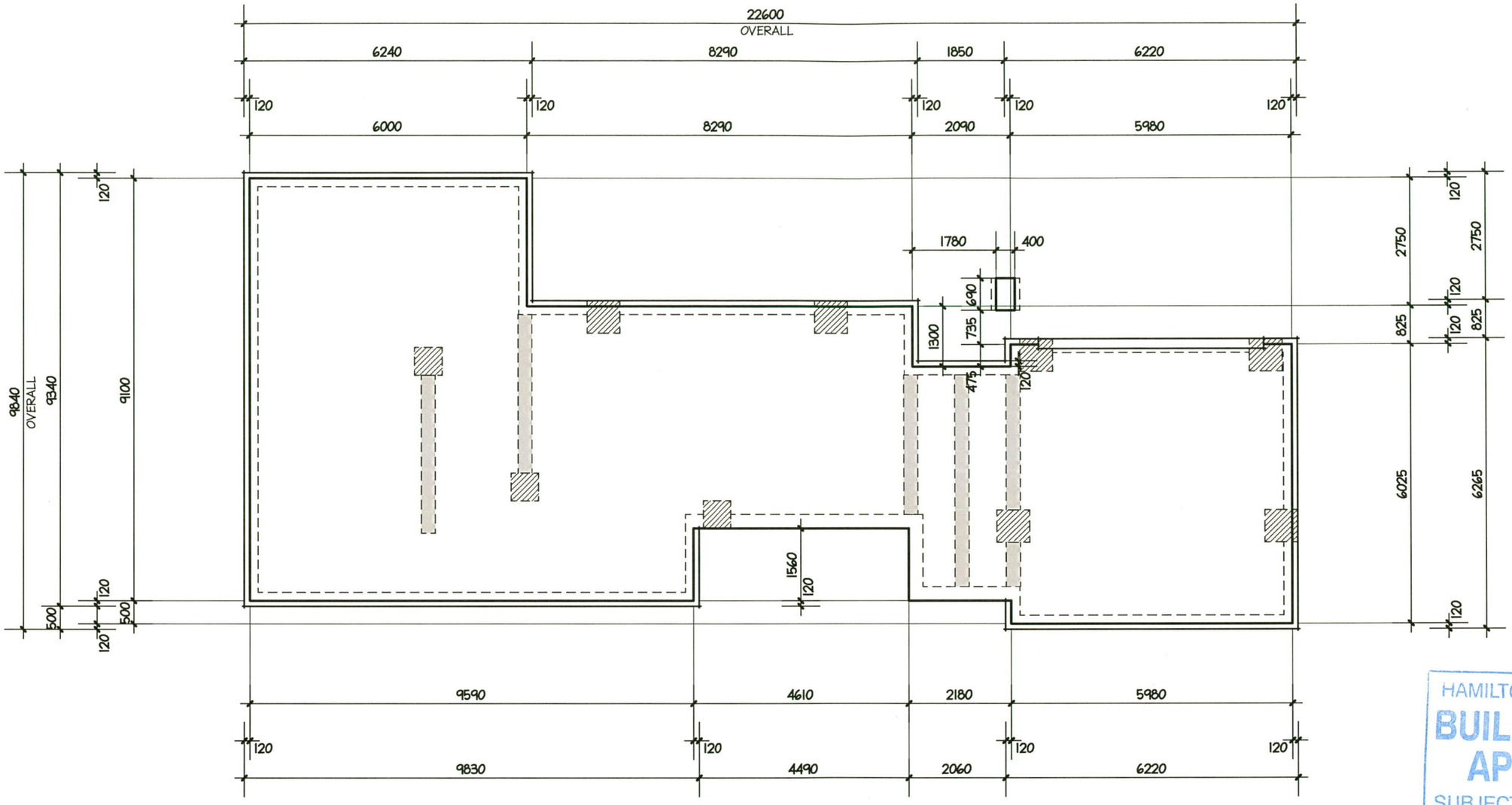

HAMILTON CITY COUNCIL
BUILDING UNIT
APPROVED
SUBJECT TO CONDITIONS
TO BE KEPT ON SITE

DIMENSIONED FOUNDATION PLAN

BYRNE + ENRIGHT ARCHITECTURE LTD
PO BOX 28162, ROTOTUNA, HAMILTON.
PH (07) 839 5774, Email:admin@designers.net.nz
LICENSED ARCHITECTURAL DESIGNERS
www.designers.net.nz

LICENSED BUILDING PRACTITIONERS www.dbh.govt.nz BUILDING CONFIDENCE

Issue:	Date:	Description:
WDI	27/07/17	WORKING DRAWINGS FOR BUILDING CONSENT
DD	12/06/17	DEVELOPED DESIGN
DRAFT RC	25/11/16	DRAFT RESOURCE CONSENT APPLICATION

job: PROPOSED HOUSE, UNIT 13 AT 36 BORMAN ROAD, HUNTINGTON, HAMILTON.

sheet: DIMENSIONED FOUNDATION PLAN

date: 08/08/17

scale: 1:100

design: P.E

drawn: P.B

COPYRIGHT
Contractor to check and verify all levels and dimensions on site prior to commencing work. Do not scale off drawings. All drawings and documentation remain the property of BYRNE & ENRIGHT ARCHITECTURE LTD. No duplication is permitted without prior written consent. Drawings to be read in conjunction with specification. Tradesmen are required to contact local T.A 24hrs prior to site inspections to inform of liscence number.

job no: 16/1824

sheet no: 2.6 of 33

BEAM TABLE
(AS PER ENGINEER)

#	SPAN	TYPE
B1 CANTILEVERED	3500 + 1140 CANTILEVER	300 x 90 hyONE
B2 LINTEL BELOW	1800	300 x 90 hy90
B3	4790	250 UB 37.3
B4 LINTEL BELOW	4980	380 PFC
B5	3680	240 x 90 hyONE
B6 LINTEL BELOW	4980	300 PFC
B7	5980	310 UB 46.2
B8	3785 + 625 CANTILEVER	240 x 90 hyONE
B9	4055	240 x 90 hy90

NOTE:
- LENGTH NOTED NEXT TO BEAM MEMBERS ARE DESIGN SPANS AND NOT TO BE USED AS BEAM LENGTH. CONFIRM LENGTH ON SITE PRIOR TO FABRICATION. NOTIFY THE STRUCTURAL ENGINEER IF ACTUAL LENGTH IS LONGER THAN THE DESIGN LENGTH.

MID FLOOR FRAMING LEGEND:

H1.2 240 x 45 SG8 FLOOR JOISTS AT 600mm CTRS. (A)

H1.2 240 x 45 SG8 FLOOR JOISTS AT 450mm CTRS. (B)

H3.1 T & G STRANDFLOOR FLOORING TO WET AREAS, SHOWN AS SHADED AREA.

DJ - DOUBLE JOIST

THIS PLAN TO BE READ IN CONJUNCTION WITH ENGINEERS DRAWINGS PREPARED BY DBCON ENGINEERS JOB REF #162550.09

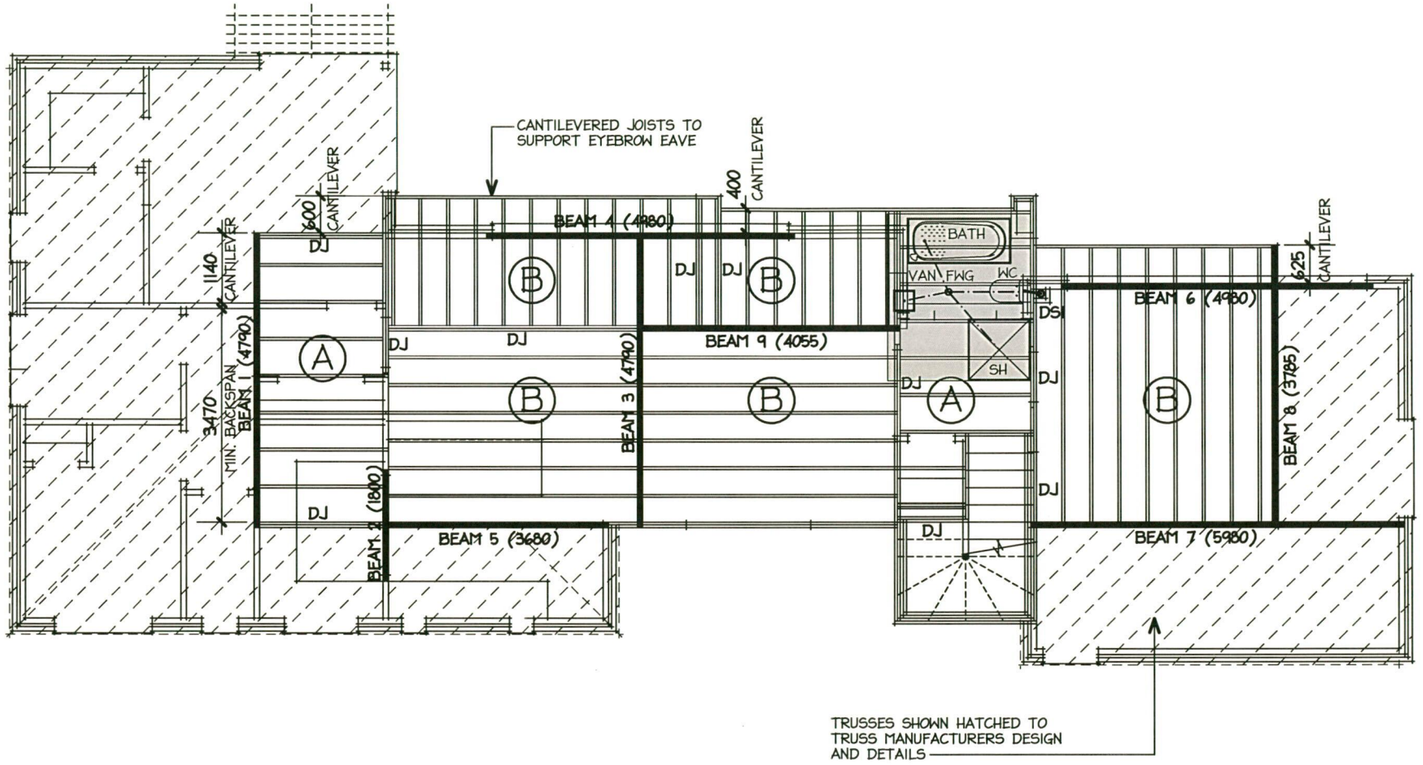

MID-FLOOR JOIST & PLUMBING PLAN

JOIST NOTES:

HOLES DRILLED IN FLOOR JOISTS OTHER THAN CANTILEVERED JOISTS SHALL BE:
(A) WITHIN THE MIDDLE THIRD OF THE DEPTH OF THE JOISTS, AND (B) NOT MORE THAN 3 TIMES THE DEPTH OF THE JOIST FROM THE FACE OF A SUPPORT (SEE FIG. 7.8(A) NZS 3604:2011).

HOLES AND NOTCHES SHALL BE:
(A) NOT MORE IN DIAMETER OR DEPTH THAN ONE-FIFTH THE DEPTH OF THE JOIST OR 32mm, WHICHEVER IS THE LESSER.
(B) AT MINIMUM SPACING MEASURED ALONG THE JOIST BETWEEN THE EDGES OF THE HOLES OR NOTCHES OF NOT LESS THAN THE DEPTH OF THE JOIST. (SEE FIG. 7.8(C) NZS 3604:2011)

WHERE COMPLIANCE WITH NZS 3604:2011 CANNOT BE ACHIEVED, USE 'THRU JOIST' OR LUMBERLOK FLOOR JOIST STIFFENER PROPRIETARY SYSTEM, INSTALLED TO MANUFACTURER'S INSTRUCTIONS.

- DOUBLE JOISTS ARE TO BE PLACED UNDER ALL LOAD BEARING WALLS THAT RUN PARALLEL TO JOISTS. (FOR NON-LOAD BEARING WALLS SOLID BLOCKING BETWEEN JOISTS AT 1200 CRS. MAX. MAY BE USED. REFER NZS 3604:2011 7.1.3.5)
- SOILD BLOCKING TO BE FIXED UNDER ALL WALLS RUNNING PERPENDICULAR TO JOISTS AND AT MID SPAN WHERE SPANS EXCEED 2.5m.
- LATERAL SUPPORT OF FLOOR JOISTS ALONG THE LINE OF EACH WALL THAT CONTAINS BRACING ELEMENTS BELOW.

- ENSURE THAT ALL STEEL BEAMS THAT END AT INTERTENANCY WALLS ARE FULLY SURROUNDED WITH SOLID BLOCKING AND GIB 'SOUNDSEAL' TO PROVIDE 'AIR TIGHT' SEAL.

SANITARY PLUMBING NOTES:

PLUMBING AND DRAINAGE PLANS ARE SCHEMATIC ONLY IN LAYOUT, VERIFY ALL PIPE RUNS AND LEVELS ON SITE.

ALL PLUMBING AND DRAINAGE TO COMPLY WITH AS/NZS 3500 PT. 2.2

MATERIALS; UPVC PIPE TO NZS 7641 AND AS/NZS 1260 COMPLETE WITH FITTINGS BRAND-MATCHED TO THE PIPE MANUFACTURERS REQUIREMENTS.

INSTALL ALL FIXTURES ACCORDING TO THE MANUFACTURERS INSTRUCTIONS.

CONNECT WASTE OUTLETS TO TRAPS AND RUN WASTE PIPES AND BACK VENTS CONCEALED.
SIZED AND FIXED TO AS/NZS 3500 PT 2.2

CONCEAL ALL PLUMBING IN WALLS OR FLOORS, PROVIDE ACCESS PANELS WHERE REQUIRED.

ENSURE THAT WASTE AND VENT RUNS AVOID STRUCTURAL MEMBERS AND WHERE OTHER TIMBERS SUCH AS TOP PLATES ARE CUT, STRENGTHEN THEM ACCORDINGLY WITH ADDITIONAL BLOCKING AND 40x40x1mm 600 LONG MS(GALV.) ANGLE FIXED TO TOP PLATE AND BLOCKING.

TEST SOIL AND WASTE DISPOSAL SYSTEMS TO ENSURE NO LEAKAGE EXISTS AND LEAVE IN PROPER WORKING ORDER.

PLUMBING LEGEND:

PLUMBING LEGEND: AS/NZS 3500 PT. 2.2

SANITARY FIXTURE	MIN. PIPE DIA.	MIN. GRADE
VANITY (VAN)	40mm	1:40
FLOOR WASTE GULLY WITH MAX. 3 FIXTURES	65mm	1:40
SHOWER (SHW)	40mm	1:40
BATH (BATH)	40mm	1:40
TOILET (WC)	80mm	1:60
TERMINAL VENT	50mm	
BACK VENT	50mm	
FLOOR WASTE GULLY (FWG)		

AAV APPROVED AIR ADMITTANCE VALVE (TYPE AQUALINE 32-40mm HAIGH AV3240)

ALL SINGLE FIXTURES DISCHARGING TO A DRAINAGE STACK OR FWG WITH A DEVELOPED LENGTH GREATER THAN 2.5m TO BE VENTED WITH AN AAV IN ACCORDANCE WITH AS/NZS 3500 PT. 2.2

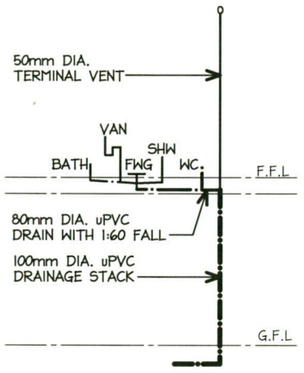

DRAINAGE STACK (DSI)
(DIAGRAMMATIC ONLY)

TYPICAL DRAINAGE ISOMETRICS

NOT TO SCALE
REFER TO AS/NZS 3500 FOR PIPE SIZES
ALL PIPE WORK TO BE HIDDEN IN WALL AND/OR CEILING FRAMING.

HAMILTON CITY COUNCIL
BUILDING UNIT
APPROVED
SUBJECT TO CONDITIONS
TO BE KEPT ON SITE

BYRNE+ENRIGHT ARCHITECTURE LTD
PO BOX 28162, ROTOTUNA, HAMILTON.
PH (07) 839 5774, Email:admin@designers.net.nz
LICENSED ARCHITECTURAL DESIGNERS
www.designers.net.nz

LICENSED BUILDING PRACTITIONERS www.dbh.govt.nz BUILDING CONFIDENCE

Issue:	Date:	Description:
WDI	27/07/17	WORKING DRAWINGS FOR BUILDING CONSENT
DD	12/06/17	DEVELOPED DESIGN
DRAFT RC	25/11/16	DRAFT RESOURCE CONSENT APPLICATION

job: PROPOSED HOUSE, UNIT 13 AT 36 BORMAN ROAD, HUNTINGTON, HAMILTON.

sheet: MIDFLOOR JOIST & PLUMBING PLAN

date: 08/08/17 | scale: 1:100 | design: P.E | drawn: P.B

COPYRIGHT
Contractor to check and verify all levels and dimensions on site prior to commencing work. Do not scale off drawings. All drawings and documentation remain the property of BYRNE & ENRIGHT ARCHITECTURE LTD. No duplication is permitted without prior written consent. Drawings to be read in conjunction with specification. Tradesmen are required to contact local T.A 24hrs prior to site inspections to inform of liscence number.

job no: 16/1824

sheet no: 2.7 of 33

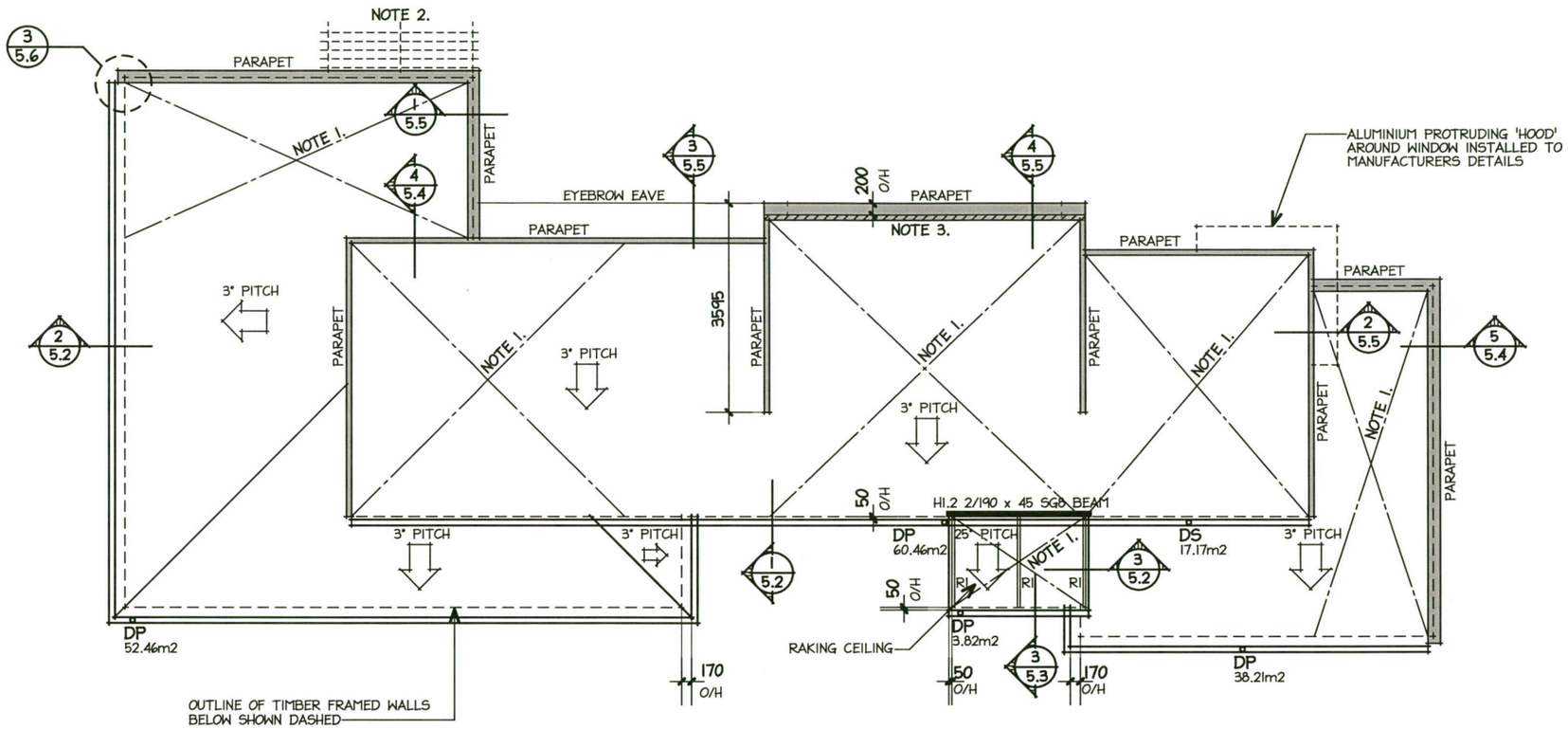

ROOF PLAN

ROOF CLADDING: MEDIUM WIND ZONE

25°/3° ST963 PROFILED COLORSTEEL LONGRUN ROOFING WITH VARYING OVERHANGS, ON THERMAKRAFT '215' SELF-SUPPORTING UNDERLAY (ON HEXMESH ON 3° ROOFS) ON H1.2 70 x 45mm PURLINS AT 900mm CRS. MAX. (FIRST PURLIN FROM FASCIA/RIDGE AT 700mm CTRS.) ON APPROVED GANGNAIL TRUSSES AT 900mm CTRS. MAX.

ALL ROOF PENETRATIONS SHALL BE FLASHED AS PER NZBC E2/AS1 EXTERNAL MOISTURE SECTION 8.4 PROFILED ROOF METAL CLADDING (8.4.17 ROOF PENETRATIONS) AS SHOWN IN FIG. 53 & 54

THERMAKRAFT 'WATERGATE PLUS' BDG WRAP FOR AIR BARRIER & TO GABLES.

ALL TRUSSES TO BE DESIGNED AND APPROVED BY A QUALIFIED TRUSS MANUFACTURER ABLE TO ISSUE A PRODUCER STATEMENT PRIOR TO BUILDING CONSENT APPROVAL, WHICH SHALL GUARANTEE SATISFACTORY PERFORMANCE WITHIN THE PARAMETERS OF THIS DESIGN.

THE TRUSS SYSTEM SHALL INCLUDE ROOF SPACE BRACING IN ACCORDANCE WITH NZS 3604:2011.

NOTES:

NOTE 1.

PAIR OF CROSSED LUMBERLOK 0.6 x 27mm STEEL STRIP BRACES, FIXED USING 5/75mm x 3.15mm DIA. FLAT HEAD NAILS AT EACH END & 1/75mm x 3.15mm NAIL AT EACH CROSSING

REFER TO TRUSS MANUFACTURERS DESIGN FOR STRIP BRACE FIXINGS & LOCATIONS

NOTE 2.

LOUVRETEC (OR SIM. APPROVED) LOUVRE SYSTEM INSTALLED STRICTLY TO MANUFACTURERS SPECIFICATIONS

NOTE 3.

PARALLEL CHORD TRUSS TO TRUSS MANUFACTURERS DESIGN & DETAIL

ROOF AREA LOWER ROOF: 77.32m2
ROOF AREA UPPER ROOF: 79.50m2
1x HIP/VALLEY BRACE / 50m2 MIN.
2x BRACES REQUIRED FOR LOWER ROOF
2x BRACES PROVIDED FOR LOWER ROOF
2x BRACES REQUIRED FOR UPPER ROOF
2x BRACES PROVIDED FOR UPPER ROOF

SOFFITS:

PAINTED FINISHED PVC JOINTED 4.5mm HARDIFLEX.

LEGEND:

DP – INDICATES 80mm DIA. uPVC DOWNPIPE (70m2 AREA MAX.)

DS – 74mm DIA. PVC DROPPER WITH SPREADER (80m2 PER DP)
DOWNPIPE SPREADERS AS PER 8.5.1 NZMRCOP MANUAL
ALLOW 80m2 OF CATCHMENT AREA PER DROPPER FOR DISCHARGE ONTO ASYMMETRICAL TRAPEZOIDAL PROFILED ROOFING, MIN. LENGTH OF SPREADER 400mm.

RI – H1.2 140 x 45 SLOPING RAFTERS AT 900mm CTRS. FIXED WITH 2/90 x 3.15 SKEW NAILS & 2 WIRE DOGS

HAMILTON CITY COUNCIL
BUILDING UNIT
APPROVED
SUBJECT TO CONDITIONS
TO BE KEPT ON SITE

BYRNE+ENRIGHT ARCHITECTURE LTD
PO BOX 28162, ROTOTUNA, HAMILTON.
PH (07) 839 5774, Email:admin@designers.net.nz
LICENSED ARCHITECTURAL DESIGNERS
www.designers.net.nz

LICENSED BUILDING PRACTITIONERS www.dbh.govt.nz BUILDING CONFIDENCE

Issue:	Date:	Description:
WDI	27/07/17	WORKING DRAWINGS FOR BUILDING CONSENT
DD	12/06/17	DEVELOPED DESIGN
DRAFT RC	25/11/16	DRAFT RESOURCE CONSENT APPLICATION

job: PROPOSED HOUSE, UNIT 13 AT 36 BORMAN ROAD, HUNTINGTON, HAMILTON.
sheet: ROOF PLAN
date: 08/08/17
scale: 1:100
design: P.E
drawn: P.B

COPYRIGHT
Contractor to check and verify all levels and dimensions on site prior to commencing work. Do not scale off drawings. All drawings and documentation remain the property of BYRNE & ENRIGHT ARCHITECTURE LTD. No duplication is permitted without prior written consent. Drawings to be read in conjunction with specification. Tradesmen are required to contact local T.A 24hrs prior to site inspections to inform of liscence number.

job no: 16/1824
sheet no: 2.8 of 33

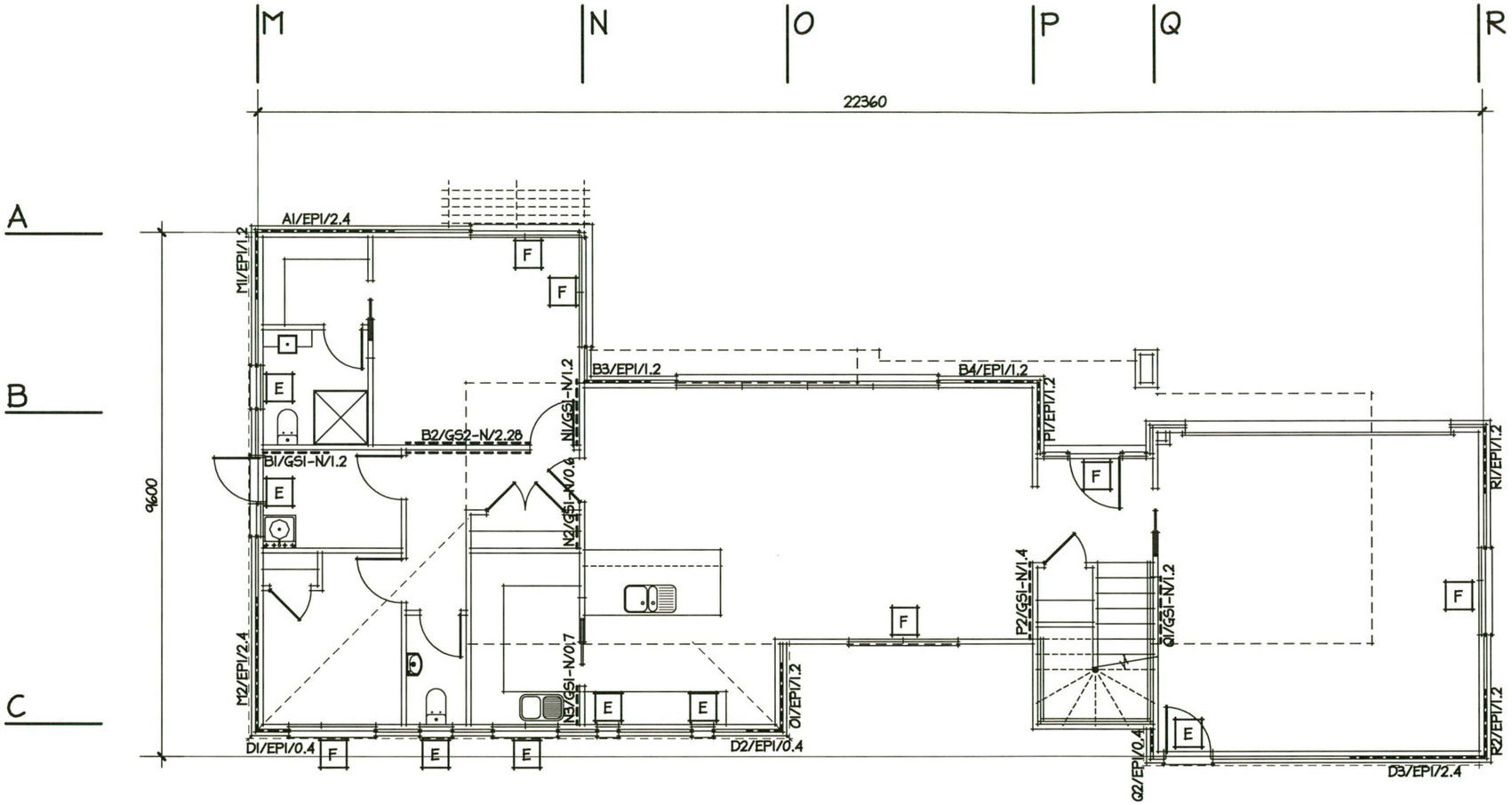

GENERAL NOTES:

REFER TO GIB EZYBRACE SYSTEMS TECHNICAL MANUAL (AUG 2016) FOR FULL BRACING INFORMATION AND BRACING CONNECTIONS.

THE TRUSS DESIGN SHALL INCLUDE ROOF BRACING SYSTEMS IN ACCORDANCE WITH NZS 3604:2011 CLAUSE 10.3 'SYSTEMS TO RESIST HORIZONTAL LOADS'.

USE FULL LENGTH OF WALL FOR GIB BRACES WHEN PRACTICAL, ONLY MINIMUM LENGTHS SHOWN TO ACHIEVE REQUIRED BRACING UNITS.

TOP PLATE FIXINGS AS PER CLAUSE 8.7.3 NZS3604:2011.

ALSO REFER TO FIGURE 8.16 - CONNECTING TOP PLATES TO EXTERNAL WALLS AT RIGHT ANGLES - WALLS CONTAINING BRACING.

WIND ZONE: MEDIUM
EARTHQUAKE ZONE: 1

E

REFER TO SHEET 5.12 FOR LINTEL FIXING DETAILS
TRUSS DESIGNER TO CONFIRM LINTEL FIXINGS PRIOR TO CONSTRUCTION

BRACING KEY:

D2 / GS1-N / 1.8

- D2: BRACE No. SEE BRACING CALCS.
- GS1-N: BRACE TYPE: SEE GIB EZYBRACE SYSTEMS TECHNICAL MANUAL (AUG 2016) AND ECOPLY BRACING LITERATURE (MAR 2014) FOR FULL BRACING INFORMATION AND BRACING CONNECTIONS.
- 1.8: BRACE PLAN LENGTH

HAMILTON CITY COUNCIL
BUILDING UNIT
APPROVED
SUBJECT TO CONDITIONS
TO BE KEPT ON SITE

GROUND FLOOR BRACING PLAN

REFER TO SPECIFICATION ADDENDA FOR BRACING CALCULATION SHEETS

BYRNE+ENRIGHT ARCHITECTURE LTD
PO BOX 28162, ROTOTUNA, HAMILTON.
PH (07) 839 5774, Email:admin@designers.net.nz
LICENSED ARCHITECTURAL DESIGNERS
www.designers.net.nz

LICENSED BUILDING PRACTITIONERS www.dbh.govt.nz BUILDING CONFIDENCE

Issue:	Date:	Description:
WDI	27/07/17	WORKING DRAWINGS FOR BUILDING CONSENT
DD	12/06/17	DEVELOPED DESIGN
DRAFT RC	25/11/16	DRAFT RESOURCE CONSENT APPLICATION

job: PROPOSED HOUSE, UNIT 13 AT 36 BORMAN ROAD, HUNTINGTON, HAMILTON.

sheet: GROUND FLOOR BRACING PLAN

date: 08/08/17

scale: 1:100

design: P.E

drawn: P.B

COPYRIGHT

Contractor to check and verify all levels and dimensions on site prior to commencing work. Do not scale off drawings. All drawings and documentation remain the property of BYRNE & ENRIGHT ARCHITECTURE LTD. No duplication is permitted without prior written consent. Drawings to be read in conjunction with specification. Tradesmen are required to contact local T.A 24hrs prior to site inspections to inform of liscence number.

job no: 16/1824

sheet no: 2.9 of 33

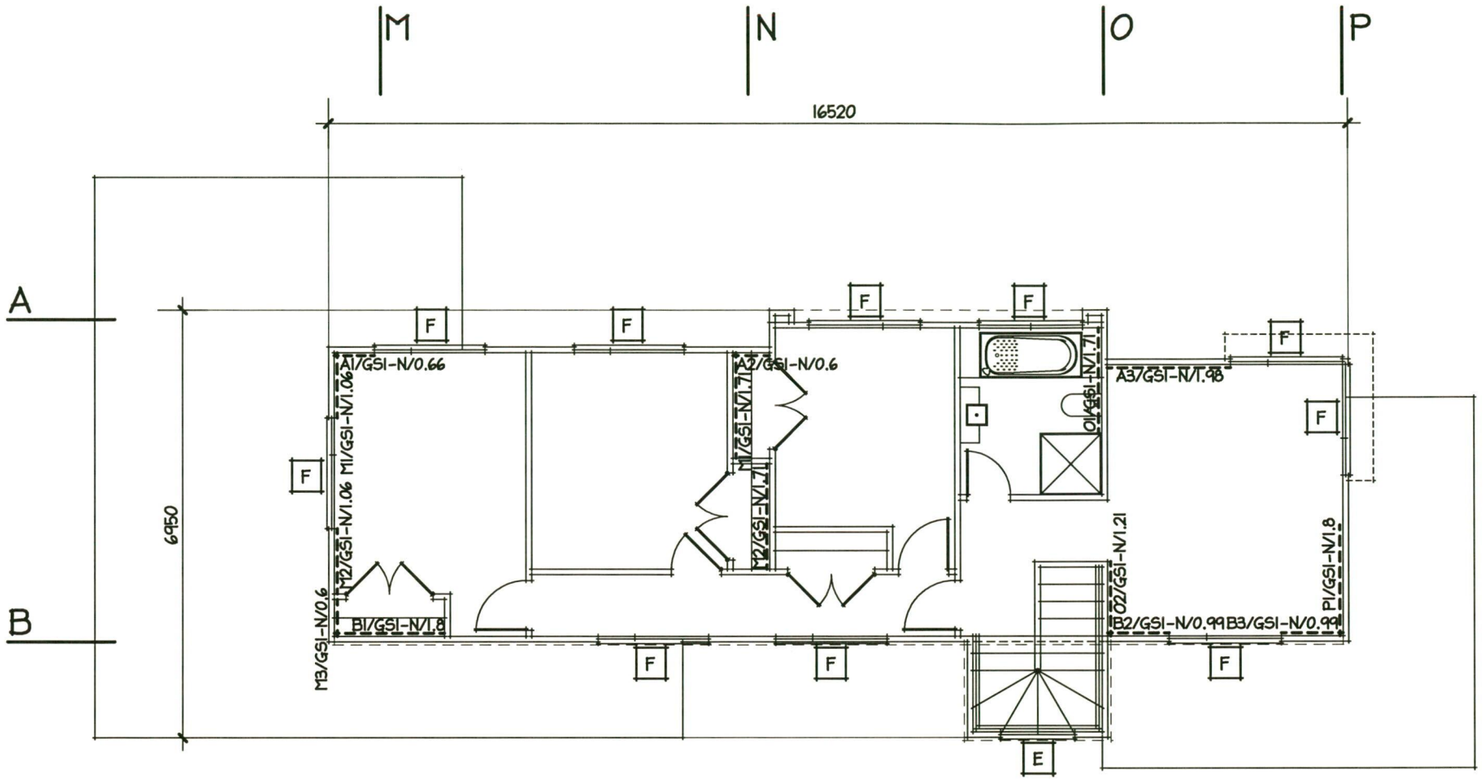

GENERAL NOTES:

REFER TO GIB EZYBRACE SYSTEMS TECHNICAL MANUAL (AUG 2016) FOR FULL BRACING INFORMATION AND BRACING CONNECTIONS.

THE TRUSS DESIGN SHALL INCLUDE ROOF BRACING SYSTEMS IN ACCORDANCE WITH NZS 3604:2011 CLAUSE 10.3 'SYSTEMS TO RESIST HORIZONTAL LOADS'.

USE FULL LENGTH OF WALL FOR GIB BRACES WHEN PRACTICAL, ONLY MINIMUM LENGTHS SHOWN TO ACHIEVE REQUIRED BRACING UNITS.

TOP PLATE FIXINGS AS PER CLAUSE 8.7.3 NZS3604:2011.

ALSO REFER TO FIGURE 8.16 - CONNECTING TOP PLATES TO EXTERNAL WALLS AT RIGHT ANGLES - WALLS CONTAINING BRACING.

WIND ZONE: MEDIUM
EARTHQUAKE ZONE: 1

E

REFER TO SHEET 5.12 FOR LINTEL FIXING DETAILS
TRUSS DESIGNER TO CONFIRM LINTEL FIXINGS PRIOR TO CONSTRUCTION

BRACING KEY:

D2 / GS1-N / 1.8

- BRACE No. SEE BRACING CALCS.
- BRACE TYPE: SEE GIB EZYBRACE SYSTEMS TECHNICAL MANUAL (AUG 2016) AND ECOPLY BRACING LITERATURE (MAR 2014) FOR FULL BRACING INFORMATION AND BRACING CONNECTIONS.
- BRACE PLAN LENGTH

HAMILTON CITY COUNCIL
BUILDING UNIT
APPROVED
SUBJECT TO CONDITIONS
TO BE KEPT ON SITE

UPPER FLOOR BRACING PLAN

REFER TO SPECIFICATION ADDENDA FOR BRACING CALCULATION SHEETS

BYRNE+ENRIGHT ARCHITECTURE LTD

PO BOX 28162, ROTOTUNA, HAMILTON.
PH (07) 839 5774, Email:admin@designers.net.nz
LICENSED ARCHITECTURAL DESIGNERS
www.designers.net.nz

LICENSED BUILDING PRACTITIONERS www.dbh.govt.nz BUILDING CONFIDENCE

Issue:	Date:	Description:
WDI	27/07/17	WORKING DRAWINGS FOR BUILDING CONSENT
DD	12/06/17	DEVELOPED DESIGN
DRAFT RC	25/11/16	DRAFT RESOURCE CONSENT APPLICATION

job: PROPOSED HOUSE, UNIT 13 AT 36 BORMAN ROAD, HUNTINGTON, HAMILTON.

sheet: UPPER FLOOR BRACING PLAN

date: 08/08/17

scale: 1:100

design: P.E

drawn: P.B

COPYRIGHT

Contractor to check and verify all levels and dimensions on site prior to commencing work. Do not scale off drawings. All drawings and documentation remain the property of BYRNE & ENRIGHT ARCHITECTURE LTD. No duplication is permitted without prior written consent. Drawings to be read in conjunction with specification. Tradesmen are required to contact local T.A 24hrs prior to site inspections to inform of liscence number.

job no: 16/1824

sheet no: 2.10 of 33

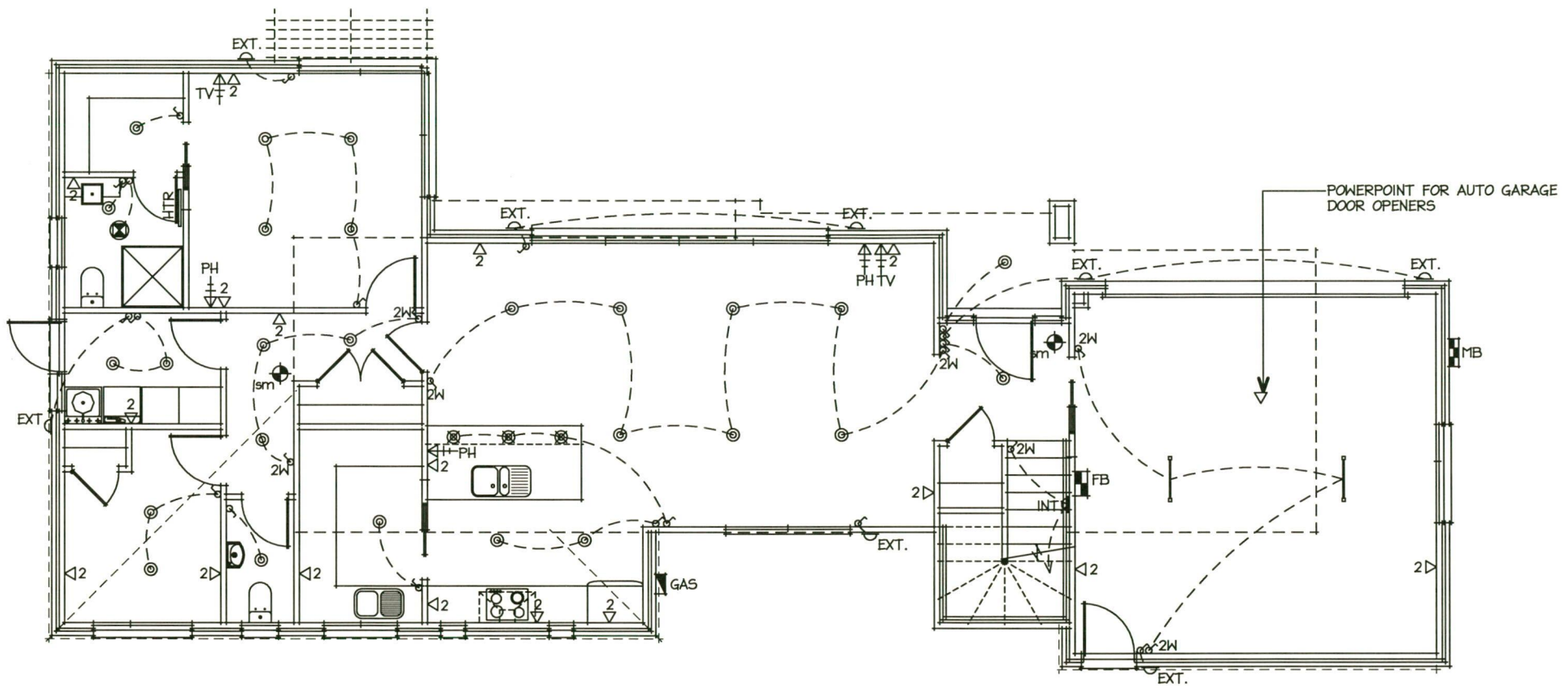

ELECTRICAL LEGEND	
2	POWER POINT (2 SOCKETS)
	LIGHT SWITCH
2W	LIGHT SWITCH (2 WAY)
PH	TELEPHONE/DATA POINT
TV	TELEVISION POINT
	METER BOX
	FUSE BOX
S	SENSOR LIGHT
	TASTIC 3 IN 1 (OR SIMILAR) WITH DUCT KIT VENTED TO OUTSIDE
	EXTRACT FAN TO EXTERIOR
	RECESSED LED DOWNLIGHTS (CA RATED)
	SELECTED PENDANT LIGHT
	SELECTED FLUORESCENT TUBE LIGHT
EXT.	SELECTED EXTERIOR WALL MOUNTED LIGHT
INT.	SELECTED INTERIOR WALL MOUNTED LIGHT
sm	TYPE 1 SMOKE ALARM WITH HUSH BUTTON
	SELECTED GAS HOTWATER UNIT
HTR	SELECTED HEATED TOWEL RAIL

GENERAL NOTES:

-OTHER ITEMS SHOWN ON FLOOR PLAN

-CONFIRM LOCATION OF ALL OUTLETS WITH KITCHEN PLAN.

-CONFIRM LOCATION OF ALL LIGHTS & OUTLETS WITH OWNER AT FRAMING STAGE, ON SITE, PRIOR TO COMMENCING PREWIRE.

-PROVIDE POWER TO OVEN/EXTRACTOR ETC. CONFIRM WITH KITCHEN DESIGN.

-WHERE DOWNLIGHTS ARE TO BE INSTALLED, CA RATED DOWNLIGHTS WILL BE SUPPLIED.

HAMILTON CITY COUNCIL
BUILDING UNIT
APPROVED
SUBJECT TO CONDITIONS
TO BE KEPT ON SITE

GROUND FLOOR ELECTRICAL PLAN

BYRNE+ENRIGHT ARCHITECTURE LTD
PO BOX 28162, ROTOTUNA, HAMILTON.
PH (07) 839 5774, Email:admin@designers.net.nz
LICENSED ARCHITECTURAL DESIGNERS
www.designers.net.nz

LICENSED BUILDING PRACTITIONER - BUILDING CONFIDENCE - www.dbh.govt.nz

Issue:	Date:	Description:
WDI	27/07/17	WORKING DRAWINGS FOR BUILDING CONSENT
DD	12/06/17	DEVELOPED DESIGN
DRAFT RC	25/11/16	DRAFT RESOURCE CONSENT APPLICATION

job: PROPOSED HOUSE, UNIT 13 AT 36 BORMAN ROAD, HUNTINGTON, HAMILTON.

sheet: GROUND FLOOR ELECTRICAL PLAN

date: 08/08/17

COPYRIGHT

scale: 1:100

design: P.E

drawn: P.B

Contractor to check and verify all levels and dimensions on site prior to commencing work. Do not scale off drawings.
All drawings and documentation remain the property of BYRNE & ENRIGHT ARCHITECTURE LTD. No duplication is permitted without prior written consent.
Drawings to be read in conjunction with specification. Tradesmen are required to contact local T.A 24hrs prior to site inspections to inform of licence number.

job no: 16/1824

sheet no: 2.11 of 33

ELECTRICAL LEGEND	
2	POWER POINT (2 SOCKETS)
	LIGHT SWITCH
2W	LIGHT SWITCH (2 WAY)
PH	TELEPHONE/DATA POINT
TV	TELEVISION POINT
	METER BOX
	FUSE BOX
S	SENSOR LIGHT
	TASTIC 3 IN 1 (OR SIMILAR) WITH DUCT KIT VENTED TO OUTSIDE
	SELECTED SURFACE MOUNTED LIGHT
sm	TYPE 1 SMOKE ALARM WITH HUSH BUTTON
H	HALOGEN RECESSED DOWNLIGHT (CA RATED)
INT.	SELECTED INTERIOR WALL MOUNTED LIGHT
HTR	SELECTED HEATED TOWEL RAIL

GENERAL NOTES:

-OTHER ITEMS SHOWN ON FLOOR PLAN

-CONFIRM LOCATION OF ALL OUTLETS WITH KITCHEN PLAN.

-CONFIRM LOCATION OF ALL LIGHTS & OUTLETS WITH OWNER AT FRAMING STAGE, ON SITE, PRIOR TO COMMENCING PREWIRE.

-PROVIDE POWER TO OVEN/EXTRACTOR ETC. CONFIRM WITH KITCHEN DESIGN.

-WHERE DOWNLIGHTS ARE TO BE INSTALLED, CA RATED DOWNLIGHTS WILL BE SUPPLIED.

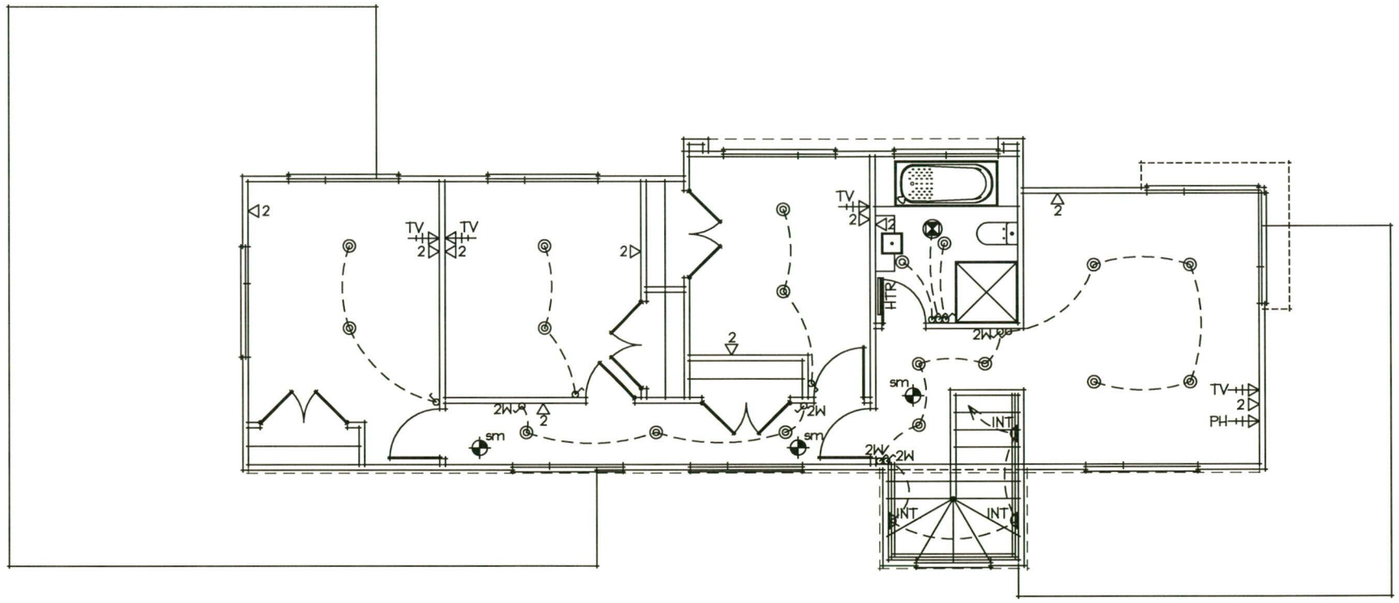

HAMILTON CITY COUNCIL
BUILDING UNIT
APPROVED
SUBJECT TO CONDITIONS
TO BE KEPT ON SITE

UPPER FLOOR ELECTRICAL PLAN

BYRNE+ENRIGHT ARCHITECTURE LTD
PO BOX 28162, ROTOTUNA, HAMILTON.
PH (07) 839 5774, Email:admin@designers.net.nz
LICENSED ARCHITECTURAL DESIGNERS
www.designers.net.nz

LICENSED BUILDING PRACTITIONERS BUILDING CONFIDENCE www.dbh.govt.nz

Issue:	Date:	Description:
WDI	27/07/17	WORKING DRAWINGS FOR BUILDING CONSENT
DD	12/06/17	DEVELOPED DESIGN
DRAFT RC	25/11/16	DRAFT RESOURCE CONSENT APPLICATION

job: PROPOSED HOUSE, UNIT 13 AT 36 BORMAN ROAD, HUNTINGTON, HAMILTON.

sheet: UPPER FLOOR ELECTRICAL PLAN

date: 08/08/17

COPYRIGHT

scale: 1:100

design: P.E

drawn: P.B

Contractor to check and verify all levels and dimensions on site prior to commencing work. Do not scale off drawings.
All drawings and documentation remain the property of BYRNE & ENRIGHT ARCHITECTURE LTD. No duplication is permitted without prior written consent.
Drawings to be read in conjunction with specification. Tradesmen are required to contact local T.A 24hrs prior to site inspections to inform of licence number.

job no: 16/1824

sheet no: 2.12 of 33

HI SCHEDULE METHOD CALCULATIONS

AREA OF WALLS AND GLAZING

	WALL AREA m²	GLAZING AREA m²
SOUTH ELEVATION:	40.06	4.31
WEST ELEVATION:	103.22	28.19
EAST ELEVATIONS:	103.22	15.33
TOTAL:	**246.50**	**47.83**

47.83m² / 246.50m² = 19.40% (TOTAL ALLOWED 30%)

19.40% < 30%

SOUTH/EAST/WEST ELEVATIONS:	246.50	47.83
NORTH ELEVATION:	40.06	8.80
TOTAL:	**286.56**	**56.63**

56.63m² / 286.56m² = 19.76% (TOTAL ALLOWED 30%)

19.76% < 30%

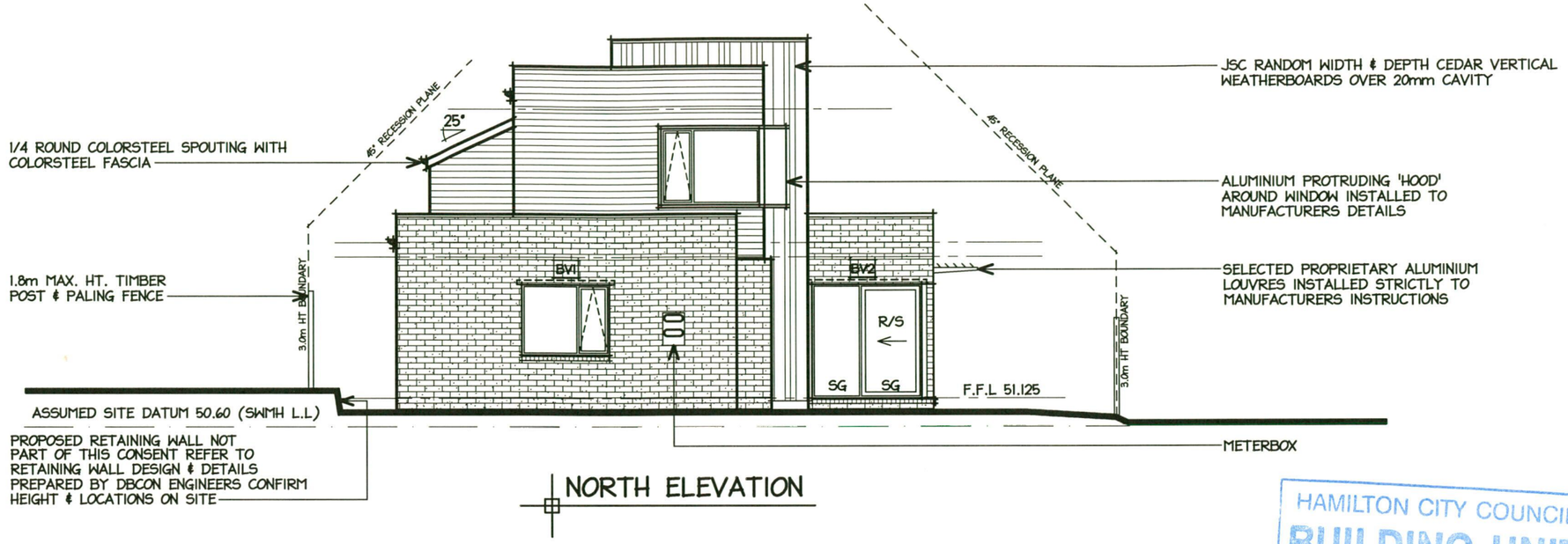

NORTH ELEVATION

HAMILTON CITY COUNCIL
BUILDING UNIT
APPROVED
SUBJECT TO CONDITIONS
TO BE KEPT ON SITE

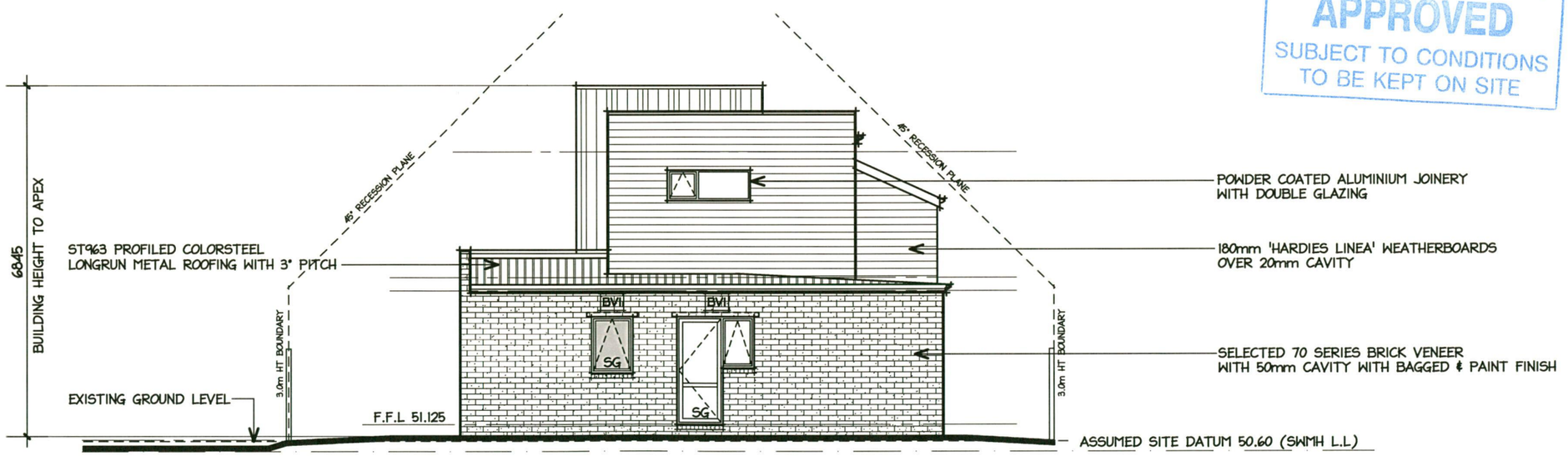

SOUTH ELEVATION

RISK MATRIX

RISK FACTOR	RISK SEVERITY: LOW	SCORE	MEDIUM	SCORE	HIGH	SCORE	VERY HIGH	SCORE	SUBTOTALS FOR EACH RISK FACTOR
WIND ZONE	0		0	0	1		2		0
NUMBER OF STOREYS	0		1		2	2	4		2
ROOF/WALL INTERSECTION DESIGN	0		1		3		5	5	5
EAVES WIDTH	0		1		2		5	5	5
ENVELOPE COMPLEXITY	0		1	1	3	3	6		3
DECK DESIGN	0	0	2		4		6		0
							TOTAL RISK SCORE		15

REFER TO NEW ZEALAND BUILDING CODE E2/AS1 3.1.1 TABLE 1 FOR DEFINITIONS OF RISK

BRICK VENEER LINTELS

LINTEL	SIZE	TYPE
BV1	80 x 80 x 6L	GALV STEEL ANGLE
BV2	125 x 75 x 10	GALV STEEL ANGLE

BRICK VENEER LINTELS NOTE:

1. WHERE OPENINGS ARE LESS THAN 2000mm WIDE, THE LINTEL BAR IS REQUIRED TO HAVE A SEATING OF 100mm EACH SIDE. IF THE OPENING EXCEEDS 2000mm, SEATING REQUIREMENT IS 200mm EACH SIDE.
2. PROP ALL LINTELS FOR MIN. 7 DAYS. LINTELS SIZED AS PER (TABLE 5.0 - LINTEL BARS SUPPORTING VENEER) IN BRANZ APPRAISED THINK BRICK NZ 2 STORY CLAY BRICK VENEER CONSTRUCTION - MADE EASY

NOTE:

NOTE: INSTALL ALL PROPRIETARY PRODUCTS IN ACCORDANCE WITH THE MANUFACTURERS INSTRUCTIONS, UNLESS SPECIFIED OTHERWISE.

REFER ALSO TO ARCHITECTURAL SPECIFICATION.

GLAZING NOTES:

1. DOOR AND WINDOW OPENING SIZES ARE APPROXIMATE.
2. ALL OPENING SIZES ARE TO BE MEASURED ON SITE PRIOR TO MANUFACTURE OF DOORS AND WINDOWS.
3. WANZ SUPPORT BAR TO FULL LENGTH OF ALL DOORS AND WINDOWS.
4. 'SG' DENOTES SAFTEY GLASS IN ACCORDANCE WITH NZS 4223.
5. ALL GLAZING EXCEPT GARAGE TO HAVE AN R-VALUE OF 0.26 OR BETTER.
6. DENOTES OPAQUE GLASS.

BYRNE+ENRIGHT ARCHITECTURE LTD
PO BOX 28162, ROTOTUNA, HAMILTON.
PH (07) 839 5774, Email:admin@designers.net.nz
LICENSED ARCHITECTURAL DESIGNERS
www.designers.net.nz

LICENSED BUILDING PRACTITIONERS BUILDING CONFIDENCE www.dbh.govt.nz

Issue:	Date:	Description:
WDI	27/07/17	WORKING DRAWINGS FOR BUILDING CONSENT
DD	12/06/17	DEVELOPED DESIGN
DRAFT RC	25/11/16	DRAFT RESOURCE CONSENT APPLICATION

job: PROPOSED HOUSE, UNIT 13 AT 36 BORMAN ROAD, HUNTINGTON, HAMILTON.

sheet: NORTH & SOUTH ELEVATIONS

date: 08/08/17

COPYRIGHT

scale: 1:100

design: P.E

drawn: P.B

Contractor to check and verify all levels and dimensions on site prior to commencing work. Do not scale off drawings. All drawings and documentation remain the property of BYRNE & ENRIGHT ARCHITECTURE LTD. No duplication is permitted without prior written consent. Drawings to be read in conjunction with specification. Tradesmen are required to contact local T.A 24hrs prior to site inspections to inform of liscence number.

job no: 16/1824

sheet no: 3.1 of 33

HAMILTON CITY COUNCIL
BUILDING UNIT
APPROVED
SUBJECT TO CONDITIONS
TO BE KEPT ON SITE

EAST ELEVATION

WEST ELEVATION

RISK MATRIX

RISK FACTOR	RISK SEVERITY: LOW	SCORE	MEDIUM	SCORE	HIGH	SCORE	VERY HIGH	SCORE	SUBTOTALS FOR EACH RISK FACTOR
WIND ZONE	0		0	0	1		2		0
NUMBER OF STOREYS	0		1		2	2	4		2
ROOF/WALL INTERSECTION DESIGN	0		1		3		5	5	5
EAVES WIDTH	0		1		2		5	5	5
ENVELOPE COMPLEXITY	0		1	1	3	3	6		3
DECK DESIGN	0	0	2		4		6		0
							TOTAL RISK SCORE		15

REFER TO NEW ZEALAND BUILDING CODE E2/AS1 3.1.1 TABLE 1 FOR DEFINITIONS OF RISK

BRICK VENEER LINTELS		
LINTEL	SIZE	TYPE
BV1	80 x 80 x 6L	GALV STEEL ANGLE
BV2	125 x 75 x 10	GALV STEEL ANGLE

BRICK VENEER LINTELS NOTE:

1. WHERE OPENINGS ARE LESS THAN 2000mm WIDE, THE LINTEL BAR IS REQUIRED TO HAVE A SEATING OF 100mm EACH SIDE. IF THE OPENING EXCEEDS 2000mm, SEATING REQUIREMENT IS 200mm EACH SIDE.
2. PROP ALL LINTELS FOR MIN. 7 DAYS. LINTELS SIZED AS PER (TABLE 5.0 - LINTEL BARS SUPPORTING VENEER) IN BRANZ APPRAISED THINK BRICK NZ 2 STORY CLAY BRICK VENEER CONSTRUCTION - MADE EASY

NOTE:

NOTE: INSTALL ALL PROPRIETARY PRODUCTS IN ACCORDANCE WITH THE MANUFACTURERS INSTRUCTIONS, UNLESS SPECIFIED OTHERWISE.

REFER ALSO TO ARCHITECTURAL SPECIFICATION.

GLAZING NOTES:

1. DOOR AND WINDOW OPENING SIZES ARE APPROXIMATE.
2. ALL OPENING SIZES ARE TO BE MEASURED ON SITE PRIOR TO MANUFACTURE OF DOORS AND WINDOWS.
3. WANZ SUPPORT BAR TO FULL LENGTH OF ALL DOORS AND WINDOWS.
4. 'SG' DENOTES SAFTEY GLASS IN ACCORDANCE WITH NZS 4223.
5. ALL GLAZING EXCEPT GARAGE TO HAVE AN R-VALUE OF 0.26 OR BETTER.
6. [ ] DENOTES OPAQUE GLASS.

BYRNE+ENRIGHT ARCHITECTURE LTD
PO BOX 28162, ROTOTUNA, HAMILTON.
PH (07) 839 5774, Email:admin@designers.net.nz
LICENSED ARCHITECTURAL DESIGNERS
www.designers.net.nz

LICENSED BUILDING PRACTITIONERS www.dbh.govt.nz BUILDING CONFIDENCE

Issue:	Date:	Description:
WDI	27/07/17	WORKING DRAWINGS FOR BUILDING CONSENT
DD	12/06/17	DEVELOPED DESIGN
DRAFT RC	25/11/16	DRAFT RESOURCE CONSENT APPLICATION

job: PROPOSED HOUSE, UNIT 13 AT 36 BORMAN ROAD, HUNTINGTON, HAMILTON.

sheet: EAST & WEST ELEVATIONS

date: 08/08/17

COPYRIGHT

scale: 1:100

design: P.E

drawn: P.B

Contractor to check and verify all levels and dimensions on site prior to commencing work. Do not scale off drawings. All drawings and documentation remain the property of BYRNE & ENRIGHT ARCHITECTURE LTD. No duplication is permitted without prior written consent. Drawings to be read in conjunction with specification. Tradesmen are required to contact local T.A 24hrs prior to site inspections to inform of liscence number.

job no: 16/1824

sheet no: 3.2 of 33

THIS PLAN TO BE READ IN CONJUNCTION WITH ENGINEERS DRAWINGS PREPARED BY DBCON ENGINEERS JOB REF #162550.09

WALL FRAMING FOR CEDAR WEATHERBOARDS TO HAVE NOGS AT 480mm CTRS. AS REQUIRED FOR CAVITY BATTENS

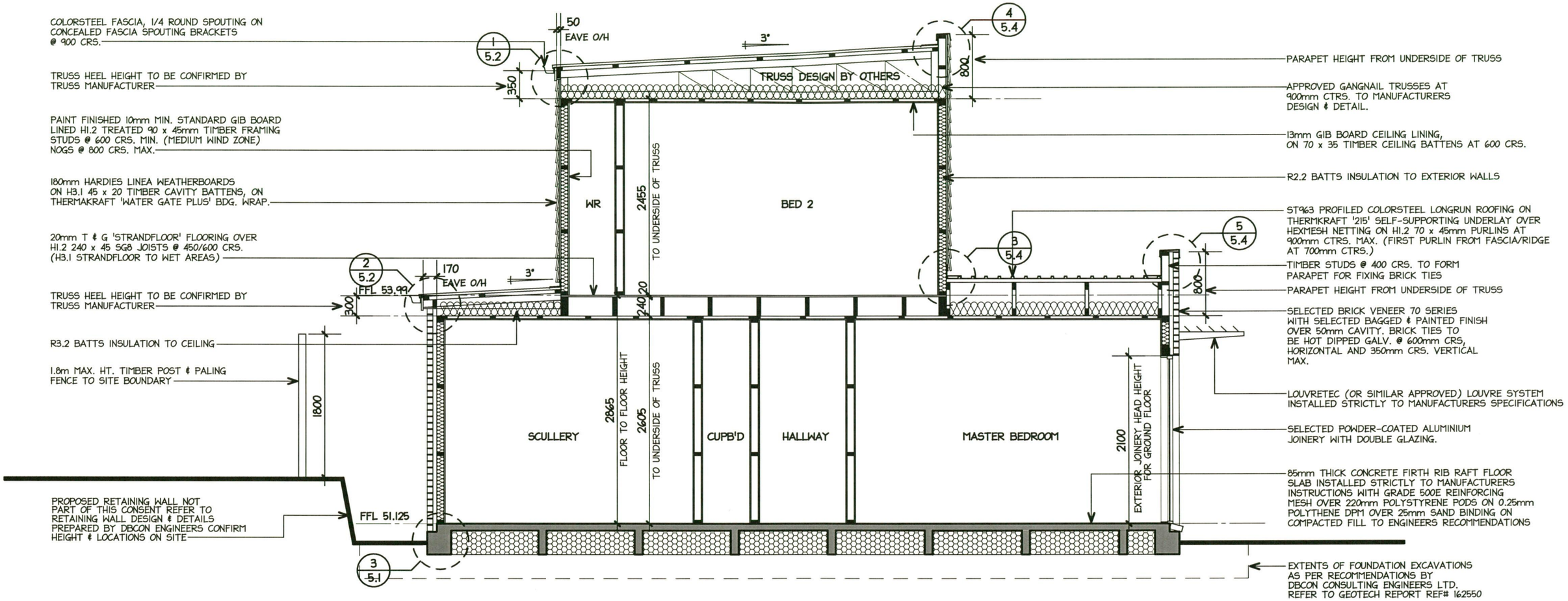

CROSS SECTION AA

HAMILTON CITY COUNCIL
BUILDING UNIT
APPROVED
SUBJECT TO CONDITIONS
TO BE KEPT ON SITE

LOWER WALLS OF 2 STOREY SG8 STUDS TO LOAD BEARING WALLS -Light roof -Medium Wind Zone Note: Nogs at 800 crs.			
LOADED DIMENSION OF WALL	STUD HEIGHT FOR MAX. HEIGHT OF:		
	2.4m at 600 CRS.	2.7m at 400 CRS.	3.0m at 400 CRS.
2.0	90 x 45	90 x 45	90 x 45
4.0	90 x 45	90 x 45	90 x 45
6.0	90 x 45	90 x 45	90 x 45

SINGLE OR TOP STOREY SG8 STUDS TO LOAD BEARING WALLS -Light roof -Medium Wind Zone Note: Nogs @ 800 crs.			
LOADED DIMENSION OF WALL	STUD HEIGHT FOR MAX. HEIGHT OF:		
	2.4m @ 600 CRS.	2.7m @ 600 CRS.	3.0m @ 400 CRS.
2.0	90 x 45	90 x 45	90 x 45
4.0	90 x 45	90 x 45	90 x 45
6.0	90 x 45	90 x 45	90 x 45

BYRNE+ENRIGHT ARCHITECTURE LTD
PO BOX 28162, ROTOTUNA, HAMILTON.
PH (07) 839 5774, Email:admin@designers.net.nz
LICENSED ARCHITECTURAL DESIGNERS
www.designers.net.nz

LICENSED BUILDING PRACTITIONERS www.dbh.govt.nz BUILDING CONFIDENCE

Issue:	Date:	Description:
WDI	27/07/17	WORKING DRAWINGS FOR BUILDING CONSENT
DD	12/06/17	DEVELOPED DESIGN
DRAFT RC	25/11/16	DRAFT RESOURCE CONSENT APPLICATION

job: PROPOSED HOUSE, UNIT 13 AT 36 BORMAN ROAD, HUNTINGTON, HAMILTON.

sheet: SECTION AA

date: 08/08/17

COPYRIGHT

scale: 1:50

design: P.E

drawn: P.B

Contractor to check and verify all levels and dimensions on site prior to commencing work. Do not scale off drawings. All drawings and documentation remain the property of BYRNE & ENRIGHT ARCHITECTURE LTD. No duplication is permitted without prior written consent. Drawings to be read in conjunction with specification. Tradesmen are required to contact local T.A 24hrs prior to site inspections to inform of liscence number.

job no: 16/1824

sheet no: 4.1 of 33

THIS PLAN TO BE READ IN CONJUNCTION WITH ENGINEERS DRAWINGS PREPARED BY DBCON ENGINEERS JOB REF #162550.09

WALL FRAMING FOR CEDAR WEATHERBOARDS TO HAVE NOGS AT 480mm CTRS. AS REQUIRED FOR CAVITY BATTENS

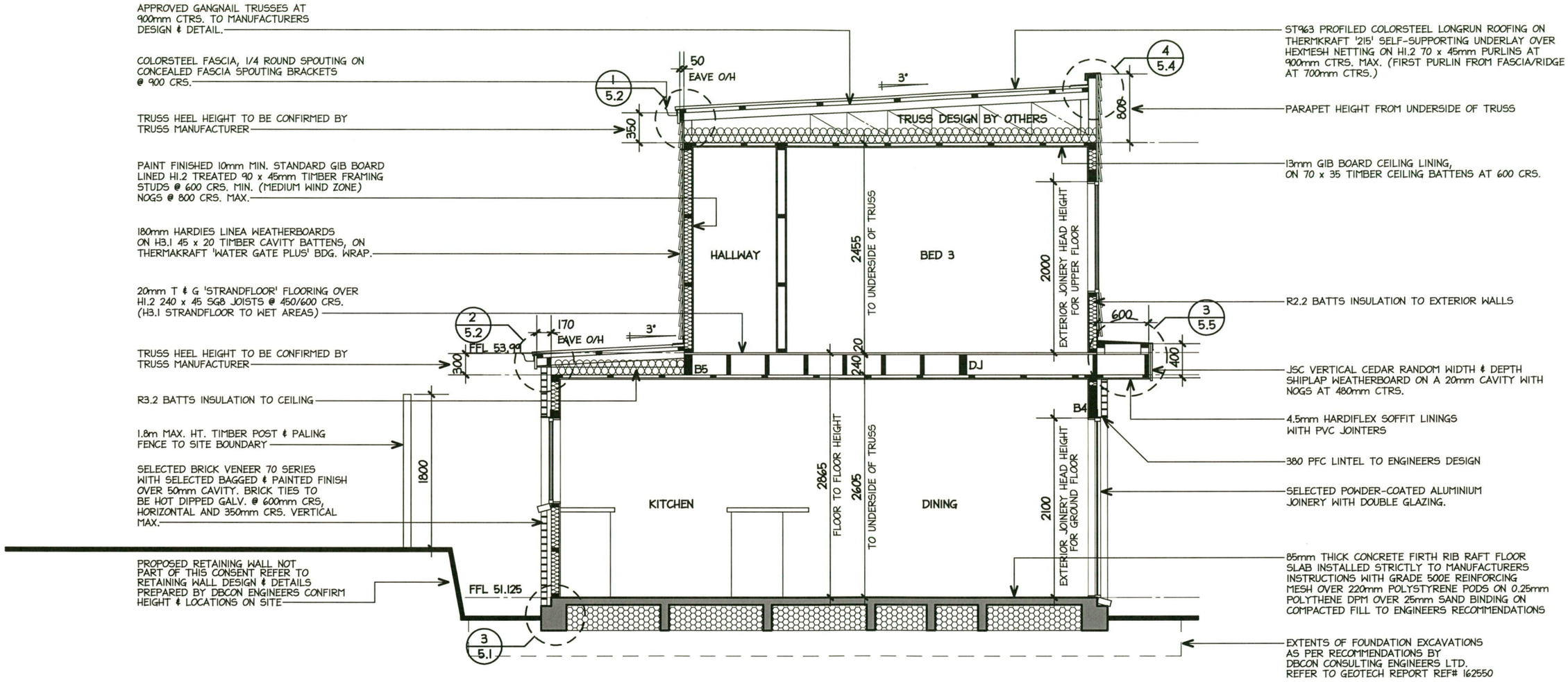

CROSS SECTION BB

LOWER WALLS OF 2 STOREY SG8 STUDS TO LOAD BEARING WALLS -Light roof -Medium Wind Zone Note: Nogs at 800 crs.			
LOADED DIMENSION OF WALL	STUD HEIGHT FOR MAX. HEIGHT OF:		
	2.4m at 600 CRS.	2.7m at 400 CRS.	3.0m at 400 CRS.
2.0	90 x 45	90 x 45	90 x 45
4.0	90 x 45	90 x 45	90 x 45
6.0	90 x 45	90 x 45	90 x 45

SINGLE OR TOP STOREY SG8 STUDS TO LOAD BEARING WALLS -Light roof -Medium Wind Zone Note: Nogs @ 800 crs.			
LOADED DIMENSION OF WALL	STUD HEIGHT FOR MAX. HEIGHT OF:		
	2.4m @ 600 CRS.	2.7m @ 600 CRS.	3.0m @ 400 CRS.
2.0	90 x 45	90 x 45	90 x 45
4.0	90 x 45	90 x 45	90 x 45
6.0	90 x 45	90 x 45	90 x 45

HAMILTON CITY COUNCIL
BUILDING UNIT
APPROVED
SUBJECT TO CONDITIONS TO BE KEPT ON SITE

BYRNE+ENRIGHT ARCHITECTURE LTD.
PO BOX 28162, ROTOTUNA, HAMILTON.
PH (07) 839 5774, Email:admin@designers.net.nz
LICENSED ARCHITECTURAL DESIGNERS
www.designers.net.nz

LICENSED BUILDING PRACTITIONER www.dbh.govt.nz BUILDING CONFIDENCE

Issue:	Date:	Description:
WDI	27/07/17	WORKING DRAWINGS FOR BUILDING CONSENT
DD	12/06/17	DEVELOPED DESIGN
DRAFT RC	25/11/16	DRAFT RESOURCE CONSENT APPLICATION

job: PROPOSED HOUSE, UNIT 13 AT 36 BORMAN ROAD, HUNTINGTON, HAMILTON.

sheet: SECTION BB

date: 08/08/17

COPYRIGHT
Contractor to check and verify all levels and dimensions on site prior to commencing work. Do not scale off drawings. All drawings and documentation remain the property of BYRNE & ENRIGHT ARCHITECTURE LTD. No duplication is permitted without prior written consent. Drawings to be read in conjunction with specification. Tradesmen are required to contact local T.A 24hrs prior to site inspections to inform of liscence number.

scale: 1:50

design: P.E

drawn: P.B

job no: 16/1824

sheet no: 4.2 of 33

THIS PLAN TO BE READ IN CONJUNCTION WITH ENGINEERS DRAWINGS PREPARED BY DBCON ENGINEERS JOB REF #162550.09

WALL FRAMING FOR CEDAR WEATHERBOARDS TO HAVE NOGS AT 480mm CTRS. AS REQUIRED FOR CAVITY BATTENS

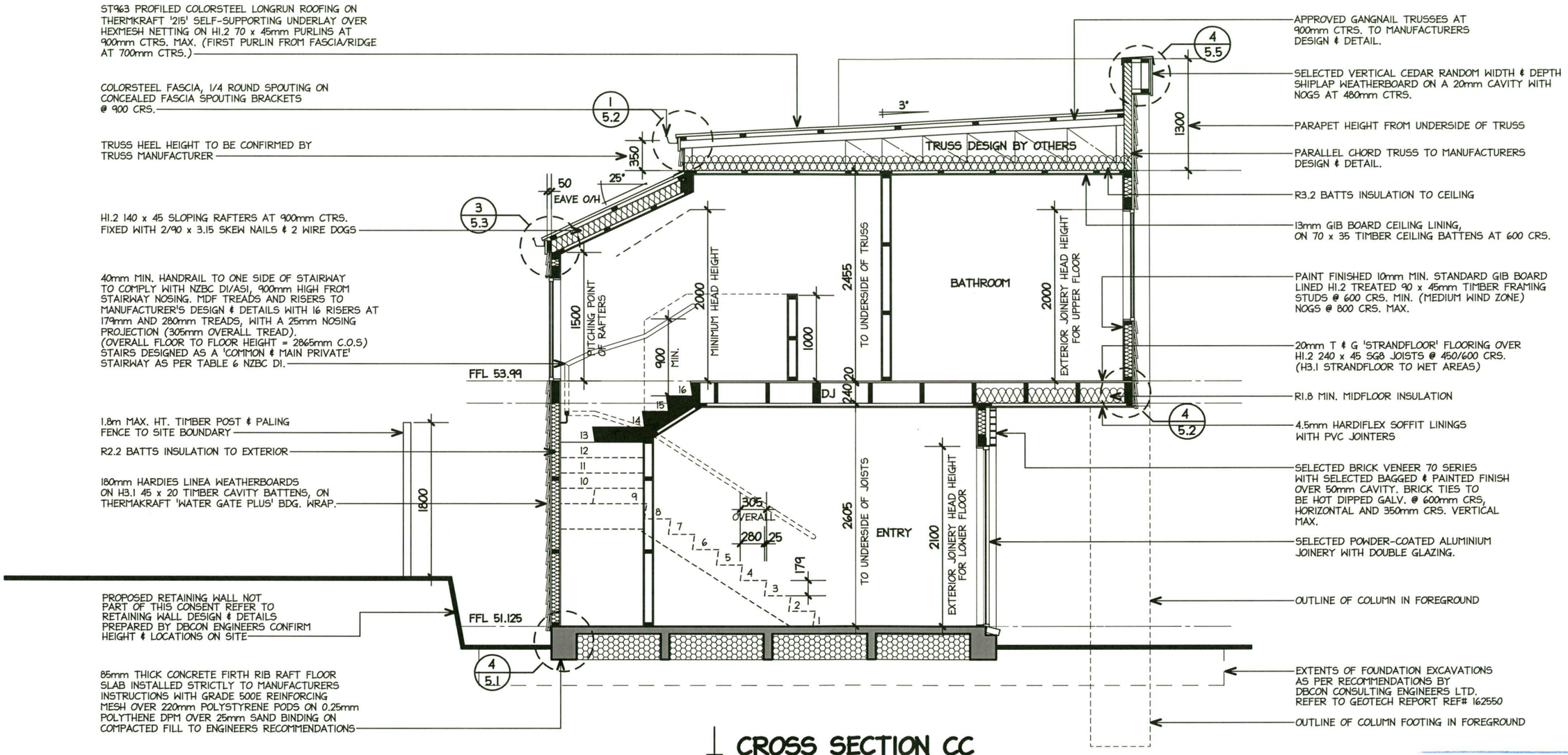

CROSS SECTION CC

LOWER WALLS OF 2 STOREY SG8 STUDS TO LOAD BEARING WALLS -Light roof -Medium Wind Zone Note: Nogs at 800 crs.			
LOADED DIMENSION OF WALL	STUD HEIGHT FOR MAX. HEIGHT OF:		
	2.4m at 600 CRS.	2.7m at 400 CRS.	3.0m at 400 CRS.
2.0	90 x 45	90 x 45	90 x 45
4.0	90 x 45	90 x 45	90 x 45
6.0	90 x 45	90 x 45	90 x 45

SINGLE OR TOP STOREY SG8 STUDS TO LOAD BEARING WALLS -Light roof -Medium Wind Zone Note: Nogs @ 800 crs.			
LOADED DIMENSION OF WALL	STUD HEIGHT FOR MAX. HEIGHT OF:		
	2.4m @ 600 CRS.	2.7m @ 600 CRS.	3.0m @ 400 CRS.
2.0	90 x 45	90 x 45	90 x 45
4.0	90 x 45	90 x 45	90 x 45
6.0	90 x 45	90 x 45	90 x 45

HAMILTON CITY COUNCIL
BUILDING UNIT
APPROVED
SUBJECT TO CONDITIONS
TO BE KEPT ON SITE

BYRNE+ENRIGHT ARCHITECTURE LTD
PO BOX 28162, ROTOTUNA, HAMILTON.
PH (07) 839 5774, Email:admin@designers.net.nz
LICENSED ARCHITECTURAL DESIGNERS
www.designers.net.nz

LICENSED BUILDING PRACTITIONERS - BUILDING CONFIDENCE - www.dbh.govt.nz

Issue:	Date:	Description:
WDI	27/07/17	WORKING DRAWINGS FOR BUILDING CONSENT
DD	12/06/17	DEVELOPED DESIGN
DRAFT RC	25/11/16	DRAFT RESOURCE CONSENT APPLICATION

job: PROPOSED HOUSE, UNIT 13 AT 36 BORMAN ROAD, HUNTINGTON, HAMILTON.

sheet: SECTION CC

date: 08/08/17

COPYRIGHT
Contractor to check and verify all levels and dimensions on site prior to commencing work. Do not scale off drawings. All drawings and documentation remain the property of BYRNE & ENRIGHT ARCHITECTURE LTD. No duplication is permitted without prior written consent. Drawings to be read in conjunction with specification. Tradesmen are required to contact local T.A 24hrs prior to site inspections to inform of liscence number.

scale: 1:50

design: P.E

drawn: P.B

job no: 16/1824

sheet no: 4.3 of 33

THIS PLAN TO BE READ IN CONJUNCTION WITH ENGINEERS DRAWINGS PREPARED BY DBCON ENGINEERS JOB REF #162550.09

WALL FRAMING FOR CEDAR WEATHERBOARDS TO HAVE NOGS AT 480mm CTRS. AS REQUIRED FOR CAVITY BATTENS

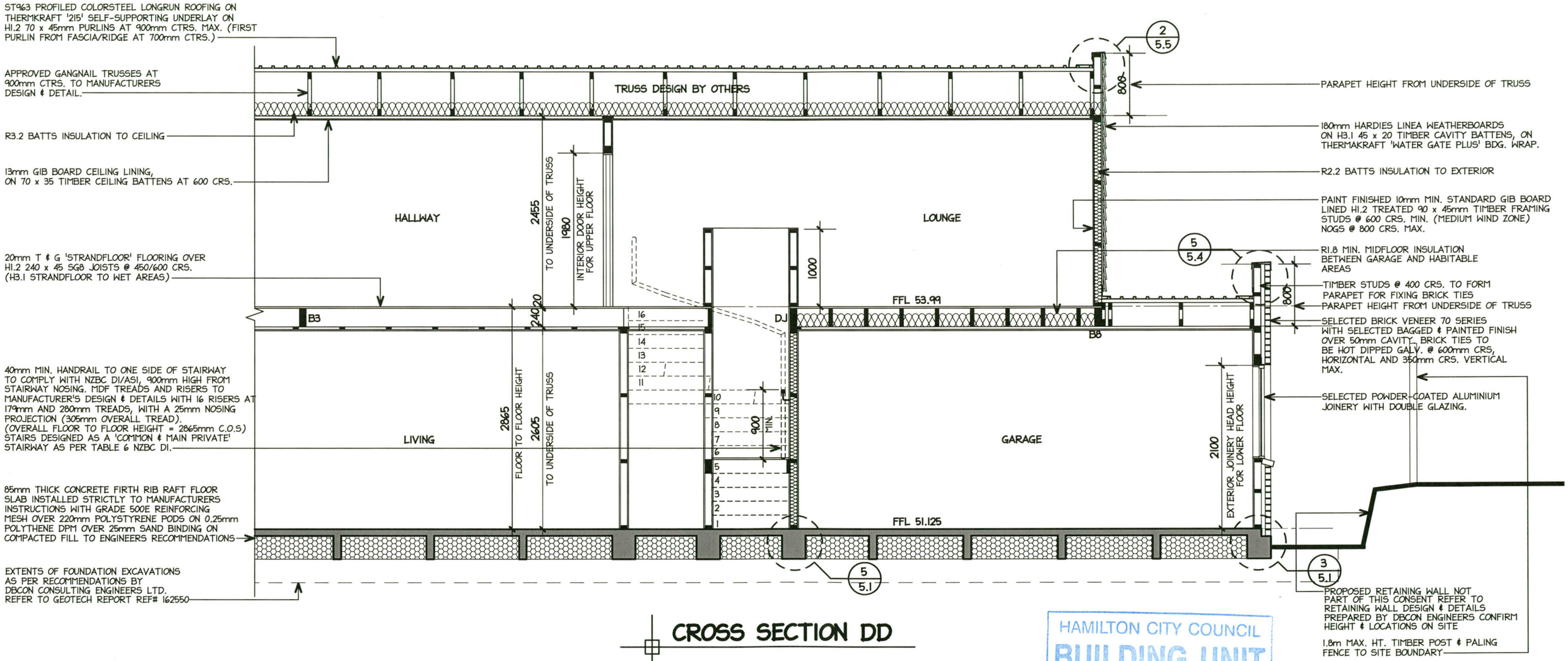

CROSS SECTION DD

LOWER WALLS OF 2 STOREY SG8 STUDS TO LOAD BEARING WALLS -Light roof -Medium Wind Zone Note: Nogs at 800 crs.			
LOADED DIMENSION OF WALL	STUD HEIGHT FOR MAX. HEIGHT OF:		
	2.4m at 600 CRS.	2.7m at 400 CRS.	3.0m at 400 CRS.
2.0	90 x 45	90 x 45	90 x 45
4.0	90 x 45	90 x 45	90 x 45
6.0	90 x 45	90 x 45	90 x 45

SINGLE OR TOP STOREY SG8 STUDS TO LOAD BEARING WALLS -Light roof -Medium Wind Zone Note: Nogs @ 800 crs.			
LOADED DIMENSION OF WALL	STUD HEIGHT FOR MAX. HEIGHT OF:		
	2.4m @ 600 CRS.	2.7m @ 600 CRS.	3.0m @ 400 CRS.
2.0	90 x 45	90 x 45	90 x 45
4.0	90 x 45	90 x 45	90 x 45
6.0	90 x 45	90 x 45	90 x 45

HAMILTON CITY COUNCIL
BUILDING UNIT
APPROVED
SUBJECT TO CONDITIONS TO BE KEPT ON SITE

BYRNE+ENRIGHT ARCHITECTURE LTD
PO BOX 28162, ROTOTUNA, HAMILTON.
PH (07) 839 5774, Email:admin@designers.net.nz
LICENSED ARCHITECTURAL DESIGNERS
www.designers.net.nz

LICENSED BUILDING PRACTITIONERS www.dbh.govt.nz BUILDING CONFIDENCE

Issue:	Date:	Description:
WDI	27/07/17	WORKING DRAWINGS FOR BUILDING CONSENT
DD	12/06/17	DEVELOPED DESIGN
DRAFT RC	25/11/16	DRAFT RESOURCE CONSENT APPLICATION

job: PROPOSED HOUSE, UNIT 13 AT 36 BORMAN ROAD, HUNTINGTON, HAMILTON.

sheet: SECTION DD

date: 08/08/17

scale: 1:50

design: P.E

drawn: P.B

COPYRIGHT
Contractor to check and verify all levels and dimensions on site prior to commencing work. Do not scale off drawings. All drawings and documentation remain the property of BYRNE & ENRIGHT ARCHITECTURE LTD. No duplication is permitted without prior written consent. Drawings to be read in conjunction with specification. Tradesmen are required to contact local T.A 24hrs prior to site inspections to inform of liscence number.

job no: 16/1824

sheet no: 4.4 of 33

ALL DETAILS NOT SHOWN ARE TO BE INSTALLED TO MANUFACTURERS INSTRUCTIONS & SHALL COMPLY WITH THE RELEVANT BUILDING CODE

MINIMUM REINFORCING COVER:

A) AGAINST GROUND	75mm
B) AGAINST FORMWORK	50mm
C) TOP COVER TO MESH	30mm

THESE DETAILS TO BE READ IN CONJUNCTION WITH FIRTH RIBRAFT MANUFACTURERS TECHNICAL MANUAL & DETAILS

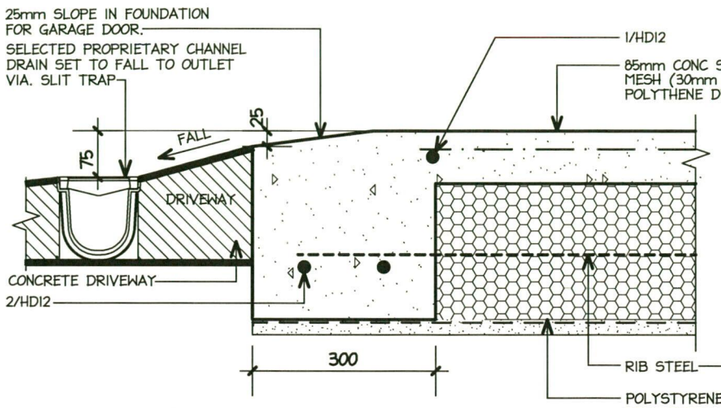

1 - TYPICAL GARAGE DOOR REBATE
scale 1:10

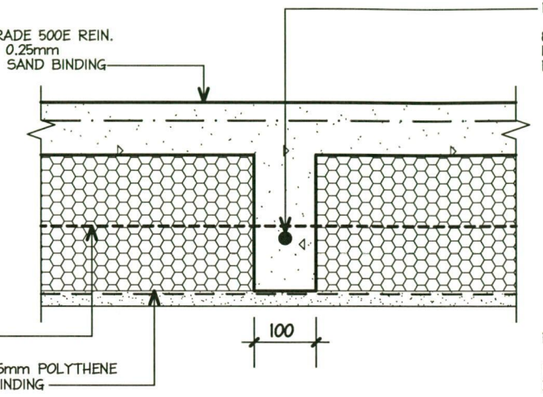

2 - STANDARD RIB
scale 1:10

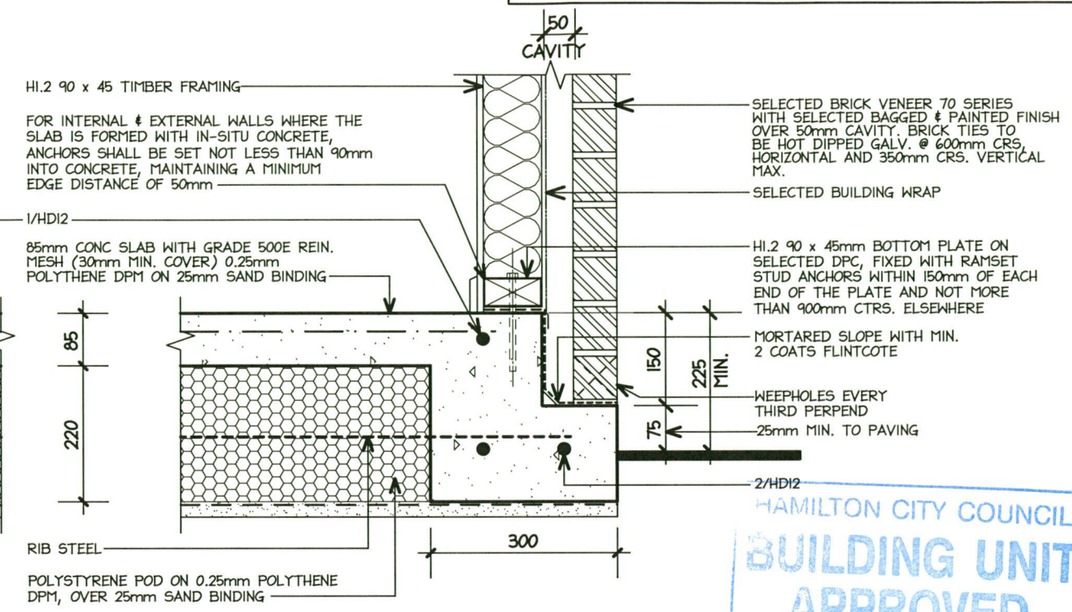

3 - TYPICAL BRICK VENEER FOOTING DETAIL
scale 1:10

HAMILTON CITY COUNCIL
BUILDING UNIT
APPROVED
SUBJECT TO CONDITIONS
TO BE KEPT ON SITE

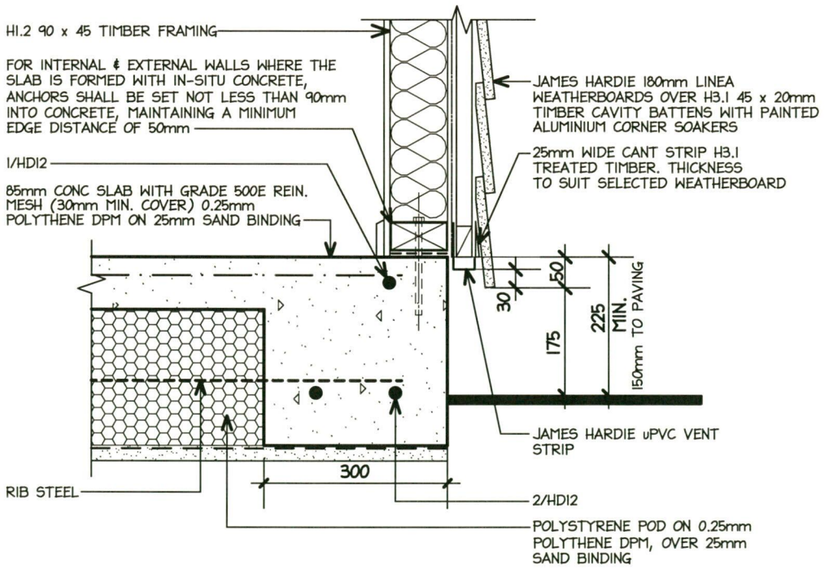

4 - TYPICAL LINEA WEATHERBOARD FOOTING DETAIL
scale 1:10

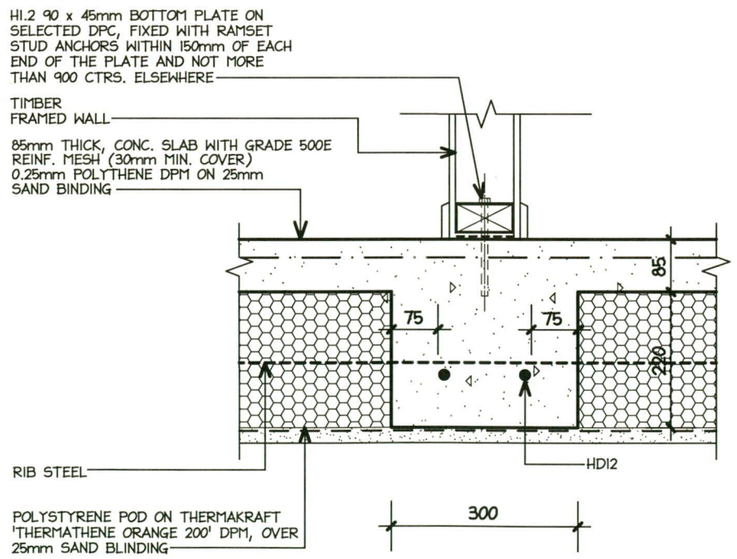

5 - SLAB THICKENING UNDER SINGLE TIMBER FRAMED LOAD BEARING WALL
scale 1:5

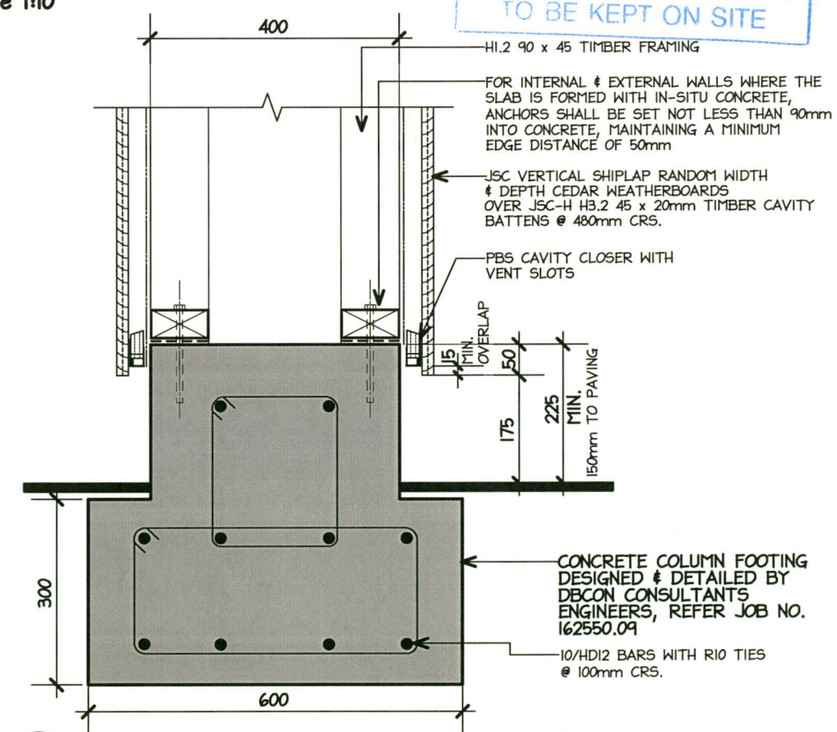

6 - VERTICAL SHIPLAP WEATHERBOARD COLUMN FOOTING DETAIL
scale 1:10

THIS DETAIL TO BE READ IN CONJUNCTION WITH ENGINEERS DRAWINGS PREPARED BY DBCON ENGINEERS JOB REF 162550.09

BYRNE+ENRIGHT ARCHITECTURE LTD
PO BOX 28162, ROTOTUNA, HAMILTON.
PH (07) 839 5774, Email:admin@designers.net.nz
LICENSED ARCHITECTURAL DESIGNERS
www.designers.net.nz

LICENSED BUILDING PRACTITIONERS - BUILDING CONFIDENCE - www.dbh.govt.nz

Issue:	Date:	Description:
WDI	27/07/17	WORKING DRAWINGS FOR BUILDING CONSENT
DD	12/06/17	DEVELOPED DESIGN
DRAFT RC	25/11/16	DRAFT RESOURCE CONSENT APPLICATION

job: PROPOSED HOUSE, UNIT 13 AT 36 BORMAN ROAD, HUNTINGTON, HAMILTON.

sheet: CONSTRUCTION DETAILS 1

date: 08/08/17

scale: 1:10

design: P.E

drawn: P.B

COPYRIGHT
Contractor to check and verify all levels and dimensions on site prior to commencing work. Do not scale off drawings. All drawings and documentation remain the property of BYRNE & ENRIGHT ARCHITECTURE LTD. No duplication is permitted without prior written consent. Drawings to be read in conjunction with specification. Tradesmen are required to contact local T.A 24hrs prior to site inspections to inform of liscence number.

job no: 16/1824

sheet no: 5.1 of 33

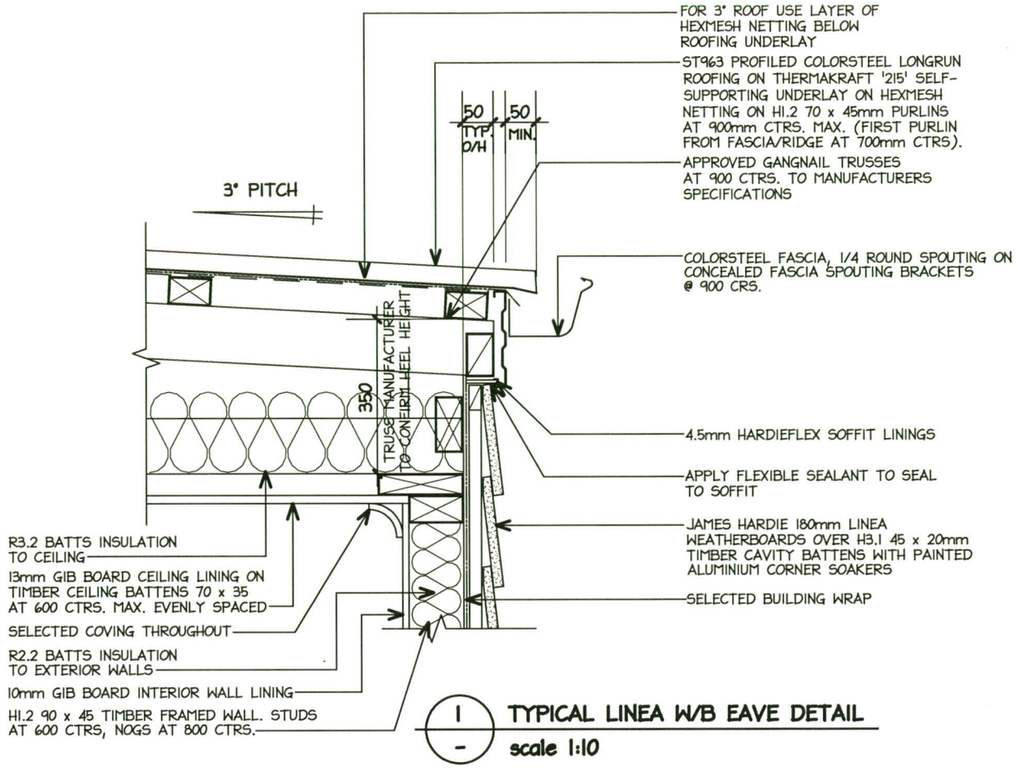

1 – TYPICAL LINEA W/B EAVE DETAIL
scale 1:10

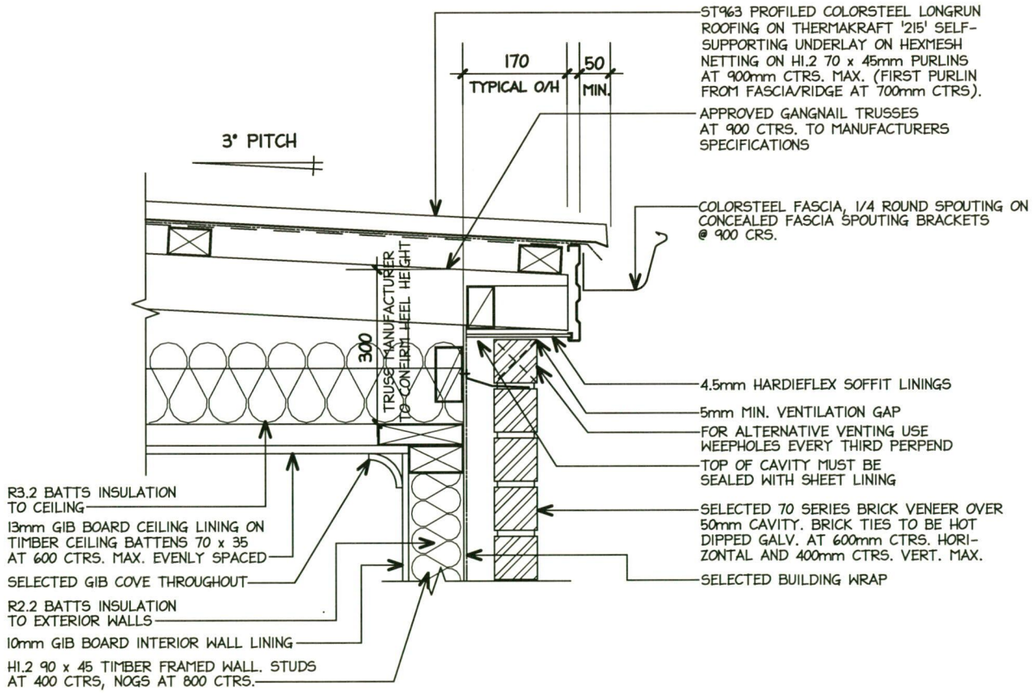

2 – TYPICAL BRICK VENEER EAVE DETAIL
scale 1:10

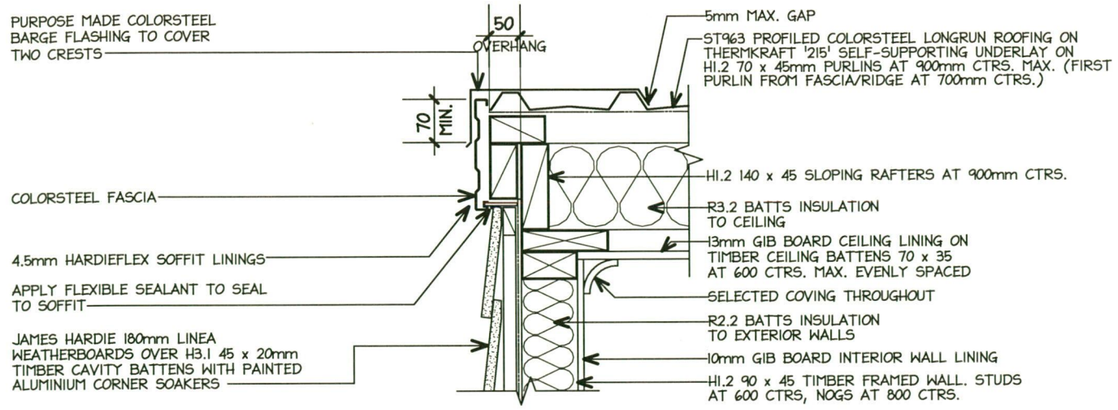

3 – TYPICAL LINEA WEATHERBOARD BARGE/GABLE DETAIL
scale 1:10

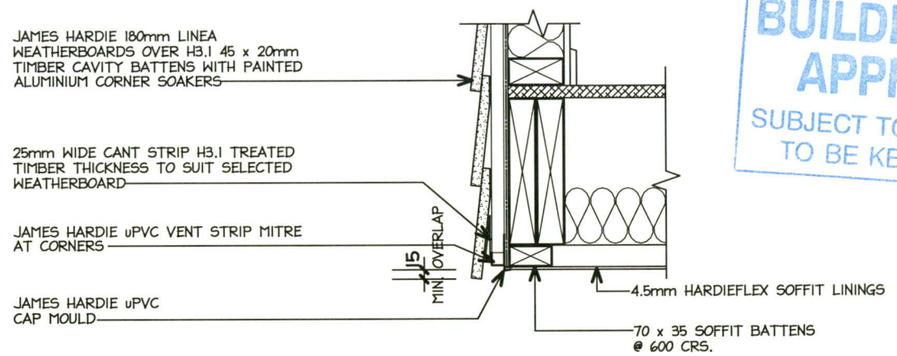

4 – TYPICAL HARDIES LINEA W/B SOFFIT EDGE DETAIL
scale 1:10

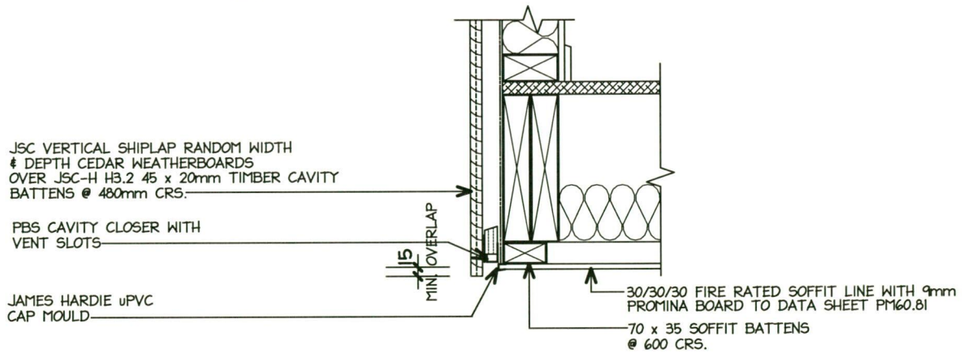

5 – JSC VERTICAL SHIPLAP W/B SOFFIT EDGE DETAIL
scale 1:10

HAMILTON CITY COUNCIL
BUILDING UNIT
APPROVED
SUBJECT TO CONDITIONS TO BE KEPT ON SITE

BYRNE+ENRIGHT ARCHITECTURE LTD
PO BOX 28162, ROTOTUNA, HAMILTON.
PH (07) 839 5774, Email:admin@designers.net.nz
LICENSED ARCHITECTURAL DESIGNERS
www.designers.net.nz

LICENSED BUILDING PRACTITIONER – BUILDING CONFIDENCE – www.dbh.govt.nz

Issue:	Date:	Description:
WDI	27/07/17	WORKING DRAWINGS FOR BUILDING CONSENT
DD	12/06/17	DEVELOPED DESIGN
DRAFT RC	25/11/16	DRAFT RESOURCE CONSENT APPLICATION

job: PROPOSED HOUSE, UNIT 13 AT 36 BORMAN ROAD, HUNTINGTON, HAMILTON.

sheet: CONSTRUCTION DETAILS 2

date: 08/08/17 | scale: 1:10 | design: P.E | drawn: P.B

COPYRIGHT
Contractor to check and verify all levels and dimensions on site prior to commencing work. Do not scale off drawings. All drawings and documentation remain the property of BYRNE & ENRIGHT ARCHITECTURE LTD. No duplication is permitted without prior written consent. Drawings to be read in conjunction with specification. Tradesmen are required to contact local T.A 24hrs prior to site inspections to inform of liscence number.

job no: 16/1824

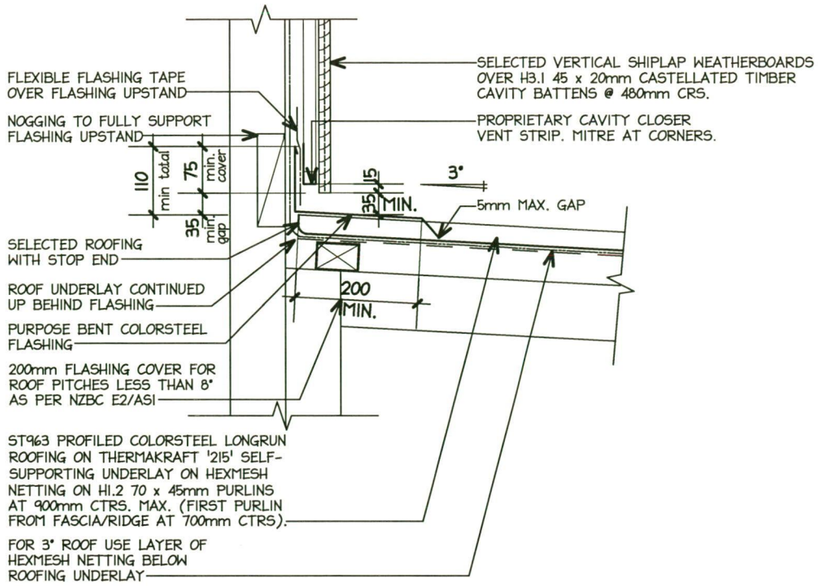

1 / - TYPICAL VERTICAL SHIPLAP RAKING FLASHING DETAIL

scale 1:10

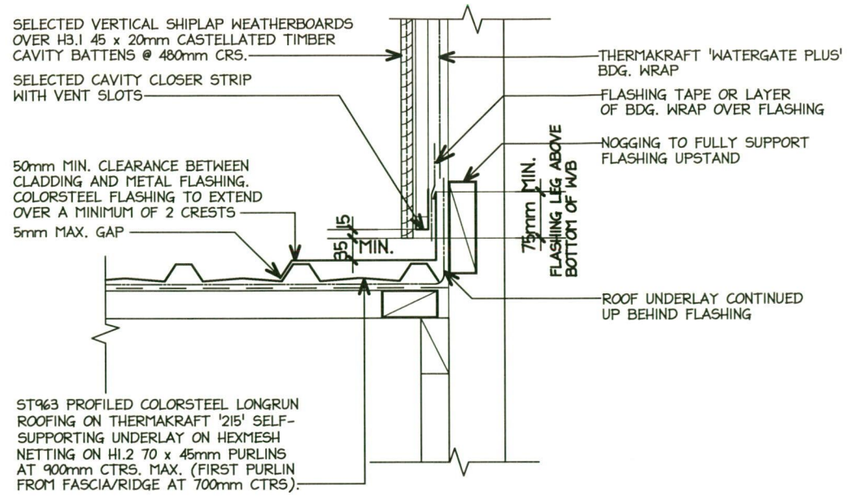

2 / - TYPICAL VERTICAL SHIPLAP WEATHERBOARD PARALLEL APRON FLASHING DETAIL

scale 1:10

HAMILTON CITY COUNCIL
BUILDING UNIT
APPROVED
SUBJECT TO CONDITIONS
TO BE KEPT ON SITE

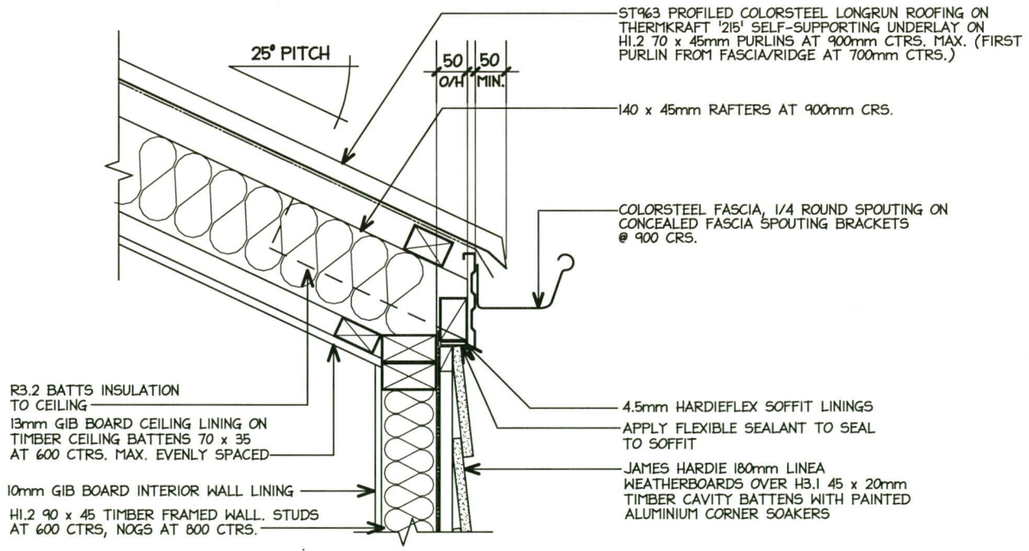

3 / - TYPICAL LINEA W/B COVED EAVE DETAIL

scale 1:10

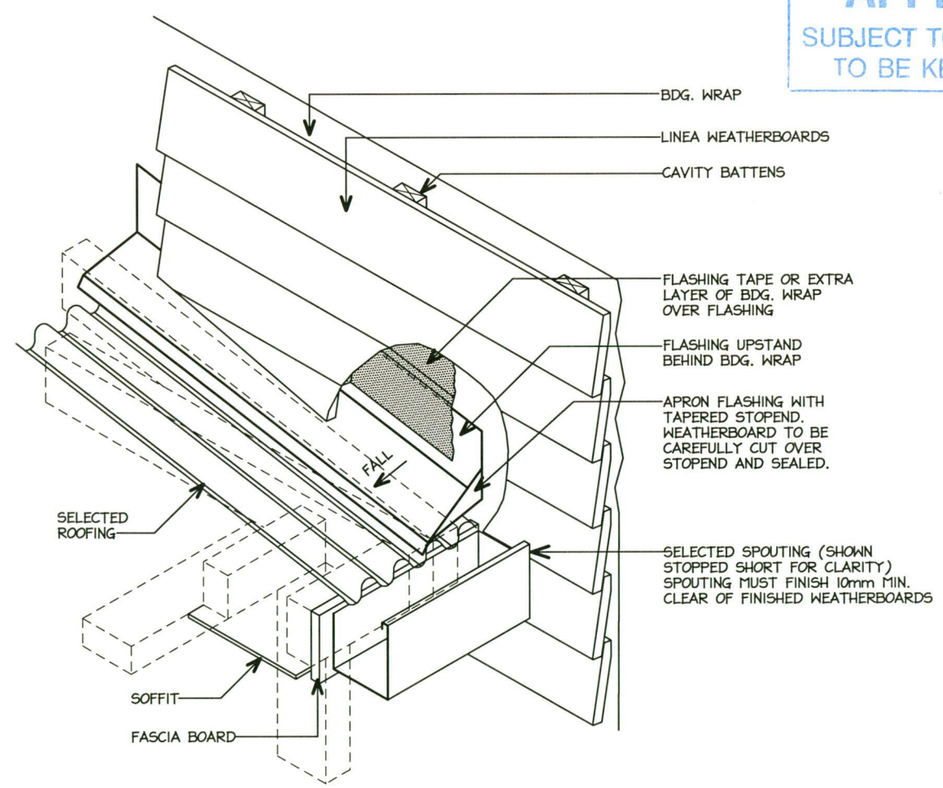

4 / - TYPICAL JUNCTION BETWEEN WEATHERBOARD & FASCIA BOARD

N.T.S

BYRNE+ENRIGHT ARCHITECTURE LTD
PO BOX 28162, ROTOTUNA, HAMILTON.
PH (07) 839 5774, Email:admin@designers.net.nz
LICENSED ARCHITECTURAL DESIGNERS
www.designers.net.nz

LICENSED BUILDING PRACTITIONERS www.dbh.govt.nz BUILDING CONFIDENCE

Issue:	Date:	Description:
WDI	27/07/17	WORKING DRAWINGS FOR BUILDING CONSENT
DD	12/06/17	DEVELOPED DESIGN
DRAFT RC	25/11/16	DRAFT RESOURCE CONSENT APPLICATION

job: PROPOSED HOUSE, UNIT 13 AT 36 BORMAN ROAD, HUNTINGTON, HAMILTON.

sheet: CONSTRUCTION DETAILS 3

date: 08/08/17

scale: 1:10

design: P.E

drawn: P.B

COPYRIGHT
Contractor to check and verify all levels and dimensions on site prior to commencing work. Do not scale off drawings. All drawings and documentation remain the property of BYRNE & ENRIGHT ARCHITECTURE LTD. No duplication is permitted without prior written consent. Drawings to be read in conjunction with specification. Tradesmen are required to contact local T.A 24hrs prior to site inspections to inform of licence number.

job no: 16/1824

sheet no: 5.3 of 33

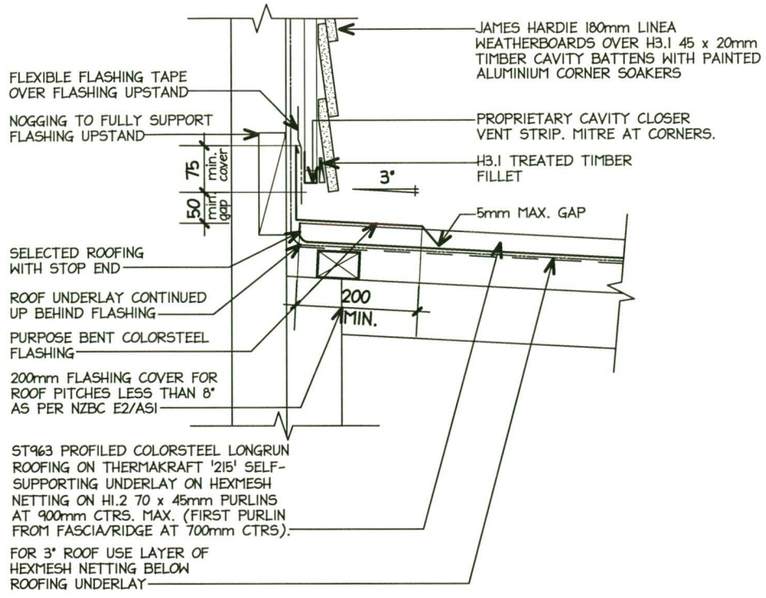

1 / - TYPICAL LINEA WEATHERBOARD RAKING FLASHING DETAIL
scale 1:10

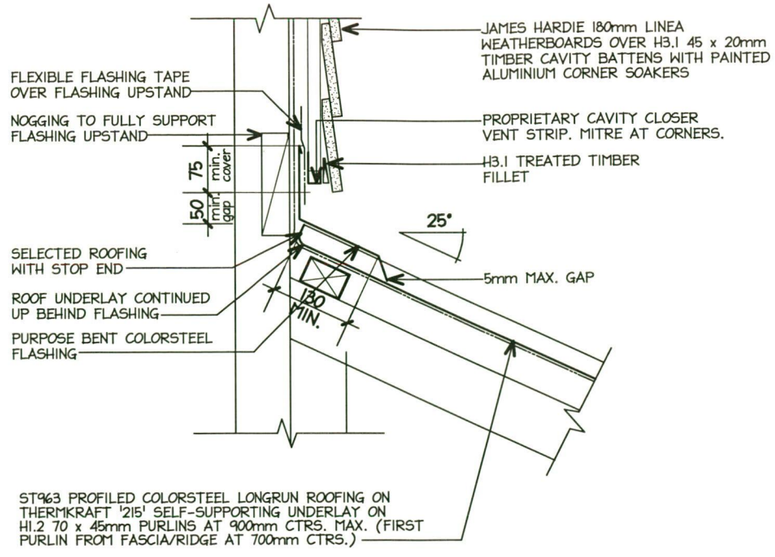

2 / - TYPICAL LINEA WEATHERBOARD RAKING FLASHING DETAIL
scale 1:10

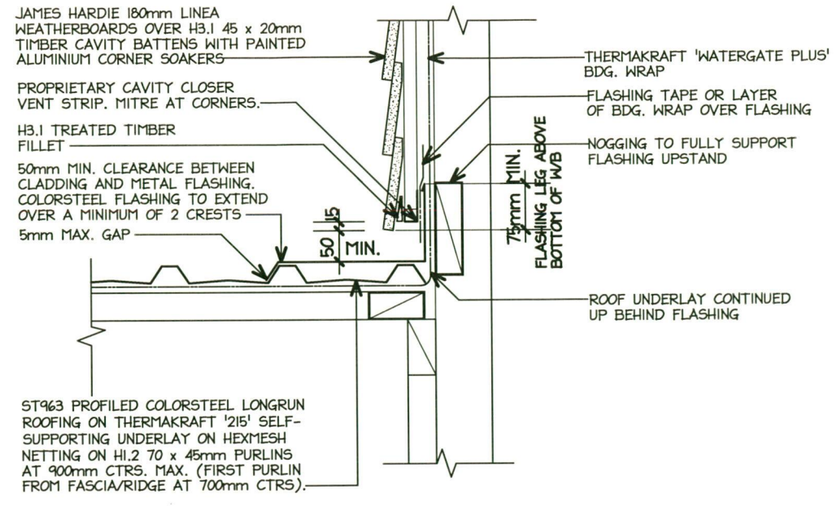

3 / - TYPICAL LINEA WEATHERBOARD PARALLEL APRON FLASHING DETAIL
scale 1:10

HAMILTON CITY COUNCIL
BUILDING UNIT
APPROVED
SUBJECT TO CONDITIONS
TO BE KEPT ON SITE

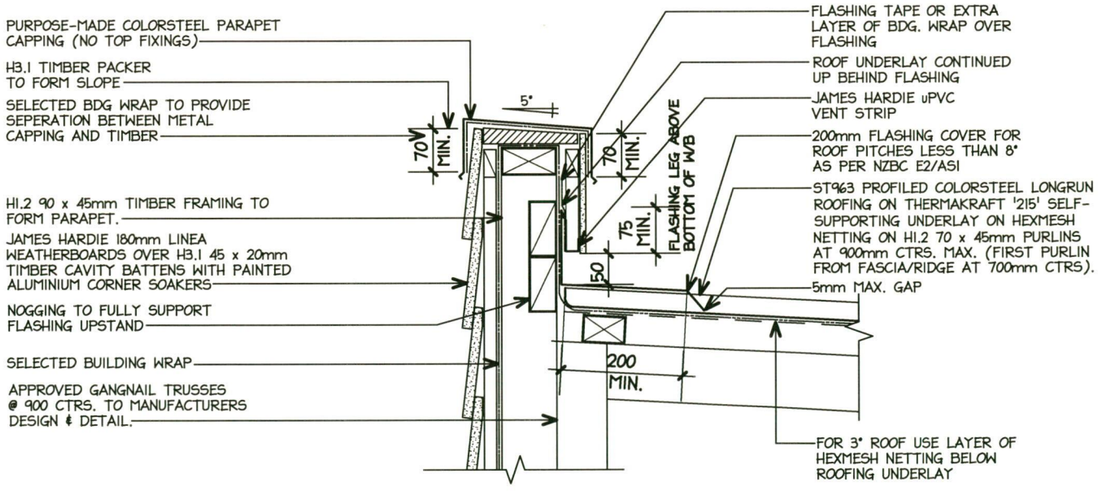

4 / - TYPICAL LINEA WEATHERBOARD RAKING APRON PARAPET DETAIL
scale 1:10

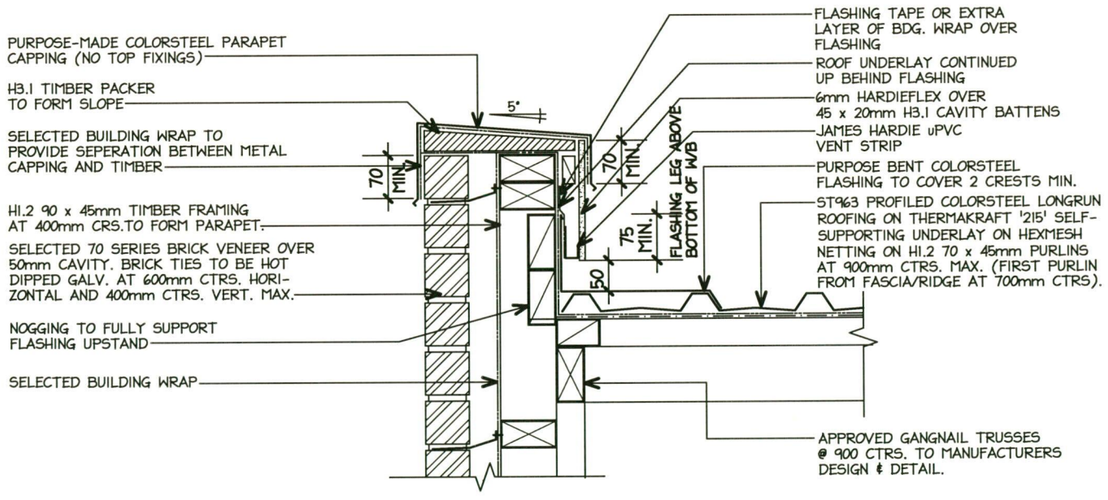

5 / - TYPICAL BRICK VENEER PARAPET DETAIL
scale 1:10

BYRNE+ENRIGHT ARCHITECTURE LTD.
PO BOX 28162, ROTOTUNA, HAMILTON.
PH (07) 839 5774, Email:admin@designers.net.nz
LICENSED ARCHITECTURAL DESIGNERS
www.designers.net.nz

LICENSED BUILDING PRACTITIONER www.dbh.govt.nz BUILDING CONFIDENCE

Issue:	Date:	Description:
WDI	27/07/17	WORKING DRAWINGS FOR BUILDING CONSENT
DD	12/06/17	DEVELOPED DESIGN
DRAFT RC	25/11/16	DRAFT RESOURCE CONSENT APPLICATION

job: PROPOSED HOUSE, UNIT 13 AT 36 BORMAN ROAD, HUNTINGTON, HAMILTON.

sheet: CONSTRUCTION DETAILS 4

date: 08/08/17

scale: 1:10

design: P.E

drawn: P.B

COPYRIGHT
Contractor to check and verify all levels and dimensions on site prior to commencing work. Do not scale off drawings. All drawings and documentation remain the property of BYRNE & ENRIGHT ARCHITECTURE LTD. No duplication is permitted without prior written consent. Drawings to be read in conjunction with specification. Tradesmen are required to contact local T.A 24hrs prior to site inspections to inform of liscence number.

job no: 16/1824

sheet no: 5.4 of 33

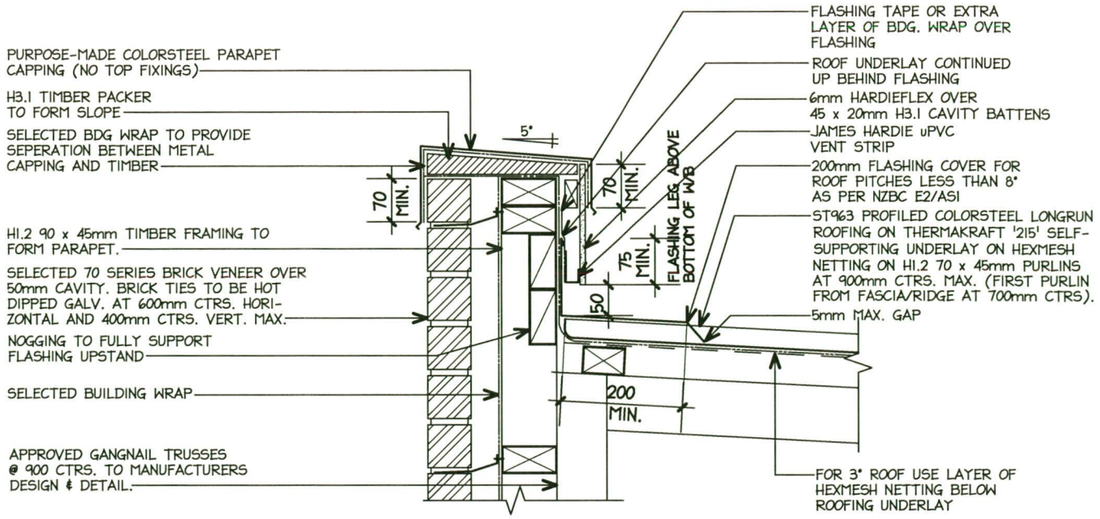

1 / - TYPICAL BRICK VENEER RAKING APRON PARAPET DETAIL

scale 1:10

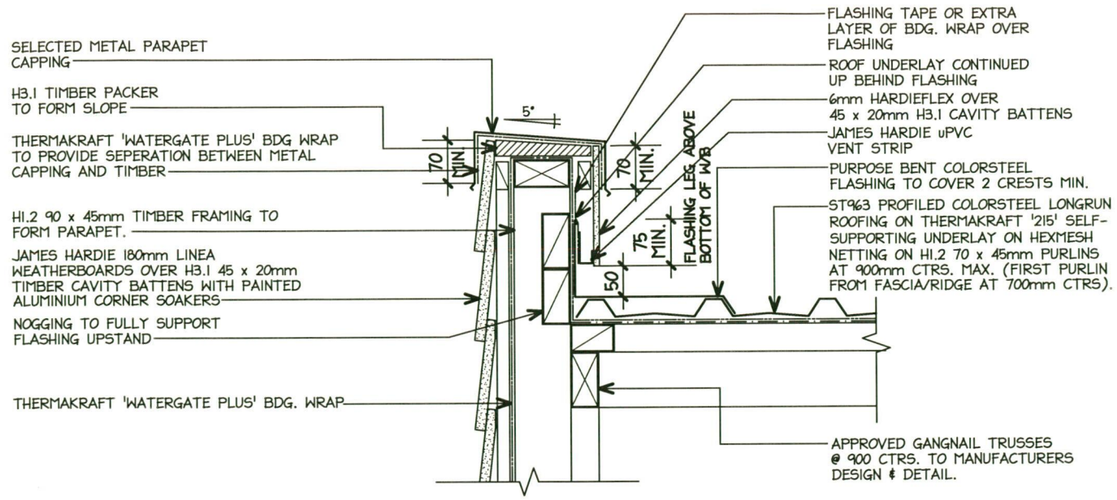

2 / - TYPICAL LINEA WEATHERBOARD PARAPET DETAIL

scale 1:10

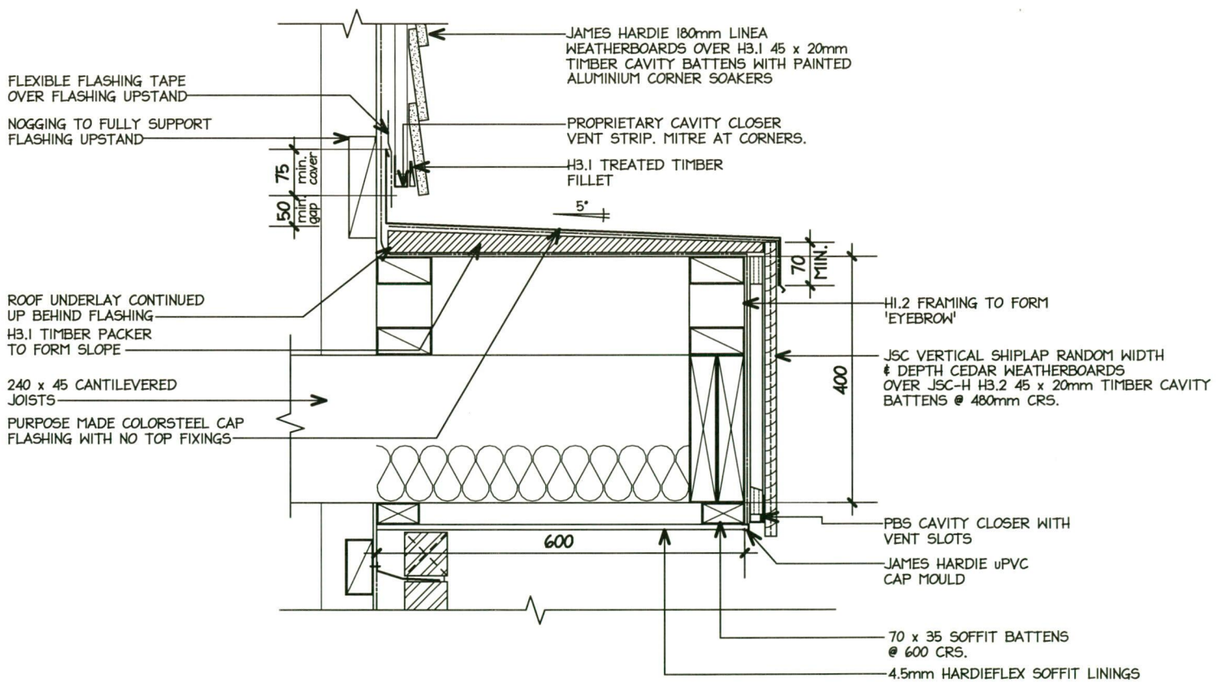

3 / - VERTICAL CEDAR WEATHERBOARD EYEBROW DETAIL

scale 1:10

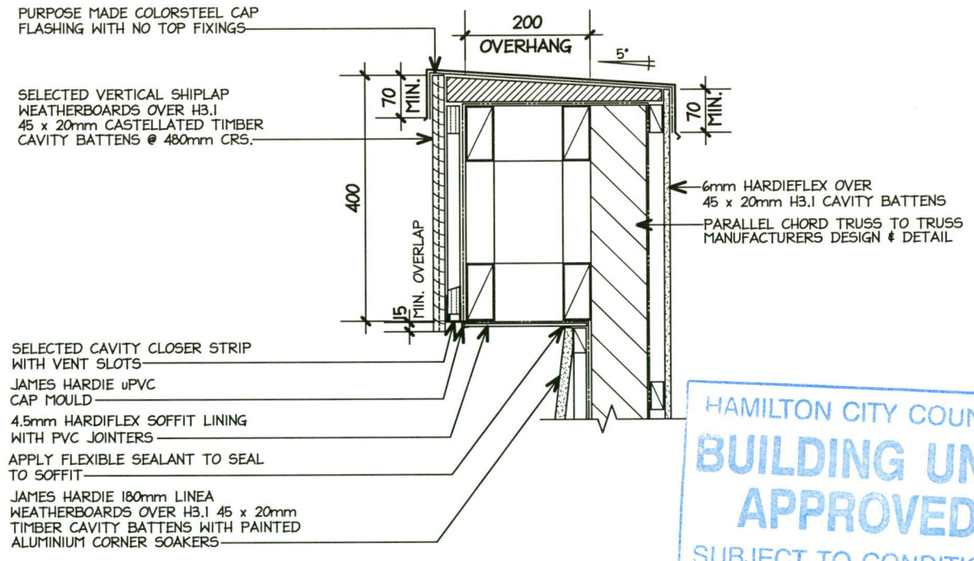

4 / - FRAMED PARAPET EDGE DETAIL

scale 1:10

HAMILTON CITY COUNCIL
BUILDING UNIT
APPROVED
SUBJECT TO CONDITIONS
TO BE KEPT ON SITE

BYRNE+ENRIGHT ARCHITECTURE LTD
PO BOX 28162, ROTOTUNA, HAMILTON.
PH (07) 839 5774, Email:admin@designers.net.nz
LICENSED ARCHITECTURAL DESIGNERS
www.designers.net.nz

LICENSED BUILDING PRACTITIONERS www.dbh.govt.nz BUILDING CONFIDENCE

Issue:	Date:	Description:
WDI	27/07/17	WORKING DRAWINGS FOR BUILDING CONSENT
DD	12/06/17	DEVELOPED DESIGN
DRAFT RC	25/11/16	DRAFT RESOURCE CONSENT APPLICATION

job: PROPOSED HOUSE, UNIT 13 AT 36 BORMAN ROAD, HUNTINGTON, HAMILTON.

sheet: CONSTRUCTION DETAILS 5

date: 08/08/17

COPYRIGHT

scale: 1:10

design: P.E

drawn: P.B

Contractor to check and verify all levels and dimensions on site prior to commencing work. Do not scale off drawings.
All drawings and documentation remain the property of BYRNE & ENRIGHT ARCHITECTURE LTD. No duplication is permitted without prior written consent.
Drawings to be read in conjunction with specification. Tradesmen are required to contact local T.A 24hrs prior to site inspections to inform of liscence number.

job no: 16/1824

sheet no: 5.5 of 33

FIGURE 6.3.C	**COLLAR OR BOOT FLASHINGS** NZ METAL ROOF AND WALL CLADDING CODE OF PRACTICE (SOAKER FLASHINGS TO BE IN ACCORDANCE WITH NZBC E2/AS1 Fig. 55.)

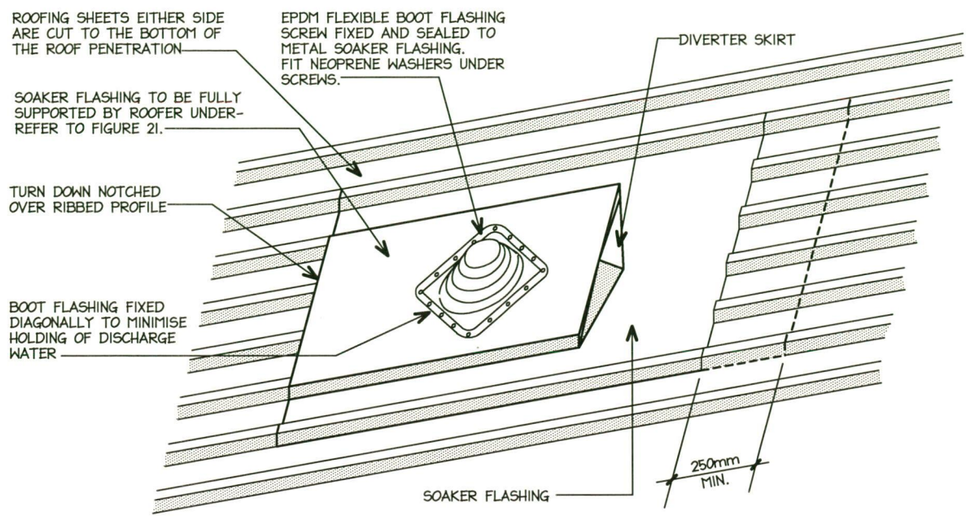

1 / - TYPICAL CIRCULAR DUCT ROOF FLASHING DETAIL (FOR LOW PITCHED ROOFS)

N.T.S

FIGURE 53:	**FLASHING FOR SMALL PIPES** PARAGRAPHS 8.3.10, 8.4.17, 9.6.8.5 AND 9.6.9.6

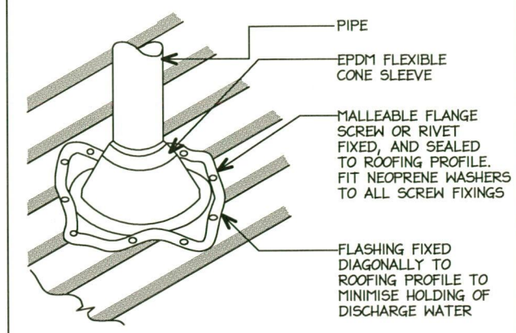

NOTE:
(1) MAX. ROOF PITCH FOR THIS FLASHING 45°, MINIMUM PITCH 10° IF BASE OF FLANGE COVERS ONE OR MORE COMPLETE THROUGHS.
(2) FOR PIPES UP TO 85mm DIAMETER.

2 / - FLASHING FOR SMALL PIPES DETAIL ROOF ABOVE 10°

N.T.S

HAMILTON CITY COUNCIL
BUILDING UNIT
APPROVED
SUBJECT TO CONDITIONS
TO BE KEPT ON SITE

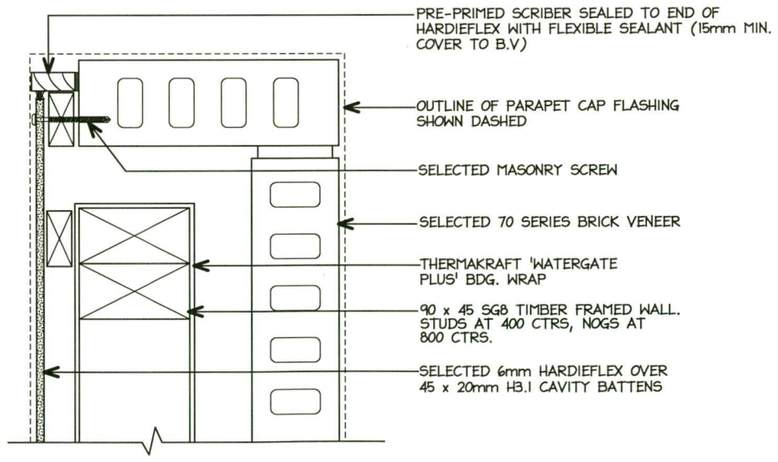

3 / - TYPICAL PARAPET CLADDING JUNCTION DETAIL

scale 1:5

BYRNE+ENRIGHT ARCHITECTURE LTD
PO BOX 28162, ROTOTUNA, HAMILTON.
PH (07) 839 5774, Email:admin@designers.net.nz
LICENSED ARCHITECTURAL DESIGNERS
www.designers.net.nz

Issue:	Date:	Description:
WDI	27/07/17	WORKING DRAWINGS FOR BUILDING CONSENT
DD	12/06/17	DEVELOPED DESIGN
DRAFT RC	25/11/16	DRAFT RESOURCE CONSENT APPLICATION

job: PROPOSED HOUSE, UNIT 13 AT 36 BORMAN ROAD, HUNTINGTON, HAMILTON.

sheet: CONSTRUCTION DETAILS 6

date: 08/08/17

scale: 1:10

design: P.E

drawn: P.B

COPYRIGHT
Contractor to check and verify all levels and dimensions on site prior to commencing work. Do not scale off drawings. All drawings and documentation remain the property of BYRNE & ENRIGHT ARCHITECTURE LTD. No duplication is permitted without prior written consent. Drawings to be read in conjunction with specification. Tradesmen are required to contact local T.A 24hrs prior to site inspections to inform of liscence number.

job no: 16/1824

sheet no: 5.6 of 33

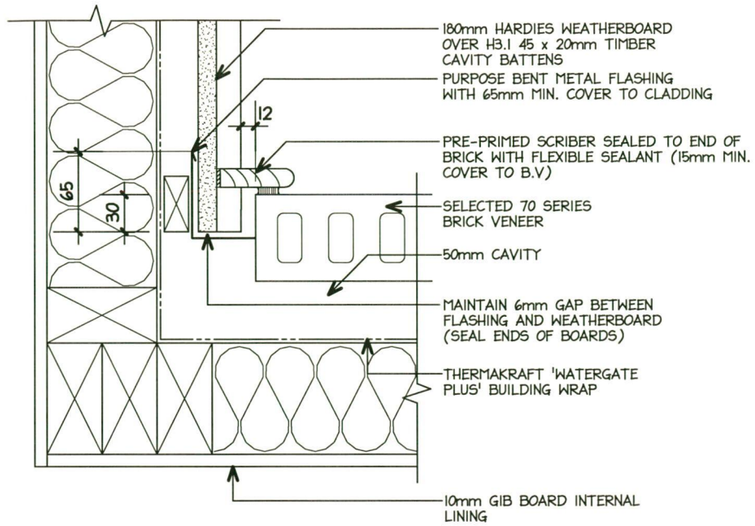

1 / - TYPICAL HARDIES LINEA TO BRICK VENEER INTERNAL CORNER JUNCTION DETAIL

scale 1:5

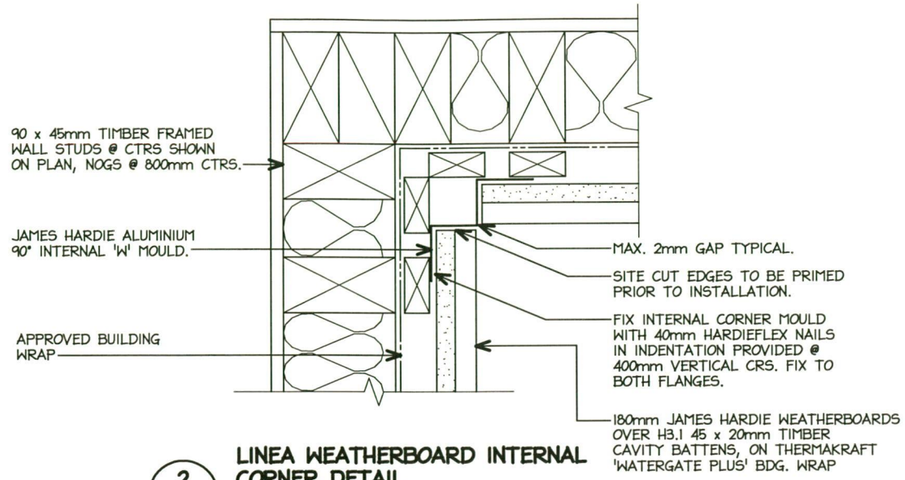

2 / - LINEA WEATHERBOARD INTERNAL CORNER DETAIL

scale 1:5

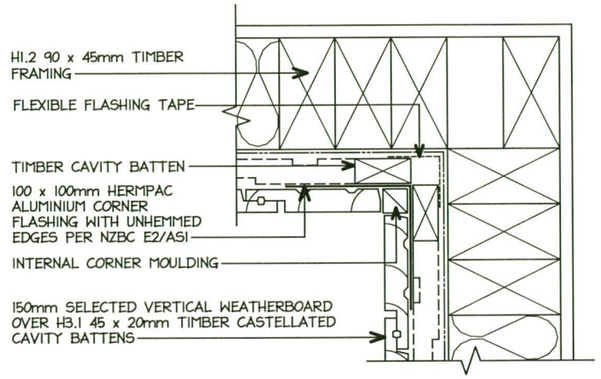

3 / - TYPICAL VERTICAL SHIPLAP W/B INTERNAL CORNER CAVITY DETAIL

scale 1:5

HAMILTON CITY COUNCIL
BUILDING UNIT
APPROVED
SUBJECT TO CONDITIONS
TO BE KEPT ON SITE

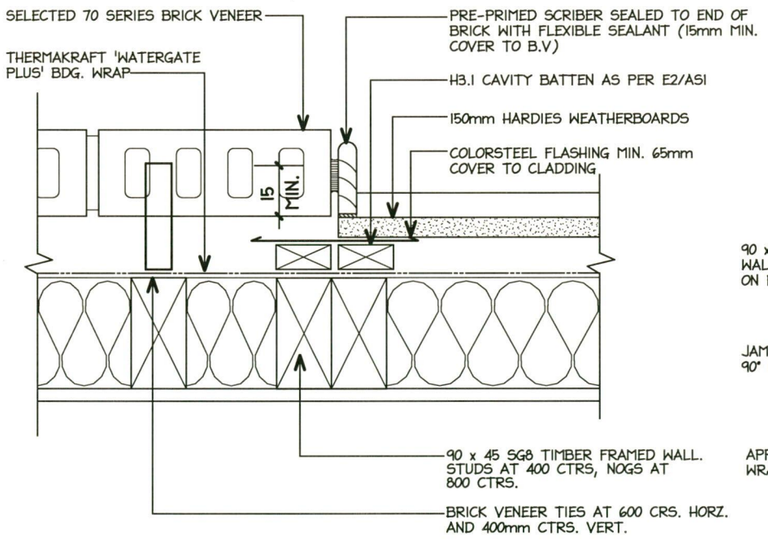

4 / - TYPICAL VERTICAL JUNCTION DETAIL WITH BRICK VENEER AND LINEA W/B

scale 1:5

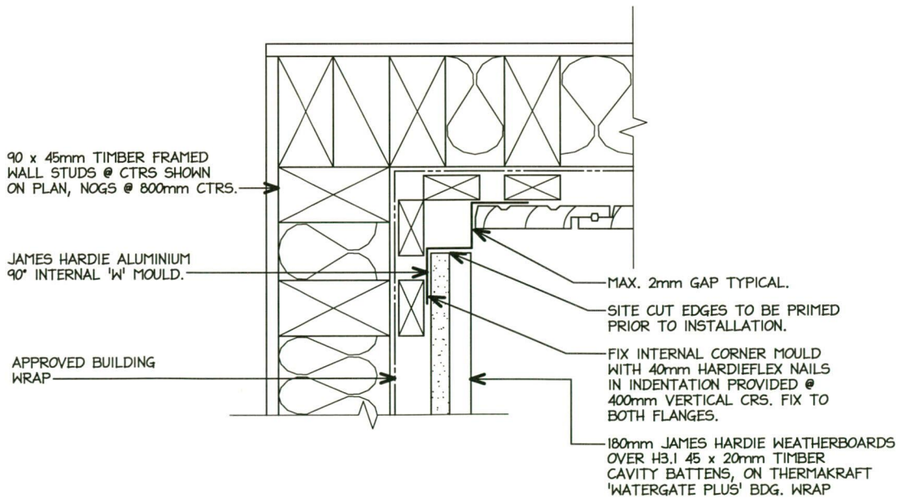

5 / - LINEA WEATHERBOARD TO VERTICAL SHIPLAP W/B INTERNAL CORNER DETAIL

scale 1:5

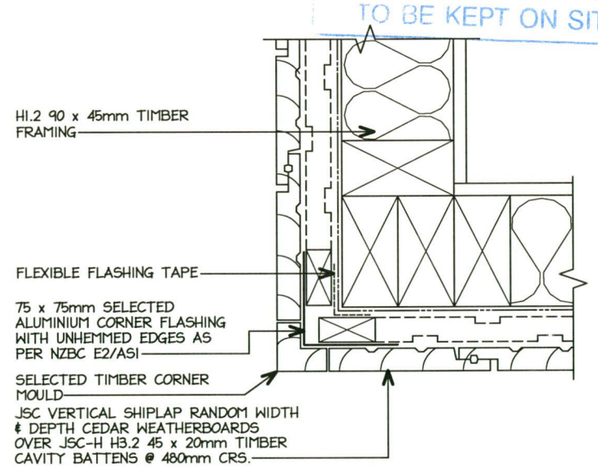

6 / - TYPICAL VERTICAL SHIPLAP W/B EXTERNAL CORNER CAVITY DETAIL

scale 1:5

BYRNE+ENRIGHT ARCHITECTURE LTD
PO BOX 28162, ROTOTUNA, HAMILTON.
PH (07) 839 5774, Email:admin@designers.net.nz
LICENSED ARCHITECTURAL DESIGNERS
www.designers.net.nz

LICENSED BUILDING PRACTITIONERS www.dbh.govt.nz BUILDING CONFIDENCE

Issue:	Date:	Description:
WDI	27/07/17	WORKING DRAWINGS FOR BUILDING CONSENT
DD	12/06/17	DEVELOPED DESIGN
DRAFT RC	25/11/16	DRAFT RESOURCE CONSENT APPLICATION

job: PROPOSED HOUSE, UNIT 13 AT 36 BORMAN ROAD, HUNTINGTON, HAMILTON.

sheet: TYPICAL CLADDING DETAILS

date: 08/08/17

COPYRIGHT

scale: 1:5

design: P.E

drawn: P.B

Contractor to check and verify all levels and dimensions on site prior to commencing work. Do not scale off drawings. All drawings and documentation remain the property of BYRNE & ENRIGHT ARCHITECTURE LTD. No duplication is permitted without prior written consent. Drawings to be read in conjunction with specification. Tradesmen are required to contact local T.A 24hrs prior to site inspections to inform of liscence number.

job no: 16/1824

sheet no: 5.7 of 33

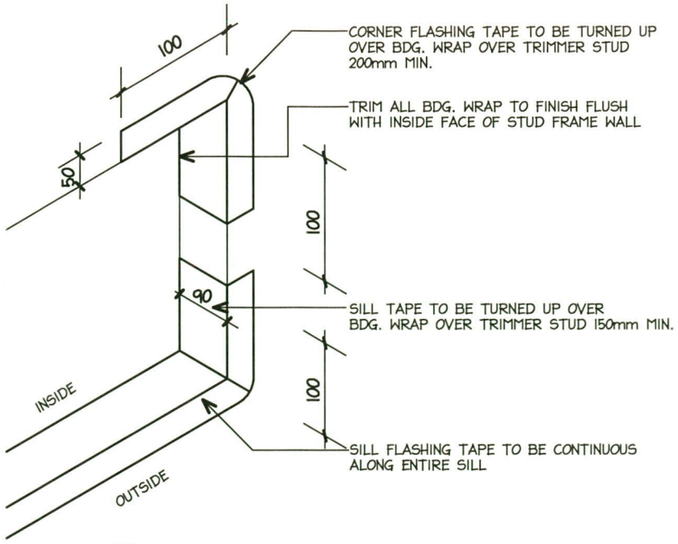

1 - SILL TAPE FLASHING
N.T.S

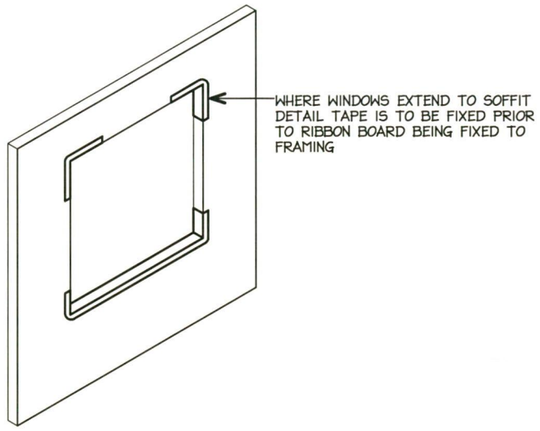

2 - SILL TAPE LOCATION TO WINDOW OPENING
N.T.S

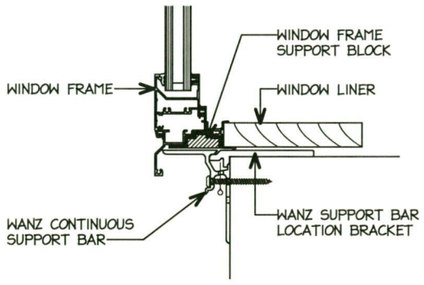

3 - TYPICAL SILL WITH SUPPORT BAR
N.T.S

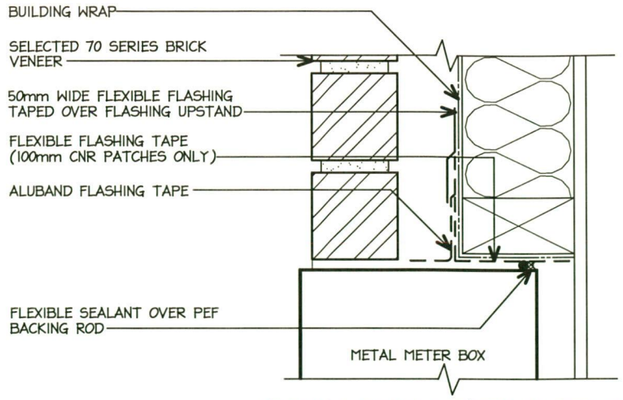

4 - TYPICAL BRICK VENEER METER BOX HEAD DETAIL
scale 1:5

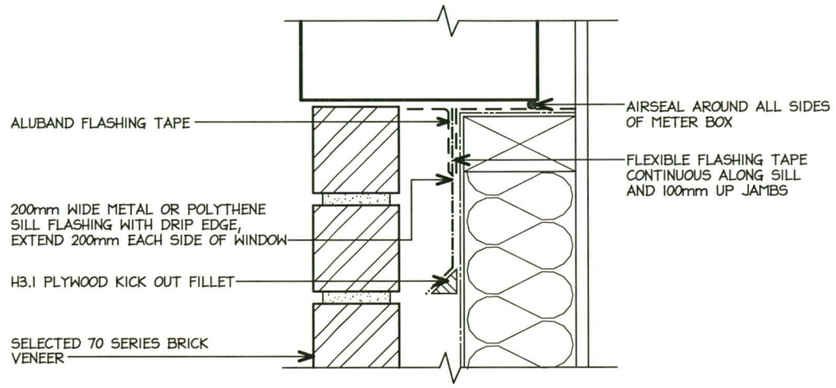

5 - TYPICAL BRICK VENEER METER BOX SILL DETAIL
scale 1:5

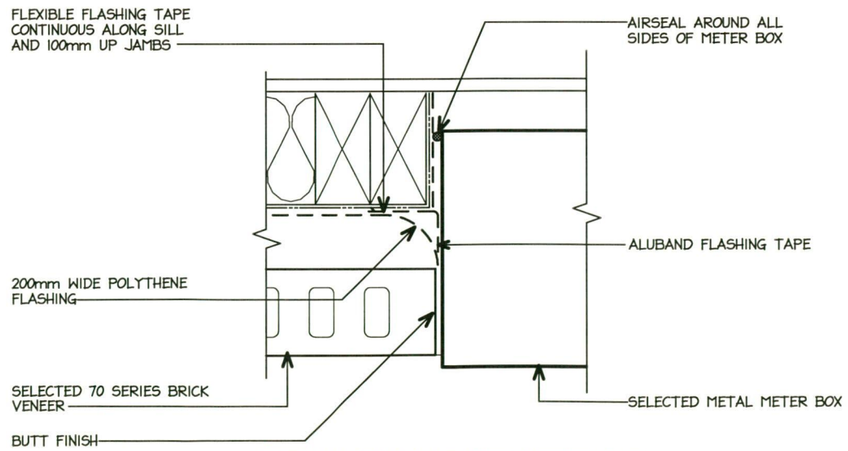

6 - TYPICAL BRICK VENEER METER BOX JAMB DETAIL
scale 1:5

HAMILTON CITY COUNCIL
BUILDING UNIT
APPROVED
SUBJECT TO CONDITIONS
TO BE KEPT ON SITE

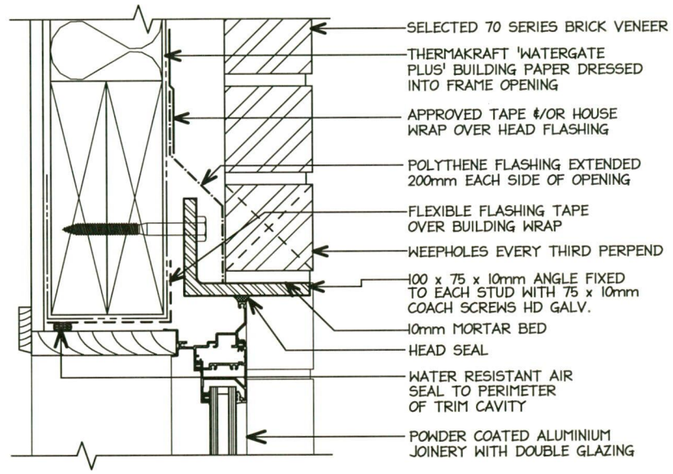

7 - CORNER BRICK VENEER WINDOW HEAD WITH BRICK VENEER ABOVE
scale 1:5

BYRNE+ENRIGHT ARCHITECTURE LTD
PO BOX 28162, ROTOTUNA, HAMILTON.
PH (07) 839 5774, Email:admin@designers.net.nz
LICENSED ARCHITECTURAL DESIGNERS
www.designers.net.nz

Issue:	Date:	Description:
WDI	27/07/17	WORKING DRAWINGS FOR BUILDING CONSENT
DD	12/06/17	DEVELOPED DESIGN
DRAFT RC	25/11/16	DRAFT RESOURCE CONSENT APPLICATION

job: PROPOSED HOUSE, UNIT 13 AT 36 BORMAN ROAD, HUNTINGTON, HAMILTON.

sheet: TYPICAL METERBOX & WINDOW DETAILS

date: 08/08/17

COPYRIGHT

scale: 1:5 & NTS

design: P.E

drawn: P.B

Contractor to check and verify all levels and dimensions on site prior to commencing work. Do not scale off drawings. All drawings and documentation remain the property of BYRNE & ENRIGHT ARCHITECTURE LTD. No duplication is permitted without prior written consent. Drawings to be read in conjunction with specification. Tradesmen are required to contact local T.A 24hrs prior to site inspections to inform of licence number.

job no: 16/1824

sheet no: 5.8 of 33

ALL DETAILS NOT SHOWN ARE TO BE INSTALLED TO MANUFACTURERS INSTRUCTIONS & SHALL COMPLY WITH THE RELEVANT BUILDING CODE

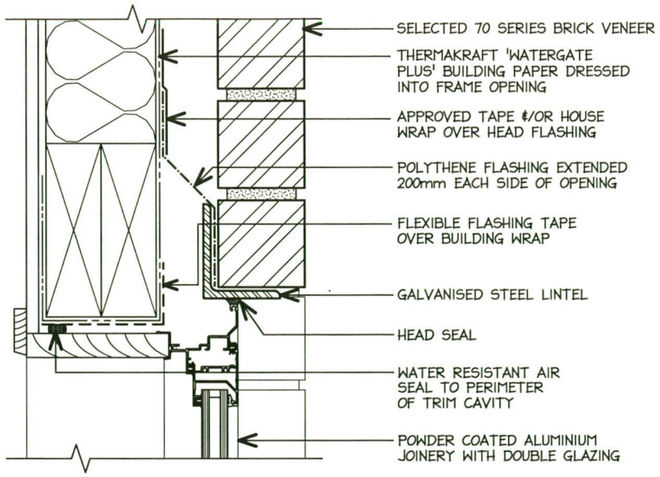

1 TYPICAL BRICK VENEER WINDOW HEAD WITH BRICK VENEER ABOVE

scale 1:5

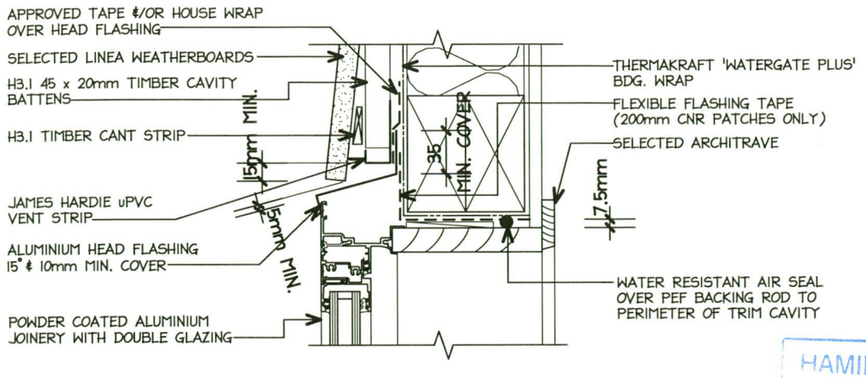

4 TYPICAL LINEA W/B WINDOW HEAD DETAIL

scale 1:5

HAMILTON CITY COUNCIL
BUILDING UNIT
APPROVED
SUBJECT TO CONDITIONS
TO BE KEPT ON SITE

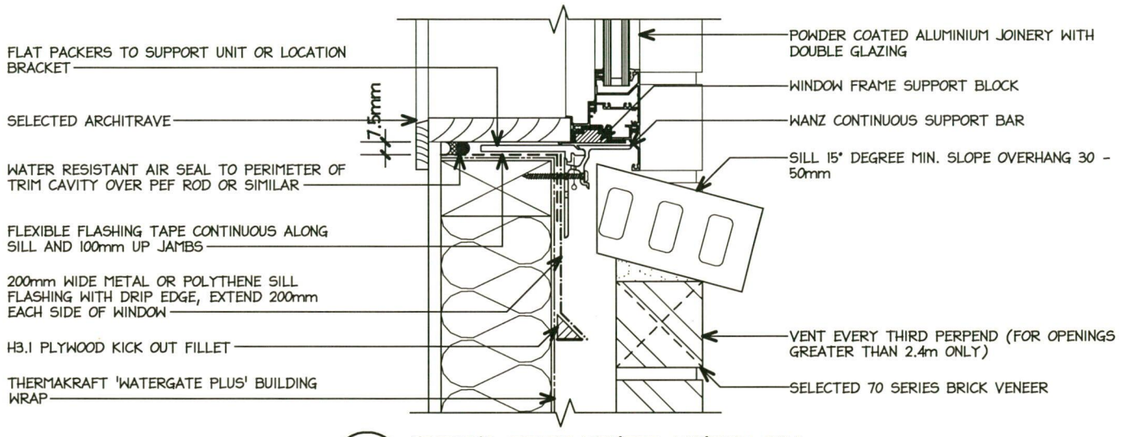

2 TYPICAL BRICK VENEER WINDOW SILL

scale 1:5

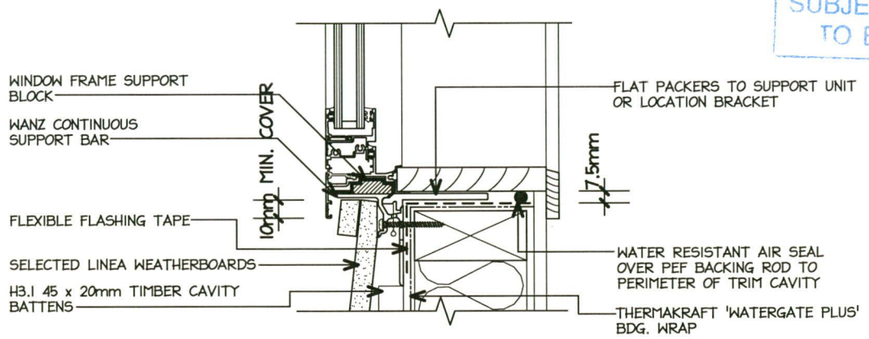

5 TYPICAL LINEA W/B WINDOW SILL DETAIL

scale 1:5

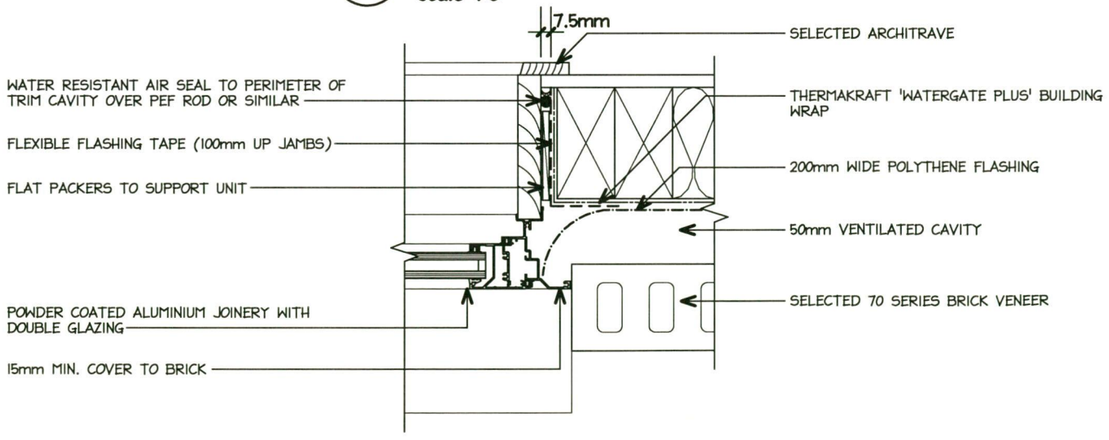

3 TYPICAL BRICK VENEER WINDOW JAMB

scale 1:5

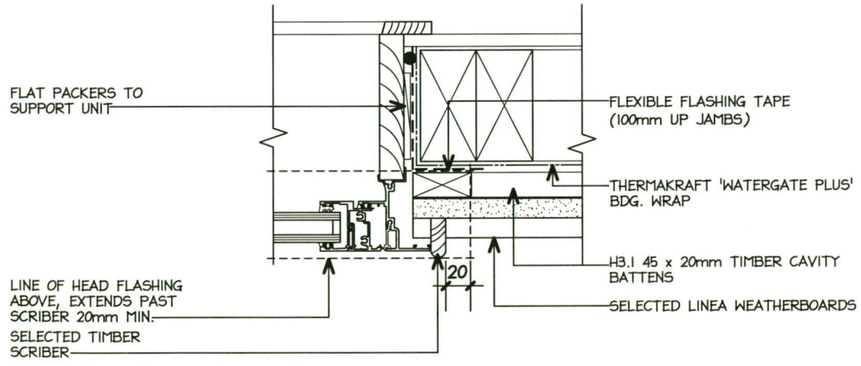

6 TYPICAL LINEA W/B WINDOW JAMB DETAIL

scale 1:5

BYRNE+ENRIGHT ARCHITECTURE LTD
PO BOX 28162, ROTOTUNA, HAMILTON.
PH (07) 839 5774, Email:admin@designers.net.nz
LICENSED ARCHITECTURAL DESIGNERS
www.designers.net.nz

LICENSED BUILDING PRACTITIONERS BUILDING CONFIDENCE www.dbh.govt.nz

Issue:	Date:	Description:
WDI	27/07/17	WORKING DRAWINGS FOR BUILDING CONSENT
DD	12/06/17	DEVELOPED DESIGN
DRAFT RC	25/11/16	DRAFT RESOURCE CONSENT APPLICATION

job: PROPOSED HOUSE, UNIT 13 AT 36 BORMAN ROAD, HUNTINGTON, HAMILTON.

sheet: TYPICAL WINDOW DETAILS

date: 08/08/17

COPYRIGHT

scale: 1:5

design: P.E

drawn: P.B

Contractor to check and verify all levels and dimensions on site prior to commencing work. Do not scale off drawings.
All drawings and documentation remain the property of BYRNE & ENRIGHT ARCHITECTURE LTD. No duplication is permitted without prior written consent.
Drawings to be read in conjunction with specification. Tradesmen are required to contact local T.A 24hrs prior to site inspections to inform of liscence number.

job no: 16/1824

sheet no: 5.9 of 33

NOTE:
WHERE IMPACT NOISE FROM PIPES IS AN ISSUE, FAX ALL PIPES ON RESILIENT BRACKETS.

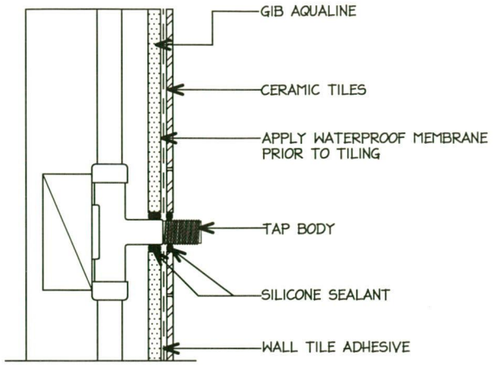

1 - **PIPE PENTRATION DETAIL**
scale 1:5

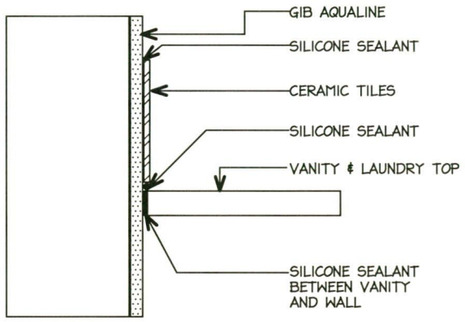

2 - **VANITY & LAUNDRY TOP**
scale 1:5

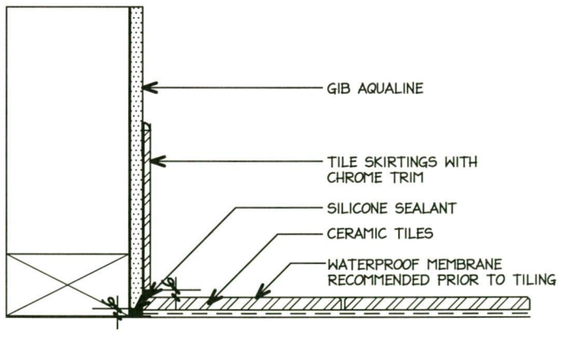

3 - **WALL TO FLOOR JUNCTION**
scale 1:5

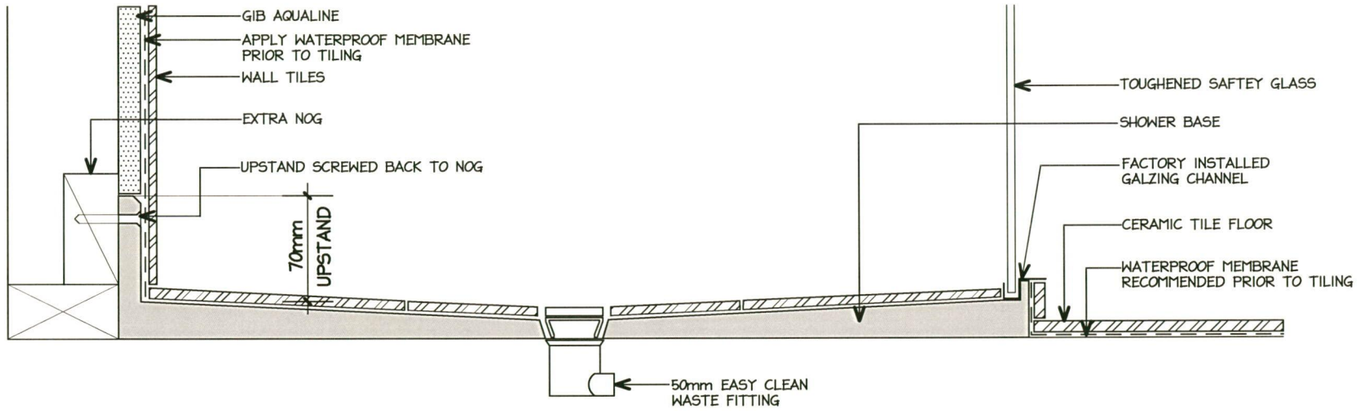

4 - **ATLANTIS 'EASY TILE' SHOWER BASE SYSTEM**
REFER TO MANUFACTURERS SPECIFICATIONS & DETAILS

HAMILTON CITY COUNCIL
BUILDING UNIT
APPROVED
SUBJECT TO CONDITIONS
TO BE KEPT ON SITE

BYRNE+ENRIGHT ARCHITECTURE LTD
PO BOX 28162, ROTOTUNA, HAMILTON.
PH (07) 839 5774, Email:admin@designers.net.nz
LICENSED ARCHITECTURAL DESIGNERS
www.designers.net.nz

LICENSED BUILDING PRACTITIONERS www.dbh.govt.nz BUILDING CONFIDENCE

Issue:	Date:	Description:
WDI	27/07/17	WORKING DRAWINGS FOR BUILDING CONSENT
DD	12/06/17	DEVELOPED DESIGN
DRAFT RC	25/11/16	DRAFT RESOURCE CONSENT APPLICATION

job: PROPOSED HOUSE, UNIT 13 AT 36 BORMAN ROAD, HUNTINGTON, HAMILTON.

sheet: TYPICAL WET AREA DETAILS

date: 08/08/17

COPYRIGHT

scale: 1:5 & NTS

design: P.E

drawn: P.B

Contractor to check and verify all levels and dimensions on site prior to commencing work. Do not scale off drawings.
All drawings and documentation remain the property of BYRNE & ENRIGHT ARCHITECTURE LTD. No duplication is permitted without prior written consent.
Drawings to be read in conjunction with specification. Tradesmen are required to contact local T.A 24hrs prior to site inspections to inform of liscence number.

job no: 16/1824

sheet no: 5.10 of 33

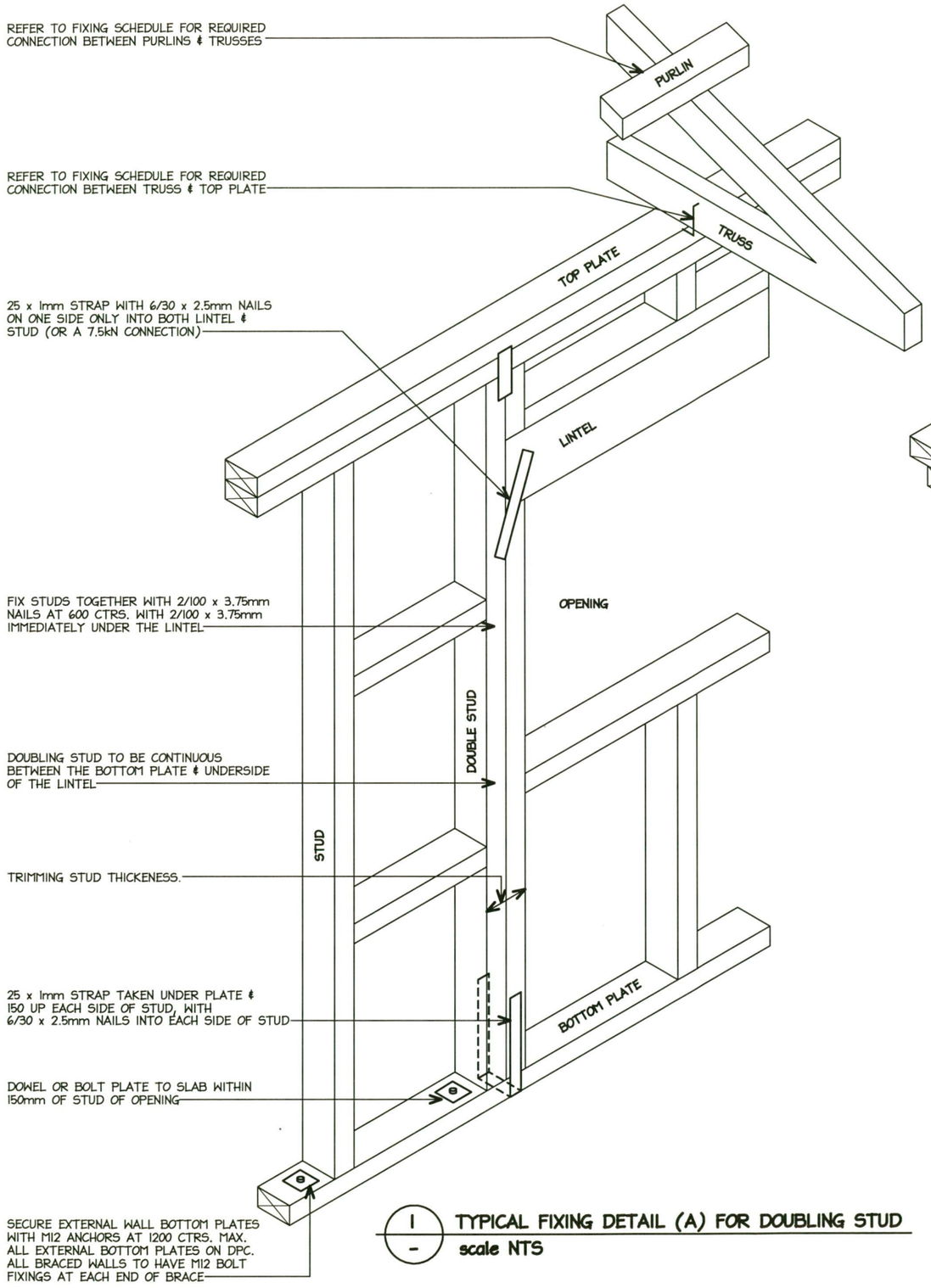

1 - TYPICAL FIXING DETAIL (A) FOR DOUBLING STUD
scale NTS

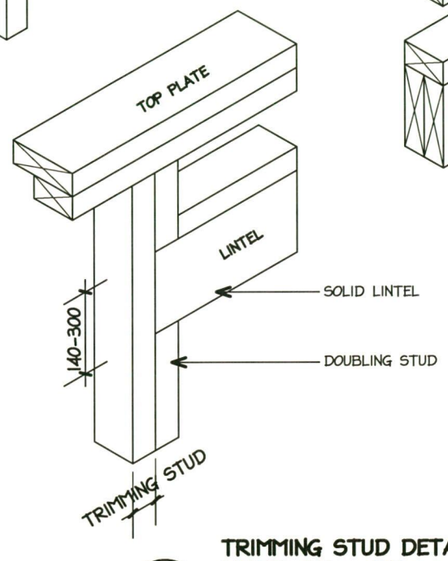

2 - TRIMMING STUD DETAIL FOR LINTEL 150 - 290mm
scale NTS

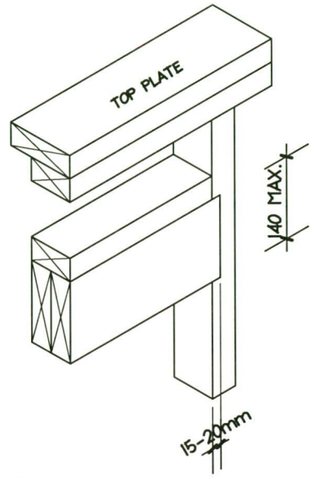

3 - TRIMMING STUD DETAIL FOR LINTEL < 140mm
scale NTS

FIXINGS SCHEDULE

WIND ZONE
MEDIUM

PURLINS TO TRUSSES
70 x 45 PURLINS AT 900mm CTRS. MAX. SPANNING 900mm IN A MEDIUM WIND ZONE:
-2/10g SELF DRILLING SCREW, 80mm LONG

TRUSSES TO TOP PLATES
LIGHT ROOF, TRUSSES AT 900mm CTRS. IN A MEDIUM WIND ZONE. TRUSS LOAD SPAN UP TO 5m:
-2/90 x 3.75 SKEWED NAILS & 2 WIRE DOGS

TOP PLATE TO STUD FIXING
LIGHT ROOF, TRUSSES AT 900mm CTRS. IN A MEDIUM WIND ZONE TRUSS LOAD SPAN UP TO 5m:
-2/90 x 3.75 END NAILS & 2 WIRE DOGS

BOTTOM PLATE TO SLAB
WALL FRAMING BOTTOM PLATES SHALL BE FIXED TO THE SLAB OR FOUNDATION WALL WITH RAMSET ANCHORS AT 1200mm CTRS. MAX. (AND 150mm FROM CORNERS)

FOR EXTERNAL WALLS WHERE THE SLAB EDGE IS FORMED WITH IN-SITU CONCRETE,, ANCHORS SHALL BE SET NOT LESS THAN 90mm INTO THE CONCRETE, MAINTAINING A MIN. EDGE DISTANCE OF 50mm

BOTTOM PLATE TO TIMBER FLOOR
WALL FRAMING BOTTOM PLATES SHALL BE FIXED TO THE TIMBER FLOOR WITH 3/90 x 3.15mm POWER DRIVEN NAILS AT 600mm CTRS.

BRACING
PLEASE NOTE ADDITIONAL BOLT/STRAPS FIXINGS MAY BE REQUIRED BY THE SPECIFIED BRACING. CONFIRM ALL BRACED PANEL FIXINGS WITH THE MANUFACTURERS INSTRUCTIONS

NOTE:
REFER TO TRUSS & FRAME MANUFACTURERS PLANS AS THESE WILL SUPERSEED THIS SCHEDULE

HAMILTON CITY COUNCIL
BUILDING UNIT
APPROVED
SUBJECT TO CONDITIONS
TO BE KEPT ON SITE

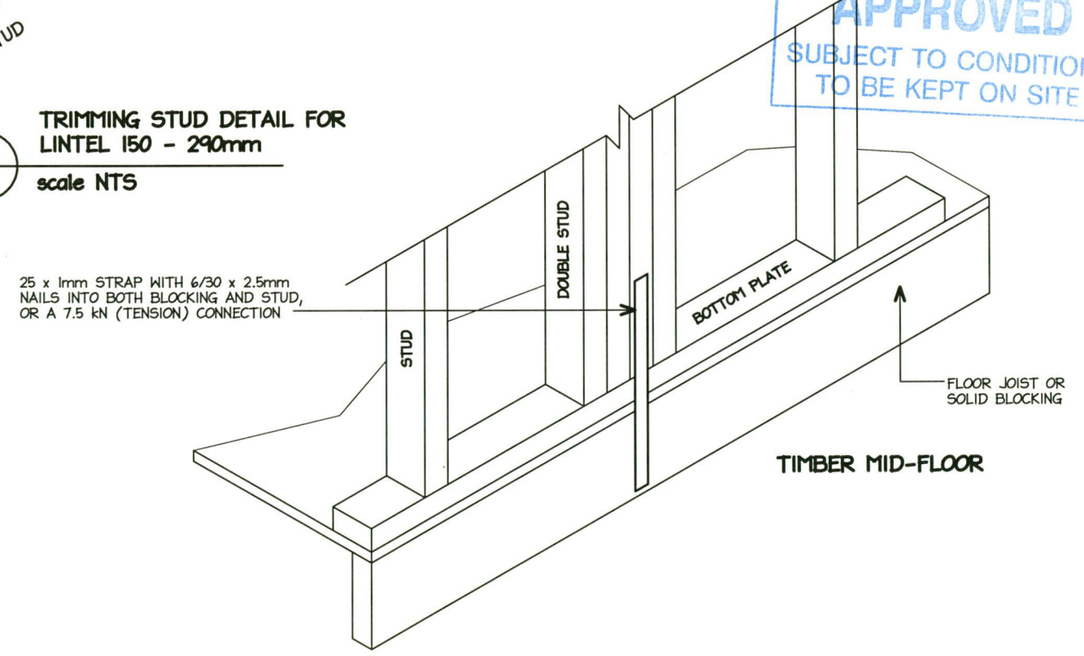

TIMBER MID-FLOOR

4 - TYPICAL TIMBER MIDFLOOR FIXING DETAIL
scale NTS

BYRNE+ENRIGHT ARCHITECTURE LTD
PO BOX 28162, ROTOTUNA, HAMILTON.
PH (07) 839 5774, Email:admin@designers.net.nz
LICENSED ARCHITECTURAL DESIGNERS
www.designers.net.nz

LICENSED BUILDING PRACTITIONER - BUILDING CONFIDENCE - www.dbh.govt.nz

Issue:	Date:	Description:
WDI	27/07/17	WORKING DRAWINGS FOR BUILDING CONSENT
DD	12/06/17	DEVELOPED DESIGN
DRAFT RC	25/11/16	DRAFT RESOURCE CONSENT APPLICATION

job: PROPOSED HOUSE, UNIT 13 AT 36 BORMAN ROAD, HUNTINGTON, HAMILTON.
sheet: TYPICAL FIXING DETAILS 1
date: 08/08/17
scale: NTS
design: P.E
drawn: P.B

COPYRIGHT
Contractor to check and verify all levels and dimensions on site prior to commencing work. Do not scale off drawings. All drawings and documentation remain the property of BYRNE & ENRIGHT ARCHITECTURE LTD. No duplication is permitted without prior written consent. Drawings to be read in conjunction with specification. Tradesmen are required to contact local T.A 24hrs prior to site inspections to inform of liscence number.

job no: 16/1824
sheet no: 5.11 of 33

NOTE:
REFER TO TRUSS & FRAME MANUFACTURERS PLANS AS THESE WILL SUPERSEED THIS SCHEDULE

TYPE E
1.4kN

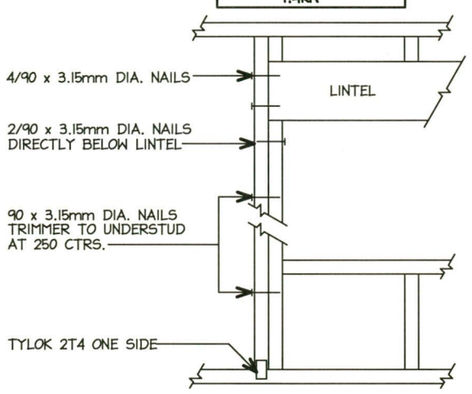

TYPE F
4.0kN

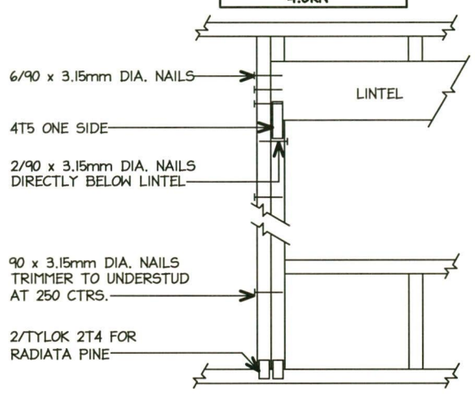

TYPE G
7.5kN

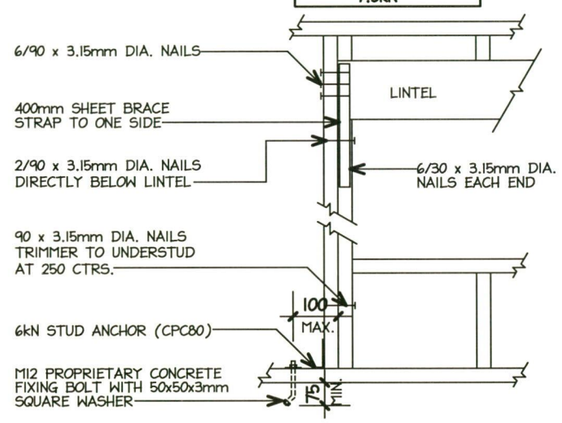

TYPE H
13.5kN

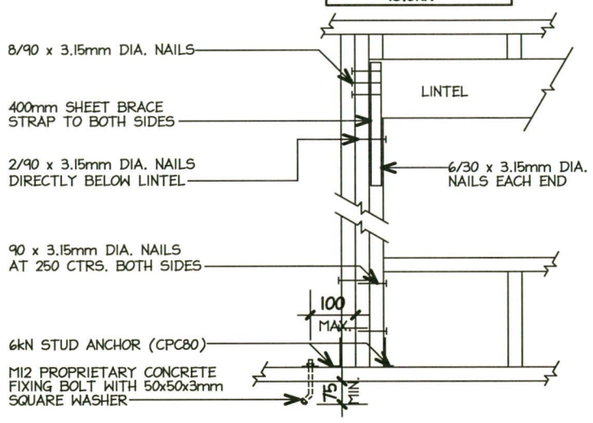

LINTEL FIXING

HAMILTON CITY COUNCIL
BUILDING UNIT
APPROVED
SUBJECT TO CONDITIONS
TO BE KEPT ON SITE

BYRNE + ENRIGHT ARCHITECTURE LTD
PO BOX 28162, ROTOTUNA, HAMILTON.
PH (07) 839 5774, Email:admin@designers.net.nz
LICENSED ARCHITECTURAL DESIGNERS
www.designers.net.nz

LICENSED BUILDING PRACTITIONERS BUILDING CONFIDENCE www.dbh.govt.nz

Issue:	Date:	Description:
WDI	27/07/17	WORKING DRAWINGS FOR BUILDING CONSENT
DD	12/06/17	DEVELOPED DESIGN
DRAFT RC	25/11/16	DRAFT RESOURCE CONSENT APPLICATION

job: PROPOSED HOUSE, UNIT 13 AT 36 BORMAN ROAD, HUNTINGTON, HAMILTON.

sheet: TYPICAL FIXING DETAILS 2

date: 08/08/17

COPYRIGHT

scale: NTS

design: P.E

drawn: P.B

Contractor to check and verify all levels and dimensions on site prior to commencing work. Do not scale off drawings.
All drawings and documentation remain the property of BYRNE & ENRIGHT ARCHITECTURE LTD. No duplication is permitted without prior written consent.
Drawings to be read in conjunction with specification. Tradesmen are required to contact local T.A 24hrs prior to site inspections to inform of licence number.

job no: 16/1824

sheet no: 5.12 of 33

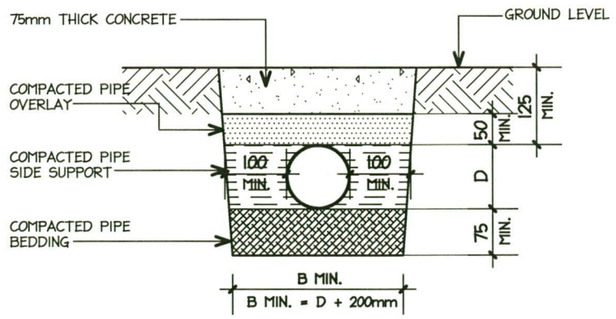

(B) FOR DRAINS WITH COVER BETWEEN 125mm - 500mm

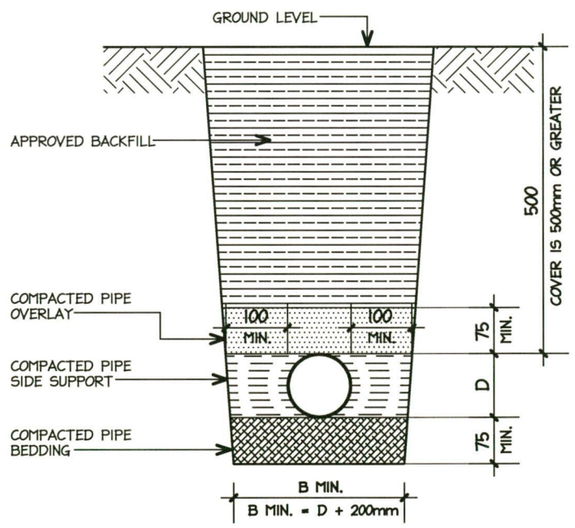

(B) FOR DRAINS WITH COVER OF 500mm OR GREATER

1 - TYPICAL BEDDING OF DRAINS AS/NZS 3500.2:2003

scale NTS

NOTE:
THESE DETAILS ARE BASED ON 'LIGHT VEHICULAR TRAFFIC' REFER TO AS/NZS 3500.2:2003 FOR SITUATIONS OUT SIDE THIS SCOPE AND FOR FURTHER DETAILS.

FIGURE 14: RELATIONSHIP OF PIPE TRENCH TO BUILDING FOUNDATION PARAGRAPH 3.9.7

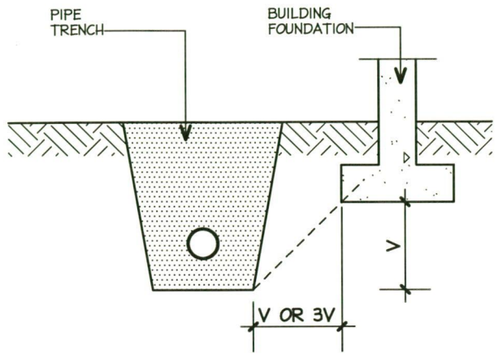

MINIMUM HORIZONTAL SEPERATION SHALL BE V OR 3V DEPENDANT ON LENGTH OF TIME TRENCH OPEN, SEE PARAGRAPH 5.6.1

2 - TYPICAL NZBC PIPE TO FOUNDATION RELATIONSHIP DETAIL

scale NTS

3.9.7 PROXIMITY OF TRENCH TO BUILDING:
FOR LIGHT TIMBER FRAME AND CONCRETE MASONRY BUILDINGS FOUNDED ON GOOD GROUND AND CONSTRUCTED IN ACCORDANCE WITH NZS 3604 OR NZS 4229, PIPE TRENCHES WHICH ARE OPEN FOR NO LONGER THAN 48 HOURS SHALL BE LOCATED NO CLOSER THAN DISTANCE 'V' SEE FIGURE 14) TO THE UNDERSIDE OF ANY BUILDING FOUNDATION.
WHERE THE TRENCH IS TO REMAIN OPEN FOR PERIODS LONGER THAN 48 HOURS, THE MINIMUM HORIZONTAL SEPARATION SHALL INCREASE TO 3V IN ALL GROUND EXCEPT ROCK.

HAMILTON CITY COUNCIL
BUILDING UNIT
APPROVED
SUBJECT TO CONDITIONS
TO BE KEPT ON SITE

TYPICAL DRAINAGE DETAILS

BYRNE+ENRIGHT ARCHITECTURE LTD
Do not scale off drawings
PO BOX 28162, ROTOTUNA, HAMILTON.
PH (07) 839 5774, Email:admin@designers.net.nz
LICENSED ARCHITECTURAL DESIGNERS
www.designers.net.nz

LICENSED BUILDING PRACTITIONERS BUILDING CONFIDENCE www.dbh.govt.nz

Issue:	Date:	Description:
WD1	27/07/17	WORKING DRAWINGS FOR BUILDING CONSENT
DD	12/06/17	DEVELOPED DESIGN
DRAFT RC	25/11/16	DRAFT RESOURCE CONSENT APPLICATION

job: PROPOSED HOUSE, UNIT 13 AT 36 BORMAN ROAD, HUNTINGTON, HAMILTON.
sheet: TYPICAL DRAINAGE DETAILS
date: 08/08/17
scale: NTS
design: P.E
drawn: P.B

COPYRIGHT
Contractor to check and verify all levels and dimensions on site prior to commencing work. Do not scale off drawings. All drawings and documentation remain the property of BYRNE & ENRIGHT ARCHITECTURE LTD. No duplication is permitted without prior written consent. Drawings to be read in conjunction with specification. Tradesmen are required to contact local TA 24hrs prior to site inspections to inform of liscence number.

job no: 16/1824
sheet no: 5.13 of 33