Kaipara District Council
Unit 6 - The Hub, 6 Molesworth Drive, Mangawhai 0505
buildingsupport@kaipara.govt.nz
(09) 439 3123

BC210441

Alpha ID: 210441
Application Type: Building Consent with PIM
Site Address: 53 Robert Hastie Drive Mangawhai
Project Description: New Single Storey 4 Bedroom Dwelling with Attached Double Garage and Swimming Pool
Project Status: Code Compliance Certificate Issued

Creation Date: 10 August 2022

Table of Contents

Lodged Documents

Form 2: Application for Building Consent including PIM 1
PLG 1 Application 6
Record of title - 973221_Title_Search_Copy.pdf 8
Record of title - CN_and_Covenant._12012486_1.pdf 11
Record of title - CN_and_Covenant._12012486_3.pdf 13
Record of title - CN_and_Covenant._8509265_4.pdf 18
Plans - Kendall_-_Lot_81_The_Sanctuary_-_Building_Consent.pdf 27
Restricted building work memorandums Owner-builder declaration - Certificate_of_Design_Works.pdf 65
Supporting documents - Kendall_-_designIT_Calculation.pdf 71
Supporting documents - Kendall_-_H1_Calcs.pdf 78
Supporting documents - Kendall_-_Geotech.pdf 82
Supporting documents - Kendall_BTL.pdf 89
Supporting documents - Kendall_-_On-site_wastewater.pdf 96
Supporting documents - Example_Plan_with_soak_pit_page_2.pdf 133
Supporting documents - Coping_Detail.pdf 134
Supporting documents - Example_Plan_with_soak_pit.pdf 135
Supporting documents - President.pdf 136
Supporting documents - Fibreglass_Pool_Calculations.pdf 137
Supporting documents - Soak_Pit_Detail.pdf 142
Supporting documents - Specification-Residential-Pool-Fencing.pdf 143
Supporting documents - Magnalatch_Install_Instructions.pdf 144
Supporting documents - Truclose_Hinge_Installation.pdf 146
Specifications - Kendall_-_Specification.pdf 148
Specifications - Kendall_-_Manufacturer_Docs.pdf 307
Restricted building work memorandums Owner-builder declaration - Client_Authority_Form.pdf 711

Vetting

Request For Further Information - Vetting 1 712

Development Contributions, RMA, PIM

PIM 714

Processing

Request For Further Information 1 742
Request For Further Information 2 746
Request For Further Information 3 749

Building Consent

Form 5: Building Consent 751

Stamped_Documents_-_BC210441_-_Approved_Application.pdf 786
Stamped_Documents_-_BC210441_-_Approved_Plans.pdf 813
Stamped_Documents_-_BC210441_-_Approved_Supporting_Docs.pdf 859
Stamped_Documents_-_BC210441_-_Approved_Specifications.pdf 1371

Inspections

Inspection Report 1 - Wastepipes 1707
Inspection Report 2 - Prepour 1713
Inspection Report 3 - Floor Slab - Framing Pre-wrap 1721
Inspection Report 4 1723
Inspection Report 5 - Preline 1732
Inspection Report 6 1737
Inspection Report 7 - Siting and Site Scrape Inspection 1743
Inspection Report 8 - Post Line 1746
Inspection Report 9 1750
Inspection Report 10 - Drainage 1754
Inspection Report 11 1756
Inspection Report 12 - Pool Prepour - Final 1758
Inspections Media Album 1771

CCC Documents

Minor variations - Amended_bracing.pdf 1775
Minor variations - Kronospan_OSB_Codemark.pdf 1784
Minor variations - Kronospan_OSB_Warranty.pdf 1789
Minor variations - Kronospan_OSB_Design_Install_Guide.pdf 1793
Minor variations - Kronospan_OSB_Pass.pdf 1811
B1 Ground bearing certificate - 21076_PS4_Lot_81_The_Sanctuary_Mangawhai.pdf 1813
Miscellaneous documents - Lot_81_The_Sanctuary_-_PS3_Form_6A.pdf 1818
Miscellaneous documents - PS3.pdf 1822
G9 Energy works certificate - coc_elec.pdf 1823
Miscellaneous documents - As_Built.pdf 1824
Miscellaneous documents - RoW_and_PS_81_The_Sanctuary.pdf 1825
Miscellaneous documents - lbp_carp.pdf 1827
G13 As-builts drainlayer details pipework test - asbuilt_drainage_.jpg.pdf 1831
E1 Stormwater drain leakage test and as-built plans - asbuilt_pic.jpg.pdf 1832
G13 As-builts drainlayer details pipework test - ps3_drainage.jpg.pdf 1833
Miscellaneous documents - waterproof.jpg.pdf 1834
Miscellaneous documents - 53_Robert_Hastie_Drive_Mangawhai_-_PS3.pdf 1835
Miscellaneous documents - Warner_Wanaka_Pool_PS1.pdf 1836
Miscellaneous documents - 4._Clutha_Fencing_PS1.pdf 1844
B1 Slab - Construction monitoring records - Kendall_P_S_3_2.pdf 1864

B1 Foundations - Construction monitoring records - Lot_81_The_Sanctuary_LBP_Memo.pdf 1865
Miscellaneous documents -
SIGNED_COMPLETE_ARated_Biocycle_Servicing_Maintenance_Contract_DAVE_LINDA_KENDALL_53_ROBERT_ 1865
Scanned_CCC_Documents_-_CCC210441.pdf 1871

1873
Scanned_CCC_Documents_-_Minorvariations-003.pdf 1876
Scanned_CCC_Documents_-_G13As-builtsdrainlayerdetailspipeworktest-001.pdf 1880
Scanned_CCC_Documents_-_Miscellaneousdocuments-001.pdf 1881
Scanned_CCC_Documents_-_B1Foundations-Constructionmonitoringrecords-001.pdf 1885
Scanned_CCC_Documents_-_Minorvariations-005.pdf 1889
Scanned_CCC_Documents_-_Minorvariations-004.pdf 1891
Scanned_CCC_Documents_-_Miscellaneousdocuments-006.pdf 1909
Scanned_CCC_Documents_-_Miscellaneousdocuments-010.pdf 1910
Scanned_CCC_Documents_-_B1Groundbearingcertificate-001.pdf 1912
Scanned_CCC_Documents_-_Miscellaneousdocuments-005.pdf 1917
Scanned_CCC_Documents_-_B1Slab-Constructionmonitoringrecords-001.pdf 1921
Scanned_CCC_Documents_-_Minorvariations-002.pdf 1922
Scanned_CCC_Documents_-_E1Stormwaterdrainleakagetestandas-builtplans-001.pdf 1927
Scanned_CCC_Documents_-_Miscellaneousdocuments-002.pdf 1928
Scanned_CCC_Documents_-_Miscellaneousdocuments-007.pdf 1929
Scanned_CCC_Documents_-_Miscellaneousdocuments-004.pdf 1930
Scanned_CCC_Documents_-_Miscellaneousdocuments-009.pdf 1932
Scanned_CCC_Documents_-_Minorvariations-001.pdf 1952
Scanned_CCC_Documents_-_G13As-builtsdrainlayerdetailspipeworktest-002.pdf 1961
Scanned_CCC_Documents_-_G9Energyworkscertificate-001.pdf 1962
Scanned_CCC_Documents_-_Miscellaneousdocuments-003.pdf 1963
Scanned_CCC_Documents_-_Miscellaneousdocuments-008.pdf 1964

Code Compliance Certificate

Form 6: Application for Code Compliance Certificate 1972
Form 7: Code Compliance Certificate 1975

Emails

Email_210441_Fw_BC210441.1_Request_For_Further_Information_-_Ve_20210630.pdf 1977
Email_210441_Fw_BC210441.1_Request_For_Further_Information_-_Ve_20210703.pdf 1980
Email_210441_Fw_BC210441.1_Request_For_Further_Information_-_RM_20210709.pdf 1984
Email_210441_Re_BC210441_Robert_Hastie_Drive_Mangawhai_20210712.pdf 1987
Email_210441_Re_BC210441_Robert_Hastie_Drive_Mangawhai_20210713.pdf 1991
Email_210441_Fw_BC210441_Robert_Hastie_Drive_Mangawhai_20210720.pdf 1997
Email_210441_FW_BC210441.1_Request_For_Further_Information_-_Ro_20210821.pdf 2000

Email_210441_Re_BC210441_Robert_Hastie_Drive_Mangawhai_20210825.pdf 2005
Email_210441_Re_BC210441.2_Request_For_Further_Information_-_Ro_20210825.pdf 2011
Email_210441_Re_BC210441_Robert_Hastie_Drive_Mangawhai_20210827.pdf 2014
Email_210441_Re_BC210441.3_Request_For_Further_Information_-_Ro_20210827.pdf 2018
Email_210441_RE_BC210441_Robert_Hastie_Drive_Mangawhai_20210831.pdf 2020
Email_210441_BC210441_New_Documents_Uploaded_20211115.pdf 2026
Email_210441_BC210441_New_Documents_Uploaded_20211122.pdf 2027
Email_210441_BC210441_New_Documents_Uploaded_20220519.pdf 2028
Email_210441_Re_BC210441_Inspection_Report_20220803.pdf 2029
Email_210441_RE_BC210441_Form_7_Code_Compliance_Certificate_-_5_20220806.pdf 2031

Sent Emails

Email_210441_BC210441_Robert_Hastie_Drive_Mangawhai_20210630.pdf 2033
Email_210441_BC210441.1_Request_For_Further_Information_-_Vetti_20210630.pdf 2034
Email_210441_RE_Fw_BC210441.1_Request_For_Further_Information_-_20210630.pdf 2036
Email_210441_Application_Accepted_20210701.pdf 2037
Email_210441_RE_Fw_BC210441.1_Request_For_Further_Information_-_20210703.pdf 2038
Email_210441_RE_FW_BC210441.1_Request_For_Further_Information_-_20210705.pdf 2040
Email_210441_BC210441_Robert_Hastie_Drive_Mangawhai_20210705.pdf 2041
Email_210441_BC210441.1_Request_For_Further_Information_-_RMA_-_20210708.pdf 2045
Email_210441_RE_Fw_BC210441.1_Request_For_Further_Information_-_20210709.pdf 2046
Email_210441_Specialist_Input_Requested_-_9_Jul_2021_20210709.pdf 2047
Email_210441_BC210441_A_new_email_has_been_allocated_to_you_20210712.pdf 2053
Email_210441_BC210441_Robert_Hastie_Drive_Mangawhai_20210712.pdf 2054
Email_210441_RE_Re_BC210441_Robert_Hastie_Drive_Mangawhai_20210712.pdf 2057
Email_210441_BC210441_A_new_email_has_been_allocated_to_you_20210713.pdf 2058
Email_210441_BC210441_Robert_Hastie_Drive_Mangawhai_20210713.pdf 2059
Email_210441_RE_Re_BC210441_Robert_Hastie_Drive_Mangawhai_20210713.pdf 2063
Email_210441_BC210441_A_new_email_has_been_allocated_to_you_20210713_002.pdf 2064
Email_210441_BC210441_Robert_Hastie_Drive_Mangawhai_20210713_002.pdf 2065
Email_210441_BC210441_A_new_job_for_you_20210714.pdf 2071
Email_210441_BC210441_A_new_job_for_you_20210714_002.pdf 2072
Email_210441_BC210441.1_PIM_-_Robert_Hastie_Drive_Mangawhai_20210716.pdf 2073
Email_210441_RE_Fw_BC210441_Robert_Hastie_Drive_Mangawhai_20210720.pdf 2075
Email_210441_BC210441_A_new_email_has_been_allocated_to_you_20210721.pdf 2076
Email_210441_BC210441_Robert_Hastie_Drive_Mangawhai_20210721.pdf 2077
Email_210441_BC210441.1_Request_For_Further_Information_-_Rober_20210723.pdf 2080
Email_210441_RE_FW_BC210441.1_Request_For_Further_Information_-_20210821.pdf 2082
Email_210441_BC210441_A_new_email_has_been_allocated_to_you_20210822.pdf 2084
Email_210441_BC210441_Robert_Hastie_Drive_Mangawhai_20210825.pdf 2085

Email_210441_BC210441_Robert_Hastie_Drive_Mangawhai_20210825_002.pdf 2090
Email_210441_BC210441.2_Request_For_Further_Information_-_Rober_20210825.pdf 2091
Email_210441_RE_Re_BC210441_Robert_Hastie_Drive_Mangawhai_20210825.pdf 2092
Email_210441_BC210441_A_new_email_has_been_allocated_to_you_20210825.pdf 2093
Email_210441_RE_Re_BC210441.2_Request_For_Further_Information_-_20210825.pdf 2094
Email_210441_BC210441_A_new_email_has_been_allocated_to_you_20210826.pdf 2095
Email_210441_BC210441_Robert_Hastie_Drive_Mangawhai_20210827.pdf 2096
Email_210441_BC210441_Robert_Hastie_Drive_Mangawhai_20210827_002.pdf 2097
Email_210441_RE_Re_BC210441_Robert_Hastie_Drive_Mangawhai_20210827.pdf 2101
Email_210441_BC210441_Robert_Hastie_Drive_Mangawhai_20210827_003.pdf 2102
Email_210441_BC210441.3_Request_For_Further_Information_-_Rober_20210827.pdf 2107
Email_210441_BC210441_53_Robert_Hastie_Drive_Mangawhai_20210827.pdf 2108
Email_210441_RE_Re_BC210441.3_Request_For_Further_Information_-_20210827.pdf 2109
Email_210441_BC210441_A_new_email_has_been_allocated_to_you_20210828.pdf 2110
Email_210441_BC210441_53_Robert_Hastie_Drive_Mangawhai_20210830.pdf 2111
Email_210441_BC210441_53_Robert_Hastie_Drive_Mangawhai_20210830_002.pdf 2112
Email_210441_BC210441.1_Form_5_Building_Consent_-_53_Robert_Has_20210830.pdf 2113
Email_210441_RE_RE_BC210441_Robert_Hastie_Drive_Mangawhai_20210831.pdf 2114
Email_210441_BC210441_Inspection_Report_20211019.pdf 2115
Email_210441_BC210441_Inspection_Report_20211021.pdf 2116
Email_210441_BC210441_A_new_email_has_been_allocated_to_you_20211116.pdf 2117
Email_210441_BC210441_A_new_email_has_been_allocated_to_you_20211124.pdf 2118
Email_210441_BC210441.3_Inspection_Report_-_53_Robert_Hastie_Dr_20211203.pdf 2119
Email_210441_BC210441_A_new_Document_for_you_20211223.pdf 2120
Email_210441_BC210441_Inspection_Report_20220202.pdf 2121
Email_210441_BC210441_Inspection_Report_20220204.pdf 2122
Email_210441_BC210441_Inspection_Report_20220209.pdf 2123
Email_210441_BC210441_Inspection_Report_20220222.pdf 2124
Email_210441_BC210441_Inspection_Report_20220314.pdf 2125
Email_210441_BC210441_Inspection_Report_20220330.pdf 2126
Email_210441_BC210441_Inspection_Report_20220414.pdf 2127
Email_210441_BC210441_A_new_email_has_been_allocated_to_you_20220518.pdf 2128
Email_210441_Online_Code_Compliance_Certificate_Application_20220519.pdf 2129
Email_210441_BC210441_A_new_email_has_been_allocated_to_you_20220519.pdf 2130
Email_210441_BC210441_Inspection_Report_20220525.pdf 2131
Email_210441_BC210441_A_new_email_has_been_allocated_to_you_20220607.pdf 2132
Email_210441_BC210441_Document_Rejected__Address_53_Robert_Hast_20220609.pdf 2133
Email_210441_BC210441_A_new_email_has_been_allocated_to_you_20220614.pdf 2134
Email_210441_BC210441_Document_Rejected__Address_53_Robert_Hast_20220617.pdf 2135
Email_210441_BC210441_Inspection_Report_20220628.pdf 2136

Email_210441_BC210441_A_new_email_has_been_allocated_to_you_20220629.pdf 2137
Email_210441_BC210441_Document_Rejected__Address_53_Robert_Hast_20220701.pdf 2138
Email_210441_BC210441_A_new_email_has_been_allocated_to_you_20220722.pdf 2139
Email_210441_BC210441_A_new_Document_for_you_20220722.pdf 2140
Email_210441_RE_Re_BC210441_Inspection_Report_20220803.pdf 2141
Email_210441_BC210441_A_new_email_has_been_allocated_to_you_20220804.pdf 2142
Email_210441_BC210441_53_Robert_Hastie_Drive_Mangawhai_20220805.pdf 2143
Email_210441_BC210441_Form_7_Code_Compliance_Certificate_-_53_R_20220805.pdf 2145
Email_210441_RE_RE_BC210441_Form_7_Code_Compliance_Certificate__20220806.pdf 2146

Date Submitted: Monday, 28 June 2021

Form 2
Application for project information memorandum and/or building consent

Section 33 or section 45, Building Act 2004

The building

Street address of building:	Robert Hastie Drive Mangawhai New Zealand mangawhai
Legal description of land where building is located:	Lot 81 Deposited Plan 556753
Building name:	Main Building
Location of building within site/block number:	Robert Hastie Drive Mangawhai New Zealand mangawhai
Number of levels:	No information provided
Level/unit number:	No information provided
Area:	Total: 277.00 m2, Change: 277.00 m2
Current, lawfully established, use:	2.0 Housing: 2.0.2 Detached Dwelling has 4 occupants
Year first constructed:	2021

The owner

Name of owner:	Acdl Trustee Limited
Contact person:	Lance Kendall
Mailing address:	17 Pinefield Road Whenuapai Auckland 0618
Street address/registered office:	No information provided
Phone number:	Landline: 02102210567 Mobile: N/A
Daytime:	Landline: 02102210567 Mobile: N/A
After hours:	Landline: 02102210567 Mobile: N/A
Facsimile number:	No information provided
Email address:	lisa@c3bc.co.nz
Website:	No information provided

The following evidence of ownership is attached to this application:

1. 973221_Title_Search_Copy.pdf (282.71K)
2. CN_and_Covenant._12012486_1.pdf (203.36K)
3. CN_and_Covenant._12012486_3.pdf (368.98K)

4. CN_and_Covenant._8509265_4.pdf (488.98K)

Agent

Name of agent:	Lisa Fletcher			
Mailing address:	14 Fallow Street Queenstown New Zealand Wakatipu Queenstown 9300			
Street address/registered office:	14 Fallow Street Queenstown New Zealand Wakatipu Queenstown			
Phone number:	Landline:	02102210567	Mobile:	02102210567
Daytime:	Landline:	02102210567	Mobile:	02102210567
After hours:	Landline:	02102210567	Mobile:	02102210567
Facsimile number:	No information provided			
Email address:	lisa@c3bc.co.nz			
Website:	No information provided			
Relationship to owner:	Application made on owners behalf			

First point of contact for communications with the council/building consent authority:

Full name:	Lisa Fletcher
Mailing address:	14 Fallow Street, Queenstown, New Zealand Wakatipu Otago Queenstown 9300
Phone number(s):	02102210567
Facsimile number(s):	N/A
Email address(es):	lisa@c3bc.co.nz

Application

I request that you issue a project information memorandum and building consent for the building work described in this application.

Signature of agent on behalf of and with the authority of the owner:

LISA FLETCHER

Date: 28 Jun 2021

space for council use

Application Type	Building Consent including PIM
Reference Key:	44408311CW
Name:	lisa fletcher
Application Role:	Agent

The project

Description of the building work:

Erect a Single Storey, Four Bedroom Residential Dwelling with attached double garage

Will the building work result in a change of use of the building?	No
Intended life of the building if less than 50 years:	50 years
List building consents previously issued for this project (if any):	No information provided
Estimated value of the building work on which the building levy will be calculated (including goods and services tax):	$820,000

Restricted building work

Will the building work include any restricted building work? Yes

If Yes, provide the following details of all licensed building practitioners who will be involved in carrying out or supervising the restricted building work:

Name	Marc Vale
Licensing class	Design
Licensed building practitioner number (or registration number if treated as being licensed under section 291 of Act)	BP134199

Project information memorandum

The following matters are involved in the project:

- ☑ Subdivision
- ☑ Alterations to land contours
- ☑ Disposal of stormwater and wastewater

Building consent

The following plans and specifications are attached to this application:

1. Kendall_-_Lot_81_The_Sanctuary_-_Building_Consent.pdf (6.73M)
2. Kendall_-_Specification.pdf (1.01M)
3. Kendall_-_Manufacturer_Docs.pdf (41.42M)

The building work will comply with the building code as follows:

Main Building	
B1 - Structure	AS1, VM1
B2 - Durability	AS1
C1 - C6 - Protection from Fire (current)	AS1
D1 - Access Routes	AS1
E1 - Surface Water	AS1, VM1
E2 - External Moisture	AS1
E3 - Internal Moisture	AS1
F2 - Hazardous Building Materials	AS1
F4 - Safety from Falling	AS1
F7 - Warning Systems	AS1
G1 - Personal Hygiene	AS1
G2 - Laundering	AS1
G3 - Food Preparation	AS1
G4 - Ventilation	AS1
G7 - Natural Light	AS1
G8 - Artificial Light	AS1
G9 - Electricity	AS1
G10 - Piped Services	AS1
G12 - Water Supplies	AS1
G13 - Foul Water	AS1
H1 - Energy Efficiency	AS1
Waiver / Modification Required:	N/A

Compliance schedule

There are no specified systems in the building.

Attachments

The following documents are attached to this application:

Plans and specifications

1. Kendall_-_Lot_81_The_Sanctuary_-_Building_Consent.pdf (6.73M)
2. Kendall_-_Specification.pdf (1.01M)
3. Kendall_-_Manufacturer_Docs.pdf (41.42M)

Record of title

1. 973221_Title_Search_Copy.pdf (282.71K)
2. CN_and_Covenant._12012486_1.pdf (203.36K)
3. CN_and_Covenant._12012486_3.pdf (368.98K)
4. CN_and_Covenant._8509265_4.pdf (488.98K)

Restricted building work memorandums / Owner-builder declaration

1. Certificate_of_Design_Works.pdf (359.06K)
2. Client_Authority_Form.pdf (237.86K)

Supporting documents

1. Kendall_-_designIT_Calculation.pdf (464.13K)
2. Kendall_-_H1_Calcs.pdf (103.39K)
3. Kendall_-_Geotech.pdf (1.10M)
4. Kendall_BTL.pdf (1.07M)
5. Kendall_-_On-site_wastewater.pdf (7.26M)
6. Example_Plan_with_soak_pit_page_2.pdf (33.59K)
7. Coping_Detail.pdf (287.61K)
8. Example_Plan_with_soak_pit.pdf (46.55K)
9. President.pdf (380.66K)
10. Fibreglass_Pool_Calculations.pdf (1.75M)
11. Soak_Pit_Detail.pdf (28.94K)
12. Specification-Residential-Pool-Fencing.pdf (19.38K)
13. Magnalatch_Install_Instructions.pdf (2.66M)
14. Truclose_Hinge_Installation.pdf (2.36M)

Building Consent Application: 44408311CW

Date Submitted: Monday, 28 June 2021

FORM PLG 1

National Environmental Standard (NES) for Assessing and Managing Contaminants in Soil to Protect Human Health

For assistance in answering these questions please refer to (PLG 1A)

Please note that any inaccuracies may result in the applicant being in breach of the Resource Management Act 1991 and/or exposed to liability if the site is subsequently found to be contaminated, including being liable for remedial works.

Is the building work and all associated activities:

Changing the use of the land? **YES**

(Please note that "changing the use of the land" includes erecting a dwelling on an area of land which previously had no dwelling erected upon it.)

Disturbing soil? **NO**

(more than 25m3 per 500m2 of land) or removing soil? (more than 5m3 per 500m2 of land) (e.g.: foundations, on-site effluent treatment and disposal systems, wells or bores)

Is the land currently being used, has been used in the past, or is likely to have been used for an activity described on the HAIL?

NO

For more information on this process please contact the Duty Planner on 09 439 3123 or go the Ministry for the Environment website: http://www.mfe.govt.nz/laws/standards/contaminants-in-soil/

Signature

The name below as AGENT has the authority for the application to proceed to processing and accept the associated charges.

Signed By:

Lisa Fletcher

28 Jun 2021

The Agent will be the first point of contact for communications with the Council/Building Consent authority regarding this application / building work and will receive all correspondence including all invoices.

RECORD OF TITLE
UNDER LAND TRANSFER ACT 2017
FREEHOLD

Search Copy

R.W. Muir
Registrar-General
of Land

Identifier	**973221**
Land Registration District	**North Auckland**
Date Issued	23 February 2021

Prior References
781590

Estate	Fee Simple
Area	5903 square metres more or less
Legal Description	Lot 81 Deposited Plan 556753

Registered Owners
ACDL Trustee Limited

Estate	Fee Simple - 1/826 share
Area	96.8877 hectares more or less
Legal Description	Lot 100-103, 106, 200, 202 Deposited Plan 404128 and Lot 1 Deposited Plan 430128 and Lot 1 Deposited Plan 482523

Registered Owners
ACDL Trustee Limited

Interests

Subject to a water supply right over part Lot 100 DP 404128 marked B on DP 404128 specified in Easement Certificate 974832.2 - 19.5.1981 at 11.52 am

Appurtenant to the parts Lot 1 DP 482523 and Lot 202 DP 404128 formerly contained in NA133C/596 are rights of way specified in Easement Certificate C414433.4 - 17.9.1992 at 1:36 pm

Appurtenant to the parts Lot 1 DP 482523 and Lot 202 DP 404128 formerly contained in NA133C/596 are rights of way specified in Easement Certificate D549922.4 - 17.10.2000 at 10.22 am

The easements specified in Easement Certificate D549922.4 are subject to Section 351E (1) (a) Municipal Corporations Act 1954

Subject to a right to drain sewage over part Lot 1 DP 430128 marked BJ on DP 430128 created by Easement Instrument 8138731.3 - 20.10.2009 at 9:12 am

Appurtenant to Lot 100 DP 404128 herein is a right of way and appurtenant to Lot 1 DP 430128 herein is a right to convey stormwater created by Easement Instrument 8138731.3 - 20.10.2009 at 9:12 am

The easements created by Easement Instrument 8138731.3 are subject to Section 243 (a) Resource Management Act 1991

Subject to a right (in gross) to convey telecommunications and computer media over part Lot 200 DP 404128 marked BN and over part Lot 202 DP 404128 marked BP all on DP 404128 in favour of Telecom New Zealand Limited created by Easement Instrument 8138731.4 - 20.10.2009 at 9:12 am

The easements created by Easement Instrument 8138731.4 are subject to Section 243 (a) Resource Management Act 1991

Identifier **973221**

Subject to a right (in gross) to convey electricity over part Lot 200 DP 404128 marked BN and over part Lot 202 DP 404128 marked BP all on DP 404128 in favour of Northpower Limited created by Easement Instrument 8138731.6 - 20.10.2009 at 9:12 am

The easements created by Easement Instrument 8138731.6 are subject to Section 243 (a) Resource Management Act 1991

8138731.7 Conservation Covenant pursuant to Section 77 Reserves Act 1977 - 20.10.2009 at 9:12 am

8138731.8 Conservation Covenant pursuant to Section 77 Reserves Act 1977 - 20.10.2009 at 9:12 am

8509265.4 Consent Notice pursuant to Section 221 Resource Management Act 1991 - 6.7.2010 at 3:48 pm (affects Lots 100, 101 &103 DP 404128 and Lots 1 DP 430128 and Lot 81 DP 556753)

Land Covenant in Easement Instrument 8581297.2 - 17.2.2011 at 10:51 am

8581297.3 Encumbrance to The Sanctuary Residents Association Incorporated – 17.2.2011 at 10:51 am (Affects part Lot 1 DP 482523 formerly comprised in CT's 524301, 524302, 524303, 524306, 524308, 524309, 524312, 524315, 524316, 524318, 524328, 524335, 524342, 524343, 524346, 524349, 524351, 524298)

8581297.4 Encumbrance to The Sanctuary Residents Association Incorporated – 17.2.2011 at 10:51 am (Affects Lot 81 DP 556753, Lot 1 DP 430128 and Lot 100-103, 106, 200, 202 DP 404128 and part Lot 1 DP 482523 formerly comprised in CT's 517272, 524294, 524295, 524296, 524297, 524299, 524300, 524304, 524305, 524307, 524310, 524311, 524313, 524314, 524317, 524319, 524320, 524321, 524322, 524323, 524324, 524325, 524326, 524327, 524329, 524330, 524331, 524332, 524333, 524334, 524336, 524337, 524338, 524339, 524340, 524341, 524344, 524345, 524347, 524348, 524350)

Land Covenant in Easement Instrument 9542293.3 - 7.2.2014 at 12:23 pm (affects Lot 1 DP 482523)

12012486.1 Variation of Consent Notice 8509265.4 pursuant to Section 221(5) Resource Management Act 1991 - 23.2.2021 at 12:23 pm

Subject to Section 241(2) Resource Management Act 1991 (affects DP 556753)

12012486.3 Consent Notice pursuant to Section 221 Resource Management Act 1991 - 23.2.2021 at 12:23 pm(Affects Lot 81 DP 556753)

12012486.5 Conservation Covenant pursuant to Section 77 Reserves Act 1977 - 23.2.2021 at 12:23 pm (Affects Lot 81 DP 556753)

Land Covenant (in gross) in favour of The Santuary Residents Association Incorporated created by Covenant Instrument 12028708.1 - 26.3.2021 at 2:55 pm (Affects Lot 81 DP 556753)

Identifier **973221**

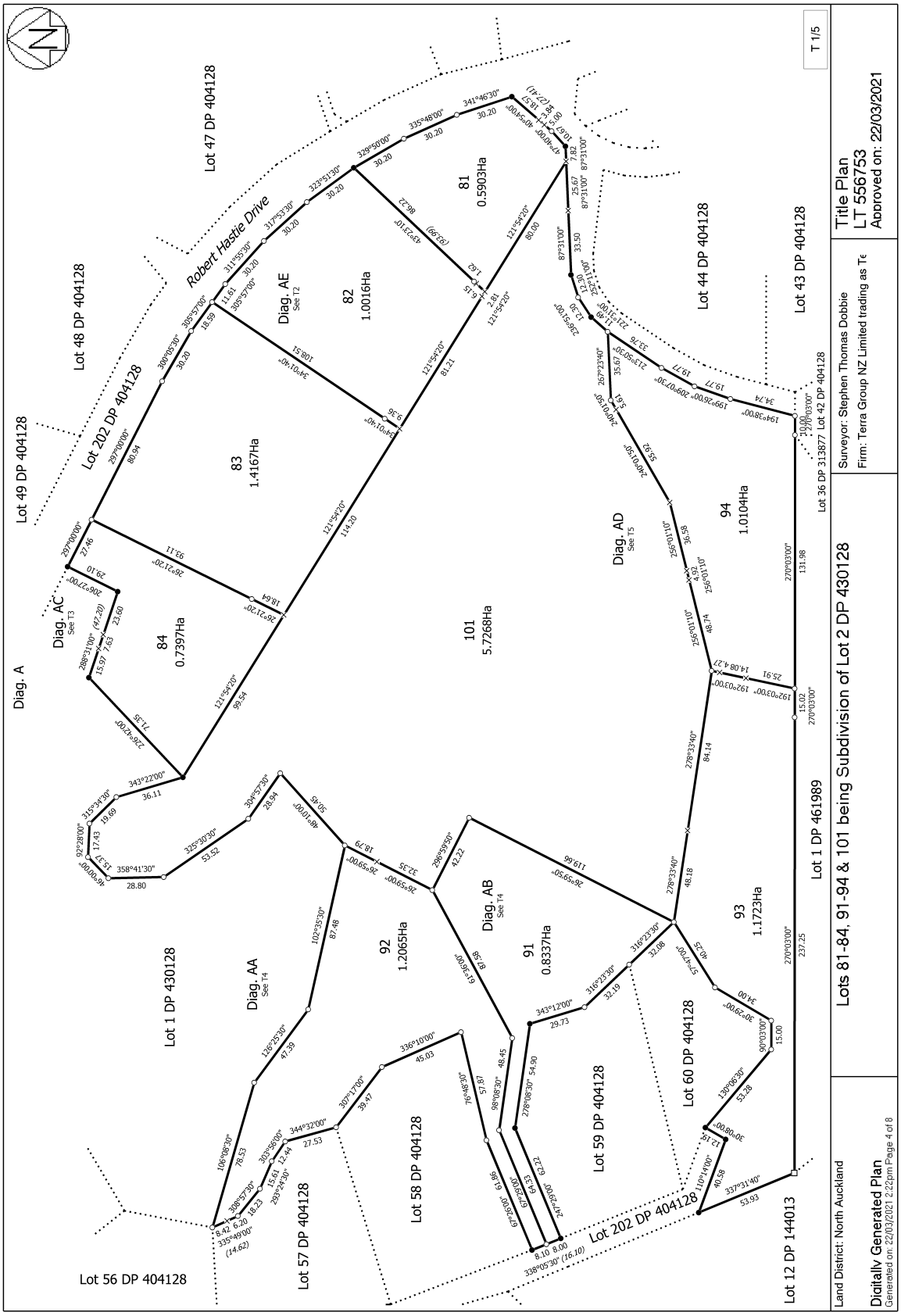

View Instrument Details

Instrument No	12012486.1
Status	Registered
Date & Time Lodged	23 February 2021 12:23
Lodged By	Cameron, Nichole Julienne
Instrument Type	Variation of Consent Notice Condition under s221(5) Resource Management Act 1991

Affected Records of Title	Land District
781590	North Auckland

Affected Instrument Consent Notice under s221(4)(a) Resource Management Act 1991 8509265.4

Annexure Schedule Contains 1 Pages.

Signature

Signed by Christopher Calder Hamilton Allan as Territorial Authority Representative on 22/02/2021 11:56 AM

***** End of Report *****

© Copyright: Land Information New Zealand

VARIATION OF CONSENT NOTICE
PURSUANT TO SECTION 221 (3)
RESOURCE MANAGEMENT ACT 1991

IN THE MATTER of Record of Title No 781590 (North Auckland Land Registration District)

AND

IN THE MATTER of a Consent Notice 8509265.4 (North Auckland Land Registration District)

Pursuant to Section 221(3) of the Resource Management Act 1991 the **KAIPARA DISTRICT COUNCIL** ("the Council") being satisfied that the conditions of subdivision imposed in respect of Lot 2 on Deposited Plan 430128 and 1/59 share Lot 100-103, 106, 200, 202 Deposited Plan 404128 and Lot 1 Deposited Plan 430128 and Lot 1 Deposited Plan 482523 where such conditions of consent were to be complied with on a continuing basis and were secured by way of a consent notice may now be varied by deleting from clause 16 of Consent Notice 8509265.4 referred to Lot 2 on Deposited Plan 430128 and 1/59 share Lot 100-103, 106, 200, 202 Deposited Plan 404128 and Lot 1 Deposited Plan 430128 and Lot 1 Deposited Plan 482523 to the intent that:

Reference to Lot 2 DP 430128 of the Subdivision in clause 16 of Consent Notice 8509265.4 shall be cancelled.

It is hereby agreed between the registered proprietor of the land contained in Record of Title No 781590 and the Council that Consent Notice No. 8509265.4 (North Auckland Lands Registration District) ("the Consent Notice") can be varied and the parties request the District Land Registrar to make an entry in the register and on any relevant instrument of title noting that the Consent Notice has been varied.

In all other respects Consent Notice 8509265.4 remains unaltered

DATED this 4th day of February 2021

SIGNED by
KAIPARA DISTRICT COUNCIL
by its authorised signatory

Dina Tetzner

View Instrument Details

Instrument No	12012486.3
Status	Registered
Date & Time Lodged	23 February 2021 12:23
Lodged By	Cameron, Nichole Julienne
Instrument Type	Consent Notice under s221(4)(a) Resource Management Act 1991

Affected Records of Title	Land District
973221	North Auckland
973222	North Auckland
973223	North Auckland
973224	North Auckland
973225	North Auckland
973226	North Auckland
973227	North Auckland
973228	North Auckland

Annexure Schedule Contains 4 Pages.

Signature

Signed by Christopher Calder Hamilton Allan as Territorial Authority Representative on 22/02/2021 11:57 AM

***** End of Report *****

IN THE MATTER of the Resource Management Act 1991 (**"Act"**)

A N D

IN THE MATTER of the subdivision of land shown in Deposited Plan 556753 (North Auckland Land Registration District) (**"Plan"**)

CONSENT NOTICE
(Section 221 of the Act)

KAIPARA DISTRICT COUNCIL (**"Council"**) being the territorial authority of the district within which the land described in the First Schedule below (**"Land"**) is located has consented to the subdivision of the Land as shown in the Plan, subject to the conditions of the Second Schedule below to be complied with on a continuing basis by the Owner (as defined in the Act).

FIRST SCHEDULE
(Land)

Lot 2 on Deposited Plan 430128 and 1/59 share Lot 100-103, 106, 200, 202 Deposited Plan 404128 and Lot 1 Deposited Plan 430128 and Lot 1 Deposited Plan 482523

SECOND SCHEDULE
(Conditions)

The Owner (as defined in the Act) must, on a continuing basis, to the satisfaction of the Council, comply with the following conditions of the Council's Subdivision Consent RM190258, namely:

1. In respect of Lots 81-84 and Lots 91 to 94 on the Plan (each a "Lot").

   (i) Earthworks, the location of buildings, building foundations and stormwater and wastewater disposal shall be subject to specific engineering design by a suitably qualified Chartered Professional Engineer having regard to any soil instability/saturation issues that may exist or arise as a result of the development. Design shall take into account the recommendations identified in the Engineering Suitability Report prepared by Hawthorn Geddes dated 12 July 2019 and submitted to Council with subdivision consent RM190258.

   (ii) At the time of lodging a building consent for a habitable building on the lots and before issuing a Code of Compliance for that building, a vehicle crossing and driveway must be

constructed which meets the requirements of the Kaipara District Council Engineering Standards 2011.

(iii) At the time of lodging a building consent, a site specific landscape plan prepared by a suitably qualified and experienced Landscape Architect shall be submitted to the Council for approval and be approved. The landscape plan shall refer to Appendix 10 - Building Site Landscape Planting Plan examples within the Assessment of Landscape and Visual Effects prepared by Hawthorn Landscape Architects dated 20 August 2019 and integrate any future buildings within each lot with the landscape, using planting that reflects the character of the surrounding landscape and should include but not be limited to the following:

- A description of the purpose and objectives of the planting.
- A plan of the planted areas detailing proposed plant species, plant sourcing, plant sizes at time of planting, plant locations, density of planting and timing of planting, height and density upon maturity.
- A programme of establishment and post establishment protection and maintenance (e.g. planting method, fertilising, weed removal / spraying, replacement of dead or poorly performing plants, watering, length of maintenance programme). Management of the vegetation within the lot shall be the responsibility of the Lot owner.
- Details of weed management.
- Details of certification process once established

(iv) All works described in the approved site specific landscape plan (above) shall be implemented to the satisfaction of the Council or their delegated representative within the next available planting season following approval of the plan. Evidence shall be prepared by a qualified and experienced landscape architect that the planting required has been implemented to the satisfaction of Council or their delegated representative.

(v) The planting undertaken in accordance with the approved Landscape Plan and the approved site specific landscape plan for this lot created by resource consent RM190258 shall be maintained in perpetuity to the satisfaction of Council or their delegated authority. Should the vegetation be removed or die off, equivalent landscape planting is to be undertaken immediately for the purposes of softening the overall effect of the development and protecting rural character and amenity values in the area.
Note: No plants listed in Section 6 of the Northland Regional Pest and Marine Pathway Management Plan 2017- 2027 are permitted.

(vi) All planting on site shall be maintained in accordance with the approved Ecological Enhancement Plan. Evidence of compliance with this requirement shall be provided to Council in writing by a suitably qualified ecologist five years from the date of issue of titles for RM190258. Maintenance of planting will be monitored by Council for a period of five years from the date of issuing of 224 certificate for RM190258. There will be a Council charge for this monitoring payable by the lot owner.

(vii) Ongoing weed and pest control shall be undertaken in accordance with the approved Ecological Enhancement Plan in perpetuity. Evidence of compliance with this requirement shall be provided to Council in writing by a suitably qualified ecologist five years from the date of issuing of 224 certificate for RM190258.

Weed and pest plant control will be monitored by Council for a period of five years from the date of issuing of 224 certificate for RM190258. There will be a Council charge for this monitoring payable by the lot owner.

(viii) The keeping of mustelids and rodents on the lots is prohibited. Cats shall be limited to no more than two cats for each lot and they shall be required to wear a bell when outside.

No cats or dogs shall be permitted within the conservation covenanted areas and appropriate signs/symbols to this effect shall be erected and maintained at any access points to the conservation covenanted areas.

(ix) Within the lots, dogs shall not be kept on the lot unless the following conditions are complied with:

1. Any dog kept on the lot shall be secured/contained at all times to ensure that they cannot roam into the covenant area on the lot or beyond the boundaries of the lot. Containment shall be demonstrated to the satisfaction of the Council's Team Leader Monitoring and Compliance and may be in the form of an "electronic pet containment fence", secure fenced area or dog run. For the purposes of this condition, "electronic pet containment fence" means a system installed or attached to the perimeter of a defined area (or wireless equivalent) which is designed to prevent dogs escaping by transmitting a digital or electronic signal to a receiver collar worn by the dog.

2. Ongoing compliance with this condition will be monitored by Council. There will be a Council charge for this monitoring payable by the lot owner.

(x) All buildings must be located within the identified building areas shown on the Plan.

Lot	DP	Record of Title	Building Site
81	556753	973221	N
82	556753	973222	O
83	556753	973223	P
84	556753	973224	Q
91	556753	973225	R
92	556753	973226	S
93	556753	973227	T
94	556753	973228	U

(xi) No buildings shall be constructed within the identified areas to be retained as open space within the lots.

(xii) Sufficient firefighting water supply shall be provided for any single residential dwelling on the lot(s) with a minimum volume of 10,000 litres and shall remain accessible and available all year round.

Sufficient firefighting water supply shall be provided for any commercial or industrial land use on the lot(s). Sufficient firefighting water supply is deemed to mean meeting full criteria of the Code of Practice for firefighting water supplies (SNZ PAS 4509:2008 New Zealand Fire Service Firefighting Water Supplies Code of Practice.

(xiii) All buildings shall be sited and constructed, and landscaping provided in accordance with the Sanctuary Building and Landscaping Guidelines.

(xiv) The site specific landscaping plan required above shall be accompanied by evidence of compliance with the Sanctuary Building and Landscaping Guidelines and associated consultation with the Sanctuary Residents Association who administer the guidelines.

(xv) At the time of building consent suitable engineering evidence/design shall be provided to demonstrate that on site stormwater attenuation will be provided to limit peak flows from impervious areas to less than 1.2l/sec/100m^2 impervious area during a 20% Annual Event Probability (AEP) storm event and 1.2l/sec/100m^2 impervious area during a 1% AEP storm event. The evidence/design shall take into account the findings and recommendations of the Stormwater Management Staging Letter prepared by Hawthorn Geddes dated 25 June 2020 and submitted to Council with subdivision consent RM190258.

(xvi) Future lot owners are advised that no physical telecommunication connections are provided and the Kaipara District Council will not be responsible for ensuring nor providing telecommunication connections to the lots.

DATED the 16th day of February 2021

SIGNED by)
KAIPARA DISTRICT COUNCIL)
by its authorised signatory)

Dina Tetzner

View Instrument Details

Instrument No	8509265.4
Status	Registered
Date & Time Lodged	06 July 2010 15:48
Lodged By	Shepherd, Andrea Jane
Instrument Type	Consent Notice under s221(4)(a) Resource Management Act 1991

Affected Computer Registers	Land District
414229	North Auckland
414230	North Auckland
414231	North Auckland
414232	North Auckland
414233	North Auckland
414234	North Auckland
414235	North Auckland
414236	North Auckland
414237	North Auckland
414238	North Auckland
414239	North Auckland
414240	North Auckland
414241	North Auckland
414242	North Auckland
414243	North Auckland
414244	North Auckland
414245	North Auckland
414246	North Auckland
414247	North Auckland
414248	North Auckland
414249	North Auckland
414250	North Auckland
414251	North Auckland
414252	North Auckland
414253	North Auckland
414254	North Auckland
414255	North Auckland
414256	North Auckland
414257	North Auckland
414258	North Auckland
414259	North Auckland
414260	North Auckland
414261	North Auckland
414262	North Auckland
414263	North Auckland
414264	North Auckland
414265	North Auckland
414266	North Auckland
414267	North Auckland
414268	North Auckland
414269	North Auckland

© Copyright: Land Information New Zealand

Affected Computer Registers	Land District
414270	North Auckland
414271	North Auckland
414272	North Auckland
414273	North Auckland
414274	North Auckland
414275	North Auckland
414276	North Auckland
414277	North Auckland
414278	North Auckland
414279	North Auckland
414280	North Auckland
414281	North Auckland
414282	North Auckland
414283	North Auckland
414284	North Auckland
414285	North Auckland
414286	North Auckland
414287	North Auckland

Annexure Schedule: Contains 7 Pages.

Signature

Signed by Nicholas William Dovell Francis as Territorial Authority Representative on 06/07/2010 03:39 PM

***** End of Report *****

KAIPARA DISTRICT COUNCIL

CONSENT NOTICE
PURSUANT TO SECTION 221 OF THE
RESOURCE MANAGEMENT ACT 1991

In the matter of a Consent Notice issued pursuant to Section 221 of the Resource Management Act 1991 (*Act*) in respect of Resource Consents RM090281 and RM090281A (*Resource Consent*) for the subdivision (*Subdivision*) on survey plan DP 404128 showing Lots 1, 4-6, 8-10, 12, 13, 15-17, 19-27, 27a, 28, 28a, 29-33, 35, 35a, 36-60, 69, 70, 100-106, 200 and 202 (all inclusive) and on survey plan DP 430128 showing Lots 1 and 2 DP 430128.

I, Alan John McKerchar, the Principal Administrative Officer of the Kaipara District Council (*Council*), hereby certify that pursuant to the consents under RM090281 dated 18 April 2006 and RM090281A dated 18 November 2009, the following shall apply as conditions of such consents to be complied with on a continuing basis by the Owner as defined in the Act:

In relation to Lots 1, 4-6 (inclusive), 8, 9, 12, 13, 27A, 28, 28A, 29-33 (inclusive), 35, 35A, 36-38 (inclusive) on DP 404128 of the Subdivision

1 The Owner of each lot is required to be a shareholder or member of The Sanctuary Residents Association Incorporated formed to operate, maintain and administer those components of the communal wastewater treatment and disposal system for the Subdivision located on commonly owned land and administer monitoring of individual treatment systems connected to the communal system.

2 The Owner of each lot is required to enter into an ongoing contract for the maintenance of the individual treatment systems with an organisation approved by The Sanctuary Residents Association Incorporated .

3 In the event that The Sanctuary Residents Association Incorporated is wound up or liquidated, or ceases or fails to carry out its prescribed purposes, the Owners are deemed to be an unincorporated society for the purposes set out in paragraphs 1 and 2 of this Consent Notice.

In relation to Lots 10, 17, 19-23 (inclusive), 27, 39-60 (inclusive), 69 and 70 on DP 404128 and Lot 2 on DP 430128 of the Subdivision

4 The Owner acknowledges that the construction and use of on site wastewater disposal systems for each lot may require discharge permits from the Northland Regional Council and that advice on specific resource

consent requirements (if any) should be sought from the Northland Regional Council accordingly.

5 The Owner shall ensure that the wastewater treatment and disposal systems on each lot shall be designed by and installed under the supervision of a competent engineer with appropriate experience in wastewater systems or other suitable qualified person to the approval of the Council; and.

6 The Owners of each lot shall enter into an ongoing contract for the maintenance of the wastewater treatment and disposal systems on each lot and provide details to the entity formed to administer all matters associated with the maintenance of all on-site effluent disposal systems.

In relation to lots 1, 4-6 (inclusive), 8-10 (inclusive), 12, 13, 15-17 (inclusive), 19-27 (inclusive), 27a, 28, 28a, 29-33 (inclusive), 35, 35a, 36-60 (inclusive), 69 and 70 on DP 404128 and Lot 2 on DP 430128 of the Subdivision

7 The Owner shall have regard to the Engineering and Geotechnical Report (Job No. 4819) prepared by Hawthorne Geddes Engineers & Architects Ltd dated September 2004 (*the Hawthorne Geddes Report*).

8 The Owner of each Lot shall ensure that it complies with the recommendations of that report with respect to foundations and drainage at the time of development of the Lot.

9 The Owner of each Lot shall not erect or permit the erection of any building otherwise than within the identified building sites and additional building sites referred to in the Hawthorne Geddes Report, such sites being identified in respect of each lot on the table annexed to this consent notice as Schedule One.

10 The Owner shall comply with the building and landscaping guidelines for the Subdivision which have been approved by Council and shall ensure that any buildings on the lot be sited and constructed and the lots landscaped in accordance with those building and landscaping guidelines.

11 The Owner shall maintain any landscaping on the lot in accordance with the Landscape Amenity Enhancement Plan approved under Condition 2(bb) of Resource Consent. The areas of the landscaping on the lots to which this condition 9 apply are as set out in the table annexed to this consent notice as Schedule Two.

12 The Owner acknowledges that condition 10 above will be monitored by the Council for a period of five years from the date of completion of planting to

the reasonably satisfaction of Council, and that there will be a Council charge for this monitoring payable by the Owner.

13 The Owner shall not allow the planting of exotic vegetation that could pose a threat to the ecological values of the lots. This includes the introduction of invasive plant species, including those currently listed on the nationally banned for sale list (see N.R.C Regional Pest Management Strategy).

14 The Owner of each Lot acknowledges that it is required to be a member of The Sanctuary Residents Association Incorporated for so long as it is the owner of a Lot. The Owner of each Lot acknowledges that it shall not take steps to wind up or liquidate The Sanctuary Residents Association Incorporated without the Council's prior written consent.

In relation to lots 52 and 70 on DP 404128 of the Subdivision

15 The Owner acknowledges the presence of recorded archaeological sites in the Time Depth Heritage Consultants Archaeological Assessment Report and the protection given to these sites under the Historic Places Act 1993.

In relation to lots 1, 4-6 (inclusive), 8-10 (inclusive), 12, 13, 15-17 (inclusive), 19-27 (inclusive), 27a, 28, 28a, 29-33 (inclusive), 35, 35a, 36-60 (inclusive), 69 and 70 on DP 404128 and Lot 2 on DP 430128 of the Subdivision

16 The Owner of each Lot acknowledges that no further subdivision of the lot shall be permitted for a period of 10 years from the date of registration of this consent notice.

In relation to lots 1, 10, 13 and 15-17 (inclusive) on DP 404128 of the Subdivision

17 The Owner of each Lot must not use and must not permit the use of direct vehicular access from the Lot onto Cove Road.

In relation to Lots 100 and 101 on DP 404128 of the Subdivision

18 The Owner must take all practicable steps to protect and enhance the amenity, ecological and water quality values of the lakes on the Lots and must not use or permit the use of motorised craft on the lakes except by the Owner for dam maintenance or emergency purposes.

In relation to Lot 103 on DP 404128 of the Subdivision

19 The Owner must not use and must not permit the use of the Lot for any purpose other than recreation and recreation facilities and must not use or

permit the use of the Lot for residential development or commercial accommodation.

In relation to Lot 1 DP 430128 of the Subdivision

20 The Owner must not use or permit the use of the Lot for any purpose other than maintaining and enhancing its agricultural use and for effluent disposal and must not use or permit the use of the Lot for residential development or commercial accommodation.

Dated this day 16th of June 2010

AUTHENTICATED by the Chief Executive of the Council, Alan John McKerchar

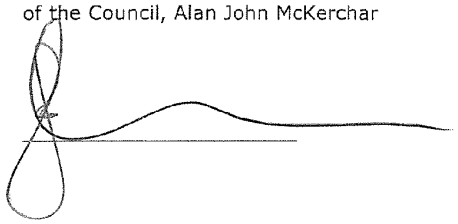

SCHEDULE ONE

Building sites and additional building sites

Lot	Building sites as shown on DP 404128	Additional building sites shown on DP 404128
Lot 1 on DP 404128	ZZ	
Lot 4 on DP 404128	ZY	
Lot 5 on DP 404128	ZX	
Lot 6 on DP 404128	ZW	
Lot 8 on DP 404128	ZV	
Lot 9 on DP 404128	ZU	
Lot 10 on DP 404128	ZT	
Lot 12 on DP 404128	ZS	
Lot 13 on DP 404128	ZQ	
Lot 15 on DP 404128	ZP	
Lot 16 on DP 404128	ZO	
Lot 17 on DP 404128	ZN	XP
Lot 19 on DP 404128	ZL	XE and XF
Lot 20 on DP 404128	ZM	XO
Lot 21 on DP 404128	ZK	
Lot 22 on DP 404128	ZJ	
Lot 23 on DP 404128	ZI	
Lot 24 on DP 404128	ZH	
Lot 25 on DP 404128	ZG	
Lot 26 on DP 404128	ZF	
Lot 27 on DP 404128	XR	
Lot 27a on DP 404128	ZD and ZE	
Lot 28 on DP 404128	ZC	
Lot 28a on DP 404128	ZB	
Lot 29 on DP 404128	ZA	
Lot 30 on DP 404128	YZ	
Lot 31 on DP 404128	YY	
Lot 32 on DP 404128	YX	
Lot 33 on DP 404128	YW	
Lot 35 on DP 404128	YV	
Lot 35a on DP 404128	YU	XN
Lot 36 on DP 404128	YT	XM
Lot 37 on DP 404128	YS	XL
Lot 38 on DP 404128	YR	XG and XK
Lot 39 on DP 404128	YQ	
Lot 40 on DP 404128	YP	XJ
Lot 41 on DP 404128	YO	XI
Lot 42 on DP 404128	YN	XH
Lot 43 on DP 404128	YM	
Lot 44 on DP 404128	YL	XD
Lot 45 on DP 404128	YJ	
Lot 46 on DP 404128	YI	
Lot 47 on DP 404128	YH	
Lot 48 on DP 404128	YG	

Lot	Building sites as shown on DP 404128	Additional building sites shown on DP 404128
Lot 49 on DP 404128	YF	
Lot 50 on DP 404128	YE	
Lot 51 on DP 404128	YD	
Lot 52 on DP 404128	YC	
Lot 53 on DP 404128	YB	
Lot 54 on DP 404128	YA	
Lot 55 on DP 404128	XZ	
Lot 56 on DP 404128	XY	
Lot 57 on DP 404128	XX	
Lot 58 on DP 404128	XW	
Lot 59 on DP 404128	XV	
Lot 60 on DP 404128	XU	
Lot 69 on DP 404128	XT	
Lot 70 on DP 404128	XQ and XS	
Lot 2 on DP 404128	YK	ZR

SCHEDULE TWO

Landscape enhancement areas

Lot	Landscape enhancement areas as shown on DP 404128
Lot 1 on DP 404128	C, D, P, CA, CE and CH
Lot 4 on DP 404128	E and CC
Lot 5 on DP 404128	F and CJ
Lot 6 on DP 404128	G
Lot 8 on DP 404128	H
Lot 9 on DP 404128	I
Lot 10 on DP 404128	J
Lot 12 on DP 404128	K
Lot 13 on DP 404128	L, N and O
Lot 17 on DP 404128	CT
Lot 19 on DP 404128	Y, Z, AG and AO
Lot 24 on DP 404128	CW
Lot 25 on DP 404128	AH
Lot 27 on DP 404128	AK
Lot 27a on DP 404128	AM
Lot 29 on DP 404128	AP
Lot 30 on DP 404128	AQ
Lot 31 on DP 404128	AR
Lot 32 on DP 404128	AS
Lot 33 on DP 404128	S and CU
Lot 35a on DP 404128	AU
Lot 36 on DP 404128	AV
Lot 37 on DP 404128	AW
Lot 38 on DP 404128	AX
Lot 102 on DP 404128	BQ
Lot 103 on DP 404128	BD
Lot 106 on DP 404128	BO
Lot 1 on DP 430128	BR
Lot 2 on DP 430128	BK and BL

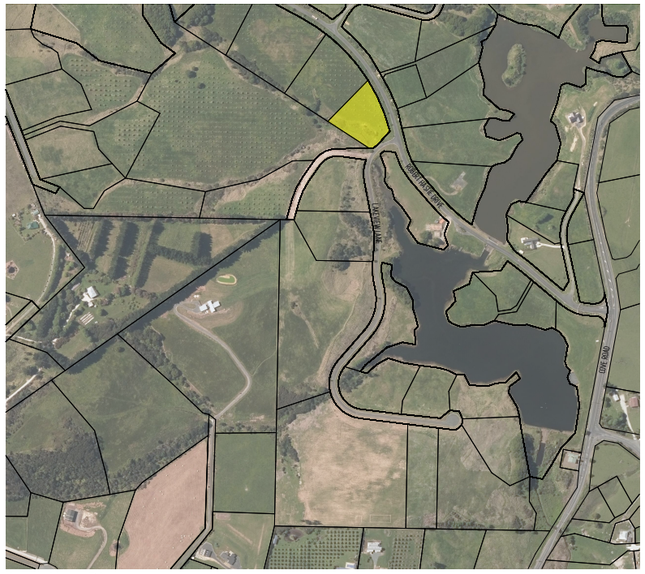

Location Plan

ID	Layout Name	Revision ID
	Cover	02
001	General	01
101	Overall Site Plan	02
102	Site Plan	02
103	Earthworks Plan	01
201	Floor Plan	02
301	Elevations	02
302	Elevations	02
401	Cross Sections	02
402	Cross Sections	02
403	Cross Sections	02
501	Foundation Plan	02
502	Dimension Plan	02
503	Bracing + Fixing Plan	02
504	Roof Framing Plan	02
505	Roofing Plan	02
506	Reflected Ceiling Plan	02
507	Interior Elevation	01
601	Plumbing and Drainage Plan	02
602	Electrical & Ventilation Plan	02
701	Details - Foundation	01
702	Details - Foundation	01
703	Details - Foundation	01
704	Details - Cladding	01
705	Details - Cladding	01
706	Details - Roofing	01
707	Details - Roofing	01
708	Details - Fixing	01
709	Details - Fixing	01
710	Details - Bracing	01
711	Details - GIB	01
712	Details - GIB	01
713	Details - HWC	01
714	Details - Drainage	01
715	Details - Sediment Control	01
801	Exterior Door & Window Schedule	02
802	Internal Door Schedule	01
803	Bracing Calculations	02

COASTAL HOMES

Project Title

ACDL Trustee Ltd. D&L Kendall

Site Address

Lot 81 The Sanctuary, Mangawhai

Drawing Issue

Building Consent

General

These drawings and the intellectual property it represents remain the copyright of CADetailer Limited.

These drawings must not be scaled. All dimensions to be read off the plans. All dimensions in millimetres unless stated otherwise otherwise.

Architectural Drawings to be read in conjunction with the Engineering Drawings, Specifications and Calculations

All work shall comply with the NZBC and all other relevant and associated standards, codes and Territorial Authority by-laws.

All work shall comply with the terms and conditions of the Building, Resource and Demolition Consents issued for this project.

All proprietary items and materials shall be handled, placed, stored, fixed, installed or applied in strict accordance with the manufacturers recommendations.

Contractor shall check and confirm on site all dimensions, levels, falls, heights etc. Any discrepancies or differences within the contract documents should be highlighted to the issuer of these drawings prior to starting the works.

Sediment and Soil run-off control shall be designed and installed by the licensed building practitioner prior to or during earthworks for the project. The sediment controls shall be installed in accordance with the requirements of the Territorial Authority.

Abbreviations

(Generally in accordance with NZS/AS 1100)

A	Area
AAV	Air Admittance Valve
AD	Above Datum
AFL	Above Floor Level
AP	Access Panel
Appr	Approved
AS	Australian Standard
B	Basin
BM	Benchmark
c/c	Centre to Centre
CB	Coach Bolt
CBI	Coordinated Building Information
CHS	Circular Hollow Section
cj	Control Joint
CL	Centre Line
cm	Centimeter
Conc	Concrete
Corr	Corrugated
COS	Check on Site
CP	Cesspit
crs	Centres
CS	Coach Screw
D	Desk
DB	Distribution Board
DEP	Dead End Path
DG	Disconnector Gully
DHS	Diamond Hi-Span (Purlin)
Dia	Diameter
Diag	Diagonal
Dim	Dimension
DN	Diameter Nominal
DP	Downpipe
DPC	Damp Proof Course
DPM	Damp Proof Membrane
DRG	Drawing
Dr	Dry
Du	Duct
Dw	Dishwasher
EA	Equal Angle
ej	Expansion Joint
EF	Extraction Fan
EH	Extra High
ENG	Engineer(ed)
F	Fridge
FL	Floor Level
FDL	Finished Deck Level
FFL	Finished Floor Level
FGL	Finished Ground Level
fg	Fixed Glass
FHR	Fire Hose Reel
FP	Fireplace
FRR	Fire Resistance Rating
Galv.	Galvanised
GB	Gas Bayonet
GC	Gas Califont
GT	Gully Trap
h	Hob
H	High
HD	Holding Down Bolt
HG	Hot Dipped Galvanised
HL	Heat Loss
Hor	Horizontal
HP	Heatpump
Ht	Hose tap
Hy	Hydrobox
IB	Inspection Board
ID	Inside Diameter
IL	Invert Level
IP	Inspection Point
kN	Kilonewton
kW	Kilowatt
l	Litre
L	Low
m	Metre
M	Medium
max.	Maximum
Mf	Manifold
Mi	Mirror
min.	Minimum
mm	Millimetre
MS	Mild Steel
Mx	Mixer
Mw	Microwave
N	Niche
nb	Nominal Bore
NZBC	New Zealand Building Code
NTS	Not to Scale
NZS	New Zealand Standard
O/A	Overall
O/F	Overflow
O/H	Overhead
od	Outside Diameter
ORG	Overflow Relief Gully
OU	Outdoor Unit
P	Power
pc	Precast Concrete
PFC	Parallel Flange Channel
R	Radius
RAB	Rigid Air Barrier
Rad	Radiata
RC	Reinforced Concrete
RE	Rodding Eye
REF	Reference
RH	Rangehood
RHS	Rolled Hollow Section
RL	Reducted Level
ROW	Right of Way
Rs	Rosehead
S	Sink
sc	Sawcut Joint
Sched	Schedule
SD	Smoke Detector
SED	Small End Diameter
SG8	Stress Grade 8
Sh	Shower
SHS	Square Hollow Section
Sht	Sheet
Sim	Similar
Sk	Sketch
SP	Soil Pipe
sq/m	Square Metre
SS	Sanitary Sewer
S/S	Stainless Steel
STC	Sound Transmission Class
SV	Stack Vent
SW	Stormwater
T	Tub
TBC	To be Confirmed
TFC	Tapered Flange Channel
TGV	Tongue, Groove and Vee Joint
TOP	Total Open Path
TV	Terminal Vent
Typ	Typical
t/s	Top Side
u/s	Under Side
UB	Universal Beam
UC	Universal Column
VH	Very High
W	Water
WC	Water Closet (Toilet)
WM	Washing Machine
WR	Wardrobe
WT	Wall Thickness

Zone Reference

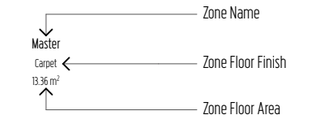

Exterior Joinery Coding

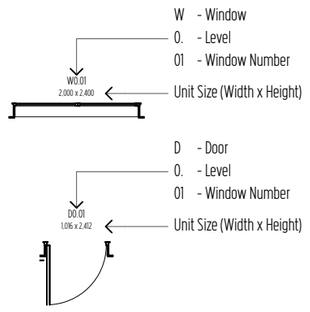

Drawing Titles

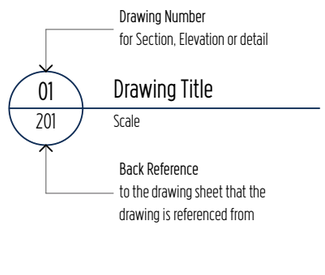

Drawing Markers

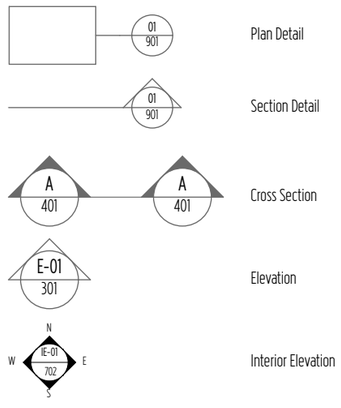

Expression of Levels



FL	Floor Level - not including floor finishings
FFL	Finished Floor Level - including floor finishings
FGL	Finished Ground Level
FDL	Finished Deck Level
FPL	Finished Patio Level
FCL	Finished Ceiling Level
AFL	Above Floor Level

Floor Levels shown on sections & elevations

Relative level shown on sections & details

COASTAL HOMES

Project Title

ACDL Trustee Ltd. D&L Kendall

Site Address

Lot 81 The Sanctuary, Mangawhai

Drawing Issue

Building Consent

Sheet Title

General

Scale	Drawn
N/A	Marc R. Vale
Date	Checked
27/06/21	CADetailer Ltd.
Drawing no.	Revision
001	01

All dimensions to be verified on site before commencing any work or producing shop drawings. Do not scale.
The copyright of this drawing remains with CH Northland Ltd and CADetailer Ltd.

RevID	ChID	Change Name	Date
01			27/06/21

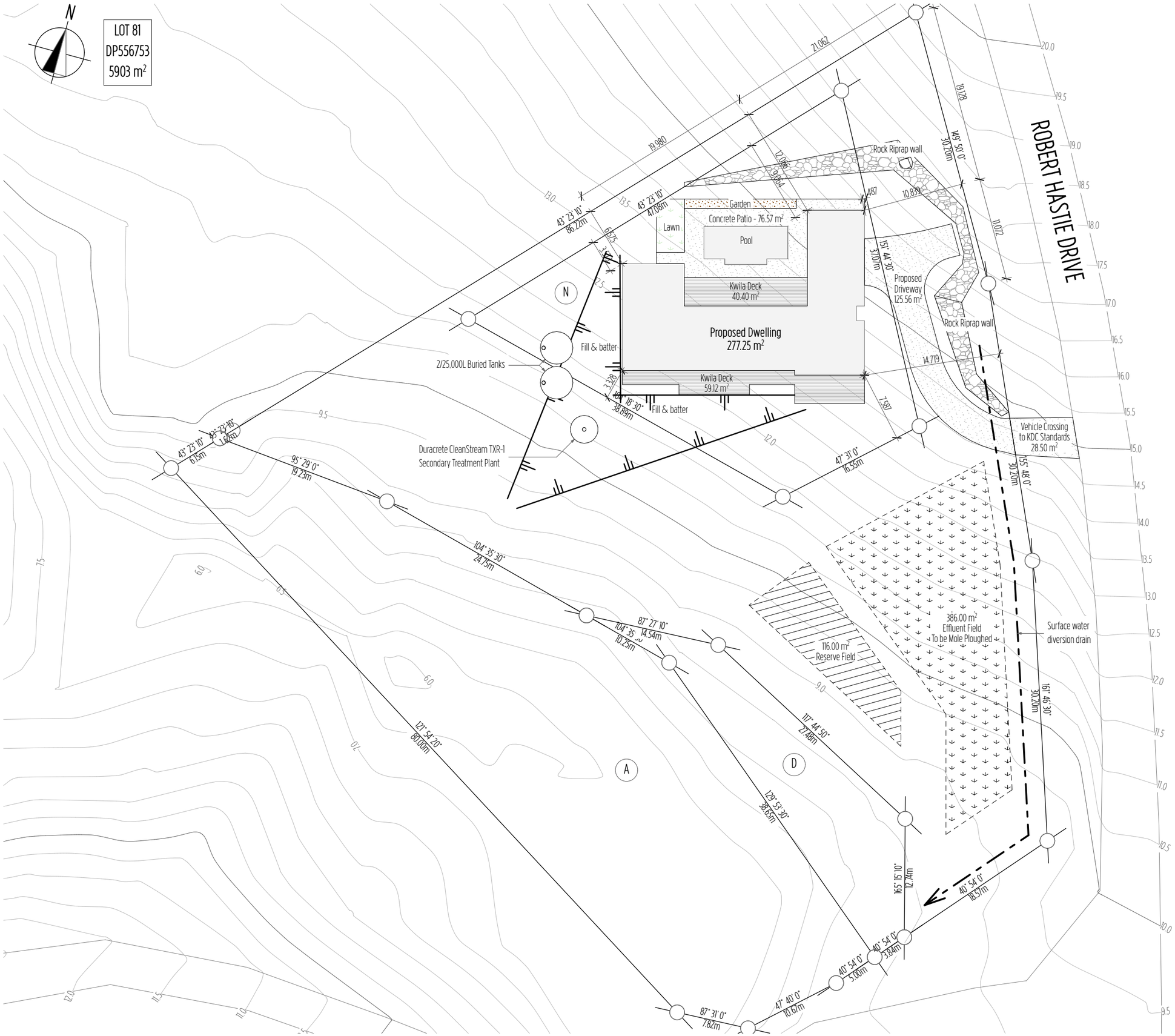

Key/Notes

Wind Zone -	High
Earthquake Zone -	1
Exposure Zone -	C
Climate Zone -	1
Territorial Authority -	Kaipara District Council
Environment -	Rural Harbour

Coverage - 35% max.
Actual Coverage - 3.84%

Impermeable Surfaces - 10% max.
Actual Impermeable Surfaces = 9.04%

Levels are in terms of the NZVD2016 Datum

Temporary Site Fences to be constructed around the site as per New Zealand Building Code Clause F5/AS1

Sediment and runoff control shall be designed and installed by the licensed building practitioner prior to or during earthworks for the project. The sediment controls shall be installed in accordance with the requirements of the acceptable guidelines for erosion and sediment control are documented in the ARC publication TP90.

Sediment and erosion control measures shall be the responsibility of the main contractor and shall be regularly checked and maintained as required during construction. Refer to earthworks plan for sediment control locations.

Refer to the On-site 'secondary' wastewater treatment / disposal system design reference WW_21076 by Wiley Geotechnical Ltd. dated 1 June 2021.

COASTAL HOMES

Project Title

ACDL Trustee Ltd. D&L Kendall

Site Address

Lot 81 The Sanctuary, Mangawhai

Drawing Issue

Building Consent

Sheet Title

Overall Site Plan

Scale	Drawn
1:400 @ A3	Marc R. Vale
Date	Checked
27/06/21	CADetailer Ltd.
Drawing no.	Revision
101	02

All dimensions to be verified on site before commencing any work or producing shop drawings. Do not scale.
The copyright of this drawing remains with CH Northland Ltd and CADetailer Ltd.

RevID	ChID	Change Name	Date
01			14/05/21
02	01	Building Consent	27/06/21

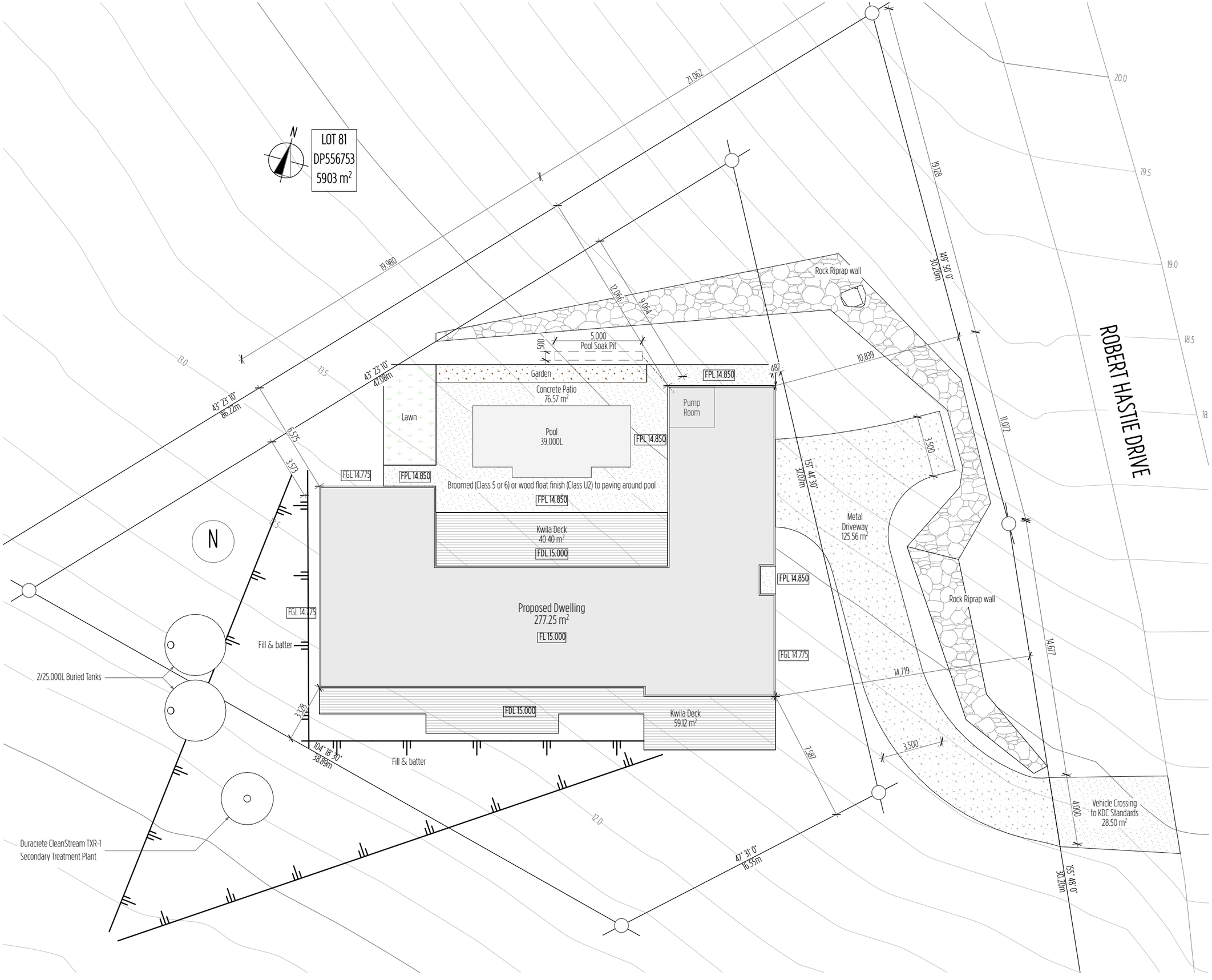

Key/Notes

Wind Zone -	High
Earthquake Zone -	1
Exposure Zone -	C
Climate Zone -	1
Territorial Authority -	Kaipara District Council
Environment -	Rural Harbour

Levels are in terms of the NZVD2016 Datum

A minimum 200 mm layer of compacted hard fill is recommended to be placed for a waffle slab (i.e Rib-Raft) with the foundation being designed for expansive site class 'M – Moderate', as per AS 2870. All topsoil and fill material must be removed before foundation construction commences.

Refer to the Geotechnical Investigation reference 21076 by Wiley Geotechnical Ltd. dated 27 May 2021 for specific site preparation details, bearing depth and capacity.

Broomed (Class 5 or 6) or wood float finish (Class U2) to all access route paving

Temporary Site Fences to be constructed around the site as per New Zealand Building Code Clause F5/AS1

Sediment and runoff control shall be designed and installed by the licensed building practitioner prior to or during earthworks for the project. The sediment controls shall be installed in accordance with the requirements of the acceptable guidelines for erosion and sediment control are documented in the ARC publication TP90.

Sediment and erosion control measures shall be the responsibility of the main contractor and shall be regularly checked and maintained as required during construction. Refer to earthworks plan for sediment control locations.

COASTAL HOMES

Project Title

ACDL Trustee Ltd. D&L Kendall

Site Address

Lot 81 The Sanctuary, Mangawhai

Drawing Issue

Building Consent

Sheet Title

Site Plan

Scale	Drawn
1:200 @ A3	Marc R. Vale
Date	Checked
27/06/21	CADetailer Ltd.
Drawing no.	Revision
102	02

All dimensions to be verified on site before commencing any work or producing shop drawings. Do not scale.
The copyright of this drawing remains with CH Northland Ltd and CADetailer Ltd.

RevID	ChID	Change Name	Date
01			14/05/21
02	01	Building Consent	27/06/21

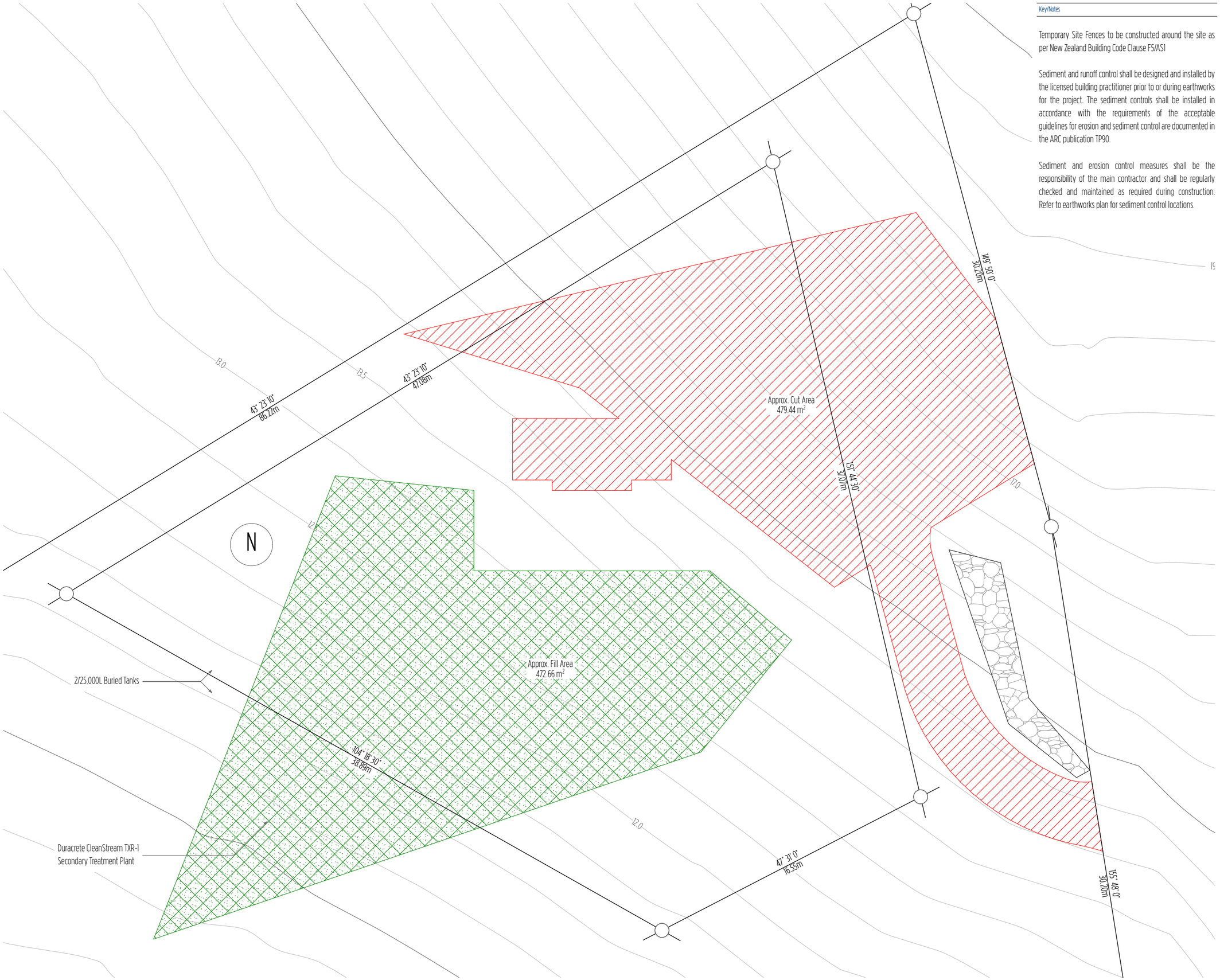

Key/Notes

Temporary Site Fences to be constructed around the site as per New Zealand Building Code Clause F5/AS1

Sediment and runoff control shall be designed and installed by the licensed building practitioner prior to or during earthworks for the project. The sediment controls shall be installed in accordance with the requirements of the acceptable guidelines for erosion and sediment control are documented in the ARC publication TP90.

Sediment and erosion control measures shall be the responsibility of the main contractor and shall be regularly checked and maintained as required during construction. Refer to earthworks plan for sediment control locations.

Key/Notes

Refer to the Geotechnical Investigation reference 21076 by Wiley Geotechnical Ltd. dated 27 May 2021 for specific site preparation details, bearing depth and capacity.

Wiley Geotechnical Ltd recommend that the earthworks are undertaken by an experienced contractor familiar with the contents of this report and is experienced in these soils.

It is considered that the vast majority of on-site soil material shall be suitable to be utilised as engineered fill supporting the proposed residential development. This is expected to primarily consist of silty clay soil and highly to completely weathered rock material. We recommend that all overlying topsoil and organic rich material is stripped and removed from the proposed cut areas prior to excavating the in-situ soil material. The excavated in-situ soil should be handled separately to the topsoil material. No topsoil should be used as, mixed with or remain below any engineered fill material. The cut excavation areas should be graded to allow the flow of stormwater away from the area. Suitable erosion and sediment control methodologies should be employed. Any sloping ground that is excavated into should be battered back to a slope of 3:1 (H:V). Once cut excavation are complete planting or regressing of the areas may have to be employed or long-term erosion and sediment control measures implemented. At this point we would envisage a maximum allowable slope of on-site engineered fill material being 3:1 (H:V), while imported engineered hardfill may be placed up to a maximum slope of 2:1 (H:V).

A minimum 200 mm layer of compacted hard fill is recommended to be placed for a waffle slab (i.e Rib-Raft) with the foundation being designed for expansive site class 'M – Moderate', as per AS 2870. All topsoil and fill material must be removed before foundation construction commences.

Approximate Earthworks
Total Fill Area - 472.66 m^2
Total Fill Volume - 131.23 m^3
Total Cut Area - 479.44 m^2
Total Cut Volume - 155.50 m^3
Total Earthworks Area - 952.10 m^2
Total Earthworks Volume - 286.73 m^3

COASTAL HOMES

Project Title
ACDL Trustee Ltd. D&L Kendall

Site Address
Lot 81 The Sanctuary, Mangawhai

Drawing Issue
Building Consent

Sheet Title
Earthworks Plan

Scale	Drawn
1:200 @ A3	Marc R. Vale
Date	Checked
27/06/21	CADetailer Ltd.
Drawing no.	Revision
103	01

All dimensions to be verified on site before commencing any work or producing shop drawings. Do not scale.
The copyright of this drawing remains with CH Northland Ltd and CADetailer Ltd.

RevID	ChID	Change Name	Date
01			27/06/21

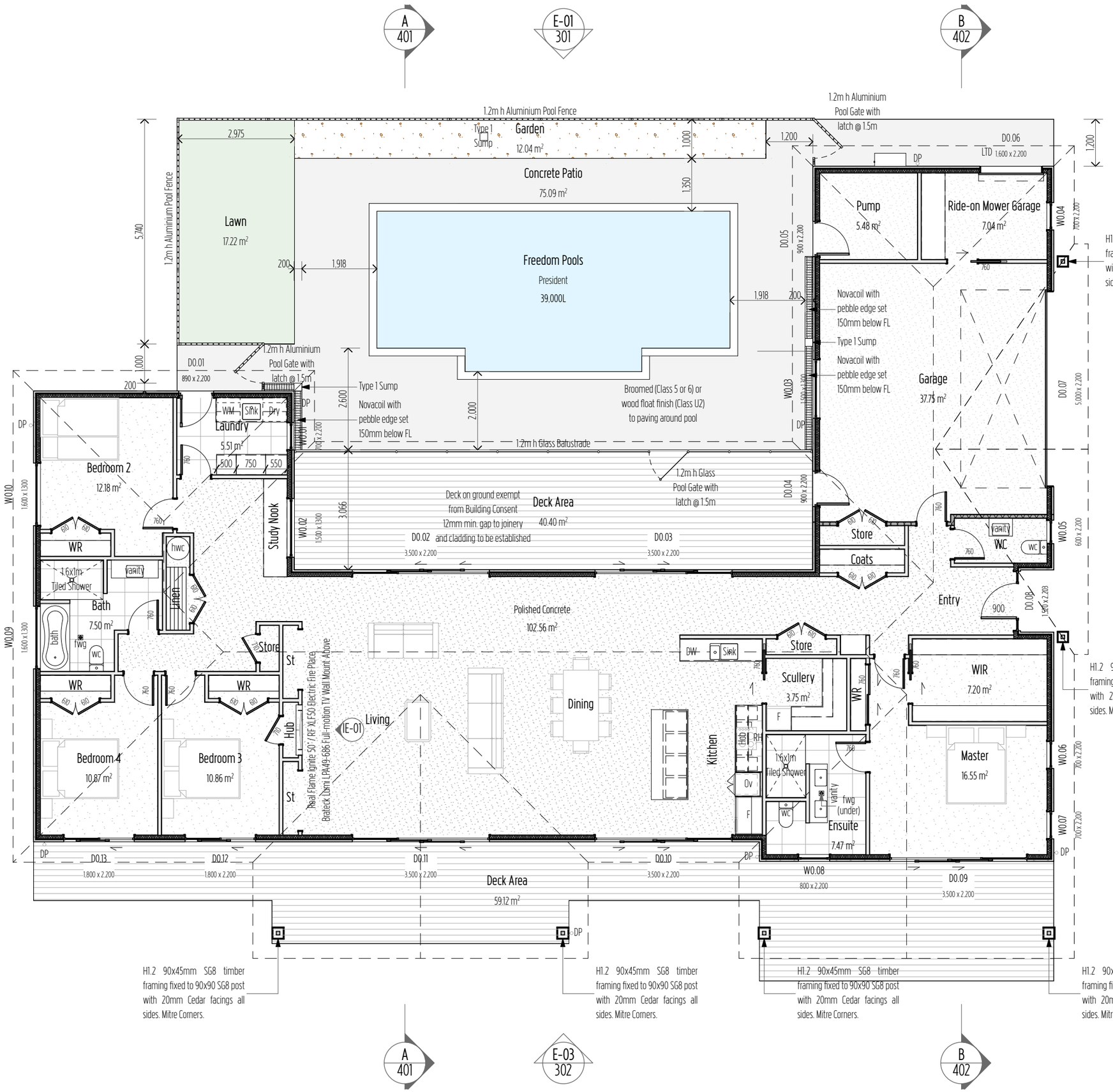

Key/Notes

- Insulated H1.2 SG8 wall framing
- Acoustic insulated H1.2 SG8 wall framing
- Un-insulated H1.2 SG8 wall framing

Waterproofing Membrane installed to entire bathroom/ensuite floor area with 2.1m upstand on walls 1.5m from corner of shower

All flooring tiles to a mean coefficient of friction no less than 0.4

Square stop to ceiling/wall junction

Internal shower glass to be safety glass

Main access deck to be in place for the final inspection, any steps to be max. 190mm riser and min. 280mm tread

Ground Floor Area over Framing
269.69 m²

Ground Floor Area over Cladding
277.25 m²

COASTAL HOMES

Project Title
ACDL Trustee Ltd. D&L Kendall

Site Address
Lot 81 The Sanctuary, Mangawhai

Drawing Issue
Building Consent

Sheet Title
Floor Plan

Scale	Drawn
1:100 @ A3	Marc R. Vale
Date	Checked
27/06/21	CADetailer Ltd.
Drawing no.	Revision
201	02

All dimensions to be verified on site before commencing any work or producing shop drawings. Do not scale.
The copyright of this drawing remains with CH Northland Ltd and CADetailer Ltd.

RevID	ChID	Change Name	Date
01			14/05/21
02	01	Building Consent	27/06/21



E-01 / 201 North Elevation

Scale 1:100

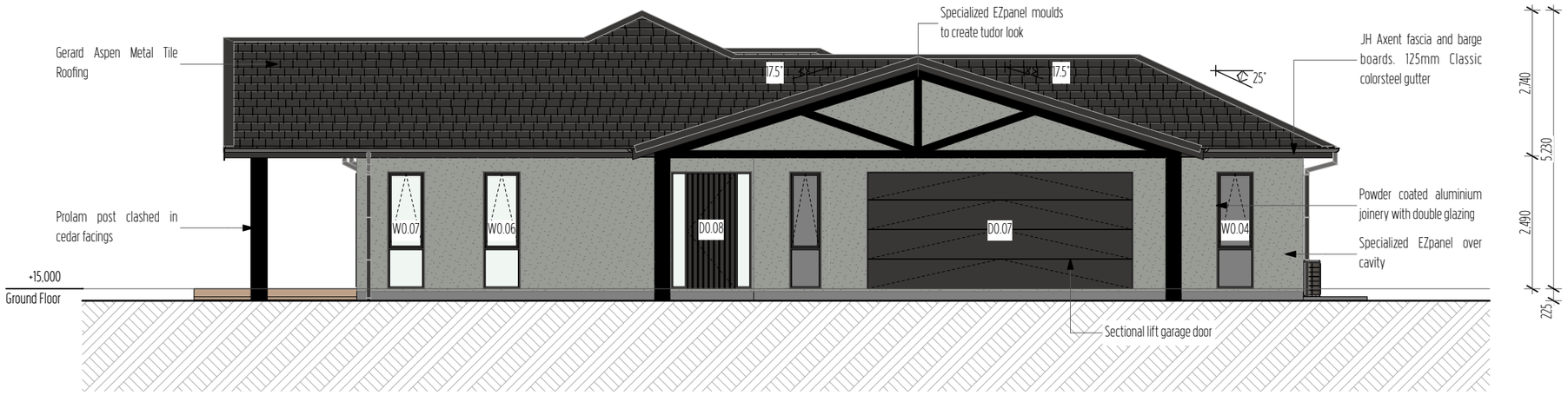

E-02 / 201 East Elevation

Scale 1:100

Risk Factor	Description	Risk	Score
Wind Zone	High	M	1
Number of Storeys	Single Storey	L	0
Roof/Wall Intersection Design	Fully protected (e.g. hip and gable roof with eaves)	L	0
Eaves Width	450mm - 600mm wide	M	1
Envelope Complexity	Simple L-shape with single cladding type.	L	0
Deck Design	Timber slat deck at ground floor level	L	0
		Total Score: 2	

Selected Cladding: Stucco over nominal 20mm drained cavity

COASTAL HOMES

Project Title

ACDL Trustee Ltd. D&L Kendall

Site Address

Lot 81 The Sanctuary, Mangawhai

Drawing Issue

Building Consent

Sheet Title

Elevations

Scale	Drawn
1:100 @ A3	Marc R. Vale
Date	Checked
27/06/21	CADetailer Ltd.
Drawing no.	Revision
301	02

All dimensions to be verified on site before commencing any work or producing shop drawings. Do not scale.
The copyright of this drawing remains with CH Northland Ltd and CADetailer Ltd.

RevID	ChID	Change Name	Date
01			14/05/21
02	01	Building Consent	27/06/21



E-03
201

South Elevation

Scale 1:100



E-04
201

West Elevation

Scale 1:100

Risk Factor	Description	Risk	Score
Wind Zone	High	M	1
Number of Storeys	Single Storey	L	0
Roof/Wall Intersection Design	Fully protected (e.g. hip and gable roof with eaves)	L	0
Eaves Width	450mm - 600mm wide	M	1
Envelope Complexity	Simple L-shape with single cladding type.	L	0
Deck Design	Timber slat deck at ground floor level	L	0
		Total Score: 2	
Selected Cladding:	Stucco over nominal 20mm drained cavity		

COASTAL HOMES

Project Title

ACDL Trustee Ltd. D&L Kendall

Site Address

Lot 81 The Sanctuary, Mangawhai

Drawing Issue

Building Consent

Sheet Title

Elevations

Scale	Drawn
1:100 @ A3	Marc R. Vale
Date	Checked
27/06/21	CADetailer Ltd.
Drawing no.	Revision
302	02

All dimensions to be verified on site before commencing any work or producing shop drawings. Do not scale.
The copyright of this drawing remains with CH Northland Ltd and CADetailer Ltd.

RevID	ChID	Change Name	Date
01			14/05/21
02	01	Building Consent	27/06/21

Stud Framing as per NZS 3604:2011 Section 8 - Walls		High Wind
from Table 8.2 - Load bearing walls		
Stud height	Stud size	Stud Spacing
2.7m	90x45mm	400crs
3.0m	90x45mm	300crs
3.6m	2/90x45mm	300crs
from Table 8.4 - Non-load bearing walls		
Stud height	Stud size	Stud Spacing
2.7m	90x45mm	400crs
3.0m	90x45mm	300crs

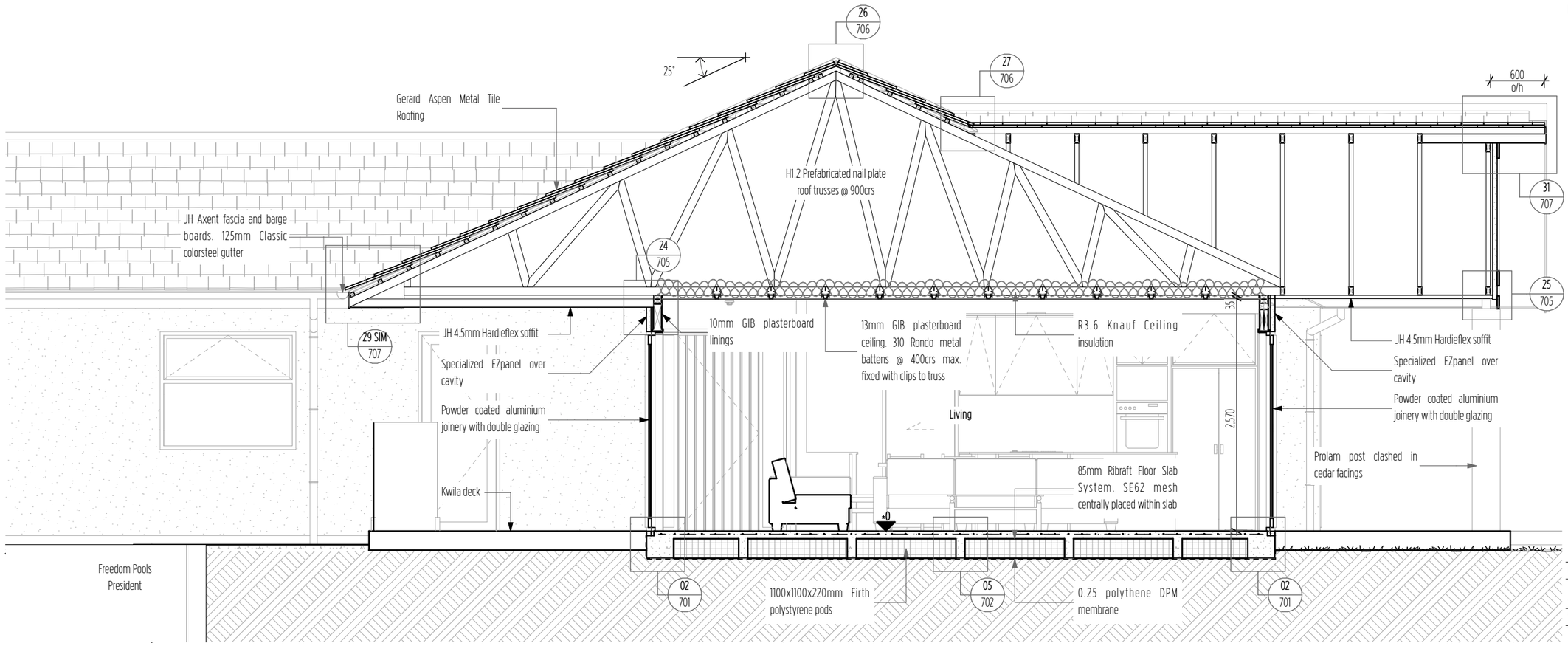

A
201, 504

Cross Section A-A

Scale 1:50

Key/Notes

Refer to the Geotechnical Investigation reference 21076 by Wiley Geotechnical Ltd. dated 27 May 2021 for specific site preparation details, bearing depth and capacity.

A minimum 200 mm layer of compacted hard fill is recommended to be placed for a waffle slab (i.e Rib-Raft) with the foundation being designed for expansive site class 'M – Moderate', as per AS 2870. All topsoil and fill material must be removed before foundation construction commences.

Square stop to ceiling/wall junction

All structural fixings sheltered and exposed in Exposure Zone D to be Type 304 stainless steel as per NZS3604:2011

COASTAL HOMES

Project Title

ACDL Trustee Ltd. D&L Kendall

Site Address

Lot 81 The Sanctuary, Mangawhai

Drawing Issue

Building Consent

Sheet Title

Cross Sections

Scale	Drawn
1:50 @ A3	Marc R. Vale
Date	Checked
27/06/21	CADetailer Ltd.
Drawing no.	Revision
401	02

All dimensions to be verified on site before commencing any work or producing shop drawings. Do not scale.
The copyright of this drawing remains with CH Northland Ltd and CADetailer Ltd.

RevID	ChID	Change Name	Date
01			14/05/21
02	01	Building Consent	27/06/21

Stud Framing as per NZS 3604:2011 Section 8 - Walls		High Wind
from Table 8.2 - Load bearing walls		
Stud height	Stud size	Stud Spacing
2.7m	90x45mm	400crs
3.0m	90x45mm	300crs
3.6m	2/90x45mm	300crs
from Table 8.4 - Non-load bearing walls		
Stud height	Stud size	Stud Spacing
2.7m	90x45mm	400crs
3.0m	90x45mm	300crs

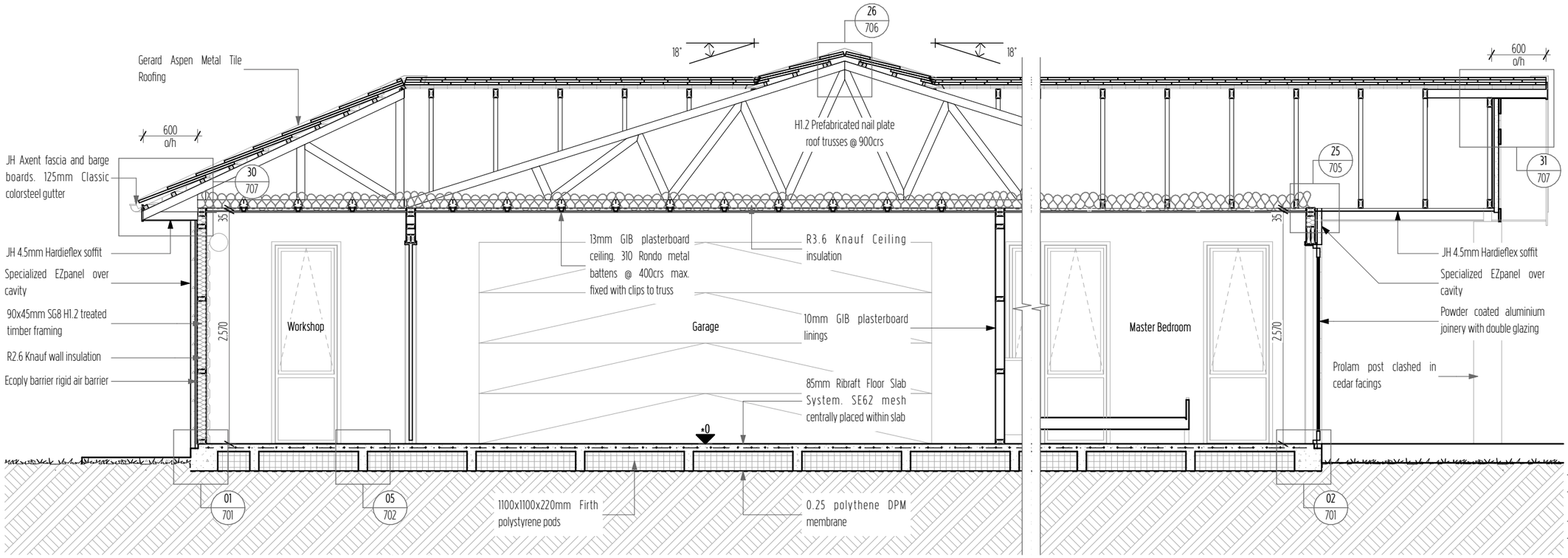

B
201, 504

Cross Section B-B

Scale 1:50

Key/Notes

Refer to the Geotechnical Investigation reference 21076 by Wiley Geotechnical Ltd. dated 27 May 2021 for specific site preparation details, bearing depth and capacity.

A minimum 200 mm layer of compacted hard fill is recommended to be placed for a waffle slab (i.e Rib-Raft) with the foundation being designed for expansive site class 'M – Moderate', as per AS 2870. All topsoil and fill material must be removed before foundation construction commences.

Square stop to ceiling/wall junction

All structural fixings sheltered and exposed in Exposure Zone D to be Type 304 stainless steel as per NZS3604:2011

COASTAL HOMES

Project Title

ACDL Trustee Ltd. D&L Kendall

Site Address

Lot 81 The Sanctuary, Mangawhai

Drawing Issue

Building Consent

Sheet Title

Cross Sections

Scale	Drawn
1:50 @ A3	Marc R. Vale
Date	Checked
27/06/21	CADetailer Ltd.
Drawing no.	Revision
402	02

All dimensions to be verified on site before commencing any work or producing shop drawings. Do not scale.
The copyright of this drawing remains with CH Northland Ltd and CADetailer Ltd.

RevID	ChID	Change Name	Date
01			14/05/21
02	01	Building Consent	27/06/21

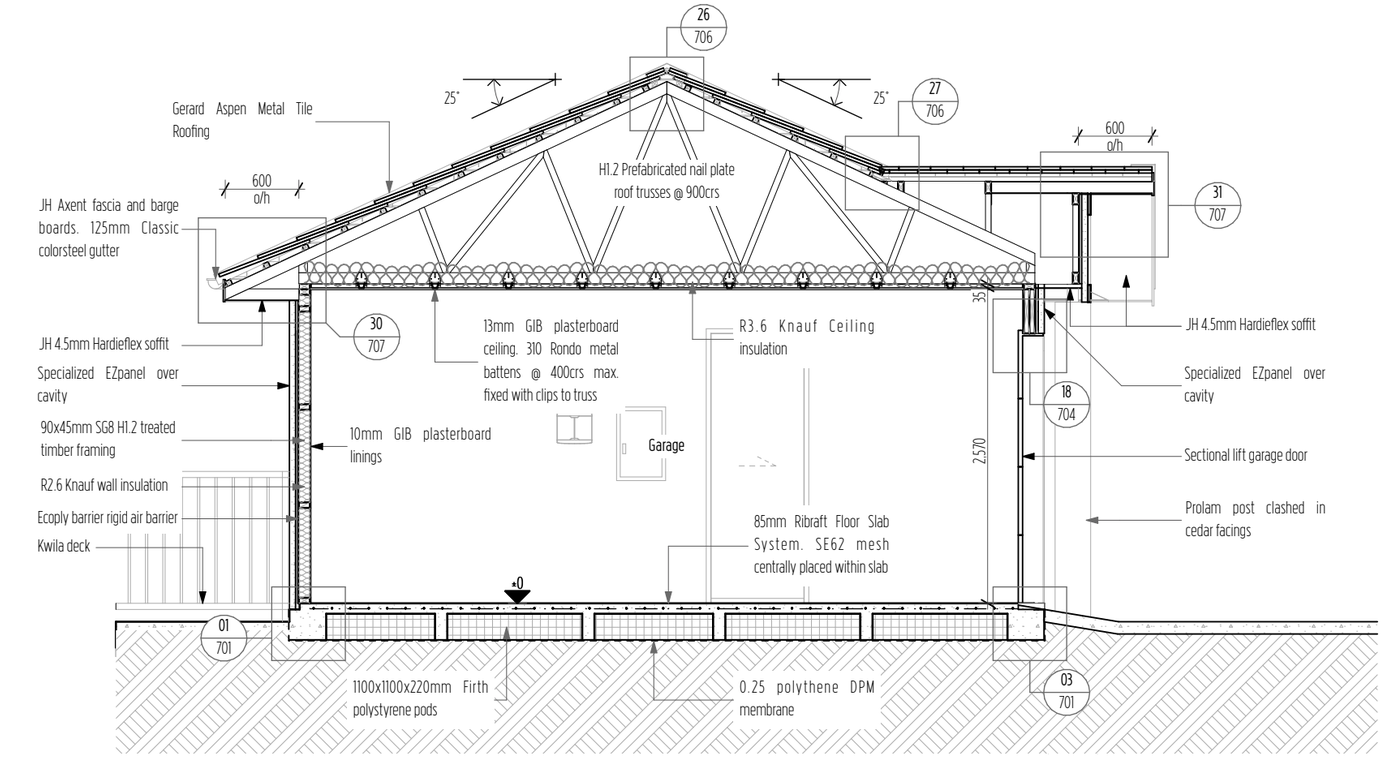

C
201, 504

Cross Section C-C

Scale 1:50

Key/Notes

Refer to the Geotechnical Investigation reference 21076 by Wiley Geotechnical Ltd. dated 27 May 2021 for specific site preparation details, bearing depth and capacity.

A minimum 200 mm layer of compacted hard fill is recommended to be placed for a waffle slab (i.e Rib-Raft) with the foundation being designed for expansive site class 'M – Moderate', as per AS 2870. All topsoil and fill material must be removed before foundation construction commences.

Square stop to ceiling/wall junction

All structural fixings sheltered and exposed in Exposure Zone D to be Type 304 stainless steel as per NZS3604:2011

Stud Framing as per NZS 3604:2011 Section 8 - Walls			High Wind
from Table 8.2 - Load bearing walls			
	Stud height	Stud size	Stud Spacing
	2.7m	90x45mm	400crs
	3.0m	90x45mm	300crs
	3.6m	2/90x45mm	300crs
from Table 8.4 - Non-load bearing walls			
	Stud height	Stud size	Stud Spacing
	2.7m	90x45mm	400crs
	3.0m	90x45mm	300crs

COASTAL HOMES

Project Title

ACDL Trustee Ltd. D&L Kendall

Site Address

Lot 81 The Sanctuary, Mangawhai

Drawing Issue

Building Consent

Sheet Title

Cross Sections

Scale	Drawn
1:50 @ A3	Marc R. Vale
Date	Checked
27/06/21	CADetailer Ltd.
Drawing no.	Revision
403	02

All dimensions to be verified on site before commencing any work or producing shop drawings. Do not scale.
The copyright of this drawing remains with CH Northland Ltd and CADetailer Ltd.

RevID	ChID	Change Name	Date
01			14/05/21
02	01	Building Consent	27/06/21

Key/Notes

Refer to the Geotechnical Investigation reference 21076 by Wiley Geotechnical Ltd. dated 27 May 2021 for specific site preparation details, bearing depth and capacity.

A minimum 200 mm layer of compacted hard fill is recommended to be placed for a waffle slab (i.e Rib-Raft) with the foundation being designed for expansive site class 'M – Moderate', as per AS 2870. All topsoil and fill material must be removed before foundation construction commences.

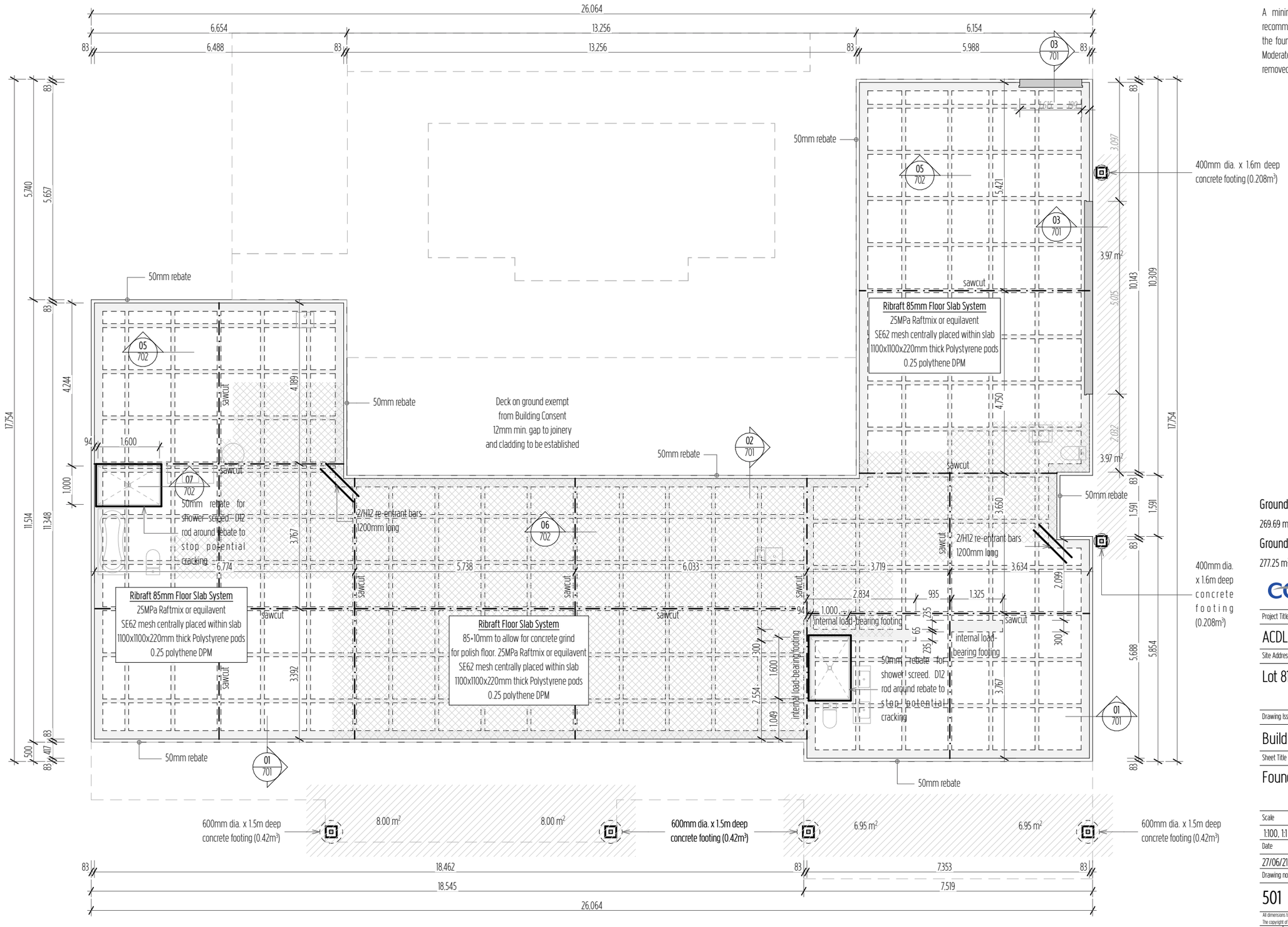

Ground Floor Area over Framing

269.69 m²

Ground Floor Area over Cladding

277.25 m²

COASTAL HOMES

Project Title

ACDL Trustee Ltd. D&L Kendall

Site Address

Lot 81 The Sanctuary, Mangawhai

Drawing Issue

Building Consent

Sheet Title

Foundation Plan

Scale	Drawn
1:100, 1:1 @ A3	Marc R. Vale
Date	Checked
27/06/21	CADetailer Ltd.
Drawing no.	Revision
501	02

All dimensions to be verified on site before commencing any work or producing shop drawings. Do not scale.
The copyright of this drawing remains with CH Northland Ltd and CADetailer Ltd.

RevID	ChID	Change Name	Date
01			14/05/21
02	01	Building Consent	27/06/21



Key/Notes

Trimming Studs shall be sized in accordance with NZS 3604:2001 Table 8.5

Fix bottom plate with M12 through bolts @ 600crs & 150mm from ends. 120mm min.
embedment into header block

Center all internal doors unless dimensioned otherwise

Ground Floor Area over Framing
269.69 m²

Ground Floor Area over Cladding
277.25 m²

COASTAL HOMES

Project Title
ACDL Trustee Ltd. D&L Kendall

Site Address
Lot 81 The Sanctuary, Mangawhai

Drawing Issue
Building Consent

Sheet Title
Dimension Plan

Scale	Drawn
1:100 @ A3	Marc R. Vale
Date	Checked
27/06/21	CADetailer Ltd.
Drawing no.	Revision
502	02

All dimensions to be verified on site before commencing any work or producing shop drawings. Do not scale.
The copyright of this drawing remains with CH Northland Ltd and CADetailer Ltd.

RevID	ChID	Change Name	Date
01			14/05/21
02	01	Building Consent	27/06/21

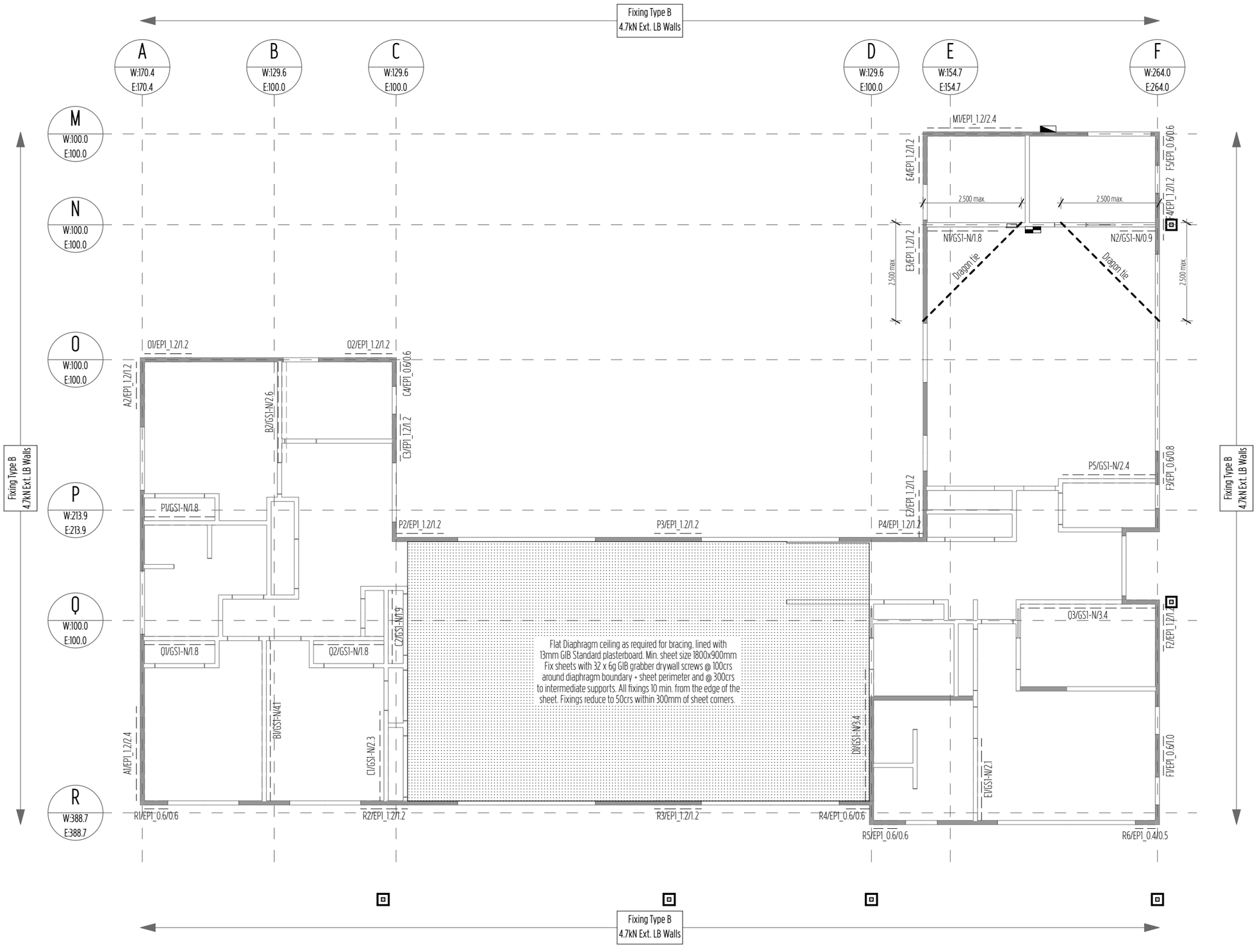

Key/Notes

Load-bearing wall

Non-Load bearing wall

Stud to Top Plate fixing as per MiTek Structural fixings on-site Guide page 88 as an alternative to NZS3604:2011 table 8.18

Lintel fixing as per MiTek Structural fixings on-site Guide page 73 as an alternative to NZS3604:2011 table 8.14 & figure 8.12

All bracing elements shall be installed and fixed as per the manufacturers recommendations.

COASTAL HOMES

Project Title

ACDL Trustee Ltd. D&L Kendall

Site Address

Lot 81 The Sanctuary, Mangawhai

Drawing Issue

Building Consent

Sheet Title

Bracing + Fixing Plan

Scale	Drawn
1:100 @ A3	Marc R. Vale
Date	Checked
27/06/21	CADetailer Ltd.
Drawing no.	Revision
503	02

All dimensions to be verified on site before commencing any work or producing shop drawings. Do not scale.
The copyright of this drawing remains with CH Northland Ltd and CADetailer Ltd.

RevID	ChID	Change Name	Date
01			14/05/21
02	01	Building Consent	27/06/21

A 401

B 402

C 403

Total Roof Plan Area - 405.45 m²

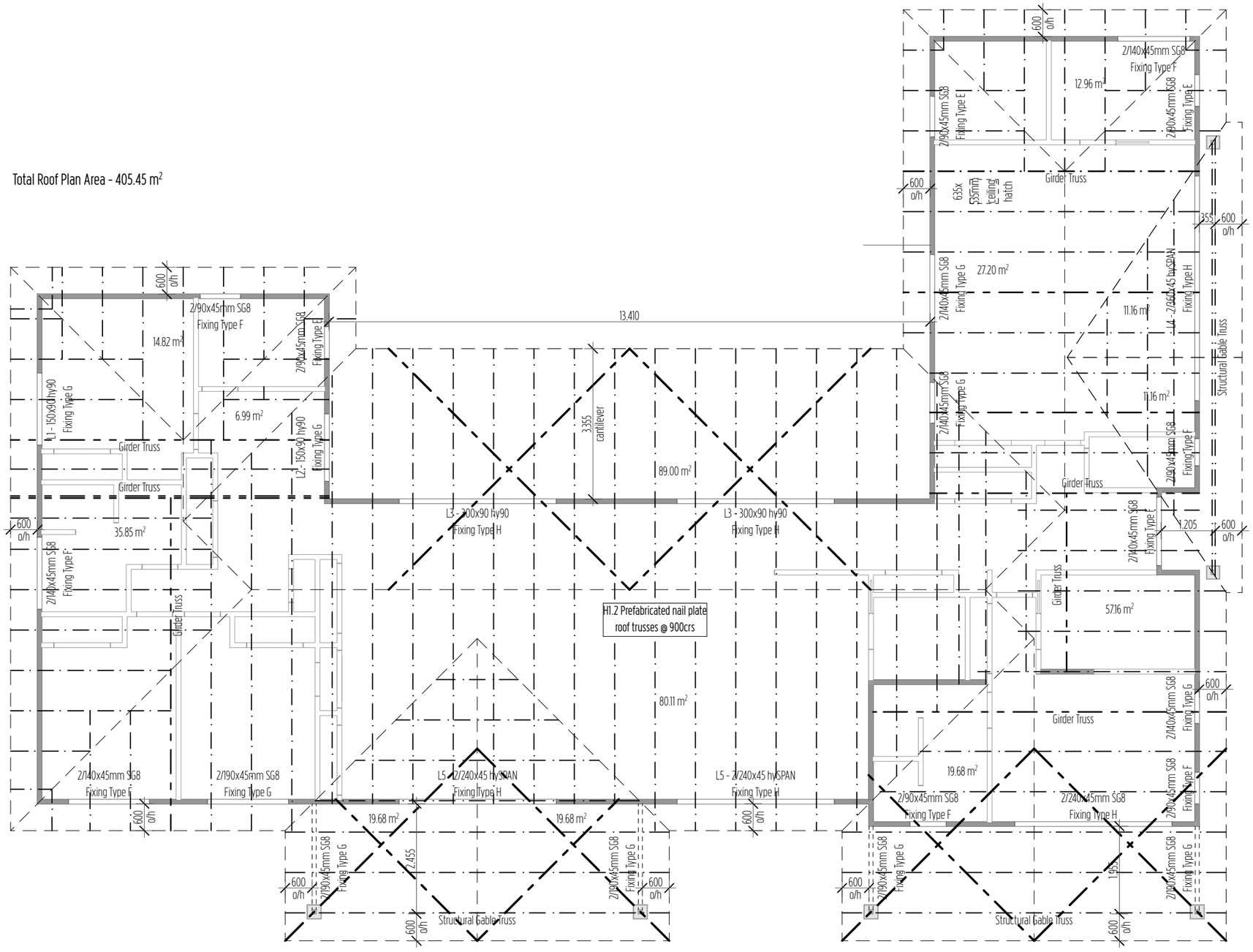

Key/Notes

- Load-bearing wall
- Non-Load bearing wall
- Roof plane Brace - pair of tensioned and crossed LUMBERLOK Strip Brace running continuously from ridge to top plate

Roof bracing as per NZS3604:2011 sections 10.3 & 10.4. 1 brace per 50m2 for light roof

Lintel and beam sizes as per NZS3604:2011 table 8.9 & designIT calculations

COASTAL HOMES

Project Title

ACDL Trustee Ltd. D&L Kendall

Site Address

Lot 81 The Sanctuary, Mangawhai

Drawing Issue

Building Consent

Sheet Title

Roof Framing Plan

Scale	Drawn
1:100, 1:1 @ A3	Marc R. Vale
Date	Checked
27/06/21	CADetailer Ltd.
Drawing no.	Revision
504	02

All dimensions to be verified on site before commencing any work or producing shop drawings. Do not scale.
The copyright of this drawing remains with CH Northland Ltd and CADetailer Ltd.

RevID	ChID	Change Name	Date
01			14/05/21
02	01	Building Consent	27/06/21

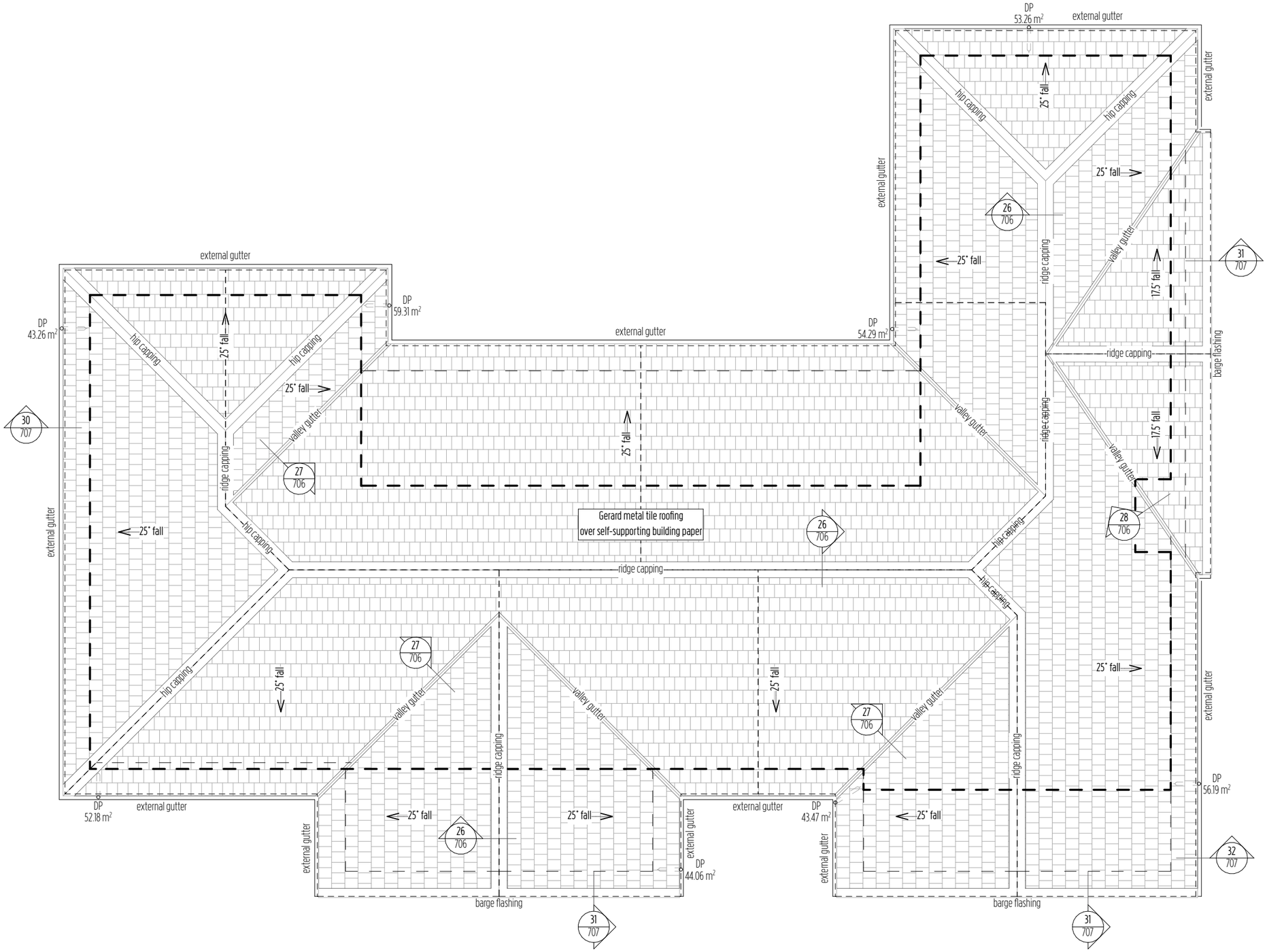

Key/Notes

– – –	Building outline over framing
- - - - -	Roof plan catchment area
5º fall →	Roof pitch and direction of fall
DP	80Ø downpipe location
→	Direction of 1:100 gutter fall
8.51 m²	Roof plan area served by downpipe

Roof Catchment Area

Note: Catchment areas exclusive of external gutters.

External Gutter Calculations

Diamond 125 Box colorsteel gutter cross sectional area = 7500mm².
NZBC stipulates this size gutter services 67m² maximum of plan roof area ÷
80mm Ø downpipe services 70m²

All roof flashings are to E2/AS1

COASTAL HOMES

Project Title

ACDL Trustee Ltd. D&L Kendall

Site Address

Lot 81 The Sanctuary, Mangawhai

Drawing Issue

Building Consent

Sheet Title

Roofing Plan

Scale	Drawn
1:100 @ A3	Marc R. Vale
Date	Checked
27/06/21	CADetailer Ltd.
Drawing no.	Revision
505	02

All dimensions to be verified on site before commencing any work or producing shop drawings. Do not scale.
The copyright of this drawing remains with CH Northland Ltd and CADetailer Ltd.

RevID	ChID	Change Name	Date
01			14/05/21
02	01	Building Consent	27/06/21

Key/Notes

- Flat 13mm GIB Standard Ceiling
- Flat 13mm GIB Aqualine ceiling
- Flat 4.5mm JH Hardieflex soffit

Square stop to ceiling/wall junction

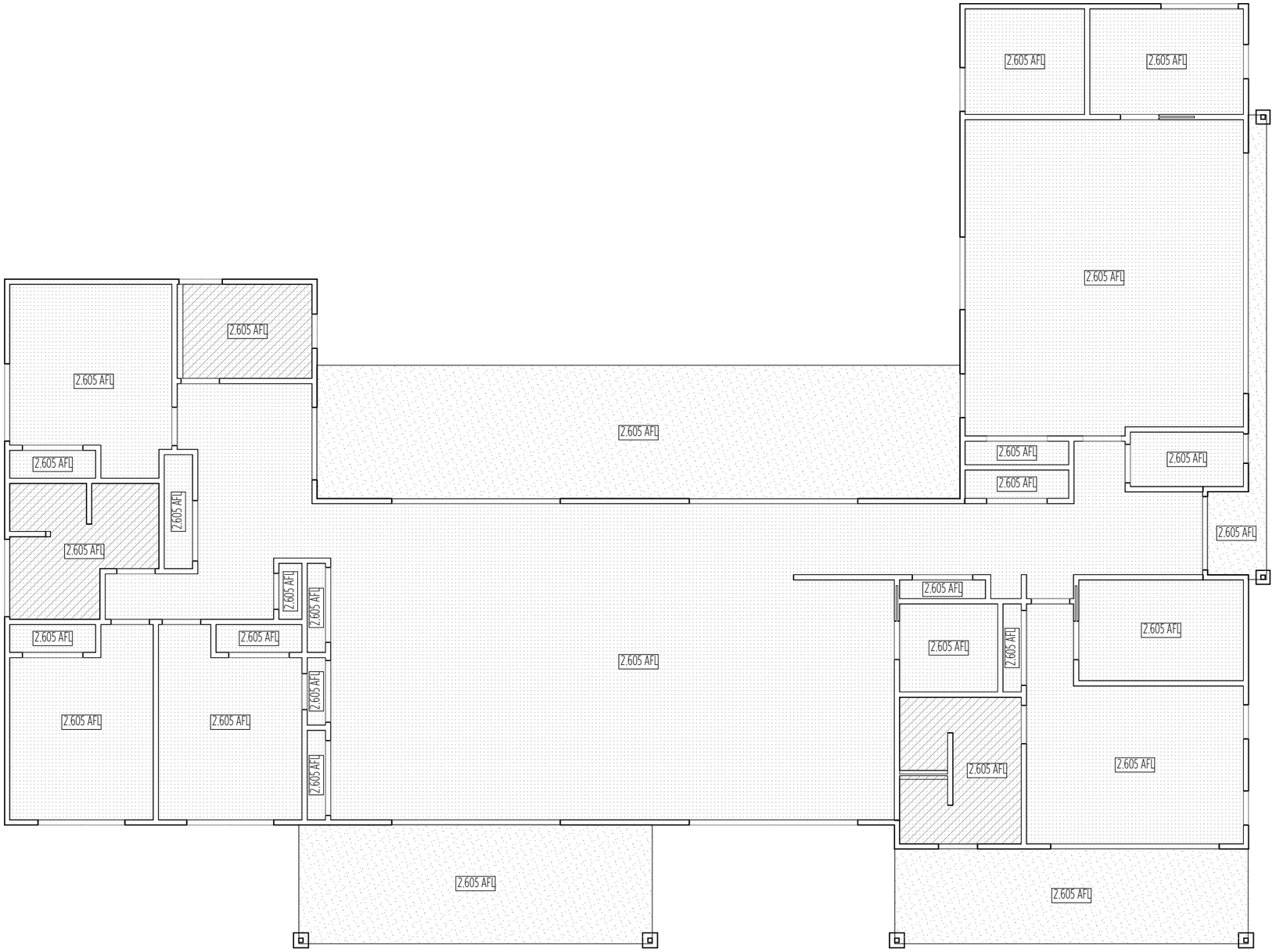

COASTAL HOMES

Project Title

ACDL Trustee Ltd. D&L Kendall

Site Address

Lot 81 The Sanctuary, Mangawhai

Drawing Issue

Building Consent

Sheet Title

Reflected Ceiling Plan

Scale	Drawn
1:100 @ A3	Marc R. Vale
Date	Checked
27/06/21	CADetailer Ltd.
Drawing no.	Revision
506	02

All dimensions to be verified on site before commencing any work or producing shop drawings. Do not scale.
The copyright of this drawing remains with CH Northland Ltd and CADetailer Ltd.

RevID	ChID	Change Name	Date
01			14/05/21
02	01	Building Consent	27/06/21

Key/Notes

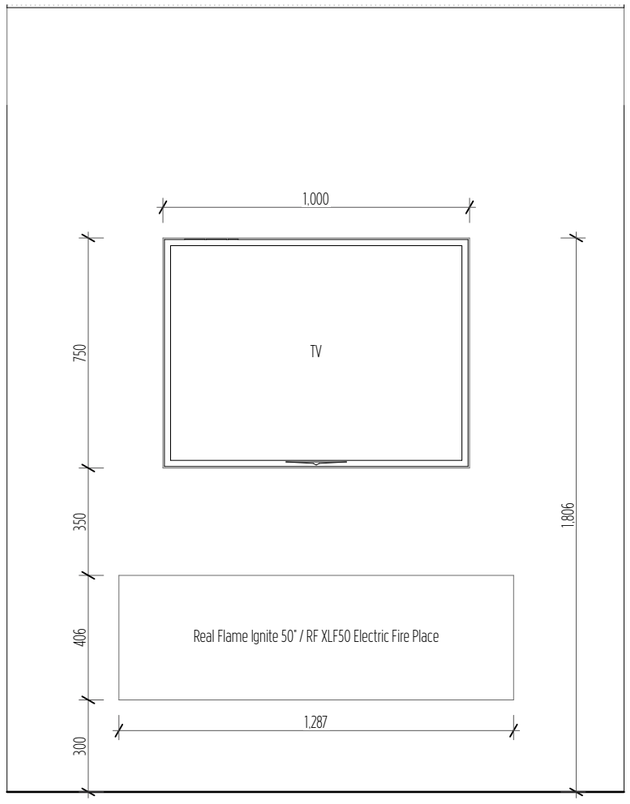

IE-01
201

Living Elevation

Scale 1:20

COASTAL HOMES

Project Title

ACDL Trustee Ltd. D&L Kendall

Site Address

Lot 81 The Sanctuary, Mangawhai

Drawing Issue

Building Consent

Sheet Title

Interior Elevation

Scale	Drawn
1:20 @ A3	Marc R. Vale
Date	Checked
27/06/21	CADetailer Ltd.
Drawing no.	Revision
507	01

All dimensions to be verified on site before commencing any work or producing shop drawings. Do not scale.
The copyright of this drawing remains with CH Northland Ltd and CADetailer Ltd.

RevID	ChID	Change Name	Date
01			27/06/21

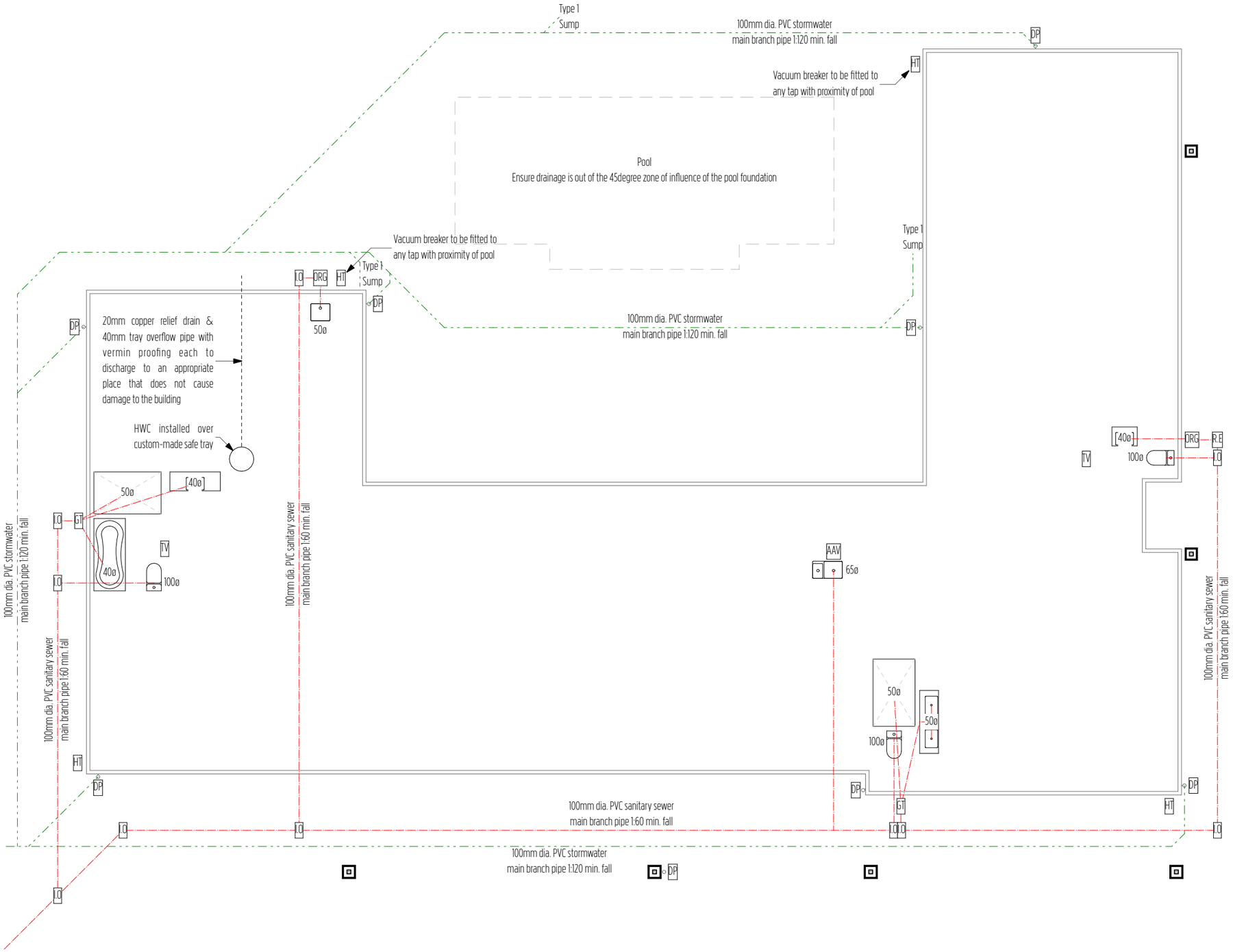

Key/Notes

RE	Rodding Eye
IP	Inspection Point
AAV	Air Admittance Valve
ORG	Overflow Relief Gully
DG	Disconnector Gully
TV	Terminal Vent
FV	Fixture Vent
SV	Stack Vent
	uPVC Sanitary Sewer Pipe
DP	Downpipe
	100mm uPVC Stormwater Pipe
HT	Hosetap

Key/Notes

Carry out all sanitary sewer work and complete all tests to NZBC G1/AS1: 2.0, 3.0 and AS/NZS 3500.2, as modified by NZBC G13/AS3

1:40 for 65mm diameter and under
1:60 for 100mm diameter and under

Carry out all stormwater work and complete all tests to NZBC E1/AS1

1:120 for 100mm diameter and under

Lay uPVC pipe systems to relevant sections of AS/NZS 2032, NZS 2566.1 and AS/NZS 2566.2

All plumbing and drainage to be confirmed by contractor before commencement of works

A registered drainlayer/plumber is to provide an as-built layout to council

Drains installed under buildings shall be:
a) Straight and of even gradient,
b) Separated from the building foundation by at least 25 mm, and
c) When passing through concrete, sleeved or wrapped in a durable and flexible material to allow for expansion and contraction.

Drains passing beneath buildings with a concrete slab on the ground floor shall have in addition to Paragraph 5.8.1:
a) 50 mm clearance from the top of the pipe to the underside of the slab, and
b) Junctions beneath the building joining at an angle of not more than 45º

COASTAL HOMES

Project Title

ACDL Trustee Ltd. D&L Kendall

Site Address

Lot 81 The Sanctuary, Mangawhai

Drawing Issue

Building Consent

Sheet Title

Plumbing and Drainage Plan

Scale	Drawn
1:100 @ A3	Marc R. Vale
Date	Checked
27/06/21	CADetailer Ltd.
Drawing no.	Revision
601	02

All dimensions to be verified on site before commencing any work or producing shop drawings. Do not scale.
The copyright of this drawing remains with CH Northland Ltd and CADetailer Ltd.

RevID	ChID	Change Name	Date
01			14/05/21
02	01	Building Consent	27/06/21

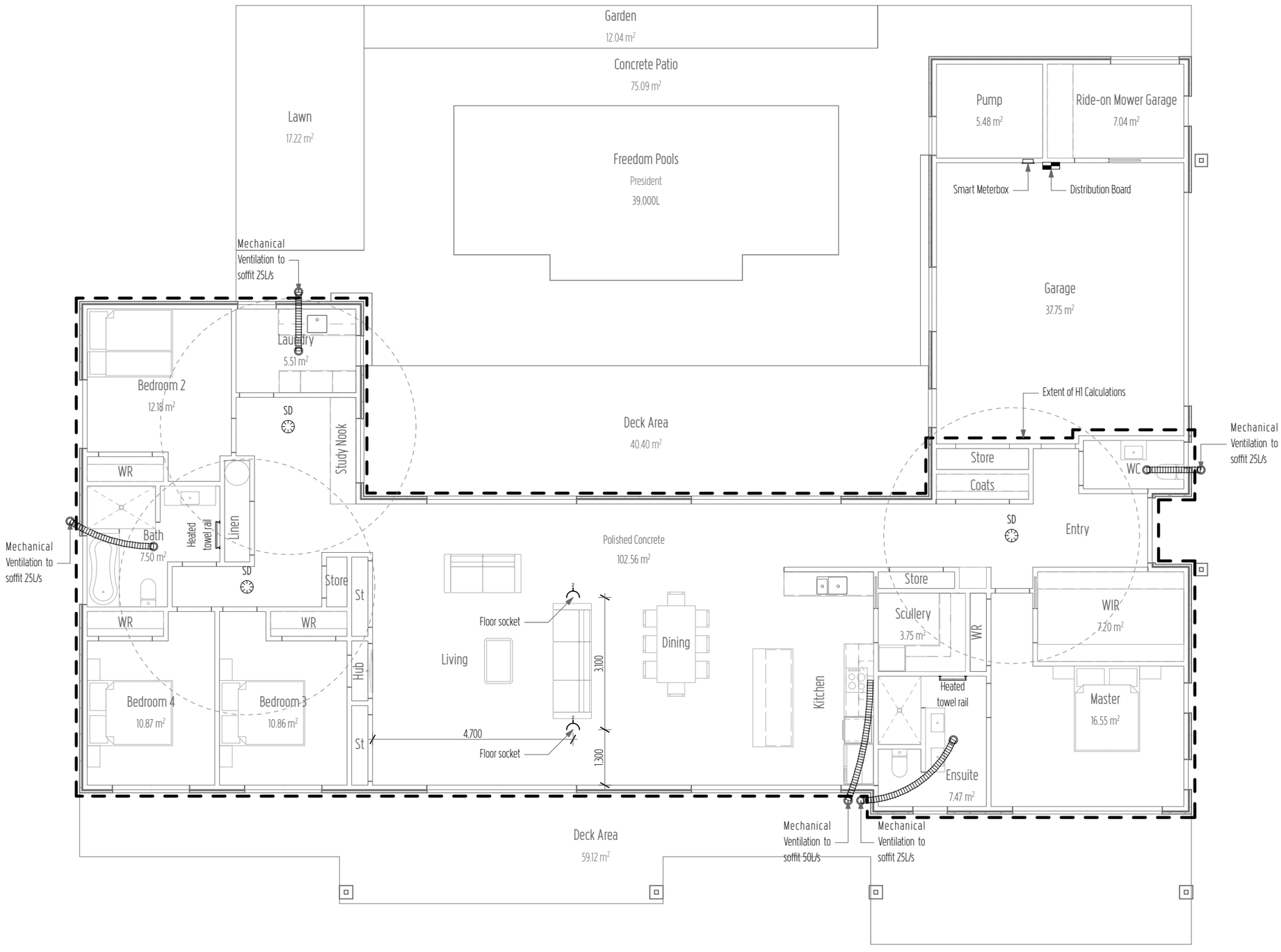

Key/Notes

SD Type 1 Domestic smoke alarm to NZBC F7/AS1

3.0m smoke alarm radius

Mechanical Ventilation to NZS 4303:1990

All electrical work to be confirmed by client before commencement of works

COASTAL HOMES

Project Title

ACDL Trustee Ltd. D&L Kendall

Site Address

Lot 81 The Sanctuary, Mangawhai

Drawing Issue

Building Consent

Sheet Title

Electrical & Ventilation Plan

Scale	Drawn
1:100 @ A3	Marc R. Vale
Date	Checked
27/06/21	CADetailer Ltd.
Drawing no.	Revision
602	02

All dimensions to be verified on site before commencing any work or producing shop drawings. Do not scale.
The copyright of this drawing remains with CH Northland Ltd and CADetailer Ltd.

RevID	ChID	Change Name	Date
01			14/05/21
02	01	Building Consent	27/06/21

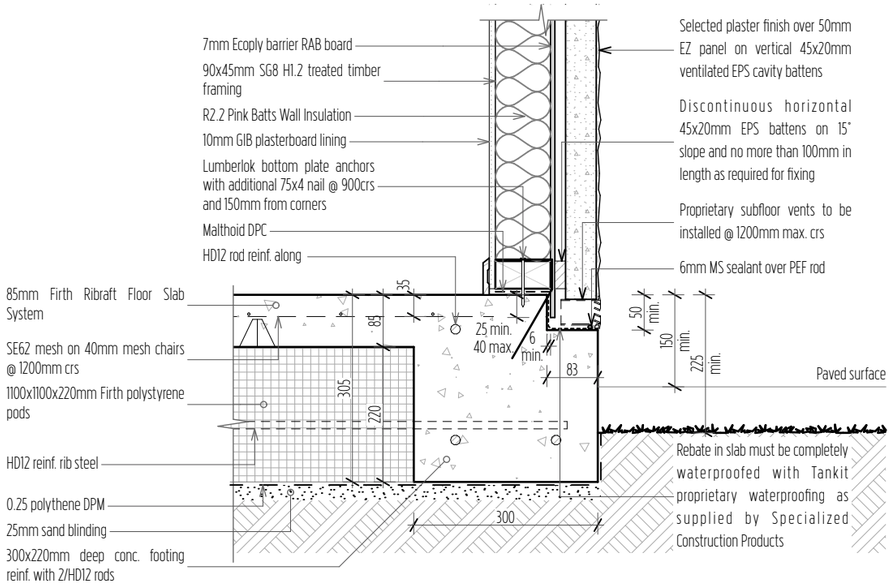

01 Ribraft Edge Beam - EZpanel

Scale 1:10

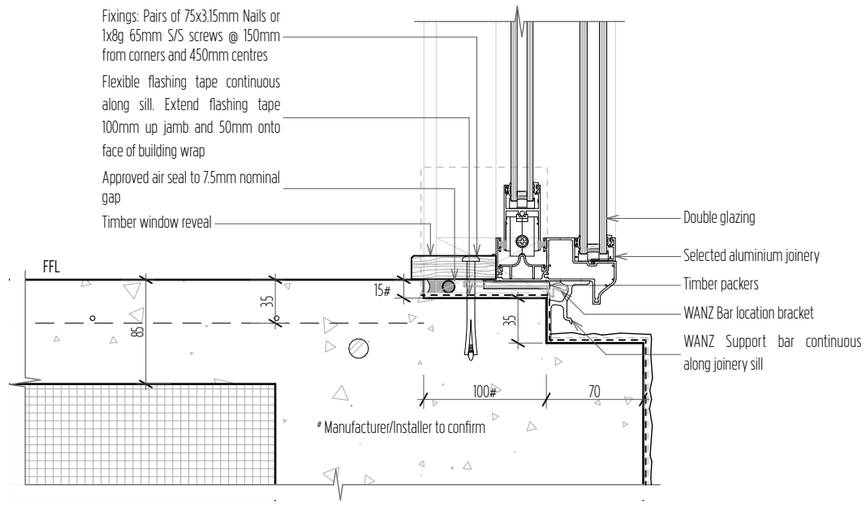

02 Joinery Sill Rebate - EZpanel

Scale 1:5

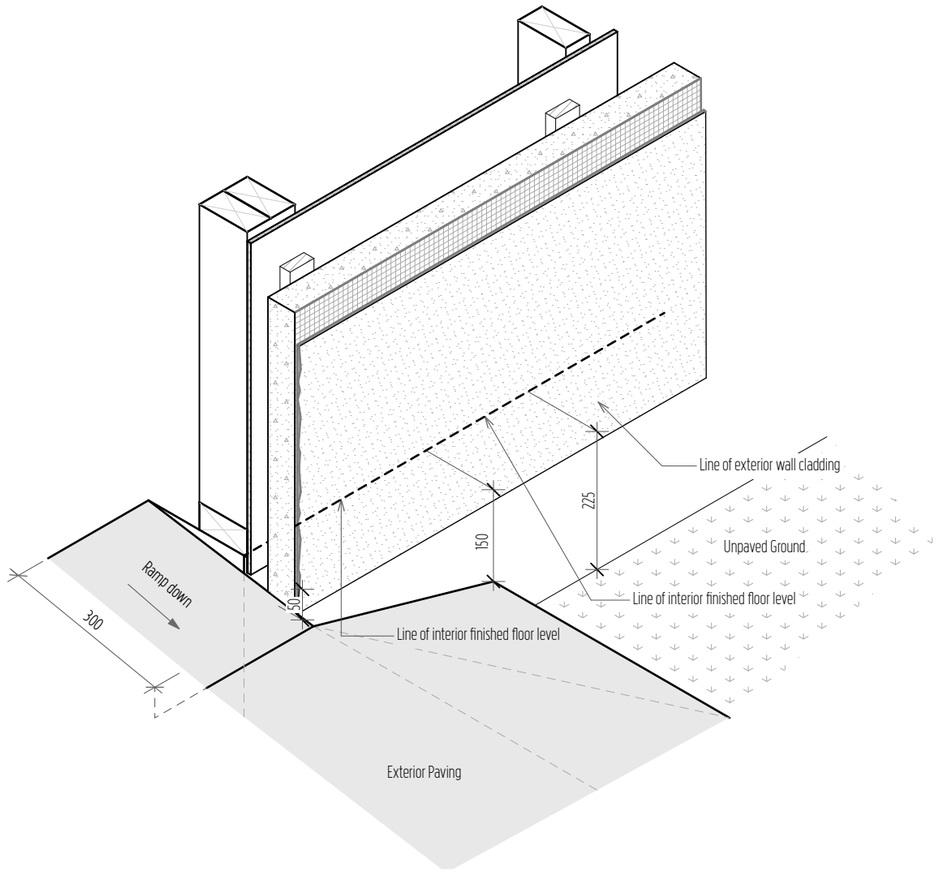

03 Garage Door Threshold - EZpanel

Scale 1:10

Key/Notes

Refer to the Geotechnical Investigation reference 21076 by Wiley Geotechnical Ltd. dated 27 May 2021 for specific site preparation details, bearing depth and capacity.

A minimum 200 mm layer of compacted hard fill is recommended to be placed for a waffle slab (i.e Rib-Raft) with the foundation being designed for expansive site class 'M – Moderate', as per AS 2870. All topsoil and fill material must be removed before foundation construction commences.

COASTAL HOMES

Project Title

ACDL Trustee Ltd. D&L Kendall

Site Address

Lot 81 The Sanctuary, Mangawhai

Drawing Issue

Building Consent

Sheet Title

Details - Foundation

Scale	Drawn
1:10, 1:5 @ A3	Marc R. Vale
Date	Checked
27/06/21	CADetailer Ltd.
Drawing no.	Revision
701	01

All dimensions to be verified on site before commencing any work or producing shop drawings. Do not scale.
The copyright of this drawing remains with CH Northland Ltd and CADetailer Ltd.

RevID	ChID	Change Name	Date
01			27/06/21

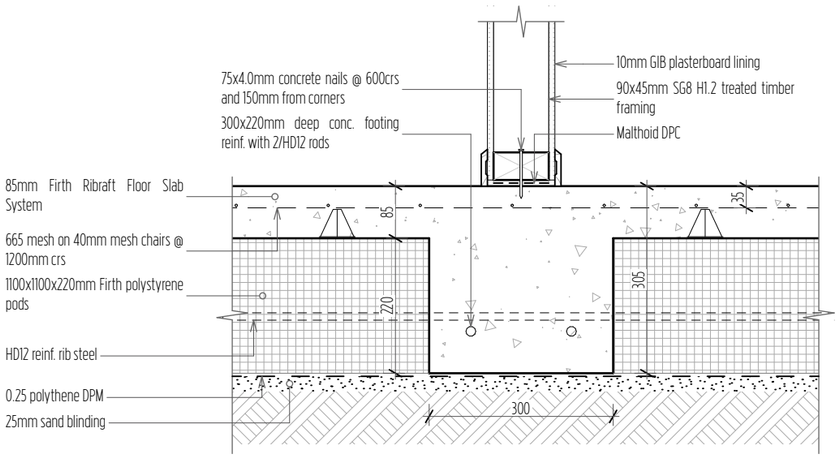

04 Internal Load-bearing Footing

Scale 1:10

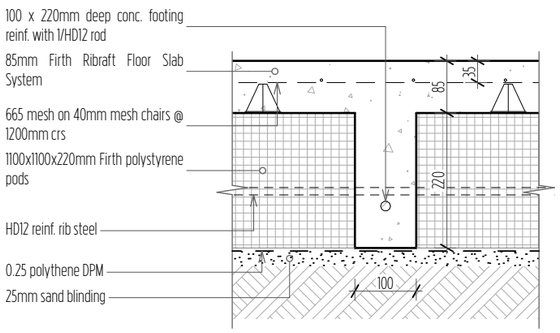

05 Internal Rib

Scale 1:10

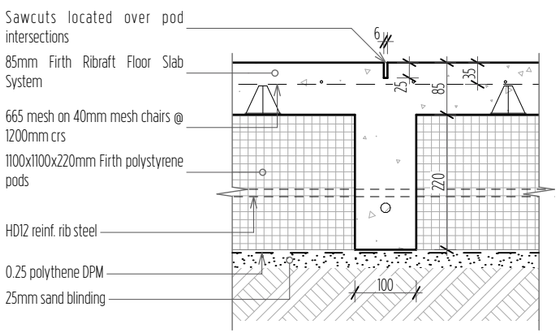

06 Sawcut

Scale 1:10

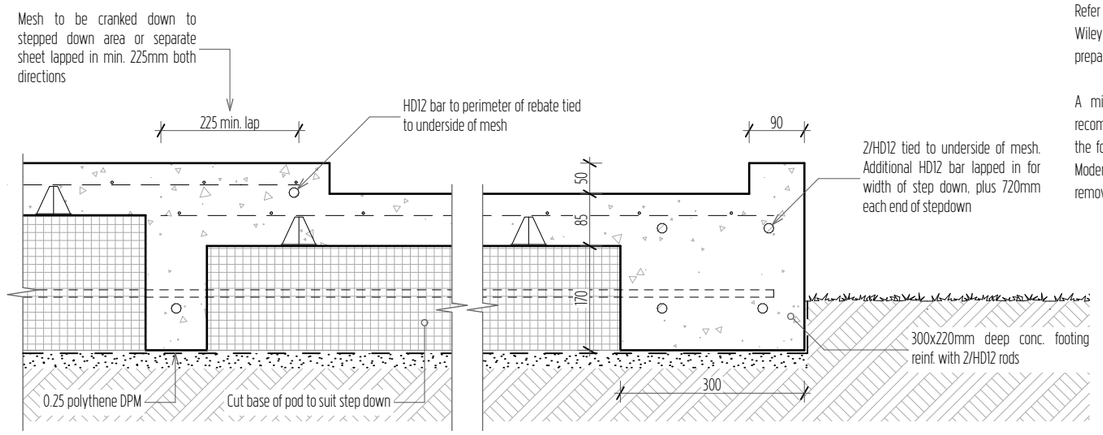

07 Shower Rebate

Scale 1:10

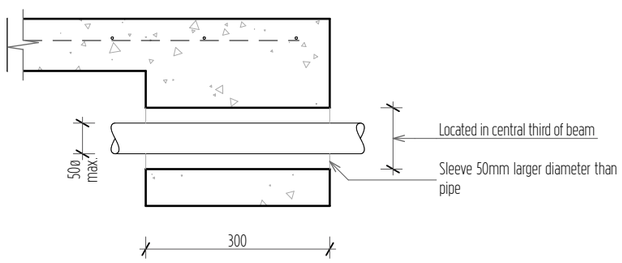

08 Horizontal Penetration through Edge Beam

Scale 1:10

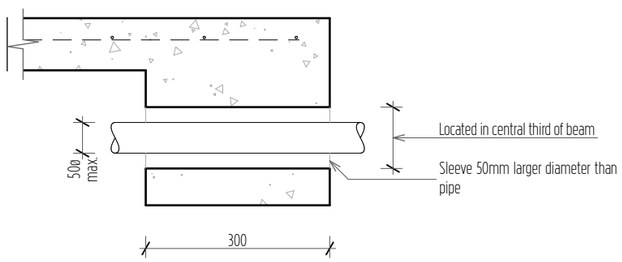

10 Vertical Penetration through Edge Beam

Scale 1:10

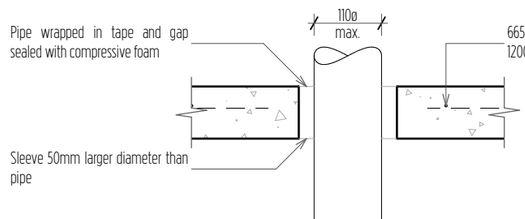

09 Small Vertical Penetration through Slab

Scale 1:10

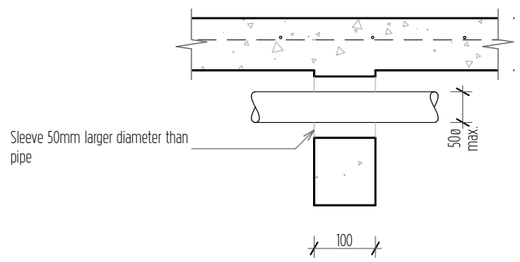

11 Horizontal Penetration through Pod Intersection

Scale 1:10



12 Large Vertical Penetration through Slab

Scale 1:10

Key/Notes

Refer to the Geotechnical Investigation reference 21076 by Wiley Geotechnical Ltd. dated 27 May 2021 for specific site preparation details, bearing depth and capacity.

A minimum 200 mm layer of compacted hard fill is recommended to be placed for a waffle slab (i.e Rib-Raft) with the foundation being designed for expansive site class 'M – Moderate', as per AS 2870. All topsoil and fill material must be removed before foundation construction commences.

COASTAL HOMES

Project Title

ACDL Trustee Ltd. D&L Kendall

Site Address

Lot 81 The Sanctuary, Mangawhai

Drawing Issue

Building Consent

Sheet Title

Details - Foundation

Scale	Drawn
1:10 @ A3	Marc R. Vale
Date	Checked
27/06/21	CADetailer Ltd.
Drawing no.	Revision
702	01

All dimensions to be verified on site before commencing any work or producing shop drawings. Do not scale.
The copyright of this drawing remains with CH Northland Ltd and CADetailer Ltd.

RevID	ChID	Change Name	Date
01			27/06/21

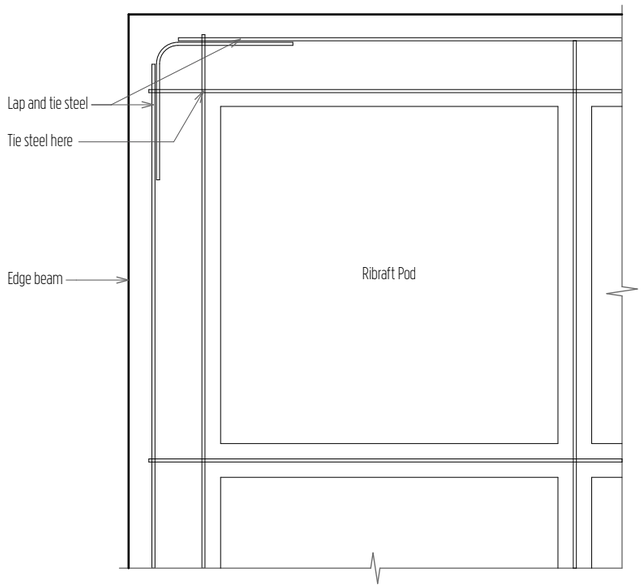

13 Re-Entrant Corner Steel

Scale 1:20

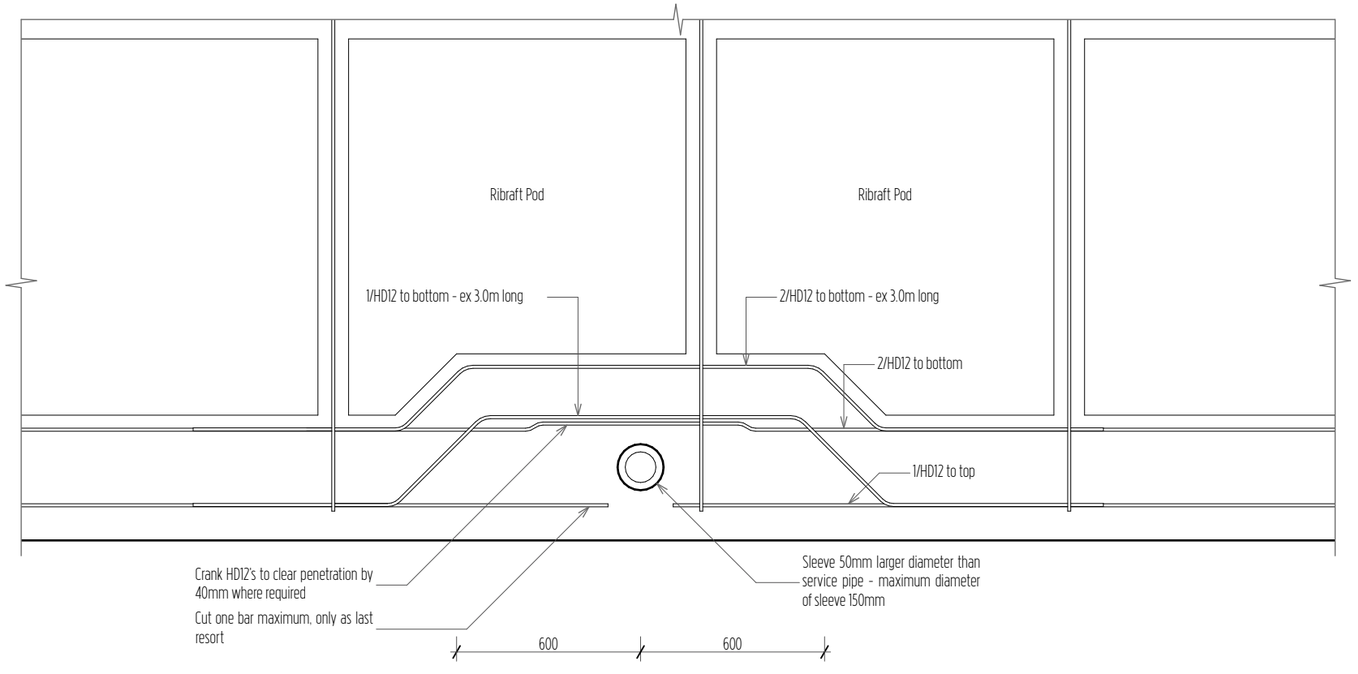

14 Vertical Penetration through Edge Beam (Plan)

Scale 1:20

Key/Notes

Refer to the Geotechnical Investigation reference 21076 by Wiley Geotechnical Ltd. dated 27 May 2021 for specific site preparation details, bearing depth and capacity.

A minimum 200 mm layer of compacted hard fill is recommended to be placed for a waffle slab (i.e Rib-Raft) with the foundation being designed for expansive site class 'M – Moderate', as per AS 2870. All topsoil and fill material must be removed before foundation construction commences.

COASTAL HOMES

Project Title

ACDL Trustee Ltd. D&L Kendall

Site Address

Lot 81 The Sanctuary, Mangawhai

Drawing Issue

Building Consent

Sheet Title

Details - Foundation

Scale	Drawn
1:20 @ A3	Marc R. Vale
Date	Checked
27/06/21	CADetailer Ltd.
Drawing no.	Revision
703	01

All dimensions to be verified on site before commencing any work or producing shop drawings. Do not scale.
The copyright of this drawing remains with CH Northland Ltd and CADetailer Ltd.

RevID	ChID	Change Name	Date
01			27/06/21

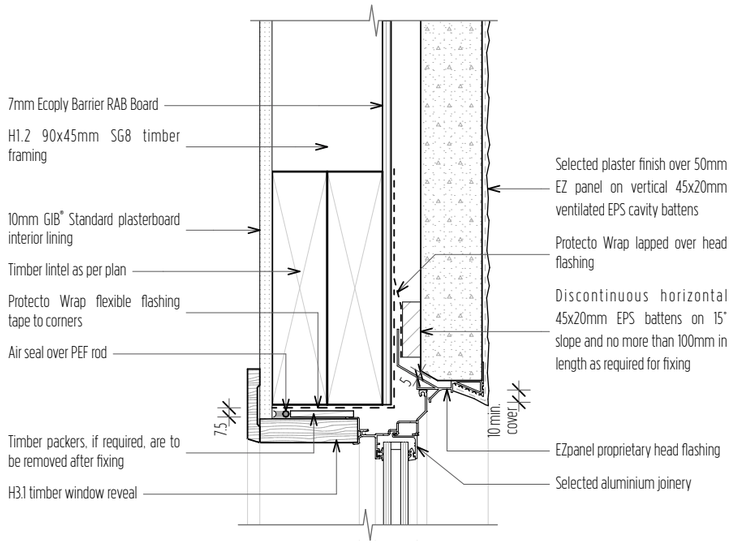

15 Window Head - EZpanel

Scale 1:5

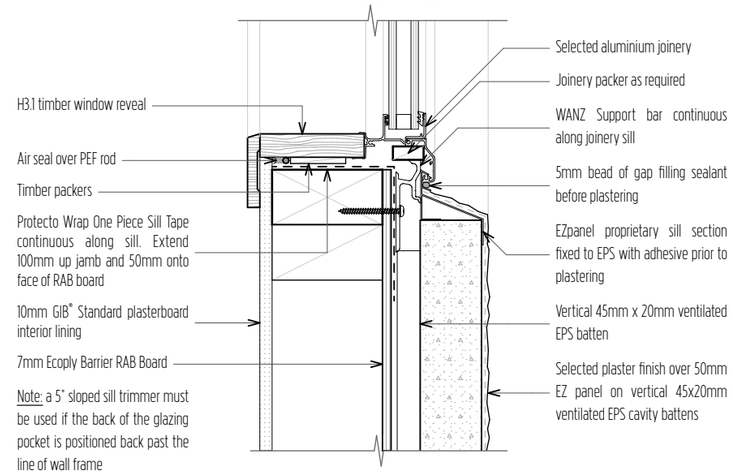

16 Window Sill - EZpanel

Scale 1:5

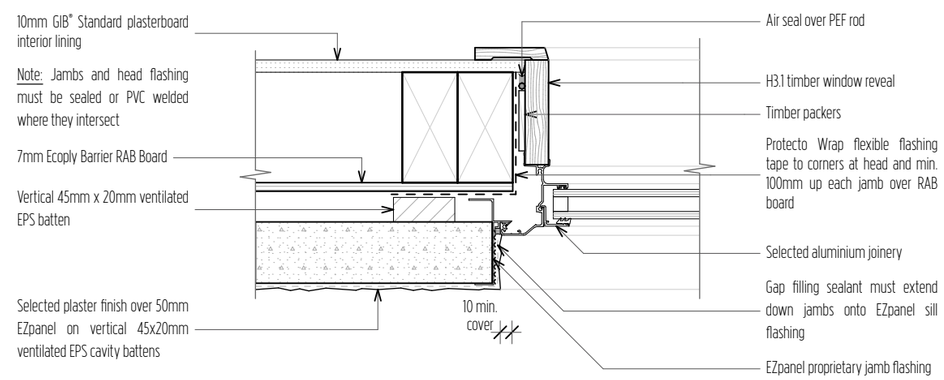

17 Window Jamb - EZpanel

Scale 1:5

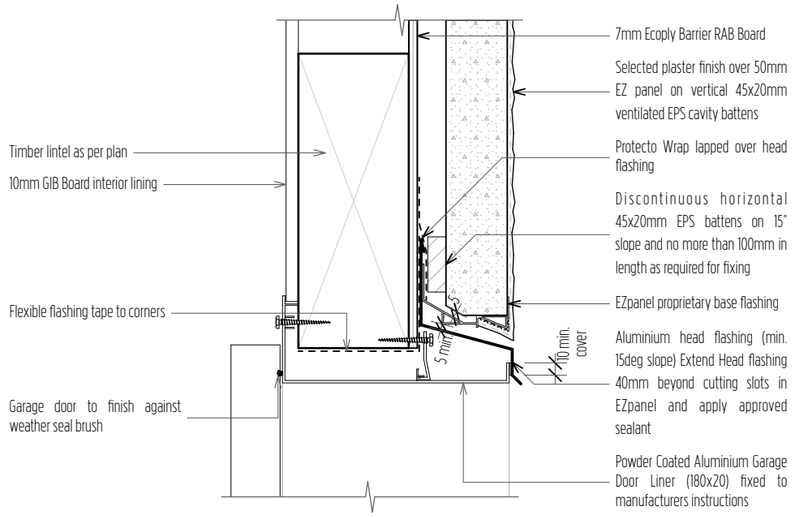

18 Garage Door Head - EZpanel

Scale 1:5

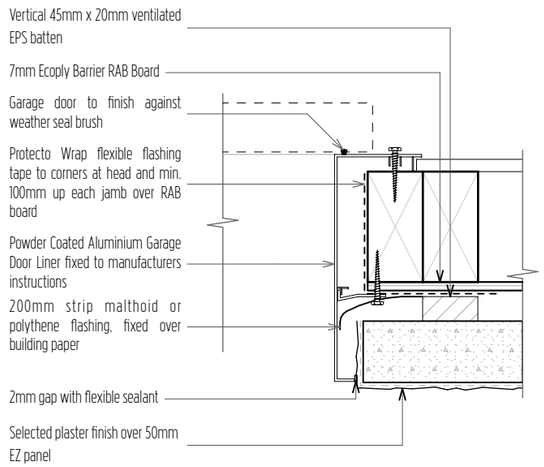

19 Garage Door Jamb - EZpanel

Scale 1:5

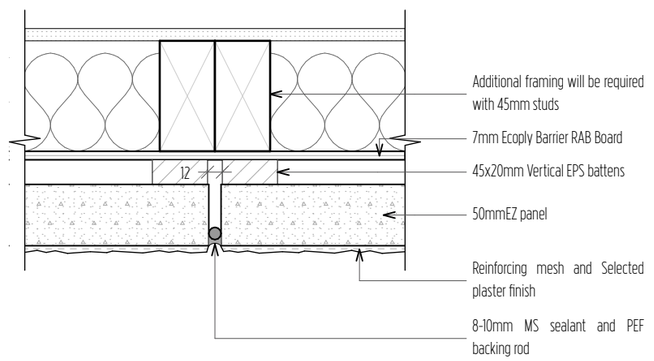

20 Vertical Control Joint - EZpanel

Scale 1:5

COASTAL HOMES

Project Title

ACDL Trustee Ltd. D&L Kendall

Site Address

Lot 81 The Sanctuary, Mangawhai

Drawing Issue

Building Consent

Sheet Title

Details - Cladding

Scale	Drawn
1:5 @ A3	Marc R. Vale
Date	Checked
27/06/21	CADetailer Ltd.
Drawing no.	Revision
704	01

All dimensions to be verified on site before commencing any work or producing shop drawings. Do not scale.
The copyright of this drawing remains with CH Northland Ltd and CADetailer Ltd.

RevID	ChID	Change Name	Date
01			27/06/21

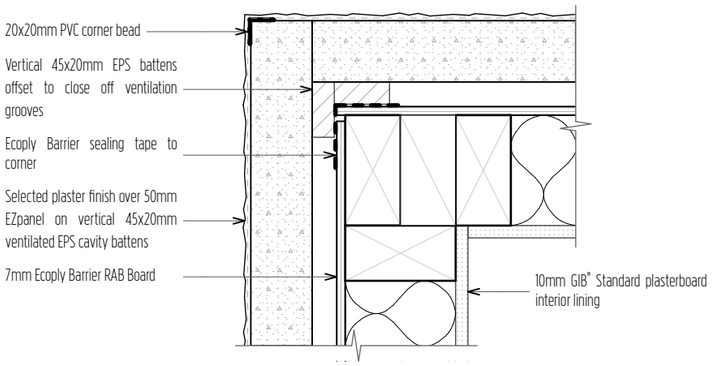

21 External Corner - EZpanel

Scale 1:5

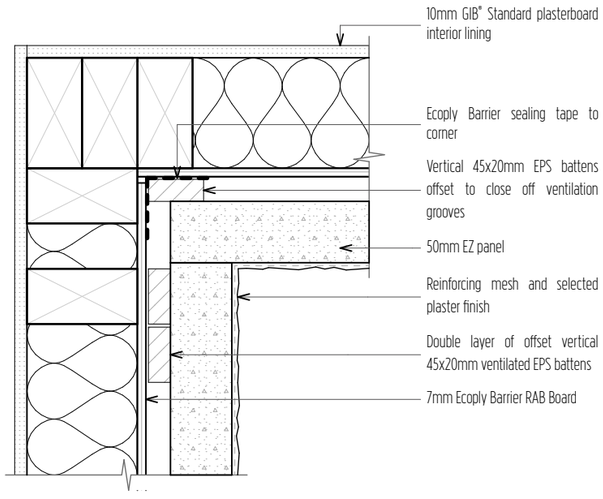

22 Internal Corner - EZpanel

Scale 1:5

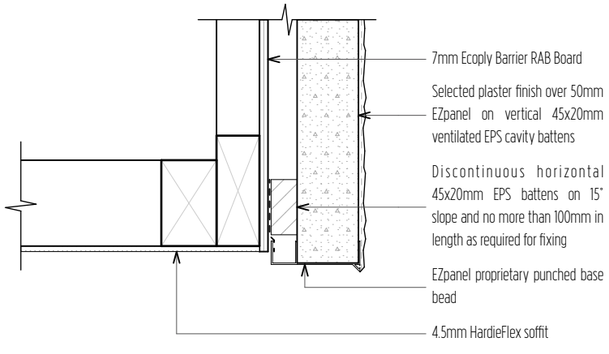

25 Soffit Overhang - EZpanel

Scale 1:5

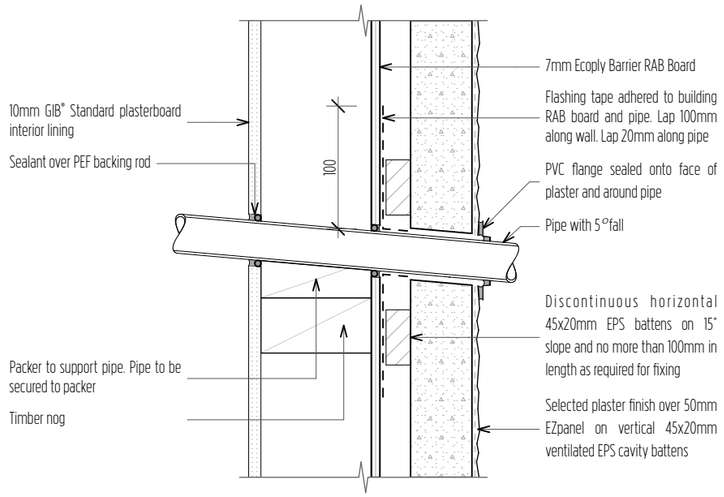

23 Pipe Penetration - EZpanel

Scale 1:5

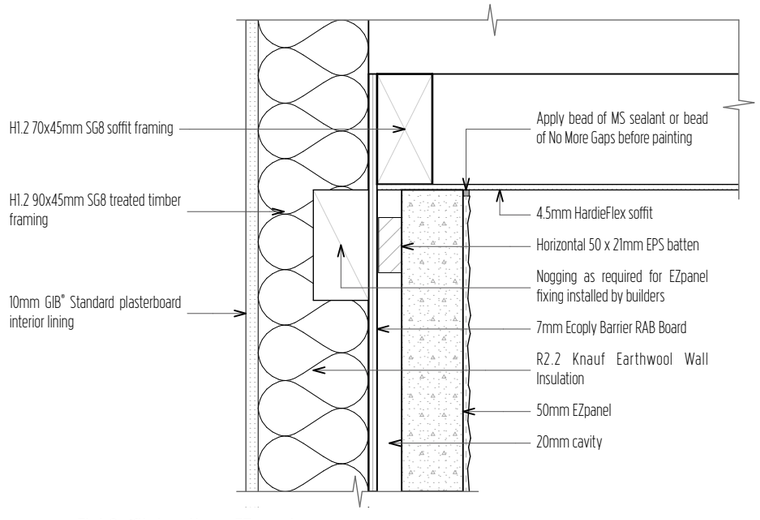

24 Flat Soffit Junction - EZpanel

Scale 1:5

COASTAL HOMES

Project Title

ACDL Trustee Ltd. D&L Kendall

Site Address

Lot 81 The Sanctuary, Mangawhai

Drawing Issue

Building Consent

Sheet Title

Details - Cladding

Scale	Drawn
1:5 @ A3	Marc R. Vale
Date	Checked
27/06/21	CADetailer Ltd.
Drawing no.	Revision
705	01

All dimensions to be verified on site before commencing any work or producing shop drawings. Do not scale.
The copyright of this drawing remains with CH Northland Ltd and CADetailer Ltd.

RevID	ChID	Change Name	Date
01			27/06/21

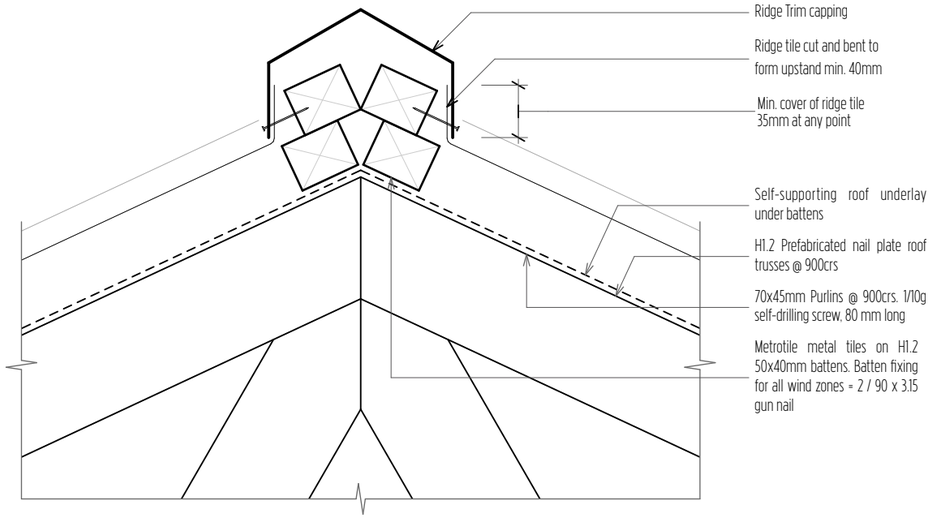

26 Truss Ridge Capping

Scale 1:5

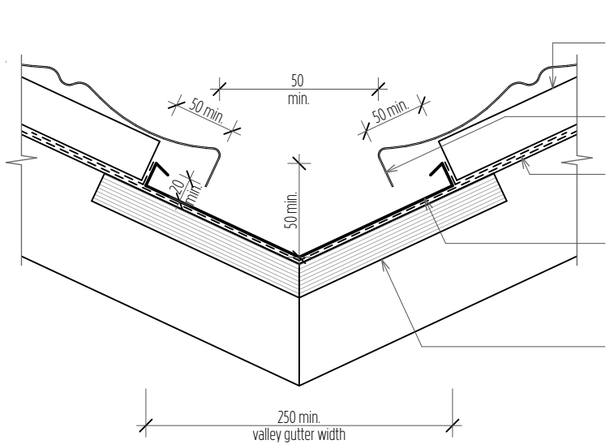

27 Valley Gutter

Scale 1:5

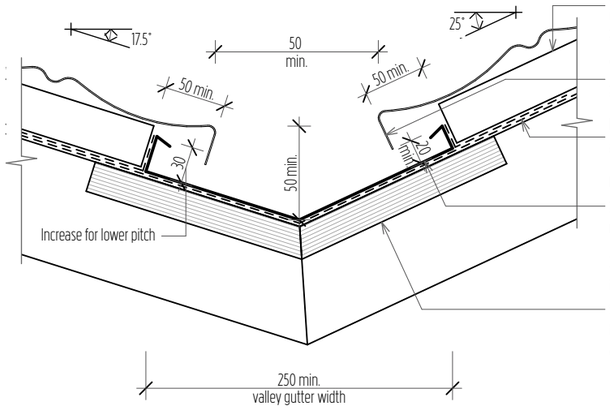

28 Valley Gutter - Varied Pitch

Scale 1:5

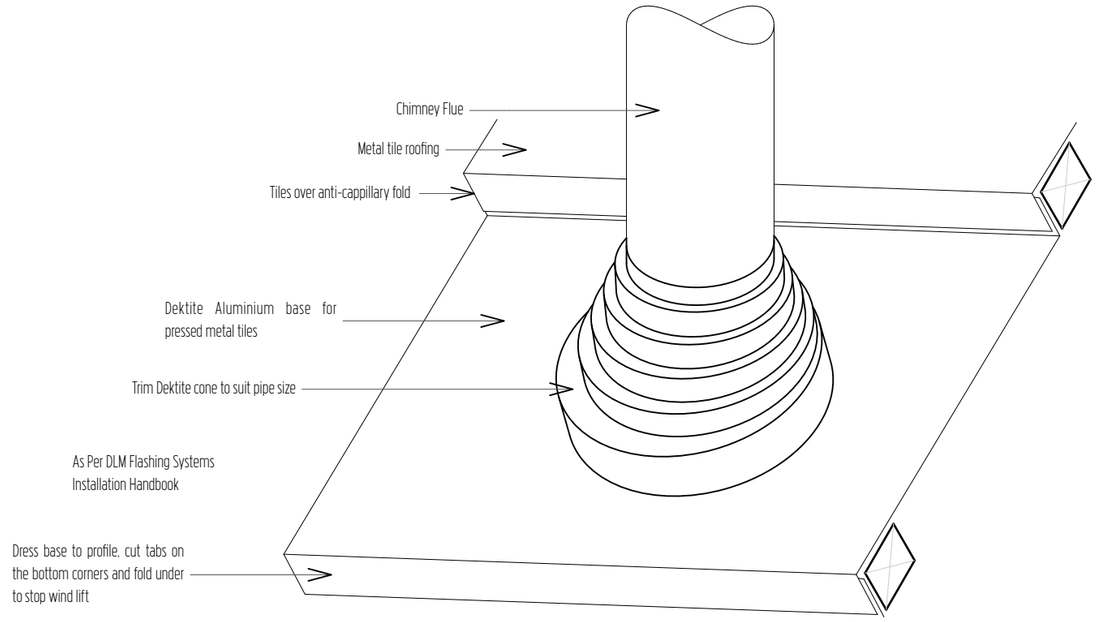

Code	Base (mm)	Pipe (mm)	Pitch
TFA 12 - 70	500 x 600	12 - 70	0 - 45 °
TFA 50 - 170	600 x 600	50 - 170	0 - 45 °
TFA 110 - 220	764 x 764	110 - 200	0 - 45 °
TFA 160 - 300	600 x 900	160 - 300	0 - 45 °
TFA 300 - 450	965 x 965	300 - 450	0 - 45 °

29 Roof Penetration

Scale 1:10

COASTAL HOMES

Project Title

ACDL Trustee Ltd. D&L Kendall

Site Address

Lot 81 The Sanctuary, Mangawhai

Drawing Issue

Building Consent

Sheet Title

Details - Roofing

Scale	Drawn
1:5, 1:10 @ A3	Marc R. Vale
Date	Checked
27/06/21	CADetailer Ltd.
Drawing no.	Revision
706	01

All dimensions to be verified on site before commencing any work or producing shop drawings. Do not scale.
The copyright of this drawing remains with CH Northland Ltd and CADetailer Ltd.

RevID	ChID	Change Name	Date
01			27/06/21

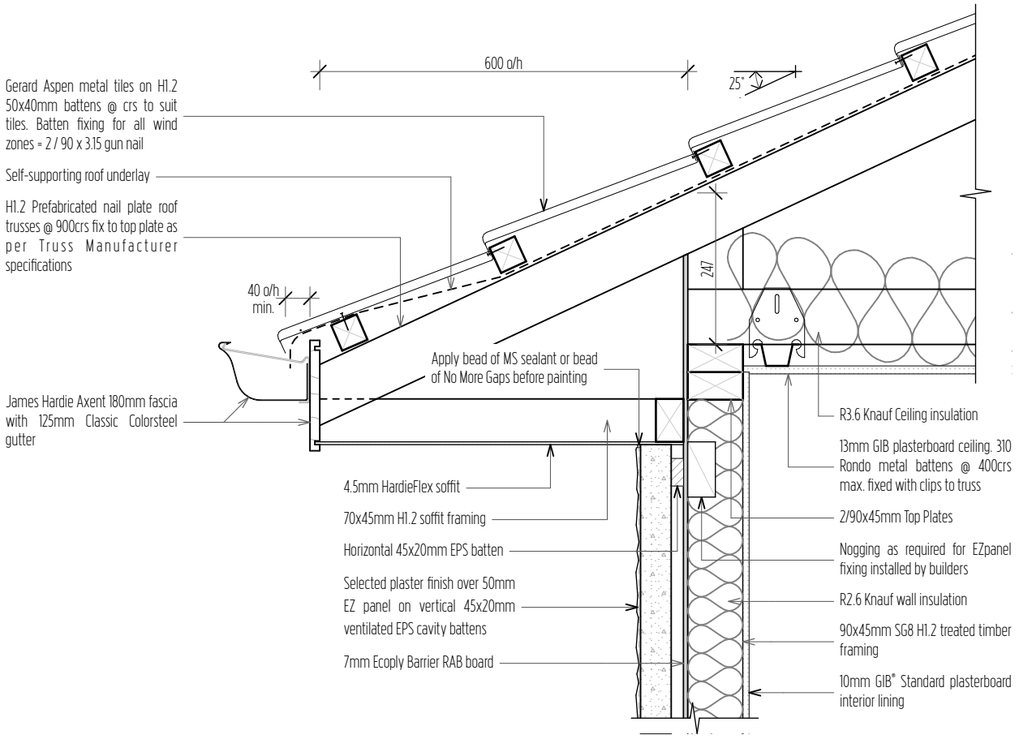

30 25deg. Metal Tile Heeled Eave - EZpanel

Scale 1:10

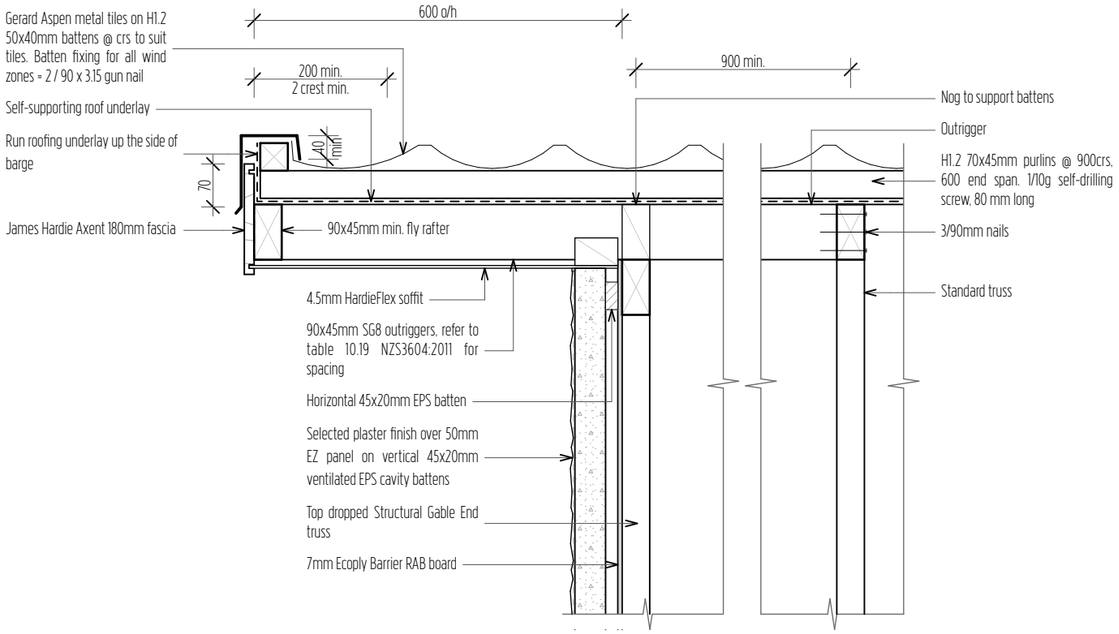

31 Metal Tile Truss Barge - EZpanel

Scale 1:10

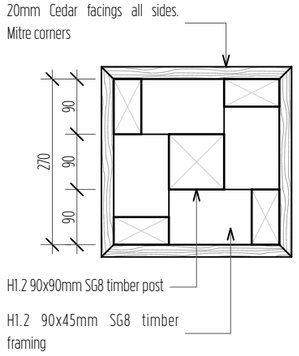

Plan Detail

32 25deg. Metal Tile Alfresco Eave - EZpanel

Scale 1:10

COASTAL HOMES

Project Title

ACDL Trustee Ltd. D&L Kendall

Site Address

Lot 81 The Sanctuary, Mangawhai

Drawing Issue

Building Consent

Sheet Title

Details - Roofing

Scale	Drawn
1:10 @ A3	Marc R. Vale
Date	Checked
27/06/21	CADetailer Ltd.
Drawing no.	Revision
707	01

All dimensions to be verified on site before commencing any work or producing shop drawings. Do not scale.
The copyright of this drawing remains with CH Northland Ltd and CADetailer Ltd.

RevID	ChID	Change Name	Date
01			27/06/21

FIXING TYPE B
4.7kN

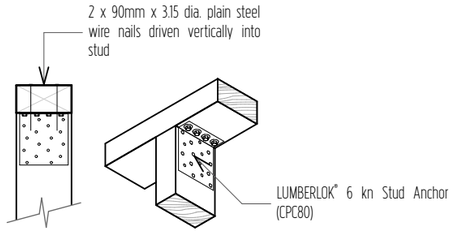

Recommended for internal wall options to avoid lining issues

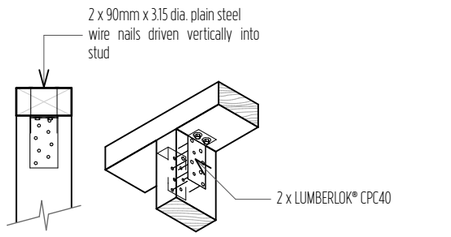

Recommended for internal wall options to avoid lining issues

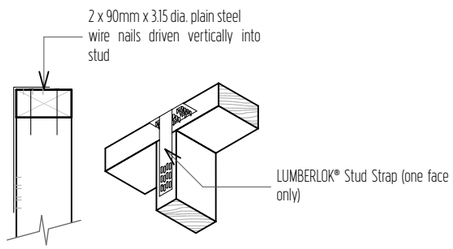

33 Lumberlok Top Plate Fixing Type B

Scale 1:10

FIXING TYPE E
1.4kN

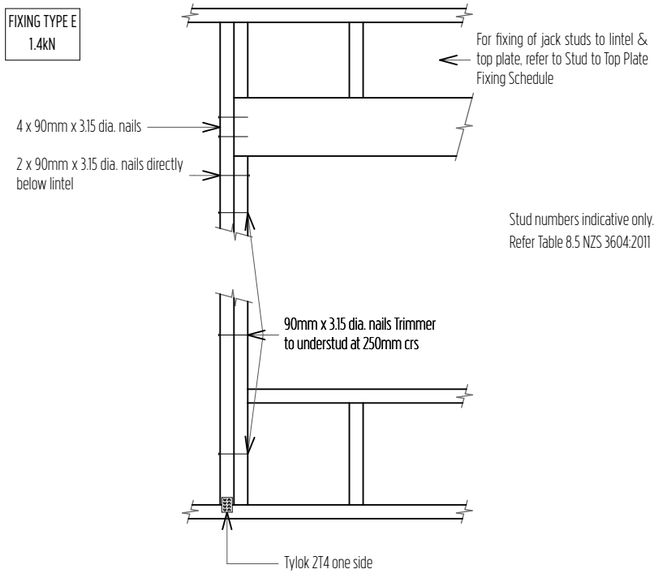

34 Lumberlok Lintel Fixing Type E

Scale 1:20

FIXING TYPE F
4.0kN

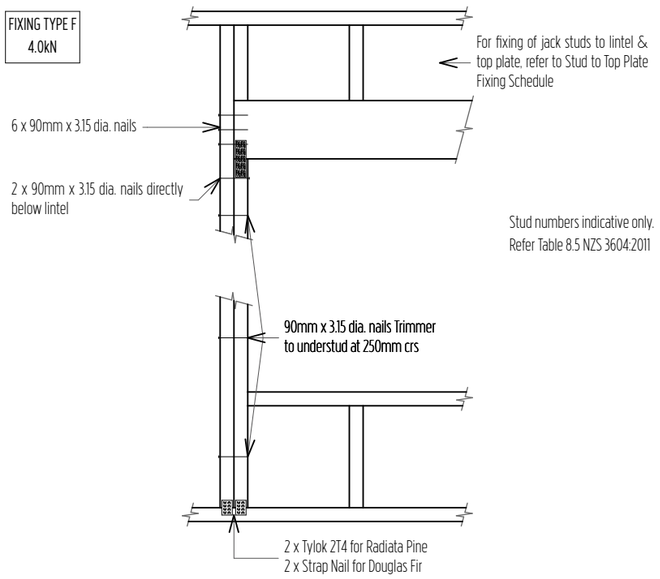

35 Lumberlok Lintel Fixing Type F

Scale 1:20

COASTAL HOMES

Project Title

ACDL Trustee Ltd. D&L Kendall

Site Address

Lot 81 The Sanctuary, Mangawhai

Drawing Issue

Building Consent

Sheet Title

Details - Fixing

Scale	Drawn
1:10, 1:20 @ A3	Marc R. Vale
Date	Checked
27/06/21	CADetailer Ltd.
Drawing no.	Revision
708	01

All dimensions to be verified on site before commencing any work or producing shop drawings. Do not scale.
The copyright of this drawing remains with CH Northland Ltd and CADetailer Ltd.

RevID	ChID	Change Name	Date
01			27/06/21

FIXING TYPE G
7.5kN

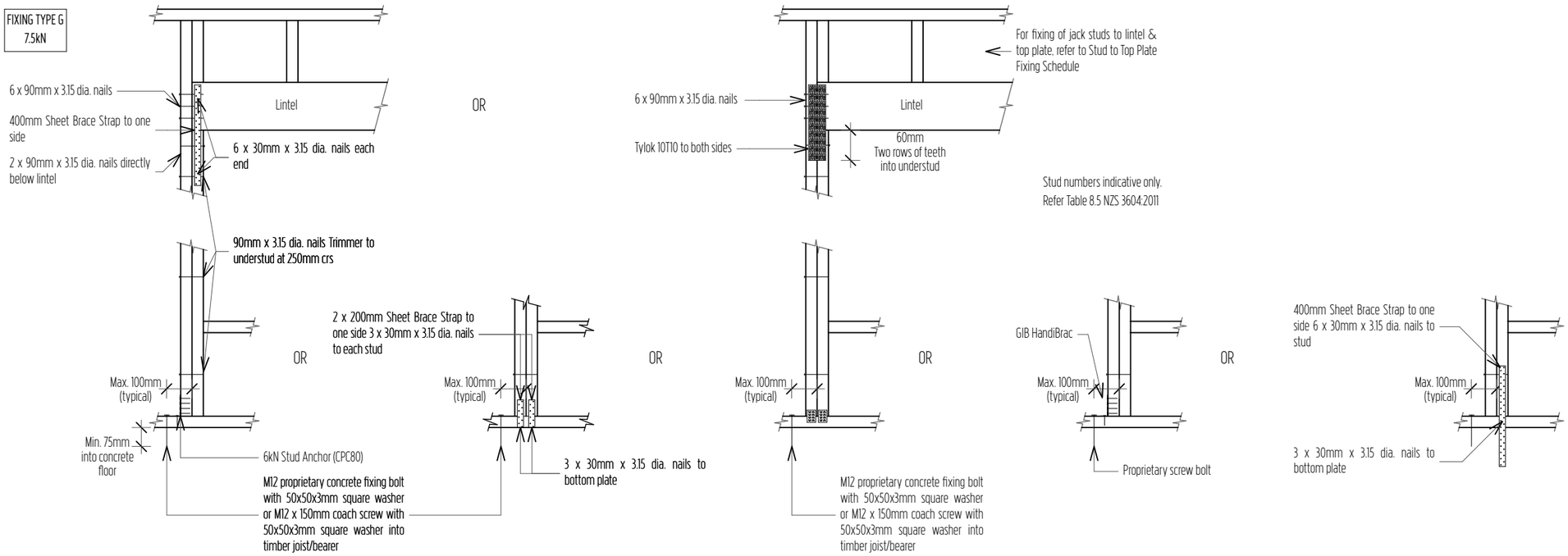

36 Lumberlok Lintel Fixing Type G

Scale 1:20

FIXING TYPE H
13.5kN

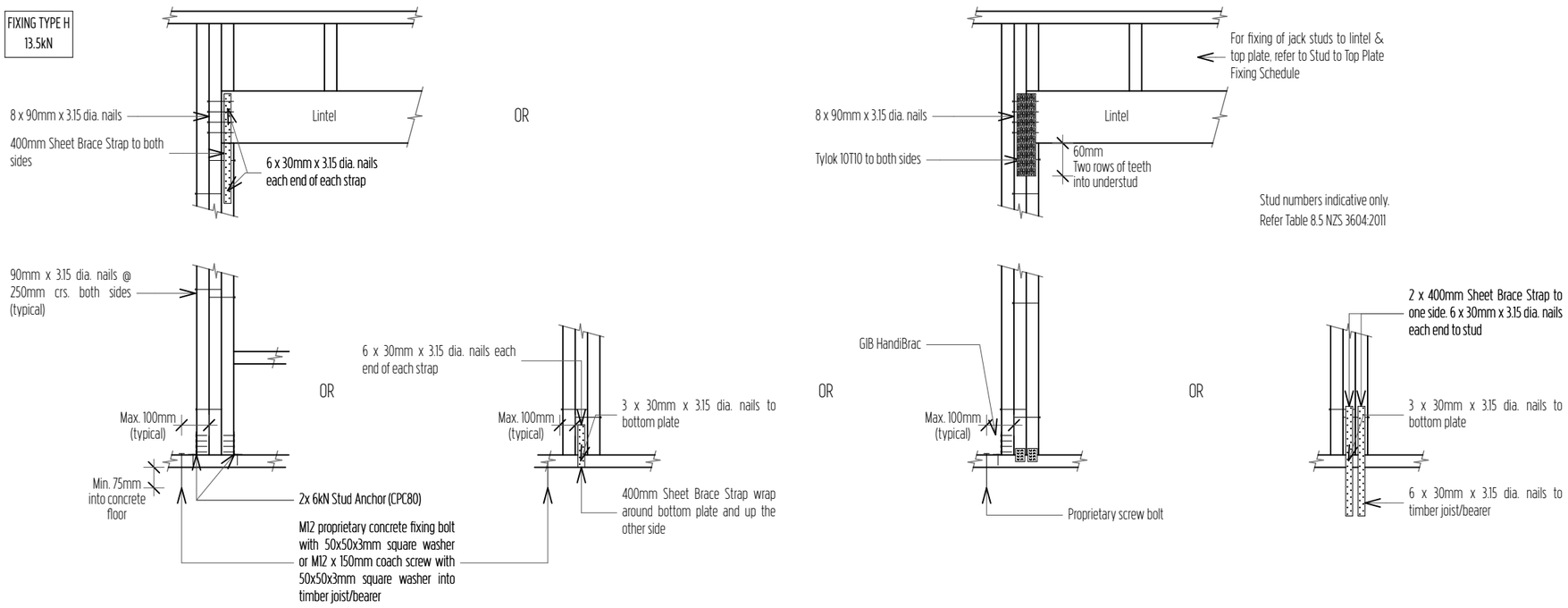

37 Lumberlok Lintel Fixing Type H

Scale 1:20

COASTAL HOMES

Project Title

ACDL Trustee Ltd. D&L Kendall

Site Address

Lot 81 The Sanctuary, Mangawhai

Drawing Issue

Building Consent

Sheet Title

Details - Fixing

Scale	Drawn
1:20 @ A3	Marc R. Vale
Date	Checked
27/06/21	CADetailer Ltd.
Drawing no.	Revision
709	01

All dimensions to be verified on site before commencing any work or producing shop drawings. Do not scale.
The copyright of this drawing remains with CH Northland Ltd and CADetailer Ltd.

RevID	ChID	Change Name	Date
01			27/06/21

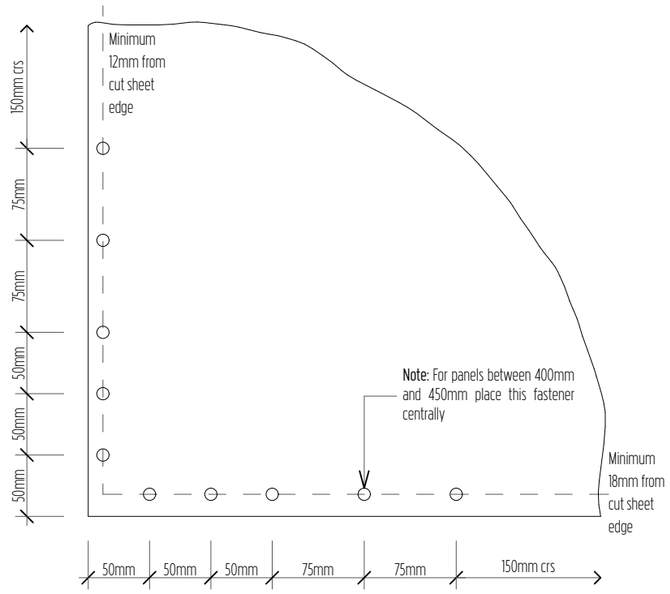

Unless stated all fastener spacings are maximums.

38 Corner Fastener Pattern

Scale 1:5

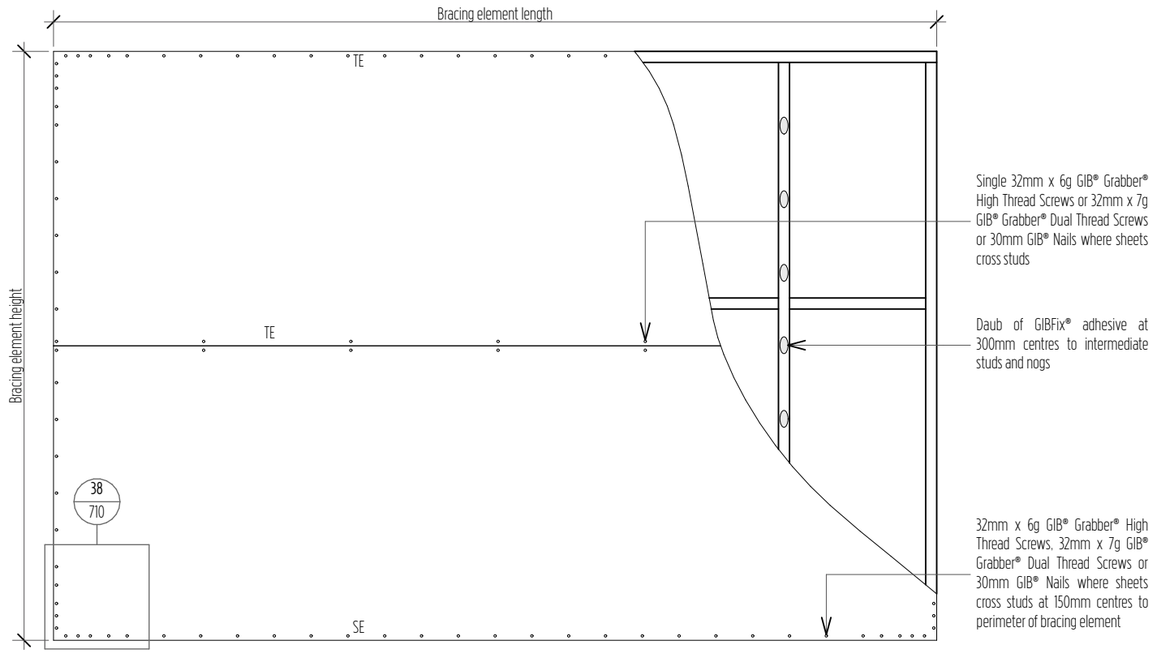

Specification code	Minimum length (m)	Lining requirement
GS1-N	0.4	Any 10mm or 13mm GIB® Standard plasterboard to one side only

39 GS1-N Horizontal Fixing

Scale 1:25

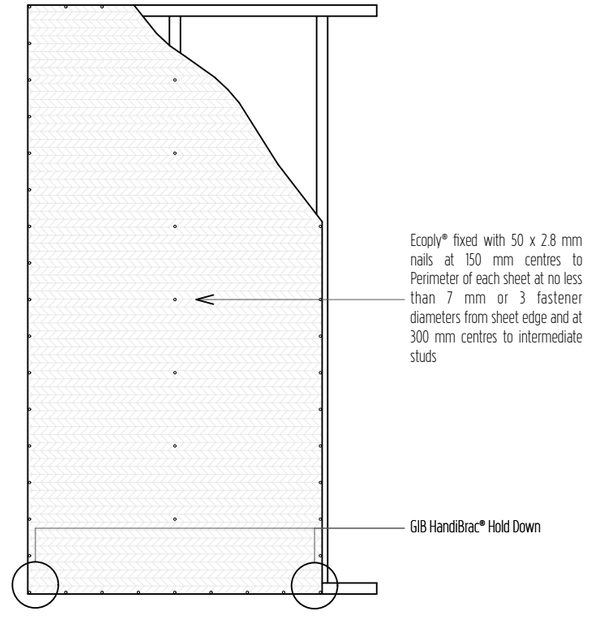

Specification code	Minimum length (m)	Lining requirement
EP1_0.4 EP1_0.6 EP1_1.2	0.4 0.6 1.2	Ecoply one side

40 EP1 Fixing

Scale 1:25

Key/Notes

TE	Tapered Edge
SE	Square Edge

COASTAL HOMES

Project Title

ACDL Trustee Ltd. D&L Kendall

Site Address

Lot 81 The Sanctuary, Mangawhai

Drawing Issue

Building Consent

Sheet Title

Details - Bracing

Scale	Drawn
1:5, 1:25 @ A3	Marc R. Vale
Date	Checked
27/06/21	CADetailer Ltd.
Drawing no.	Revision
710	01

All dimensions to be verified on site before commencing any work or producing shop drawings. Do not scale.
The copyright of this drawing remains with CH Northland Ltd and CADetailer Ltd.

RevID	ChID	Change Name	Date
01			27/06/21

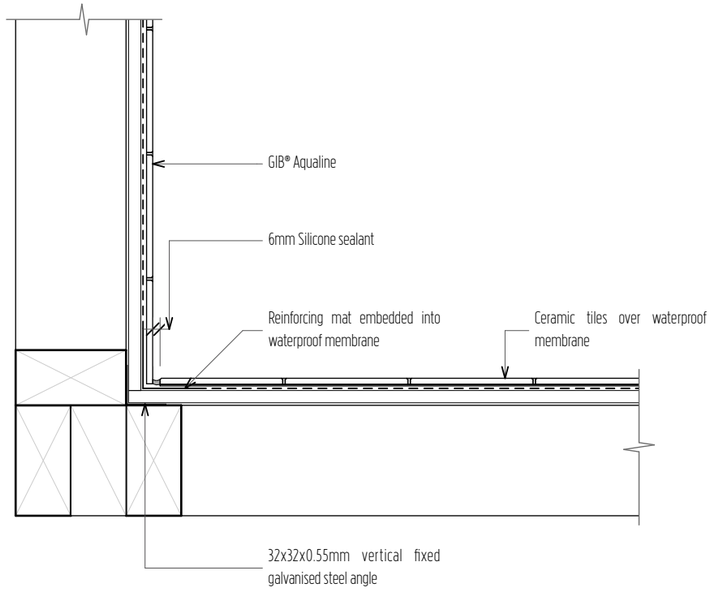

41 Shower Corner Detail - Plan

Scale 1:5

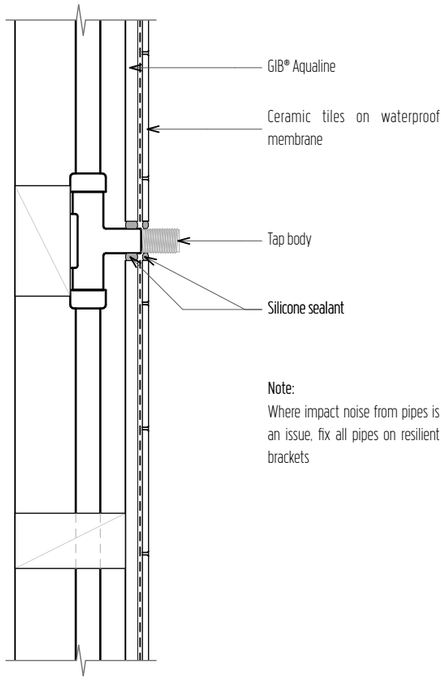

42 Tiled Penetration Detail

Scale 1:5

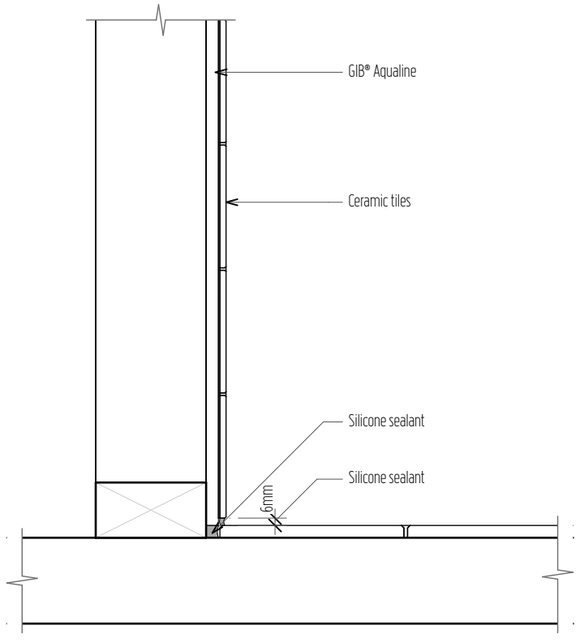

43 Tiled Wall/Floor Detail

Scale 1:5

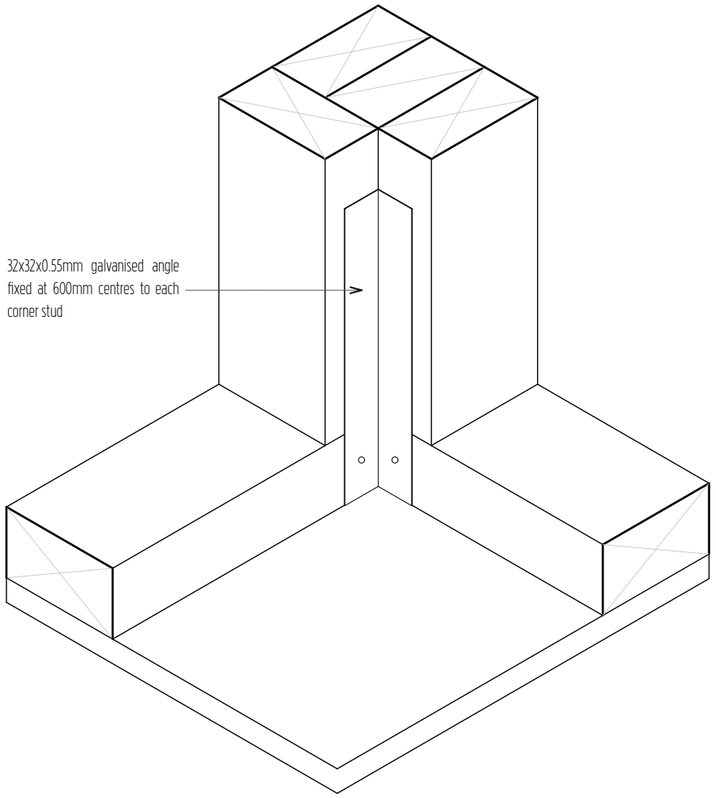

44 Shower Corner Angle Detail

Scale 1:5

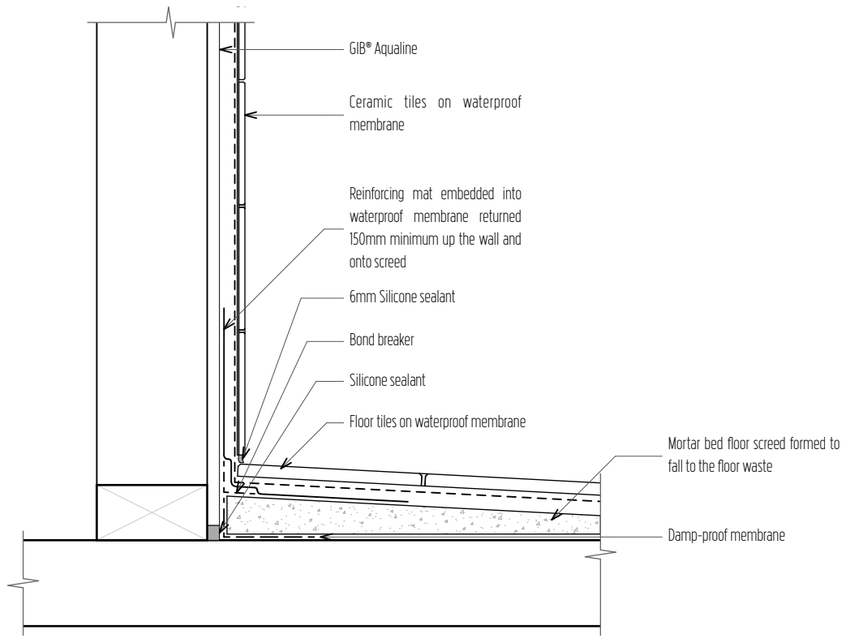

45 Shower - Tiled Walls and Base

Scale 1:5

COASTAL HOMES

Project Title

ACDL Trustee Ltd. D&L Kendall

Site Address

Lot 81 The Sanctuary, Mangawhai

Drawing Issue

Building Consent

Sheet Title

Details - GIB

Scale	Drawn
1:5 @ A3	Marc R. Vale
Date	Checked
27/06/21	CADetailer Ltd.
Drawing no.	Revision
711	01

All dimensions to be verified on site before commencing any work or producing shop drawings. Do not scale.
The copyright of this drawing remains with CH Northland Ltd and CADetailer Ltd.

RevID	ChID	Change Name	Date
01			27/06/21

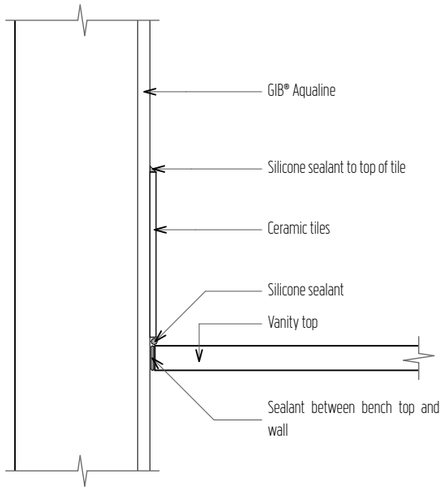

46 Vanity Top/Wall Detail

Scale 1:5

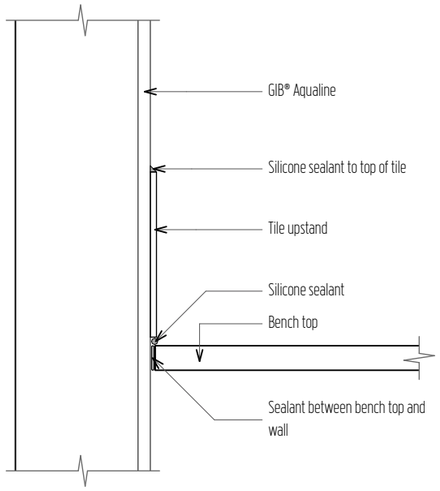

47 Kitchen and Laundry Bench Top/Wall Detail

Scale 1:5

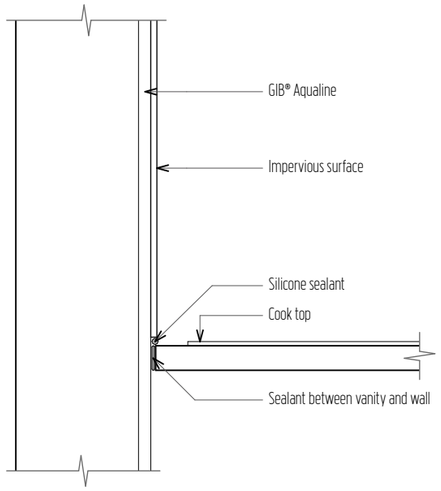

48 Cook Top/Wall Detail

Scale 1:5

COASTAL HOMES

Project Title

ACDL Trustee Ltd. D&L Kendall

Site Address

Lot 81 The Sanctuary, Mangawhai

Drawing Issue

Building Consent

Sheet Title

Details - GIB

Scale	Drawn
1:5 @ A3	Marc R. Vale
Date	Checked
27/06/21	CADetailer Ltd.
Drawing no.	Revision
712	01

All dimensions to be verified on site before commencing any work or producing shop drawings. Do not scale.
The copyright of this drawing remains with CH Northland Ltd and CADetailer Ltd.

RevID	ChID	Change Name	Date
01			27/06/21

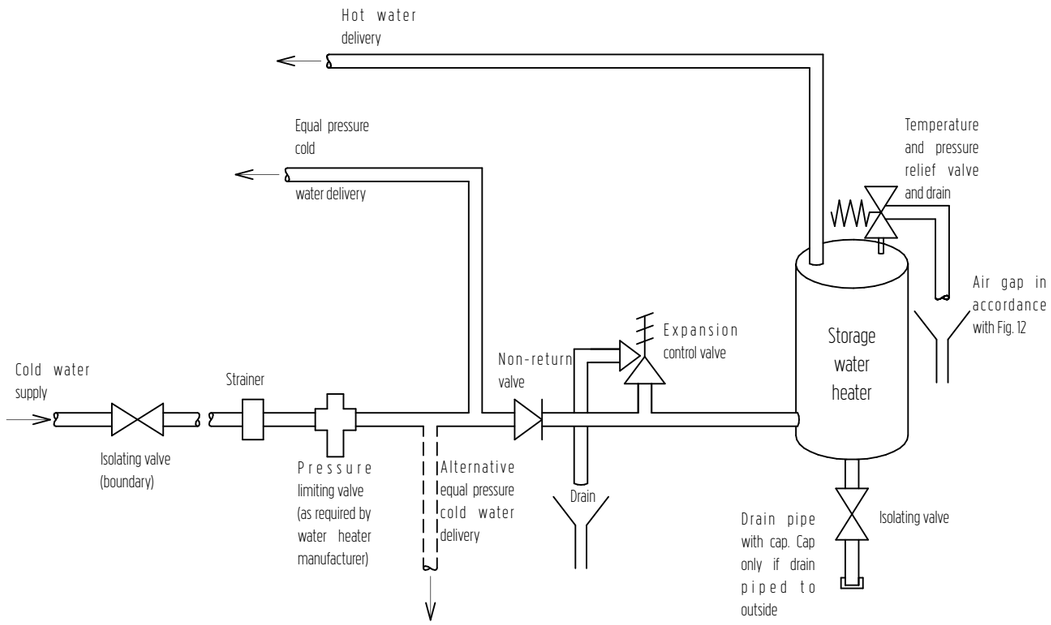

49 G12/AS1 Figure 8 Mains Pressure Storage Water Heater System (unvented)

Scale 1:5

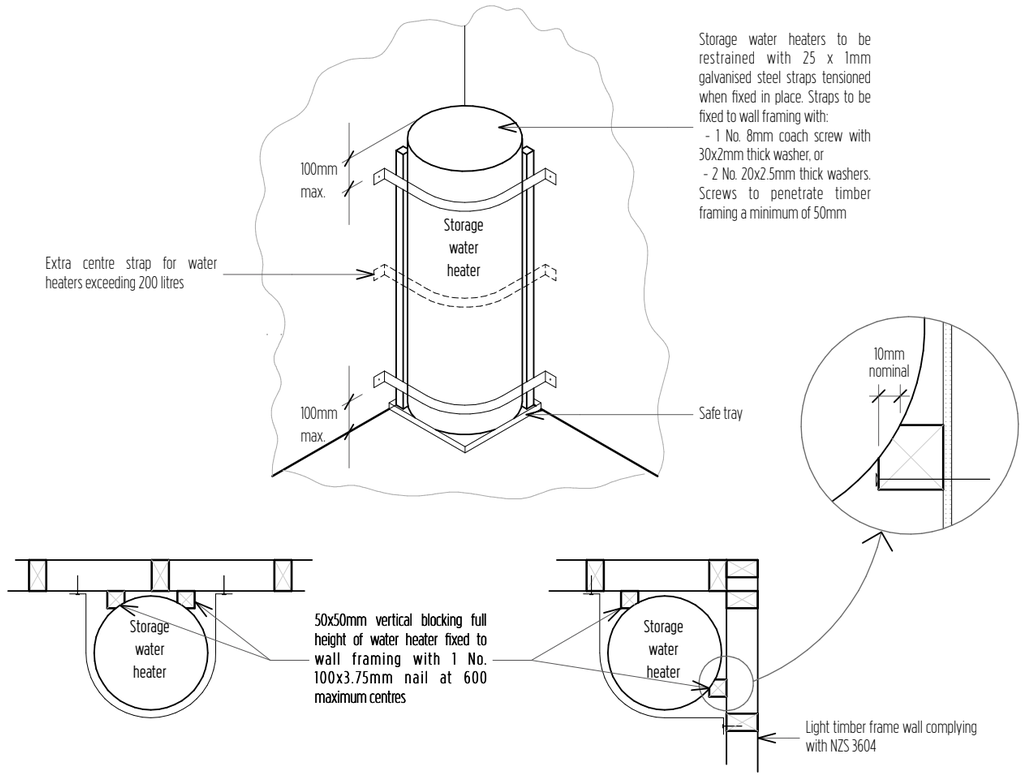

50 G12/AS1 Figure 14 Seismic Restraint of Storage Water Heaters 90 – 360 litres

Scale 1:5

COASTAL HOMES

Project Title

ACDL Trustee Ltd. D&L Kendall

Site Address

Lot 81 The Sanctuary, Mangawhai

Drawing Issue

Building Consent

Sheet Title

Details - HWC

Scale	Drawn
1:5 @ A3	Marc R. Vale
Date	Checked
27/06/21	CADetailer Ltd.
Drawing no.	Revision
713	01

All dimensions to be verified on site before commencing any work or producing shop drawings. Do not scale.
The copyright of this drawing remains with CH Northland Ltd and CADetailer Ltd.

RevID	ChID	Change Name	Date
01			27/06/21

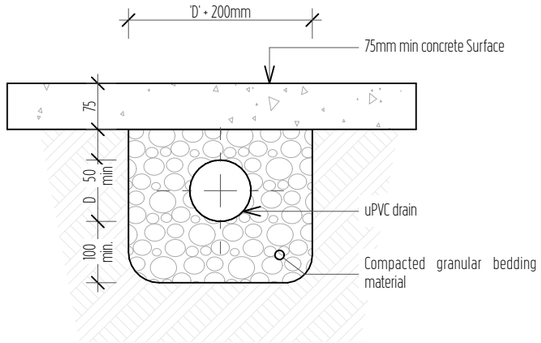

cover >125mm

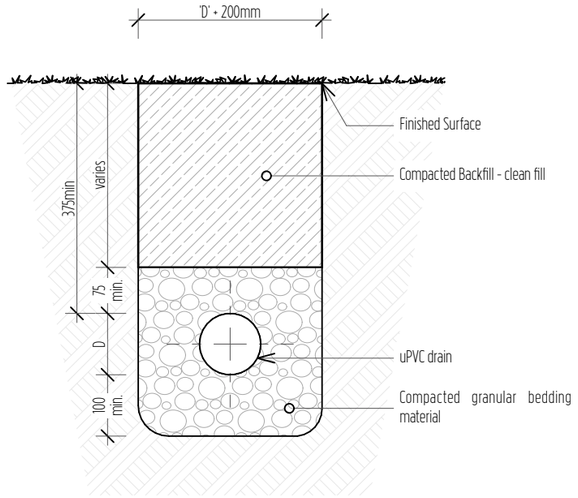

cover > 375mm

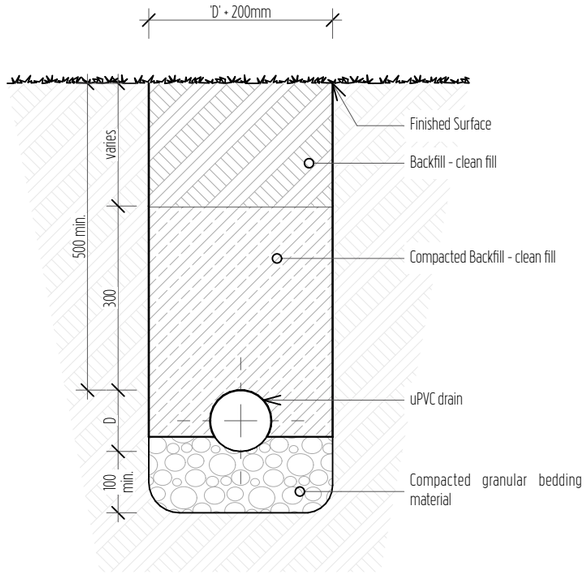

cover > 500mm

52 Drainage Bedding to AS/NZS3500.2

Scale 1:10

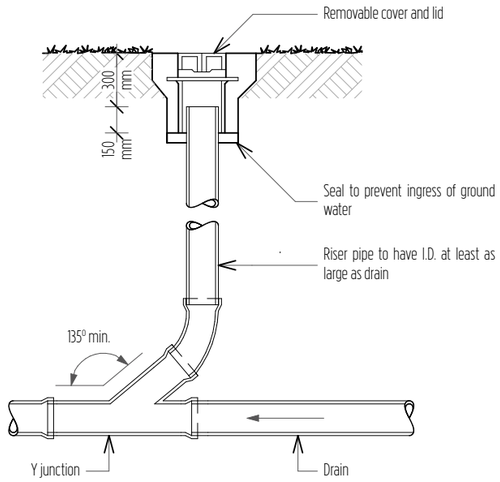

51 E1/ES1 Figure 10 Typical Rodding Point

Scale 1:20

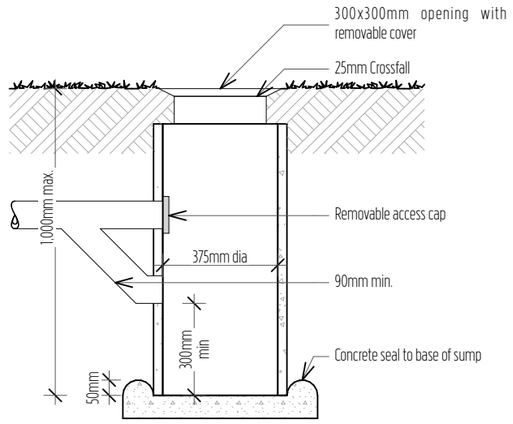

53 E1/AS1 Figure 8 Type-one Surface Water Sump

Scale 1:20

COASTAL HOMES

Project Title

ACDL Trustee Ltd. D&L Kendall

Site Address

Lot 81 The Sanctuary, Mangawhai

Drawing Issue

Building Consent

Sheet Title

Details - Drainage

Scale	Drawn
1:20, 1:10 @ A3	Marc R. Vale
Date	Checked
27/06/21	CADetailer Ltd.
Drawing no.	Revision
714	01

All dimensions to be verified on site before commencing any work or producing shop drawings. Do not scale.
The copyright of this drawing remains with CH Northland Ltd and CADetailer Ltd.

RevID	ChID	Change Name	Date
01			27/06/21

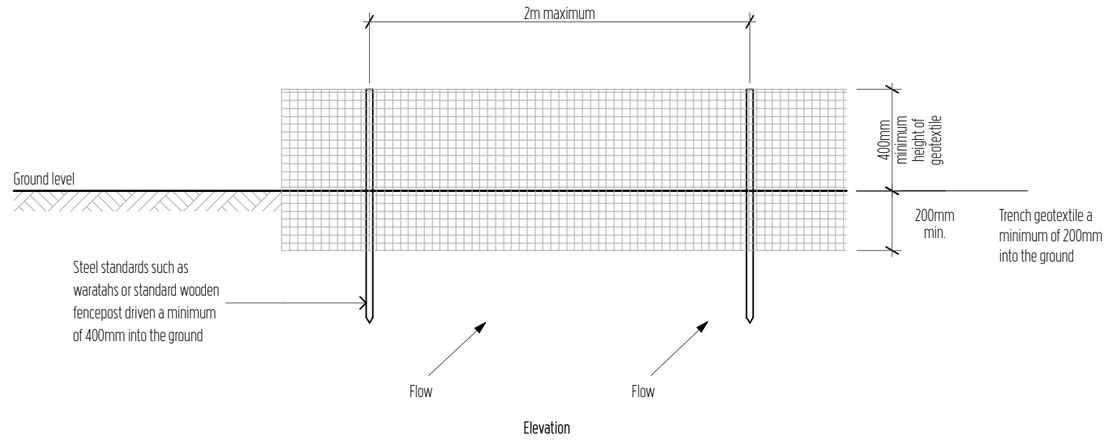

Elevation

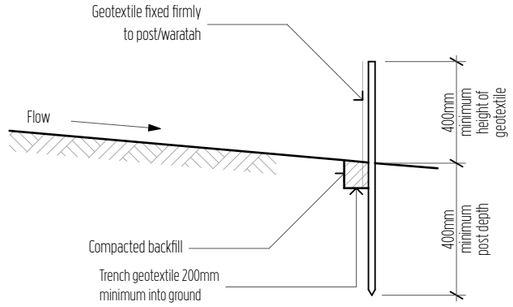

Cross Section

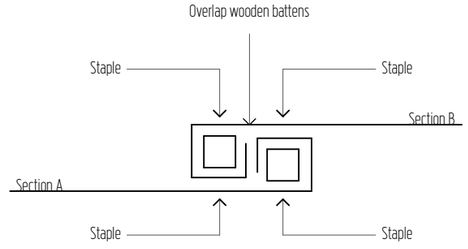

Standard Fabric Joint

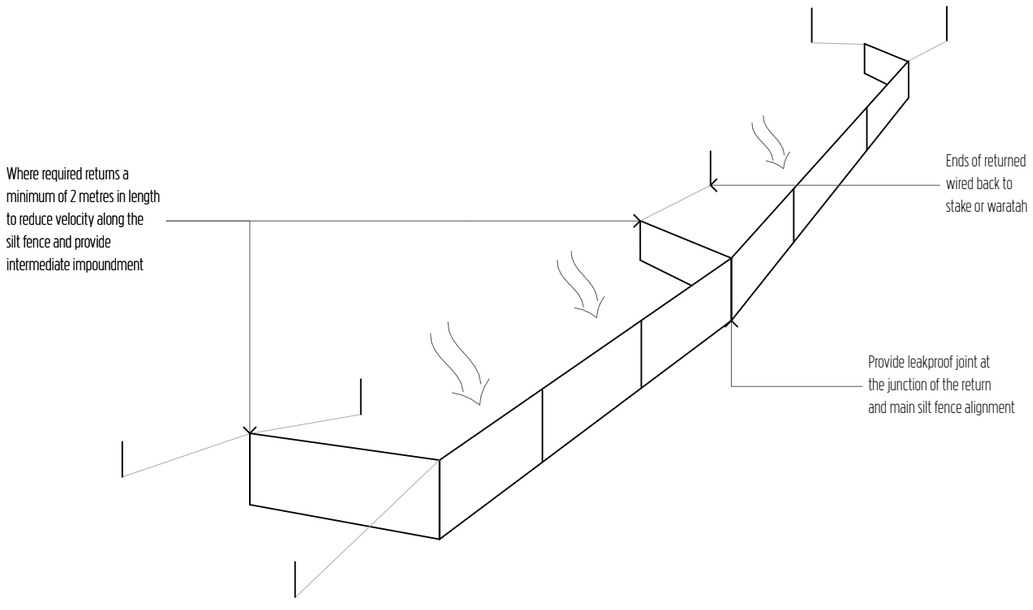

Perspective View

54 Silt Fence / Sediment Control

Scale 1:30

Key/Notes

Sediment and runoff control shall be designed and installed by the licensed building practitioner prior to or during earthworks for the project. The sediment controls shall be installed in accordance with the requirements of the acceptable guidelines for erosion and sediment control are documented in the ARC publication TP90.

Sediment and erosion control measures shall be the responsibility of the main contractor and shall be regularly checked and maintained as required during construction. Refer to earthworks plan for sediment control locations.

COASTAL HOMES

Project Title

ACDL Trustee Ltd. D&L Kendall

Site Address

Lot 81 The Sanctuary, Mangawhai

Drawing Issue

Building Consent

Sheet Title

Details - Sediment Control

Scale	Drawn
1:30 @ A3	Marc R. Vale
Date	Checked
27/06/21	CADetailer Ltd.
Drawing no.	Revision
715	01

All dimensions to be verified on site before commencing any work or producing shop drawings. Do not scale.
The copyright of this drawing remains with CH Northland Ltd and CADetailer Ltd.

RevID	ChID	Change Name	Date
01			27/06/21

Door / Window ID	D0.01	D0.02	D0.03	D0.04	D0.05	D0.06	D0.07
Quantity	1	1	1	1	1	1	1
2D Elevation (Unit Size Dimensioned)		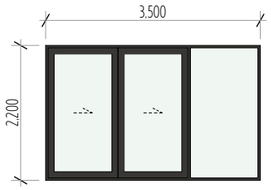	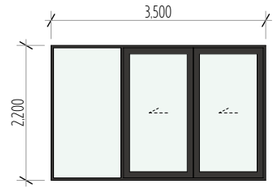	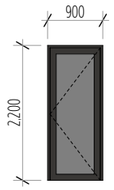	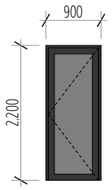	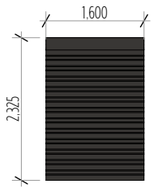	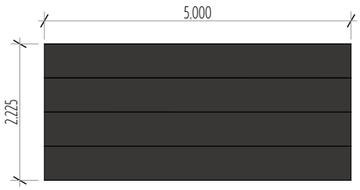
Unit W x H Size	890•2,200	3,500•2,200	3,500•2,200	900•2,200	900•2,200	1,600•2,200	5,000•2,200
FL to Head Height	2,200	2,200	2,200	2,200	2,200	2,200	2,200
FL to Sill	0	0	0	0	0	0	0
Restrictor stays	☐	☐	☐	☐	☐	☐	☐
Double-Glazed	☒	☒	☒	☒	☒	☐	☐
Safety Glass	☒	☒	☒	☒	☒	☐	☐
Frosted	☐	☐	☐	☒	☒	☐	☐

Door / Window ID	D0.08	D0.09	D0.10	D0.11	D0.12	D0.13	W0.01
Quantity	1	1	1	1	1	1	1
2D Elevation (Unit Size Dimensioned)	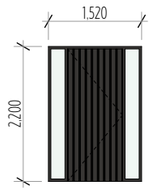	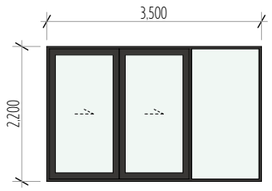	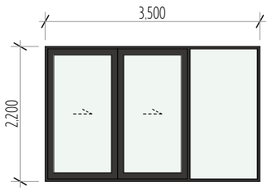	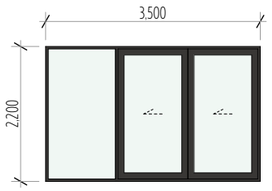	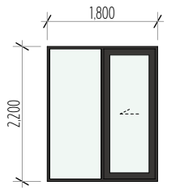	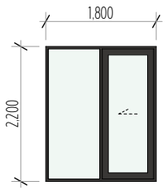	
Unit W x H Size	1,520•2,203	3,500•2,200	3,500•2,200	3,500•2,200	1,800•2,200	1,800•2,200	700•2,200
FL to Head Height	2,203	2,200	2,200	2,200	2,200	2,200	2,200
FL to Sill	0	0	0	0	0	0	0
Restrictor stays	☐	☐	☐	☐	☐	☐	☐
Double-Glazed	☒	☒	☒	☒	☒	☒	☒
Safety Glass	☐	☒	☒	☒	☒	☒	☐
Frosted	☐	☐	☐	☐	☐	☐	☐

Door / Window ID	W0.02	W0.03	W0.04	W0.05	W0.06	W0.07	W0.08	W0.09	W0.10
Quantity	1	1	1	1	1	1	1	1	1
2D Elevation (Unit Size Dimensioned)	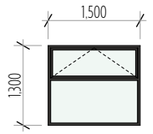	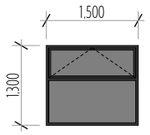	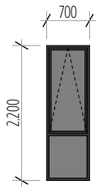	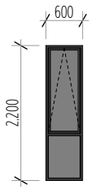	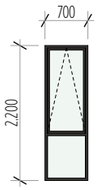		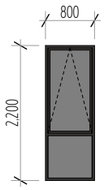	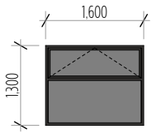	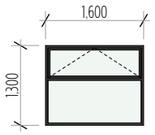
Unit W x H Size	1,500•1,300	1,500•1,300	700•2,200	600•2,200	700•2,200	700•2,200	800•2,200	1,600•1,300	1,600•1,300
FL to Head Height	2,200	2,200	2,200	2,200	2,200	2,200	2,200	2,200	2,200
FL to Sill	900	900	0	0	0	0	0	900	900
Restrictor stays	☒	☒	☐	☐	☐	☐	☐	☒	☒
Double-Glazed	☒	☒	☒	☒	☒	☒	☒	☒	☒
Safety Glass	☐	☐	☐	☒	☐	☐	☒	☒	☐
Frosted	☐	☒	☒	☒	☐	☐	☒	☒	☐

Exterior Door & Window Schedule

Key/Notes

All glazing to NZS 4223 - Parts 1 & 4:2008, Parts 2 & 3:2016

Dimensions shown are Unit Size

COASTAL HOMES

Project Title

ACDL Trustee Ltd. D&L Kendall

Site Address

Lot 81 The Sanctuary, Mangawhai

Drawing Issue

Building Consent

Sheet Title

Exterior Door & Window Schedule

Scale	Drawn
1:100 @ A3	Marc R. Vale
Date	Checked
27/06/21	CADetailer Ltd.
Drawing no.	Revision
801	02

All dimensions to be verified on site before commencing any work or producing shop drawings. Do not scale.
The copyright of this drawing remains with CH Northland Ltd and CADetailer Ltd.

RevID	ChID	Change Name	Date
01			14/05/21
02	01	Building Consent	27/06/21

Room Location	Bath	Bedroom 2	Bedroom 2 WR	Bedroom 3	Bedroom 3 WR	Bedroom 4	Bedroom 4 WR	Coats	Ensuite	Garage	Garage Store	Laundry	Linen	Master Bedroom	Master Bedroom WIR	Master Bedroom WR	Ride-On Mower Garage	Scullery	Store
Door Leaf	Bath	760	2/610	760	2/610	760	2/610	2/610	760	760	2/610	760	2/610	760	760 CS	2/760 Slider	760 CS	760 CS	2/610
Quantity	1	1	1	1	1	1	1	1	1	1	1	1	1	1	1	1	1	1	1
2D Elevation (Unit Size Dimensioned)	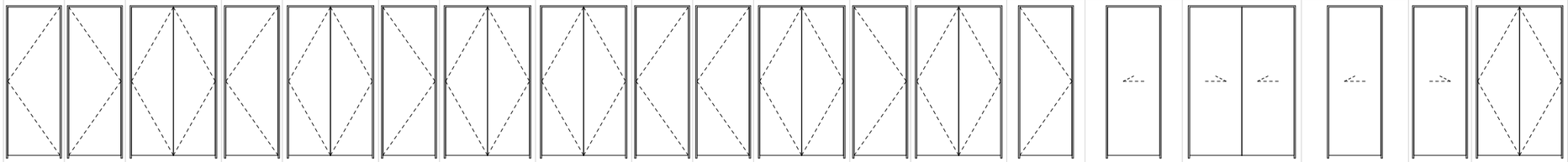																		
Frame W x H Size	800•2,220	800•2,220	1,260•2,220	800•2,220	1,260•2,220	800•2,220	1,260•2,220	1,260•2,220	800•2,220	800•2,220	1,260•2,220	800•2,220	1,260•2,220	800•2,220	800•2,220	1,560•2,220	800•2,220	800•2,220	1,260•2,220

Room Location	Store	WC
Door Leaf	710	760
Quantity	2	1
2D Elevation (Unit Size Dimensioned)	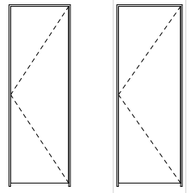	
Frame W x H Size	750•2,220	800•2,220

Interior Door Schedule

Key/Notes

All glazing to NZS 4223 - Parts 1 & 4:2008, Parts 2 & 3:2016

Dimensions shown are Unit Size

COASTAL HOMES

Project Title

ACDL Trustee Ltd. D&L Kendall

Site Address

Lot 81 The Sanctuary, Mangawhai

Drawing Issue

Building Consent

Sheet Title

Internal Door Schedule

Scale	Drawn
1:100 @ A3	Marc R. Vale
Date	Checked
27/06/21	CADetailer Ltd.
Drawing no.	Revision
802	01

All dimensions to be verified on site before commencing any work or producing shop drawings. Do not scale.
The copyright of this drawing remains with CH Northland Ltd and CADetailer Ltd.

RevID	ChID	Change Name	Date
01			27/06/21

BRACING CALCULATIONS

TABLE: Default

Location of Storey	Single	Wind Zone	High
Room in Roof Space	No	Earthquake Zone	1
Building Width (BW)	17.6m	Soil Class	E - Very Soft
Building Length (BL)	25.9m		
Gross Floor Area (GFA)	269.69m²	W along	55.0BU/m
Floor Height to Apex	5m	W along x BW	968.0BU
Roof Height Above Eaves	3m	W across	60.0BU/m
Roof Pitch	0 - 25°	W across x BL	1,554.6BU
Roof Style	Gable		
Double Top Plate	Yes	EQ	3.0BU/m²
Floor Load	2kPa	EQ x GFA	809.1BU
Cladding Weights:			
- Subfloor	Concrete Floor		
- Wall	Medium		
- Roof	Light	Calculations based on NZS3604:2011	

BRACING ALONG

Required			Provided							Achieved	
Line	W BU	EQ BU	Brace	Type	W BU/m	EQ BU/m	Length m	Height m	Angle	W BU	EQ BU
M	100.0	100.0	M-1	EP1_1.2	120.0	135.0	2.4	2.6	-	288.0	324.0
										288.0	324.0
N	100.0	100.0	N-1	GS1-N	70.0	60.0	1.8	2.6	-	126.0	108.0
			N-2	GS1-N	50.0	55.0	0.9	2.6	-	45.0	49.5
										171.0	157.5
O	100.0	100.0	O-1	EP1_1.2	120.0	135.0	1.2	2.6	-	144.0	162.0
			O-2	EP1_1.2	120.0	135.0	1.2	2.6	-	144.0	162.0
										288.0	324.0
P	213.9	213.9	P-1	GS1-N	70.0	60.0	1.8	2.6	-	125.3	107.4
			P-2	EP1_1.2	120.0	135.0	1.2	2.6	-	144.0	162.0
			P-3	EP1_1.2	120.0	135.0	1.2	2.6	-	144.0	162.0
			P-4	EP1_1.2	120.0	135.0	1.2	2.6	-	144.0	162.0
			P-5	GS1-N	70.0	60.0	2.4	2.6	-	164.9	141.3
										722.2	734.7
Q	100.0	100.0	Q-1	GS1-N	70.0	60.0	1.8	2.6	-	125.3	107.4
			Q-2	GS1-N	70.0	60.0	1.8	2.6	-	125.3	107.4
			Q-3	GS1-N	70.0	60.0	3.4	2.6	-	240.1	205.8
										490.7	420.6
R	388.7	388.7	R-1	EP1_0.6	95.0	105.0	0.6	2.6	-	57.0	63.0
			R-2	EP1_1.2	120.0	135.0	1.2	2.6	-	144.0	162.0
			R-3	EP1_1.2	120.0	135.0	1.2	2.6	-	144.0	162.0
			R-4	EP1_0.6	95.0	105.0	0.6	2.6	-	57.0	63.0
			R-5	EP1_0.6	95.0	105.0	0.6	2.6	-	57.0	63.0
			R-6	EP1_0.4	80.0	95.0	0.5	2.6	-	40.8	48.5
										499.8	561.5
			Total						Achieved	2,459.6	2,522.2
									Required	968.0	809.1

BRACING ACROSS

Required			Provided							Achieved	
Line	W BU	EQ BU	Brace	Type	W BU/m	EQ BU/m	Length m	Height m	Angle	W BU	EQ BU
A	170.4	170.4	A-1	EP1_1.2	120.0	135.0	2.4	2.6	-	288.0	324.0
			A-2	EP1_1.2	120.0	135.0	1.2	2.6	-	144.0	162.0
										432.0	486.0
B	129.6	100.0	B-1	GS1-N	70.0	60.0	4.1	2.6	-	284.9	244.2
			B-2	GS1-N	70.0	60.0	2.6	2.6	-	179.3	153.7
										464.2	397.9
C	129.6	100.0	C-1	GS1-N	70.0	60.0	2.3	2.6	-	159.5	136.7
			C-2	GS1-N	70.0	60.0	1.9	2.6	-	130.6	111.9
			C-3	EP1_1.2	120.0	135.0	1.2	2.6	-	144.0	162.0
			C-4	EP1_0.6	95.0	105.0	0.6	2.6	-	57.0	63.0
										491.0	473.6
D	129.6	100.0	D-1	GS1-N	70.0	60.0	3.4	2.6	-	234.6	201.1
										234.6	201.1
E	154.7	154.7	E-1	GS1-N	70.0	60.0	2.1	2.6	-	146.1	125.2
			E-2	EP1_1.2	120.0	135.0	1.2	2.6	-	144.0	162.0
			E-3	EP1_1.2	120.0	135.0	1.2	2.6	-	144.0	162.0
			E-4	EP1_1.2	120.0	135.0	1.2	2.6	-	144.0	162.0
										578.1	611.2
F	264.0	264.0	F-1	EP1_0.6	95.0	105.0	1.0	2.6	-	95.0	105.0
			F-2	EP1_1.2	120.0	135.0	1.2	2.6	-	144.0	162.0
			F-3	EP1_0.6	95.0	105.0	0.8	2.6	-	76.0	84.0
			F-4	EP1_1.2	120.0	135.0	1.2	2.6	-	144.0	162.0
			F-5	EP1_0.6	95.0	105.0	0.6	2.6	-	57.0	63.0
										516.0	576.0
			Total						Achieved	2,715.9	2,745.8
									Required	1,554.6	809.1

COASTAL HOMES

Project Title

ACDL Trustee Ltd. D&L Kendall

Site Address

Lot 81 The Sanctuary, Mangawhai

Drawing Issue

Building Consent

Sheet Title

Bracing Calculations

Scale	Drawn
N/A	Marc R. Vale
Date	Checked
27/06/21	CADetailer Ltd.
Drawing no.	Revision
803	02

All dimensions to be verified on site before commencing any work or producing shop drawings. Do not scale.
The copyright of this drawing remains with CH Northland Ltd and CADetailer Ltd.

RevID	ChID	Change Name	Date
01			14/05/21
02	01	Building Consent	27/06/21

Form 2A

Memorandum from licensed building practitioner: Certificate of design work

Section 30C or 45, Building Act 2004

Please fill in the form as fully and correctly as possible.
If there is insufficient room on the form for requested details, please continue on another sheet and attach the additional sheet(s) to this form.

THE BUILDING

Street address: Lot 81 Robert Hastie Drive	
Suburb: The Sanctuary	
Town/City: Mangawhai	Postcode: 0573

THE OWNER(S)

Name(s): Dave & Linda Kendall	
Mailing address: 17 Pinefield Road	
Suburb:	PO Box/Private Bag:
Town/City: Whenupai	Postcode:
Phone number: 0220 546 323	Email address: linda.kendall@xtra.co.nz

BASIS FOR PROVIDING THIS MEMORANDUM

I am providing this memorandum in my role as the: Please tick the option that applies ✓

☑	**sole** designer of all of the RBW design outlined in this memorandum – I carried out all of the RBW design work myself – no other person will be providing any additional memoranda for the project
☐	**lead** designer who carried out some of the RBW design myself but also supervised other designers – this memorandum covers their RBW design work as well as mine, and **no other** person will be providing any additional memoranda for the project
☐	**lead** designer for all but specific elements of RBW – this memorandum only covers the RBW design work that I carried out or supervised and the **other** designers will provide their own memorandum relating to their specific RBW design
☐	**specialist** designer who carried out specific elements of RBW design work as outlined in this memorandum – other designers will be providing a memorandum covering the remaining RBW design work

IDENTIFICATION OF DESIGN WORK THAT IS RESTRICTED BUILDING WORK (RBW)

I Marc Vale carried out / supervised the following design work that is restricted building work

PRIMARY STRUCTURE: B1

Design work that is RBW	Description of RBW	Carried out or supervised	Reference to plans and specifications
Tick ✓ if included. Cross ☒ if excluded	If appropriate, provide details of the RBW	Tick ✓ whether you carried out this design work or supervised someone else carrying out this design work	If appropriate, specify references
All RBW design work relating to B1 ☐		☐ Carried out ☐ Supervised	
Foundations and subfloor framing ☑	Firth Ribraft to Codemark	☑ Carried out ☐ Supervised	401-403, 501, 701-703

Design work that is RBW	Description of RBW	Carried out or supervised	Reference to plans and specifications
Tick ✓ if included. Cross ✗ if excluded	If appropriate, provide details of the RBW	Tick ✓ whether you carried out this design work or supervised someone else carrying out this design work	If appropriate, specify references
Walls ☑	Timber framed walls to NZS3604:2011	☑ Carried out ◯ Supervised	201, 401-403, 502, 701-709
Roof ☑	Pre-fabricated roof trusses	☑ Carried out ☑ Supervised	Truss PS1 & Layout, 401-403, 504, 706-709
Columns and beams ☑	Lintels designed to NZS3604:2011 and with designIT software	☑ Carried out ◯ Supervised	504, 708-709, designIT calculations
Bracing ☑	GIB & Ecoply Bracing	☑ Carried out ◯ Supervised	503, 710, 803
Other ◯		◯ Carried out ◯ Supervised	

Design work that is RBW	Description of RBW	Carried out or supervised	Reference to plans and specifications
Tick ✓ if included. Cross ✗ if excluded	If appropriate, provide details of the RBW	Tick ✓ whether you carried out this design work or supervised someone else carrying out this design work	If appropriate, specify references
EXTERNAL MOISTURE MANAGEMENT SYSTEMS: E2			
All RBW design work relating to E2 ○		○ Carried out ○ Supervised	
Damp proofing ✓	DPM to u/s of concrete foundation	✓ Carried out ○ Supervised	401-403, 501, 701-703
Roof cladding or roof cladding system ✓	Gerard Metal Tile roofing	✓ Carried out ○ Supervised	301-302, 401-403, 505, 706-707
Ventilation system (for example, subfloor or cavity) ✓	EZpanel over cavity	✓ Carried out ○ Supervised	301-302, 401-403, 701-707
Wall cladding or wall cladding system ✓	EZpanel over cavity	✓ Carried out ○ Supervised	301-302, 401-403, 701-707
Waterproofing ○		○ Carried out ○ Supervised	
Other ○		○ Carried out ○ Supervised	

Design work that is RBW	Description of RBW	Carried out or supervised	Reference to plans and specifications
Tick ✓ if included. Cross ✗ if excluded	If appropriate, provide details of the RBW	Tick ✓ whether you carried out this design work or supervised someone else carrying out this design work	If appropriate, specify references
FIRE SAFETY SYSTEMS: C1 - C6			
Emergency warning systems Evacuation and fire service operation systems ◯ Suppression or control systems Other		◯ Carried out ◯ Supervised	

Note: The design of fire safety systems is only restricted building work when it involves small-to-medium apartment buildings as defined by the Building (Definition of Restricted Building Work) Order 2011.

WAIVERS AND MODIFICATIONS

Waivers or modifications of the Building Code are required. ◯ Yes ✓ No

If Yes, provide details of the waivers or modifications below:

Clause	Waiver/modification required
List relevant clause numbers of building code	Specify nature of waiver or modification of building code required

ISSUED BY

Name and contact details of the licensed building practitioner who is licensed to carry out or supervise design work that is restricted building work.

Name: Marc Vale	LBP or Registration number: BP134199
The practitioner is a: ☑ Design LBP ○ Registered architect ○ Chartered professional engineer	
Design Entity or Company (optional): Cadetailer Ltd.	
Mailing address (if different from below):	
Street address/Registered office: 10 Danny Place	
Suburb: Pyes Pa	Town/City: Tauranga
PO Box/Private Bag:	Postcode: 3112
Phone number:	Mobile: 021471119
After hours:	Fax:
Email address: marc@cadetailer.co.nz	Website:

DECLARATION

I Marc Vale LBP, state that I have applied the skill and care reasonably required of a competent design professional in carrying out or supervising the Restricted Building Work (RBW) described in this form, and that based on this, I also state that the RBW:

- Complies with the building code, or
- Complies with the building code subject to any waiver or modification of the building code recorded on this form

Signature: 

Date: 22/06/2021

designIT® HOUSES

CarterHoltHarvey LVL

Date printed: 21 June 2021
Page: 1 of 7

DESIGN CERTIFICATE

Technical basis for structural design methodology contained in designIT for houses - New Zealand.

designIT for houses, New Zealand has been developed by experienced timber engineers to assist designers in selecting appropriate sizes of structural laminated veneer lumber products manufactured by Carter Holt Harvey LVL Limited (including hySPAN, hy90, hyONE and hyJOIST) and other generic stress grades of timber, to be used as structural elements for the construction of buildings that fall within the scope of NZS 3604.

The design methodology used for the software complies with the loading and general design requirements contained within AS/NZS 1170 and with timber structural design in accordance with NZS 3603:1993 including Amendment 4 (Verification method B1/VM1, 6.1).

designIT relies on the accurate input of span and loading information by the user. Where accurate inputs are submitted the product and/or stress grade and the size given will comply with the structural requirements of the New Zealand Building Code (NZBC), provided the installation is in accordance with the installation requirements provided by designIT and/or in product literature and/or NZS 3604, or specific engineering design, as appropriate.

Futurebuild LVL and SG8 components, when used and treated to the required treatment levels prescribed in NZS 3602 and NZS 3604, as modified by Acceptable Solution B2/AS1, will comply with the requirements of the NZBC (Acceptable Solution B2/AS1, 3.2).

References:
1. NZS 3603:1993 Timber Structures Standard.
2. NZS 3604:2011 Timber-framed buildings.
3. AS/NZS 1170:2002 Structural design actions, Parts 0 and 1.
4. AS/NZS 1170:2011 Structural design actions, Part 2: Wind actions.
5. AS/NZS 1170:2003 Structural design actions, Part 3: Snow and ice actions.
6. AS 1720.1:2010 Timber structures. Part 1: Design methods.
7. AS 1720.3:2016 Timber structures. Part 3: Design criteria for timber-framed residential buildings.

This Design Certificate, and any associated warranty/certification, is void where there has been substitution of alternate products not detailed within the Member Specification.

Version date: 3 February 2021

For further information or advice contact:
Carter Holt Harvey LVL Limited,
173 Captain Springs Road, Onehunga. Auckland
Telephone: 0800 808 131
Email: designit@futurebuild.co.nz
Web: https://futurebuild.co.nz/

Specifier details:

Specifier:	Marc R. Vale
Business name:	Cadetailer Limited
Address:	10 Danny Place Pyes Pa Tauranga 3112
Email:	marc@cadetailer.co.nz

Project & site details:

Project:	Kendall
Site address:	Lot 81 The Sanctuary Mangawhai
For (owner/s):	CH Northland Ltd.
Design wind zone	High
Snow loading	Design snow zone: N0

MEMBER DESIGN DETAILS

Member 1

1) Member code and description	L1 - Lintels - Supporting girder truss / truncated girder truss
2) Date prepared	21 June 2021

designIT® HOUSES

CarterHoltHarvey LVL

3) Serviceability criteria AS 1720.1: 2010 and AS 1720.3: 2016

4) Design inputs

Roof type	Light roof and ceiling - 40 kg/m²
Roof pitch	25.0 °
Truss spacing	900 mm
Eaves overhang	600 mm
TGT span	6500 mm
TGT setback	3250 mm
TGT offset	1480 mm
Lintel span	1600 mm
Nominal wall thickness	90 mm

5) Member specification

Size, stress grade/product	Use 150 x 90 hy90
Material type	Structural Laminated Veneer Lumber to AS/NZS 4357

6) Serviceability

Load case	Limit[3] on average deflection[2]	Estimated average deflection[2]	Rigidity ratio[4]
Long term load - $G + \Psi_L Q^*$	5.3 mm	1.1 mm (long term)	4.8
Live load - $\Psi_s Q$	6.4 mm	0.3 mm	19.5
Wind load - W_s	8.0 mm	1.0 mm	8.1

*Critical serviceability load case
See 'Notes for interpretation of serviceability data' at the end of this report

7) Reactions

		Limit States Design Reaction[2,3]
Load case	k_1[1]	End kN[4]
1.35G	0.60	-4.2
1.2G + 1.5Q	0.80	-6.5
$1.2G + W_u + \Psi_c Q$	1.00	-9.2
$0.9G + W_u$	1.00	6.0

8) Installation requirements

- Provide at least 30 mm bearing at end supports

Member 2

1) Member code and description L2 - Lintels - Supporting girder truss / truncated girder truss

2) Date prepared 21 June 2021

3) Serviceability criteria AS 1720.1: 2010 and AS 1720.3: 2016

designIT® HOUSES

CarterHoltHarvey LVL

4) Design inputs

Roof type	Light roof and ceiling - 40 kg/m²
Roof pitch	25.0 °
Truss spacing	900 mm
Eaves overhang	600 mm
TGT span	6500 mm
TGT setback	3250 mm
TGT offset	580 mm
Lintel span	1500 mm
Nominal wall thickness	90 mm

5) Member specification

Size, stress grade/product	Use 150 x 90 hy90
Material type	Structural Laminated Veneer Lumber to AS/NZS 4357

6) Serviceability

Load case	Limit[3] on average deflection[2]	Estimated average deflection[2]	Rigidity ratio[4]
Long term load - $G + \Psi_L Q^*$	5.0 mm	1.7 mm (long term)	2.9
Live load - $\Psi_s Q$	6.0 mm	0.5 mm	11.6
Wind load - W_s	7.5 mm	1.6 mm	4.8

*Critical serviceability load case
See 'Notes for interpretation of serviceability data' at the end of this report

7) Reactions

		Limit States Design Reaction[2,3]
Load case	k_1[1]	End kN[4]
1.35G	0.60	-3.6
1.2G + 1.5Q	0.80	-5.7
$1.2G + W_u + \Psi_c Q$	1.00	-8.1
$0.9G + W_u$	1.00	5.2

8) Installation requirements

- Provide at least 30 mm bearing at end supports

Member 3

1) Member code and description L3 - Lintels - In single or upper storey load bearing walls

2) Date prepared 21 June 2021

3) Serviceability criteria AS 1720.1: 2010 and AS 1720.3: 2016

4) Design inputs

Span	3.5 m
Roof load width 'RLW'	7.5 m
Roof type and mass	Light roof and ceiling - 40 kg/m²
Nominal wall thickness	90 mm

5) Member specification

Size, stress grade/product	Use 300 x 90 hyONE
Material type	Structural Laminated Veneer Lumber to AS/NZS 4357

designIT® HOUSES

CarterHoltHarvey LVL

6) Serviceability

Load case	Limit[3] on average deflection[2]	Estimated average deflection[2]	Rigidity ratio[4]
Long term load - $G + \Psi_L Q^*$	10.0 mm	4.1 mm (long term)	2.5
Live load - $\Psi_s Q$	14.0 mm	1.2 mm	11.6
Wind load - W_s	17.5 mm	3.6 mm	4.8

*Critical serviceability load case
See 'Notes for interpretation of serviceability data' at the end of this report

7) Reactions

		Limit States Design Reaction[2,3]
Load case	k_1[1]	End kN[4]
1.35G	0.60	-8.1
1.2G + 1.5Q	0.80	-12.5
$1.2G + W_u + \Psi_c Q$	1.00	-17.6
$0.9G + W_u$	1.00	11.2

8) Installation requirements

- Provide at least 30 mm bearing at end supports

Member 4

1) Member code and description L4 - Lintels - In single or upper storey load bearing walls

2) Date prepared 21 June 2021

3) Serviceability criteria AS 1720.1: 2010 and AS 1720.3: 2016

4) Design inputs

Span	5.0 m
Roof load width 'RLW'	4.0 m
Roof type and mass	Light roof and ceiling - 40 kg/m²
Nominal wall thickness	90 mm

5) Member specification

Size, stress grade/product	Use 2/360 x 45 hySPAN
Material type	Structural Laminated Veneer Lumber to AS/NZS 4357

6) Serviceability

Load case	Limit[3] on average deflection[2]	Estimated average deflection[2]	Rigidity ratio[4]
Long term load - $G + \Psi_L Q^*$	10.0 mm	6.2 mm (long term)	1.6
Live load - $\Psi_s Q$	15.0 mm	1.7 mm	8.8
Wind load - W_s	25.0 mm	5.2 mm	4.8

*Critical serviceability load case
See 'Notes for interpretation of serviceability data' at the end of this report

designIT® HOUSES

CarterHoltHarvey LVL

7) Reactions

		Limit States Design Reaction[2,3]
Load case	k_1[1]	End kN[4]
1.35G	0.60	-6.2
1.2G + 1.5Q	0.80	-9.3
1.2G + W_u + Ψ_cQ	1.00	-13.0
0.9G + W_u	1.00	7.7

8) Installation requirements

- Provide at least 30 mm bearing at end supports
- Vertical lamination in accordance with Detail H1.

Member 5

1) Member code and description L5 - Lintels - In single or upper storey load bearing walls

2) Date prepared 21 June 2021

3) Serviceability criteria AS 1720.1: 2010 and AS 1720.3: 2016

4) Design inputs

Span	3.5 m
Roof load width 'RLW'	4.5 m
Roof type and mass	Light roof and ceiling - 40 kg/m²
Nominal wall thickness	90 mm

5) Member specification

Size, stress grade/product	Use 2/240 x 45 hySPAN
Material type	Structural Laminated Veneer Lumber to AS/NZS 4357

6) Serviceability

Load case	Limit[3] on average deflection[2]	Estimated average deflection[2]	Rigidity ratio[4]
Long term load - G + Ψ_LQ*	10.0 mm	5.7 mm (long term)	1.8
Live load - Ψ_sQ	14.0 mm	1.7 mm	8.4
Wind load - W_s	17.5 mm	5.0 mm	3.5

*Critical serviceability load case
See 'Notes for interpretation of serviceability data' at the end of this report

7) Reactions

		Limit States Design Reaction[2,3]
Load case	k_1[1]	End kN[4]
1.35G	0.60	-5.2
1.2G + 1.5Q	0.80	-8.0
1.2G + W_u + Ψ_cQ	1.00	-11.2
0.9G + W_u	1.00	7.0

8) Installation requirements

- Provide at least 30 mm bearing at end supports
- Vertical lamination in accordance with Detail H1.

designIT® HOUSES

CarterHoltHarvey LVL

Notes for interpretation of serviceability data

1. 'average deflection' is an engineering concept based upon a notional estimated load, notional member rigidity and, in some cases, an approximate model of material response to environmental conditions. These parameters are, 'standardised' in AS 1170 and AS 1720.

2. Deflection is the flexural response to load 'out-of-level' measurements of installations are not necessarily deflections and can incorporate 'initial out-of-straightness', whether intended or not. Furthermore, loads can be higher/lower than the notional estimate and in any comparison with measured levels, material variability needs to also be considered. AS 1720 gives the following basis for estimation of upper bound deflections for various materials.

No 1 Framing – visually graded to NZS 3631	Average + 100%
SG grades - mechanically graded to AS/NZS 1748	Average + 43%
GL grades for glulam to AS 1328	Average + 33%
LVL to AS/NZS 4357 (includes hySPAN and hyJOIST)	Average +18%

As can be seen, comparison of the 'average deflection' for different materials, even if calculated on the same basis, does not give the whole picture!

3. The limits referred are those specified in AS 1720.3 for the stated load case.

4. 'Rigidity ratio' expresses the rigidity of the specified beam relative to the rigidity of a notional beam just meeting the serviceability requirements detailed.

Notes for interpretation of reaction data

1. Duration of load factor 'k_1' for strength as per NZS 3603:1993
2. Negative (-) reactions relate to the 'gravity' or 'downwards' force on the support
3. Positive reactions relate to the 'upwards' forces or 'tie-down' requirement on the support
4. End reaction includes allowance for overhang/cantilever where one has been designed

Detail H1: Vertical Lamination - Two Pieces

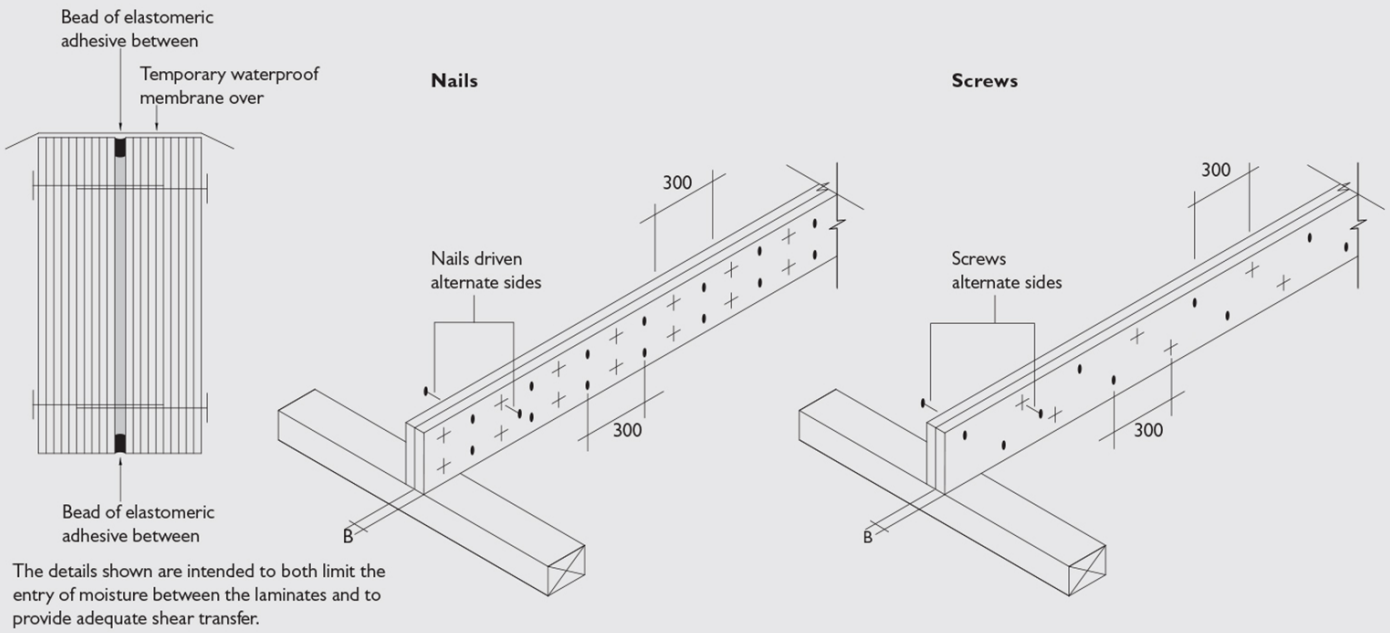

The details shown are intended to both limit the entry of moisture between the laminates and to provide adequate shear transfer.

Section Size 'B'	Minimum Nail Diameter	Minimum Nail Length	Minimum Screw gauge	Minimum Screw Length
35	3.06 mm	75 mm	-	-
45	3.30 mm	90 mm	14 g	75 mm
63	3.30 mm	100 mm	14 g	100 mm
90	-	-	14 g	150 mm

designIT®
HOUSES

CarterHoltHarvey
LVL

BRANZ NZS 4218:2009 CALCULATION METHOD TOOL

PROJECT SUMMARY

Project name	Linda Kendall New Residence
Address	ot 81 The Sanctuary, Mangawhai
Designer	Marc Vale
Address	10 Danny Place, Pyes Pa, Tauranga
Phone	O21471119
Date	22/06/21
Reference number	

Climate zone	1: Northland, Auckland, Thames-Coromandel districts	
Wall construction type	1: Any wall type	
If mixed wall types	0	Percentage of wall area solid timber construction
	0	Percentage of wall area high thermal mass construction
	100	Percentage of wall area "Any wall type"
If solid timber wall	1: External 75 mm thick solid timber and timber framed internal walls	

Is there just one wall construction R-value (R_{Wall}) and one door (R_{Door}) construction R-value (but different to the walls) for the building? no

Summary of calculation method heat loss

Element	Area (m²)	Proposed building heat loss (W/°C)	Reference building heat loss (W/°C)	
Roofs/ceilings	269.7	80.0	93.0	
Walls	167.3	69.4	97.5	
Floors	269.7	130.3	207.5	
Vertical glazing	69.6	267.8	294.0	
Skylights	0.0	0.0	-	
Doors (Attributable)	17.9	14.3	-	
Total		561.9	692.0	W/°C

Glazing percentage: 27%
Glazing <50%: Yes
Minimum R-values OK: Yes
Issues to check:

PASS/FAIL **PASS**

BRANZ NZS 4218:2009 CALCULATION METHOD TOOL

BUILDING ELEMENTS

Roofs/ceilings: Skylights are not included here. Enter them in the skylights table below.

Roof/ceiling element	Description	Area (m²)	Construction R-value	Heat loss
1	Metal tile roofing over layer of R3.6 fibreglass batt	269.69	3.37	80.0
2				
3				
4				
5				
	Total area	269.7 m²		
			Total roofs/ceilings heat loss	80.0 W/°C

Skylights: Skylights are at an angle of 60° or less to the horizontal. If the skylight R-value is not known, use a value of 0.15.

Skylight	Description	Area (m²)	Construction R-value	Heat loss
1				
2				
3				
4				
	From Skylight Schedule	0.0		0.0
	Total area	0.0 m²		
			Total skylight heat loss	0.0 W/°C

Walls: Doors are not included here. Enter them in the door table.
Each wall area is the total wall area less the glazing and door area for that wall

Wall element	Description	Area (m²)	Construction R-value	Heat loss
1	Ezpanel over cavity with 90mm framing and R2.6	167.3	2.41	69.4
2				
3				
4				
5				
6				
7				
8				
9				
10				
	Total area	167.3 m²		
			Total wall heat loss	69.4 W/°C

Floors: Only include the ground or exterior floors. Intermediate floors not exposed to the exterior are excluded.
H1/AS1 is not perm

Floor element	Description	Area (m²)	Construction R-value	Heat loss
1	Firth Ribraft	269.69	2.07	130.3
2				
3				
4				
5				
	Total area	269.7 m²		
			Floor heat loss	130.3 W/°C

Vertical glazing: Vertical glazing only (steeper than 60°), including glazing in doors. Skylights are on the Skylight table.
If the glazing R-value is not known, use a value of 0.15

Glazing element	Description	Area (m²)	Construction R-value	Heat loss
1	Refer to Element Schedule			
2				
3				
4				
5				
6				
7				
8				
9				
10				
	From Glazing Schedule	69.6		267.8
	Total area	69.6 m²		
			Total vertical glazing heat loss	267.8 W/°C

Doors: Only the non-glazed area of doors is included. The glazed area of doors must be entered in the Glazing table.
The heat loss of doors is automatically set to 0 if the total door area is ≤ 6m² or 6% of the total wall area.
If the area of doors are above 6m² or 6% of the total wall area then the marginal heat loss needs to be considered.
If the insulation values of the walls are different or the insulation value of the doors are different then
the assignable heat loss due to doors can not be calculated using this tool.
If the R-value of a door is not entered a default value of R 0.18 is automatically used.

Door element	Description	Area (m²)	Construction R-value	Heat loss
1	Refer to Element Schedule			0.0
2				0.0
3				0.0
4				0.0
5				0.0
	From Door Schedule	17.9	0.18	99.2
	Total area	17.9 m²		
15.29052	Attributable	2.6	0.18	14.3 W/°C

BRANZ NZS 4218:2009 CALCULATION METHOD TOOL

Vertical Glazing Schedule

Vertical glazing: Vertical glazing only (steeper than 60°), including glazing in doors. Skylights are on the Skylight table.
If the glazing R-value is not known, use a value of 0.15

ID	Description	Quantity	Height (mm)	Width (mm)	Construction R-value	Area (m²)	Heat loss
1	D0.01	1	2200	890	0.26	2.0	7.5
2	D0.02	1	2200	3500	0.26	7.7	29.6
3	D0.03	1	2200	3500	0.26	7.7	29.6
4	D0.04	1	2200	900	0.26	2.0	7.6
5	D0.05	1	2200	900	0.26	2.0	7.6
6	D0.09	1	2200	3500	0.26	7.7	29.6
7	D0.10	1	2200	3500	0.26	7.7	29.6
8	D0.11	1	2200	3500	0.26	7.7	29.6
9	D0.12	1	2200	1800	0.26	4.0	15.2
10	D0.13	1	2200	1800	0.26	4.0	15.2
11	W0.01	1	2200	700	0.26	1.5	5.9
12	W0.02	1	1300	1500	0.26	2.0	7.5
13	W0.03	1	1300	1500	0.26	2.0	7.5
14	W0.04	1	2200	700	0.26	1.5	5.9
15	W0.05	1	2200	600	0.26	1.3	5.1
16	W0.06	1	2200	700	0.26	1.5	5.9
17	W0.07	1	2200	700	0.26	1.5	5.9
18	W0.08	1	2200	800	0.26	1.8	6.8
19	W0.09	1	1300	1600	0.26	2.1	8.0
20	W0.10	1	1300	1600	0.26	2.1	8.0
21							
22							
23							
24							
25							
26							
27							
28							
29							
30							
31							
32							
33							
34							
35							
36							
37							
38							
39							
40							
41							
42							
43							
44							
45							
46							
47							
48							
49							
50							
51							
52							
53							
54							
55							
56							
57							
58							
59							
60							
					Total area	69.6	m²
					Total vertical glazing heat loss		267.8

Door Schedule

Doors: Only the non-glazed area of doors is included. The glazed area of doors must be entered in the Glazing table.
The heat loss of doors is automatically set to 0 if the total door area is ≤ 6m² or 6% of the total wall area.
If the area of doors are above 6m² or 6% of the total wall area then the marginal heat loss needs to be considered.
If the insulation values of the walls are different or the insulation value of the doors are different then
the assignable heat loss due to doors can not be calculated using this tool.
If the R-value of a door is not entered a default value of R 0.18 is automatically used.

ID	Description	Quantity	Height (mm)	Width (mm)	Construction R-value	Area (m²)	Heat loss
1	D0.06	1	2200	1600	0.18	3.5	19.6
2	D0.07	1	2200	5000	0.18	11.0	61.1
3	D0.08	1	2200	1520	0.18	3.3	18.6
4							
5							
6							
7							
8							
9							
10							
11							
12							
13							
14							
15							
16							
17							
18							
19							
20							
					Total area	17.9	m²
					Total door heat loss		99.2

Skylight Schedule

Skylights: Skylights are at an angle <= 60° to the horizontal. If the skylight R-value is not known, use of 0.15.

ID	Description	Quantity	Height (mm)	Width (mm)	Construction R-value	Area (m²)	Heat loss
1							
2							
3							
4							
5							
6							
7							
8							
9							
10							
11							
12							
13							
14							
15							
16							
17							
18							
19							
20							
					Total area	0.0	m²
					Total skylight heat loss		0.0

27 May 2021

Linda & David Kendall
linda.kendall@xtra.co.nz

RE: Geotechnical Investigation for Proposed Residence at Lot 81, The Sanctuary, Mangawhai.

Wiley Geotechnical Limited (WGL) was requested by Linda & David Kendall to provide a geotechnical investigation and guidance on foundation design for a proposed new build of a 3-bedroom dwelling and a pool. We have received and reviewed a site plan and a concept house design. We understand the dwelling is proposed to be constructed upon a concrete foundation.

WGL visited the site on and made the following observations:

- The site is located on a section sloping to the west at 12 degrees, and is currently grassed with an olive grove.
- A stormwater culvert is located at the southern end of the house, at the roadside boundary.
- A cut off drain is required behind the house, on the upper part of the slope.
- The building platform for the dwelling has not been formed.
- No obvious signs of instability were noted.
- Two hand augers and Four Scala Penetrometer (Scala) test were undertaken within potentially suitable building sites to a maximum depth of 3 m below ground level.

Geology

The GNS map for the site indicates that it is underlain by sedimentary rocks of the Pakiri Formation (Waitemata Group) (PF) comprising “alternating thick-bedded, volcanic rich, graded sandstone and siltstone with volcaniclastic grit beds.”

Seismic Hazards

Since there are no known active faults crossing the property, it is our opinion that ground rupture is unlikely at the subject property. Granular soils, such as sand, are susceptible to liquefaction in the event of future earthquakes. This may result in settlement or lateral deformation. Based on the regional earthquake risk (discussed further below) and depth to groundwater, it is our opinion that there is a relatively low risk of liquefaction induced settlement or lateral movement such that specific liquefaction design is not required.

We recommend that the future structures and improvements are designed to account for seismic shaking and ground motions. For seismic design at the site and in line with NZS 1170.5:2004 the corresponding design peak ground accelerations (PGA) for the site have been calculated from NZS 1170.5:2004 using the recommendations of the New Zealand Geotechnical Society as follows:

a_h = Z R C

In which:

Z = base PGA called “Hazard factor” and is given by Table 3.3 and Figures 3.3 and 3.4 of NZS 1170.5:2004. Z = 0.13 for areas north of Auckland.

R = “Return period factor” and is given by Table 3.5 of NZS 1170.5:2004 (R = 1.0 for 500 year return period and R = 0.25 for a 25 year return period)

C = Site response factor called “Spectral shape factor” in NZS 1170.5:2004 and is based on the seismic site classification. We consider this site to be **Class C**, based on soil depth and therefore C = 1.33.

The design PGA at the site is given as:

ULS: a_h = 0.13 x 1.00 x 1.33 = 0.17 (i.e. PGA = 0.17 g)

SLS: a_h = 0.13 x 0.25 x 1.33 = 0.04 (i.e. PGA = 0.04 g)

Field Exploration and Subsurface Conditions

WGL carried out a shallow subsurface investigation consisting of two hand augers with shear vane testing and four Scala Penetrometer (Scala) tests within the approximate areas shown on the site plan below.

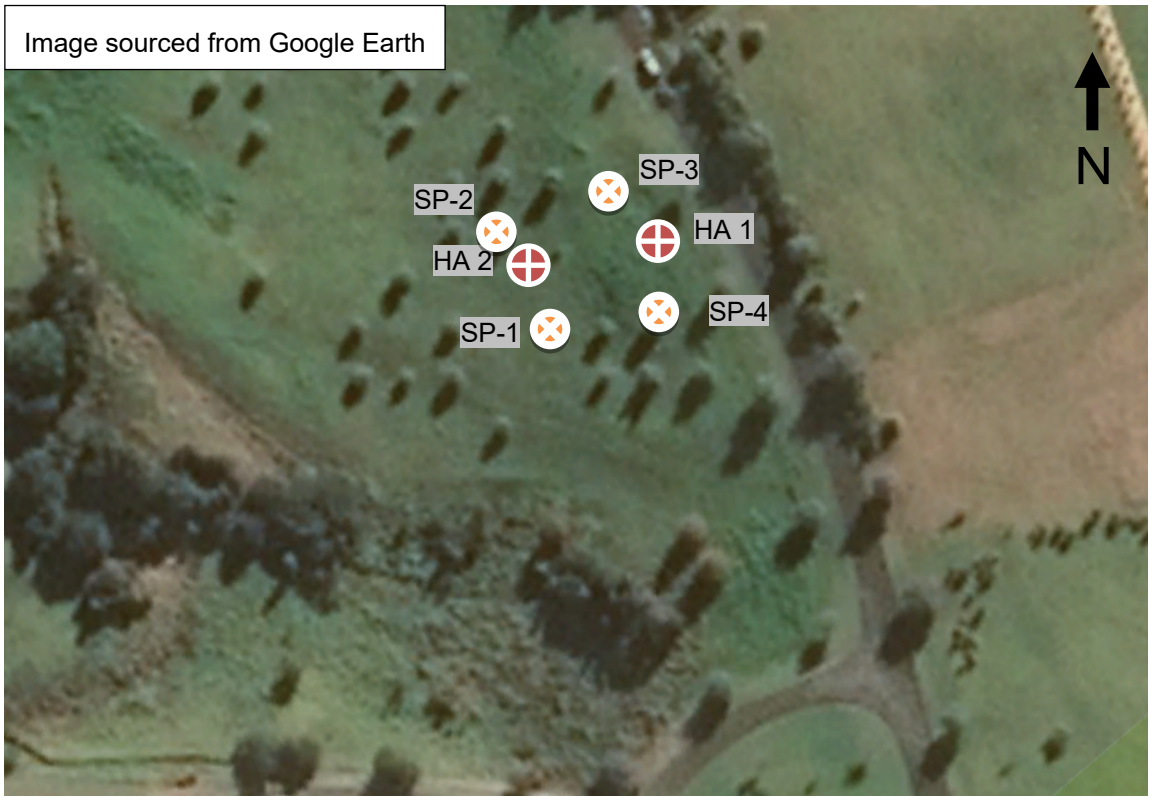

Figure 1: Approximate Subsurface Exploration Locations

The hand augers were carried out to depths of 2.1 and 3.0 m. The subsurface material encountered in our hand auger investigation generally consisted of topsoil underlain by slightly clayey, slightly sandy silt with orange brown staining. Desiccation cracking was observed up to 0.7 m depth. Alternating layers of light grey slightly sandy silt, and light brown/orange brown moderately clayey silt were encountered from about 1.0 and 1.5 m. The measured undrained shear strengths generally all exceeded 100 kPa. The results of the individual Scala tests are shown below.

Groundwater was not encountered during our testing. The groundwater level may vary from the depth measured at the time of exploration, as a result of seasonal change, recent precipitation and/or irrigation practices.

Based on this, it is our opinion that the material encountered in our subsurface investigation is broadly consistent with published geologic mapping. The bore logs are presented as an appendix to this report and are written in general accordance with the New Zealand Geotechnical Society field classification guidelines (NZGS, 2005).

Scala Results

Scala blows/100mm at Lot 81, The Sanctuary, Mangawhai				
(m)	Scala 1 (SP1)	Scala 2 (SP2)	Scala 3 (SP3)	Scala 4 (SP4)
0.1	0	0	0	1
0.2	1	1	1	1
0.3	2	2	2	7
0.4	2	4	3	6
0.5	4	3	4	2
0.6	3	3	3	1
0.7	3	2	3	1
0.8	3	2	2	2
0.9	3	2	2	1

Expansive Soils

Expansive clay and silt soils are common in the wider Northland region and have the tendency to shrink and swell, particularly with seasonal fluctuations of soil water content. This behavior has implications for foundation design and surface structures and should be incorporated during foundation design.

Based on our visual and field assessment of the soils encountered onsite, and our experience in the area, we consider that the Expansive Site Class for this site is “M - moderate” - in accordance with AS 2870. Accordingly, the minimum footing depth is 600 mm below cleared ground level.

Conclusions and Recommendations

It is our opinion that the proposed development is feasible from a geotechnical point of view, provided the recommendations presented in this report and standard development practices are incorporated in the design and construction of the project.

The soil underlying the site does **not** reach “good ground” in the upper metre as defined in NZS 3604 (2011) based on the Scala results as the requirement is 5 blows per 100 mm with a Scala Penetrometer; however the shear vane readings indicate a suitable bearing capacity is available for the proposed house, with readings generally greater than 100 kPa.

Earthworks

We recommend that the earthworks are undertaken by an experienced contractor familiar with the contents of this report and is experienced in these soils.

We consider that the vast majority of on-site soil material shall be suitable to be utilised as engineered fill supporting the proposed residential development. This is expected to primarily consist of silty clay soil and highly to completely weathered rock material. We recommend that all overlying topsoil and organic rich material is stripped and removed from the proposed cut areas prior to excavating the in-situ soil material. The excavated in-situ soil should be handled separately to the topsoil material. No topsoil should be used as, mixed with or remain below any engineered fill material. The cut excavation areas should be graded to allow the flow of stormwater away from the area. Suitable erosion and sediment control methodologies should be employed. Any sloping ground that is excavated into should be battered back to a slope of 3:1 (H:V). Once cut excavation are complete planting or regressing of the areas may have to be employed or long-term erosion and sediment control measures implemented. At this point we would envisage a maximum allowable slope of on-site engineered fill material being 3:1 (H:V), while imported engineered hardfill may be placed up to a maximum slope of 2:1 (H:V).

Concrete Foundation

We recommend that a minimum 300 mm layer of compacted hard fill is placed prior to applying blinding sand for any reinforced concrete slab and foundation elements have a minimum embedment depth of 0.6 m. We recommend a minimum 200 mm layer of compacted hard fill is placed for a waffle slab (i.e Rib-Raft) with the foundation being designed for expansive site class ‘M –Moderate’, as per AS 2870. All topsoil and fill material must be removed before foundation construction commences.

We recommend the following regarding hard fill and its placement:

- Underslab hard fill comprising GAP40/GAP65, or an equivalent approved product, should be placed across the building platform in 100 mm lifts and compacted using appropriate compaction plant (e.g. a hand held or excavator mounted vibrating compaction plate), and brought up to the finished design levels. We would recommend a high quality gravel without too many fines.

- For fills greater than 0.6 m. Every third layer of hard fill lift should be observed and tested by WGL to confirm that it has been placed to an appropriate specification. At this stage it is anticipated that compaction should be to achieve 95% of the maximum dry density (MDD) of the material, to be confirmed onsite using either a NDM (nuclear densometer) or Impact Hammer testing (Target 15 CBR).

A geotechnical ultimate bearing capacity of 300 kPa may be used in the design of a reinforced concrete slab or a waffle slab (i.e. Rib Raft). The ultimate bearing capacity should be available provided that the

hard fill has been placed and certified according to the construction specification. We recommend WGL, or a qualified geotechnical engineer, inspect any excavations prior to the placing of any fill or foundation elements.

Drainage

We recommend that a swale drain or simple v-drain is constructed upslope of the proposed house site to help catch stormwater run-off from the upslope areas. The drain should have a minimum width of 500 mm and depth of 300 mm and discharge downslope clear of the proposed dwelling. The outlet should have a 3 m section of rock rip rap to protect against any scour. The rip-rap apron should have a minimum width of 1 m and depth of 0.3 m, and be filled with 150-300 mm clean rock.

LIMITATIONS

(i) This report has been prepared for the use of our client, Linda & David Kendall and their professional advisers and the relevant Regional Authorities in relation to the specified project brief described in this report. No liability is accepted for the use of any part of the report for any other purpose or by any other person or entity.

(ii) Assessments made in this report are based on the ground conditions indicated from published sources, site inspections and subsurface investigations described in this report based on accepted normal methods of site investigations. Variations in ground conditions may exist between test locations and therefore have not been taken into account in the report. If variations are found during excavation or at foundation preparation stage WGL should be notified immediately so we can amend our recommendations.

(iii) This Limitation should be read in conjunction with the IPENZ/ACENZ Standard Terms of Engagement.

We trust that this information meets your current requirements. Please do not hesitate to contact the undersigned on 021 0399 385 or matt@wileygeotechnical.co.nz if you require any further information.



Matt Wiley, CPEng

Principal Engineer

Attachments:

- Bore Logs

WILEY GEOTECHNICAL LTD

BOREHOLE No. 1

SITE: Lot 81 The Sanctuary, Mangawhai

REF: 21076

Sheet 1 of 1

REDUCED LEVEL (RL) / INFERRED GEOLOGY	DESCRIPTION OF SOIL	SOIL SYMBOL	DEPTH (m)	SAMPLE TYPE	WATER CONTENT (%)	WATER LEVEL	CORRECTED VANE SHEAR STRENGTH (kPa) ●Peak Field Vane ○Remoulded Field vane 50 100 150	SCALA PENETROMETER BLOWS / 100 mm 5 10 15
TS	TOPSOIL dark brown, some topsoil fill							
Pakiri Formation of the Waitemata Group	SILT slightly sandy, slight plasticity, slightly clayey, light brown with orange brown mottling, desiccation cracks to 0.7 m		1				●200 ●200 93 ○ 162 ● 78 ○ 147 ●	
	at 1.3 m increase in mositure, plasticity and clay alternating layers of light grey slightly sandy silt, and light brown/orange brown moderately clayey silt		2				69 ○ 147 ● 57 ○ 123 ● 78 ○ 147 ●	
	Hole squeezing encountered - expansive soils						78 ○ 138 ● 87 ○ 141 ●	
	E.O.B: 3.0 m (target depth)		3 4 5				81 ○ 138 ●	

NOTES Groundwater was not encountered.
Hole squeezing encountered.
TS = Topsoil

LOGGED BY: CS & GW
DATE DRILLED: 17-May-21
DRILL METHOD 50 mm Hand Auger

WILEY GEOTECHNICAL LTD

BOREHOLE No. 2

SITE: Lot 81 The Sanctuary, Mangawhai

REF: 21076

Sheet 1 of 1

REDUCED LEVEL (RL) / INFERRED GEOLOGY	DESCRIPTION OF SOIL	SOIL SYMBOL	DEPTH (m)	SAMPLE TYPE	WATER CONTENT (%)	WATER LEVEL	CORRECTED VANE SHEAR STRENGTH (kPa) ●Peak Field Vane ○Remoulded Field vane 50 100 150	SCALA PENETROMETER BLOWS / 100 mm 5 10 15
TS	TOPSOIL dark brown							
Pakiri Formation of the Waitemata Group	SILT slightly clayey, slightly plastic, slightlty sandy, light brown with orange brown staining, desiccation cracks to 0.45 m						200	
							200	
	at 0.9 m increase in clay, increase in plasticity		1				81 ○ 138 ●	
	alternating clayey silts and sandy silts						48 ○ 105 ●	
	at 1.5 m hole squeezing, increase in moisture						63 ○ 105 ●	
			2				42 ○ 93 ●	
	E.O.B: 2.1 m (target depth)						84 ○ 132 ●	
			3					
			4					
			5					

NOTES Groundwater was not encountered.
Hole squeeze ar 1.5 m.

LOGGED BY: CS & GW
DATE DRILLED: 17-May-21
DRILL METHOD 50 mm Hand Auger

MiTek New Zealand Limited

Correspondence from : **AUCKLAND**
40 Neales Road, East Tamaki 2013
PO Box 58-014, Botany 2163
Phone: 09 274 7109
Fax: 09 274 7100

CHRISTCHURCH
14 Pilkington Way, Wigram 8042
PO Box 8387, Riccarton 8440
Phone: 03 348 8691
Fax: 03 348 0314

www.miteknz.co.nz

PRODUCER STATEMENT for MiTek 20/20® TRUSS DESIGN - Version 4.7

ISSUED BY: **MiTek New Zealand Limited**

TO: **ITM Warkworth**

IN RESPECT OF: **MiTek® Truss Designs**

This producer statement covers the MiTek 20/20® truss design and the structural performance of the GANG-NAIL® connector plate for the job reference **31122** and may be used by a Building Consent Authority to assist in determining compliance with the New Zealand Building Code.

The MiTek 20/20® truss design program has been developed by MiTek New Zealand Limited for the design of MiTek® timber roof, floor and attic trusses in New Zealand. The truss designs computed by MiTek 20/20 ® are prepared using sound and widely accepted engineering principles, and in accordance with compliance documents of the New Zealand Building Code and Verification Method B1/VM1; and internationally accepted standard ANSI/TPI 1 - 2002 as an alternative solution, to satisfy the requirements of Clause B1 of the New Zealand Building Code.

On behalf of MiTek New Zealand Limited, and subject to:

i) All proprietary products meeting their performance specification requirements
ii) The provision of adequate roof bracing and overall building stability
iii) Correct selection and placement of GANG-NAIL connector plates
iv) Correct input of Truss Design Data as shown in the Fabricator Design Statement for this job
v) The design being undertaken by the accredited fabricator under the terms of the software licence
vi) Timber is graded to the requirements of NZS 3603:1993
vii) Minimum timber treatment for these MiTek® trusses shall be in accordance with B2/AS1 Table 1A and the relevant sections of NZS 3602:2003

I believe on reasonable grounds that the trusses, if constructed in accordance with the MiTek 20/20® truss design and shop drawings, will comply with the relevant provisions of the New Zealand Building Code.

MiTek New Zealand Limited holds a current policy of Professional Indemnity Insurance no less than $500,000.

On behalf of MiTek New Zealand Limited, **Date: Sunday, 23 May 2021**



In Ling Ng, BE (Hons), CPEng, IntPE, MIPENZ (ID: 146585)
TECHNICAL SERVICES MANAGER, MiTek New Zealand Limited

Job: 31122 Client: Coastal Homes Site: Kendall
Phone: Lot 81 The Sanctuary
Description: Mangawhai
Building Consent No.: DP 556753 Phone:

MITEK FABRICATOR DESIGN STATEMENT

This statement is issued by MiTek accredited fabricator **ITM Warkworth**, being licensed to use the MiTek 20/20® software, to the client listed above and may be used by the Building Consent Authority to assist in determining compliance with the New Zealand Building Code.

MiTek 20/20® TRUSS DESIGN DATA

The MiTek 20/20® computer design for this job is based on the following design parameters entered into the program. The Fabricator shall ensure that these job details are current and relevant to the project for the design of the MiTek ® trusses.

Job Details Importance Level : 2 Design Working Life : 50 years

Roof Truss

Timber Group:	MSG8H1.2	Pitch:	25.000 deg	Nominal Overhang:	600 mm
Roof		**Ceiling**		**Wind**	
Material:	Metal Tiles	Material:	Rondo on clips	Area:	High (44.0 m/s)
Dead Load:	0.210 kPa	Dead Load:	0.200 kPa	Pressure Coeff:	Cpe = varies; Cpi = -0.30, 0.20
Restraints:	400 mm centres	Restraints:	1800 mm centres		
Live Load:	Qur = 0.250 kPa Qc = 1.100 kN	Live Load:	Qc = 1.400 kN		

The minimum timber treatment for these MiTek® trusses shall be in accordance with B2/AS1 Table 1A and the relevant sections of NZS 3602:2003. The timber for these MiTek® trusses shall be graded to the requirements of NZS 3603:1993. Proprietary fixings and timber connectors shall be selected in accordance with NZS3604:2011 Section 4 - Durability.

MiTek® Truss List

Legend: * = detail only, ? = input only, ~~Txx~~ = failed design, Ø = non certified, Unmarked trusses = designed successfully, LB = lateral bracing required
GB = gable brace required

Truss	Qty	Span (mm)	Pitch (deg)	Spacing (mm)	Truss	Qty	Span (mm)	Pitch (deg)	Spacing (mm)	Truss	Qty	Span (mm)	Pitch (deg)	Spacing (mm)
ET02	2	7365	25.000	900	J02B	1	2077	25.000	900	J07A	1	2038	25.000	900
PTG01	1	4045	0.000	900	J02C	1	2077	25.000	900	T04	3	6255	25.000	897
T01	1	6255	25.000	900	J03	1	2938	25.000	900	T04A	2	6255	25.000	897
T01A	1	6000	25.000	900	J03A	2	2938	25.000	900	T05	3	4235	25.000	900
T02	4	7365	25.000	900	J03B	1	3193	25.000	900	T07	1	6500	25.000	645
T02A	2	7365	25.000	900	J03C	1	3193	25.000	900	T12	1	7717	25.000	858
T03	1	7365	25.000	900	J03D	1	2938	25.000	900	TR01	1	4810	25.000	900
T06	1	6500	25.000	900	J03E	1	2938	25.000	900	V01	1	2662	17.500	900
T06A	1D	6500	25.000	900	J03F	1	2938	25.000	900	V02	1	5324	17.500	900
T08	1	6790	25.000	900	J03G	1	2938	25.000	900	V03	1	7060	17.500	900
T09	2	6790	25.000	900	J03H	2	2938	25.000	900	V04	1	1360	25.000	900
T10	1	9807	25.000	900	J04	1	3227	25.000	900	V05	1	1463	25.000	900
T11	5	9807	25.000	858	J04A	1	3227	25.000	900	V06	1	1800	25.000	900
T11A	8	9807	25.000	858	J04B	1	3227	25.000	900	V07	1	3600	25.000	900
T14	1	6265	25.000	897	J05	1	2327	25.000	900	V08	1	5400	25.000	900
T16	1	6265	25.000	897	J05A	1	2327	25.000	900	V09	1	7200	25.000	900
TR02	1	6790	25.000	900	J05B	1	2327	25.000	900	V10	1	971	25.000	900
ET01	1D	9680	17.500	900	J05C	1	2327	25.000	900	V11	1	1871	25.000	900
J01	1	2977	25.000	900	J06	1	1427	25.000	900	V12	1	1138	25.000	900
J01A	1	2977	25.000	900	J06A	1	1427	25.000	900	V13	1	1961	25.000	900
J01B	1	2977	25.000	900	J06B	1	1427	25.000	900	V14	1	2460	25.000	900
J02	1	2077	25.000	900	J06C	1	1427	25.000	900	V15	1	1489	25.000	900
J02A	1	2077	25.000	900	J07	1	2038	25.000	900					

Total quantity : 92

The computer design input has been carried out by:

Signed: .....

Date: ...Sunday, 23 May 2021....

Name of Detailer: .....Mike Ayers.....

Qualifications and Title: Designer (Mitek C.O.C. 10470)

On behalf of: ITM Warkworth

Job: 31122 Client: Coastal Homes Site: Kendall
Phone: Lot 81 The Sanctuary
Description: Mangawhai
Building Consent No.: DP 556753 Phone:

TRUSS FIXING SELECTION REPORT - Characteristic Loads

Fixings are selected from the LUMBERLOK Brochure 08/2014 (Timber Connectors Characteristic Loadings Data)

MiTek® Truss List

Legend: * = detail only, ? = input only, ~~Txx~~ = failed design, Ø = non certified, Unmarked trusses = designed successfully

Truss	Qty	Span (mm)	Joint	Down (kN)	Uplift (kN)	Bearing	Fixing Qty	Fixing Selected
ET02	2	7365	A	4.028	3.682	Cross	2	CT200 pair
			E	4.028	3.682	Cross	2	CT200 pair
PTG01	1	4045	E	4.879	6.270	Cross	1	CT200 pair
			H	4.235	5.360	Butt	1	JH 47x120
T01	1	6255	A	5.628	5.979	Cross	1	CT200 pair
			E	6.198	6.283	Cross	1	CT200 pair
T01A	1	6000	F	12.866	8.401	Cross	1	CT200 pair
			G	8.484	6.481	Cross	1	CT200 pair
T02	4	7365	B	4.377	3.739	Cross	4	CT200 pair
			F	4.377	3.739	Cross	4	CT200 pair
T02A	2	7365	A	4.020	3.676	Cross	2	CT200 pair
			E	4.391	3.742	Cross	2	CT200 pair
T03	1	7365	A	4.939	5.170	Cross	1	CT200 pair
			G	5.392	4.781	Cross	1	CT200 pair
T06	1	6500	A	6.374	6.836	Cross	1	CT200 pair
			E	6.739	6.902	Cross	1	CT200 pair
T06A	1D	6500	A	14.528	14.938	Cross	1	16kN Truss to Top Plate
			E	11.122	11.609	Cross	1	16kN Truss to Top Plate
T08	1	6790	H	8.956	11.159	Butt	1	JH 47x190
			C	7.073	7.442	Cross	1	CT200 pair
T09	2	6790	H	3.698	3.558	Butt	2	JH 47x90
			F	4.079	3.287	Cross	2	CT200 pair
T10	1	9807	I	3.041	3.465	Cross	1	CT200 pair
			K	7.654	3.006	Cross	1	Pair of Wire Dog Staples
T11	5	9807	M	7.623	2.883	Cross	5	Pair of Wire Dog Staples
			J	3.156	3.335	Cross	5	CT200 pair
T11A	8	9807	J	2.942	3.288	Cross	8	CT200 pair
			L	7.590	2.912	Cross	8	Pair of Wire Dog Staples
T14	1	6265	A	7.768	5.773	Butt	1	JH 47x120
			G	3.421	3.120	Cross	1	Pair of Wire Dog Staples
T16	1	6265	A	7.253	5.373	Butt	1	JH 47x120
			G	3.779	3.182	Cross	1	Pair of Wire Dog Staples
TR02	1	6790	H	3.698	3.558	Butt	1	JH 47x90
			E	4.078	3.288	Cross	1	CT200 pair
ET01	1D	9680	H	0.890	0.937	Cross	1	Pair of Wire Dog Staples
			O	0.851	0.882	Cross	1	Pair of Wire Dog Staples
			J	4.953	2.662	Cross	1	Pair of Wire Dog Staples
			M	4.375	2.265	Cross	1	Pair of Wire Dog Staples
J01	1	2977	F	2.946	2.048	Cross	1	Pair of Wire Dog Staples
			H	1.996	2.263	Butt	1	JH 47x90
J01A	1	2977	F	2.942	2.046	Cross	1	Pair of Wire Dog Staples
			H	1.977	2.259	Butt	1	JH 47x90
J01B	1	2977	F	2.663	1.094	Cross	1	Pair of Wire Dog Staples
			H	1.572	1.222	Butt	1	JH 47x90
			E	0.475	0.717	Cross	1	Pair of Wire Dog Staples
J02	1	2077	F	2.469	0.882	Cross	1	Pair of Wire Dog Staples
			H	1.161	0.815	Butt	1	JH 47x90
J02A	1	2077	F	2.468	0.758	Cross	1	Pair of Wire Dog Staples
			H	1.371	0.879	Butt	1	JH 47x90
			E	0.332	0.465	Cross	1	Pair of Wire Dog Staples
J02B	1	2077	F	2.469	0.882	Cross	1	Pair of Wire Dog Staples
			H	1.161	0.815	Butt	1	JH 47x90
J02C	1	2077	F	2.275	0.737	Cross	1	Pair of Wire Dog Staples
			H	1.391	0.888	Butt	1	JH 47x90
			E	0.316	0.462	Cross	1	Pair of Wire Dog Staples
J03	1	2938	F	2.654	1.080	Cross	1	Pair of Wire Dog Staples
			H	1.562	1.206	Butt	1	JH 47x90
			E	0.470	0.708	Cross	1	Pair of Wire Dog Staples
J03A	2	2938	G	2.622	0.775	Cross	2	Pair of Wire Dog Staples
			I	1.411	1.150	Butt	2	JH 47x90
			F	0.302	0.361	Cross	2	Pair of Wire Dog Staples
			E	1.047	1.571	Cross	2	Pair of Wire Dog Staples
J03B	1	3193	G	1.025	0.966	Butt	1	JH 47x90
			D	0.458	0.746	Cross	1	Pair of Wire Dog Staples
			E	2.729	0.204	Cross	1	Pair of Wire Dog Staples
J03C	1	3193	G	0.981	1.133	Butt	1	JH 47x90
			D	0.289	0.344	Cross	1	Pair of Wire Dog Staples
			C	0.899	1.475	Cross	1	Pair of Wire Dog Staples
			E	2.663	0.000	Cross	1	Pair of Wire Dog Staples
J03D	1	2938	G	2.613	0.965	Cross	1	Pair of Wire Dog Staples
			I	1.414	1.118	Butt	1	JH 47x90
			F	1.082	1.844	Cross	1	Pair of Wire Dog Staples
			E	2.127	2.152	Cross	1	Pair of Wire Dog Staples
J03E	1	2938	F	2.654	1.080	Cross	1	Pair of Wire Dog Staples
			H	1.562	1.206	Butt	1	JH 47x90
			E	0.470	0.708	Cross	1	Pair of Wire Dog Staples

Job: 31122 Client: Coastal Homes Site: Kendall
Phone: Lot 81 The Sanctuary
Description: Mangawhai
Building Consent No.: DP 556753 Phone:

Truss	Qty	Span (mm)	Joint	Down (kN)	Uplift (kN)	Bearing	---------- Fixing ---------- Qty	Selected
J03F	1	2938	G	2.622	0.775	Cross	1	Pair of Wire Dog Staples
			I	1.411	1.150	Butt	1	JH 47x90
			F	0.302	0.361	Cross	1	Pair of Wire Dog Staples
			E	1.047	1.571	Cross	1	Pair of Wire Dog Staples
J03G	1	2938	F	2.926	2.019	Cross	1	Pair of Wire Dog Staples
			H	1.924	2.198	Butt	1	JH 47x90
J03H	2	2938	H	2.622	0.517	Cross	2	Pair of Wire Dog Staples
			J	1.428	1.186	Butt	2	JH 47x90
			G	0.266	0.420	Cross	2	Pair of Wire Dog Staples
			E	1.009	1.487	Cross	2	Pair of Wire Dog Staples
			F	0.725	1.080	Cross	2	Pair of Wire Dog Staples
J04	1	3227	F	3.101	2.385	Cross	1	Pair of Wire Dog Staples
			H	2.436	2.803	Butt	1	JH 47x90
J04A	1	3227	F	3.094	2.383	Cross	1	Pair of Wire Dog Staples
			H	2.403	2.798	Butt	1	JH 47x90
J04B	1	3227	F	2.723	1.187	Cross	1	Pair of Wire Dog Staples
			H	1.638	1.324	Butt	1	JH 47x90
			E	0.508	0.773	Cross	1	Pair of Wire Dog Staples
J05	1	2327	F	2.631	1.479	Cross	1	Pair of Wire Dog Staples
			H	1.306	1.284	Butt	1	JH 47x90
J05A	1	2327	F	2.515	0.850	Cross	1	Pair of Wire Dog Staples
			H	1.439	0.982	Butt	1	JH 47x90
			E	0.363	0.520	Cross	1	Pair of Wire Dog Staples
J05B	1	2327	F	2.631	1.479	Cross	1	Pair of Wire Dog Staples
			H	1.306	1.284	Butt	1	JH 47x90
J05C	1	2327	E	1.394	0.788	Cross	1	Pair of Wire Dog Staples
			G	1.475	0.994	Butt	1	JH 47x90
			D	0.350	0.515	Cross	1	Pair of Wire Dog Staples
J06	1	1427	E	2.407	0.724	Cross	1	Pair of Wire Dog Staples
			F	0.618	0.328	Butt	1	Pair of 3.15d Nails
J06A	1	1427	E	2.407	0.724	Cross	1	Pair of Wire Dog Staples
			F	0.618	0.328	Butt	1	Pair of 3.15d Nails
J06B	1	1427	E	2.390	0.512	Cross	1	Pair of Wire Dog Staples
			F	0.417	0.041	Butt	1	Pair of 3.15d Nails
			D	0.440	0.898	Cross	1	Pair of Wire Dog Staples
J06C	1	1427	E	2.390	0.512	Cross	1	Pair of Wire Dog Staples
			F	0.417	0.041	Butt	1	Pair of 3.15d Nails
			D	0.440	0.898	Cross	1	Pair of Wire Dog Staples
J07	1	2038	F	2.462	0.868	Cross	1	Pair of Wire Dog Staples
			H	1.149	0.791	Butt	1	JH 47x90
J07A	1	2038	F	2.461	0.744	Cross	1	Pair of Wire Dog Staples
			H	1.360	0.863	Butt	1	JH 47x90
			E	0.327	0.456	Cross	1	Pair of Wire Dog Staples
T04	3	6255	A	3.388	3.115	Cross	3	Pair of Wire Dog Staples
			E	3.773	3.178	Cross	3	Pair of Wire Dog Staples
T04A	2	6255	A	3.405	3.119	Cross	2	Pair of Wire Dog Staples
			E	3.415	3.115	Cross	2	Pair of Wire Dog Staples
T05	3	4235	F	2.314	2.383	Cross	3	Pair of Wire Dog Staples
			I	3.037	1.565	Butt	3	JH 47x90
T07	1	6500	A	2.541	2.324	Cross	1	Pair of Wire Dog Staples
			E	3.009	2.372	Cross	1	Pair of Wire Dog Staples
T12	1	7717	P	0.691	1.047	Butt	1	JH 47x90
			K	6.538	1.417	Cross	1	Pair of Wire Dog Staples
			O	3.728	2.685	Cross	1	Pair of Wire Dog Staples
TR01	1	4810	F	2.608	2.569	Butt	1	JH 47x90
			I	3.721	1.978	Butt	1	JH 47x90
V01	1	2662	A			Wide		No fixing selected
V02	1	5324	A			Wide		No fixing selected
V03	1	7060	A			Wide		No fixing selected
V04	1	1360	A			Wide		No fixing selected
V05	1	1463	A			Wide		No fixing selected
V06	1	1800	A			Wide		No fixing selected
V07	1	3600	A			Wide		No fixing selected
V08	1	5400	A			Wide		No fixing selected
V09	1	7200	A			Wide		No fixing selected
V10	1	971	A			Wide		No fixing selected
V11	1	1871	A			Wide		No fixing selected
V12	1	1138	A			Wide		No fixing selected
V13	1	1961	A			Wide		No fixing selected
V14	1	2460	A			Wide		No fixing selected
V15	1	1489	A			Wide		No fixing selected

Fixing List

Qty	Selected Fixing
43	CT200 pair
3	JH 47x120
2	16kN Truss to Top Plate
1	JH 47x190
36	JH 47x90
96	Pair of Wire Dog Staples
4	Pair of 3.15d Nails
15	No fixing selected

Job: 31122
Client: Coastal Homes
Phone:
Site: Kendall
Lot 81 The Sanctuary
Mangawhai
DP 556753
Description:
Building Consent No.:
Phone:

Note:

1) Fixings have been selected based on loading only. Please check that selected fixings are practical for each situation and that appropriate nailing can be applied on site.
2) Fixings are selected from the LUMBERLOK Brochure 08/2014 (Timber Connectors Characteristic Loadings Data) with down and uplift characteristic loads of at least the values shown for each joint.

Job: 31122
Client: Coastal Homes
Phone:
Site: Kendall
Lot 81 The Sanctuary
Mangawhai
DP 556753
Description:
Building Consent No.:
Phone:

TRUSS BEARINGS EXCEEDING 10KN REPORT - Ultimate Limit State Loads

MiTek® Truss List

Legend: ? = input only, ~~Txx~~ = failed design, Ø = non certified, Unmarked trusses = designed successfully

Critical Trusses	Qty	Span (mm)	Joint	Bearing Reactions (kN) Down	Uplift
T06A	1D	6500	A	10.713	11.950

Note:

1) Select appropriate Slab Thickening Detail from the MiTek 'Internal Load Bearing On Concrete Floor Slabs' brochure.

Truss Fixings

X - LUMBERLOK JH47x90 Joist Hanger
Z - LUMBERLOK JH47x120 Joist Hanger
P - LUMBERLOK JH47x190 Joist Hanger
E - LUMBERLOK JH95x165 Joist Hanger
O - Pair of LUMBERLOK CT200 Ceiling Ties
H - LUMBERLOK CT400 Cyclone Tie
B - LUMBERLOK CT600 Cyclone Tie
M - Pair of LUMBERLOK Multi Grips
NP - LUMBERLOK Nailon Plate
N - LUMBERLOK N21 Diagonal Cleat
W - Pair LUMBERLOK CPC40 Cleats
K - LUMBERLOK TTP 16kN Truss to Top Plate set
S - Single LUMBERLOK CPC40 Cleat

Roof Bracing

Refer to:
LUMBERLOK Roof Bracing Specifications
Brochure 08/2006 foe end fixing details.

The brace must be locatedsuch that it forms
an angle of 45° +- 5° to the wall.

NOTES:

All other areas must have a minimum of a pair of 90mm skew nails & a pair of wire dogs for truss to top plate connections.
Refer to:
LUMBERLOK Timber Connectors Characteristic Loadings Data brochure 03/4

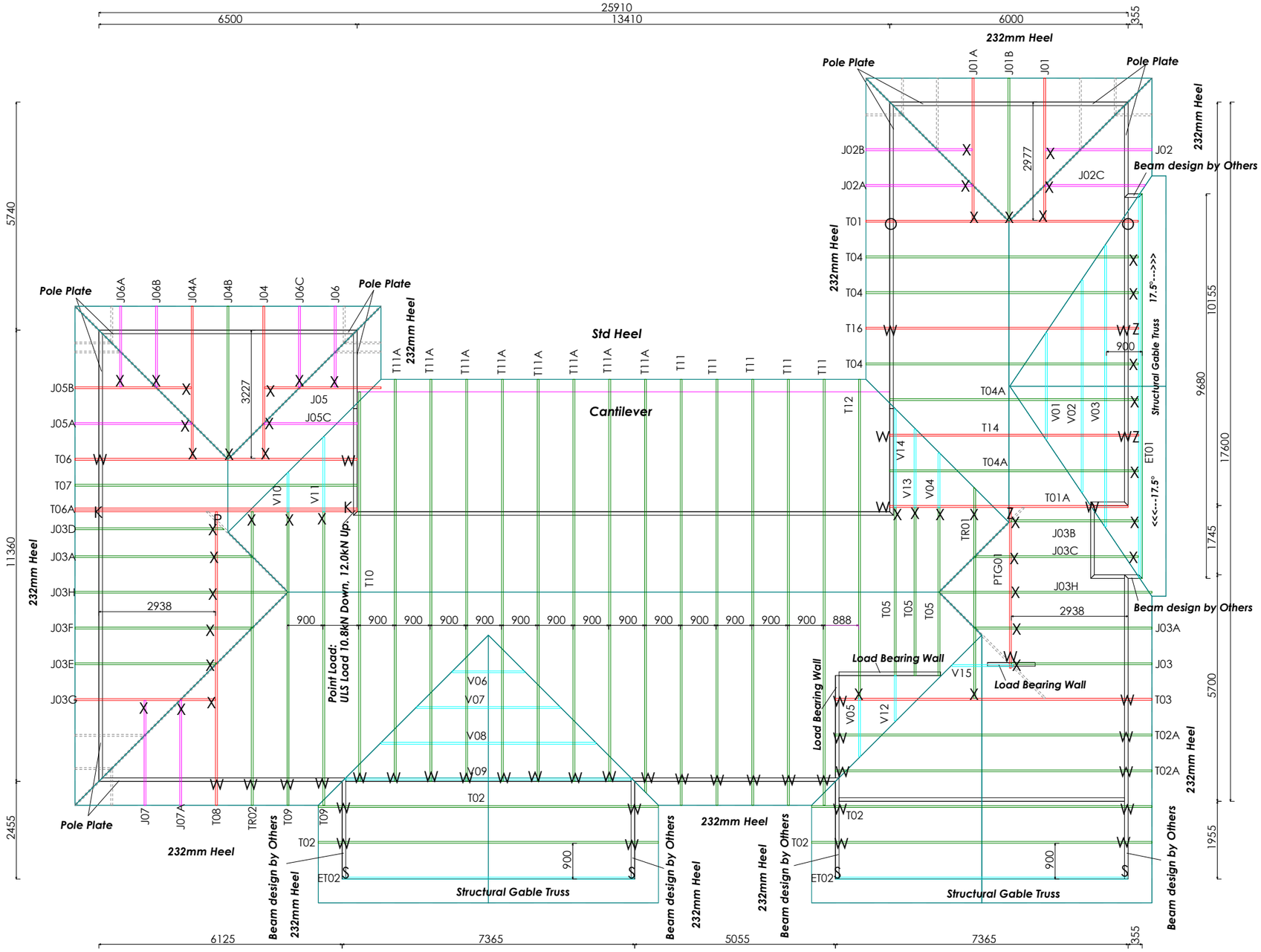

Buildable Truss Layout Notes:

This buildable truss layout and associated design statements are for building consent purposes only and should not be used for construction without Timberworld Ltd or MiTek New Zealand certification.

This is a preliminary design that may change at the time of manufacture.

Any additional design requirements for the structure under load bearing points and/or any additional load bearing walls are not covered within the design and require a seperate design to be provided by the designer/engineer unless stated otherwise within this design.

Roof Bracing instruction by other or as per "Section 10 NZS 3604:2011.

Copyright - These drawings are the property of ITM Warkworth Ltd.

This layout should be read in conjunction with the designers / engineering drawings.

These trusses have NOT been designed to carry any hot water cylinders, air conditioning units, roof storage, solar panels and/or any other such loads.

This layout and associated PS1 statement is to be superseded by a manufactured design and roof framing layout at the time of construction.

IF IN DOUBT PLEASE ASK, DON'T GUESS!

Bottom Chord Lateral supports Required at 1800mm ctrs

PrimeCad v4.7.301

MANGAWHAI WARKWORTH

Site Address :
Kendall
Lot 81 The Sanctuary
Mangawhai
DP 556753

Sheet Title :
For Building Consent
Buildable Truss Layout

Date : 23 May,2021 | Drawn : Mike Ayers
Scale : NTS | System : MiTek 20/20

Job Details:
Roof Pitch : 25.0 & 17.5 deg
Roof Material : Metal Tiles
Ceiling Material : Rondo on clips
Wind Zone : High
Roof Snow Load : 0.000kPa

Truss Centres : 900mm
Roof Live Load : 0.250kPa
Floor Live Load : kPa
Wind Speed : 44m/s

MiTek™

Job Title :
31122
Sheet :
1
Revision Number :

28 June 2021

Client: Linda & David Kendall
linda.kendall@xtra.co.nz

WGL 21076

On-site 'secondary' wastewater treatment / disposal system for a four-bedroom house at Lot 81, The Sanctuary, Mangawhai.

Introduction

This document is to form part of building consent application for the construction of a four-bedroom house at Lot 81, The Sanctuary, Mangawhai. Lot 81 DP 556753 (5,901m^2). Title and floor plan attached.

This report outlines the design and technical specifications for the on-site wastewater treatment and disposal system and ensures the chosen wastewater system meets all the relevant requirements from the Proposed Regional Plan for Northland, section C.6.1 (PRPN), Kaipara District Council as outlined in AS/NZS 1547:2012 and G13/VM4 On-site disposal B2 (durability 15 years) of the NZ building code.

Site Assessment

Wiley Geotechnical Ltd (WGL) visited the site on and made the following observations:

Wiley Geotechnical Ltd (WGL) visited the site on the 14th of May 2021 and made the following observations:

- Lot 81 is part of a south to south east and east facing slope.
- A hand auger investigation was undertaken within a potentially suitable effluent field site adjacent to the eastern corner of the property. Slope is 8 degrees to the south and east.
- A culvert (dry) was observed at the top of the slope.
- No obvious signs of instability were noted.
- The proposed effluent field will be upslope from covenanted areas 'D' and 'A' and at least 15m above a wetland area within these covenanted areas.
- No evidence was seen or heard of the site being used for activities which could have led to site contamination.

Geological Investigation

The GNS geological unit QMAP shows the soils at the proposed site of the effluent field as being Pakiri Formation of the Waitemata Group. A geotechnical report for subdivision was undertaken by Hawthorn Geddes in August 2019. This report deems the soils to be very poorly drained clays, or Category 5 and a DiR of 2.8 mm/day. Our borehole investigation was consistent with this.

Design Recommendations

Re AS/NZS 1547:2012

A four-bedroom house equates to a six-person occupancy, with roof collection of potable water and standard water fixtures installed in the house including an automatic washing machine daily effluent amounts to 180L/day/person (table H3). 6 x 180L = 1080L/day.

1080/day/2.8 = 386. **Effluent Field = 386m².**

The owner has decided to install a 'TXR-1' secondary wastewater system using a textile filtration system. The TXR-1 is manufactured and distributed by Duracrete in Whangarei. Maximum daily flow for a TXR-1 is 2000L/day the emergency storage is 1500L. The unit has three settings, 900L/day, 1200L/day and 1500L/day effluent flows, technical specifications and OSET results attached.

The effluent field is to be mole ploughed into the topsoil at a depth of at least 150mm. Where topsoil is less than 200mm extra topsoil will need to be added. A likely source of this extra topsoil is from the house excavation. Effluent field is to be at least 1.5m off any boundary, 15m from any water body/course and 5m from any stormwater flow path downslope of the effluent field. The effluent field is to be installed on slopes under 10^0.

A reserve area is required to be made available in case of effluent field failure, the minimum size to be 30% of the effluent field size. **Reserve = 386 x 0.3 = 116, reserve = 116 m².**

The culvert discharging at the top of the slope will need to be diverted away from the effluent field with the outlet at least 5m below the lowest dripper line. Hawthorn Geddes have a draft plan for this (see attached). This will also act as a surface water diversion drain, directing any stormwater coming from the road and slopes above the effluent field away from the effluent field.

As impervious area is under 10% then attenuation of stormwater is not required. Stormwater overflow from the rain water tanks to be taken to an in-ground dispersal trench, location to be below the lowest dripper line and at a point so as not to cause instability. Total roof area is 405.45m^2 so length of in-ground trench to be 18m, as per fig 21 attached.

Any runoff from driveways should preferably be evenly spread across adjacent grass or into a grassed swale drain so as to abstract heavy metals and other pollutants before entering a watercourse. Piped discharge directly into a watercourse is not accepted these days as it adds to risk of pollution and to peak flood flow and scour of stream banks etc.

Key Environmental Effects

- **The Impact on ground-water *quantity*** from the system will be close to zero as no more water will arrive on the Lot as supply is roof-water, and effluent will be taken up by the grass on the effluent field and stimulate growth. Ground water *quality* will be protected by these taking up the nutrients (nitrates and phosphates) and by micro-organisms in the soil digesting any *e coli*.
- **The Impact on surface-water.** The amount of surface water run-off will be reduced by the increased vegetative growth. Some of the surface water will be taken up by the grass. The extra grass will provide a protective layer above the soils reducing erosion in times of heavy rainfall. The flow on effect is an improvement of **water quality** down-stream. Having some of the roof water applied to the effluent field on fine days will even out the application of water to the ground on the Lot, thereby tending to reduce peak flows to ground. This is a desirable effect.
- **The Impact on soils.** The effect on the soils will be beneficial as the nutrients will not only promote plant growth but also increase the micro-biological activity in the soils themselves and slowly convert any inorganic clays to organics. The topsoil depth will therefore increase over the years as the subsoils become more organic. Less topsoil can be washed away by heavy rain as it is protected by the increased grass growth. The soils will benefit from the aeration from the installation of the dripper lines.

- **The Impact on Amenity Values.** The effects to flora will be positive in that the adjacent trees will get added nutrients and moisture. The effects on fauna will also be positive in that the boosted tree and grass growth will provide a habitat attractive to birds, insects and people. Not only will this support local diversity, it will create a more pleasantly aesthetic setting for residents and neighbours.

Mitigation Measures

- **Potential odour and noise**
  When the irrigation pump operates a very small noise can be heard as the effluent fills the dripper lines. The sound is negligible. When operating correctly the system is odorless.

- **Measures to protect against system failure**
  In the case of a mechanical failure, a high-level float is installed in the irrigation chamber with a visible alarm on the control box. This will allow plenty of time to rectify any faults with plenty of emergency storage available (1500L). In the case of a dripper line failure in the effluent field, a greater than 116m2 (30%) reserve area is available.

- **Previous site use.**
  No evidence was seen or heard of the site being used for activities which could have led to site contamination.

- **Maintenance plan**
  An annual service is recommended for all secondary wastewater systems. This is to be organized by the owner before COC is issued. The owner is also required to clean the 130 micron arkal filter every three months or so.

Items not to be flushed

- No bleaches or chlorine (i.e. Napisan – Bleach – Janola). These products are designed to kill bugs and will kill off the bacteria in the tank causing smells and constant blocking of the Bio (internal) filter. You can use these products if used in a bucket and tip on the lawn or safe place, not down your drain
- **No fats or oils down drains.** Fats and oils may block the tank filters and kill the bacteria in the tank.
- No tea leaves or coffee grounds down drains. These may block the filters in the tank and the external filter.
- No washing paint brushes or disposing of paints down drains. These products will not only kill bacteria in the tank, but the residue is very difficult and costly to remove.
- No disposable nappies, sanitary napkins, tampons or condoms. These products do not break down and cause a mass build up in the tank, and can cause blockages that can be costly to clean.
- Do not have a waste disposal unit. This waste takes a long time to break down and the system will require frequent emptying which is very costly.
- Use low sudsing laundry powder/liquid and non-caustic dish washing powder.

Wastewater Summary for Drainlayer

1 Install a TXR-1 wastewater system approved to AS/NZS 1547:2012 standards, at least 3m away and downhill from the house.

2 Mole plough into the topsoil (at least 150mm deep) 386m^2 of pressure compensating drip irrigation line with an emitter flow rate of 1.6lph, 500mm dripper spacing and 1.0m spacing between laterals. At no point should the lines be closer than, 1.5m from any boundary or on slopes over 10^0, see wastewater site sketch for location.

3 Where the existing topsoil is under 200mm deep extra topsoil will need to be added. The topsoil from the house excavation a possible source.

4 System to be installed and maintained as per manufacturers recommendations, including regular de-sludging of the primary treatment tank and dripper line flush.

5 Once the system is operational obtain a commissioning statement from the drainlayer who installed it and send it to the supplier to obtain a warranty.

6 Stormwater overflow from the rain water tanks to be taken to an inground dispersal trench downslope and north of the house. Length of in-ground trench to be 18m. Design as per fig C21 attached.

7 Ensure a service contract is in place.

I trust that this information meets your current requirements. Please do not hesitate to contact the undersigned on 09 421 5353 or cam@wileygeotechnical.co.nz if you require any further information.

Report prepared by:





Cameron Shaw

Wastewater Designer reg 3298

Matt Wiley, CPEng

Principal Engineer

PROPOSED OPEN DRAIN TO DIVERT STORMWATER FROM ROBERT HASTIE DRIVE

THIS DRAWING WAS PRODUCED IN COLOUR. DO NOT USE FOR CONSTRUCTION PURPOSES IF THIS NOTE IS IN BLACK & WHITE

NOTE:
SITE INFORMATION ADAPTED FROM SURVEY DRAWING PROVIDED BY TERRA CONSULTANTS REFERENCE SC106;
ALL INFORMATION MUST BE CONFIRMED ON SITE;
TO BE READ IN CONJUNCTION WITH HAWTHORN GEDDES ENGINEERS & ARCHITECTS LTD REPORT REFERENCE 10737

DRAFT

Approximate position of headwall- construct outlet protection (grouted rock spalls) to direct flow into rock-lined drain

14.97m

Existing culvert under Robert Hastie Drive

Construct approx 80m of rock-lined roadside drain.

outlet to wetland

LOT 81

LOT 8

N

20.0 19.0 18.0 17.0 16.0 15.0 13.0 12.0 11.0 10.0 9.0 8.0 7.0 6.0 6.6 6.8 8.0 9.0 10.0 11.0 12.0 13.0 14.0 15.0 16.0 17.0 18.0 9.4 9.2 9.0 8.8 8.6 8.4 8.2

USE WRITTEN DIMENSIONS. DO NOT SCALE FROM DRAWING.

© HAWTHORN GEDDES ENGINEERS & ARCHITECTS LTD (HGE&A)
THE COPYRIGHT OF THIS DRAWING IS THE PROPERTY OF HGE&A.
REPRODUCTION OF THIS DESIGN OR DRAWING IS NOT PERMITTED UNLESS PERMISSION IS OBTAINED FROM HGE&A.

Hawthorn Geddes
engineers & architects ltd

7 Selwyn Avenue
Whangarei 0110
Phone: 09 438 7139
hg@hgcs.co.nz

Unit 21a, The Grange
Warkworth 0910
Phone: 09 283 3428
www.hawthorngeddes.co.nz

CLIENT SANCTUARY NORTH LTD

PROJECT JOAL CONSTRUCTION & LAKEVIEW LANE WIDENING
97 & 71 ROBERT HASTIE DRIVE,MANGAWHAI

DRAWING LOCALITY PLAN

REV.	REVISION DETALS	BY	DATE
R1	ISSUED FOR ENGINEERING PLANNING APPROVAL	MS	21/09/20

APPROVAL DRAFT

PROJECT No. 10737

SCALE @ A3 1:500

SHEET

REV. R1

16/12/2020 3:05:23 PM K:\10737 Duck Trust Subdivision Suitability Lots 1 & 2 Robert Hastie Drive Mangawhai\Tender set & Engineering approval set\10737 200915 Engineering Approval Set.dwg

Figure C21
Conceptual Layout of Flow Dispersal Trench

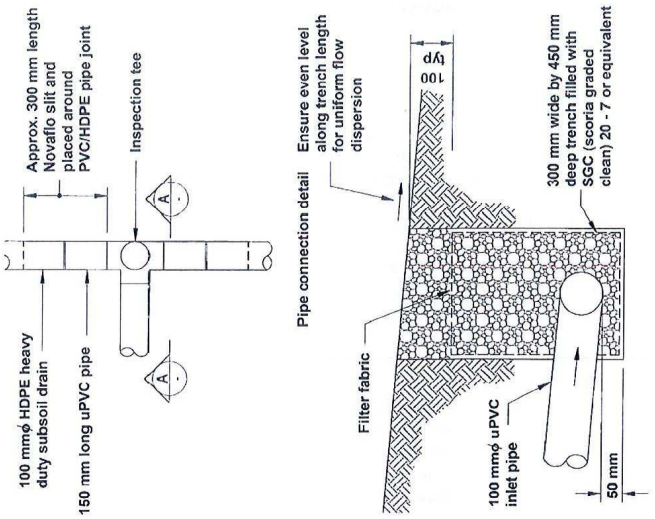

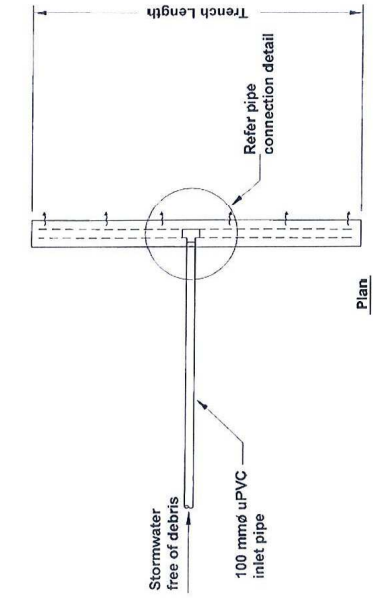

Plan

Keep dispersal trench 30 m clear of property boundary

Design Parameters

Effective catchment area drained (m^2)	Trench Length (m)
100	8
200	12
300	14
400	16
500	18
600	20

(Note: effective catchment area drained = impervious area + 0.72 x pervious area

Wiley Geotechnical Ltd

Client: Linda & David Kendall
linda.kendall@xtra.co.nz

WGL 21076

On-site 'secondary' wastewater treatment / disposal system for a four-bedroom house at Lot 81, The Sanctuary, Mangawhai.

Wastewater Site Sketch

386m2 eff field. To be mole ploughed.

116m2 reserve area.



KAIPARA DISTRICT

Kaipara te Oranganui • Two Oceans Two Harbours

KAIPARA DISTRICT COUNCIL

Producer Statement

Design: On-Site Effluent Disposal Systems (AS/NZS 1547:2012)

Issued by: Cameron Shaw (approved qualified design professional)

To: Linda & David Kendall (owner)

To be supplied to: Kaipara District Council

Property Location: Lot 81 'The Sanctuary', Mangawhai.

Lot 81 DP 556753 Valuation Number

To Provide: Design an onsite effluent disposal system that will comply with the principles and procedures of AS/NZS 1547:2012 and provide a schedule to the owner for the system's maintenance.

The Design: Has been designed in accordance with Verification Method G13/VM4 On-Site Disposal and B2 (durability 15 years) of the Building Regulations 1992 in Compliance with the New Zealand

Building Code

As an independent approved design professional covered by a current policy of Professional Indemnity Insurance (Design) to a minimum value of $200,000, **I believe on reasonable grounds** that subject to:

1 Site verification – An Installation and commissioning report verifying the system and all components have been installed and operate in conformity with the design is required upon completion in accordance with 6.2.5.4, AS/NZS1547(2012).

2 The proposal All proprietary products met the performance requirements. the proposed design will meet the re levant provisions of the Building Code and Northland Regional Council discharges rules.

☐ I understand and accept that Council may rely on this document, for the purposes of establishing compliance with the above building consent and that the content including the signature, whether electronic or not, is truly representative and authoritative of the information contained.

Digitally signed by Cameron Shaw
DN: C=US, E=csmangawhai@gmail.com, O=Wiley Geotechnical Ltd, OU=Wastewater Design, CN=Cameron Shaw
Date: 2019.10.17 09:01:50+13'00'

Cameron Shaw (Signature of approved design professional)

BSc, Approved WW designer (Professional qualifications)

3298 (Licence Number or professional Registration number)

Address Unit 4, 6 Molesworth Drive, Mangawhai

Telephone Number 09 4315353 Fax Number

Cellphone Date 31/05/2021

KAIPARA DISTRICT

Kaipara te Oranganui • Two Oceans Two Harbours

KAIPARA DISTRICT COUNCIL

Note: This form is to accompany every application for a Building Consent incorporating AS/NZS 1547:2012 Approval as a design professional is at Council's discretion.

Kaipara District Council

AS/NZS 1547:2012

On-site Wastewater Disposal Site and Soil Evaluation

KAIPARA DISTRICT

Part A: Owners Details

1 Applicant Details:

Applicant Name	Linda & David Kendall	
Company Name		
	First Name(s)	Surname
Property Owner Name(s)	ACDL trustee Ltd	
Nature of Applicant*	Director	

*(*i.e. Owner, Leaser, Prospective Purchaser, Developer)*

2 Consultant / Site Evaluator Details:

Consultant/Agent Name				
Site Evaluator Name	Cameron Shaw			
Postal Address	Unit 6, 4 Molesworth drive Mangawhai			
Telephone Number	Business	094315353	Private	
	Mobile		Fax	
Name of Contact Person				
E-mail Address	cam@wileygeotechnical.co.nz			

3 Are there any previous existing discharge consents relating to this proposal or other waste discharge on this site?

Yes		No	✔	Please tick
If yes, give reference numbers and description				

KAIPARA DISTRICT

4 List any other consent in relation to this proposal site and indicate whether or not they have been applied for or granted

If so, specify Application Details and Consent Nº.

(E.g. Land Use, Water Take, Subdivision, Earthworks Stormwater Consent)

Part B: Property Details

1 Location Details

Physical Address of Property	Lot 81, The Sanctuary, Mangawhai.
Territorial Local Authority	**Kaipara District Council**
Regional Council	**Northland Regional Council**
Legal Status of Activity	Permitted: ✔ Controlled: ☐ Discretionary: ☐
Relevant Regional Rule(s)	Proposed Regional Plan for Northland, section C.6.1
Total Property Area (m²)	5,901 m2
Map Grid Reference of Property if Known	36 04 38.11S 174 34 02.10E

2 Legal description of land (as shown on Certificate of Title)

Lot Nº	81	DP Nº	556753	CT Nº	
Other (specify)					

Please ensure copy of Certificate of Title is attached.

KAIPARA DISTRICT

Part C: On-Site Evaluation

(Refer AS/NZS 1547:2012 See Appendix D)

Has a relevant property history study been conducted?

Yes		No	✔

(Please tick one)

If yes, please specify the findings of the history study, and if not please specify why this was not considered necessary.

would have been covered in hawthorn and geddes subdivision report.

job 4819 H & G 7/7/2008

1 Has a Slope Stability Assessment been carried out on the property?

Yes		No	✔

If **No**, why not?

effluent field on moderate slopes

Please tick

If **Yes**, please give details of report (if possible, please attach report):

Author	
Company/Agency	
Date of Report	
Brief Description of Report Findings:	

KAIPARA DISTRICT

2 Site Information (See Table 1 attached):

Provide descriptive details below:
Performance of Adjacent Systems: secondary
Estimated Rainfall and Seasonal Variation:
Information available from **N.I.W.A MET RESEARCH**
Vegetation / Tree Cover: grass
Slope Shape: (Please provide diagrams) waxing plannar
Slope Angle: 8 degrees max
Surface Water Drainage Characteristics: downhill to South and east.
Flooding Potential: **Yes** ☐ **/ No** ☐
If **Yes**, specify relevant flood levels on appended site plan i.e. one in five years and/or 20 year and/or 100 year return period flood level, relative to disposal area.
Surface Water Separation: 20m to wetland
Site Characteristics: or any other limitation influencing factors proximity to boundary.

3 Site Geology Check Rock Maps

Pakiri Formation of the Waitemata Group	
Geological Map Reference Number	NZL GNS

4 What Aspect(s) does the proposed disposal system face? (please tick)

North	☐	**West**	☐
North-West	☐	**South-West**	☐
North-East	☐	**South-East**	✓
East	✓	**South**	☐

KAIPARA DISTRICT

5 Site clearances (Indicate on site plan where relevant)

Separation Distance from	Proposed Clearances (m)	Septic Tank Treated Allowed(KDC+	Secondary Treated Allowed (KDC+NRC)
Boundaries	1.5	1.5 m	1.5 m
Surface water (i.e. permanent or intermittently flowing rivers, creeks,	20m		15m
Groundwater Bores horizontal distance	NA	20 m	20 m
Subsurface water vertical separation	>1.2		
Embankments/retaining walls	NA	1.5 m	1.5 m
Other			
Reserve area set aside	30%	100 %	30 %

Part D: Site Assessment - Subsoil Investigation

(Refer AS/NZS 1547:2012 clause D2, Appendix D Site-and-Soil for Individual Lots

1 Please identify the soil profile determination method:

Test Pit		(Depth_____m)	Nº of Test Pits	
Bore Hole	1	(Depth_____m)	Nº of Bore Holes	1
Other (specify):				

Soil Report attached?

Yes	✔	No	

Please tick

2 Was fill material intercepted during the subsoil investigation?

Yes		No	

Please tick

If yes, please specify the effect of the fill on wastewater disposal

KAIPARA DISTRICT

3 Percolation testing (Soil Permeability) (Recommended for conventional trenches in all clay soils)

Please specify the method (refer to Appendix G AS/NZS 1547:2012					
Test Report Attached?	Yes	☐	No	☐	Please tick

4 Are surface water interception/diversion drains required?

Yes	✔	No	☐	Please tick

If yes, please show on site plan

4a Are subsurface drains required

Yes	☐	No	☐	Please tick

If yes enter details

5 Please state the depth of the seasonal water table:

Winter	1.2	m	Measured	✔	Estimated	☐
Summer	>1.2	m	Measured	☐	Estimated	✔

6 Are there any potential storm water short circuit paths?

Yes	✔	No	☐	Please tick

If the answer is yes, please explain how these have been addressed

shallow surface water drain above effluent field

divert culvert

7 Estimated soil category *(Refer AS/NZS 1547:2012 (See E4.1 and Table E1)*

Is Topsoil Present? 5	If so, Topsoil Depth? 0.15 (m)

Classification	Properties	Tick One
Sand	Very little to no coherence, cannot be molded., single grains	☐
Loamy sand	Slightly coherence, give a short ribbon 5mm that breaks easy	☐
Sandy loam	Forms a cast but will not roll in a ball. Individual sand grains can be seen	☐
Fine sandy loam	As for Sandy loam. Individual sand grains cannot be seen	☐
Loam	As for Sandy loam. But cast feels spongy	☐
Silty loam	As for loams but not spongy. Very smooth and silky	☐
Sandy clay loam	Can be rolled into a ball. Sand grains can be felt	☐
Fine sandy clay Loam	As for sandy clay loam but no sand grains visible	☐
Clay loam	Can be rolled into a ball with spongy feel, slightly plastic	☐
Silty clay loam	As for clay loams but not very spongy. Very smooth and silky	☐
Sandy clay	Forms a plastic ball in which sand grains can be seen, felt and heard	☐
Light clay	Smooth plastic ball that can be rolled into a rod. Slight resistance to shearing	✓
Silty clay	As for light clay but very smooth and silky	✓
Medium clay	Smooth plastic ball like plasticine. Can be moulded. Some resistance to ribboning	☐
Heavy clay	Smooth plastic ball like plasticine. Can be moulded. Firm resistance to ribboning	☐

Reasons for placing in stated category

Geotechnical report conducted by Hawthorn Geddes in August 2019. report 4819, 7/7/2008

PART E: Discharge Details

1 Water supply source for the property (please tick):

Rainwater (roof collection)	✓
Bore/well	☐
Public supply	☐

KAIPARA DISTRICT

2 Calculate the maximum daily volume of wastewater to be discharged, unless accurate water meter readings are available

(Refer AS/NZS 1547:2012 See 5.5.5 and Appendix L, M and N

Number of Bedrooms	1 - 2 - 3 - 4 - 5 - 6			4
Design Occupancy	6			(Number of People)
Per capita Wastewater Production	140	160	180	(tick) (Litres per person per day)
Other - specify	200	220	180	
Total Daily Wastewater Production	1080			(litres per day)

3 Do any special conditions apply regarding water saving devices

A) Full water Conservation Devices?	Yes	☐	No	✔	Please tick
b) Water Recycling – what %?	%	☐	No	☐	Please tick

If you have answered yes, please state what conditions apply and include the estimated reduction in water usage.

Standard water fixtures including an automatic washing machine.(H3) 180L/day/person

4 Is Daily Wastewater Discharge Volume more than 3000 litres per day:

Yes	☐	Please tick
No	✔	Please tick

Note if answer to the above is yes, an N.R.C wastewater discharge permit will be required

KAIPARA DISTRICT

PART F: Primary Treatment

(Please also refer to NRC rules)

1 Please indicate below the no. and capacity (litres) of all septic tanks including type (single/dual chamber grease traps) to be installed or currently existing: If not 4500 litre dual chamber, explain why not.

Number of Tanks	Type of Tank	Capacity of Tank (Litres)
	Total Capacity	

2 Type of Septic Tank Outlet Filter to be installed?

(min 3.5mm screen required see NRC rules)

Azud 130 micron final filter

PART G: Secondary and Tertiary Treatment

(Please also refer to NRC rules)

1 Will the discharge effluent have a 5-day biochemical oxygen demand (BOD5) that is less than or equal to 30 grams per cubic metre and the total suspended solids (TSS) concentration that that is less than or equal to 45 grams per cubic metre?

(Manufacturers specifications required see NRC rules)

Yes	☐	No	☐	(Please tick)	No means this is considered a primary system

KAIPARA DISTRICT

2 Please indicate the type of additional treatment, if any, proposed to be installed in the system: (please tick)

Secondary Treatment	✔		
Home aeration plant			
Commercial aeration plant			
Intermediate sand filter			
Recirculating sand filter			
Recirculating textile filter	✔		
Clarification tank	✔		
Tertiary Treatment			
Ultraviolet disinfection			
Chlorination			
Other		Specify	

PART H: Land Disposal Method

(Refer AS/NZS 1547:2012 appendices L, M and N)

1 Please indicate the proposed loading method: (please tick)

Gravity	
Dosing Siphon	
Pump	✔

2 High water level alarm to be installed in pump chamber(s)

Yes	✔	No	

If not to be installed, explain why.

3 If a pump is being used, please provide the following information:

Total Design Head	32	(m)
Pump Chamber Volume	700	(Litres)
Emergency Storage Volume	1500	(Litres)

KAIPARA DISTRICT

4 Please identify the type(s) of land disposal method (land application systems) proposed for this site: (please tick)

(Refer AS/NZS 1547:2012 appendix K)

Surface Dripper Irrigation			
Sub-surface Dripper irrigation	✔		
Standard Trench			
Deep Trench			
Mound			
Evapo-transpiration Beds			
Other		Specify	

5 Please identify the loading rate you propose for the option selected in the above, stating the reasons for selecting this loading rate:

(Refer to AS/NZS 1547:2012 appendix L)

Loading Rate 2.8mm/m2/day		(Litres/m2/day)
Disposal Area 502	Design 386	(m2)
	Reserve 116	(m2)

Explanation

6 (people)x 180L = 1080/2.8 = 386m2 eff field. 386 x 30% = 116m2 reserve area.

KAIPARA DISTRICT

6 What is the available reserve wastewater disposal area?

Reserve Disposal Area (m²)	116m2
Percentage of Primary Disposal Area (%)	30

7 Please provide a detailed description of the design and dimensions of the disposal field and attach a detailed plan of the field relative to the property site:

Description and Dimensions of Disposal Field:

see wastewater site sketch

Plan Attached?	Yes	✓	No		Please tick

If not, explain why not

PART I: Maintenance & Management

(Please also refer to NRC rules)

1 Has a maintenance agreement been made with the treatment and disposal system suppliers?

Yes		No	✓	Please tick

Name of Suppliers

Duracrete. owners responsibility to negotiate maintenance contract. Needed for warranty.

KAIPARA DISTRICT

PART J: Assessment of Environmental Concerns

1 Is an assessment of environmental concerns included with application? *(Refer Fig 4.1C3)*

Yes	✔	No		Please tick

If Yes, list and explain possible effects

see attached

PART K: Is Your Application Complete?

1 Is a Northland Regional Council Discharge Consent Required?

Yes		No		Please tick

2 In order to provide a complete application you have remembered to:

Fully Complete this Assessment Form	yes
Include a *Location Plan* and *Site Plan* (with Scale Bars)	yes
Attach an Assessment of Environmental Concerns	yes

3 Declaration

☐ I understand and accept that Council may rely on this document, for the purposes of establishing compliance with the above building consent and that the content including the signature, whether electronic or not, is truly representative and authoritative of the information contained.

I hereby certify that, to the best of knowledge and belief, the information given in this application is true and complete.

Name	Matt Wiley	Signature	Matt Wiley Digitally signed by Matt Wiley DN: C=NZ, E=matt@wileygeotechnical.co.nz, OU=Wiley Geotechnical Ltd, CN=Matt Wiley Date: 2020.05.04 08:51:24+12'00'
Position	CPENG	Date	01 June 2021

Note:

Any alteration to the site plan or design after approval will result in non-compliance.

An Installation and commissioning report verifying the system and all components have been installed and operate in conformity with the design is required upon completion in accordance with 6.2.5.4, AS/NZS1547(2012)is required before the Code Compliance Certificate can be issued.

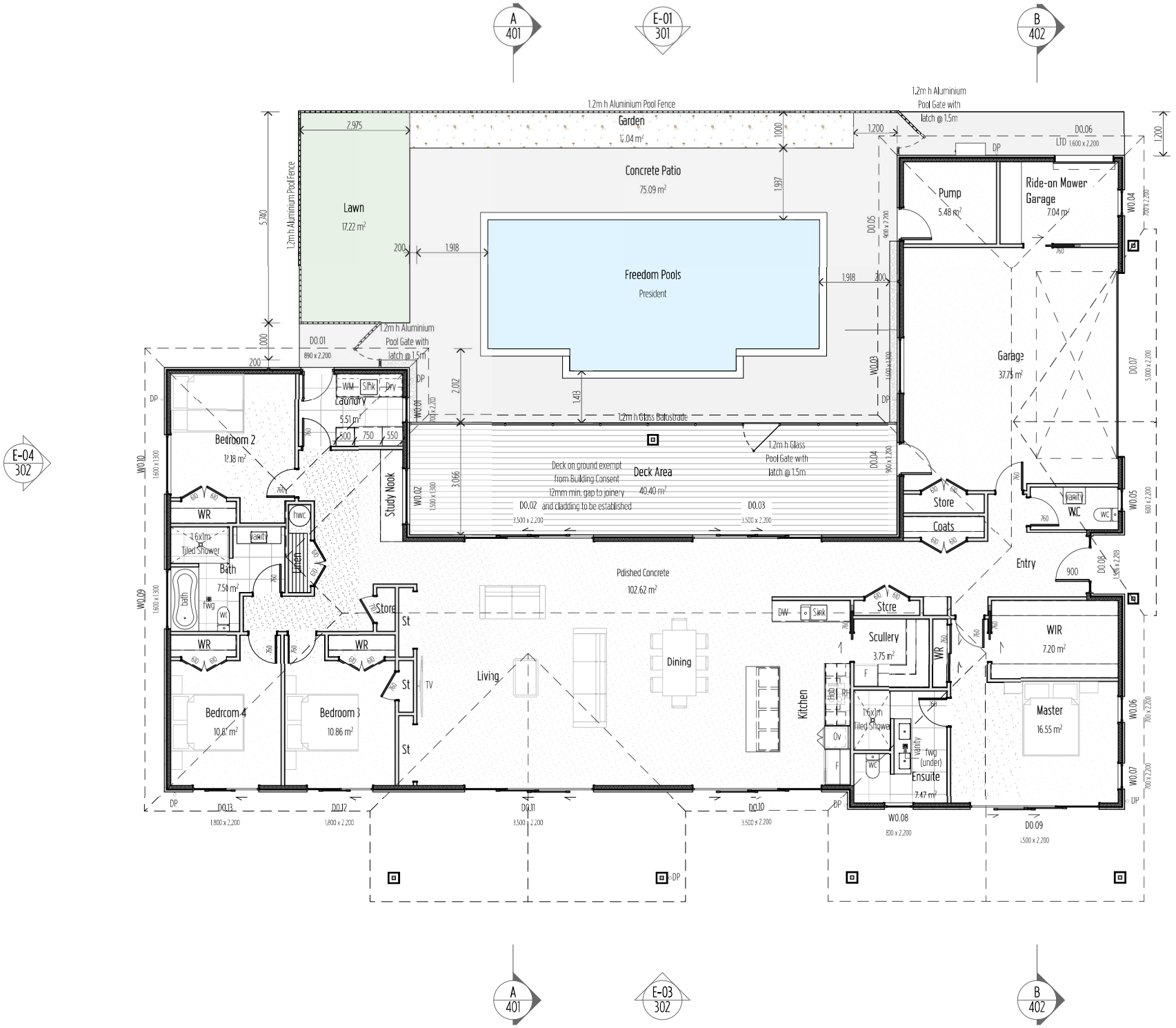

Key/Notes

- Insulated H1.2 SG8 wall framing
- Acoustic insulated H1.2 SG8 wall framing
- Un-insulated H1.2 SG8 wall framing

Waterproofing Membrane installed to entire bathroom/ensuite floor area with 2.1m upstand on walls 1.5m from corner of shower

All flooring tiles to a mean coefficient of friction no less than 0.4

Square stop to ceiling/wall junction

Internal shower glass to be safety glass

Main access deck to be in place for the final inspection, any steps to be max. 190mm riser and min. 280mm tread

Ground Floor Area over Framing
269.69 m²

Ground Floor Area over Cladding
277.25 m²

COASTAL HOMES

Project Title
Kendall

Site Address
Lot 81 The Sanctuary, Mangawhai

Drawing Issue
Building Consent

Sheet Title
Floor Plan

Scale	Drawn
1:100 @ A3	Marc R. Vale
Date	Checked
Work in Progress	CADetailer Ltd.
Drawing no.	Revision
201	02 - WIP

All dimensions to be verified on site before commencing any work or producing shop drawings. Do not scale.
The copyright of this drawing remains with Clifford Bland Ltd and CADetailer Ltd.

RevID	ChID	Change Name	Date
01			14/05/21
02 - WIP	01	Building Consent	Work in Progress

NOT FOR CONSTRUCTION

RECORD OF TITLE
UNDER LAND TRANSFER ACT 2017
FREEHOLD

Search Copy

R.W. Muir
Registrar-General
of Land

Identifier	**973221**
Land Registration District	**North Auckland**
Date Issued	23 February 2021

Prior References
781590

Estate	Fee Simple
Area	5903 square metres more or less
Legal Description	Lot 81 Deposited Plan 556753

Registered Owners
ACDL Trustee Limited

Estate	Fee Simple - 1/826 share
Area	96.8877 hectares more or less
Legal Description	Lot 100-103, 106, 200, 202 Deposited Plan 404128 and Lot 1 Deposited Plan 430128 and Lot 1 Deposited Plan 482523

Registered Owners
ACDL Trustee Limited

Interests

Subject to a water supply right over part Lot 100 DP 404128 marked B on DP 404128 specified in Easement Certificate 974832.2 - 19.5.1981 at 11.52 am

Appurtenant to the parts Lot 1 DP 482523 and Lot 202 DP 404128 formerly contained in NA133C/596 are rights of way specified in Easement Certificate C414433.4 - 17.9.1992 at 1:36 pm

Appurtenant to the parts Lot 1 DP 482523 and Lot 202 DP 404128 formerly contained in NA133C/596 are rights of way specified in Easement Certificate D549922.4 - 17.10.2000 at 10.22 am

The easements specified in Easement Certificate D549922.4 are subject to Section 351E (1) (a) Municipal Corporations Act 1954

Subject to a right to drain sewage over part Lot 1 DP 430128 marked BJ on DP 430128 created by Easement Instrument 8138731.3 - 20.10.2009 at 9:12 am

Appurtenant to Lot 100 DP 404128 herein is a right of way and appurtenant to Lot 1 DP 430128 herein is a right to convey stormwater created by Easement Instrument 8138731.3 - 20.10.2009 at 9:12 am

The easements created by Easement Instrument 8138731.3 are subject to Section 243 (a) Resource Management Act 1991

Subject to a right (in gross) to convey telecommunications and computer media over part Lot 200 DP 404128 marked BN and over part Lot 202 DP 404128 marked BP all on DP 404128 in favour of Telecom New Zealand Limited created by Easement Instrument 8138731.4 - 20.10.2009 at 9:12 am

The easements created by Easement Instrument 8138731.4 are subject to Section 243 (a) Resource Management Act 1991

Subject to a right (in gross) to convey electricity over part Lot 200 DP 404128 marked BN and over part Lot 202 DP 404128 marked BP all on DP 404128 in favour of Northpower Limited created by Easement Instrument 8138731.6 - 20.10.2009 at 9:12 am

Identifier **973221**

The easements created by Easement Instrument 8138731.6 are subject to Section 243 (a) Resource Management Act 1991

8138731.7 Conservation Covenant pursuant to Section 77 Reserves Act 1977 - 20.10.2009 at 9:12 am

8138731.8 Conservation Covenant pursuant to Section 77 Reserves Act 1977 - 20.10.2009 at 9:12 am

8509265.4 Consent Notice pursuant to Section 221 Resource Management Act 1991 - 6.7.2010 at 3:48 pm (affects Lots 100, 101 &103 DP 404128 and Lots 1 DP 430128 and Lot 81 DP 556753)

Land Covenant in Easement Instrument 8581297.2 - 17.2.2011 at 10:51 am

8581297.3 Encumbrance to The Sanctuary Residents Association Incorporated – 17.2.2011 at 10:51 am (Affects part Lot 1 DP 482523 formerly comprised in CT's 524301, 524302, 524303, 524306, 524308, 524309, 524312, 524315, 524316, 524318, 524328, 524335, 524342, 524343, 524346, 524349, 524351, 524298)

8581297.4 Encumbrance to The Sanctuary Residents Association Incorporated – 17.2.2011 at 10:51 am (Affects Lot 81 DP 556753, Lot 1 DP 430128 and Lot 100-103, 106, 200, 202 DP 404128 and part Lot 1 DP 482523 formerly comprised in CT's 517272, 524294, 524295, 524296, 524297, 524299, 524300, 524304, 524305, 524307, 524310, 524311, 524313, 524314, 524317, 524319, 524320, 524321, 524322, 524323, 524324, 524325, 524326, 524327, 524329, 524330, 524331, 524332, 524333, 524334, 524336, 524337, 524338, 524339, 524340, 524341, 524344, 524345, 524347, 524348, 524350)

Land Covenant in Easement Instrument 9542293.3 - 7.2.2014 at 12:23 pm (affects Lot 1 DP 482523)

12012486.1 Variation of Consent Notice 8509265.4 pursuant to Section 221(5) Resource Management Act 1991 - 23.2.2021 at 12:23 pm

Subject to Section 241(2) Resource Management Act 1991 (affects DP 556753)

12012486.3 Consent Notice pursuant to Section 221 Resource Management Act 1991 - 23.2.2021 at 12:23 pm(Affects Lot 81 DP 556753)

12012486.5 Conservation Covenant pursuant to Section 77 Reserves Act 1977 - 23.2.2021 at 12:23 pm (Affects Lot 81 DP 556753)

Land Covenant (in gross) in favour of The Santuary Residents Association Incorporated created by Covenant Instrument 12028708.1 - 26.3.2021 at 2:55 pm (Affects Lot 81 DP 556753)

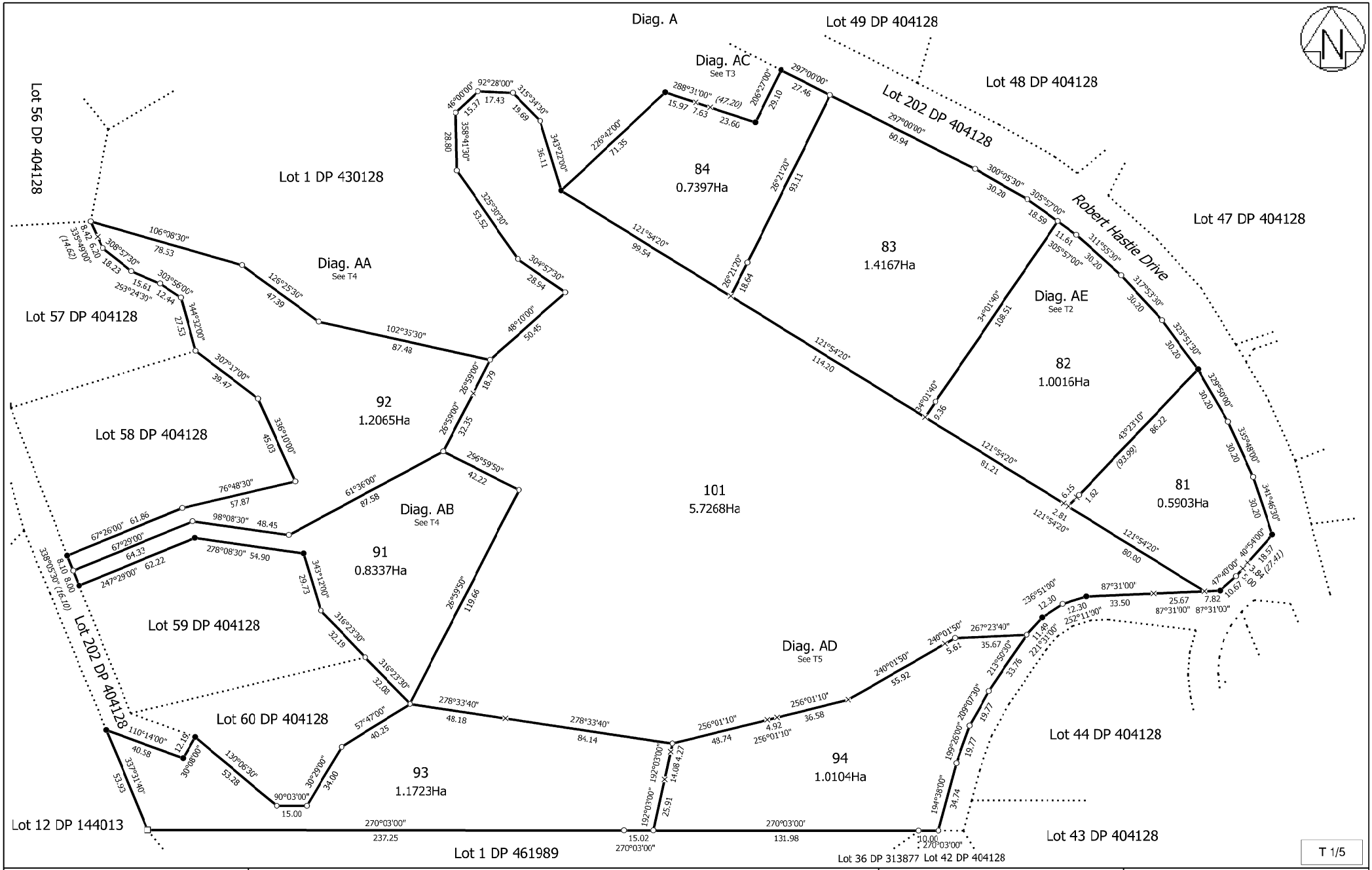

Land District: North Auckland Digitally Generated Plan Generated on: 22/03/2021 2:22pm Page 4 of 8	Lots 81-84, 91-94 & 101 being Subdivision of Lot 2 DP 430128	Surveyor: Stephen Thomas Dobbie Firm: Terra Group NZ Limited trading as Te	Title Plan LT 556753 Approved on: 22/03/2021

Landonline

Toitu te Land whenua Information New Zealand

CSD Plan - DP 556753

Survey Number	DP 556753
Surveyor Reference	93003 - Sanctuary Lot 2 S1&2
Surveyor	Stephen Thomas Dobbie
Survey Firm	Terra Group NZ Limited trading as Terra Consultants
Surveyor Declaration	I Stephen Thomas Dobbie, being a licensed cadastral surveyor, certify that: (a) this dataset provided by me and its related survey are accurate, correct and in accordance with the Cadastral Survey Act 2002 and the Rules for Cadastral Survey 2010, and (b)the survey was undertaken by me or under my personal direction. Declared on 22 Mar 2021 12:10 PM

Survey Details

Dataset Description	Lots 81-84, 91-94 & 101 being Subdivision of Lot 2 DP 430128		
Purpose	LT Subdivision		
Status	Deposited	**Type**	Survey
Land District	North Auckland	**Survey Class**	Class B
Meridional Circuit	Mount Eden 2000	**Vertical Datum**	None

Survey Dates

Surveyed Date	27/11/2020	**Certified Date**	22/03/2021
Submitted Date	22/03/2021 12:10:47	**Survey Approval Date**	22/03/2021
Deposit Date	23/02/2021		

Referenced Surveys

Survey Number	Land District	Bearing Correction
DP 404128	North Auckland	0°00'00"
DP 430128	North Auckland	0°00'00"

Territorial Authorities

Kaipara District

Comprised In

RT 781590

Created Parcels

Parcels	Parcel Intent	Area	RT Reference
Lot 81 Deposited Plan 556753	Fee Simple Title	0.5903 Ha	973221
Lot 82 Deposited Plan 556753	Fee Simple Title	1.0016 Ha	973222
Lot 83 Deposited Plan 556753	Fee Simple Title	1.4167 Ha	973223
Lot 84 Deposited Plan 556753	Fee Simple Title	0.7397 Ha	973224
Lot 91 Deposited Plan 556753	Fee Simple Title	0.8337 Ha	973225
Lot 92 Deposited Plan 556753	Fee Simple Title	1.2065 Ha	973226
Lot 93 Deposited Plan 556753	Fee Simple Title	1.1723 Ha	973227
Lot 94 Deposited Plan 556753	Fee Simple Title	1.0104 Ha	973228
Area A Deposited Plan 556753	Covenant - Land		
Area B Deposited Plan 556753	Covenant - Land		
Area C Deposited Plan 556753	Covenant - Land		

Landonline

Toitu te Land whenua Information New Zealand

CSD Plan - DP 556753

Created Parcels

Parcels	Parcel Intent	Area	RT Reference
Area D Deposited Plan 556753	Covenant - Land		
Area E Deposited Plan 556753	Covenant - Land		
Area F Deposited Plan 556753	Covenant - Land		
Area G Deposited Plan 556753	Covenant - Land		
Area H Deposited Plan 556753	Covenant - Land		
Area I Deposited Plan 556753	Covenant - Land		
Area J Deposited Plan 556753	Covenant - Land		
Area K Deposited Plan 556753	Covenant - Land		
Area L Deposited Plan 556753	Covenant - Land		
Area M Deposited Plan 556753	Covenant - Land		
Lot 101 Deposited Plan 556753	Fee Simple Title	5.7268 Ha	973229
Area N Deposited Plan 556753	Covenant - Land		
Area O Deposited Plan 556753	Covenant - Land		
Area P Deposited Plan 556753	Covenant - Land		
Area Q Deposited Plan 556753	Covenant - Land		
Area R Deposited Plan 556753	Covenant - Land		
Area S Deposited Plan 556753	Covenant - Land		
Area T Deposited Plan 556753	Covenant - Land		
Area U Deposited Plan 556753	Covenant - Land		
Total Area		13.6980 Ha	

Diag. AE

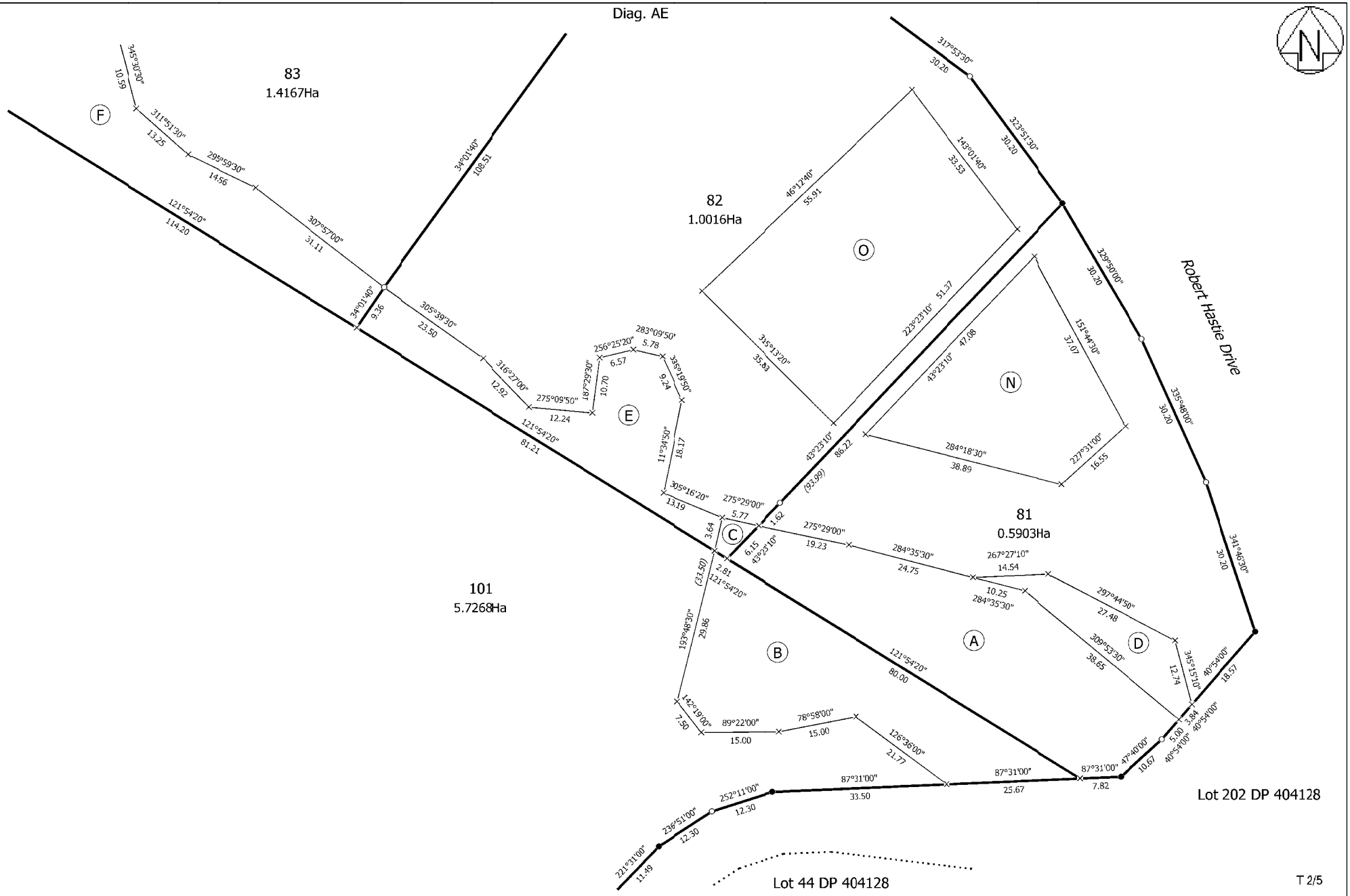

T 2/5

Land District: North Auckland Digitally Generated Plan Generated on: 24/03/2021 11:18am Page 22 of 25	Lots 81-84, 91-94 & 101 being Subdivision of Lot 2 DP 430128	Surveyor: Stephen Thomas Dobbie Firm: Terra Group NZ Limited trading as Te Survey Date: 27/11/2020	CSD Plan DP 556753 Deposited on: 23/02/2021

On-site Effluent Treatment National Testing Programme (OSET NTP)

PERFORMANCE CERTIFICATE
CleanStream TXR-1 On-site Domestic Wastewater Treatment System, OSET NTP Trial 9, 2013/2014

System Tested

The **CleanStream TXR-1 system** is a packed bed recirculating textile filter wastewater treatment unit. The manufacturer's rated design capacity is 1,200 litres/day. Total liquid volume is 7,400 litres (primary treatment 2 tanks each with an effluent filter 3,700 and 1,200 litres; secondary treatment with packed bed 900 litres; recirculation tank 1,100 litres; pump chamber 700 litres). Emergency storage is 1,500 litres. No tertiary treatment (such as UV disinfection) is incorporated. The manufacturer's stated service frequency is annual.

Test Flow Rate

The **CleanStream TXR-1 system** was tested at 1,000 litres/day (equivalent to servicing a 3-bedroom 5 to 6 person household) over an 8 month (35 week) period November 2013 to July 2014 followed by a 1 month (4 week) high load effects test involving 5 days at 2,000 litres per day then 1,000 litres/day over the following 3 weeks.

Testing and Evaluation Procedures

A total of 37 treated effluent samples of organic matter (BOD_5) and suspended solids (TSS) at generally six day intervals during weeks 9 to 35 were tested and evaluated against the secondary effluent quality requirements of the joint Australia/NZ standard AS/NZS 1547:2012.

A total of 16 treated effluent samples of organic matter (BOD_5), total suspended solids (TSS), total nitrogen (TN), ammonia nitrogen (NH_4-N), total phosphorus (TP) and faecal coliforms (FC) at generally six day intervals during weeks 23 through 35 were tested and the results benchmarked and rated on their median values. In addition, the energy used by the treatment system was assessed on the mean of consumption levels over the benchmark period.

AS/NZS 1547:2012 Secondary Effluent Quality Requirements

These requirements are that 90% of all test samples must achieve a BOD_5 of $\leq$ 20 g/m^3 and TSS of $\leq$ 30 g/m^3 with no one result for BOD_5 being >30 g/m^3 and no one result for TSS being >45 g/m^3. The **CleanStream TXR-1 system achieved** a performance level of **100%** for BOD_5 and **100%** for TSS based on the full set of 37 test results in weeks 9 to 35, with no results exceeding the maximums. The **CleanStream TXR-1 system** thus **meets** the secondary effluent quality requirements of AS/NZS 1547:2012.

Benchmark Ratings

The **CleanStream TXR-1 system achieved** the following effluent quality ratings for the sixteen benchmarking results in weeks 20 to 35.

Indicator Parameters	Median	Std Dev	Rating	Rating System				
				A+	*A*	*B*	*C*	*D*
BOD (mg/L)	*2*	*1*	A+	*<5*	*<10*	*<20*	*<30*	*≥30*
TSS (mg/L)	*3*	*1*	A+	*<5*	*<10*	*<20*	*<30*	*≥30*
Total Nitrogen (mg/L)	*37.1*	*5*	D	*<5*	*<15*	*<25*	*<30*	*≥30*
NH_4- Nitrogen (mg/L)	*1.9*	*4*	A	*<1*	*<5*	*<10*	*<20*	*≥20*
Total phosphorus (mg/L)	*4.4*	*0.5*	B	*<1*	*<2*	*<5*	*<7*	*≥7*
Faecal Coliforms (cfu/100mL)	*65,000*	*100,000*	C	*<10*	*<200*	*<10,000*	*<100,000*	*≥100,000*
Energy (kWh/d) (mean)	*0.98*	*0.12*	A	*0*	*<1*	*<2*	*<5*	*≥5*

This Performance Certificate is specific to the **CleanStream TXR-1** model as specified above when operated at a flow rate of 1,000 litres/day, and is valid for 5 years from the date below. For the full OSET NTP report on the performance of the **CleanStream TXR-1 system** contact **Duracrete Products Ltd**, Kamo, Whangarei, Ph: 0800 387 227 Email:ric@duracrete.co.nz.

Authorised By:

Ray Hedgland, Technical Manager, OSET NTP
20 February 2015

On-site Effluent Treatment National Testing Programme, c/- Technical Manager, 2/12 Mt Blanc Pl, Northpark, Howick, AUCKLAND 2013 Mob: 021 626 772 E-mail: ray@hedgland.co.nz

TECHNICAL INFORMATION – CLEANSTREAM TXR-1

The Cleanstream TXR-1 is a complete, one tank textile media treatment system. Its multi-chambered design consists of 2 septic stages, a textile filter stage and irrigation and recirculation stages.

- 8400 litre total capacity
- Emergency storage (without cross contamination - 3500 litres)
- Alarm system (to notify the homeowner of any faults)
- Comprehensive maintenance, 24 hour service





- The TXR-1 tank, roof and walls are constructed from galvanised steel reinforced concrete (70MPA at 28 days) and come with a manufacturer's warranty of 10 years. The mechanical components of the system also come with a 2 year warranty.
- The textile filter and recirculation stages are designed so that effluent is filtered multiple times through the textile media leading to much higher effluent quality than conventional aerobic systems.
- Separate septic stages mean there is always a working septic tank even after periods of non use, this allows the system to stay in a relatively active state.
- The system comes fully constructed, making installation a plug and play operation which provides for a faster turnaround while minimizing installation problems.
- Large emergency storage reduces problems during pump or power failure. The system has approximately 2.5 days of emergency capacity without cross contamination (based on typical flow through 1200L/day)

TREATMENT PERFORMANCE

12 monthly servicing is required to maintain efficient and effective treatment of household waste. This service must be performed by suitably trained personnel.

Expected treatment for medium size homes with daily flows up to 1500L is BOD5 4 mg/L, TSS 5 mg/L. However the system can treat up to 2000L per day whilst still complying with ARC TP58 effluent quality of BOD <15mg and TSS<15 mg/L for Advanced Secondary Treatment Systems – Packed Bed Reactors. Provision for 6 monthly service is required to achieve these larger daily flows.

TREATMENT OVERVIEW

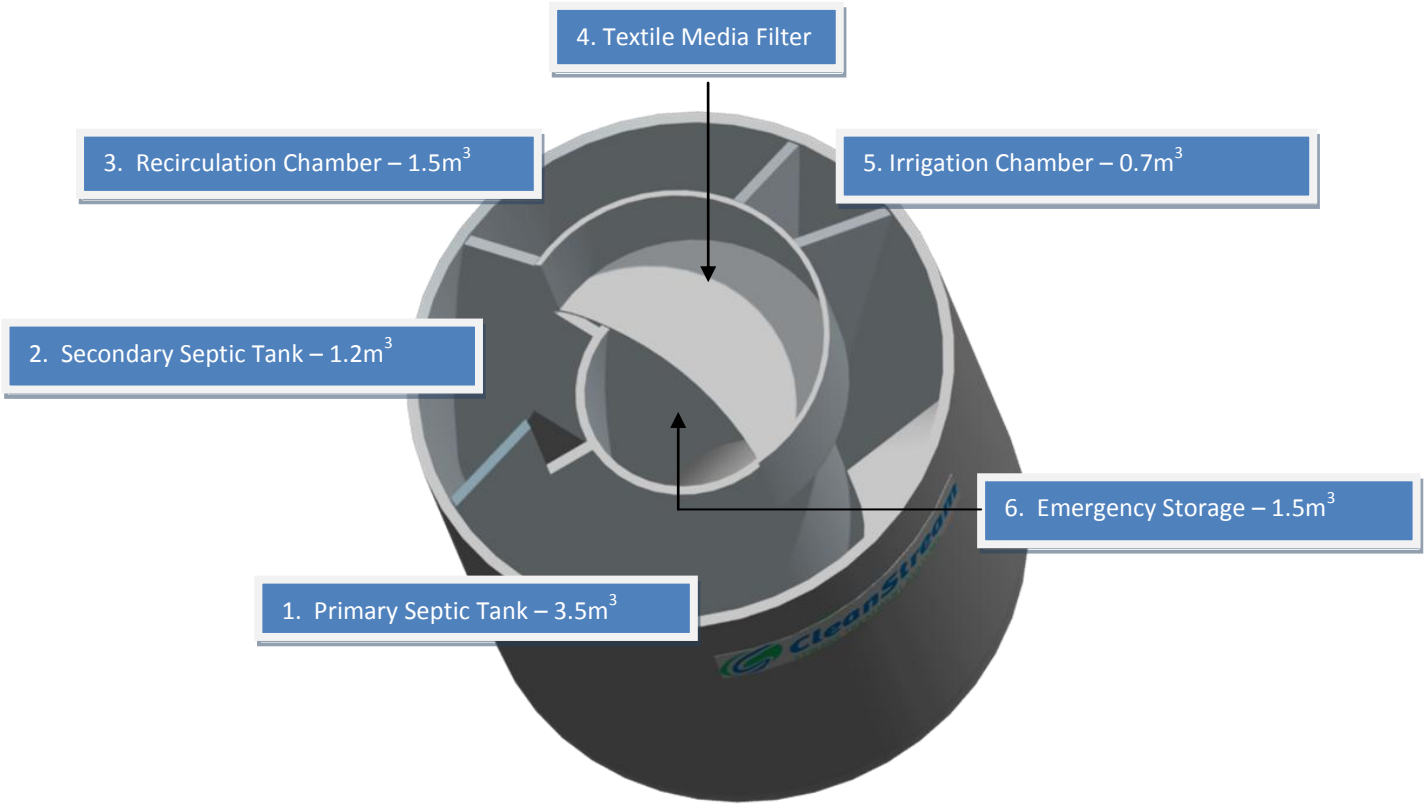

1. The primary septic tank receives the wastewater. It acts like a conventional septic tank and reduces BOD and suspended solids. Effluent then passes through a particulates filter designed to stop large objects from inhibiting the treatment process further on.

2. The secondary septic provides an anoxic environment which aids in nitrate removal converting ammonia into nitrate, while reducing BOD and suspended solids. At the completion of this stage effluent passes through an attached growth filter, which provides an environment for denitrifying bacteria to flourish.

3. The Recirculation Chamber contains a large amount of emergency capacity and is a storage place for effluent before it passes through the textile filter.

4. From the Recirculation chamber treated wastewater is pumped onto the textile filter, this effectively aerates the effluent. Organic Nitrogen is converted to Ammonia by nitrifying bacteria. This process increases effluent quality as it passes through the textile media in the textile filter. The effluent then flows back into the secondary septic tank, unless there is sufficient forward flow to warrant irrigation in which case it drains into the irrigation chamber. Recirculation generally happens multiple times before irrigation is needed.

5. From the irrigation chamber the effluent is passed through a 130 micron Arkal Filter and then dispersed through self compensating drip irrigation.

6. In the event of pump failure emergency storage is provided in the central and recirculation chambers.

U tube video on cleaning arkal filter

https://youtu.be/3qPjnwCusHM



SUBMERSIBLE DRAINAGE PUMPS

DAVEY



Sump Pumps

Submersible Drainage Pumps

Model Numbers: D15VA & D42A/B

APPLICATIONS

- Lawn & garden irrigation
- Sump emptying to higher heads
- Treated & effluent disposal
- Water transfer
- Grey water pumping
- Pumping of light slurries and factory waste

WHY CHOOSE D15VA, D42A/B SUBMERSIBLE DRAINING PUMPS?

Corrosion resistant 304 stainless steel shaft, motor shell and fasteners
- Long service life
- Attractive, lasting appearane

D42A/B have cast 316 stainless steel motor caps and super tough engineered thermo plastic pump casing
- Oustanding corrosion resistance.

Corrosion resistant stainless steel fine mesh suction strainer with large surface area
- Prevents blockages of the pump by solids.

Double mechanical shaft seal in oil bath with hard faced silicon carbide/ceramic seal on pump side (D15VA models have single seals)
- Superior reliability
- Added motor protection

Centrifugal multistage 2 & 3 impeller designs
- Higher pressures and increased efficiency.

Closed vane impellers with long engagement “D” drives
- Positive operation

D42A/B have patented independently floating neck rings
- Outstanding pump performance
- Long pump life

In-built automatic thermal overload
- Protects the motor in the event of bloackage or voltage supply problems.

HO7RNF oil resistant leads, 10 metres long with 3 pin power plug
- Easy to connect to power supply
- Longer life in dirty water.

Semi vortex, open impeller, centrifugal design
- Able to pump soft solids in suspension
- Less susceptible to blockages

D15VA models feature a special recirculation port to keep soft solids agitated in sump, improving ability to pump away such solids.

Sand slinger lip seal
- Added protection

Automatic resetting thermal overload
- Protected against overloading

MATERIALS OF CONSTRUCTION		
Model	**D15VA**	**D42A/B**
Part	**Material**	
Impeller	Glass filled polycarbonate	
Mechanical seal (pump end)	Carbon / Ceramic	
Mechanical seal (motor end)	Silicon carbide/ceramic in oil bath	
Shaft seal elastomer	Nitrile rubber	
Pump shaft	304 stainless steel	
Orings	Nitrile rubber	
Motor shell	304 stainless steel	
Handle	304 stainless steel	
Fasteners	304 stainless steel	
Float & power supply leads	HO7RN-F oil resistant	

OPERATING LIMITS		
Model	**D15VA**	**D42A/B**
Flow capacities to	140 lpm	130 lpm
Maximum total head	7m	32m
Maximum submergence	12m	12m
Maximum water temperature	50ºC	40ºC
Maximum soft solids	20mm O.D.	1.9mm O.D.

ELECTRICAL DATA		
Model	**D15VA**	**D42A/B**
Supply voltage	220 - 240v	
Supply frequency	50Hz single phase	
Speed	2 pole, 2850rpm	
Full load current	1.5A	4.0A
Locked rotor current	9A	14A
Input		0.94kW
Ouput	0.15kW	0.60kW
IP rating		X8
Insulation class	Class F	
Starting		P.S.C.
Lead	10m long	

HYDRAULIC PERFORMANCE

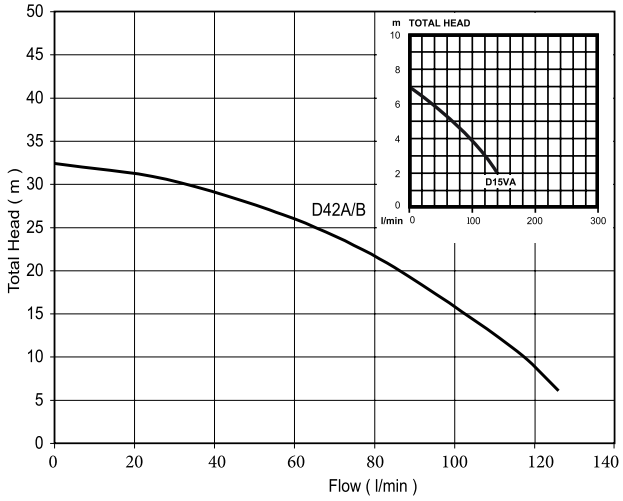

DIMENSIONS (mm)

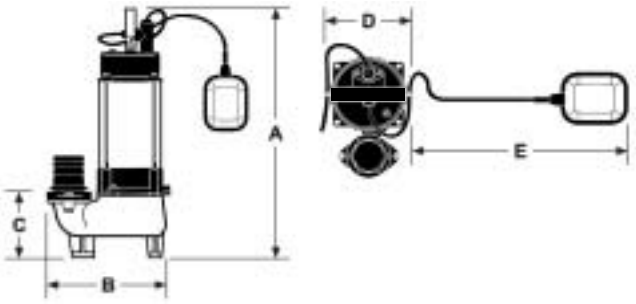

Model	A	B	C	D	E (max)	Outlet BSP	Net Weight (kg)
D15VA	315	160	75	115	250	1"F	5.5
D42A/B	475	240	130	195	330	1"F	18.5

INSTALLATION AND PRIMING

Use a rope to position and retrieve the pump. Do not lower or retrieve the pump using the power lead as this may damage the cable entry seals, causing water leaks and unsafe operation.
Don't use this product for recirculating or filtering swimming pools, spas, etc. While these pumps are built to high safety standards, they are not approved for installations where people will be in the water while they are operating.
Don't pump abrasive materials. Sand and grit in the water being pumped will accelerate wear, causing shortened pump life. Keep your pump clean, particularly in situations where lint, hair or fibrous materials may get bound around the pump shaft.
Regular inspection and cleaning will extend pump life. Make room for the float switch to operate.
Automatic models have a float switch to turn them on when the water level rises and turn them off again when it has been pumped down to the safe operating level of the pump. If the float switch is not free to rise and fall, correct pump operation may not be possible.
Don't run your pump dry.

DAVEY

This literature is not a complete guide to product usage. Further information is available from your Davey dealer, Davey Customer Service Centre and from the relevant product Installation and Operating Instructions. This data sheet must be read in conjunction with the relevant product Installation and Operating Instructions and all applicable statutory requirements. Product specifications may change without notice.
© Davey Water Products 2012.

DURACRETE
PRECAST TO LAST

March 2014

Information on CleanStream Control Box V1.1 for Authorised Installers and Service Providers

1 Mode Setting Switch

In standard operating situations this mode switch should be set to **"O".** This will give the best treatment for the average house of approximately 1200 litres per day.

Do not use any other of the mode options without being given direct instruction from Duracrete. Doing so will change the nature of the treatment significantly and will require specific management.

Mode I: is used to treat approximately 900 litres per day
Mode O: is used to treat approximately 1200 litres per day
Mode II: is used to treat approximately 1500 litres per day

2 Alarm Panel

Any muting of the alarm will be temporary and the buzzer will reactivate in 24hrs from when it was silenced.
It is worth remembering that if it is silenced at 11.30 pm and the problem not rectified it will reactivate at 11.30 pm the next night.
Even when an alarm is silenced the alert light will continue to indicate which alarm has been triggered.

Alert 1: Recirculation Chamber
Alert 2: Irrigation Chamber

3 Repairs

There are no serviceable components within the Control Box, there is nothing that can be replaced or be repaired easily, and **opening the box voids the manufacturer's warranty.**

The Service Provider should carry a spare control box at all times.

If a control box is determined to malfunction, the Service Provider is required to swap out the control box, and send the faulty unit back to Duracrete.

If the box is returned with broken seals then warranties will be void.

Duracrete Products Ltd. A division of Garry Concrete Products Ltd.
Saleyard Rd, Kauri, P.O. Box 4194, Kamo, Whangarei 0141
Phone 0-9-435 2412 Fax 0-9-435 2432, 0800 DURACRETE (387 227)
www.duracrete.co.nz
Member: Concrete Product Manufacturers Association NZ

CleanStream
SEWAGE TREATMENT SYSTEMS

WILEY GEOTECHNICAL LTD

BOREHOLE No. 1

SITE: Kendall eff field

REF: 21076

Sheet 1 of 1

REDUCED LEVEL (RL) / INFERRED GEOLOGY	DESCRIPTION OF SOIL	SOIL SYMBOL	DEPTH (m)	SAMPLE TYPE	WATER CONTENT (%)	WATER LEVEL	CORRECTED VANE SHEAR STRENGTH (kPa) ● Peak Field Vane ○ Remoulded Field vane 50 100 150	SCALA PENETROMETER BLOWS / 100 mm 5 10 15
	T/S topsoil, dark brown 150mm							
	Silt							
	dessication cracks to 500mm moderatley clayey, moderately plastic		1					
	EOH at 1.2m		2					
			3					
			4					
			5					

NOTES Groundwater was not encountered.
waitemata group P

LOGGED BY: CS
DATE DRILLED: 20-Jun-21
DRILL METHOD 50 mm Hand Auger

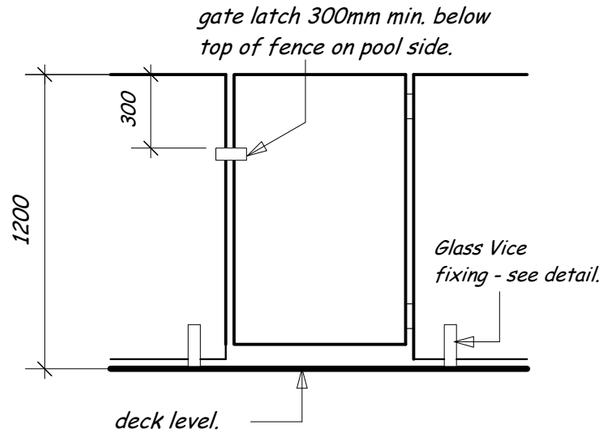

typical glass pool fencing/gate details.

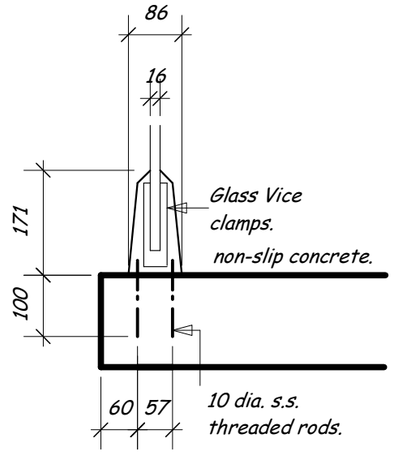

Glass Vice clamps - direct fix.

1:10 @ A3.

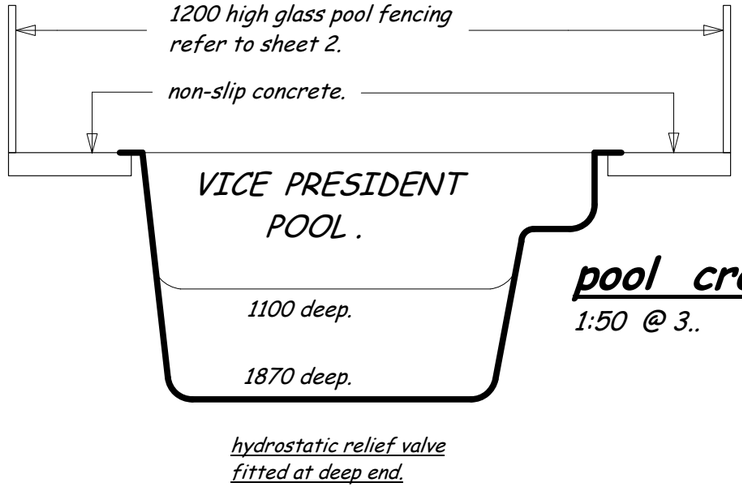

pool cross section.

1:50 @ 3..

hydrostatic relief valve
fitted at deep end.

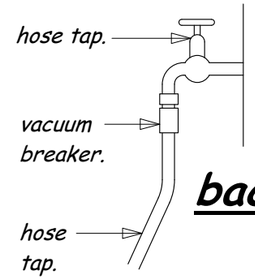

back flow prevention.

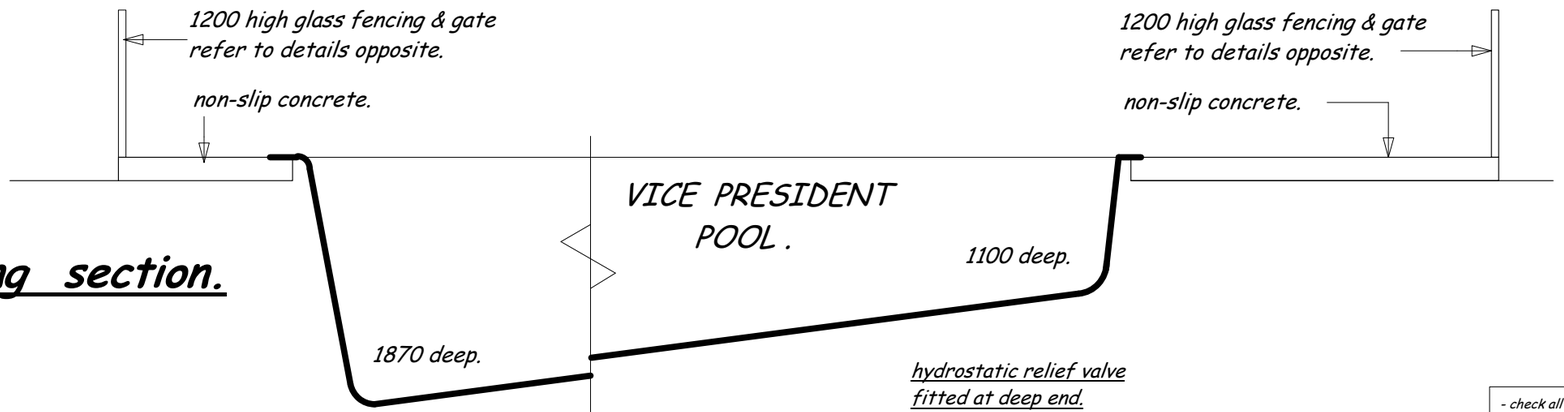

pool long section.

1:50 @ 3..

- check all dimensions and levels on site. DO NOT SCALE.
- all branded materials to be fixed strictly to manufacturers specifications and details.

proposed pool
43 Grayson Road.
Wainui. 0992 .

FREEDOM POOLS & SPAS.
phone 09 426 5323.
fax. 09 426 5325.
14 - unit 1 & 2 Agency Lane.
Silverdale, Auckland

job no. 21/109.
February. 2021.
sheet no. 2.

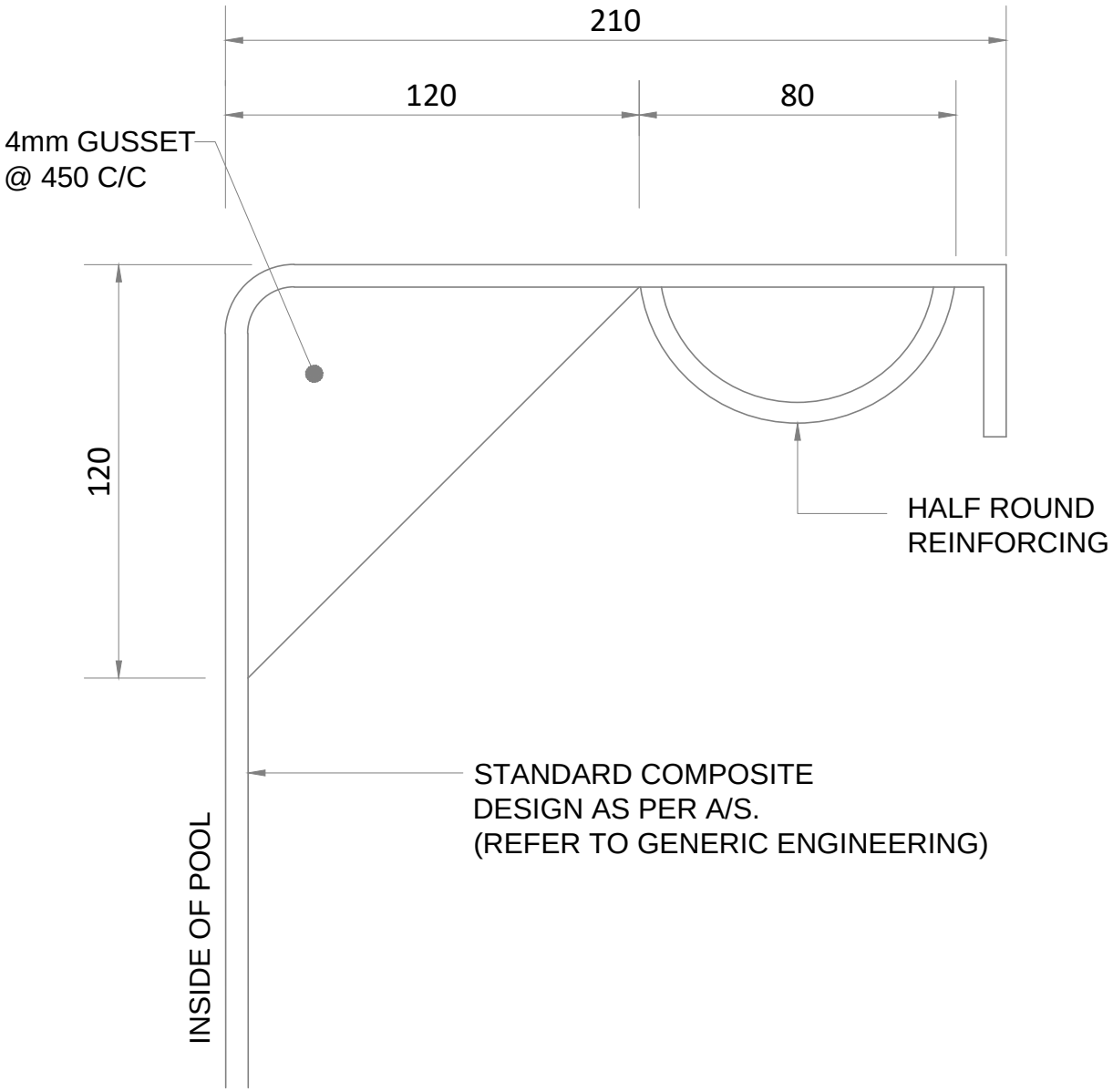

ENGINEERING NEW ZEALAND OFFICIAL MEMBER

Richard A O Field
IPENZ
Membership No. 1165194

..... DATE: 02.10.2019

GF CONSULTING
STRUCTURAL ENGINEERS PROJECT MANAGERS DEVELOPMENT MANAGERS
Suite 1/63 Winton Road, Joondalup WA 6027
PH: (08) 9301 4386
MOBILE: 0432 944 316
EMAIL: gfconsulting01@bigpond.com
www.gfconsulting.com.au

JOB NUMBER	
DESIGNED	RF
CHECKED	RF
DRAWN	JR
DATE	20.09.19
SCALE	NTS

PROJECT
STANDARD COPING DETAIL
FOR FIBRE GLASS POOL

CLIENT
FREEDOM POOLS

REV

DWG NO.
S-01

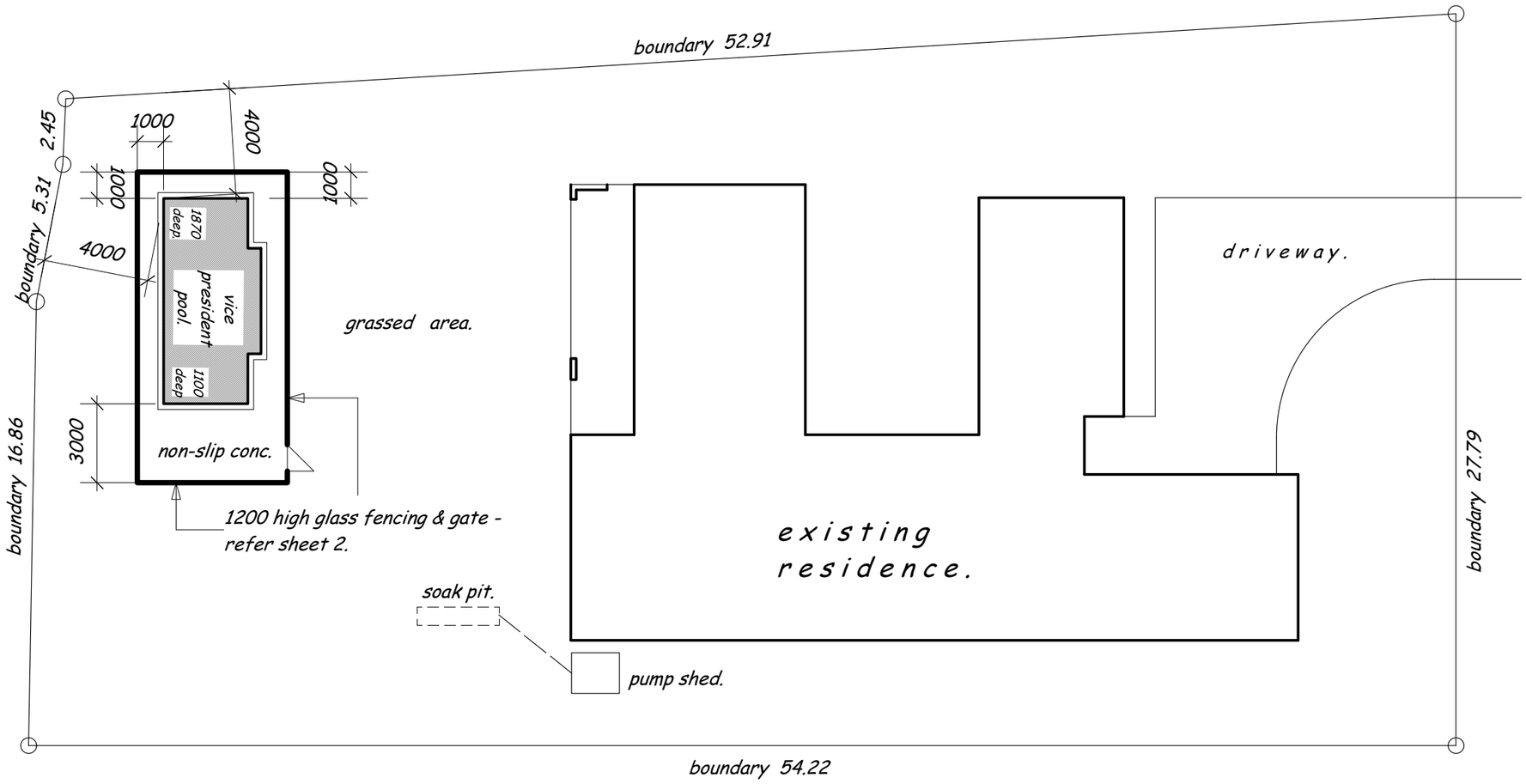

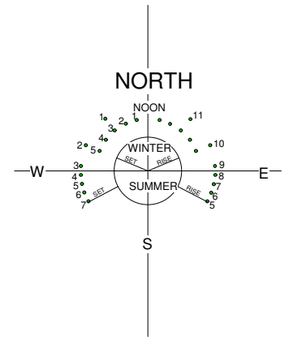

layout plan.

1:200 @ A3.

SITE STATISTICS :
nett site area - 1410 sq.m.
area of existing dwellings - 317 sq.m.
THEREFORE SITE COVERAGE - 23 %.
area of existing & proposed paving. - 105 sq.m.
area of buildings & all paving - 422 sq.m. - 30%
THEREFORE PERMEABLE AREA - 988 sq.m. - 70%.

smoke alarms :
smoke alarms to be fitted within 3m of all bedroom doors.

lot 14.
DP 507653.
area 1410 sq.m.

EXCAVATION :
area of excavation - 45 sq.m.
volume of excavation - 68 cub.m.

- check all dimensions and levels on site. DO NOT SCALE.
- all branded materials to be fixed strictly to manufacturers specifications and details.

proposed pool
43 Grayson Road.
Wainui. 0992 .

FREEDOM POOLS & SPAS.
phone 09 426 5323.
fax. 09 426 5325.
14 - unit 1 & 2 Agency Lane.
Silverdale, Auckland

job no. 21/109.
February. 2021.
sheet no. 1.

GENERAL INSTALLATION NOTES:

REFERENCE STANDARD AS/NZS 1839:1994 SWIMMING POOLS - PREMOULDED FIBRE-REINFORCED PLASTICS - DESIGN AND FABRICATION.

1. LOCATE THE POOL CLEAR OF STRUCTURES OR FEATURES, INCLUDING TREES, CAPABLE OF IMPOSING LOADS ON THE POOL STRUCTURE. SEEK ENGINEERING ADVICE IF ANY FEATURES EXISTS WITHIN A DISTANCE FROM THE EDGE OF THE POOL WHICH IS EQUAL TO OR LESS THAN THE DEPTH OF THE POOL.
2. SEEK ENGINEERING ADVICE IF THE POOL IS PROPOSED TO BE LOCATED ON A SLOPE STEEPER THAN ONE (1) VERTICAL IN EIGHT (8) HORIZONTAL.
3. THIS POOL IS DESIGNED FOR INSTALLATION ON SITES RATED 'A', 'S' AND 'H' (AS 2870-2011 Residential Slabs and Footings). FOR SITES WITH OTHER CLASSIFICATIONS, REFER TO SITE PLAN FOR ANY ADDITIONAL REQUIREMENTS KNOWN AT THE TIME OF PREPARATION, OR SEEK ENGINEERING ADVICE.
4. MAINTAIN A ZONE OF NOT LESS THAN 600mm WIDTH ALL AROUND THE POOL, WHICH FALLS AWAY FROM THE POOL AT A SLOPE OF NOT LESS THAN ONE (1) VERTICAL IN ONE HUNDRED (100) HORIZONTAL.
5. EXCAVATION MUST PROVIDE A MINIMUM CLEARANCE OF 100mm TO THE FULL PERIMETER OF THE POOL WALLS ON SITES RATED 'A', 'S' AND 'H'.
6. THE POOL FOUNDATION MUST BE OF UNDISTURBED SOIL OR ROCK (including weathered rock) AND MUST BE OF THE SAME MATERIAL OVER THE FULL AREA OF THE POOL. SEEK ENGINEERING ADVICE IF DIFFERENT MATERIALS ARE ENCOUNTERED AT FOUNDATION LEVEL.
7. BEDDING FOR THE POOL MUST CONSIST OF UNBOUND, FREE DRAINING SAND OR AGGREGATE OF 6mm MAXIMUM PARTICLE SIZE, PLACED TO A DEPTH OF 100mm, AND CAREFULLY SCREEDED TO THE PROFILE OF THE POOL FLOOR. CLAY, SILT AND ORGANIC MATERIALS MUST NOT FORM PART OF THE BEDDING LAYER.
8. PLACEMENT OF THE POOL STRUCTURE MAY PROCEED FOLLOWING PREPARATION OF THE MAIN DRAIN AND HYDROSTATIC RELIEF VALVE RECESS IN THE BEDDING.
9. BED THE POOL STRUCTURE UNIFORMLY ON THE BEDDING LAYER. EXCEPT WHERE FREE DRAINING CONDITIONS AND THE ABSENCE OF A WATER TABLE ARE ASSURED, INSTALL A STANDPIPE RELIEF DRAIN TO SURFACE AND GRATED COVER IN ACCORDANCE WITH THE DETAILS AND REQUIREMENT SETOUT IN AS/NZS 1839-1994 SWIMMING POOLS - PREMOULDED FIBRE-REINFORCED PLASTICS INSTALLATION.
10. THOROUGHLY BACKFILL THE VOID BETWEEN THE POOL AND THE EXCAVATION WITH A CEMENT-STABILIZED-SAND DRY MIX. NOTE THAT IN NATURAL SAND SITES, FREE FLOWING SITE MATERIAL MAY BE USED FOR BACKFILL. PLACE THE BACKFILL PROGRESSIVELY TO THE PERIMETER OF THE POOL, IN LAYERS NOT EXCEEDING 300mm. COMPACT THE BACKFILL BY RODDING TO PREVENT THE FORMATION OF VOIDS WHICH MAY LEAD TO FUTURE SOIL MIGRATION IN SERVICE. BACKFILL OTHER THAN NATURALLY OCCURING SAND SITES SHOULD COMPRISE.
    - PRE-MIXED CLEAN SAND AND CEMENT, MIXED AT THE RATIO OF 16:1 BY VOLUME, OR
    - MACHINE MIXED AT SITE, CLEAN SAND AND CEMENT, MIXED AT THE RATIO 10:1 BY VOLUME, OR
    - HAND MIXED AT SITE, CLEAN SAND AND CEMENT, MIXED AT THE RATIO OF 6:1 BY VOLUME, OR
11. POOL-ASSOCIATED SERVICES MUST BE INSTALLED TO THE REQUIREMENTS OF THE RESPECTIVE AUSTRALIAN STANDARDS AND LOCAL AUTHORITY AND OTHER STATUTORY REQUIREMENTS, PARTICULARLY THOSE RELATING TO
    - ELECTRICAL WORKS.
    - PLUMBING WORKS.
    - POOL FENCING.
    - AND OTHERWISE TO AS/NZS 1839.
12. THE SUPPLIER OF A GRP SWIMMING POOL MUST PROVIDE TO THE PURCHASER, THE OPERATING INSTRUCTIONS NOTED IN AS/NZS 1839, INCLUDING THOSE APPLICABLE TO THE EMPTYING OF THE POOL, OPERATION OF ASSOCIATED DRAINAGE STANDPIPES AND ANY ADDITIONAL PRECAUTIONS APPLYING TO THE PARTICULAR INSTALLATION OR CONDITIONS.
13. SUPPLIER TO SEPARATELY ADVISE THE PURCHASER OF RESTRICTIONS ON LOWERING THE WATER LEVEL IN THE POOL.

GENERAL CONSTRUCTION NOTES:

REFERENCE STANDARD AS/NZS 1839:1994 SWIMMING POOLS - PREMOULDED FIBRE-REINFORCED PLASTICS - DESIGN AND FABRICATION.

A. COMPONENTS OF THE GRP COMPOSITE:
1. COSMETIC LAYER (gelcoat) - WATER/CHLORINE/UV STABLE RESIN WITH FILLERS TO NOT LESS THAN 0.35mm THICKNESS,WITH AVERAGE THICKNESS NOT LESS THAN 0.5mm.
2. CORROSION BARRIER (glass fibre reinforced) - WATER/CHLORINE STABLE RESIN WITH GLASS FIBRE REINFORCEMENT FULLY SATURATED AND FREE FROM AIR BUBBLES, TO 2mm (min) THICKNESS THROUGHOUT.
3. STRUCTURAL LAYER (glass fibre reinforced) - TO NOT LESS THAN 6mm THICKNESS THROUGHOUT.
4. OUTER SURFACE LAYER - RESIN LAYER, WAXED AND FULLY REACTED, TO 0.2mm (min) THICKNESS THROUGHOUT, AND FREE FROM VOIDS, AIR BUBBLES AND UNBOUND FIBRES.

B. MATERIALS:
1. RESIN - POLYESTER, EPOXIDE, FURAN OR VINYLESTER RESIN, WARRANTED BY THE MANUFACTURER FOR USE IN THE PROPOSED APPLICATION (within the composite layer, in a chlorinated pool water environment).
2. GLASS FIBRE - DRAWN 'E' GLASS FIBRES WITH LESS THAN 1% ALKALI CONTENT, COMPATIBLE WITH RESIN SYSTEM.
3. ADDITIVES - FILLERS, UV STABILIZER, COLOURING AGENTS, WAX AS REQUIRED TO PROMOTE COLOUR-FASTNESS, FULL CURING OF THE FINISHED COATINGS, AND PHYSICAL PROPERTIES OF THE COMPOSITE.

C. GRP STRUCTURAL CONTENT:
1. GLASS FIBRE CONTENT,
    - WALLS - MINIMUM GLASS CONTENT 1500 GRAMS PER SQUARE METRE.
    - FLOORS - MINIMUM GLASS CONTENT 800 GRAMS PER SQUARE METRE.
    - RIBS - MINIMUM GLASS CONTENT 600 GRAMS PER SQUARE METRE.
    - COPING - MINIMUM GLASS CONTENT 600 GRAMS PER SQUARE METRE.
2. RESIN CONTENT.
    - MINIMUM RESIN TO GLASS RATIO OF 2.25:1 BY WEIGHT TO BE ACHIEVED THROUGHOUT.
3. PHYSICAL PROPERTIES, CURED STRUCTURAL LAYER.
    - MINIMUM FLEXURAL STRENGTH - 160 MPa.
    - MINIMUM FLEXURAL MODULUS - 7000 MPa.

D. PLACEMENT AND CURING:
1. LAYUP - PLACE EACH LAYER IN ONE CONTINUOUS APPLICATION, WITH MINIMUM DELAYS BETWEEN APPLICATIONS. WORK IN WEATHER PROTECTED LOCATIONS, FREE FROM DUST, EXCESS MOISTURE AND EXTREMES OF TEMPERATURE.
2. CURING - ALLOW TO CURE TO NOT LESS THAN 80% OF ULTIMATE HARDNESS PRIOR TO HANDLING THE FINISHED PRODUCT.

NOTE: FOR SOIL CLASSIFICATIONS OF 'H1', 'H2' & 'E' CLASS SOILS REFER TO CERTIFICATION LETTER (16-10261) FOR REQUIRED ADJUSTMENTS.

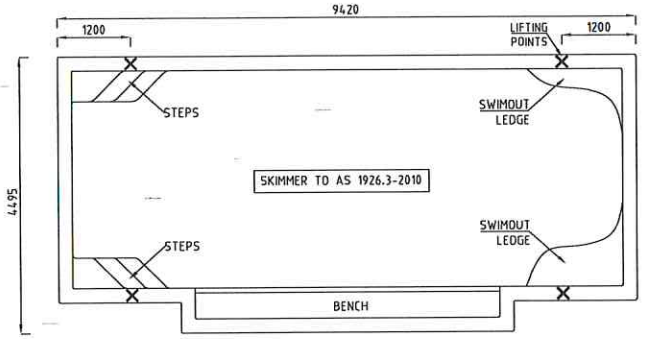

POOL PLAN - PRESIDENT
N.T.S

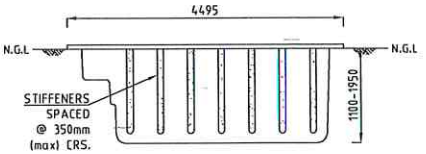

END ELEVATION
N.T.S

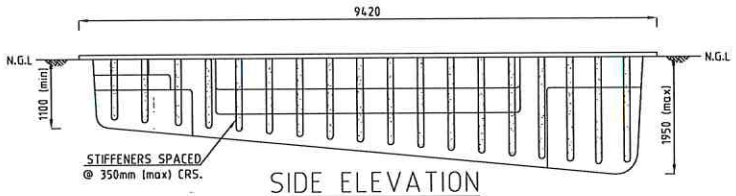

SIDE ELEVATION
N.T.S

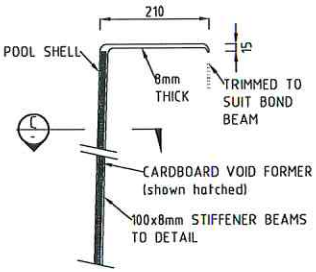

POOL EDGE BEAM DETAIL
N.T.S

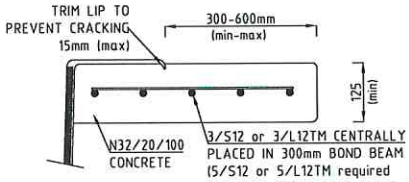

COPING BEAM DETAIL
N.T.S

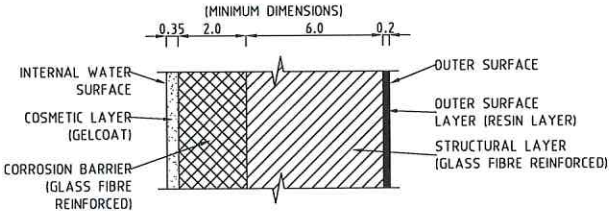

GRC COMPOSITE COMPONENTS
N.T.S

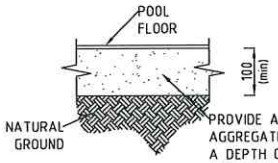

PROVIDE A LAYER OF UNBOUND, FREE DRAINING SAND OR AGGREGATE OF 6mm MAXIMUM PARTICLE SIZE, PLACED TO A DEPTH OF 100mm. CLAY, SILT AND ORGANIC MATERIALS MUST NOT FORM PART OF THE BEDDING LAYER. REFER SPECIFICIATION FOR ADDITIONAL DETAILS.

POOL FOUNDATION PREPARATION - DETAIL
N.T.S

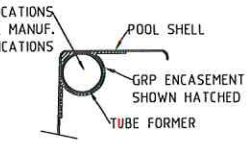

POOL LIFTING EYE
N.T.S

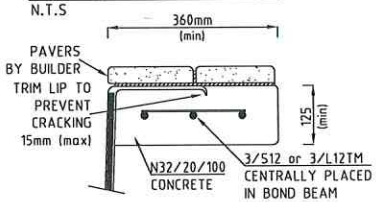

PAVER COPING
N.T.S

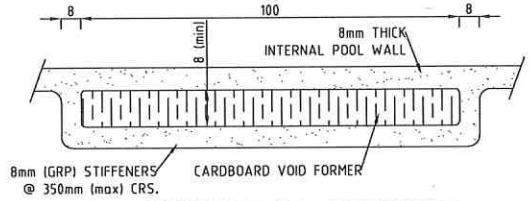

C - SECTION WALL STIFFENERS
N.T.S

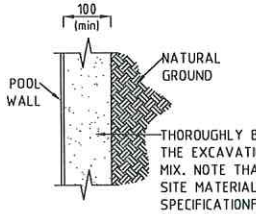

THOROUGHLY BACKFILL THE VOID BETWEEN THE POOL AND THE EXCAVATION WITH A CEMENT-STABILIZED-SAND DRY MIX. NOTE THAT IN NATURAL SAND SITES, FREE-FLOWING SITE MATERIAL MAY BE USED FOR BACKFILL. REFER SPECIFICATIONFOR ADDITIONAL DETAILS.

POOL BACKFILL DETAIL
N.T.S

DRAWING REVISIONS				REFERENCE DRAWINGS	
C	REVISED AS PER CLIENTS REQUEST	GAB	APR2019		
B	REVISED AS PER CLIENTS REQUEST	GAB	FEB2019		
A	REVISED AS PER CLIENTS REQUEST	GAB	JUL2017		
-	PRELIMINARY FOR CLIENT APPROVAL	GAB	MAR2016		
REV	DESCRIPTION	BY	DATE	DRAWING NAME	TITLE

COPYRIGHT
THESE DESIGNS, PLANS AND INFORMATION ARE COPYRIGHT AND ARE NOT TO BE USED OR REPRODUCED WHOLLY OR IN PART OR TO BE USED ON ANY PROJECT WITHOUT THE WRITTEN PERMISSION OF SUMMERMORE PTY LTD
DO NOT SCALE FROM THESE DRAWINGS.

SIGNED APPROVAL		
APPROVED		2APR2019
RPEQ	6715	
REVIEWED		
DESIGNED	RAB	APR2019
DRAWN	GAB	APR2019
SCALE	AS SHOWN	
ORIGINAL DRAWING SIZE at A3		

Summermore Pty Ltd
Consulting Engineers
ACN: 108 898 433
ABN: 42 108 898 433
ron@summermore.com.au
www.summermore.com.au
PO Box 1671
Browns Plains BC, QLD, 4118
Phone: 07 3800 0973
Fax: 07 3800 1860

CLIENT
Freedom Pools
227 Sandy Creek Rd,
Yatala,
QLD, 4207.

Freedom POOLS • SPAS • LIFESTYLE
feel the freedom

PROJECT: Structural Details (Fibreglass Swimming Pool)
TITLE: PRESIDENT
DRAWING NUMBER: 16-10261-S01
REV: C

Fibreglass Swimming Pools

Design Calculations

For

Freedom Pools

May 2017

Prepared By

Ronald Bell
Grad Cert (Tech Mgt), BEng Civil (Hons), PEng,MIEAust (891940), MIPENZ(1027605),RPEQ(6715),RBP(Vic)(EC27967),RBP(NT)(60596ES),RBP(Tas)(CC5556C),MAIB(9225), JP(Qual).
SUMMERMORE Pty Ltd ABN 42 108 898 433
PO Box 1671
Browns Plains BC
Queensland, 4118
Tel: 07 3800 0973 Fax: 07 3800 1860 Mob:0438288116
E: ron@summermore.com.au
W: www.summermore.com.au

1 INTRODUCTION

This report contains calculations which set out both the properties and design details for the fibreglass swimming pool and has been prepared for Freedom Pools.

The work has been carried out considering pressures exerted on pools by the expansion of reactive clays due to seasonal changes. This method of assessing these pressures has been used for designing pools for the above mentioned areas. These pressure calculations were based on the section on surface movements calculations set out in AS2870: Residential Slabs and Footings.

Designs were carried out in accordance with AS/NZS1838-1994: Swimming Pools-Premoulded Fibre Reinforced Plastics-Design and Fabrication. The designs were checked using a structural analysis program.

2.0 MATERIALS AND LOADING

2.1 Material Properties

The material used in fabrication is of two types:

1. Conventional GRP layup.

-Panel tests:

Tensile strength	60	MPa
Flexural strength	130	MPa
Flexural modulus	7700	MPa
Shear strength	70	MPa

-Core material:

Flexural strength	30	MPa
Flexural modulus	4000	MPa

2.2 Design Loads

In accordance with AS/NZS1838 the pools were designed for a surcharge load of 2kPa, with a minimum soil density of 20kN/m³ and an earth pressure coefficient of k_a = 1.0 for end walls. (to allow for arching effect) and k_a = 0.33 elsewhere.

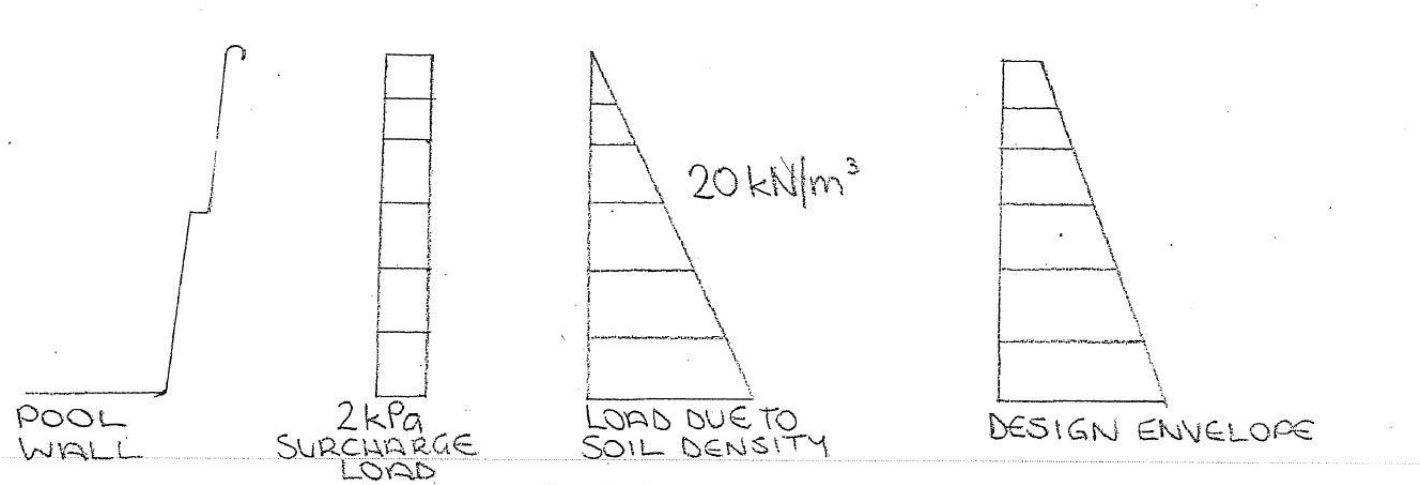

FIGURE 2.1 DESIGN LOAD ENVELOPE

The pools were designed to withstand soil and surcharge:

1. to cover a standard range of soil conditions
2. to cover possible short term water table build up and
3. maintenance without internal support.

The overall mechanics are summarised below:

1. fibreglass walls span between ribs, or between coping, step ledge & radius
2. the rib spans from the coping to the floor
3. coping forms a ring beam around edge of pool
4. the floor is installed with a 50mm camber downwards to help act as a compression member to carry loads from ribs to walls

Pools have been designed for loadings as per AS/NZS1838. Possible pressures due to reactive clays will be examined and compared with the above design envelope.

SUMMERMORE Pty Ltd
39 Dampier Crescent
Drewvale
Queensland, 4116
Phone : 07 3800 0973
Fax : 07 3800 1860
ACN : 108 898 433
ABN : 42 108 898 433

Project	FREEDOM POOLS			
Calculation				
Designer	RAB	Date		Page 3 of
Project No.	10261	Client		

23 SECTION PROPERTIES

COPING : 360w x 125d with 3/512.
Concrete N25/20/100

Area = 360 x 125 = 45000 mm^2
I_{yy} = 125 x $360^3/12$ = 486×10^6 mm^4
Z_{yy} = $486 \times 10^6 / 180$ = 2.7×10^6 mm^3
I_{33} = $360 \times 125^3/12$ = 58.6×10^6 mm^4
J_{33} = $(486 + 58.6) \times 10^6$ = 545×10^6 mm^4

SWIMOUT : 609w + 8t Take 100 return each side.

Area = $2 \times 100 \times 8 + 609 \times 8$ = 6472 mm^2
I_{yy} = $8 \times 609^3/12 + 2(100 \times 8^3)/12 + 900 \times 54.5^2$
= 153×10^6 mm^4
I_{33} = $2 \times 8 \times 100^3/12 + 900 \times 54.5^2 + 609 \times 8^3/12$.
= 4.03×10^6 mm^4

STEPLEDGE (FRP) : I_{yy} = 17×10^6 mm^4
I_{33} = 169×10^6 mm^4
J = 186×10^6 mm^4

STEPLEDGE (Comp) : I_{yy} = 289×10^6 mm^4
I_{33} = 2380×10^6 mm^4
J = 2670×10^6 mm^4

RADIUS : R = 300 t = 8
$I_{xy} = I_{yy}$ = 86.9×10^6 mm^4
J = 174×10^6 mm^4

FLOOR : 1000 band
A = 4200 mm^2
I_{33} = 6174 mm^4
I_{yy} = 350×10^6 mm^4
J = 350×10^6 mm^4.

SUMMERMORE Pty Ltd
39 Dampier Crescent
Drewvale
Queensland, 4116
Phone : 07 3800 0973
Fax : 07 3800 1860
ACN : 108 898 433
ABN : 42 108 898 433

Project	FREEDOM POOLS			
Calculation				
Designer	RAB	Date		Page 4 of
Project No.	10261	Client		

WALL PROFILE

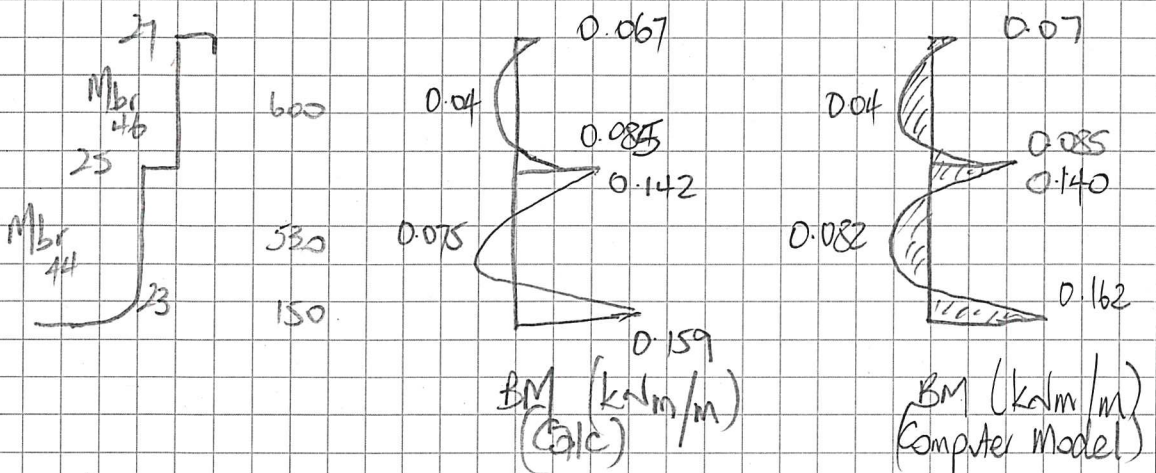

BM (kNm/m) (Calc)

BM (kNm/m) (Computer Model)

DEMONSTRATES THAT COMPUTER MODEL CORRELATES VERY WELL WITH BM DISTRIBUTION.

COPING.

LOAD $= 0.66 \times 0.6/2 + (4.62 - 0.66 \times 0.6)/2 \times 1/3 = 0.6$ kN/m

$BM_{sp.} = 0.6 \times 6^2/24 = 0.9$ kNm

$BM_{cant} = 0.6 \times 6^2/12 = 1.8$ kNm

$Z_t = 207 \times 10^6$ mm^3

$Z_c = 82.7 \times 10^3$ mm^3

$M/Z_{span} = 0.9 \times 10^6 / 82.7 \times 10^3 = 10.9$ MPa .. ok

$M/Z_{cant} = 1.8 \times 10^6 / 82.7 \times 10^3 = 21.8$ MPa .. ok

$\delta = L/114$ .. ok

STEPLEDGE:

LOAD $= 8.85$ kNm

$M/Z = 8.85 \times 10^6 / 32 \times 10^3 = 283$ MPa .. ok

$\delta = 4.47$ mm $(L/1342)$ .. ok

WALL:

LOAD $= 0.375$ kNm

$M/Z = 0.375 \times 10^6 / 6249 = 60$ MPa .. ok

$\delta = 4.2$ mm $(L/142)$ .. ok.

COPING, STEPLEDGE, WALL ALL OK.

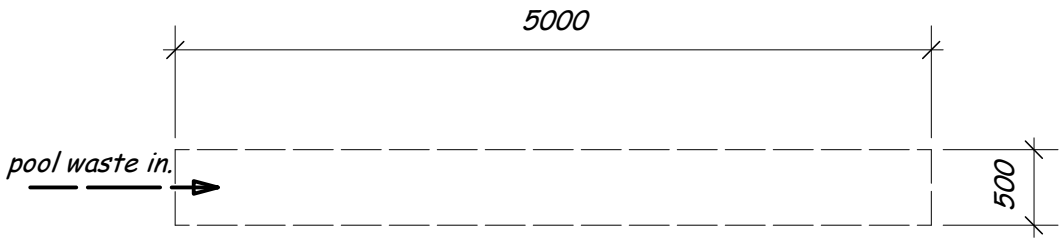

soak pit - plan.

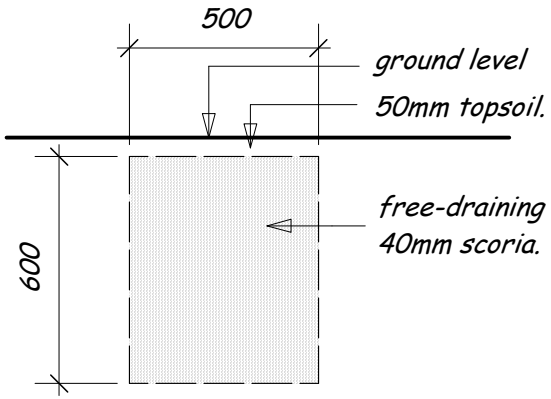

soak pit - section.

- check all dimensions and levels on site. DO NOT SCALE.
- all branded materials to be fixed strictly to manufacturers specifications and details.

standard soak pit details.

FREEDOM POOLS & SPAS.

phone 09 426 5323.
fax. 09 426 5325.
14 - unit 1 & 2 Agency Lane.
Silverdale, Auckland

job no. 14/124
July. '14.

sheet no. 1.

MODULINE POOLSIDE FENCING

SPECIFICATION FOR STANDARD RESIDENTIAL POOL SAFETY FENCING

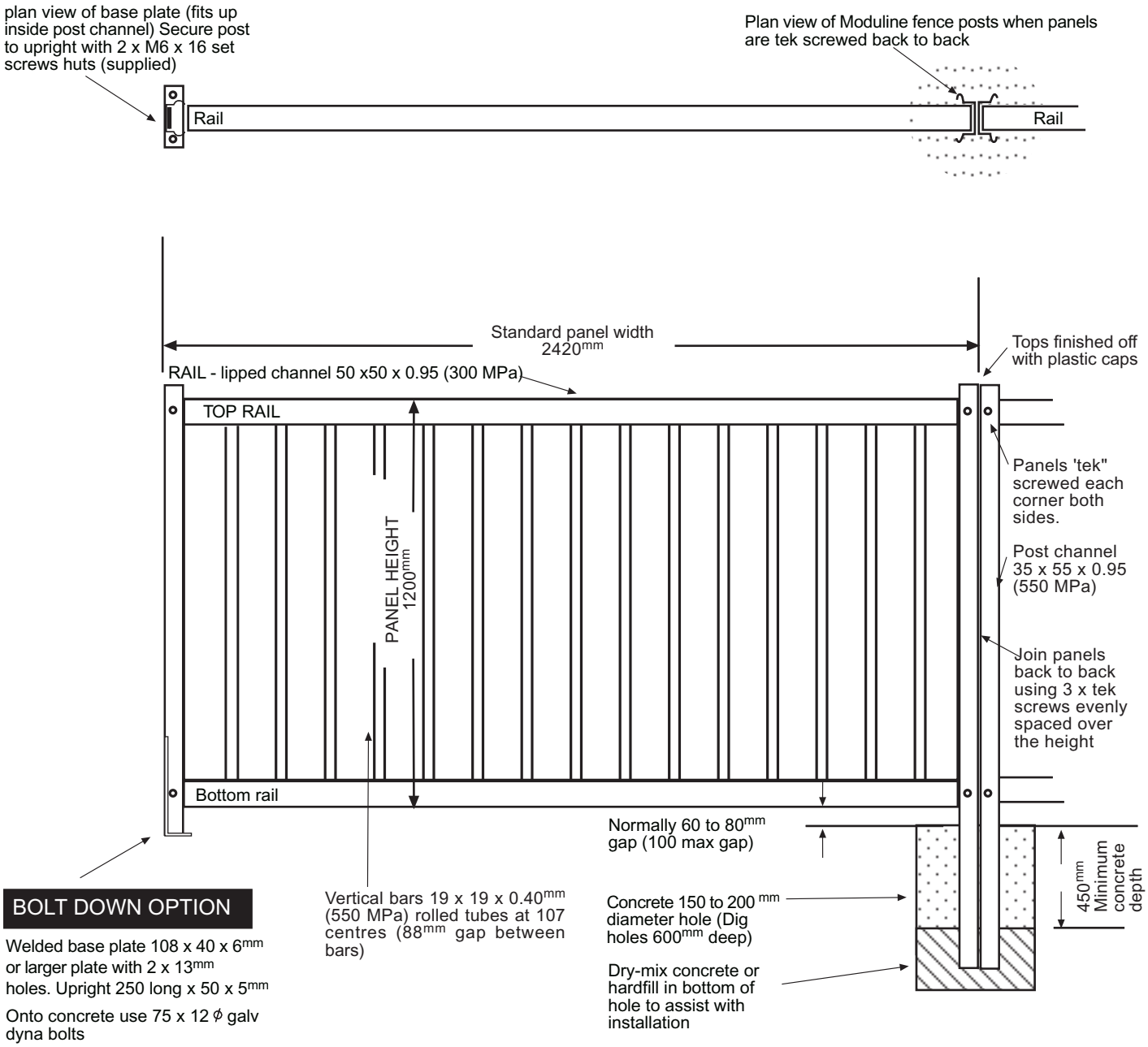

BOLT DOWN OPTION

Welded base plate 108 x 40 x 6mm or larger plate with 2 x 13mm holes. Upright 250 long x 50 x 5mm

Onto concrete use 75 x 12 ϕ galv dyna bolts

Onto timber use 100 x 12 ϕ galv coach screws

NOTE

Nogging under the deck may be required.Coach screws must screw into solid timber.

DRAWING NOT TO SCALE

METAL ROLLFORMING LIMITED

39 THOMAS PEACOCK PL, PANMURE, PO BOX 18-217, AUCKLAND 1743, PHONE (09)527-7897, FAX (09)527-7896

© Copyright 2008

MODULINE COLORSCREEN POOLSIDE are the registered trademarks and property of Metal Rollforming Ltd

Installation Instructions
Procedimientos de instalación
Instructions d'installation

MAGNALatch® **Series 3**
Top Pull model

D® D&D Technologies
Hi-Performance Hardware

Always confirm and install this latch in accordance with your local fence barrier codes
Siempre confirmar e instalar este cerrojo de acuerdo con sus códigos locales para la barrera de la cerca
Installez et vérifiez toujours l'installation de ce loquet en conformité avec les codes locaux pour les clôtures

For pool gates 48" (1200mm) or higher
Para puertas para piscinas de 48" (1200mm) o más altas
Pour les portillons de piscine de 1,20 m (48 pouces) ou plus



5/32" (4mm)

3" (75mm)

GAP VARIANCE
Diferencia de espacio
Écart d'espacement
1/2"–11/2" (13mm–38mm)

GATE FRAME
Marco de la puerta
Cadre de portillon

FENCE POST
Poste de cerca
Poteau de clôture

1

11 3/4" (300mm)

A

FENCE POST
Poste de cerca
Poteau de clôture

59" (1500mm)

Maximize distance between brackets
Maximizar la distancia entre los soportes
Espacez les supports au maximum

2

5/32" (4mm)

C D 5 D 6 2

FENCE POST
Poste de cerca
Poteau de clôture

C 3 D 4 1 D

3

4

Position Striker Body onto bottom of latch
Colocar en posición la caja de la cerradura hembra en la base del cerrojo
Positionnez la barre de butée sur le bas du loquet

GATE FRAME
Marco de la puerta
Cadre de portillon

E

5

1/8" (3mm)

Align marks for proper vertical alignment
Alinear las marcas para la correcta posición vertical
Alignez les marques pour obtenir un bon alignement vertical

6

GATE FRAME
Marco de la puerta
Cadre de portillon

E 1 ADJUST 2 D

5/32" (4mm)

E 3 4 D 5 6

7

Fix screw 'B' at bottom
Fijar el tornillo 'B' en la base
Vissez la vis B sur le bas

B

8

E F 1 F 2 E

9

ADJUST

MAGNALatch

Align marks for proper horizontal alignment
Alinear las marcas para la correcta posición horizontal
Alignez les marques pour obtenir un bon alignement horizontal

Installation Instructions
Procedimientos de instalación
Instructions d'installation

MAGNALatch® **Series 3**
Top Pull model

D® D&D Technologies
Hi-Performance Hardware

CAUTION: MagnaLatch provides vertical & horizontal adjustment for correct alignment. It is the installer's/owner's responsibility to ensure the gate properly latches at all times. See Steps 5 & 9.

PRECAUCIÓN: *MagnaLatch ofrece ajuste vertical y horizontal para una correcta alineación. Es responsabilidad del instalador/propietario asegurarse de que el pestillo de la puerta cierre correctamente en todo momento. Ver Pasos 5 y 9.*

ATTENTION : MagnaLatch permet un réglage vertical et horizontal pour obtenir un bon alignement. L'installateur/propriétaire est responsable de garantir que le portillon se verrouille à chaque fois. Consultez les étapes 5 et 9.

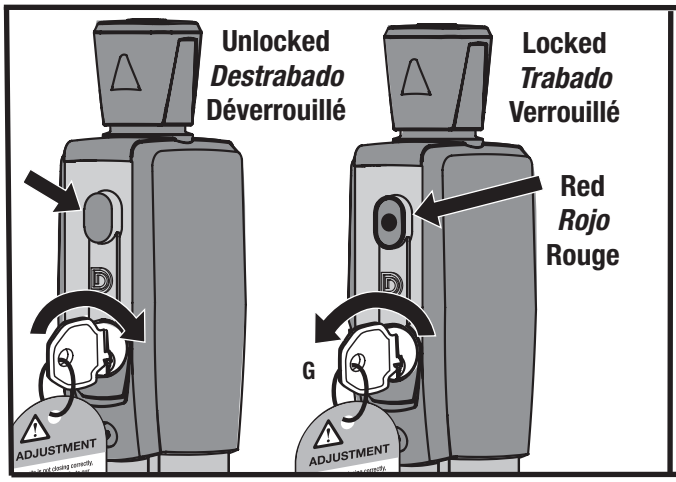

Key Tag supplied as reminder to maintain proper alignment

Placa para la llave suministrada para recordar que se debe mantener la alineación correcta

Étiquette de clé fournie pour rappeler l'importance d'un bon alignement

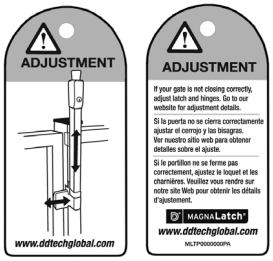

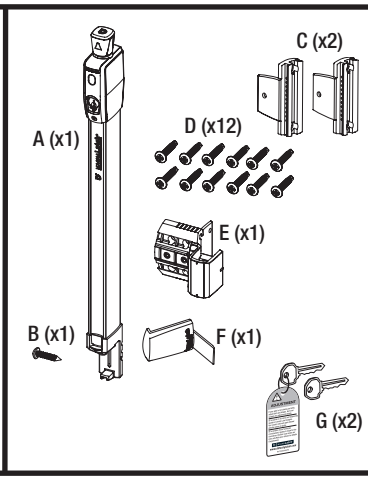

ENGLISH

Swimming pool fences, gates and latches cannot substitute for adult supervision.
If using this latch on a swimming pool gate, consult all appropriate local authorities for safety requirements.
The latch will operate properly only if installed and maintained in accordance with these instructions.

MAINTENANCE: REMOVE KEY FROM LOCK AFTER USE. Do not lubricate the latch with petroleum-based lubricants at any time; use only powdered graphite. Ensure all screws are tightened firmly and that the MagnaLatch® is kept free of sand, ice and other debris which could impair performance.

For a downloadable Adobe Acrobat (PDF) version of our Limited LIFETIME WARRANTY, go to our website at www.ddtechglobal.com

ESPANIOL

Las cercas, portones y pestillos de las piscinas no sirven como substituto de la supervisión por parte de adultos. Si se usa este pestillo en un portón de piscina, consulte a todas las autoridades locales correspondientes con respecto a los requisitos de seguridad. El pestillo funcionará debidamente sólo si se instala y mantiene de acuerdo a estas instrucciones.

MANTENIMIENTO: RETIRAR LA LLAVE DE LA CERRADURA DESPUÉS DE USAR.
No lubricar el cerrojo con lubricantes a base de petróleo en ningún momento; usar grafito en polvo únicamente. Asegurarse de que todos los tornillos se encuentren firmemente ajustados y que MagnaLatch® no contenga arena, hielo ni otros desechos que podrían impedir su funcionamiento.

Para bajar una versión en Adobe Acrobat (PDF) de nuestar GARANTÍA DE POR VIDA limitada dirigirse a nuestro sitio web www.ddtechglobal.com

FRANCAIS

La protection apportée par les barrières de piscine, portillons et autres serrures ne remplace en aucun cas la surveillance exercée par un adulte. Si vous désirez installer cette serrure sur le portillon d'une barrière de piscine, renseignez-vous sur les exigences de sécurité auprès des autorités locales concernées. Le bon fonctionnement de la serrure dépend uniquement d'une installation et d'une maintenance conformes aux présentes instructions.

ENTRETIEN : RETIREZ LA CLÉ DU VERROU APRÈS UTILISATION. Ne lubrifiez jamais le loquet avec des lubrifiants à base de pétrole, utilisez uniquement de la poudre de graphite. Assurez-vous que toutes les vis sont bien serrées et que le MagnaLatch® n'est pas couvert de sable, glace, ou de tout autre débris qui pourrait nuire à son fonctionnement.

Visitez notre site web à l'adresse www.ddtechglobal.com pour obtenir une version téléchargeable au format Adobe Acrobat (PDF) de notre GARANTIE À VIE limitée.

FRANCAIS (Europe only)

CONSEIL DE SÉCURITÉ

A lire attentivement et à conserver pour une consultation ultérieure
- La piscine peut constituer un danger grave pour vos enfants. Une noyade est très vite arrivée. Des enfants près d'une piscine réclament votre constante vigilance et votre surveillance active, même s'ils savent nager.
- Une barrière ne se substitue pas au bon sens ni à la responsabilité individuelle. Elle n'a pas pour but non plus de se substituer à la vigilance des adultes responsables qui reste le facteur essentiel pour la protection des jeunes enfants.
- Attention ! la sécurité n'est assurée qu'avec le moyen d'accès fermé, verrouillé.
- Le moyen d'accès doit être systématiquement fermé en cas d'absence, même momentanée du domicile.
- Prendre toutes les mesures afin d'empêcher l'accès du bassin aux jeunes enfants et ce, jusqu'à la réparation de la barrière ou du moyen d'accès lors d'un constat de dysfonctionnement ou lors du démontage de la barrière empêchant la sécurisation du bassin.
- La présence d'un parent et / ou d'un adulte responsable est indispensable lorsque le bassin est ouvert.
- Vérifier l'absence d'objet à proximité de la barrière pouvant inciter ou faciliter l'escalade de la barrière.
- La fermeture du moyen d'accès pour les systèmes à fermeture automatique doit être systématiquement vérifiée.
- Apprenez les gestes qui sauvent
- Mémoriser et afficher près de la piscine les numéros des premiers secours :
• Pompiers (18 pour la France)
• SAMU (15 pour la France)
• Centre antipoison

D® D&D Technologies
Hi-Performance Hardware

AUSTRALIA: Unit 6, 4-6 Aquatic Dr, Frenchs Forest NSW 2086
USA: 7731 Woodwind Drive, Huntington Beach, CA 92647
EUROPE: Niasstraat 1, 3531 WR Utrecht, The Netherlands.

www.ddtechglobal.com

Installation Instructions
Procedimientos de instalación
Instructions d'installation

TRUClose® HINGES SERIES 3

Regular models - Use 10g screws
Heavy Duty models - Use 12g screws

D® D&D Technologies

Adjust tension for correct closure.
See back page for tension adjustment instructions.

Ajuste la tensión para el cierre correcto.
Vea contraportada para instrucciones de ajuste de tensión.

Ajuster la tension pour la fermeture correcte.
Voir de retour la page pour les instructions d'ajustement de tension.

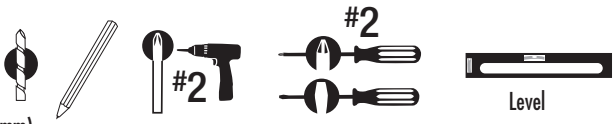

10g - 5/32" (4mm)
12g -11/64 " (4.5mm)

3 1/2" (90mm)

1/4 " (6mm) straight edge

GATE GAP: 2 ALIGNMENT LEG models (L2)
ESPACIO DE LA PUERTA CON : 2 PATAS DE ALINEAMIENTO
ESPACEMENT DE PORTILLON :
MODÈLES AVEC 2 PATTES D'ALIGNEMENT (L2)

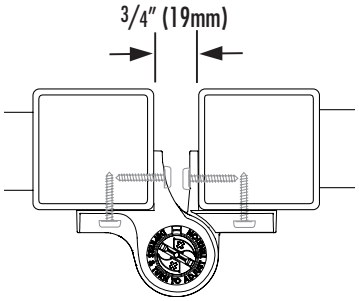

1

USE MAXIMUM SPACING BETWEEN HINGES

USAR MÁXIMO ESPACIO ENTRE BISAGRAS

UTILISER LE PLUS D'ESPACE POSSIBLE ENTRE LES CHARNIÈRES

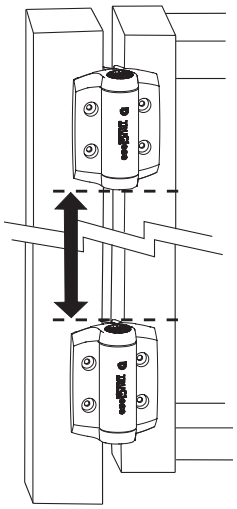

2 **INSTALL HINGES TO GATE FIRST**

INSTALAR BISAGRAS PRIMERO A LA PUERTA

INSTALLER LES CHARNIÈRES SUR LE PORTILLON EN PREMIER

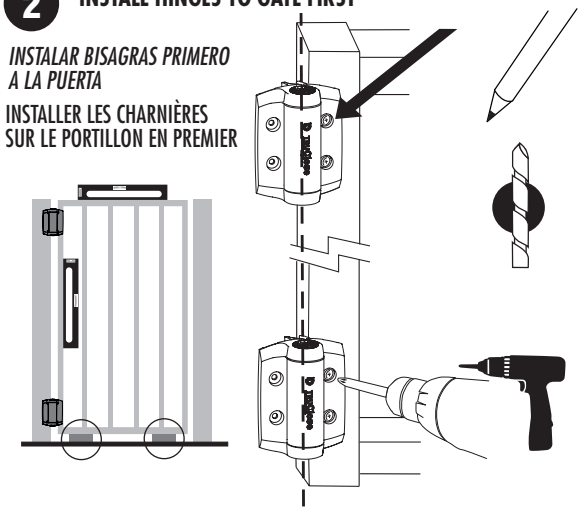

3 **INSTALL HINGES TO FENCE POST**

INSTALAR BISAGRAS AL POSTE DE LA CERCA

INSTALLER LES CHARNIÈRES AU POTEAU DE LA CLÔTURE

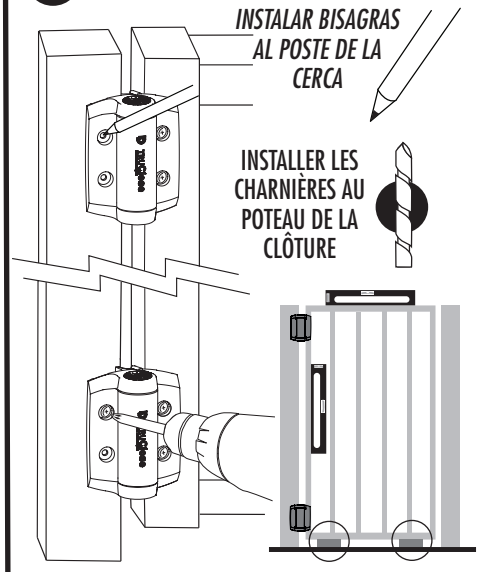

4 **TRIMS/COVERS**

RIBETES/CUBIERTAS

BORDURES/COUVERCLES

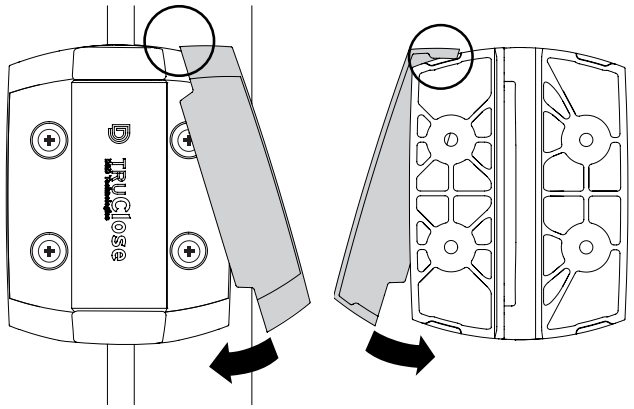

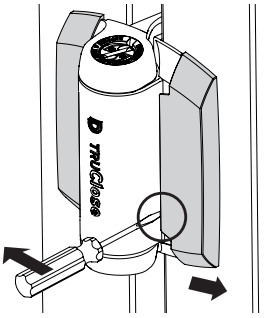

To remove covers
Retirar las cubiertas
Retrait des bordures/ couvercles

ADJUST TENSION WITH GATE CLOSED
AJUSTAR LA TENSIÓN CON LA PUERTA CERRADA
RÉGLER LA TENSION AVEC LE PORTILLON FERMÉ

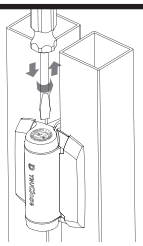

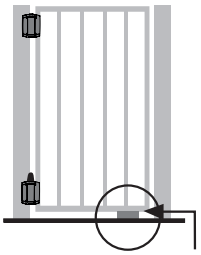

See other side for tension adjustment
Ver al reverso sobre el ajuste de la tensión
Consulter le verso pour le réglage de la tension

Important: For gates over 30lb (14kg), support gate while adjusting tension.

Importante: *Para las puertas de más de 30lb (14kg) sostener la puerta mientras se ajusta la tensión.*

Important : Supporter tout portillon de plus de 14 kg (30 livres) durant le réglage de la tension.

Optional Safety Cap prevents hinge being used as a foothold by toddlers.

Tapatornillos de seguridad ayudan a prevenir que la bisagra sea usada como punto de apoyo para pies en los niños pequeños.

Le capuchon optionnel de sécurité empêche les enfants de se tenir sur la charnière.

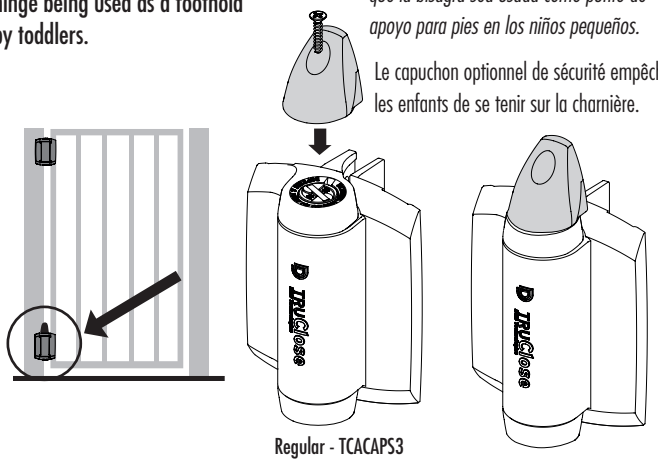

Regular - TCACAPS3
Heavy-Duty - TCHDCAPS3

TRUClose®

Maintenance Requirements

Note: The hinges will operate properly, and warranty is valid, only if installed in accordance with the instructions and specifications shown herein.

- Use only two (2) TruClose hinges on any one gate.
- Remove all other types of hinges and self-closing devices.
- Each hinge must have equal tension at all times.
- Ensure the gate does not swing through the line of the fence. Use a "gate stop" or a latch (with striker) to prevent this.
- Do not lubricate these hinges with petroleum-based lubricants at any time. Use only powdered graphite.
- Ensure the hinges are kept free of sand, ice and other debris that could impair effective operation.
- Do not disassemble these hinges at any time.
- Do not paint or apply an additional finish to the hinges.
- Never remove hinges from gate until spring tension is released.
- Do not physically cut, drill, countersink, machine or grind any part of the hinge leaves.

For a downloadable Adobe Acrobat (PDF) version of our Limited LIFETIME WARRANTY, go to our website at www.ddtechglobal.com

Requisitos de mantenimiento

Observación: Las bisagras funcionarán correctamente y la garantía será válida únicamente si su instalación se realiza de acuerdo con las instrucciones y especificaciones aquí descritas.

- Usar únicamente dos (2) bisagras TruClose por puerta.
- Retirar cualquier otro tipo de bisagra existente y aparatos de autocierre.
- Cada bisagra deberá tener la misma tensión en todo momento.
- Asegurarse de que la puerta no se balancee a través de la línea de la cerca. Usar un tope para puertas o cerrojo (con cerradura hembra) para evitar que esto ocurra.
- No lubricar estas bisagras con lubricantes a base de petróleo, en ningún momento. Usar únicamente grafito en polvo.
- Asegurarse de mantener las bisagras sin arena, hielo ni ningún otro tipo de escombro que podría dificultar la efectividad de la operación.
- No desarmar estas bisagras en ningún momento.
- No pintar ni aplicar acabados sobre estas bisagras.
- No retirar nunca las bisagras de la puerta hasta que se suelte la tensión del resorte.
- No cortar, perforar, hacer un avellanado, usar una máquina ni esmerilar físicamente ninguna parte de las hojas de las bisagras.
- Por razones de seguridad, retirar los pernos o tornillos sobresalientes después de la instalación mediante su corte, esmerilado o limado.

Para un version de nuestra garantia limitada de por vida descargable en Adobe Acrobat (pdf), vaya a nuestro sitio Web en www.ddtechglobal.com

Exigences d'entretien

Remarque : Les charnières fonctionnent correctement, et la garantie est valide, seulement si elles sont installées en accord avec les instructions et spécifications décrites ici.

- Utilisez uniquement deux (2) charnières TruClose sur chaque portillon.
- Retirez tout autre type de charnière ou dispositif de fermeture automatique.
- Chaque charnière doit avoir la même tension à tout instant.
- Assurez-vous que le portillon ne s'ouvre pas au-delà de la clôture. Utilisez un "butoir de portillon" ou un loquet (avec une gâche) pour éviter ceci.
- Ne graissez jamais ces charnières avec des lubrifiants à base de pétrole. Utilisez uniquement de la poussière de graphite.
- Assurez-vous qu'il n'y ait pas de sable, de glace ou d'autres débris dans les charnières qui pourraient en affecter le fonctionnement.
- Ne démontez pas ces charnières pour le moment.
- Ne peignez pas ou appliquez de revêtement aux charnières.
- Enlevez les charnières du portillon seulement s'il n'y a pas de tension dans les ressorts.
- Aucune partie des paumelles de la charnière ne devrait être coupée, percée, fraisée, usinée, ou meulée.
- Pour des raisons de sûreté, retirez les écrous et vis qui dépassent suite à l'instal lation en les coupant, et/ou en les limant.

Pour obtenir une version Adobe Acrobat (PDF) téléchargeable de notre GARANTIE À VIE limitée, visitez notre site Web à www.ddtechglobal.com

HINGE RANGE	Maximum Self-Closing Weight	Maximum Gate Dimensions
REGULAR RANGE	66lb (30kg) per pair	*5'Hx3'W (1524x915mm)
HEAVY DUTY RANGE	154lb (70kg) per pair	*6'Hx4'W (1830x1220mm)

**Always space the hinges as far apart from each other as possible for maximum holding strength.*

GRADO DE ABERTURA DE LA BISAGRA autocierre	*Peso máximo de la puerta*	*Dimensiones máximas de*
VARIACIÓN REGULAR	*66lb (30kg) por par*	**5'Hx3'W (1524x915mm)*
GRADO DE ABERTURA REFORZADO	*154lb (70kg) por par*	**6'Hx4'W (1830x1220mm)*

**Siempre separar las bisagras lo más posible una de otra para obtener la máxima resistencia de sostenimiento.*

RAYON DE LA CHARNIÈRE	Poids maximum pour fermeture automatique	Dimensions maximums du portillon
RAYON NORMAL	30 kg (66 livres) par paire	*5'Hx3'W (1524x915mm)
RAYON POUR PORTILLON LOURD	70 kg (154 livres) par paire	*6'Hx4'W (1830x1220mm)

**Espacer toujours les charnières le plus possible l'une de l'autre pour obtenir le meilleur support.*

QUICK & EASY TENSION ADJUSTMENT!

1 - Depress
2 - Turn
3 - Release

AJUSTE DE TENSIÓN RÁPIDO Y FÁCIL

1 - Presionar
2 - Girar
3 - Suelte

RÉGLAGE RAPIDE ET FACILE DE LA TENSION !

1 - Appuyer
2 - Tourner
3 - Relâcher

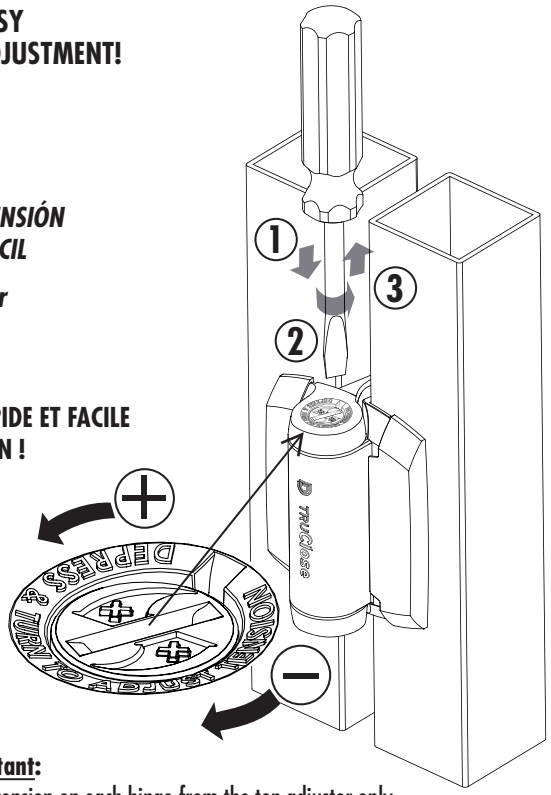

Important:
Adjust tension on each hinge from the top adjustor only

Importante:
Ajustar la tensión de cada bisagra desde la parte superior únicamente

Important :
Régler la tension sur chaque charnière uniquement à partir du haut.

D&D Technologies
Hi-Performance Hardware

AUSTRALIA: Unit 6, 4-6 Aquatic Dr, Frenchs Forest NSW 2086
USA: 7731 Woodwind Drive, Huntington Beach, CA 92647
EUROPE: Niasstraat 1, 3531 WR Utrecht, The Netherlands.

www.ddtechglobal.com

CADetailer Ltd

SPECIFICATION
of work to be done and materials to be used in carrying out the works shown on the accompanying drawings

Kendall

Project Specification
Lot 81 The Sanctuary, Mangawhai, New Zealand
Project Ref:

Printed: 22 June 2021

COASTAL HOMES

masterspec

Specification built using Masterspec software
Project ID: 226717 - 218627

TABLE OF CONTENTS

1013	DOCUMENT CONTROL	3
1220	PROJECT	4
1232	INTERPRETATION & DEFINITIONS	6
1233	REFERENCED DOCUMENTS	8
1234	DOCUMENTATION	9
1238	AS BUILT DOCUMENTATION	14
1239	OPERATION & MAINTENANCE	15
1270	CONSTRUCTION	18
2210	PREPARATION & GROUNDWORK	27
3155FR	FIRTH RIBRAFT® FLOOR SYSTEMS	30
3813F	FUTUREBUILD® NZ - LVL STRUCTURAL FRAMING	36
3820	CARPENTRY	38
4161P	PAUL INDUSTRIES UNDERLAYS, FOIL AND DPC	42
4161T	THERMAKRAFT UNDERLAYS, FOILS, DPC, DPM, & TAPES	45
4171E	ECOPLY® BARRIER RIGID AIR BARRIER SYSTEM	49
4239JH	JAMES HARDIE® SOFFITS	52
4282C	SPECIALIZED EZPANEL AAC PANEL CLADDING SYSTEM	56
4323G	GERARD® STEEL TILE ROOFING	64
4521	ALUMINIUM WINDOWS AND DOORS	70
4610	GLAZING RESIDENTIAL	78
4710EW	EARTHWOOL® GLASSWOOL INSULATION	83
4821	FLASHINGS	90
5113G	GIB® PLASTERBOARD LININGS	93
5151	INTERNAL TRIM	99
5230	INTERIOR DOORS	101
5510	JOINERY & PROPRIETARY FIXTURES	103
6221M	MAPEI® TILING SOLUTIONS	105
6511	CARPETING	114
6700	PAINTING GENERAL	117
6711	PAINTING EXTERIOR	122
6721	PAINTING INTERIOR	123
7112	WATER STORAGE TANKS	124
7120	HOT & COLD WATER SYSTEM	128

7151	SANITARY FIXTURES, TAPWARE & ACCESSORIES	134
7411	RAINWATER SPOUTING SYSTEMS	139
7420	SANITARY SYSTEMS	143
7430	DRAINAGE	145
7513	CENTRAL HEATING SYSTEMS	147
7612	RESIDENTIAL EXTRACT SYSTEMS	149
7701	ELECTRICAL BASIC	152

1013 DOCUMENT CONTROL

1 DOCUMENT CONTROL

Document Control

1.1 PREPARED BY

Company:	CADetailer Ltd.
Postal Address:	10 Danny Place
Suburb:	Pyes Pa
City:	Tauranga
Telephone:	021 471 119
Email:	marc@cadetailer.co.nz

1.2 DOCUMENT DETAILS

Project Address:	Lot 81 The Sanctuary, Robert Hastie Drive, Mangawhai
Client:	CH Northland Ltd.
Client Postal Address:	12 William Gilbert Drive, Mangawhai
Client Telephone:	021 222 4833

1220 PROJECT

1 GENERAL

This general section describes the project including:

- A description of the work
- Design construction safety
- Principal's Health & Safety matters
- Site description, features and restrictions
- Design parameters for design by contractor
- Archaeological discovery

1.1 READ ALL SECTIONS TOGETHER

Read all general sections together with all other sections.

1.2 DESCRIPTION OF THE WORK

Single level residential dwelling clad in EZpanel over cavity. RibRaft Slab Foundation, Timber framed walls, Double glazed Aluminium Joinery, Prefabricated timber roof trusses, metal tile roofing. Dwelling contains 4 bedrooms, open plan living, dining, and kitchen with scullery, a bathroom and ensuite, seperate toilet, laundry, double garage with ride-on mower garage and pump room for pool.

1.3 RESTRICTED BUILDING WORK

This project includes Restricted Building Work.

Design Construction Safety

1.4 DESIGN CONSTRUCTION SAFETY

The project designers are unaware of unusual or atypical features, which a reasonably experienced contractor may not be aware of, that may present a hazard or risk during a typical construction process. The Contractor is still required to undertake its own assessment, to determine if they consider there are any further safety matters and provide for these in carrying out the construction of the work.

Principal's Health & Safety Matters

1.5 PRINCIPAL'S KNOWN SITE HAZARDS

Site hazards known to the principal are to be listed before construction commences.

1.6 PRINCIPAL'S SITE HEALTH AND SAFETY PLAN

A copy of the principal's site health and safety plan must be on site at all times.

Site

1.7 SITE

The site consists of: Moderate to steep sloping topography in a rural environment
As shown on drawing: 101, 102

1.8 LEGAL DESCRIPTION

The site of the works, the street address and the legal description are shown on the drawings.

Site environment - Durability

1.9 EXPOSURE ZONE

The exposure zone is to NZS 3604, Section 4 Durability, 4.2 Exposure zones and NZBC E2/AS1.
The site zone is: C

Site environment - Wind

1.10 WIND DESIGN PARAMETERS - NON SPECIFIC DESIGN

The design wind pressures are to NZS 3604, Table 5.4 Determination of wind zone, up to and including Extra High Wind Zone.
Building wind zone High

Site environment - Seismic

1.11 EARTHQUAKE ZONE - NON SPECIFIC DESIGN

The zone is to NZS 3604, Section 5 Bracing design, 5.3 Earthquake bracing demand.
The earthquake zone 1
is:

Archaeological discovery

1.12 REPORT FINDING ANY ANTIQUITIES AND ITEMS OF VALUE

Report the finding of any fossils, antiquities and other items of value, to the Contract Administrator. All to remain undisturbed until approval is given for removal.

Pre-1900, items or evidence of human activity on the site, come under the Heritage New Zealand Pouhere Taonga Act 2014. If such items or evidence is discovered work must stop immediately and the Contract Administrator must be notified immediately. The site may be classified as an Archaeological Site under the Act, and the Contract Administrator or Owner must contact the Heritage New Zealand for authority to proceed.

Post-1900 items remain the property of the owner, pre-1900 items may remain the property of the owner or the Crown subject to what is found.

There are no known archaeological information relating to this site.

1232 INTERPRETATION & DEFINITIONS

1 GENERAL

This general section relates to definitions and interpretation that are used in this specification.

Definitions

1.1 DEFINITIONS

Hold point:	A stage of the construction where the contract administrator and any other nominated person requires notice to be given that particular work is to be carried out. Work may not proceed on that particular part until the contract administrator and any other nominated person has advised that work can continue. A notice period of 2 Working Days is required unless stated otherwise.
Notification point:	A stage of the construction where the contract administrator and any other nominated person requires notice to be given that particular work is to be carried out. Work may continue and the contract administrator and any other nominated person may choose whether or not they wish to witness the particular work being carried out. A notice period of 2 Working Days is required unless stated otherwise.
Product:	A thing or substance produced by natural process or manufacture.
Proprietary:	Identifiable by naming the manufacturer, supplier, installer, trade name, brand name, catalogue or reference number.
Provide and fix:	"Provide" or "fix" or "supply" or "fix" if used separately mean provide and fix unless explicitly stated otherwise.
Required:	Required by the documents, the New Zealand Building Code or by a statutory authority.
Review:	Review by the contract administrator and other consultants is for general compliance only. Review does not remove the need for the contractor to comply with the stated requirements, details and specifications of the manufacturers and suppliers of individual components, materials and finishes. Neither can the review be construed as authorising departures from the contract documents.
Working day:	Working day means a calendar day other than any Saturday, Sunday, public holiday or any day falling within the period from 24 December to 5 January, both days inclusive, irrespective of the days on which work is actually carried out.
Workplace:	Workplace means the place where work is being carried out, or is customarily carried out, for a business or undertaking including any place where a worker goes, or is likely to be, while at work (under Health and Safety at Work Act 2015).

1.2 PERSONNEL

Principal:	The person defined as "Principal" in the conditions of contract.
Contractor:	The person contracted by the principal to carry out the contract.
Contract administrator:	The person appointed by the principal to administer the contract on the principal's behalf. Where no person has been appointed by the principal, it means the principal or the principal's representative.

1.3 ABBREVIATIONS

The following abbreviations are used throughout the specification:

AAMA	American Architectural Manufacturers Association
AS	Australian Standard
AS/NZS	Joint Australian/New Zealand Standard
ASTM	American Society for Testing and Materials
AWCINZ	Association of Wall and Ceiling Industries of New Zealand Inc.
BCA	Building Consent Authority
BRANZ	Building Research Association of New Zealand
BS	British Standard
COP	Code of practice
CSIRO	Commonwealth Scientific and Industrial Research Organisation
HERA	Heavy Engineering Research Association
LBP	Licensed Building Practitioner
MBIE	Ministry of Business, Innovation and Employment
MPNZA	Master Painters New Zealand Association Inc
NZBC	New Zealand Building Code
NZS	New Zealand Standard
NZS/AS	Joint New Zealand/Australian Standard
NZTA	New Zealand Transport Agency
NUO	Network Utility Operator
OSH	Occupational Safety and Health
PCBU	Person Conducting a Business or Undertaking (under Health and Safety at Work Act 2015)
RBW	Restricted Building Work
SARNZ	Scaffolding and Rigging New Zealand Inc
SED	Specific Engineering Design
TA	Territorial Authority
TNZ	Transit New Zealand (Transit New Zealand is now New Zealand Transport Agency NZTA - some specifications are still prefixed TNZ)

1.4 DEFINED WORDS

Words defined in the conditions of contract, New Zealand Standards, or other reference documents, to have the same interpretation and meaning when used in their lower case, title case or upper case form in the specification text.

1.5 WORDS IMPORTING PLURAL AND SINGULAR

Where the context requires, words importing singular only, also include plural and vice versa.

1233 REFERENCED DOCUMENTS

1 GENERAL

1.1 REFERENCED DOCUMENTS

Throughout this specification, reference is made to various New Zealand Building Code Compliance Documents (NZBC __), acceptable solutions (__ AS_) and verification methods (__ VM_) for criteria and/or methods used to establish compliance with the New Zealand Building Code.

Reference is also made to various standards produced by Standards New Zealand (NZS, AS/NZS, NZS/AS), overseas standards and to listed Acts, Regulations and various industry codes of practice and practice guides. The latest edition (including amendments and provisional editions) at the date of this specification applies unless stated otherwise.

It is the responsibility of the contractor to be familiar with the materials and expert in the techniques quoted in these publications.

Documents cited both directly and within other cited publications are deemed to form part of this specification. However, this specification takes precedence in the event of it being at variance with the cited documents.

1.2 DOCUMENTS

Documents referred to in the GENERAL sections are:

NZBC F5/AS1	Construction and demolition hazards
AS/NZS 1170.2	Structural design actions - Wind loads
NZS 1170.5	Structural design actions - Earthquake actions - New Zealand
AS/NZS 3012	Electrical installations - Construction and demolition sites
NZS 3109	Concrete construction
NZS 3114	Specification for concrete surface finishes
NZS 3602	Timber and wood-based products for use in building
NZS 3604	Timber-framed buildings
NZS 4210	Masonry construction: Materials and workmanship
NZS 4781	Code of Practice for Safety in Welding and Cutting
AS/NZS 5131	Structural steelwork - Fabrication and erection
NZS 6803	Acoustics - Construction Noise

Building Act 2004
Building Regulations 1992
Health and Safety at Work Act 2015
Health and Safety at Work (General Risk and Workplace Management) Regulations 2016
Health and Safety at Work (Hazardous Substances) Regulations 2017
Health and Safety in Employment Regulations 1995
New Zealand Building Code
Heritage New Zealand Pouhere Taonga Act 2014
Resource Management Act 1991
Smoke-free Environments Act 1990

WorkSafe	Guidelines for the provision of facilities and general safety in the construction industry
WorkSafe	Good Practice Guidelines - Excavation Safety
WorkSafe	Scaffolding in New Zealand - Good Practice Guidelines
WorkSafe	Managing Work Site Traffic - Good Practice Guidelines

1234 DOCUMENTATION

1 GENERAL

This general section relates to documentation required by the Territorial Authority / Building Consent Authority for compliance with the New Zealand Building Code. It also includes documentation relating to:

- Substitutions
- Manufacturers' documents
- Branded work sections
- Care of construction documents
- Confidentiality of documents
- Receipt of construction documents

Building Consent Authority documentation

1.1 BUILDING CONSENT

Obtain the original building consent forms and documents from the owner and keep them on site, preserve the condition of consent forms and documents. Liaise with the building consent authority for all notices to be given and all inspections required during construction to ensure compliance. Return the consent form and documents to the owner on completion.

1.2 BUILDING CONSENT COMPLIANCE

It is an offence under the Building Act 2004

- to carry out any work not in accordance with the building consent.
- to carry out Restricted Building Work by anyone other than a Licensed Building Practitioner licensed for that type of work.

The resolution of matters concerning building code compliance to be referred to the contract administrator for a direction and then if required to the BCA for consent.

Where any alteration is requested by the territorial authority or any other authority, do not undertake such alteration until the matter has been referred to the contract administrator for direction.

1.3 PROJECT PERSONNEL

Provide names and contact details of the contractor's key personnel and tradespersons who are involved with the project. Review the list once a month and reissue it if changes have been made.

Licensed Building Practitioner documentation

1.4 LICENSED BUILDING PRACTITIONERS

Provide LBP details. Provide names, LBP numbers, areas of practice and contact information. Provide this information to the BCA before commencing work on the Restricted Building Work in the form required by the BCA. Advise the BCA of any change to an LPB previously advised.

Include the following as applicable

- Site LBP
- Carpenter
- Foundations 1 Concrete foundation walls and concrete slab-on-ground constructor
- Foundations 2 Concrete or timber pile foundations constructor
- Bricklaying and block laying 1 Brick / masonry veneer
- Bricklaying and block laying 2 Structural masonry - Bricklayer / Blocklayer
- Roofing 1 Concrete / clay tile roofer
- Roofing 2 Profiled metal roofer and/or wall cladding installer
- Roofing 3 Metal tile roofer
- Roofing 4 Membrane roofer
- Roofing 5 Torch on membrane roofer
- Roofing 6 Liquid membrane roofer
- Roofing 7 Shingle / slate roofer
- External plastering 1 Solid plasterer
- External plastering 2 Proprietary Plaster Cladding Systems (PPCS) plasterer

Also provide names and contact details of the following

- Registered drainlayer
- Registered plumber
- Registered gasfitter
- Registered electrician

1.5 RECORD OF WORK

Where Restricted Building Work is carried out by a LBP, on completion provide a Record of Work. Provide copies to both the BCA and the Contract Administrator.

Compliance information

1.6 DOCUMENTATION REQUIRED FOR CODE COMPLIANCE

Information may be required either as a condition of the contract documents or as a condition of the building consent. It may include the following:

- Applicators approval certificate from the manufacturer / supplier
- Manufacturer's / supplier's warranty
- Installer / applicator's warranty
- Producer Statement (PS1) - Design
- Producer Statement (PS3) - Construction from the applicator / installer
- Producer Statement (PS4) - Construction review from an acceptable suitably qualified person

Refer to the general sections for the requirements for compliance information to be provided by the contractor.

Refer to the building consent for the requirements for compliance information to be provided by the contractor.

Obtain required documents from the relevant parties for delivery to the contract administrator after the final inspection has been carried out by the BCA.

1.7 PRODUCER STATEMENTS

When producer statements verifying construction are required, provide copies to both the Building Consent Authority and the Contract Administrator. Provide producer statements in the form required by the BCA.

Residential building contract

1.8 CHECKLIST

If requested provide evidence of the prescribed checklist given to the residential client.

1.9 DISCLOSURE STATEMENT

If requested provide evidence of the disclosure statement given to the residential client.

1.10 BUILDING CONTRACT

If requested provide evidence of the written building contract that the residential customer has signed.

1.11 DOCUMENTATION REQUIRED ON COMPLETION

As soon as practicable after completion of the building work, provide in writing the following information and documentation to the client and the relevant territorial authority.

Information and documentation relating to:

- The identity of the building contractor and the subcontractors who carried out the work.
- Maintenance requirements for any products incorporated in the building.

If applicable also provide any guarantee or insurance obtained by the building contractor in relation to the building work.

Substitutions

1.12 ACCEPTABLE PRODUCT/MATERIAL SUPPLIERS

Where a product or material supplier is named in SELECTIONS, the product/material must be provided by the named supplier. Where more than one named supplier, any one of the named suppliers will be acceptable.

1.13 NO SUBSTITUTIONS

Substitutions are not permitted to any of the specified products and systems listed in a section unless specified otherwise. If a product is not available then immediately contact the contract administrator for direction.

1.14 PROPOSED SUBSTITUTIONS

Substitution of products or systems contained within branded work sections is not allowed. The contractor may propose substitutions to products within non branded work sections, when the contractor has determined that the proposed substitution is an alternative to the specified product. The Contract administrator is not bound to accept any substitutions. Submit a draft proposal detailing the substitution to the contract administrator before proceeding with full notification.

1.15 NOTIFICATION OF SUBSTITUTIONS

Notify the contract administrator of proposed substitution of specified products. Notification to include but not be limited to:

- Product identification
- Manufacturer's name, address, telephone number, website and email address
- Detailed comparison between the properties and characteristics of the specified product and the proposed substitution
- Statement of NZBC compliance including durability
- Details of manufacturer warranties

Plus an assessment of:

- Any changes required to the programme including any extension of time required
- Any consequential effects of the proposed substitution
- Any effect the substitution may have on Health & Safety requirements
- Allowance for time and cost for re-design and documentation (if applicable)
- Allowance for time and cost for obtaining an amendment to the Building Consent (if applicable)
- Any change in cost associated with the proposed substitution

and if requested:

- All current manufacturer's literature on the product
- Accreditations and appraisals available
- Reference standards
- Product limitations
- Samples
- List of existing installations in the vicinity of the project

1.16 ACCEPTANCE OF SUBSTITUTIONS

Acceptance of any proposed substitutions will be given in writing by the contract administrator.

Amendments to issued Building Consent

1.17 CONTRACTOR AMENDMENTS TO BUILDING CONSENT

Where the contractor has sought acceptance of a substitution or a variation which is for the contractor's own convenience and the substitution or variation requires an amendment to the Building Consent, the contractor must apply for and obtain the required amendment.

The contractor must:

- Obtain approval for substitutions from the contract administrator.
- Prepare and provide to the BCA all documentation required for the amendment.
- Pay all fees and other costs associated with this amendment.
- Where the amendment affects other approved plans, also amend those plans.

1.18 PRINCIPAL AMENDMENTS TO BUILDING CONSENT

Where the principal is proposing a substitution or a variation which requires an amendment to the Building Consent, the contractor must provide to the principal information that the contractor has that is required for the amendment.

The principal will:

- Prepare and provide to the BCA all documentation required for the amendment.
- Pay all fees and other costs associated with this amendment.
- Where the amendment affects other approved plans, also amend those plans.

Manufacturer's documents

1.19 MANUFACTURER'S AND SUPPLIER'S INSTALLATION REQUIREMENTS

Manufacturer's and supplier's requirements, instructions, specifications or details mean those issued by them for their particular product, material or component and are the latest edition.

1.20 CONTRACTOR TO OBTAIN CURRENT DOCUMENTATION

Where manufacturer’s installation, application and execution requirements are referred to in this specification, the Contractor must ensure they are fully aware of this documentation. Whenever necessary obtain and keep on site the relevant latest version of such documentation and make it available to workers carrying out that part of the work.

1.21 DOCUMENTATION PROVIDED FOR BUILDING CONSENT

Documentation including manufacturer’s installation instructions, specification data sheets, producer statements, BRANZ and similar appraisals may be included in the issued Building Consent. These documents have been provided only to demonstrate compliance with the NZBC.

Branded work sections

1.22 BRANDED PRODUCTS / SYSTEMS

Where branded products and systems are specified, all products and components of the system must be as per the specification.

1.23 CROSS REFERENCED WORK SECTIONS

If any related work is cross referenced to a generic work section, but only the equivalent branded section is included in the specification, use that branded section. Confirm with the contract administrator if there is any doubt.

Care of construction documents

1.24 CONSTRUCTION ISSUE

Take receipt of the plans, specifications and other documents issued “for construction”. Keep at least one copy on site available for use by all on site workers. Keep a record of copies provided to others including subcontractors. Protect the documents as appropriate. Obtain replacement copies for documents that have become damaged.

1.25 REVISIONS TO CONSTRUCTION ISSUE

Where revised plans and other documents are issued ensure that superseded documents are deleted from the working sets. Ensure that subcontractors are provided with amended documents. Delete superseded documents by either:

- removing them from the working copy of the construction issue; or
- marking them as superseded

1.26 RETURN DOCUMENTS ISSUED FOR CONSTRUCTION

On completion of the contract works:

- Keep such copies of the plans, specification and other documents as reasonably required for contractor's record purposes.
- Retrieve all other copies no longer required by parties.
- Agree method of disposal of such documents with the Contract Administrator.

The Contract Administrator will advise whether such documents shall be:

- delivered to the Contract Administrator/Owner; or
- disposed of by normal waste disposal methods; or
- disposed of by secure document disposal methods.

Confidentiality of documents

1.27 CONFIDENTIALITY OF DOCUMENTS

Documents shall not be given or copied to others who do not require them for carrying out services required for the construction of the works. Documents are only to be used for the contract. Maintain confidentiality of documents.

1238 AS BUILT DOCUMENTATION

1 GENERAL

This general section relates to common requirements for the preparation, submission and review of as built documentation referred to within this specification and referred to within separate specifications/documents relating to this project. Detailed requirements for as built documentation for particular parts of the work may be included in specific work sections.

1.1 SCHEDULE SECTION

Refer to 1238S1 SCHEDULE OF AS BUILT DOCUMENTATION for work sections contained in this specification that have requirements for as built documentation.

1.2 AS BUILT DOCUMENT REQUIREMENTS

Where requirements for the as built documents and records are not stated in a specific section, they shall include:

As built drawings recording:

- The actual positions as constructed of all sewer, stormwater, sanitary plumbing, piped and ducted services, electrical and mechanical services.
- Inverts and locations of services at key points within the building and at the property lines.
- Dimension services in relation to the structure and building grid lines.
- Ductwork, piping, conduit and equipment, including such items provided for future use.
- Depth of various elements of foundations in relationship to the ground floor level
- Field changes of dimensions
- Other significant deviations and changes which are concealed in construction and cannot be identified by visual inspection
- Access doors and panels

Records of:

- Products and materials selected for alternatives specified
- Approved substitutions and accepted alternatives
- Other approved changes and deviations to items specified.

1.3 PROVISIONAL AS BUILT DOCUMENTS

Prior to practical completion provide provisional/draft as built documents in sufficient detail to allow the principal to operate, maintain, adjust and re-assemble the contract works and to allow for review by the reviewer. Where no named reviewer has been nominated, submit the as built documentation to the contract administrator. Submit in hard copy and electronic form.

1.4 AS BUILT DOCUMENT REVIEW

As built document review indicates only that the reviewer is satisfied that the documents are legible. The review is not a check of the accuracy or completeness of the documents, however the reviewer may comment on any aspect of the documentation and require the documents to be revised and resubmitted. Review of as built documents does not relieve the contractor of responsibility for their correctness.
Where no time is stated in a specific section, allow 10 working days for review by the reviewer. Where a large amount of documentation is involved more time will be necessary.

1.5 COMPLETE AS BUILT DOCUMENTS

Prior to the end of the defects notification/liability period, provide complete as built documents reflecting any review requirements, with all Information of good quality and properly titled, numbered, cross-referenced and dated. Provide documents in sufficient detail to allow the principal to operate, maintain, adjust and re-assemble the contract works. Submit in hard copy and electronic form to the contract administrator.

1.6 AS BUILT DOCUMENTS - ELECTRONIC COPY

Provide an electronic copy of the as built documents in the following format:

Drawings:	PDF format (in addition provide DWG files if available)
Other documents:	PDF format

1239 OPERATION & MAINTENANCE

1 GENERAL

This general section relates to operation and maintenance (O&M) documentation referred to within this specification and referred to within separate specifications/documents relating to this project. This documentation is required by the principal so that they can operate and maintain the contract works.

1.1 SCHEDULE SECTION

Refer to 1239S1 SCHEDULE OF OPERATION & MAINTENANCE INFO for work sections contained in this specification that have requirements for:

- Information for operation and maintenance
- Operation and maintenance manuals
- Maintenance contract proposals

Operation and maintenance documents

1.2 OPERATION AND MAINTENANCE INFORMATION - BUILDING ACT

Provide in writing the information and documentation prescribed by regulations made under the Building Act, to the owner/principal and the relevant territorial authority.

1.3 OPERATION AND MAINTENANCE INFORMATION

Provide operation and maintenance documentation necessary to operate and maintain the works. This documentation is to include:

- Contractors name and contact details.
- A complete list of subcontractors' names, addresses and telephone numbers noting which portions of the contract each provided.
- A complete list of equipment and appliances including serial numbers, manufacturers' names and sources of supply.
- Copies of all manufacturers' and suppliers' product literature containing maintenance requirements/instructions, for any products in the building work.
- Information for operation and maintenance as required by work sections.
- Operation and maintenance manuals as required by work sections.
- Maintenance contract proposals as required by work sections.
- Final as built documents.
- Originals of all warranties and guarantees properly executed.
- Other information listed or referred to in this general section.
- Operation and maintenance information required by other project documents.

1.4 MAINTENANCE REQUIREMENTS

Provide details of any maintenance requirements required by the Building Act. In addition provide maintenance requirements for items including:

- Details of suggested building washing programme.
- Details of suggested re-painting programme.
- Location of flushing points for sub soil drainage systems.
- Location of surface water filter systems requiring regular cleaning.
- Overflow relief gully location and means of keeping charged.

1.5 APPLIANCE MANUALS AND OPERATING INSTRUCTIONS

Provide appliance manuals and operating information for all appliances including details of all isolating valves and switches including:

- Water supply isolating valve.
- Location of isolating valves for appliances including dishwasher, clothes washer and fridge with and icemaker connection.
- Gas supply isolating valve.
- Electrical main switch and all sub boards.
- Location of isolating switches for electrical appliances including cooker and cook top, kitchen extract system, electric under floor heating.
- Fire and heating device operating instructions.

1.6 SELECTIONS INFORMATION

Provide details of actual selections used in the construction of the works including:

- Tapware type and supplier details.
- Sanitary ware including accessories type and supplier details.
- Light fitting type and supplier details.
- Door hardware type and supplier details.
- Carpet type and colour including underlay and the supplier details.
- Vinyl flooring type and colour including supplier details.
- Overlay timber floor type and supplier details.
- Tile type and supplier details.
- Fire supplier details.
- Aluminium joinery system and finish.
- Paint type and colours used.

Include brochures and other information included with the items supplied.

1.7 SELECTIONS INFORMATION - SUBSTITUTIONS

Provide details of any selections used in the construction of the works that are different from what was specified.

Documentation format

1.8 O&M DOCUMENTATION FORMAT

Unless otherwise specified in a work section,

- Provide O&M drawings at scales appropriate to the detail to enable good legibility.
- Provide manufacturers documentation at the original scale.
- Provide written text generally in A4 format using a font not less than 10 point.

Submit O&M documentation in both hard copy and as electronic portable document format (PDF) files.

Submission and review

1.9 O&M DOCUMENTATION SUBMISSION & REVIEW

Unless otherwise specified in a work section, provide draft O&M documentation no later than the date of practical completion or the date on which the principal takes occupation of the works, whichever occurs first.

Submit O&M documentation to the named reviewer for review.

- Where no time is stated in a specific section, allow 10 working days for review by the reviewer. Where a large amount of documentation is involved more time will be necessary.
- Where no person is named in a specific section as the reviewer, submit the O&M documents to the contract administrator.
- Submit a proposed index system (as required for final documentation) to the contract administrator for review.

O&M review indicates only that the reviewer is satisfied that the documents are legible. The review is not a check of the accuracy of the documents, however the reviewer may comment on any aspect of the documentation and require the documents to be revised and resubmitted. Review of operation and maintenance documentation does not relieve the contractor of responsibility for the correctness of the documentation.

The reviewer may advise that:

- The O&M documentation has been reviewed and has been accepted without the need for further modification. The information can be included in the final documentation; or
- The O&M documentation has been reviewed and the information can be included in the final documentation subject to revision required by notes, annotations or comments provided; or
- The O&M documentation has been reviewed and is not acceptable, refer to notes, annotations or comments provided. Resubmit corrected/altered documentation for review.

Amalgamate the reviewed accepted and corrected O&M documentation into the final O&M documentation

Final documentation

1.10 SUBMISSION OF FINAL DOCUMENTATION

Prior to the end of the defects notification/liability period, provide complete O&M documentation in both hardcopy and electronic form.

1.11 FINAL O&M DOCUMENTATION - HARDCOPY

Provide the hard copy version of the O&M documentation in a loose-leaf binder with a contents index identifying operation and maintenance documents, requirements, manuals, operating instructions and selections. In addition include the project name, contractor's name and the date of practical completion on the index page.

Include indexed sections to identify all operation and maintenance manuals that are not contained within the binder. Provide a copy of the front cover or other identifying feature of the manual within the section with a note stating "this manual has been provided separately".

Provide a title on the binder edge "Operation and maintenance instructions for (project name)". If more than one binder is required identify each binder by number and ranking (e.g. Volume 2 of 3) and group information logically between the binders for ease of reference.

Provide operation and maintenance manuals clearly and neatly marked on the spine or front cover so as to identify the project name. Where operation and maintenance manuals are a collection of loose leaf documentation, provide documentation in a loose-leaf binder as described above.

1.12 FINAL O&M INFORMATION - ELECTRONIC COPY

Provide a copy of all hardcopy information in PDF format arranged in logical named folders. In addition provide DWG files of documentation if available.

1.13 REVIEW OF FINAL DOCUMENTATION

The contract administrator may review the final documentation and require alteration and resubmission.

2 SELECTIONS

O&M Documentation

2.1 FINAL DOCUMENTATION - INFORMATION FOR OPERATION AND MAINTENANCE

Provide a complete electronic copy to the contract administrator.

Provide two hardcopy sets of completed O&M documentation to the contract administrator. At least one set is to contain all available original documentation. The contractor is to retain a third hardcopy set for their records.

Provide any documentation (including required original documentation) as required to the relevant territorial authority.

2.2 FINAL DOCUMENTATION - OPERATION AND MAINTENANCE MANUALS

Provide a complete electronic copy to the contract administrator.

Provide two hardcopy sets of completed maintenance manuals to the contract administrator. At least one set is to contain all available original documentation. The contractor is to retain a third hardcopy set for their records.

Provide any documentation (including required original documentation) as required to the relevant territorial authority.

Maintenance contract proposals

2.3 MAINTENANCE CONTRACT PROPOSALS

Unless otherwise specified in a work section, provide maintenance contract proposals to the contract administrator no later than the date of Practical Completion. Provide in electronic and hardcopy form.

1270 CONSTRUCTION

1 GENERAL

This GENERAL section relates to common requirements for construction issues including:

- Quality control and assurance
- Noise and nuisance
- Set-out and tolerances
- Common execution requirements
- Qualifications
- Common product requirements
- Common requirements for samples and prototypes
- Common requirements for spare and maintenance products
- Cleaning during the works
- Removal of protection
- Completion requirements
- Commissioning
- Practical completion submission
- Defects period submissions
- Completion submissions

1.1 SCHEDULE SECTION

Refer to 1270S1 SCHEDULE OF SAMPLES & PROTOTYPES for work sections contained in this specification that have requirements for samples and prototypes.

Refer to 1270S2 SCHEDULE OF SPARES & MAINTENANCE PRODUCTS for work sections contained in this specification that have requirements for spares and maintenance products.

Quality control and assurance

1.2 QUALITY ASSURANCE

Carry out and record regular checks of material quality and accuracy, including:

- Concrete quality and finish.
- Dimensional accuracy of structural column locations (following completion of foundations).
- All perimeter columns and frames for plumb.
- Levels of all floors relative to the site datum.
- Framing timber moisture content.

Where any material, quality or dimension falls outside specified or required tolerances, obtain written direction from the contract administrator. Where building consent approval is affected, confirm remedial action with the Building Consent Authority.

Provide all materials, plant, attendances, supervision, inspections and programming to ensure the required quality standards are met by all project personnel.

1.3 NOTICE

Give notice to the contract administrator and any other nominated person of hold points and notification points. Refer to work sections and 1260 PROJECT MANAGEMENT for hold points and notification points required.

1.4 NOTIFIABLE WORK

Lodge notice of the intention to commence any notifiable work and any work that will at any time include any notifiable work, in accordance with Health and Safety in Employment Regulations 1995.

Noise and nuisance

1.5 LIMIT CONSTRUCTION NOISE

Minimise the effects of noise generation by including in the planning of the work such factors as placing of plant, programming the sequence of operations and other management functions. Limit construction noise to comply with the requirements of NZS 6803, the requirements of the Resource Management Act sections 326, 327 and 328 and the Health and Safety in Employment Regulations 1995 clause 11.

1.6 ACCEPTABLE NOISE LEVELS

Refer to NZS 6803 Tables 2 and 3 for the upper limits of construction work noise received in residential zones, dwellings in rural areas, industrial areas and commercial areas, note also the allowed adjustments. Do not exceed these limits or any limits imposed by regional councils or territorial authorities.

1.7 PROVIDE INFORMATION TO NEIGHBOURS

Provide information to neighbours of any noise generation from the site liable to constitute a problem. Explain to them the means being used to minimise excessive noise and establish with them the timings most suitable for the noise generating work to be carried on.

Discuss with any complainant the measures being used to minimise noise. Where possible modify these measures to accommodate particular circumstances. Finally, determine the sound level at the location under discussion using methods and observation reporting as laid down in NZS 6803. If the noise level is above the upper limits of NZS 6803, table 2 and table 3, cease the noise generating operation and remedy the problem.

1.8 ROADWAY AND FOOTPATH

Keep the adjacent footpath and road clear at all times. Where work must be carried out in the roadway or footpath, obtain required consents from the territorial authority. Where temporary use is made of the footpath or roadway for deliveries and the like ensure that public safety is protected and the goods and materials moved as soon as practicable. Sweep, wash and otherwise clean the roadway/footpath and restore it to its previous condition.

1.9 VEHICLE CROSSING

Make good damage that has occurred as a result of carrying out the contract works. Where there has been significant damage, contact the territorial authority and obtain instructions for making good. Pay the territorial authority costs associated with making good.

1.10 DIRT AND DROPPINGS

Remove dirt and droppings deposited on public or private thoroughfares from vehicles servicing the site to the satisfaction of the appropriate authorities and the contract administrator.

1.11 DAMAGE AND NUISANCE

Take precautions to prevent damage and nuisance from water, fire, smoke, dust, rubbish and all other causes resulting from the construction works.

1.12 SMOKE FREE REQUIREMENTS

In accordance with the Smoke Free Environments Act 1990 smoking is not allowed on site.

1.13 RESTRICTIONS

Do not:

- light rubbish fires on the site.
- bring dogs on to or near the site.
- bring radios/audio players on to the site.

Set-out and tolerances

1.14 SURVEY INFORMATION

Locate and verify survey marks and datum points required to set out the works. Where these do not exist or cannot be located advise the contract administrator who will arrange for the required points to be established.

Record and maintain their position. Re-establish and replace disturbed or obliterated marks.

1.15 DATUM

Establish a permanent site datum to confirm the proposed levels and their relationship to all other existing and new levels.

1.16 SET-OUT

Set out the work to conform with the drawings.

1.17 USE OF SET-OUT INSTRUMENTS

Permit without charge, the use of instruments already on site for checking, setting out and levels.

1.18 CHECK DIMENSIONS

Check all dimensions both on drawings and site, particularly the correlation between components and work in place. Take all dimensions on drawings to be between structural elements before linings or finishes, unless clearly stated otherwise.

1.19 TOLERANCES

All work to be level, plumb, and true to line and face. Unless otherwise specified in specific work sections of this specification, tolerances for structural work shall comply with the following:

Concrete construction:	To NZS 3109 Concrete construction Clause 3.9 Tolerances for reinforcement Table 5.1 Tolerance for precast components Table 5.2 Tolerance for in situ construction To NZS 3114 Concrete surface finishes
Masonry construction:	To NZS 4210 Masonry construction: Materials and workmanship Clause 2.6.5 Tolerances Table 2.2 Maximum tolerances
Structural steelwork:	To NZS 3404.1 Steel structures standard Section 14.4 Tolerances (after fabrication) Section 15.3 Tolerances (erection)
Timber framing:	To NZS 3604 Timber-framed buildings Clause 2.2 Tolerances Table 2.1 Timber framing tolerances

Refer to work sections for tolerance requirements for finishes.

Execution

1.20 EXAMINE PREVIOUS WORK

Before commencing any part of the work carefully examine the previous work on which it depends, to ensure it is of the required standard.

1.21 REPORT DEFECTIVE PREVIOUS WORK

Refer defects to the contractor to be remedied, if the remedy is outside the scope of the contract documents the contractor shall obtain direction from the contract administrator. Do not carry out work over previous work that is defective and will affect the required standard.

1.22 EXECUTION GENERALLY

Construct the work in accordance with the documents issued for construction including any direction that may have been given by the contract administrator that varies the construction document.

1.23 EXECUTION - NO DETAIL IS PROVIDED

The documents issued for construction will not include all details relating to every material, junction and interface with other materials.

Where the detail provided is of a general nature, or where no detail is provided, refer to the manufacturer's documents for information relating to installation and execution of that part of the work.

Where there is more than one method or detail appropriate to the part of the work in question, refer the options to the Contract Administrator for direction as to which detail or method to use.

1.24 EXECUTION - ACCEPTABLE SOLUTION IS REFERRED TO

Where a NZBC Acceptable Solution is referred to in the specification but not shown on the plans, obtain a copy of that Acceptable Solution and make it available to the workers carrying out that part of the work.

1.25 MINIMISE DELAYS DUE TO WEATHER

Use appropriate techniques and methods to prevent damage and minimise delays due to weather.

Defective or damaged work

1.26 DEFECTIVE OR DAMAGED WORK

Repair defective, damaged and marked elements, or replace them where repair is not possible or will not be acceptable. Adjust operation of equipment and moving parts not working correctly. Refer to individual work sections for any special requirements.

Qualifications

1.27 QUALIFICATIONS GENERALLY

The work is to be carried out by workers and / or supervisors who are experienced, competent and familiar with the materials and the techniques specified. Workers must also be familiar with the manufacturers' and suppliers' installation and application instructions and standard details provided by them in relation to the use of the products for this project. If requested provide evidence of qualification / experience.

1.28 QUALIFICATIONS WORKERS – RESTRICTED BUILDING WORK

Where restricted building work (RBW) forms part of the contract works, workers, or supervisors of that work must be licensed building practitioners (LBP) holding current licenses for the particular restricted building work.
For rare instances where non-RBW also requires an LBP refer to individual work sections for details.

1.29 QUALIFICATIONS WORKERS – MANUFACTURER / SUPPLIER REQUIREMENTS

Where required by a manufacturer or supplier, workers must be specifically trained /approved / accredited / registered / licensed / certified by them. Refer to individual work sections for details.

1.30 QUALIFICATIONS WORKERS – LICENSED UNDER STATUTE

Where workers and / or supervisors of work are required to be licensed, registered or similar under legislation, they must have a current license before they start the work and maintain currency until their part of the work has been completed and all documentation that is required has been provided.

1.31 QUALIFICATIONS WORKERS – INDUSTRY QUALIFICATION REQUIREMENTS

Where workers and / or supervisors of work are required to be trained / licensed / certified or similar under industry rules or contractual requirements, they must have a current qualification before they start the work and maintain currency until their part of the work has been completed. Refer to individual work sections for details.

1.32 QUALIFICATIONS – PRODUCER STATEMENTS

Where producer statements are required for parts of the work, ensure that person is suitably qualified and authorized to issue such producer statements.

1.33 REPLACEMENT OF PERSON

Should it be necessary to replace a person, ensure that records of work, producer statements, warranties and the like required for the part of the work they have carried out are obtained.

Ensure that the replacement person takes responsibility for the work they carry out and that they are able to provide such records of work, producer statements, warranties and the like required as a condition of the contract and the building consent.

Products

1.34 NEW PRODUCTS

Products to be new unless stated otherwise, of the specified standard, and complying with all cited documents.

1.35 COMPATIBILITY OF PRODUCTS

Ensure all parts of a construction or finish are compatible and their individual use approved by the manufacturers and suppliers of other parts of the system. Source all parts of a system from a single manufacturer or supplier.

1.36 DELIVERY, STORAGE & HANDLING OF PRODUCTS

Protect products during transit and delivery on site and / or off site. Reject and replace goods that are defective or damaged or will not provide the required finish.

Handle products carefully to avoid damage and distortion and in accordance with codes of practice and the manufacturer's or supplier's requirements. Avoid any contact with potentially damaging surfaces or conditions.

Store products to avoid visual damage, environmental damage, mechanical damage and distortion. Store in accordance with codes of practice and the product manufacturer's or supplier's requirements. Maintain the proper condition of any protective packaging, wrapping and support.

Refer to individual work sections for any special requirements.

1.37 SUBSTRATE CONDITIONS

Ensure substrate conditions are within the manufacturer's or supplier's stated guidelines both before and during the installation of any material, product or system. Obtain written instructions on the necessary action to rectify unsatisfactory conditions.

1.38 INSTALLING PRODUCTS

Install in accordance with the manufacturer's or supplier's technical literature. Ensure that all installers are familiar with the required substrate conditions and the manufacturer's or supplier's specified preparation, fixing and finishing techniques.

1.39 COMPLY WITH STANDARDS

Comply with the relevant and/or cited Standard for any material or component. Obtain certificates of compliance when requested by the contract administrator.

1.40 CONDITION OF PRODUCTS

To be in perfect condition when incorporated into the work.

1.41 INCOMPATIBLE PRODUCTS

Separate incompatible materials and metals with separation layers, sleeves or gaskets of plastic film, bituminous felt or mastic or paint coatings, installed so that none are visible on exposed surfaces.

Samples

1.42 SAMPLES FOR REVIEW

Where specified in the work sections submit samples and any nominated supporting documentation to the named reviewer and notify the contract administrator of the submission. Where no person is named as the reviewer, submit to the contract administrator.

Samples for review may be described as a portable sample for review, portable control sample, fixed sample for review or fixed control sample. A portable sample refers to a sample that is easily movable, convenient for carrying. A fixed sample refers to a sample that is not portable. If the location of a fixed sample is not defined in the work section, obtain direction from the contract administrator.

For samples that are located on site, or by agreement with the contract administrator are located off site, notify the reviewer and contract administrator of their location and availability for review.

Timing for the provision and review of samples is to be included in the contract programme. Where no time is stated in a work section allow 10 working days for each review. Allow for such resubmission and further review as may be required. No extension of time will be allowed for resubmission and further review.

Obtain written instructions in relation to the samples from the contract administrator. Do not proceed further with related work items until advised to continue.

Samples may be incorporated in the finished work if confirmed in writing by the contract administrator, otherwise allow to completely remove any fixed samples. Remove from the site any rejected samples.

Refer to SAMPLES clauses in work sections for further detail.

1.43 CONTROL SAMPLES

Samples become control samples if an instruction is given by the contract administrator to that effect. Control samples will be used for comparison purposes throughout the contract. Control samples may be portable or fixed in place, refer to SAMPLES clauses in work sections for further detail.

Control samples that are to remain on site, or otherwise in the care of the contractor, are to be maintained in original condition.

If confirmed by the contract administrator, fixed control samples may be incorporated in the finished work, otherwise allow to remove fixed control samples from site when instructed by the contract administrator.

1.44 OTHER SAMPLE REQUIREMENTS

Where specified in the work sections obtain samples for the purposes described.

Prototypes

1.45 PROTOTYPES - TESTING

Where specified in the work sections provide and test prototypes. Timing for the provision, testing, disassembling, re-assembling, retesting and review of prototypes and test results is to be included in the contract programme. Where no time is stated in a work section allow 10 working days for each review of test results. Submit test results to the named reviewer and to the contract administrator. Where no person is named as the reviewer submit test results to the contract administrator.

Obtain written instructions in relation to the prototype from the contract administrator. Do not proceed further with related work items until advised to continue.

Refer to PROTOTYPES - TESTING clauses in work sections for further detail.

1.46 PROTOTYPES - REVIEW

Where specified in the work sections provide prototypes for review. Timing for the provision, disassembling, re-assembling and review of prototypes is to be included in the contract programme. Where no time is stated in a work section allow 10 working days for review by the named reviewer. Where no person is named as the reviewer notify the contract administrator for direction.

Obtain written instructions in relation to the prototype from the contract administrator. Do not proceed further with related work items until advised to continue.

Refer to PROTOTYPES - REVIEW clauses in work sections for further detail.

1.47 PROTOTYPES - GENERAL

Refer to the PROTOTYPES - TESTING and PROTOTYPES - REVIEW clauses in work section for details on what is to happen after the review and or testing of the prototype is complete. Where no information is provided refer to the contract administrator for direction.

Prototypes may become control samples if an instruction is given by the contract administrator to that effect.

Spares & maintenance products

1.48 SPARES & MAINTENANCE PRODUCTS

Collect, protect, package, label and store safely all spares and maintenance products specified in the work sections. Give the contract administrator an inventory of all spares and maintenance products.

If no instruction is given within a work section for the location of spares and maintenance products, then deliver to the owner .

If no instruction is given within a work section for timing in relation to the provision of spares and maintenance products, then provide at practical completion.

Refer to SPARES & MAINTENANCE PRODUCTS clauses in work sections for further detail.

Cleaning during the works

1.49 PERIODIC SITE CLEANING

Carry out periodic site cleaning during the contract period. Place waste material in appropriate storage pending removal from the site. Keep food waste separate from construction waste.

1.50 TRADE CLEANING

Keep the work area clean, remove of all debris, unused and temporary materials and elements from the site as work progresses and on completion. Refer to individual work sections for any specific requirements.

Remove protection

1.51 REMOVE PROTECTION

Remove all temporary markings, labels, packaging and coverings to products unless instructed otherwise, or where they are required for protection.

Maintain temporary protection until removal is required by the manufacturer/supplier, the execution of the work or the requirements of individual work sections. Re-establish protection as necessary.

Remove temporary protection and special protection immediately prior to practical completion or before when there is no further risk of damage.

Refer to individual work sections for any special removal requirements.

Completion

1.52 SPECIAL REQUIREMENTS

Refer to individual work sections for any special completion requirements.

1.53 LEAVE WORK

Leave work to the standard required for the following procedures.

1.54 COMPLETION - TESTS & CERTIFICATION

Carry out tests as detailed in the work sections. If testing identifies a failure to meet performance requirements, notify the contract administrator and any nominated recipient, identify and correct the cause of failure and repeat the test. Submit test results and certification documentation to the contract administrator and any nominated recipient.

1.55 REMOVE CONSTRUCTION WASTE

Remove all debris, unused materials and the like from the site. Arrange for material to be recycled to be collected or delivered to the recycler.

1.56 COMPLETE ALL SERVICES

Ensure all services are complete and operational, with all temporary labelling removed, required labelling fixed and service instructions provided.

1.57 CLEANING BY CONTRACTOR

Clear the contract works of all construction materials, waste, dirt and debris. Clean the contract works including:

- Wipe all surfaces to remove construction dust.
- Clean out service ducts and accessible concealed spaces.
- Clean out all gutters and rainwater heads.
- Wipe dust from both sides of glass. Take particular care when removing paint or cementitious materials to not damage the glass. Do not use metal scrappers that may damage the glass.
- Remove adhesive residue left by labels and other temporary protection/markings.
- Clean out the interior of all cabinetry.
- Wash down external concrete including driveways and concrete masonry. Take care when waterblasting to not cause damage to the surface or allow water to enter the building.
- Remove rubbish and building material from the area immediately adjacent to the contract works.

1.58 CLEANING BY COMMERCIAL CLEANER

In addition to cleaning carried out by the contractor, use a commercial cleaning company to clean the whole of the interior of the building, including all appliances, equipment, fittings, surfaces and finishes to leave it without any blemish. Cleaning to include:

- Clean and wash down all external surfaces to remove dirt, debris and marking.
- Clean all interior surfaces including cabinetwork, joinery, sanitary and hardware items.
- Clean all floor finishes.
- Clean and polish all glass, both sides. Take particular care when removing paint or cementitious materials to not damage the glass. Do not use metal scrappers that may damage the glass.

Commissioning

1.59 SPECIAL REQUIREMENTS

Refer to individual work sections for any special commissioning requirements.

1.60 MOVING PARTS

Adjust, ease and lubricate all doors, windows, drawers, hardware, appliances, controls and all moving parts to give easy and efficient operation.

1.61 COMMISSIONING - TESTS & CERTIFICATION

Carry out tests as detailed in the work sections. If testing identifies a failure to meet performance requirements, notify the contract administrator and any nominated recipient, identify and correct the cause of failure and repeat the test. Submit test results and certification documentation to the contract administrator and any nominated recipient.

1.62 INSTRUCTION AND DEMONSTRATION

Provide instruction and demonstration to the owner/occupier to the extent that is listed below and as required for them to reasonably occupy and use the building. This is to include at least the following:

- Location and isolation of all services connections.
- Operation of all emergency systems.
- Locking and security arrangements.
- Operation of basic building services including lighting, heating, mechanical ventilation, air conditioning and security.
- Special cleaning requirements and procedures.
- Any other features that the owner/occupier needs to know about.

1.63 SECURITY AT COMPLETION

Remove any temporary lock cylinders and complete final keying prior to handing over keys to the principal on completion of the works. Leave the works secure with all accesses locked. Account for all keys/cards/codes and hand to the principal along with an itemised schedule, retaining a duplicate schedule signed by the principal as a receipt.

Practical completion submission

1.64 ADDITIONAL PRACTICAL COMPLETION INFORMATION

In addition to requirements in the contract and contained elsewhere in the specification provide the following information submissions for practical completion:

- All documents which the contractor has obtained on behalf of the owner/occupier.
- Information required by the owner/occupier to be able to use the building.
- Advice that NUO accounts in the contractor’s name have been closed and as appropriate changed to be in the name of the owner/occupier.
- A list of persons to be contacted to carry out any emergency or remedial work including 24 hour/7 day contact details.

1.65 ADDITIONAL PRACTICAL COMPLETION REQUIREMENTS

Refer to the conditions of contract for the definition of practical completion and the conditions relating to practical completion.

Defects period submissions

1.66 DEFECTS REMEDIATION - SUBMISSIONS

Provide the following at periods required by the contract administrator, where no period is stated, provide this information monthly:

- A copy of the contractor's check list identifying remaining defects and omissions to be completed recording progress made in completing and correcting the items.
- A copy of lists issued by the principal/employer identifying omissions and defects recording progress made in completing and correcting the items.
- A copy of lists issued by the contract administrator identifying omissions and minor defects recording progress made in completing and correcting the items.

Completion submissions

1.67 FINAL COMPLETION - SUBMISSIONS

In addition to requirements in the contract and contained elsewhere in the specification provide:

- Contractors advice that all defects have been corrected and omissions and deferred work completed.
- All documents which the contractor has obtained on behalf of the owner/occupier.

2210 PREPARATION & GROUNDWORK

1 GENERAL

This section relates to the clearance, excavation and backfilling of the site area in preparation for:

- footings and floor slabs
- backfilling behind basement retaining walls

Documents

1.1 DOCUMENTS

Refer to the general section 1233 REFERENCED DOCUMENTS. The following documents are specifically referred to in this section:

NZS 3604	Timber-framed buildings
WorkSafe	Good Practice Guidelines - Excavation Safety

1.2 SPECIFIER DOCUMENTS

Specifier's documents relating to this part of the work:
Wiley Geotechnical Report

Specifier's contact details;

Company:	Wiley Geotechnical
Web:	https://www.wileygeotechnical.co.nz
Telephone:	09-431 5353

1.3 SITE SAFETY

Provide adequate support for all excavations. Cover holes and fence off open trenches and banks.

1.4 ARCHAEOLOGICAL DISCOVERY

If fossils, antiquities and other items of value are found refer to the general section 1220 PROJECT for actions to be taken with archaeological discovery.

2 PRODUCTS

2.1 EXCAVATED CLEAN FILL

Clean, free of contamination, mineral soil from other formations in the excavation which may be selected and approved as suitable for filling by having grading and moisture content properties that will allow recompaction to 95% of maximum density.

2.2 VOLCANIC TUFF FILL

Scoriaceous tuff of variable grading excluding excessive silt or clay material, capable of being placed and compacted as specified.

2.3 ROCK FILL

Hard material comprising rock, broken stone, hard brick, concrete, run of pit scoria, or other comparable inert material capable of being placed and compacted as specified.

2.4 SAND FILL

Clean sand of such grading in particle size to achieve mechanical compaction to 90% maximum density.

2.5 HARD FILL

Scoria or crushed rock to GAP (General All Passing) 40 grading.

2.6 GRANULAR FILL

Approved screened crushed gravel or scoria, graded in size from 20mm to 7mm, clean. When tested with a standard sieve of 4.75 opening no material is to pass.

2.7 DRESSING COURSE

Scoria to GAP 20 grading, or "dirty footpath scoria", or equivalent "all in" graded crushed metal aggregate.

2.8 FREE-DRAINING AGGREGATE

Scoria or crushed gravel graded 50 to 14 clean.

3 EXECUTION

3.1 WASHOUT BAY FOR TRUCK

Provide a designated area for trucks to be washed down to avoid mud and dirt being carried off site.

3.2 EXCAVATION GENERALLY

Carry out excavation, using plant suitable for the purpose, to the guidelines set by the WorkSafe, Good Practice Guidelines - Excavation Safety.

3.3 BURNING OF MATERIALS

Burning of materials is not permitted on site.

3.4 PROTECT EXISTING WORK

Protect from damage existing buildings, structures, roads, paving and services nominated on the drawings as being retained.

3.5 EROSION CONTROL

Ensure measures are in place to contain silt dislodged as a result of water infiltration and to prevent it being carried off site with stormwater.

3.6 SURFACE PREPARATION

Comply with NZS 3604, section 3.5, **Site preparation**. Remove all turf, vegetation, trees, topsoil, stumps, uncontrolled fill and rubbish from the area to be built on.

3.7 STOCKPILE TOPSOIL

Stockpile excavated topsoil on site where directed. Keep separate from other excavated materials. Spread and level where directed before completion of the works.

3.8 GENERAL EXCAVATION

Trim ground to required profiles, batters, falls and levels. Remove loose material. Protect cut faces from collapse. Keep excavations free from water.

3.9 ROCK EXCAVATION

If rock is found at any level above the underside of the structural foundations, or above required base levels for site service trenches, immediately notify the owner. Obtain written instructions from the owner on the proposed approach to rock excavation, or consequent alterations to subgrade construction. Confirm any changes with the territorial authority.

3.10 FOUNDATION EXCAVATION

Take foundation excavations to depths shown. Keep trenches plumb and straight, bottoms level and free of soft spots, stepped as detailed and clean and free of water.

3.11 INADEQUATE BEARING

If localised bearing is not to NZS 3604, 3.1.2 **Foundations** and 3.1.3 **Determination of good ground**, then excavate further and backfill with material as follows:

- Below slabs on grade: Hardfill compacted in 150mm layers
- Below footings: 10 MPa concrete

If excavation exceeds the required depths, backfill and compact to the correct level with material as listed.
Confirm any changes with the territorial authority.
For inadequate bearing or over excavation of service trenches, use hardfill compacted in 150mm layers.

3.12 STANDARD OF COMPACTION

Place fill in layers of not more than 150mm and compact to achieve 95% of maximum dry density. For granular fill material, the fill shall be compacted to 80% of saturated dry density.

3.13 GRANULAR BASE FOR SLABS

To conform to NZS 3604, section 7.5.3, **Granular base**. Consolidate with a vibrating roller. Blind the surface with 20mm of coarse sand or sand/cement and roll ready to receive a damp-proof membrane.

3.14 GENERAL BACKFILLING

Obtain written confirmation from the owner before using any excavated material. Compact approved backfilling in 150mm layers with the last 200mm in clean topsoil, lightly compacted and neatly finished off.

3.15 SURPLUS MATERIAL

Remove surplus and excavated material from the site.

3155FR FIRTH RIBRAFT® FLOOR SYSTEMS

1 GENERAL

This section relates to the supply and installation of **Firth Industries** RibRaft® floor system and RibRaft® X-Pod® floor system.
It includes:

- a nonspecific design reinforced concrete waffle raft floor slab-on-ground (RibRaft®) system.
- a specific design reinforced concrete waffle raft floor slab-on-ground RibRaft® X-Pod® floor system.
- a RibRaft® floor system incorporating an integrated thermal edging, HotEdge®.

1.1 ABBREVIATIONS AND DEFINITIONS

Refer to the general section 1232 INTERPRETATION & DEFINITIONS for abbreviations and definitions used throughout the specification.

The following definitions apply specifically to this section:

ACRS	Australian Certification Authority for Reinforcing Steels - An independent certification scheme for reinforcing steel and structural steel, by product and manufacturer/processor. Certifies compliance with Australia/New Zealand Standards. ACRS Web site - www.steelcertification.com

Documents

1.2 DOCUMENTS

Refer to the general section 1233 REFERENCED DOCUMENTS. The following documents are specifically referred to in this section:

NZBC B1/VM1	Structure
NZBC B1/AS1	Structure
NZBC G13/AS1	Foul Water
NZS 3104	Specification for concrete production
NZS 3109	Concrete construction
NZS 3114	Specification for concrete surface finishes
NZS 3604	Timber-framed buildings
NZS 3631	NZ Timber grading rules
NZS 4229	Concrete masonry buildings not requiring specific engineering design
AS/NZS 4671	Steel reinforcing materials

Documents listed above and cited in the clauses that follow are part of this specification. However, this specification takes precedence in the event of it being at variance with the cited document.

1.3 MANUFACTURER/SUPPLIER DOCUMENTS

Manufacturer and supplier documents relating to this part of the work:
Firth RibRaft® Floor System Manual **
Firth RibRaft® Technical Manual January 2020
Firth RibRaft® Flooring Solutions (Introductory brochure)
Firth RibRaft® HotEdge® installation manual
Firth RibRaft® X-Pod® Brochure (Introductory brochure)
Firth RibRaft® X-Pod® Structural Design Guide
CodeMark™Bureau Veritas CM70056 - RibRaft® Floor System

** A copy of this manual must be held on site.

Manufacturer/supplier contact details

Company:	**Firth Industries**
Web:	www.firth.co.nz
Email:	info@firth.co.nz
Telephone:	0800 FIRTH1 (0800 347841)

Further information and/or names of tradespeople who have installed Firth RibRaft® floors are available by phoning Firth Information Service 0800 347841.

Requirements

1.4 NO SUBSTITUTIONS

Substitutions are not permitted to any specified Firth RibRaft® Floor System and Firth RibRaft® X-Pod® Floor System product or component, or associated Firth products.
Concrete used for the construction of Firth RibRaft® Floor System and Firth RibRaft® X-Pod® Floor Systems must be supplied by Firth. RibRaft® & RibRaft® X-Pod® formers are only available from Firth Industries and are only supplied on a project with confirmation of an order for Firth Concrete.

1.5 QUALIFICATIONS

Tradespeople to be competent, experienced, and familiar with the Firth RibRaft® Floor System and Firth RibRaft® X-Pod® Floor System materials and techniques specified.

1.6 STEEL REINFORCING COMPLIANCE

Steel reinforcing materials for concrete to AS/NZS 4671. Steel to be manufactured in New Zealand, or by an overseas manufacturer holding a current valid (or equivalent) NZ S Mark or ACRS certificate for that type of steel. Confirm compliance and provide evidence if requested.

1.7 QUALITY RECORDS

Keep accurate records relating to strength and quality of materials used during construction. Include records of workmanship during construction and photographs of as-built details. Make the information available to the Building Consent Authority inspector on request.

Performance

1.8 COMPLIANCE - RIBRAFT® FLOOR SYSTEM

RibRaft® Floor System meets the requirements of the CodeMark® certificate CodeMark™Bureau Veritas CM70056 when used within the conditions and limitations of its Certificate of Conformity.
Achieves compliance with NZBC as follows:

- NZBC B1.3.1, 3.2, 3.3, B1.3.1, B1.3.3 (a,b,f,g,h,q,m), B1.3.4
- NZBC B2.3.1 (a), B2.3.1(a), B2.3.2(a)
- NZBC E2.3.3
- NZBC F2.3.1
- NZBC H1. 3.1 (refer to limitation c)

2 PRODUCTS

Materials

2.1 BLINDING

50mm maximum compacted GAP 7.

2.2 TIMBER FORMWORK

No. 2 framing and dressing or merchantable grade radiata pine boards to NZS 3631.

2.3 DAMP-PROOF MEMBRANE

0.25mm minimum polyethylene to NZS 3604: clause 7.5.4, Damp-proof membrane (DPM). Refer to SELECTIONS.

2.4 NORMAL CONCRETE - NON RIBRAFT® APPLICATIONS

Normal concrete 20 MPa grade, maximum aggregate size 19mm to NZS 3104 for concrete work where Firth Raftmix™ or Firth Raftmix™ Pump are not appropriate

2.5 REINFORCEMENT

Bars to AS/NZS 4671. Grade 500E deformed, other than for ties, stirrups, and spirals, unless shown otherwise on the drawings.

2.6 TYING WIRE

Mild drawn steel wire not less than 1.2mm diameter.

Materials – RibRaft® Floor System

2.7 POLYSTYRENE PODS FORMERS– RIBRAFT® FLOOR SYSTEM

Firth RibRaft® proprietary purpose made polystyrene pods.

2.8 INTERNAL CORNER REINFORCEMENT – RIBRAFT® FLOOR SYSTEM

Minimum 2 x HD12 bars Grade 500E to AS/NZS 4671.

2.9 MESH – RIBRAFT® FLOOR SYSTEM

Welded reinforcing mesh to AS/NZS 4671 as modified by NZS B1/VM1, generally, Class E, minimum to NZBC B1/AS1 - Grade 500E, 2.27kg/m2 (1.14kg/m2 in each direction). Minimum SE62 500E mesh or the equivalent.

2.10 CONCRETE 25MPa - RIBRAFT® FLOOR SYSTEM

Firth Raftmix25, a 25 MPa 100mm slump mix in either 13mm or 19mm nominal aggregate size, supplied by Firth Industries. Firth Raftmix™ for direct placement and Firth Raftmix™ Pump for pump applications.

2.11 SPACERS

Firth proprietary spacers. Refer to SELECTIONS for size.

Components

2.12 INTEGRATED THERMAL EDGING PANELS

Firth RibRaft® HotEdge® panels, 25mm thick x 3m long pre-plastered Foamular® extruded foam sheets with ship-lapped joints at each end. Panels provide a minimum of R1.0 insulation to edge beam of RibRaft® floors. Panels are placed inside RibRaft® foundation boxing before Firth RaftMix™ concrete is poured, to form an integral part of the foundation.

RibRaft® HotEdge® components to complete the system are as follows:

- 60mm Tornado galvanized wire screws (steel mechanical connectors, to provide regular fixed anchor points into the edge beam)
- 45mm heavy duty powder coated external corner aluminium extrusion (length to suit the application)
- DanDam Foam Tape.

Refer to SELECTIONS for options.

3 EXECUTION

Conditions

3.1 DELIVERY, STORAGE & HANDLING OF PRODUCTS

Refer to 1270 CONSTRUCTION for requirements relating to delivery, storage, and handling of products.

3.2 ROUTINE MATTERS

Refer to 1250 TEMPORARY WORKS & SERVICES for protection requirements.
Refer to 1270 CONSTRUCTION for requirements relating to defective or damaged work, removal of protection and cleaning.

Application -General

3.3 SITE CLEARANCE

Clear the slab area of any vegetation and topsoil down to the subgrade level.

3.4 BUILDING PLATFORM

Create a building platform to a level surface to the required depth below finished floor level to suit the RibRaft® or RibRaft® Xpod system. Cut and/or fill sloping sites. Confirm finished floor level.

3.5 POST-CUT INSPECTION – RIBRAFT® FLOOR SYSTEM

Inspect and confirm that the soil conditions are as anticipated by the geotechnical investigation and report and conform to the requirements of the Firth RibRaft® manual. Refer to Firth RibRaft® Floor System Manual Section 1 - Design Information, 3.5 Foundation Soils.

3.6 TEMPORARY BUILDING PLATFORM DRAINAGE

Construct suitable drainage to keep excessive ground water off the building platform during and after construction as required.

3.7 HARDFILL

Place hardfill and ensure it is spread and compacted with mechanical compaction.

3.8 BLINDING LAYER

Spread GAP 7 blinding layer to a minimum 500mm past the outside edge of the slab, compact to a level layer no greater than 50mm thick and no higher than 305mm below finished floor level.

3.9 FORMWORK

Construct formwork as required, well braced, and tied to remain in position, straight and plumb during construction. Ensure formwork will provide for the topping depth, including rebates and the required concrete finish.

3.10 INSTALL DAMP-PROOF MEMBRANE

Apply DPM to the prepared basecourse extending to the outside of all edge beams or fold and staple up the inside of the formwork. Overlap all joints in the DPM sheets a minimum 150mm. Tape laps and penetrations with 50mm wide pressure sensitive plastic tape. Ensure DPM is not damaged during the construction process. Repair all damage to DPM before proceeding with following procedures.

Application - RibRaft® floor system

3.11 PIPED SERVICES – BELOW SLAB INSTALLATION

Ensure piped and cabled underfloor services are installed in the subsoil or hardfill in locations as shown on the drawings and according to Firth RibRaft® floor system requirements. Refer to Firth RibRaft® Floor System Manual Section 2 - Installation Information, 3.4 Plumbing and Services.

3.12 PLACE POLYSTYRENE PODS

Place polystyrene pods in a regular waffle pattern using the spacers in the specified grid pattern to fit the floor plan. Cut pods on site with a saw or suitable hot wire as required. Cut holes for services and trim around piles as required on site.

3.13 INSTALL SPACERS

Install spacers and locations to the Firth RibRaft® floor system requirements.

Form standard ribs between pods using Firth 100mm spacers. Place the spacers at a minimum of one spacer along each edge of each pod or part pod. The ribs in both directions form a waffle pattern throughout the slab.

Form the edge beam using Firth 300mm spacers. Place the spacers at 1200mm centres maximum along the perimeter of the slab at least and one spacer per pod or part pod.

Form ribs to support loadbearing walls using Firth 300mm spacers. Place the spacers at a minimum of one spacer along the edge of each pod or part pod.

3.14 PLACE REINFORCING STEEL: RIB STEEL

Place rib reinforcing steel in the bottom of the internal ribs and supported in the correct position by the Firth spacers. Lap all steel 720mm minimum and hook all plain bars. At the junction with the edge beam, each rib steel bar shall sit on top of the edge beam bars and extend to the outermost bar. Allow for 75mm cover to the edge of the beam. Place 1 x HD12 bar in each 100mm wide rib and 2 x HD12 bars in each 300mm wide rib.

3.15 PLACE REINFORCING STEEL: EDGE BEAM STEEL

Place the two edge beam reinforcing bars in the bottom of the edge beam and supported in the correct position by the Firth spacers. Tie one edge beam bar below the mesh at the perimeter of the area covered by the polystyrene pods. Lap all steel 720mm minimum and hook all plain bars. At corners, the inner bottom bars and the top bars cross each other and extend to 75mm from the outside face of the edge beam. Tie these bars together where they cross. Tying of edge beam steel is only required at corners.

3.16 PLACE REINFORCING STEEL: RE-ENTRANT CORNER STEEL

Place two HD12 bars, 1200mm in length across the corner. Tie to the top of the mesh at re-entrant corners at 200mm centers with 50mm side cover from the internal corner.

Install specified steel to Firth RibRaft® Floor System Manual Section 2 - Installation Information, 3.9 Reinforcing Steel. Ensure specified minimum cover requirements are maintained.

3.17 PLACE REINFORCING MESH AND CHAIRS

Place reinforcing mesh over the pods and support on the mesh chairs spaced at 1200mm centerss minimum, with two mesh chairs minimum placed per pod and with one mesh chair minimum per part pod.

3.18 MESH LAPS

For slabs on ground the welded reinforcing mesh to be lapped and tied, such that the outermost wires overlap by the greater of:

- the spacing of the cross wires plus 50mm
- 225mm or
- manufacturer's requirements

Do not count bar extensions beyond the outermost cross wire.

Application - General

3.19 FORM SLAB AND OPENING REBATES

Form rebates, as detailed on drawings.

Form a minimum 50mm rebate in slab for masonry veneer construction with a width dependent on the veneer width, cavity width and overhang. Waterproof the rebate with a bituminous sealer on both the vertical and horizontal faces.

3.20 TOPPING SLAB DEPTH

Refer to SELECTIONS for required topping slab depth.

3.21 PRE-PLACEMENT INSPECTION

Arrange for excavations, formwork and reinforcement to be inspected and passed by the Building Consent Authority.

3.22 CONCRETE PLACEMENT AND COMPACTION

Ensure the rib and edge beam canals are clean, free of debris. Pour the floor in a single pour using only Firth Raftmix™, Firth X-Pod® Raftmix™, Firth Raftmix™ Pump or Firth X-Pod® Raftmix Pump concrete and ensuring that the pods remain in position during placing. Pour concrete onto the top of each pod prior to filling the ribs around the pod to help prevent them from floating and lifting.

Use Firth Raftmix™ or Firth X-Pod® Raftmix™ for placement in the floor directly from the concrete truck chute or Firth Raftmix™ Pump or Firth X-Pod® Raftmix™ Pump concrete for placement in the floor by concrete pump.

Compact concrete using a suitable poker vibrator for the ribs and ground beams and into all corners of the formwork. Screed as required. Confirm levels with a laser level.

3.23 CONCRETE FINISHING

Float and trowel to provide a U3 finish to NZS 3114: table 2, Classes of floor, exterior pavement and invert finishes.

3.24 CONCRETE CURING

Curing of the concrete slab must take place immediately after finishing the concrete to NZS 3109 by one of the following curing methods:

- ponding or continuous sprinkling of water
- placing a wet covering or plastic membrane over the slab
- the use of liquid membrane curing compounds

3.25 SHRINKAGE CONTROL JOINTS

Cut shrinkage control joints as shown on the plans after hardening to a depth of 25mm within 24 hours in summer or 48 hours in winter.

Where shrinkage control joints have not been shown on the plans, position the shrinkage control joints to coincide with major changes in the floor plan. Agree position of shrinkage control joints with the designer.

Bay dimensions formed by the shrinkage control joints to be limited to a maximum ratio of length to width of 2 to 1 with a maximum dimension of 6 meters. Place the shrinkage control joints over the 100mm wide internal ribs wherever possible. Where a shrinkage control joint runs along the line of a 300mm wide loadbearing rib, locate the cut directly above one edge of the 300mm rib.

3.26 CLEAN OUT SHRINKAGE CONTROL JOINTS

Clean out control joints. If required fill with suitable flexible sealant.

Finishing

3.27 STRIKE FORMWORK

Strike formwork after at least 12 hours after the slab has been finished without damaging or overloading structure.

3.28 SURFACE DEFECTS

Make good surface defects immediately after forms are stripped. Make good hollows or bony areas with suitable patching mortar, finished to the same tolerances as the parent concrete. Fill any tie rod holes with 1:2 mortar.

Completion

3.29 COMPLETION MATTERS

Refer to 1270 CONSTRUCTION for completion requirements and if required commissioning requirements.

4 SELECTIONS

For further details on selections go to www.firth.co.nz.
Substitutions are not permitted to the following, unless stated otherwise.

Materials - RibRaft® Floor System

4.1 FIRTH RIBRAFT® POD FLOOR SYSTEM

Brand:	Firth Ribraft® Floor System
Size:	1100mm x 1100mm x 220mm
Concrete mix:	Firth Raftmix 25, 25MPa
Topping thickness:	85mm or 95mm where slab is polished - refer to sheet 501.
Mesh:	Class E, Grade 500E, minimum SE62 or equivalent

4.2 FIRTH SPACERS

Brand:	Firth
Size:	100mm and 300mm

3813F FUTUREBUILD® NZ - LVL STRUCTURAL FRAMING

1 GENERAL

This section relates to the supply and installation of Futurebuild LVL engineered wood products including:

- hyONE®
- hySPAN®
- hyCHORD®
- hy90®
- hyJOIST®

1.1 RELATED WORK

Refer to 3811 PREFABRICATED STRUCTURAL TIMBER FRAMING for supply of trusses and frames.

Documents

1.2 DOCUMENTS

Refer to the general section 1233 REFERENCED DOCUMENTS. The following documents are specifically referred to in this section:

NZBC B1	Structure
AS/NZS 2269.0	Plywood - Structural - Specifications
NZS 3604	Timber-framed buildings
AS/NZS 4357.0	Structural laminated veneer lumber - Specifications

Documents listed above and cited in the clauses that follow are part of this specification. However, this specification takes precedence in the event of it being at variance with the cited document.

1.3 MANUFACTURER'S DOCUMENTS

Futurebuild LVL documents relating to work in this section are:

- Futurebuild LVL Residential Design Guide
- Futurebuild LVL Specific Engineering Design Guide
- hyJOIST Design and Installation Guide:2.1
- hyJOIST HJ240 45 and HJ300 45 Brochure
- Product Technical Statement - Futurebuild LVL Products specified for Residential Applications through software and literature
- Product Technical Statement - Futurebuild LVL Products: General/Specific Design
- Product Technical Statement - Futurebuild LVL Products: Specified through designIT for commercial floors
- Product Technical Statement - Futurebuild® LVL Products: Specified through computeIT® Software Solutions
- designIT Software which includes installation details, Design Certificate and Producer Statement

Copies of the above literature and software are available from Futurebuild LVL.

Web:	www.futurebuild.co.nz
Email:	info@futurebuild.co.nz
Telephone:	0800 808 131 (Customer Services), 0800 585 244 (Technical)

Requirements

1.4 NO SUBSTITUTIONS

Substitutions are not permitted to any specified Futurebuild LVL engineered wood products or associated components or accessories. The structural properties of other manufactures LVL products may not be comparable.

1.5 QUALIFICATIONS GENERALLY

Refer to 1270 CONSTRUCTION for requirements relating to qualifications.

1.6 CO-ORDINATION

Refer to all drawings to ensure details and fixings required are provided for in the structural LVL work.

2 PRODUCTS

Materials - Laminated Veneer Lumber (LVL)

2.1 HYSPAN

Structural radiata pine LVL bearers, lintels, rafters, floor joists, floor and roof beams, to AS/NZS 4357.0.

Components

2.2 JOIST HANGERS

Top mount hangers, full depth face mount hangers and partial depth face mount hangers with nails and/or screws to Futurebuild LVL technical literature requirements.

2.3 STEEL STRAPS

Mild steel galvanized straps, to suit tie down applications for rafters, 27mm x 0.6mm, 25mm x 0.8mm and 25mm x 1.0mm.

3 EXECUTION

Conditions

3.1 DELIVERY, STORAGE & HANDLING OF PRODUCTS

Refer to 1270 CONSTRUCTION for requirements relating to delivery, storage and handling of products.

3.2 ERECTION GENERALLY

Carry out the erection of LVL and associated support framing for houses and similar structures to the requirements of NZS 3604 and/or Futurebuild LVL literature and software as detailed. Comply with NZBC B1/VM1, 6.0 Timber. Refer to Futurebuild LVL guidelines for the installation of LVL structural framing. Prop long length beams and lintels at the mid span until the moisture content has reached a suitable level for the application of internal linings.

APPLICATION - HYSPAN

3.3 ERECTION

Lift, place and fix hySPAN without overstressing or deformation. Use temporary supports as needed without causing damage. Fix hySPAN to NZS 3604 and to Futurebuild requirements. Ensure all hySPAN is correctly located, plumb and true to line and face.

Completion & Commissioning

3.4 COMPLETION MATTERS

Refer to 1270 CONSTRUCTION for completion requirements and if required commissioning requirements.

4 SELECTIONS

Substitutions are not permitted to the following, unless stated otherwise.

4.1 HYSPAN® RAFTERS

Location:	As per sheet 504
Type/size:	300x45 hySPAN
Treatment	H1.2

3820 CARPENTRY

1 GENERAL

This section relates to the supply and erection of timber framing, as a framed structure, or as partitioning. It includes prefabricated timber and engineered wood.

1.1 RELATED WORK

Refer to 4161P PAUL INDUSTRIES UNDERLAYS, FOIL AND DPC
Refer to 4161T THERMAKRAFT UNDERLAYS, FOILS & DPC

1.2 DOCUMENTS

Refer to the general section 1233 REFERENCED DOCUMENTS. The following documents are specifically referred to in this section:

NZBC B2/AS1	Durability
AS/NZS 1328.1	Glued laminated structural timber - Performance requirements and minimum production requirements
AS/NZS 1604.4	Specification for preservative treatment - Laminated veneer lumber (LVL)
AS/NZS 1604.5	Specification for preservative treatment - Glue laminated timber products
NZS 3602	Timber and wood-based products for use in building
NZS 3603	Timber structures standard
NZS 3604	Timber-framed buildings
NZS 3622	Verification of timber properties
NZS 3640	Chemical preservation of round and sawn timber
AS/NZS 4357.0	Structural laminated veneer lumber - Specification
FTMA CoP	Frame and Truss Manufacturers Association Code of Practice

***A copy of** NZS 3604 **Timber-framed buildings, must be held on site.**

1.3 QUALIFICATIONS

Workers to be experienced, competent trades people familiar with the materials and techniques specified.

1.4 DIMENSIONS

All timber sizes except for battens are actual minimum dried sizes.

2 PRODUCTS

2.1 TIMBER FRAMING, TREATED

Species, grade and in service moisture content to NZS 3602, NZBC B2/AS1 and treatment to NZS 3640, NZBC B2/AS1. Structural grade (SG) to NZS 3604, NZS 3622 with properties to NZS 3603.

2.2 LAMINATED TIMBER

Radiata pine laminations to AS/NZS 1328.1; treated as required by NZS 3602, NZBC B2/AS1, to the requirements of NZBC B2/AS1, AS/NZS 1604.5, NZS 3640, with special attention to Appendix B "Specification advisory notes". Supply weather resistant sealed.

2.3 TIMBER TRUSSES

To FTMA CoP. Moisture content 16% at supply.

2.4 WALL DWANGS, NOGS AND BLOCKING

If dwangs, nogs or blocking is required for exterior insulated walls, ensure they are not full depth of framing. Install flush with face of wall required, leaving a minimum 20mm or 45mm preferable gap to the other face to NZS 3604, 8.8. Dwangs and nogs if required to be at 1350mm centres maximum to NZS 3604, 8.8.

2.5 EXTERIOR CAVITY WALL BATTENS - TIMBER - NON-STRUCTURAL

H3.1 or H3.2 Radiata pine battens, minimum 20mm thickness, width and height to match timber framing studs. Temporary fix battens before being fixed into the framing with the cladding fixings. To NZS 3602, table 1, reference 1D.10, Requirements for wood-based building components to achieve a 50-year durability performance.

2.6 EXTERIOR CAVITY WALL BATTENS - PROPRIETARY - NON-STRUCTURAL

Extruded polypropylene battens, size approximately 45mm wide x 18mm thickness. Temporary fix battens before being fixed into the framing with the cladding fixings. To the scope limitations of NZBC E2/AS1, and NZS 3604 Building Wind Zones up to, and including "Extra High".

Components

2.7 NAILS

Type to NZS 3604, section 4, **Durability**, and of the size and number for each particular types of joint as laid down in the nailing schedules of NZS 3604, sections 6-10.

2.8 BOLTS AND COACH SCREWS

Bolts and coach screws complete with washers, to the requirements of NZS 3604, clause 2.4.5 Bolts and Coach Screws, and section 4, **Durability**, and of the type, number and form required for each particular junction to NZS 3604, sections 6 - 10.

2.9 NAIL PLATES

Comply with the requirements of NZS 3604, section 4, **Durability**, and of the number and form required for each particular junction to NZS 3604, sections 6 - 10. Plates to the plate manufacturer's design for the particular locations as shown on the drawings.

2.10 CONNECTORS

Comply with the requirements of NZS 3604, section 4, **Durability**, and of the number and form required for each particular junction to NZS 3604, sections 6-10. Connectors and structural brackets to the connector manufacturer's design for particular locations shown on drawings.

2.11 CORROSION RISKS

For interior timber, treated with copper-based timber preservatives (H3.2 or higher), use a minimum of hot-dipped galvanized steel fixings and fasteners.

For exterior timber, timber in damp areas and timber subject to occasional wetting, use only stainless steel (or equivalent) fixings and connectors, when the timber is treated with; Copper Azole (CuAz, Preservative code 58), Alkaline Copper Quaternary (ACQ, Preservative code 90), Micronise Copper Azole (code 88) or Micronised Copper Quaternary (code 89).

2.12 DPC

Refer to 4161T THERMAKRAFT UNDERLAYS, FOILS & DPC

3 EXECUTION

3.1 EXECUTION GENERALLY

To NZS 3604 except as varied in this specification. Execution to include those methods, practices and processes contained in the unit standards for the National Certificate in Carpentry and the National Certificate in Joinery (cabinetry, exterior joinery, stairs).

3.2 SEPARATION

Separate all timber framing timbers from concrete, masonry and brick by: -

- a full length bituminous damp-proof membrane overlapping timber by at least 6mm; or
- a 12mm minimum free draining air space

3.3 ATTENDANCE

Provide and fix blocks, nogs, openings and other items as required by other trades.

3.4 MOISTURE CONTENT

Maximum allowable equilibrium moisture content (EMC) for non air-conditioned or centrally heated buildings for framing to which linings are attached.

Framing at erection:	24% maximum
Framing at enclosure:	20% maximum
Framing at lining:	16% maximum

3.5 SET-OUT

Set out framing in accordance with the requirements of NZS 3604 and as required to support sheet linings and claddings. When necessary provide framing to suit any required cladding/lining control joints and sheet joints.

3.6 FRAMING FLOORS

Framed and fastened to NZS 3604, section 7, **Floors**.

3.7 FRAMING WALLS

Frame to required loading and bracing complete with lintels, sills and nogs, all fabricated and fastened to NZS 3604, section 8, **Walls**.

3.8 FRAMING ROOFS

Frame to required loading and bracing complete with valley boards, ridge boards and purlins. Design and fit roof trusses complete with anchorage. All fabricated and fastened to NZS 3604, section 9, **Posts** and 10, **Roof framing**.

3.9 FRAMING CEILINGS

Frame to required loading and bracing complete with runners and battens set out to support ceiling lining. All fabricated and fastened to NZS 3604, section 13, **Ceilings**. Trim for openings in ceilings and hatches to NZS 3604 section 13.3, **Openings in ceilings**. Provide blocking for water tanks located in the ceiling space to NZS 3604, section 13.4, **Water tanks in roof space**.

3.10 INSTALLING WALL UNDERLAYS

Refer to 4161P PAUL INDUSTRIES UNDERLAYS, FOIL AND DPC

3.11 FIT CAVITY BATTENS

Fit and fix 20mm cavity battens over wall underlay or rigid air barrier, fully nail to timber studs to the requirements of the manufacturer or to NZS 3604. Fit and fix related flashings. Make allowance for cladding control joints where required. Fit and fix cavity closers to base of walls, open horizontal (or raking) junctions and over openings (windows, meters etc.).

3.12 DPC TO LOSP TREATED TIMBER

Refer to 4161T THERMAKRAFT UNDERLAYS, FOILS & DPC

3.13 DPC TO TIMBER

Refer to 4161T THERMAKRAFT UNDERLAYS, FOILS & DPC

4 SELECTIONS

4.1 EXTERIOR WALL FRAMING - RADIATA PINE

Member	Species	Grade	Treatment
Exterior walls:	Radiata pine	SG8	H1.2
Nogs	Radiata pine	SG8	H1.2
Wall battens (not cavity):	Radiata pine	Merch	H1.2
Jamb battens:	Radiata Pine	Merch	H3.1

4.2 CAVITY BATTENS

Cavity battens	Species	Grade	Treatment
Timber - Non Structural:	Radiata pine	Merchantable	H3.1

4.3 ROOF FRAMING - RADIATA PINE

Member	Species	Grade	Treatment
Rafters:	Radiata pine	SG8	H1.2
Trusses:	Radiata pine	SG8	H1.2
Purlins:	Radiata pine	SG8	H1.2
Ceiling battens:	Radiata pine	SG8	H1.2

4.4 INTERIOR FRAMING - RADIATA PINE

Member	Species	Grade	Treatment
Non structural walls:	Radiata pine	SG8	H1.2
Structural and braced walls:	Radiata pine	SG8	H1.2

4.5 NAILS

Refer to NZ3604:2011 Section 4 - Durability

4.6 SCREWS

Refer to NZ3604:2011 Section 4 - Durability

4.7 BOLTS AND SCREWS

Refer to NZ3604:2011 Section 4 - Durability

4.8 NAIL PLATES

Refer to NZ3604:2011 Section 4 - Durability

4.9 CONNECTORS

Refer to NZ3604:2011 Section 4 - Durability

4161P PAUL INDUSTRIES UNDERLAYS, FOIL AND DPC

1 GENERAL

This section relates to the application of **Paul Industries** products:
It includes;

- DPC
- wall wraps/wall underlay
- roofing underlays
- accessories

1.1 ABBREVIATIONS AND DEFINITIONS

Refer to the general section 1232 INTERPRETATION & DEFINITIONS for abbreviations and definitions used throughout the specification.

The following definitions apply specifically to this section:

Wall underlay	the same meaning as defined in NZBC E2/AS1, covering kraft based and synthetic wall underlays, sometimes called, wall wraps, building wraps or building papers.

Documents

1.2 DOCUMENTS

Refer to the general section 1233 REFERENCED DOCUMENTS. The following documents are specifically referred to in this section:

NZBC E2/AS1	External moisture
NZS 2295	Pliable, permeable building underlays
AS/NZS 2904	Damp-proof courses and flashings
NZS 3604	Timber-framed buildings
AS/NZS 4200.1	Pliable building membranes and underlays - Materials
AS/NZS 4347.0	Damp-proof courses and flashings - Methods of test - General introduction, list of methods and test specimen requirements
AS/NZS 4389	Roof safety mesh
AS/NZS 4534	Zinc and zinc/aluminium-alloy coatings on steel wire
NZMRM CoP	NZ Metal Roof and Wall Cladding Code of Practice

1.3 MANUFACTURER/SUPPLIER DOCUMENTS

Manufacturer's and supplier's documents relating to this part of the work:
Paul Industries Spec Sheets
BRANZ Appraisal 615 - Fast Wrap Building Wrap
BRANZ Appraisal 714 - Fast Wrap FlameSpec HW Roof Underlay
BRANZ Appraisal 715 - Fast Wrap FlameSpec SS Roof Underlay
BRANZ Appraisal 853 - Fast Wrap ULTRA-BOND Sill Tape
BRANZ Appraisal 984 - Pauloid Synthetic Roofing Underlay

Manufacturer/supplier contact details

Company:	**Paul Industries**
Web:	www.paulindustries.co.nz
Email:	info@paulindustries.co.nz
Telephone:	0800 330 320 / 07 578 8209
Facsimile:	07 928 5244

Requirements

1.4 QUALIFICATIONS

Installers to be experienced, competent trades people familiar with the manufacturer's materials and techniques specified and the NZMRM CoP NZ Metal Roof and Wall Cladding Code of Practice.

1.5 NO SUBSTITUTIONS

Substitutions are not permitted to any of the **Paul Industries** specified systems, components and associated products listed in this section.

2 PRODUCTS

Materials

DPM

2.1 DPM TO CONCRETE FLOOR

Refer to referenced concrete section.

Roofing Underlay

2.2 POLYOLEFIN ROOF UNDERLAY

Fast Wrap FlameSpec Roof Underlay, a synthetic fire retardant roof underlay made from a micro-porous water resistant film laminated to two layers of non woven spun bonded polyolefin. Refer to SELECTIONS for options.

Accessories

2.3 WINDOW SILLTAPE

Fast Wrap ULTRA-BOND Sill Tape, a flexible flashing tape system, comprised of white spun bonded polyethylene film faced, butyl rubber self-adhesive tape with a release backing paper. To NZBC E2/AS1, paragraph 4.3.11, **Flexible flashing tape**, paragraph 9.1.5, **Wall underlay to wall openings**.

2.4 FIXINGS

Staples, clouts, screws or propriety wrap/underlay fixings, or other temporary fixings to attach the wall wrap/underlay to the framing.

2.5 ADHESIVE TAPE

Polythene tape to compliment underlay.

3 EXECUTION

Conditions

3.1 GENERAL REQUIREMENTS

To NZBC E2/AS1 Table 23 Properties of Roof Underlays and Wall Underlays; and to Paul Industries technical literature.
NOTE: Care should be taken not to expose the underlay to continuous wet and windy conditions.

3.2 STORAGE

Store building underlays and accessory materials, under conditions that ensure no deterioration or damage. Store rolls in an upright position on a smooth floor and protected from sunlight, UV radiation and moisture.

3.3 INSPECTION

Before starting work, check that the framing will allow work of the required standard. Carry out remedial work identified before laying underlay.

Application - Roofing Underlay

3.4 ROOF/WALL UNDERLAY

Lay vertically over purlins on wire netting with a 150mm side lap. Fix securely to purlins with galvanized fixing clips. Lay underlay to avoid excessive dishing between purlins. When used vertically limit individual runs to 10 metres for bituminous based underlays, 7 metres for fire retardant underlays and 20 metres for synthetic roofing underlays. Do not lay vertically on roof pitches under 10°.

Lay horizontally across the rafter/trusses starting at the gutter line with succeeding sheets in true alignment and lapping 150mm. Scribe around and fit neatly to all penetrations. Avoid prolong exposure by installing the roof immediately.

Application - window sill tape

3.5 WINDOW SILL TAPE

Install **Fast Wrap ULTRA-BOND Sill Tape** in accordance with Paul Industries technical installation instructions.
Install flexible flashing tape system into and around the framed joinery opening over the wall underlay and exposed frame to cover both the face and edge of the opening. Use also at joinery heads to seal flashing upstands to the wall underlay.

Completion

3.6 CLEAN UP

Clean up as the work proceeds.

3.7 LEAVE

Leave work to the standard required by following procedures.

3.8 REMOVE

Remove debris, unused materials and elements from the site.

4 SELECTIONS

For further details on selections go to www.paulindustries.co.nz.
Substitutions are not permitted to the following, unless stated otherwise.

Wall Wrap/wall underlay

Roofing Underlay

4.1 FAST WRAP FLAMESPEC - FIRE RETARDANT SYNTHETIC ROOF UNDERLAY

Type:: Fast Wrap FlameSpec SS Roof Underlay, self supporting

Accessories - window sill tape

4.2 FAST WRAP ULTRA-BOND SILL TAPE

Brand/type: **Fast Wrap ULTRA-BOND Sill Tape**

4161T THERMAKRAFT UNDERLAYS, FOILS, DPC, DPM, & TAPES

1 GENERAL

This section relates to the application of **Thermakraft Ltd**, DPC, DPM, Wall & Roof Underlays, Foils, Flashing Tapes, and accessories.

1.1 RELATED WORK

Refer to 3820 Carpentry

1.2 ABBREVIATIONS AND DEFINITIONS

Refer to the general section 1232 INTERPRETATION & DEFINITIONS for abbreviations and definitions used throughout the specification.

The following abbreviations apply specifically to this section:

NZMRM	New Zealand Metal Roofing Manufacturers Inc.

The following definitions apply specifically to this section:

Wall underlay	the same meaning as defined in NZBC E2/AS1, covering kraft based and synthetic wall underlays, sometimes called wall wraps, building wraps or building papers.

Documents

1.3 DOCUMENTS

Refer to the general section 1233 REFERENCED DOCUMENTS. The following documents are specifically referred to in this section:

NZBC C/AS2	Protection from fire
NZBC E2/AS1	External moisture
AS 1530.2	Methods for fire tests on building materials, components and structures - Test for flammability of materials
NZS 2295	Pliable, permeable building underlays
AS/NZS 2904	Damp-proof courses and flashings
NZS 3604	Timber-framed buildings
NZS 4214	Methods of determining the total thermal resistance of parts of buildings
AS/NZS 4389	Roof safety mesh
AS/NZS 4534	Zinc and zinc/aluminium-alloy coatings on steel wire
NZMRM CoP	NZ Metal Roof and Wall Cladding Code of Practice

1.4 MANUFACTURER/SUPPLIER DOCUMENTS

Thermakraft documents relating to work in this section are:
Thermakraft product manual and technical data sheets.
BRANZ Appraisal 329 - Supercourse 500™ Damp-Proof Course and Concealed Flashing
BRANZ Appraisal 611 - James Hardie Rigid Air Barriers
BRANZ Appraisal 651 - Thermakraft Covertek™ 407 Roof and Wall Underlay
BRANZ Appraisal 695 - Watergate Plus™ Wall Underlay
BRANZ Appraisal 743 - Thermakraft Covertek 405™ Roof and Wall Underlay
BRANZ Appraisal 878 - Thermakraft Aluband™ Window Flashing Tape
BRANZ Appraisal 912 - Thermakraft 220™ Synthetic Wall Underlay
BRANZ Appraisal 917 - Thermakraft Covertek 403™ Roof and Wall Underlay
BRANZ Appraisal 942 - OneSeal™ Multi-Fit Pipe and Cable Penetration Seals
BRANZ Appraisal 943 - Thermakraft Covertek 401™ Roof Underlay
BRANZ Appraisal 962 - The Thermakraft One Wrap System™
BRANZ Appraisal 1000 - Thermakraft Thermabar 397™ Light Diffusing Reflective Underlay
BRANZ Appraisal 1029 - Thermakraft Ausnet™ Hexagonal Wire Mesh
BRANZ Appraisal 1104 – Thermathene Orange™ Concrete Underlay
BRANZ Appraisal 1122 – Thermaflash™ Flashing Tape

Code Mark Certificate 30069 - Thermakraft Covertek 403™ Absorbent Breathable Roof Underlay
Code Mark Certificate 30030 - Thermakraft Covertek 405™ Absorbent Breathable Roof Underlay
Code Mark Certificate 30028 - Thermakraft Covertek 407™ Absorbent Breathable Roof Underlay
Code Mark Certificate 1002 - Thermakraft Watergate Plus™ Wall Underlay

Manufacturer/supplier contact details

Company:	Thermakraft Ltd
Web:	www.thermakraft.co.nz
Email:	info@thermakraft.co.nz
Telephone:	0800 806 595

Warranties

1.5 WARRANTY - MANUFACTURER/SUPPLIER

Warrant this work under normal environmental and use conditions against failure of materials and execution. Thermakraft Ltd warrant performance of products if design and installation comply with relevant technical literature, NZBC, and recognised industry Codes of Practice. Copy of Thermakraft ™ Product Warranty available on request.

Requirements

1.6 NO SUBSTITUTIONS

Substitutions are not permitted to any specified materials, or associated products, components or accessories.

1.7 INSTALLATION SKILL LEVELS

Installers to be experienced in the installation of Thermakraft ™ products and familiar with Thermakraft ™ technical literature and the related documents listed in this design i.e. NZMRM CoP NZ Metal Roof and Wall Cladding Code of Practice.

2 PRODUCTS

Materials

Damp Proof Course

2.1 SUPERCOURSE 500™ DPC

Supercourse 500™, high-impact polyethylene film to AS/NZS 2904 and embossed on both sides. Thickness 500 microns minimum, manufactured for use as a damp-proof course and concealed flashings around doors and windows and to BRANZ Appraisal 329. Refer to SELECTIONS for type of joining tape.

Accessories

2.2 ALUBAND™ BITUMINOUS FLASHING TAPE

Thermakraft Aluband™ window flashing tape consists of synthetic faced reinforced bituminous window sealing tape, in widths of 75mm, 150mm and 200mm. Used to repair damaged bituminous underlays. Bitumen may react to sealants, always check compatibility. Thermakraft Corner Moulds must be used. Exposure 42 days. Install from 5°C. BRANZ Appraisal 878, and is included in the Thermakraft One Wrap System™BRANZ Appraisal 962.

2.3 THERMAFLASH™ WINDOW FLASHING TAPE

Thermaflash™ is a self-adhesive synthetic flexible window flashing tape, with superior adhesion. can be used with rigid air barrier or rigid wall underlay products. Suitable for use as a flexible flashing around window and door joinery openings. On windows, the use of a Thermakraft Corner Mould™, is optional however butterfly strips must be applied. Available in widths of 75mm, 150mm and 200mm. Use in conjunction with air seals and joinery flashing systems around window and door joinery on timber, steel framed and medium rise buildings.
Compatible with a wide range of sealants but check compatibility. Exposure 180 days. NOT to be used as a flashing tape. BRANZ Appraisal 1122, and is included in the Thermakraft One Wrap System™BRANZ Appraisal 962. Approved for use with the James Hardie™ RAB™ Board system refer BRANZ Appraisal 611.

2.4 ONESEAL™ MULTI-FIT SEALS FOR CABLE AND PIPE PENETRATIONS

Thermakraft OneSeal™, multi-fit pipe seals comprise a UV resistant EPDM material which forms a weathertight air seal for pipes and penetrations with a high strength acrylic adhesive suitable for use on all underlay systems. Available for use with pipes 15-110mm and cables 7-22mm both are pre-punched ensuring a tight accurate fit. No special tools required for installation. Approved for use with the James Hardie™ RAB™ Board system, refeBRANZ Appraisal 611. Included in the Thermakraft One Wrap System™BRANZ Appraisal 962

2.5 PREMIUM JOINING TAPE™

Thermakraft Premium Joining Tape™, an acrylic, reinforced tape with superior adhesion and tear resistance used to join laps of wall and roof underlays, plywood rigid underlay, OSB board, fibre cement and insulation panels, DPM and vapour control products such as foil underlays. Exposure 180 days, install from -10oC. Compatibility of the substrate with Premium Joining Tape must be checked by the designer or the installer prior to use. BRANZ Appraised and approved for use with the James Hardie™ RAB™ Board system, refeBRANZ Appraisal 611. NOT to be used as a flashing tape.

3 EXECUTION

Conditions

3.1 GENERAL REQUIREMENTS

Design application and installation of Thermakraft Building products to NZBC E2/AS1, BRANZ Appraisals, Thermakraft Technical Literature and Industry Codes of Practice.

Application DPC

3.2 DPC TO LOSP/CCA TREATED TIMBER

Lay Supercourse 500™ DPC under LOSP or CCA treated bottom plate of all timber framed walls on concrete, in a single layer with 50mm overlaps at joints to provide a waterproof barrier.

3.3 DPC TO TIMBER / STEEL

Lay Supercourse 500™ under the bottom plate of all timber / steel framed walls on concrete, in a single layer with 50mm overlaps at joints to provide a waterproof barrier.
Refer to SELECTIONS for type.

3.4 DPC TO MASONRY AND BRICK VENEER

Lay Supercourse 500™ along based of cavity and fix top edge to studs with galvanized clouts. Turn DPC out over concrete rebate under bottom course of veneer.

Completion

3.5 COMPLETION MATTERS

Refer to 1270 CONSTRUCTION for completion requirements and if required commissioning requirements.

4 SELECTIONS

For further details on selections go to www.thermakraft.co.nz.
Substitutions are not permitted to the following, unless stated otherwise.

Damp Proof Course

4.1 THERMAKRAFT - SUPERCOURSE 500™ DPC

Location:	Between all timber and concrete junctions
Type:	Supercourse 500™ DPC
Jointing tape:	Thermakraft™ window sill tape 75mm Aluband™

4171E ECOPLY® BARRIER RIGID AIR BARRIER SYSTEM

1 GENERAL

This section relates to the use of Carter Holt Harvey Plywood Ltd (CHH PLY) **Ecoply® Barrier** as a rigid wall underlay and air barrier in residential and commercial buildings.

1.1 ABBREVIATIONS AND DEFINITIONS

Refer to the general section 1232 INTERPRETATION & DEFINITIONS for abbreviations and definitions used throughout the specification.

The following abbreviations apply specifically to this section:

FSC®	Forest Stewardship Council®
COC	Chain of Custody

Documents

1.2 DOCUMENTS

Refer to the general section 1233 REFERENCED DOCUMENTS. The following documents are specifically referred to in this section:

NZBC B1/AS1	Structure
NZBC B2/AS1	Durability
NZBC E2/AS1	External moisture
AS/NZS 4680	Hot-dip galvanized (zinc) coatings on fabricated ferrous articles
AS/NZS 1604.3	Specification for preservative treatment - Plywood
AS/NZS 2269.0	Plywood - structural - specifications
NZS 3602	Timber and wood-based products for use in building
NZS 3603	Timber Structures Standard
NZS 3604	Timber-framed buildings
BRANZ Technical Paper P21	BRANZ Technical Paper P21 (2010): A wall bracing test and evaluation procedure

Documents listed above and cited in the clauses that follow are part of this specification. However, this specification takes precedence in the event of it being at variance with the cited document.

1.3 MANUFACTURER'S DOCUMENTS

Carter Holt Harvey Plywood Limited documents relating to work in this section are:
Ecoply® Structural Rigid Air Barrier - Barrier Specification & Installation Guide
CHHPly Product Technical Statement – Ecoply® Barrier: Rigid Air Barrier
Ecoply® Barrier data sheets
CHHPly Safety Data Sheet - Ecoply® Barrier
Ecoply® Barrier CAD drawings
BRANZ Appraisal 827 - Ecoply® Barrier Rigid Air Barrier
Carter Holt Harvey Plywood - Tokoroa Certificate Code: SCS-COC-001316 Trademark License Code: FSC-C012019, Controlled Wood SCS-CW-001316, expires 5 June 2023.

Copies of the current product literature are available from Carter Holt Harvey Plywood Ltd.

Web:	www.ecoplybarrier.co.nz
Telephone:	0800 326 759

1.4 NO SUBSTITUTIONS

Substitutions are not permitted to any of the specified systems, components and associated products listed in this section.

Performance

1.5 BRACING SYSTEM

The Ecoply® Barrier bracing system provides bracing resistance for walls of light timber framed buildings under wind and earthquake loading to NZBC B1 and NZS 3603. Bracing units are derived from BRANZ P21 test method.

- Refer to drawings for brace location, length and type.
- Refer to Ecoply® Structural Rigid Air Barrier - Barrier Specification & Installation Guide for bracing details.
- Refer to table for summary of P21 Ratings for 2.4m high Ecoply® Barrier wall bracing elements:

Brace type	Min. wall length	Lining Requirements	Gib HandiBrac® Hold-Downs	Bus/m Wind	Bus/m EQ
EPB1	0.4m	Ecoply® Barrier one side	Required	80	95
EPB1	0.6m	Ecoply® Barrier one side	Required	95	105
EPB1	1.2m	Ecoply® Barrier one side	Required	120	135
EP2	0.6m	Ecoply® Barrier each side	Required	105	115
EPBS	0.4m	Ecoply® Barrier one side	Not required	60	60
EPBS	0.6m	Ecoply® Barrier one side	Not required	60	65
EPBS	1.2m	Ecoply® Barrier one side	Not required	65	70
EPBS	2.4m	Ecoply® Barrier one side	Not required	80	90
EPBG	0.4m	Ecoply® Barrier one side & 10mm Gib® Standard plasterboard other side	Required	100	115
EPBG	1.2m	Ecoply® Barrier one side & 10mm Gib® Standard plasterboard other side	Required	150*	150*

Note* - Maximum 120 Bus/m for any bracing element on timber framed floor (NZS 3604)

2 PRODUCTS

Materials

2.1 ECOPLY® BARRIER PLYWOOD

Ecoply® Barrier sheet, 7mm thick, 1197mm wide and 2440 and 2745mm long structural plywood. Manufactured from radiata pine to AS/NZS 2269. H3.2 CCA treated to E2/AS1 and AS/NZS 1604.3 requirements. Beige polyester powder coated on front face and four edges. Sheets marked Ecoply® Barrier.

Components

2.2 NAILS

Nails to minimum durability requirements of the NZBC. Refer to NZS 3604, section 4, **Durability**, for requirements for fixing's material to be used in relation to the exposure conditions.

Fixing method:	Nail type:	Zone:
Hand driven	50 x 2.8mm (flat head or round head) hot-dip galvanized to AS/NZS 4680	B & C zones
Power driven Paslode Pneumatic Cladding Coil Nailer	Paslode Impulse 50 x 2.8mm hot-dip galvanized ring round head drive B20557	B & C zones
Hand driven	50 x 2.8mm (flat head or round head) annular grooved stainless steel (grade 304 or 316)	D Zone

3 EXECUTION

Conditions

3.1 DELIVERY, STORAGE & HANDLING OF PRODUCTS

Refer to 1270 CONSTRUCTION for requirements relating to delivery, storage and handling of products.

3.2 ROUTINE MATTERS

Refer to 1250 TEMPORARY WORKS & SERVICES for protection requirements.
Refer to 1270 CONSTRUCTION for requirements relating to defective or damaged work, removal of protection and cleaning.

3.3 WALL FRAMING

Kiln dried verified structural grade timber, minimum SG8. Framing sizes and set outs to NZS 3604 with studs at 600mm maximum centres, nogs at 1350mm maximum centres and 45mm minimum framing width at sheet joints. Treatment to NZBC B2/AS1 and NZS 3602.

Application

3.4 SUPPORT EDGES AND JOINTS

Fully support edges and joints with a minimum framing width of 45mm at each Ecoply® Barrier sheet joint.

3.5 FIXING ECOPLY® BARRIER SHEETS

Position Ecoply® Barrier sheets with the water-resistant powder coat film facing outwards with the long side of the sheet orientated vertically to framing members. Allow 2-3mm expansion gap between vertical sheet edges. Place any cut sheet ends at the top with the sealed sheet end at the bottom. Cover all other cuts and penetrations with Ecoply® Barrier Sealing tape. Sheets to overhang the bottom plate, joist or bearer by a minimum of 25mm.

3.6 FASTENERS - STANDARD NAILING PATTERN

Nail 7mm minimum from sheet edges at 150mm centres around perimeter of each sheet or part sheet, and 300mm centres within sheet body up to and including Very High wind zone, or 150mm centres within sheet body in Extra High wind zone. Finish fastener heads flush with the panel surface.

3.7 FIXING TO RESIST UPLIFT

For 4.7kN fixing of top plate to studs modify standard nailing pattern, nail sheet edge to top plate at 75mm centres, 20mm from the sheet edge.

Completion & Commissioning

3.8 COMPLETION MATTERS

Refer to 1270 CONSTRUCTION for completion requirements and if required commissioning requirements.

3.9 COMPLETION - TESTS & CERTIFICATION

Refer to 1270 CONSTRUCTION for general test and certification requirements at completion.

4 SELECTIONS

For further details on selections go to www.ecoplybarrier.co.nz
Substitutions are not permitted to the following, unless stated otherwise.

4.1 ECOPLY® BARRIER PLYWOOD

Location:	All exterior walls as shown on the drawings
Manufacturer:	CHH Woodproducts
Brand/grade:	Ecoply® Barrier DD A BOND
Stress grade:	F8
Thickness:	7mm
Treatment:	H3.2 CCA

4.2 ECOPLY® BARRIER BRACING

Refer to Ecoply® Structural Rigid Air Barrier - Barrier Specification & Installation Guide for specific bracing details. For bracing element location refer to drawn documentation.

4239JH JAMES HARDIE® SOFFITS

1 GENERAL

This section relates to the supply and fixing of **James Hardie®** products to the underside of exterior soffits, verges and eaves. It includes:

- James Hardie® Eclipsa™ Eaves Lining
- James Hardie® HardieFlex™ Eaves Lining
- James Hardie® HardieGroove™ Soffit Lining
- James Hardie® HardieSoffit™ Lining
- James Hardie® Villaboard™ Soffit Lining

1.1 RELATED WORK

Refer to 3820 Carpentry
Refer to 7411 Rainwater Spouting Systems
Refer to painting section/s for the protective coating required to meet the NZBC durability requirements.

Documents

1.2 DOCUMENTS

Refer to the general section 1233 REFERENCED DOCUMENTS. The following documents are specifically referred to in this section:

NZBC E2/AS1	External moisture
AS/NZS 1170.2	Structural design actions - Wind actions
AS/NZS 2908.2	Cellulose-cement products - Flat sheet
NZS 3602	Timber and wood-based products for use in building
NZS 3604	Timber-framed buildings
NASH Standard Part 2	May 2019 Light Steel Framed Buildings

1.3 MANUFACTURER/SUPPLIER DOCUMENTS

James Hardie® documents relating to this part of the work:
James Hardie® Eaves and Soffits Installation Manual
James Hardie® Fire and Acoustic Design Manual.

Manufacturer/supplier contact details

Company:	James Hardie New Zealand Limited
Web:	www.jameshardie.co.nz
Email:	info@jameshardie.co.nz
Telephone:	0800 808 868

Warranties

1.4 WARRANTY - MANUFACTURER/SUPPLIER

Provide a material manufacturer/supplier warranty:

15 years:	For James Hardie® HardieFlex™ Eaves Lining

(refer to James Hardie® product warranty)

15 year:	For accessories supplied by James Hardie® (refer to James Hardie® product warranty)
From:	Date of purchase

- Provide this warranty on the manufacturer's standard form.

Refer to the general section 1237 WARRANTIES for additional requirements.

Requirements

1.5 QUALIFICATIONS

Workers / Installers / applicators to be experienced, competent trades people familiar with the materials and techniques specified.

1.6 NO SUBSTITUTIONS

Substitutions are not permitted to any of the specified systems, components and associated products listed in this section.

1.7 SAFE WORKING

To James Hardie® requirements for safe working practices with James Hardie® products, particularly with regards to cutting and drilling.

1.8 INFORMATION FOR OPERATION AND MAINTENANCE

Provide relevant James Hardie maintenance requirements at completion of the work.

Performance

1.9 PERFORMANCE - UP TO AND INCLUDING VERY HIGH WIND ZONE

The design wind speeds/zones are to NZS 3604, up to and including Very High Wind Zone. James Hardie® Eaves and Soffits Installation Manual requirements are suitable for these conditions.

2 PRODUCTS

Materials

2.1 HARDIEFLEX™ EAVES LINING

James Hardie® HardieFlex™ Eaves Lining 4.5mm and 6mm thick cellulose fibre reinforced cement sheet. Manufactured to AS/NZS 2908.2 from Portland cement, ground sand, cellulose fibre and water.

Components

2.2 FASTENER TYPE

Fasteners to minimum durability requirements of the NZBC. Refer to NZBC E2/AS1, Table 20, Material selection for fixing material, and NZBC E2/AS1, Table 21, Compatibility of materials in contact, for selection of suitable fixing materials and their compatibility with other materials.

Exposure	Fixing	Fixing Material	Zone
Sheltered	Nail	Hot-dip galvanized steel	B
Sheltered	Nail	Stainless steel	B, C, D, E
Sheltered	Screw	Stainless steel	B, C, D, E

Check against SED (specific engineering design) requirements for microclimate conditions. Refer to SELECTIONS for fastener type.

Components - HardieFlex™ Eaves Lining

2.3 SOFFIT JOINTERS AND MOULDS

Extruded uPVC jointer, capping and scotia mould.

2.4 HARDIEFLEX™ NAILS

HardieFlex Nail, 40 x 2.8mm stainless steel or galvanized nail, Refer to SELECTIONS.

2.5 INSEAL TAPE

Inseal® 3259, 1.5mm thick x 50mm wide black compressible medium density closed cell foam tape.

2.6 POLYPROPYLENE TAPE

Polypropylene tape, 30mm minimum width.

Components - General

2.7 FLEXIBLE JOINT SEALANT

Refer to SELECTIONS.

3 EXECUTION

Conditions

3.1 STORAGE

Take delivery of products dry and undamaged. Store on site, lay flat on a smooth level surface clear of the ground. Protect materials, finished surfaces, edges and corners from damage, water and moisture.

3.2 HANDLING

Move/handle goods in accordance with James Hardie® requirements. Avoid distortion and contact with potentially damaging surfaces. Do not drag sheets across each other, or across other materials. Protect edges, corner and surface finish from damage. Reject and replace goods that are damaged or will not provide the required finish. Install materials in a dry state.

3.3 SUBSTRATE - TIMBER FRAMING

Do not commence work until the substrate is of the standard required for the specified finish; plumb, level and in true alignment. Moisture content of timber framing must not exceed the requirements specified by NZS 3602 to minimise shrinkage and movement after sheets are fixed.

3.4 COMMENCE WORK

Do not commence work until the roof has been installed.

Application - general

3.5 SHEET LAYOUT

All sheet edges must be fully supported by framing or rebates in fascia and barge boards.

3.6 CUTTING SOFFIT CLADDING

Cut sheets dry using score and snap method, hand guillotine method or fibreshear heavy duty method. If these methods are not feasible, use an alternative manufacturer approved method.

3.7 CIRCULAR HOLE FORMING

Mark the centre of the hole on the sheet, pre-drill a pilot hole. Use the pilot hole as a guide for a hole saw fitted to a heavy duty electric drill.

3.8 IRREGULAR HOLE FORMING

Drill a series of small holes around the perimeter of the proposed hole, tap out the waste piece from the sheet face.

3.9 INSTALL HARDIEFLEX™ EAVES LINING

Install in accordance with James Hardie® installation manual requirements. Refer to SELECTIONS for fixing and jointing methods.

3.10 BUTT JOINT

Paint sheet edges prior to installation.

3.11 CONTROL JOINT

Install control joint to James Hardie® installation manual requirements.

3.12 FASTENER - SIZE AND LAYOUT

Fix sheets to framing using fasteners as nominated in SELECTIONS. Fix to James Hardie® installation manual requirements.

3.13 SEALANTS

Application and use of sealants to manufacturer's instructions. Check with sealant manufacturer prior to coating over sealants.

3.14 PAINTING

Refer to painting section/s for protective coating system.

Completion

3.15 COMPLETE

Ensure the work is complete with all components, accessories, trim, sealant and finishing properly installed so the soffit cladding system is completely weathertight.

3.16 REPLACE

Replace all damaged or marked elements.

3.17 CLEAN

Clean surfaces.

3.18 LEAVE

Leave work to the standard required for following procedures.

3.19 REMOVE

Remove debris, unused materials and elements from the site.

4 SELECTIONS

For further details on selections go to www.jameshardie.co.nz
Substitutions are not permitted to the following, unless stated otherwise.

Materials

4.1 HARDIEFLEX™ EAVES LINING

Location:	All Soffits
Brand/type:	James Hardie® HardieFlex™ Eaves Lining
Thickness:	4.5mm
Width:	Typically 450mm unless noted other wise on sheet 504
Fixing Method:	HardieFlex™ nails
Fixing type:	Stainless steel HardieFlex™ Nail, 40 x 2.8mm
Joint detail:	Hardiejointer™ 5mm

Painting

4.2 PAINTING

Refer to painting section/s for details.

4282C SPECIALIZED EZPANEL AAC PANEL CLADDING SYSTEM

1 GENERAL

This section relates to SPECIALIZED CONSTRUCTION PRODUCTS (**SCP**) EZpanel Aerated Concrete wall cladding system with a plaster finish based on 50mm aerated concrete panels fixed to timber/metal framing on a drained / ventilated cavity.

1.1 ABBREVIATIONS AND DEFINITIONS

Refer to the general section 1232 INTERPRETATION & DEFINITIONS for abbreviations and definitions used throughout the specification.
The following abbreviations apply specifically to this section:

SCP	Specialized Construction Products
MPNZA	Master Painters New Zealand Association
AAC	Autoclaved Aerated Concrete
LRV	Light reflectance value

Documents

1.2 DOCUMENTS

Refer to the general section 1233 REFERENCED DOCUMENTS. The following documents are specifically referred to in this section:

NZBC E2/AS1	External moisture
AS/NZS 1170.2	Structural design actions - Wind actions
AS/NZS 2311	Guide to the painting of buildings
AS 3566	Self-drilling screws for the building and construction industries
NZS 3602	Timber and wood-based products for use in building
NZS 3604	Timber-framed buildings
WorkSafe:	Guidelines for the provision of facilities and general safety in the construction industry
MPNZA	Health and Safety Programme

Health and Safety at Work Act 2015

1.3 MANUFACTURER/SUPPLIER DOCUMENTS

Manufacturer and supplier documents related to this section are:
EZpanel Exterior Plasterwork Specifications and Design Solutions.
Specialized Construction Products Technical Data Sheets.
BRANZ Appraisal 649 - EZpanel Cavity System

Materials and execution to Specialized Construction Products specification except where varied by this specification and supported by architectural detailing.

Copies of the above literature are available from:

Company:	Specialized Construction Products
Web:	www.specialized.co.nz
Email:	info@specialized.co.nz
Telephone:	09 414 4499

Warranties

1.4 WARRANTY

SCP warrant this system under normal environmental and use conditions against failure of materials and execution. The plaster system is warranted as follows:

Materials:	15 years from date of practical completion issued by the manufacturer.
Execution:	5 years from the date of practical completion issued by the Certified EZpanel contractor upon completion.

A warranty pack including a producer statement from the Certified EZpanel contractor and a guarantee plaque to be adhered to the inside of the meter box for the project, must be made available by the Certified contractor at the date of practical completion.

Requirements

1.5 NO SUBSTITUTIONS

Substitutions are not permitted to any specified **SCP** plaster system.

1.6 QUALIFICATIONS

Use only applicators Certified by Specialized Construction Products to apply the exterior wall cladding system.

Documentation

1.7 INFORMATION FOR OPERATION AND MAINTENANCE

Provide **SCP** maintenance instructions before practical completion of the contract for issuing to the building owner.

1.8 HEALTH AND SAFETY

Refer to the requirements of the Health and Safety at Work Act 2015 and WorkSafe: Guidelines for the provision of facilities and general safety in the construction industry.
If the elimination or isolation of potential hazards and risks is not possible then minimise hazards and risks in this work on site by using the proper equipment and techniques as required in the MPNZA Health and Safety Programme. Supply protective clothing and equipment. Inform employees and others on site of the hazards and risks, and put into place procedures for dealing with emergencies. Obtain from **SCP** the material safety data sheets for each product. Keep sheets on site and comply with the required safety procedures.

Performance

1.9 PERFORMANCE

The Certified EZpanel contractor must accept responsibility for the structural and weather-tight performance of the exterior render application.

1.10 PROTECTION OF NEW PLASTER

Confirmation of the protection systems to be applied to fresh plaster coats to be agreed between the main contractor and the Certified applicator before plastering begins.

1.11 INSPECTIONS

Allow to inspect the whole of the work at each stage. Determine a programme for inspections including notification when each part and stage of the work is ready for inspection prior to the work commencing. Permit representatives from **SCP** to inspect the work in progress and to take samples of their products from site.

1.12 PRODUCER STATEMENT

Provide a producer statement compiled by the Certified EZpanel contractor in the form as required by the Building Consent Authority.

1.13 FIXINGS, WIND

Design and use the fixings appropriate for the wind zone (R) and topographical classification (T) of this site and building height; as required by NZS 3604 and the wind loads on various wall areas as given by AS/NZS 1170.2.

2 PRODUCTS

Materials

2.1 EZPANEL AAC PANELS

50mm thick Autoclaved Aerated Concrete Panels measuring 600 mm x 2200 mm.

Cement Plaster

2.2 CEMENT PLASTER - FINE MESH COAT

A factory mixed cementitious polymer modified plaster used as a bedding compound for detailed reinforcing work around penetrations and areas where the reinforcing mesh must be bent.

2.3 CEMENT PLASTER - EZPANEL BASE COAT

Factory-mixed polymer modified plaster coating containing Portland cement, sand, lime and other admixtures. Used as a bedding compound for the fibreglass mesh used to reinforce the surface of the AAC panels.

2.4 CEMENT PLASTER - STUCCO TEXTURE FINISH

Factory-mixed polymer modified cement based plaster sprayed through a hopper gun to achieve a heavy stucco plaster finish.

2.5 CEMENT PLASTER - FLOAT FINISH

Factory-mixed polymer modified cement based plaster polished flat to achieve a fine granular finish.

2.6 CEMENT PLASTER - SPANISH FINISH

Factory-mixed polymer modified cement based plaster to achieve an undulating adobe style finish.

2.7 CEMENT PLASTER - FINE SPRAY TEXTURE FINISH

Factory mixed polymer modified cement based plaster sprayed through a sagola gun to achieve a sharp stipple texture.

2.8 CEMENT PLASTER - GRANOPOR TOP 1.5MM ACRYLIC TEXTURE FINISH

A ready to use, synthetic resin-base render which is polished flat to achieve a fine granular finish.

2.9 CEMENT PLASTER - GRANOPOR FINE 1.0MM ACRYLIC TEXTURE

A ready to use, synthetic resin-based render which is polished flat to achieve a fine granular finish or sprayed through a hopper gun or a sagola gun to achieve a fine stippled appearance.

Acrylic Plaster

2.10 ACRYLIC PLASTER - POWAFLEX BASE COAT

Powaflex Acrylic plaster is a ready to use, organically bound base coat. Used as a bedding compound for the fibreglass mesh used to reinforce around penetrations and the surface of the AAC panels.

2.11 ACRYLIC PLASTER - GRANOPOR TOP 1.5MM ACRYLIC TEXTURE

A ready to use, synthetic resin-base render which is polished flat to achieve a fine granular finish.

2.12 ACRYLIC PLASTER - GRANOPOR FINE 1.0MM ACRYLIC TEXTURE

A ready to use, synthetic resin-based render which is polished flat to achieve a fine granular finish or sprayed through a hopper gun or a sagola gun to achieve a fine stippled appearance.

Paint Finish

2.13 PRIMER - LIMESTOP

Limestop water based primer applied over cement based finishing plaster before the paint coating. Refer to SELECTIONS.

2.14 PAINT SYSTEM - PLASTERSHIELD

Plastershield 100% acrylic latex compatible with cement based or acrylic based plaster and suitable for textured surfaces and tinted to the selected colour. Refer to SELECTIONS.

Components

2.15 EZPANEL FIXINGS, TIMBER FRAME 20mm CAVITY

To AS 3566. 100mm long Corrosion Class 4 wood screws with a head diameter of 14mm and a shank diameter of 5.1mm. To NZS 3604 defined Corrosion Zones B and C and Grade 304 stainless steel 6-gauge in Zone D and Zone E (NZBC E2/AS1).

2.16 EZPANEL ADHESIVE

Sabre Fix PU adhesive for temporarily bonding EZpanel joints during construction prior to plastering.

2.17 EXTERIOR CAVITY BATTENS

For 20mm Cavity - 50mm x 21mm Ultra high density (Class UHD) expanded polystyrene battens with an approximate density of 28kg/m³, and are fixed with glue.

For 40mm Cavity - EZpanel battens for a 40mm cavity installation are manufactured from either;

- 41mm x 50mm Ultra High Density (Class UHD) expanded polystyrene battens with an approximate density of 28kg/m³ and are fixed with glue or 50mm galvanised flathead nails.
- 40mm x 40mm x 200mm H3.2 CCA timber batten ties with a minimum slope of 15 degrees on the top edge, fixed with two 75mm galvanised ringshank nails.

40mm polystyrene battens must only be used in situations where the bottom edge of the sheet is fully supported by a rebate in the slab or an appropriate weight bearing lintel.
Polystyrene battens fixed to studs at maximum 600mm horizontal centres (stud centres), and at maximum 600mm vertical centres (at all horizontal joints between the EZpanels). Additional battens may be required at corners and around openings

2.18 REINFORCING MESH

Alkali-resistant fibreglass woven reinforcing mesh with a nominal size of 4mm x 4mm square and a weight of 160 g/m².

Accessories

2.19 FLASHINGS AND ACCESSORIES

Proprietary profiles made from rigid uPVC for head, sill, and jamb flashings, lipped L-bead, 50mm U-channel, 70mm U-channel, 20mm x 20mm corner bead, 50mm x 20mm L-bead, flat U-channel and 50mm high back U-channels.

2.20 EXTERIOR CAVITY BASE BEAD

Proprietary cavity base bead made from rigid uPVC. Base bead to have 3mm x 10mm slots to provide 1000mm² ventilation per linear metre.

2.21 SEALANTS

Paintable MS sealant in accordance with **SCP**'s guide and set against backer rods where necessary.

2.22 WATERPROOF MEMBRANE TAPES

Tapes covered by a valid BRANZ appraisal for use as waterproof membranes over the tops of plastered parapets, balustrades, fixing blocks etc.

2.23 ADHESIVE

AAC compatible construction adhesive for adhering uPVC components to the EZpanel as and where required.

3 EXECUTION

Conditions

3.1 DELIVERY, STORAGE & HANDLING OF PRODUCTS

Refer to 1270 CONSTRUCTION for requirements relating to delivery, storage and handling of products.

Additional special requirements:

- Deliver all materials in original unopened packaging with labels intact.
- Provide dry storage on site, stack carefully, protect from mechanical damage.
- Keep bagged render off concrete surfaces on a timber pallet or timber dunnage.
- Plaster stock older than six months must be discarded.
- Battens, uPVC flashings and profiles must be protected from direct sunlight and

3.2 ROUTINE MATTERS

Refer to 1250 TEMPORARY WORKS & SERVICES for protection requirements.
Refer to 1270 CONSTRUCTION for requirements relating to defective or damaged work, removal of protection and cleaning.

3.3 PLASTERING CONDITIONS

Carry out plastering to **SCP**'s specifications under conditions which will not adversely affect the finished work.

3.4 PROTECT

Before application of plaster, apply masking film and tape to all joinery, pipes, roofs and all areas likely to be marked by the plaster. Use drop cloths and ground covers to keep the working areas clean. Clean droppings off finished work immediately.

3.5 SUBSTRATE - TIMBER FRAME

Do not commence work until the framing is of the standard required for the specified finish; plumb, level and in true alignment. Moisture content of timber framing must not exceed the requirements specified by NZS 3602 to minimise shrinkage and movement after the panels are fixed. Studs are not to exceed 600mm centres and nogs fitted flush at a maximum of 800mm centres. Wall underlay to comply with NZBC E2/AS1 Table 23.

3.6 EZPANEL SUBSTRATE

Do not commence work until openings and apertures have been cut, pipes, fixtures, fixing pads and plugs have been fixed and flashings and other preparations are complete. All defects in substrate must be rectified prior to application of plaster coatings. Ensure that backgrounds and adjoining surfaces are, after the preparation called for in this section, of **SCP's** required standard.

3.7 FLASHING AND DETAILING

Comply with NZBC E2/AS1, 4.0 **Flashings** and **SCP**'s penetration flashing guidelines. Carry out to the required standard of execution to ensure water does not penetrate.

3.8 CONFIRM LAYOUT

Before commencing work confirm the layout of expansion joints and other visual detailing of the finished work.

Application

3.9 PENETRATIONS

Confirm that exterior wall openings have been prepared ready for the installation of all window and door frames and other penetrations through the cladding. Required preparatory work includes the following:

- wall underlay to openings finished and dressed off with flexible flashing tape ready for the installation of window and door frames and other penetrations.
- installation of window and door joinery.
- installation of flashings (those required to be installed prior to installation of penetrating elements).
- where electrical cables pass through cladding, put into conduit to ensure that there is no direct contact with the polystyrene battens.
- windows must be installed so a gap of 23mm to 24mm is provided from the back of the joinery to the front of the timber framing.
- all penetrations such as water pipes, ducting, light fittings, must be installed with a minimum of 5° outward slope and be sealed to the wall underlay by the contractor who installed them.

3.10 FLASHING AND ACCESSORIES

Fit flashings to jambs, sills and heads on recessed joinery using the manufacturer proprietary flashings. Reinforce external corners and bottom edges of EZpanel with uPVC angles and channel extrusions glued to the EZpanel with Sika Nailbond PB adhesive.

3.11 CAVITY BASE BEAD

Where the EZpanel system is applied in a 'free-hanging' state the bottom edge of the EZpanels can be additionally supported by fixing a 50mm high backed uPVC base bead to the bottom wall plate.

3.12 POLYSTYRENE CAVITY BATTENS

Fix polystyrene battens full length to studs to achieve either a 20mm or a 40mm minimum thickness drained cavity to NZBC E2/AS1, 9.0 **Wall claddings**. The battens are fixed by the cladding fixings which will penetrate the wall framing studs over the wall underlay. Seal the top of the cavity. Install cavity closer/vermin proofing at base of wall, open horizontal (or raking) junctions, over openings (windows, meters etc). Horizontal cavity battens must be no longer than 100mm and fixed at a 5° slope. Fix additional battens to internal and external corners and around openings to **SCP**'s standard details.

3.13 FIXING EZPANELS OVER CAVITY BATTENS

Screw fix through the cavity battens into the wall framing to **SCP**'s details. EZpanels may be joined off stud but all sheet edges must be glued with Sabre Fix PU as the sheets are being installed prior to mesh coat being applied. All corners must be castellated and vertical sheet joins to be offset by a minimum of 150mm. Horizontal panel edges do not require edge fixing, except at soffits and at window and door openings where additional framing will be required. Anti-corrosionpaint must be applied to all exposed reinforcing in the panels.

3.14 SEALING SUBSTRATE

Seal the surface of the EZpanels properly prior to the application of any plaster. To seal the EZpanels, apply one good coat of undiluted Specialized EZpanel Resin over the entire surface of the dwelling and allow it to completely dry before plastering commences. Apply EZpanel resin with a pump up sprayer, long nap roller or wide paint brush at a spread rate of 10-12m² per litre. Failing to correctly prepare and seal the surface of the aerated concrete panels may cause delamination, chalking or failure in the base coat.

3.15 SILLS BALUSTRADES AND PARAPET TOPS

A minimum slope of 10° to all horizontal surfaces.

3.16 MOVEMENT CONTROL JOINTS

Incorporate in accordance with the design information supplied by **SCP**. Control joints to be constructed in the Ezpanel in accordance with the Technical Literature and must be provided horizontally at 6.4m centres and at inter-storey levels and vertically at 8m centres. Additional control joints will be required where the system abutments different cladding types, where cladding covers structural materials, and over a movement joint in the underlying framing. Confirm locations in writing to the owner before work commences.

Finishing - Cement Plaster

3.17 CEMENT PLASTER - FINE MESH COAT

Applied as a detailing base coat plaster at a minimum thickness of 2mm to 3mm. Embed fibreglass soft mesh into the wet plaster around all penetrations. Overlap each successive layer by 30mm minimum.

3.18 CEMENT PLASTER - EZPANEL BASE COAT

Apply in accordance with SCP requirements. Apply EZPanel Base Coat embedded with hard fibreglass mesh to all flat areas of wall. Drops of hard mesh do not have to overlap but should be tightly butt joined. If the mesh doesn't overlap then any butt join must be offset from vertical EZpanel joints by a minimum of 150mm. Where overlapped, overlap each successive length by 30mm minimum.

3.19 CEMENT PLASTER - STUCCO TEXTURE FINISH

Applied as a fine base coat plaster that can be sprayed through a hopper or sagola gun to achieve a heavy stucco texture finish.

3.20 CEMENT PLASTER - FLOAT FINISH

Trowel applied in two coats 1 - 2mm per layer over the mesh coat and polished flat to achieve a fine granular finish in accordance with **SCP** requirements.

3.21 CEMENT PLASTER - SPANISH FINISH

Trowel applied using SCP's recommended techniques in various thicknesses over the mesh coat to achieve an undulating style finish.

3.22 CEMENT PLASTER - FINE SPRAY TEXTURE FINISH

Applied over the base coat by sagola gun with a 7mm tip and with the compressor set at 60 psi, to achieve a fine stipple finish.

3.23 CEMENT PLASTER - GRANOPOR TOP 1.5MM ACRYLIC TEXTURE

Trowel applied and polished flat to achieve a fine granular finish in accordance with **SCP** requirements.

3.24 CEMENT PLASTER - GRANOPOR FINE 1.0MM ACRYLIC TEXTURE

Trowel applied and polished flat to achieve a fine granular finish or spray applied through a hopper gun or sagola gun to achieve a fine stippled finish in accordance with **SCP** requirements.

Finishing - Acrylic Plaster

3.25 ACRYLIC PLASTER - POWAFLEX BASE COAT

Apply in accordance with **SCP** requirements. Apply Powaflex embedded with hard fibreglass mesh to all flat areas of wall. Drops of hard mesh do not have to overlap but should be tightly butt joined. If the mesh doesn't overlap then any butt join must be offset from vertical EZpanel joints by a minimum of 150mm. Where overlapped, overlap each successive length by 30mm minimum.

3.26 ACRYLIC PLASTER - GRANOPOR TOP 1.5MM ACRYLIC TEXTURE

Trowel applied and polished flat to achieve a fine granular finish in accordance with **SCP** requirements.

3.27 ACRYLIC PLASTER - GRANOPOR FINE 1.0MM ACRYLIC TEXTURE

Trowel applied and polished flat to achieve a fine granular finish or spray applied through a hopper gun or sagola gun to achieve a fine stippled finish in accordance with **SCP** requirements.

Finishing - Paint

3.28 LIMESTOP PRIMER

As soon as the plaster finish is dry enough to accept the paint system apply one coat of Limestop in accordance with manufacturer requirements to ensure efflorescence does not form on the surface of the finished paint system.

3.29 PAINT FINISH

As soon as the acrylic plaster finish or the limestop primer over cement based plaster finish is dry enough to accept the paint system apply either Plastershield or a 100% latex acrylic based exterior paint system to the paint manufacturer requirements. Apply 2 coats minimum of the selected paint system tinted to the selected colour.

Completion

3.30 COMPLETION MATTERS

Refer to 1270 CONSTRUCTION for completion requirements and if required commissioning requirements.

4 SELECTIONS

Substitutions are not permitted to the following, unless stated otherwise.

4.1 EZPANEL

Size/thickness:	2200mm x 600mm x 50mm

4.2 CAVITY BATTENS

Polystyrene:	50mm x 21mm

4.3 PANEL ADHESIVE

Brand:	Sabre Fix PU adhesive

4.4 uPVC ADHESIVE

Brand:	Sika Nailbond PB adhesive or equivalent

4.5 REINFORCING MESH

Type:	Alkali-resistant fibreglass woven reinforcing mesh
Grade/weight:	160 g/m² with a 4mm x 4mm aperture

4.6 CEMENT PLASTER FINISH

If chosen by Client:

Fine mesh coat:	Specialized Fine Mesh Coat Plaster
Base coat:	Specialized EZPanel Base Coat Plaster
Finish texture coat:	TBC by client

4.7 ACRYLIC PLASTER FINISH

If chosen by Client:

Base coat:	Powaflex Acrylic plaster
Finish texture coat:	TBC by client

4.8 PAINT SYSTEM

Primer:	TBC
Paint system:	Plastershield
Top Coats:	2 coats
Paint colour:	TBC by client

4323G GERARD® STEEL TILE ROOFING

1 GENERAL

This section relates to Gerard® interlocking pressed Steel roofing tiles complete with underlay, battens and accessories.
It includes:

- Gerard® Steel roofing tiles
- Associated flashings and accessories

1.1 RELATED WORK

Refer to 4161P PAUL INDUSTRIES UNDERLAYS, FOIL AND DPC for underlays, foils and DPC
Refer to relevant timber framing section for timber battens

1.2 ABBREVIATIONS

Refer to the general section 1232 INTERPRETATION & DEFINITIONS for abbreviations used throughout the specification.

NZMRM	New Zealand Metal Roofing Manufacturers Inc

Documents

1.3 DOCUMENTS

Refer to the general section 1233 REFERENCED DOCUMENTS. The following documents are specifically referred to in this section:

NZBC B1/AS1	Structure
NZBC B2/AS1	Durability
NZBC E2/AS1	External moisture
NZBC G12/AS1	Water Supplies
AS 1397	Continuous hot-dip metallic coated steel sheet and strip – coatings of zinc and zinc alloyed with aluminium and magnesium
AS/NZS 4680	Hot dip galvanised coatings on fabricated ferrous articles – galvanising of nails
AS/NZS ISO9001	Quality management systems - requirements
NZS 2295	Pliable, permeable building underlays
NZS 3602	Timber and wood based products for use in building
NZS 3604	Timber-framed buildings
NZS 4217	Pressed metal tile roofs
NZMRM CoP	NZ Metal Roof and Wall Cladding Code of Practice

1.4 MANUFACTURER'S DOCUMENTS

Manufacturer's and supplier's documents relating to work in this section are:
Gerard – Brochures
Gerard – Specification manual
Gerard – Statement of Building Code Compliance
Gerard – Technical Note : "Aluminium Zinc Substrate performance"
Gerard – Technical Note :"Installation of Gerard Roofs in all wind zones including extra high wind zones"
Gerard – "Builders check-list"
AHI Roofing Ltd ISO 9001 Certificate
AHI Roofing Ltd ISO 14001 Certificate No. 188
NZGBC Certificate of Membership 2020-2021
Declare Certificate AHI 0001 Gerard Satin Tile expires 1st March 2021
Declare Certificate AHI 0002 Gerard Textured Tile expires 1st March 2021

Manufacturer/supplier contact details:

Company:	RoofTG Pacific Limited
Web:	www.gerardroofs.co.nz
Email:	info@gerardroofs.co.nz
Telephone:	0800 100 244

Warranties

1.5 WARRANTY - MANUFACTURER/SUPPLIER - STANDARD WARRANTY

Provide a material manufacturer/supplier warranty:

Textured Finish Roof

50 years, pro rata	For weatherproofing, with textured finish roof
20 years, pro rata	For surface coating, with textured finish roof

Smooth Finish Roof

50 years, pro rata	For weatherproofing, with Smooth finish roof
15 years, pro rata	For surface coating, with Smooth finish roof

- Provide this warranty on the manufacturer/supplier standard form (if not available then use the standard form in the general section 1237WA WARRANTY AGREEMENT)
- Commence the warranty from the date of practical completion of the contract works.

Refer to the general section 1237 WARRANTIES for additional requirements.

1.6 WARRANTY - INSTALLER /APPLICATOR

Provide an installer/applicator warranty:

5 years	For installation of roof

- Provide this warranty on the installer/applicator standard form (if not available then use the standard form in the general section 1237WA WARRANTY AGREEMENT)
- Commence the warranty from the date of practical completion of the contract works.

Refer to the general section 1237 WARRANTIES for additional requirements.

Requirements

1.7 QUALIFICATIONS

Installers to be experienced in installation of Gerard® roofing tiles and certified by Gerard®. If requested provide evidence of qualification / experience prior to commencing work.

1.8 NO SUBSTITUTIONS

Substitutions are not permitted to any specified Gerard® system, or associated components and products.

Compliance Information

1.9 INFORMATION REQUIRED FOR CODE COMPLIANCE

Provide the following compliance documentation:

- Applicators approval certificate from the manufacturer / importer / distributor
- Manufacturer's / suppliers warranty
- Installer's warranty
- Producer Statement - Construction from the applicator / installer

Performance - Wind

1.10 DESIGN PARAMETERS - NON SPECIFIC DESIGN

Building wind zone: High / 1.20 kPa ULS (refer to NZS 3604, table 5.4)

1.11 FIXINGS, WIND - NON SPECIFIC DESIGN

Design and use the fixings appropriate to Gerard® systems – Specification manual requirements and as appropriate for the project wind design stated above. To NZS 3604, table 10.12 Tile Battens for all Wind Zones. Refer to Gerard® – Specification manual & Technical Note:"Installation of Gerard Roofs in all wind zones including extra high wind zones" for the selected profile, fixing requirements.

Perforance - General

1.12 CO-ORDINATE

Co-ordinate to ensure substrate and preparatory work is complete and other work programmed in the order required for access and completion of the roof. Complete Gerard® – "Builders check-list."

1.13 PERFORMANCE

Accept responsibility for the weather-tight performance of the completed roofing system, including all penetrations through the roof and junctions with walls and parapets. Comply with NZMRM CoP, for performance, loadings, design, flashings, penetrations and installation recommendations, and section 15.3, **Pressed Steel Tiles**.

1.14 DRINKING WATER

Rainwater collected from correctly installed Gerard® systems will meet the provisions of NZBC G12/AS1.

2 PRODUCTS

Materials

2.1 UNDERLAY

Self supporting, kraft-based roofing underlay or self supporting, synthetic roofing underlay to comply with NZS 2295. Refer to 4161 UNDERLAYS, FOILS AND DPC for details.

2.2 BATTENS

To NZS 3604, 10.2.1.16 **Purlins and tile battens**. Radiata Pine or Douglas Fir, SG6, treated H1.2. Moisture content to NZS 3602, size, spacing and fixing to NZS 3604 table 10.12 **Tile Battens for all wind zones** or to Gerard® requirements for Wind -specific design.

2.3 PRESSED STEEL TILES

To NZS 4217, and NZBC E2/AS1, 8.3 Pressed Steel tiles. Aluminium/Zinc coated steel AZ 150, 0.39mm BMT to AS 1397. Tiles available in a range of profiles & may be finished either in a stone chip texture or Smooth acrylic finish. Refer to SELECTIONS for type.

Components

2.4 TILE FIXINGS

Hot-dipped galvanized steel flat head 50mm x 2.8mm painted tile nails to Gerard® specification.

2.5 BATTEN FIXINGS

90x3.15mm gun nails or self drilling screws in accordance with NZS 3604 table 10.12 Tile Battens for all wind zones and Gerard® - Technical Note:"Installation of Gerard Roofs in all wind zones including extra high wind zones".

2.6 FLASHINGS, CAPPINGS AND COVERS

To NZS E2/AS1, 4.0 **Flashings**. Gerard® proprietary ridge, hip, gable, valley & wall flashings, cappings and trims manufactured from aluminium-zinc coated steel AZ 150, to AS 1397, coated to match adjacent roofing where required, as part of the selected Gerard® profile's roofing system.

Accessories

2.7 SEALANT

Neutral cure silicone or MS sealant in accordance with Gerard® requirements.

2.8 TOUCH-UP KITS

Gerard® touch-up kits of base colour and stone chip texture for application over membrane roofing which overlaps panels.

3 EXECUTION

Conditions

3.1 STORAGE AND HANDLING

Take delivery of materials and goods and store on-site and protect from damage. Stack tiles on ground no more than two pallets high, on a level, hard base, ventilated and protected from damage and weather.
Protect finished surfaces, edges and corners from damage. Move/handle goods in accordance with manufacturer's requirements without soiling, scratching, crushing or other damage.
Reject and replace goods that are damaged or will not provide the required finish.

3.2 INSPECTION

Inspect the roof framing and supporting structure and do not start work until it is complete and fully braced ready for tiling, all to the requirements of NZS 3604 or specific design where required.
Ensure Gerard® – "Builders check-list" has been completed

3.3 COMPLY

Comply with the preparation, laying and fixing requirements of NZS 4217, NZBC E2/AS1 8.0 **Roof claddings**, and the Gerard® requirements where these are of a higher standard.

3.4 DISSIMILAR METALS / MATERIALS

Isolate dissimilar materials in close proximity as necessary by painting the surfaces or fitting separator strips of compatible or inert materials. Place isolators between metals and treated timber, cement based materials, and mixing aluminium sheet and steel mesh. Do not use unpainted lead sheet, copper or brass in contact with or allow water run-off onto galvanized or aluminium-zinc coated steel.
Ensure all fixings are compatible with the roof tile material.

Application

3.5 SET-OUT

Carefully set out the roof with a measuring rod to position the battens accurately taking account of rafter lengths, overhangs into gutters and spoutings and verge overhangs, all to minimise tile cutting. Batten setout in accordance with requirements for selected Gerard® profile.

3.6 LAY UNDERLAY

Roof underlay to be installed horizontally with a minimum 75mm overlap, all vertical laps to be taken past rafters and lap by a minimum of 150mm to NZBC E2/AS1: 8.1.5 **Underlays,** and Gerard® requirements. Roofing underlay is installed under the roofing battens but over the bottom batten over fascia into gutters, drawn tight over rafters from ridges and hips and into valleys.
If damaged, make good with full lap inserts as the work proceeds.

3.7 FIX BATTENS

To NZS 3604, table 10.12 and/or to Gerard® requirements for specific design wind loads. Fix battens over the underlays in straight courses, spanning at least 3 rafters, between fascia and ridge and elsewhere to Gerard® required details. Nail or screw as required at every crossing. Square cut ends to form butt joint over rafters with joints staggered.

3.8 FIX VALLEY

To NZBC E2/AS1: 8.1.6.2 **Valley Gutters & hidden gutters** and in accordance with Gerard® requirements. Valley overlaps to be at least 150mm, do not fix through valleys, tag top edge of valley join to eliminate valley creep.

3.9 LAYING

Do not take heavy equipment onto the roof. Plan work to minimise foot traffic. Work on the roof only using appropriate footwear. Interlock, lap and lay tiles to NZBC E2/AS1: 8.3 **Pressed Steel tiles**, and Gerard® requirements. Finish ridge, hip, valley, barge and eaves to Gerard® required details if not detailed elsewhere.

3.10 NAILING TILES

Nail tiles to battens generally through the upstand and downturn of the tile lap as well as all elements to Gerard® details and to NZBC E2/AS1.
Bottom course of tiles are fixed driving vertical nails into face of tile, and into eaves batten. Eaves nails to Smooth finish tiles are sealed with a synthetic washer, textured tiles to be sealed with the touch-up kit base coat and stone chip.
Successive rows of tiles are fixed driving 50mm Gerard® approved nails into the face of battens.

3.11 CUTTING AND BENDING

Cut, bend and straighten tiles neatly to finish true to line and plane when in place, using installation equipment maintained in the proper condition, all to NZS 4217 and to Gerard® details.

3.12 FIT FLASHINGS, COVERS AND CAPPINGS

Cut, fit and fix all elements true to line and plane, to NZBC E2/AS1: 4.0 **Flashings**, NZBC E2/AS1: 5.0 **Roof/wall junctions** in accordance with Gerard® requirements and the NZMRM CoP, section 15.3 **Pressed Steel Tiles**, if not detailed elsewhere.
Tiles must be turned up a minimum of 40mm and covered to prescribed cover by Gerard® factory produced flashings.

3.13 PENETRATIONS AND JUNCTIONS

Form to NZBC E2/AS1: 8.1.7 and 8.3.10 Roof penetrations, in accordance with Gerard® requirements and to the NZMRM CoP.

Check that adjoining walls and parapets are prepared ready for the installation of the roofing. Confirm that openings have been prepared ready for the installation of skylight, chimneys and other penetrations through the roof. Required work includes the following:

- underlay turned up at wall and parapet lines
- underlay finished and dressed off to all openings, ready for the installation of skylights and other penetrations
- roofing installation neatly finished to all sides of openings and to all wall and parapet junctions including proprietary Gerard® PVC stop ends.
- installation of flashings, either custom-made flashings made from Gerard® supplied sheet or a supported membrane flashing.
- install selected sealant between flashing and roofing tile to Gerard® requirements.
- where applicable, touch up membrane flashings where they overlap roofing tiles with Gerard® touch-up kit base coat and/or stone chip.

Completion

3.14 MAKE GOOD

Touch up all damaged coatings with Gerard® touch-up kit base coat and/or stone chip

3.15 LEAVE

Leave this work complete with all necessary flashings, valleys, ridges and hips all properly installed as the work proceeds so the finished roof is completely weathertight.

3.16 REMOVE

Remove trade rubbish and unused materials from the roof and surrounds regularly during the work. Sweep down the completed roof and clean out spoutings, gutters and rainwater pipes. Remove debris, unused materials and elements from the site.

4 SELECTIONS

For further details on selections go to https://designtech.gerardroofs.co.nz/DesignTech/
Substitutions are not permitted to the following, unless stated otherwise.

Materials

4.1 UNDERLAY

Refer to 4161P PAUL INDUSTRIES UNDERLAYS, FOILS AND DPC.

4.2 TIMBER BATTENS

Type:	Refer to relevant timber framing section for timber battens
Fixings:	S - 2/90 X 3.15mm gun nails

Roof tiles

4.3 GERARD® ASPEN ROOF TILE

Type:	Gerard® Aspen
Roof pitch:	25/17.5 degrees
Finish:	TBC by client
Colour:	TBC by client

Flashings

4.4 GERARD® PROPRIETARY FLASHINGS/CAPPINGS/TRIMS

Type:	Refer to drawings
Finish:	To match adjacent roofing
Colour:	To match adjacent roofing

Accessories

4.5 SEALANT

Type:	MS Sealant

4521 ALUMINIUM WINDOWS AND DOORS

1 GENERAL

This section relates to the manufacture, supply, and installation of:

- aluminium windows
- aluminium doors and frames
- hardware and furniture
- overhead glazing
- flashings

1.1 RELATED WORK

Refer to glazing sections for glass types

1.2 ABBREVIATIONS AND TERMS

SLS	Serviceability limit state
ULS	Ultimate limit state
WGANZ	Window & Glass Association NZ
PQAS	Powder Coating Quality Assurance System

Documents

1.3 DOCUMENTS

Refer to the general section 1233 REFERENCED DOCUMENTS. The following documents are specifically referred to in this section:

NZBC E2/AS1	External moisture
NZBC F4/AS1	Safety from falling
NZBC H1/VM1	Energy efficiency
NZBC H1/AS1	Energy efficiency
AS/NZS 1170.2	Structural design actions - Wind loads
NZS 1170.5	Structural design actions - Earthquake actions - New Zealand
AS/NZS 1580.108.1	Methods of test for paints and related materials - Determination of dry film thickness on metallic substrates - Non destructive methods
AS/NZS 1734	Aluminium and aluminium alloys - flat sheets, coiled sheet and plate
AS/NZS 1866	Aluminium and aluminium alloys - Extruded rod, bar, solid and hollow shapes
NZS 3604	Timber-framed buildings
AS 3715	Metal finishing - Thermoset powder coatings for architectural applications
NZS 4211	Specification for performance of windows
NZS 4223.3	Glazing in buildings - Human impact safety requirements
AS/NZS 4680	Hot-dip galvanized (zinc) coatings on fabricated ferrous articles
AAMA 2603	Voluntary specification, performance requirements, and test procedures for pigmented organic coatings on aluminium extrusions and panels (with coil coating appendix)
AAMA 2604	Voluntary specification, performance requirements and test procedures for high performance organic coatings on aluminium extrusions and panels.
AAMA 2605	Voluntary specification, performance requirements and test procedures for superior performing organic coatings on aluminium extrusions and panels.
BS 3900	Methods of tests for paints, Part C5: Determination of film thickness
BRANZ BU 636	Protecting Glass From Damage

Window & Glass Association NZ (WGANZ) documents:

Window Installation Guide	Guide to Window Installation as described in E2/AS1 Amendment 7
PQAS	Powder Coating Quality Assurance System
SFA 3503-03	Anodic Oxide coatings on wrought aluminium for external architectural application (2005)

US Federal Specification:

TT-S-001543A	Sealing compound, silicone rubber base (for caulking, sealing and glazing in buildings and other structures)
TT-S-00230C	Sealing compound, elastomeric type, single component (for caulking, sealing and glazing in buildings and other structures)

Warranties

1.4 WARRANTY - MANUFACTURER / SUPPLIER

Provide a material manufacturer/supplier warranty:
5 years: For fabrication
Refer to the general section for the required form of 1237WA WARRANTY AGREEMENT and details of when completed warranty must be submitted.

1.5 WARRANTY - INSTALLER / APPLICATOR

Provide an installer/applicator warranty:
2 years: For installation

- Provide this warranty in the installer/applicator standard form.

Refer to the general section 1237 WARRANTIES for additional requirements.

Requirements

1.6 QUALIFICATIONS

Work to be carried out by trades people experienced, competent and familiar with the materials and techniques specified.

1.7 COMPLIANCE

Windows and doors to be manufactured and installed to NZBC E2/AS1.

1.8 CERTIFICATION

Provide evidence of a certificate by a laboratory accredited by International Accreditation of New Zealand that the windows and doors offered comply with the requirements of NZS 4211.

Performance

1.9 PERFORMANCE - WINDOWS AND DOORS

To NZS 4211, including:

- deflection, opening sashes, air infiltration, water penetration, ultimate strength, torsional strength of sashes, marking.

Refer to SELECTIONS.

1.10 PERFORMANCE - STRUCTURAL/WEATHER-TIGHTNESS

The structural and weather-tight performance of the completed joinery, the glazing and infill panels is the responsibility of the window manufacturer.

Performance - Wind (design by contractor)

1.11 WIND - NON SPECIFIC DESIGN

Design the installation to the wind zone parameters of NZS 3604, table 5.4.
Refer to SELECTIONS for wind zone.

Finishes

1.12 CERTIFY COATINGS - POWDER COATING

Certify on request, compliance with this specification and support with control and sampling records. Test for film thickness to BS 3900, part C5, method No. 4, using method (b) or to AS/NZ 1580.108.1 for certifying thickness and method (a) where any dispute arises as to the thickness provided.
The coating should be applied by an applicator who can certify that the coating has been applied in accordance with the specification.

2 PRODUCTS

Materials

2.1 WINDOWS

Refer to SELECTIONS for type and finish.

2.2 DOORS

Refer to SELECTIONS for type and finish.

2.3 ALUMINIUM EXTRUSIONS

Alloy designation to comply with AS/NZS 1866. Branded and extruded for anodising or powder coating.

2.4 ALUMINIUM SHEET AND STRIP

Complying with AS/NZS 1734 of suitable thickness. Rolled for anodising or powder coating.
Alloy designation: 5251 - H16 or 5005 - H16

2.5 STAINLESS STEEL SHEET AND STRIP

Type: 316 austenitic steel
Finish grade: 2B (satin lustre)

2.6 GLASS

Refer to the glazing section for glass types and installation.

2.7 FLASHINGS GENERALLY

To NZBC E2/AS1, 9.1.10 **Windows and Doors**. Material, grade and colour of head flashings to match the window frames. Ensure that materials used for head, jamb and sill flashings are compatible with the window frame materials and fixings and cladding materials.

Components - for cavity systems

2.8 STANDARD CAVITY CLOSER

A perforated device constructed from either aluminium or PVC to close the cavity above the window or door unit, between the cladding and head flashing, to provide ventilation in accordance with NZBC E2/AS1 to the spaces above the window or door.

2.9 SUPPORT BAR

WGANZ extruded aluminium support bar with built in drainage and ventilation to NZBC E2/AS1, to provide continuous support to the window unit. Size to suit cladding type.

Components

2.10 GLAZING GASKETS

Thermoplastic rubber. Do not stretch glazing gaskets during installation. Measure and cut gaskets 5-10% over length before installation.

2.11 HARDWARE AND FURNITURE

Hinges, stays, catches, fasteners, latches, locks and furniture as offered by the window and door manufacturer. Refer to SELECTIONS for type and finish. Key alike all lockable window hardware able to be keyed alike.

2.12 SAFETY STAYS

Stainless steel non releasable restrictors to limit window opening to NZBC F4/AS1, Section 2.0, **Opening windows**.

Sealants

2.13 STRUCTURAL SEALANT

Silicone chemically curing sealant specifically formulated and tested or approved equivalent with not less than a ± 40% movement factor complying with US Federal Specification TT S 001543A.

2.14 WEATHERING / INSTALLATION SEALANT

Building sealant used in accordance with manufacturer's instructions for weather sealing aluminium frames to the cladding, complying with US Federal Specification TT S 0011534A, or a one-part polyurethane moisture curing, elastic joint sealant of medium modulus (± 25% movement) to US Federal Specification TT S 00230C.

2.15 FOAM TAPE

Foam tape to NZBC E2/AS1, 9.1.10.7 **Closed cell foam tape**.

Finishes

2.16 POWDER COATED ALUMINIUM - EXTRA-DURABLE POLYESTER

Polyester powder organic coating in accordance with WGANZ PQAS, AS 3715, and AAMA 2603

2.17 POWDER COATED ALUMINIUM - HIGH-DURABILITY POLYESTER

High-performance polyester powder coating in accordance with WGANZ PQAS , and AAMA 2604.

2.18 POWDER COATED ALUMINIUM - HIGH DURABILITY FLUOROPOLYMER

Very high-performance PVF2 fluoropolymer powder coating in accordance with WGANZ PQAS and AAMA 2605.

3 EXECUTION

Conditions - generally

3.1 DO NOT DELIVER

Do not deliver to site any elements which cannot be unloaded immediately into suitable conditions of storage.

3.2 UNLOAD WINDOW JOINERY

Unload, handle and store elements in accordance with the window manufacturer's requirements.

3.3 AVOID DISTORTION

Avoid distortion of elements during transit, storage and handling.

3.4 PREVENT DAMAGE

Prevent prefinished surfaces rubbing together, and contact with mud, plaster and cement. Keep paper and cardboard wrappings dry.

3.5 PROPRIETARY ELEMENTS

Fix in accordance with the window manufacturer's requirements.

3.6 PROTECTIVE COVERINGS

Retain protective coverings and coatings to BRANZ BU 636 and keep in place during the fixing process. Provide protective coverings and coatings where required to prevent marking of surfaces visible in the completed work and to protect aluminium joinery from following trades. Remove protection on completion.

3.7 ADDITIONAL PROTECTION

Supply and fix additional protection as necessary to prevent marking of surfaces which will be visible on completed work.

Conditions - fixings and fastenings

3.8 SUPPLY OF FIXINGS

Use only fixings and fastenings recommended by the manufacturer of the component being fixed and to comply with the ULS wind pressure stated in SELECTIONS. Ensure fixings and fastenings exposed to the weather are of aluminium, or Type 316 stainless steel or if not exposed to the weather may they be hot-dip galvanized steel with a coating weight of 610 g/m² complying with AS/NZS 4680.

3.9 INSTALLATION FIXING

To NZBC E2/AS1, 9.1.10.8, **Attachments for windows and doors**. Fix windows/doors through reveal to frame with a pair of 75 x 3.15mm minimum galvanised jolt head nails or a pair of 8 gauge x 65mm minimum stainless steel screws. Fix at a maximum of 450 centres along all reveals and a maximum of 150mm from reveal ends. Ensure fixings do not penetrate metal flashings.
Install packers between reveals and framing at fixing points, except at the head.

Assembly

3.10 FABRICATION

Fabricate frames as detailed on shop drawings. Install glazing, hinges, stays and running gear as scheduled. Provide temporary bracing and protection. Temporarily secure all opening elements for transportation.

3.11 TIMBER / PVC REVEALS

Before fixing to aluminium frames, ensure that timber reveals which are being painted have been primed on all surfaces.

3.12 HARDWARE GENERALLY

Factory fit all required and scheduled hardware. Account for all keys and deliver separately to the site manager.

3.13 SAFETY STAYS

Factory fit safety stays to all windows scheduled for safety stays and to all windows where safety stays are required to comply with NZBC F4/AS1 4.0, Opening windows.

Installation - windows and doors

3.14 CORROSION PROTECTION

Before fixing, apply suitable barriers of bituminous coatings, stops or underlays between dissimilar metals in contact, or between aluminium in contact with concrete.

3.15 CONFIRM PREPARATION OF EXTERIOR WALL OPENINGS

Confirm that exterior wall openings have been prepared ready for the installation of all window and door frames. Do not proceed with the window and door installation until required preparatory work has been completed.

Required preparatory work includes the following:

- wall underlay/building wrap to openings finished and dressed off ready for the installation of window and door frames to NZBC E2/AS1:9.1.5 **Wall underlays to wall openings**.
- Full height 20mm jamb battens to NZBC E2/AS1 figure 72A (direct fix only)
- claddings neatly finished off to all sides of openings
- installation of flashings (those which are required to be installed prior to frames).

3.16 INSTALLATION

Fix to comply with the reviewed shop drawings and installation details including flashings and bedding compounds, pointing sealants and weathering sealants.

3.17 INSTALLATION CAVITY CONSTRUCTION

Install to WGANZ Window Installation Guide details and drawings including WGANZ sill support bars.
For thresholds with support bars fixed through membranes, pre-fill support bar screw holes with silicone sealant to NZBC E2/AS1, figure 62(d).

3.18 INSTALL FLASHINGS

Install flashings to heads, jambs and sills of frames as supplied and required by the window manufacturer and as detailed on the drawings. Finish head flashings to match window finish.

Place all flashings so that the head flashing weathers the jamb flashings, which in turn weathers over the upstand of the sill flashing. Ensure that sill flashings drain to the outside air.

Except where window/door frames are recessed, ensure that head flashings over-sail unit by 20mm minimum plus any jamb scriber width at each end.

3.19 COMPLETE AIR SEAL

To NZBC E2/AS1:9.1.6 Air seals. Form an air-tight seal by means of a proprietary expanding foam or sealants used with backing rods, applied between the window / door reveal and structural framing to a depth of 10 - 20mm, to provide a continuous air tight seal to the perimeter of the window or door.

3.20 FIX HARDWARE

Fix all sash and door hardware and furniture as scheduled.

Application - jointing and sealing

3.21 SEAL FRAMES ON SITE

Seal frames to each other and to adjoining structure and finishes, all as required by the window manufacturer and to make the installation weathertight. In very high and extra high or greater wind zones, seal between the window head and the head flashing. Do not seal the junction between the sill member and the cladding or sill flashing which must remain open.

3.22 PREPARE JOINTS

Ensure joints are dry. Remove loose material, dust and grease. Prepare joints in accordance with the sealant manufacturer's requirements, using required solvents and primers where necessary. Mask adjoining surfaces which would be difficult to clean if smeared with sealant.

3.23 BACK UP

When using back-up materials do not reduce depth of joint for sealant to less than the minimum required by the manufacturer of the sealant. Insert polyethylene rod or tape back-up behind joints being pointed with sealant.

3.24 SEALANT FINISH

Tool sealant to form a smooth fillet with a profile and dimensions required by the sealant manufacturer. Remove excess sealant from adjoining surfaces, using the cleaning materials nominated by the sealant manufacturer and leave clean.

Completion - cleaning

3.25 REMOVE TRADE DEBRIS

Remove trade debris by appropriate means on a floor by floor basis as each floor is completed and again before any work is covered up by others. Arrange for general removal.

3.26 TRADE CLEAN

Trade clean window frames, operable windows and doors, glass and other related surfaces inside and out at the time of installation to remove marks, dust and dirt, to enable a visual inspection of all surfaces.

Completion

3.27 PROTECTIVE COVERINGS

Retain protective coverings and coatings and keep in place during the fixing process. Provide protective coverings and coatings where required to prevent marking of surfaces visible in the completed work and to protect aluminium joinery from following trades.

3.28 SAFETY

Indicate the presence of transparent glasses for the remainder of the contract period, with whiting, tape or signs compatible with the glass type. Indicators other than whiting must not be applied to the glass surface. Masking tape must not be used for this purpose.

3.29 IN SITU TOUCH-UP TO POWDER COATED ALUMINIUM

In situ touch-up of polyester or fluoropolymer coated aluminium is only permitted only to minor surface scratching. Otherwise replace all damaged material.

3.30 REMOVE

At the appropriate stage of the project, remove safety indicators and protective coverings and wipe down all joinery thoroughly.

3.31 REPLACE

Replace damaged, cracked or marked elements.

4 SELECTIONS

Performance

4.1 THERMAL PERFORMANCE

R-value:	0.26 (as determined from NZBC H1/VM1 or H1/AS1)

Performance - Wind (design by contractor)

4.2 WIND - NON SPECIFIC DESIGN

Building wind zone	H (refer to NZS 3604, table 5.4)

Window and door system

4.3 ALUMINIUM WINDOWS

Manufacturer:	Refer to Client Specifications
Type/location:	Refer to sheet 801

4.4 ALUMINIUM DOORS

Manufacturer:	Refer to Client Specifications
Type/location:	Refer to sheet 801

Finishes

4.5 FLASHINGS

Material/type: Aluminium
Pattern: Formed to suit details provided

4.6 HARDWARE

Refer to Client Specifications

4610 GLAZING RESIDENTIAL

1 GENERAL

This section relates to the supply and fixing of glass products for external and internal joinery in residential type buildings and includes:

- windows and doors
- frameless shower and bath screens
- splashbacks, wall linings
- balustrade systems, pool fences
- mirrors and mirror frames

1.1 RELATED WORK

Refer to 4521AR APL Residential Aluminium Windows & Doors

1.2 ABBREVIATIONS AND DEFINITIONS

Refer to the general section 1232 INTERPRETATION & DEFINITIONS for abbreviations and definitions used throughout the specification.

The following abbreviations apply specifically to this section:

PVB	Polyvinyl Butyral
CIP	Cast in place

Documents

1.3 DOCUMENTS

Refer to the general section 1233 REFERENCED DOCUMENTS. The following documents are specifically referred to in this section:

NZBC F4/AS1	Safety from falling
NZBC F9/AS1	Means of restricting access to residential pools
NZBC H1/AS1	Energy Efficiency
AS/NZS 1170.2	Structural design actions - Wind loads
NZS 3604	Timber-framed buildings
NZS 4211	Specification for performance of windows
NZS 4218	Thermal insulation - Housing and Small Buildings
NZS 4223.1	Glazing in buildings - Glass selection and glazing
NZS 4223.Supp1	Glazing in buildings - Supplement 1 to NZS 4223.1:2008 and NZS 4223.4:2008
NZS 4223.2	Glazing in buildings - Insulating glass units
NZS 4223.3	Glazing in buildings - Human impact safety requirements
NZS 4223.4	Glazing in buildings - Wind, dead, snow and live action
AS/NZS 2208	Safety glazing materials in buildings
AS/NZS 4666	Insulating glass units
BRANZ BU 636	Protecting Glass From Damage

Warranties

1.4 WARRANTY - MANUFACTURER/SUPPLIER

Warrant glass under normal environmental and use conditions against failure of materials.

10 years:	for insulating glass units
10 years:	for laminated glass
10 years:	for toughened glass

Refer to the general section for the required form of 1237WA WARRANTY AGREEMENT and details of when completed warranty must be submitted.

Performance

1.5 ENERGY EFFICIENCY

Provide glazing to meet the energy requirements of NZS 4218 and NZBC H1/AS1 for housing small buildings.
Refer to SELECTIONS and schedules for location and type of glazing.

2 PRODUCTS

Materials

2.1 CLEAR FLOAT GLASS

Clear ordinary annealed transparent float glass for general window glazing. Thickness to NZS 4223.1 and NZS 4223. Supp 1.

2.2 TEXTURED, PATTERNED OR OBSCURE GLASS

Translucent, annealed, rolled glass with a decorative pattern on one surface.

2.3 LAMINATED GLASS

Grade A Safety Glass to AS/NZS 2208 with PVB or CIP resin interlayer.

2.4 TOUGHENED GLASS

Grade A Safety Glass to AS/NZS 2208.
Heat soaked toughened glass to NZS 4223.1, Appendix E required for critical areas.
Refer to SELECTIONS.

2.5 INSULATING GLASS UNITS (IGU'S)

To AS/NZS 4666, NZS 4223.2 and the IGU Manufacturers Association (IGUMA) requirements.
Marking to NZS 4223.2 as modified by NZBC B2/AS1, 3.5.

Materials, mirrors

2.6 MIRROR GLASS

Clear annealed mirror float glass, including silver, activation, passivation and two protective coats.

Materials, screens

2.7 GLASS SCREENS SHOWER & BATH

Proprietary shower / bath screens, formed to shape before toughening, complete with matching hardware.

Components, aluminium and uPVC glazing

2.8 GLAZING TAPE AND GASKETS

Single/double sided pressure sensitive self-adhesive low/medium/high density foam tapes/butyl tapes selected to suit the glazing detail to window manufacturers' requirements.

2.9 SETTING BLOCKS

Santoprene/Neoprene, 80-90 Shore A hardness, set at quarter points or to detail, to support the weight of glass panes.

Components, wall mounted glass (mirrors and splashbacks)

2.10 GLASS ADHESIVE

Adhesive mirror-mastic and double-sided adhesive tape.

3 EXECUTION

Conditions

3.1 GENERAL REQUIREMENTS

To NZS 4223.1, NZS 4223.3, NZS 4223.4. All external glazing to be wind and watertight on completion.

3.2 DELIVERY

Keep glass dry and clean during delivery and bring on to site when ready to glaze directly into place. Comply also with the storage requirements set out in BRANZ BU 636.

3.3 GLASS CONDITION

All glass to have undamaged edges and surfaces.

3.4 GLASS THICKNESS

If not specifically stated in the glazing schedule determine the minimum thickness of glass for each sheet as required by NZS 4223.1, NZS 4223.3, NZS 4223.4 and NZS 4223. Supp 1. For windows tested to NZS 4211, ensure glass meets the requirements of the window testing.
Determine the final glass thickness based on whether wind loading or human impact considerations govern.

3.5 REBATE DIMENSIONS

Provide rebates for glazing to the widths and depths necessary for each situation including minimum glass edge cover to NZS 4223.1, Section 4 Glazing.

3.6 JOINTING, PUTTY AND SEALING MATERIAL COMPATIBILITY

Ensure jointing, putty and sealing materials are compatible with glass substrates. Confirm compatibility with laminated glass, IGUs and coatings.

Conditions - human impact safety requirements

3.7 SAFETY GLAZING, GENERAL REQUIREMENTS

Glazing of doors, side panels, low level and window seat glazing, bathrooms, stairwell landings and similar locations, to NZS 4223.3 for thickness and maximum areas of safety glass.

3.8 SAFETY GLAZING MATERIAL

Use only safety glazing materials defined in NZS 4223.3, that also comply with the relevant requirements of AS/NZS 2208. Ensure material is permanently marked and if cut by the distributor or installer mark each piece to NZS 4223.3, 2.8 Identification.

3.9 CONTAINMENT

Edge cover to comply with NZS 4223.1, Section 4 Glazing, table 5. Otherwise to NZS 4223.3, 2.3 Edge cover.

Assembly

3.10 WORKING OF GLASS

All working of glass as required in NZS 4223.1.

3.11 EDGE WORK AND BEVELLING

Edgework other than a clean cut. Refer to SELECTIONS/drawings for type.

3.12 SURFACE TREATMENT

Refer to SELECTIONS/drawings for finish.

3.13 SURFACE CUTTING

Refer to SELECTIONS/drawings for finish.

3.14 INSTALL SAFETY GLASS

To NZS 4223.3.

Application aluminium

3.15 INSTALL GLASS TO ALUMINIUM FRAMES

Install glass to NZS4223.1.

- Bead glaze to Section 4 Glazing.
- Channel glaze to Section 4 Glazing, and Section 5 for Framed, Unframed, Partly Framed Glass Assemblies.

Application - wall mounted glass (mirrors and splashbacks)

3.16 WALL MOUNTED GLASS, SCREW FIXED

For mirrors and splashbacks, fix with proprietary zinc-plated steel countersunk-head screws, fitted with black neoprene washers with fine-threaded upstands to receive chrome plated dome screw covers.

3.17 WALL MOUNTED GLASS, ADHESIVE FIXED

For mirrors and splashbacks, fix with adhesive mirror-mastic and double-sided adhesive tape. Adhesive area 0.2 m2 per 1 m2 of glass to NZS 4223.3.

Application miscellaneous

3.18 INSTALL GLASS SHOWER & BATH SCREENS

Install shower and bath screens and doors to manufacturer's requirements.

Finishing

3.19 SAFETY

Indicate the presence of transparent glass for the remainder of the construction period, with whiting, tape or signs compatible with the glass type.

Completion

3.20 TRADE CLEAN

Clean off or remove safety indicators at completion of the building.

3.21 REPLACE

Replace damaged, cracked or marked glass.

3.22 LEAVE

Leave work to the standard required by following procedures.

3.23 REMOVE

Remove debris, unused materials and elements from the site.

4 SELECTIONS

Performance - wind

4.1 WIND ZONE - NON-SPECIFIC DESIGN

Building wind zone: H (as determined from NZS 3604, NZS 4223.4)

Glass by type

4.2 CLEAR FLOAT GLASS

Refer to Manufacturer Specifications.

4.3 TEXTURED, PATTERNED OR OBSCURE GLASS

Refer to Manufacturer Specifications and drawings.

4.4 TOUGHENED GLASS

Refer to Manufacturer Specifications and drawings.

4.5 INSULATING GLASS UNITS (IGU'S)

Refer to Manufacturer Specifications and drawings.

Mirrors

4.6 MIRROR

Refer to Manufacturer and Client Specifications.

Splashbacks

4.7 SPLASHBACKS

Refer to Manufacturer and Client Specifications.

Bath and shower screens and doors

4.8 FRAMELESS GLASS SHOWER SCREENS AND DOORS

Refer to Manufacturer and Client Specifications.

4710EW EARTHWOOL® GLASSWOOL INSULATION

1 GENERAL

This section relates to **Earthwool® glasswool** thermal and acoustic insulation systems including installation.
It includes:
Earthwool® glasswool insulation

- Earthwool® glasswool insulation: Underfloor Rolls with wind wash barrier
- Earthwool® glasswool insulation: Underfloor Quilted Batts with wind wash barrier
- Earthwool® glasswool insulation: External Wall Batts
- Earthwool® glasswool insulation: Internal Wall Batts
- Earthwool® glasswool insulation: Ceiling Batts
- Earthwool® glasswool insulation: Roof blankets

1.1 RELATED WORK

Refer to 3820 Carpentry

1.2 ABBREVIATIONS AND DEFINITIONS

Refer to the general section 1232 INTERPRETATION & DEFINITIONS for abbreviations and definitions used throughout the specification.

Documents

1.3 DOCUMENTS

Refer to the general section 1233 REFERENCED DOCUMENTS. The following documents are specifically referred to in this section:

NZBC C/AS1-C/AS2	Protection from fire
NZBC H1/AS1	Energy efficiency
NZBC H1/VM1	Energy efficiency
AS/NZS 3000	Electrical installations (Australian/New Zealand Wiring Rules)
AS/NZS 4859.1:2002	Materials for the thermal insulation of buildings - General criteria and technical provisions
AS/NZS 5110	Recessed Luminaire Barriers
AS/NZS 60695.11.5	Fire hazard testing - Test flames - Needle-flame test method - Apparatus, conformity test arrangement and guidance
NZS 4214	Methods of determining the total thermal resistance of parts of buildings
NZS 4218	Thermal insulation - Housing and small buildings
NZS 4220	Code of Practice for energy conservation in non-residential buildings
NZS 4246	Energy efficiency - Installing bulk thermal insulation in residential buildings

Documents listed above and cited in the clauses that follow are part of this specification. However, this specification takes precedence in the event of it being at variance with the cited document.

1.4 MANUFACTURER/SUPPLIER DOCUMENTS

Manufacturer and supplier documents relating to this part of the work:
BRANZ Appraisal 648 - Earthwool® glasswool Insulation
BRANZ Appraisal 975 - Earthwool® glasswool insulation: quilted underfloor batt.

CodeMark	GM-CM30095-RevA1 Refer to conditions and limitations listed in the CodeMark. Refer to CODEMARK CERTIFICATE for a list of Product datasheets and installation instructions
GreenTag	KNI-001-v2-2016

Manufacturer/supplier contact details

Company:	Knauf Insulation New Zealand
Web:	www.knaufinsulation.co.nz
Email (Technical):	tech.nz@knaufinsulation.com
Email (Sales):	sales.nz@knaufinsulation.com
Telephone:	0800 KNAUFI (562 834)

Warranties

1.5 WARRANTY

Provide a warranty for:

50 years:	For unfaced Earthwool® glasswool insulation materials
15 years:	For Earthwool® glasswool insulation underfloor

- Provide this warranty on the manufacturer/supplier standard form (if not available then use the standard form in the general section 1237WA WARRANTY AGREEMENT)
- Commence the warranty from the date of practical completion of the contract works.

Refer to the general section 1237 WARRANTIES for additional requirements.

1.6 WARRANTY - INSTALLER/APPLICATOR

Provide an installer/applicator warranty:
For installation of insulation

- Provide this warranty on the installer/applicator standard form (if not available then use the standard form in the general section 1237WA WARRANTY AGREEMENT).
- Commence the warranty from the date of practical completion of the contract works.

Refer to the general section 1237 WARRANTIES for additional requirements.

Requirements

1.7 QUALIFICATIONS - GENERAL

Refer to 1270 CONSTRUCTION for requirements relating to experience, skill, and qualifications.

1.8 NO SUBSTITUTIONS

Substitutions are not permitted to any of the specified systems, components and associated products listed in this section.

Performance - thermal insulation

1.9 R-VALUE RATING

Refer to SELECTIONS for location, type, R-Value, and thickness.

Performance - acoustic insulation

1.10 SOUND RATING REQUIREMENTS

Provide sound rated systems as detailed in SELECTIONS.

Performance - Fire properties

1.11 FIRE PROPERTIES

Earthwool® glasswool insulation is non-combustible to test criteria under the 30's Needle Flame Test to AS/NZS 60695.11.5.

Compliance

1.12 CODEMARK CERTIFICATE

Earthwool® glasswool meets the requirements of the NZBC when used in accordance with the conditions and limitations of its Certificate of Conformity. Refer to MANUFACTURER/SUPPLIER DOCUMENTS for CodeMark certificate.
The following Earthwool® glasswool Product Datasheets and Installation Instructions are listed in the CodeMark conditions and limitations:

- Acoustic:	Product datasheet ref: KINZ0914116DS, January 2017
- Ceiling batts:	Product datasheet ref: KINZ1213029DS, April 2017
- Ceiling Roll:	Product datasheet ref: KINZ0914115DS, January 2017
- Underfloor Roll:	Product datasheet ref: KINZ0616380DS, June 2016
- Wall:	Product datasheet ref: KINZ00914114DS, January 2017
- Multi-Use roll:	Product datasheet ref: KINZ0616396DS, June 2017
- Quilted underfloor batt:	Product datasheets ref KINZ0317511DS, August 2017
- Ceiling batt:	Installation instructions, ref: KINZ1017631MIS
- Ceiling Rolls:	Installation instructions, ref: KINZ1017632MIS
- Quilted Underfloor batt:	Installation instructions, ref: KINZ0817602MIS
- Underfloor Roll:	Installation instructions, ref: KINZ1017636MIS
- Wall batts:	Installation instructions, ref: KINZ1017633MIS

2 PRODUCTS

Materials - Underfloor Thermal Insulation

Materials - External Wall Thermal Insulation

2.1 EARTHWOOL® GLASSWOOL INSULATION: WALL BATTS

A rectangular batt to NZBC H1/AS1, AS/NZS 4859.1:2002. Made using recycled glass and with ECOSE® Technology, it is suitable for thermal applications.
Refer to SELECTIONS for options.

Materials - Internal Wall Acoustic Insulation

2.2 EARTHWOOL® GLASSWOOL INSULATION: WALL BATTS

A rectangular batt to NZBC H1/AS1, AS/NZS 4859.1:2002. Made using recycled glass and with ECOSE® Technology, it is suitable for acoustic applications.
Refer to SELECTIONS for options.

Materials - Ceiling Thermal Insulation

2.3 EARTHWOOL® GLASSWOOL INSULATION: CEILING BATTS

A rectangular batt to NZBC H1/AS1, AS/NZS 4859.1:2002. Made using recycled glass and with ECOSE® Technology, it is suitable for thermal and acoustic applications.
Refer to SELECTIONS for options.

2.4 EARTHWOOL® GLASSWOOL INSULATION: CEILING ROLLS

An insulation roll to NZBC H1/AS1, AS/NZS 4859.1:2002. Made using recycled glass and with ECOSE® Technology, it is suitable for thermal and acoustic applications.
Refer to SELECTIONS for options.

2.5 EARTHWOOL® GLASSWOOL INSULATION: ROOF BLANKET

A rectangular batt to NZBC H1/AS1, AS/NZS 4859.1:2002. Made using recycled glass and with ECOSE® Technology, it is suitable for thermal and acoustic applications.
Refer to SELECTIONS for options.

Components

2.6 TAPES:

Polypropylene or similar strapping stapled across framing to retain insulation in wall and ceiling applications.

2.7
EARTHWOOL® GLASSWOOL INSULATION: QUILTED UNDERFLOOR BATTS WITH WIND-WASH BARRIER

Quilted Underfloor is a rectangular batt to NZBC H1/AS1, AS/NZS 4859.1:2002. Made using recycled glass and with ECOSE® Technology, the underfloor batt is completely wrapped in a breathable plastic film, providing a wind-wash barrier.
Refer to SELECTIONS for options.

3 EXECUTION

Conditions

3.1 DELIVERY, STORAGE & HANDLING OF PRODUCTS

Refer to 1270 CONSTRUCTION for requirements relating to delivery. Storage and handling of products.

Do not use damaged or wet insulation material.

3.2 HAZARD & RISK MANAGEMENT

To Health and Safety at Work Act 2015 and take all safety precautions necessary to reduce potential hazards and risks. Refer also to NZS 4246, Appendix B. - Health and Safety.

3.3 ROUTINE MATTERS

Refer to 1250 TEMPORARY WORKS & SERVICES for protection requirements.
Refer to 1270 CONSTRUCTION for requirements relating to defective or damaged work, removal of protection and cleaning.

The building envelope must be maintained to a weathertight condition to ensure the insulation remains dry. Cavities must be clean and dry before fitting insulation.

3.4 PRE-INSTALLATION REQUIREMENTS

Check work previously carried out and confirm it is of the required standard for this part of the work.

Moisture content:	18% maximum for framing
Location and framing:	are free from moisture, that the cavities are not interconnected.
Insulation re-loft	Allow to re-loft/relax to specified thickness.
Discard	Damaged or wet insulation
Underlays	Ensure roof and wall underlays are installed, dry, clean, undamaged and free of debris before being covered with insulation
Vapour Barriers	Ensure vapour barrier forms one homogeneous sheet

Installation

3.5 INSTALLATION - GENERAL

Lay, install, fit and fix to NZBC H1/AS1: Energy efficiency, 2.0 Building thermal envelope, and to manufacturer requirements. Install in housing to NZS 4218 and NZS 4246. Do not cover vents. Allow a clear gap around metal flues as recommended by the fireplace manufacturer. Refer to manufacturer installation instructions and NZS 4246 for further details.

3.6 RECESSED LIGHT FITTING CLEARANCES - RESIDENTIAL

Residential recessed light fittings to AS/NZS 3000, 4.5.2.3.5;
- Existing fittings or retrofit situations, fittings maybe unmarked
- New fittings can only be labelled - CA 80, CA 90, CA 135, IC, IC-F & IC-4

Refer to clause INSULATION CLEARANCES GENERALLY for clearances.

3.7 INSULATION CLEARANCES FROM HEAT SOURCES - GENERAL

Insulation may need to have a gap to some mechanical and electrical services and equipment, including ducts and chimneys. The gaps should be to the NZS 4246 based tables below or to the equipment manufacturer requirements if they require larger gaps. Smaller gaps to manufacturer requirements can be used for equipment specifically manufactured with heat shielding or similar (excludes light fittings). Installed gap not to be more than 50mm bigger than the required gap. The following tables are subject to:

- The requirements of NZS 4246.
- The insulation is exposed to the source of heat or equipment etc.
- Insulation, has passed the needle flame test to AS/NZS 60695.11.5 and/or is non-combustible.
- Gaps to hot surfaces may have to be increased with non-compliant insulation and plastic/polymeric type insulation (EPS, XPS, PIR, etc), check with insulation manufacturer.
- Gaps to hot surfaces may be able to be reduced with non-combustible insulation, check with equipment manufacturer.
- "Secure insulation" if required means, glue, mechanical fix, or provide fixed barriers at gap edge of insulation to hold in place. Rigid or semi rigid insulation may only need a firm friction fit (secure loose pieces).

INSULATION CLEARANCES FROM RECESSED LIGHT FITTINGS

Type of fitting	**Minimum insulation clearance**	**Comments**
Recessed, marked NON-IC, or unmarked	100mm(increase if over 100W)	NON-IC fittings and new or old unmarked & unknown fittings, and/or insulation. Secure insulation.
Recessed, CA 80, CA 90 or CA 135	Abut fittings	Do NOT cover the fittings
Recessed, IC, IC-F or IC-4	Abut & cover fittings	Ensure insulation complies
Recessed, marked Do-Not-Cover	Manufacturers clearances	Do not cover the fittings
Independent control gear	Place on top of insulation and 50mm from fitting	If not on top allow 50mm clearance to insulation, do not cover. Includes, transformers, ballasts & drivers etc. Maintain clearance by placing guard around control gear, refer to NZS 4246 figure 15.
Surface fittings not exposed to insulation	Nil	Where surface fittings are isolated from insulation by appropriate linings. Excludes high heat fittings.
Surface fittings & exposed insulation	200mm	This is exposed insulation to any part of the exposed fitting & bulb/tube (e.g. exposed light in an unlined basement). Secure insulation.

FOR MINIMUM INSULATION CLEARANCES TO INBUILT RECESSED HOT APPLIANCES - REFER TO NZS 4246

INSULATION CLEARANCES FROM EXTRACTS, VENTS, PIPES & ROOF UNDERLAY

Application	Minimum insulation clearance	Comments
Ducted fan motors	50mm	Includes ducted rangehoods, extractors etc. Applies to the motor unit and electrical enclosures (not the ducts).
Ducted fan ducts	Abut	Excludes motor unit and electrical enclosures.
Unducted fan motors usually discharging to ceiling space	200mm	Includes unducted, rangehoods, extractors etc, discharging into roof space. To prevent debris falling into motor. Clearance may be able to be reduced, by providing a fixed barrier around the vent.
Passive vents (still in use)	200mm	To prevent debris falling through. Clearance may be able to be reduced, with more cohesive insulation, like some of the rigid plastic types or providing a fixed barrier around the vent.
Plumbing penetrations through floors	100mm	Keep gap between pipe penetration and floor insulation in case of leaks.
Roofing material/underlay	25mm	From underside of roofing or flexible roofing underlay, to prevent wicking.

Installation - Wall Framing

3.8 TIMBER FRAMING

Friction fit wall batt between framing members and linings. Cut on site to fill cavity and provide a close even fit. When cutting to fill a void, oversize by up to 10mm to ensure a tight fit. Ensure there is a friction fit on all faces of the insulation. If cavity depth is greater than the insulation nominal thickness, fix or strap the product to secure in accordance with installation instructions. Cut into smaller pieces for smaller spaces and around penetrations to achieve efficient thermal performance. Do not fold, tuck or compress the insulation. Refer to NZS 4246 for installation guidelines and Earthwool® glasswool insulation Product Data sheets listed in the CodeMark, for detailed installation instructions.

Installation - Ceilings/Skillion Roofs/Membrane Roofs and Below Decks.

3.9 SINGLE LAYER BATTS - BETWEEN CEILING FRAMING

Friction fit insulation between framing members. Cut across the roll to fit nogs and small spaces around penetrations. Leave no gaps and maintain full thickness of insulation over the whole of the installation. Leave gap around metal flues to the manufacturer requirements.

3.10 CEILING INSULATION EDGE DETAIL

Where perimeter of ceiling space is too low to allow full depth of insulation plus the 25mm air gap to the underlay, provide reduced perimeter insulation to NZS 4246.6.2 and maintain the 25mm gap.

3.11 BELOW MEMBRANE ROOFS AND DECKS - INSULATION CLEARANCES

Friction fit insulation between joists/rafters. Use a sharp craft knife to cut to required size or around penetrations if required. Maintain a minimum clearance of 20mm between the underside of the substrate (plywood etc) and any insulation to NZBC E2/AS1 clause 8.5.2

Installation - acoustic insulation

3.12 ACOUSTIC INSULATION - BATTS AND ROLLS

Friction fit batt, or roll, in place to completely fill the whole of the cavities, after the wall lining is fixed to one side of the partition. Slightly oversize to retain friction fit. Keep clean and undamaged until closed in. Close in as soon as possible after fixing.

Completion & Commissioning

3.13 COMPLETION MATTERS

Refer to 1270 CONSTRUCTION for completion requirements and if required commissioning requirements.
Earthwool® glasswool insulation packaging is recyclable.

4 SELECTIONS

For further details on selections go to www.knaufinsulation.co.nz
Substitutions are not permitted to the following, unless stated otherwise.

External Wall - Thermal Insulation

4.1 EARTHWOOL® GLASSWOOL INSULATION: EXTERNAL WALL BATTS

Location:	All External walls including garage
Brand:	Earthwool® glasswool insulation
R-value:	R 2.6
Thickness:	90 mm
Size:	To fit stud centres

Internal Walls - Acoustic Insulation

4.2 EARTHWOOL® GLASSWOOL INSULATION BATTS - FOR TIMBER FRAMED INTERNAL WALLS

Location:	All bedroom walls
Brand:	Earthwool® glasswool insulation
R-value:	R 2.6
Density:	20.0
Thickness:	90 mm
Size:	580 mm x 1160 mm

Ceiling - Thermal Insulation

4.3 EARTHWOOL® GLASSWOOL INSULATION: CEILING ROLLS

Location:	Entire ceiling
Brand:	Earthwool® glasswool
R-value:	R3.6
Thickness:	150mm
Dimensions:	1200mm x 7m

4821 FLASHINGS

1 GENERAL

This section relates to the fabrication and installation of flashing systems not forming part of a proprietary system.

1.1 RELATED WORK

Refer to 4311 Profiled Metal Roofing
Refer to 4521AR APL Residential Aluminium Windows & Doors

Documents

1.2 DOCUMENTS

Refer to the general section 1233 REFERENCED DOCUMENTS. The following documents are specifically referred to in this section:

NZBC B2/AS1	Durability
NZBC E2/AS1	External moisture
AS/NZS 2728	Prefinished/prepainted sheet metal products for interior/exterior building applications - Performance requirements
AS 3566	Self-drilling screws for the building and construction industries - General requirements and mechanical properties
NZS 3604	Timber-framed buildings
NZMRM CoP	NZ Metal Roof and Wall Cladding Code of Practice

Requirements

1.3 QUALIFICATIONS

Work to be carried out by trades people experienced, competent and familiar with the materials and techniques specified.

1.4 VERIFY DIMENSIONS

Verify dimensions against site measurements prior to fabrication.

Standards of performance

1.5 DURABILITY REQUIREMENTS

Design and install the flashings appropriate for the durability applications in accordance with NZBC B2/AS1. The Building Code B2, 3.2 requires that all hidden elements have at least the same durability as that of the element that covers it. Refer to NZBC B2/AS1 Table 1: Durability Requirements of Nominated Building Elements and NZBC E2/AS1 Table 20 Material selection.

1.6 COMPATIBILITY REQUIREMENTS

Each flashing material shall be selected in accordance with NZBC E2/AS1 Table 20 to minimise corrosion. Refer to either NZS 3604 Clause 4.2 or AS/NZS 2728 for the relevant exposure conditions. For compatibility of materials in contact and subject to run-off, refer to NZBC E2/AS1 table 21 and NZBC E2/AS1 table 22.

1.7 PROTOTYPES - REVIEW

Refer to the general section 1270 CONSTRUCTION for details of how prototypes will be reviewed and how instructions to proceed will be given. For flashings where there are no specific details or drawings, provide full size prototypes of the flashings to integrate components into the weathertight system. Co-ordinate with the trades affected by the installation. Provide the prototype flashings to the contract administrator for review.

2 PRODUCTS

2.1 FLASHING MATERIALS

Acceptable materials for flashings are described in NZBC E2/AS1, 4.0. Material, grade and colour as detailed and scheduled. Ensure that materials used for flashings are compatible with the building and cladding materials and their fixings.

2.2 FLASHING FABRICATION

Fabricate flashings generally to NZBC E2/AS1, 4.0, from a ductile grade of metal designed for lateral strength by folding, stiffening or ribbing on external edges, having a maximum un-stiffened width of 300mm. Provide all hooks, hems, kick outs, bird's beaks, stop ends, soft edges and turn downs etc. to NZBC E2/AS1, 4.0, or as shown on the drawings.

2.3 FIXINGS

Rivets, screws, nails and cleats to be compatible with the materials being fastened. Fasteners complying with the corrosion requirements of AS 3566 are suitable for use with ZINCALUME® steel products. Use only low carbon non-conductive sealing washers.

2.4 JOINTS - SEALANTS

Neutral Curing silicone or MS polymer sealant as required, with low resistance to compression and be-able to withstand large temperature variations. MS polymer sealant to be used where the sealant is exposed and the surrounding surfaces are to be subsequently painted or coated.

3 EXECUTION

Conditions

3.1 DELIVERY

Keep flashings dry in transit. Take delivery of flashings in an undamaged condition. Reject all damaged materials.

3.2 STORAGE

Store materials and accessories on a level, firm base, in dry conditions, well ventilated, out of direct sunlight and completely protected from weather and damage. Ensure storage areas are away from current work areas. Cover to keep dry until fixed.

3.3 HANDLING

Avoid distortion and contact with potentially damaging surfaces/substances. Do not drag flashings across each other, or across other surfaces. Protect edges, corners and surfaces from damage.

3.4 SUBSTRATE

Do not commence work until the substrate is of the standard required by the installer for the specified flashings, level and in true alignment.

3.5 PROTECT

Protect surfaces, window and door joinery, and finishes already in place, from the possibility of damage during the installation process.

3.6 CONFIRM LAYOUT

Before commencing work confirm the proposed installation of the flashings and expansion joints and other visual considerations of the finished work.

3.7 CO-ORDINATE INSTALLATION

Co-ordinate installation of flashings with associated trades.

Application

3.8 INSTALLATION

Install flashings in accordance with NZMRM CoP and in compliance with NZBC E2/AS1, 4.0 Flashings. For very high wind zones and where the pitch of the roof is below 15° the flashing joint laps shall be sealed with sealant at each end of the lap to prevent the ingress of water.

Refer to NZBC E2/AS1 Table 7 for general dimensions of flashings.

3.9 FIXINGS

Fix flashings with fasteners appropriate to the situation. For fixing flashings with proprietary brackets or clips ensure they are aligned to allow for movement and are compatible with the flashing material.

Fix screws with the shank perpendicular to the surface of the flashing with the washer fitted firmly against the flashing. Screws to be compatible with the flashing material.

Rivets 'blind' or 'pop' are to be sealed when used. Aluminium rivets are compatible with zinc or AZ coated steel. Monel and stainless steel rivets can be used to fix galvanized steel flashings. Minimum diameter of rivet to be used is 4.0mm. Drill hole 1mm larger than the rivet size. Seal head of rivet with neutral cured silicone.

3.10 JOINTING - SEALANTS

Clean surfaces to be lapped using a solvent ensuring all traces of the solvent are removed with a clean rag. Apply sealant by gun in a continuous bead of approximately 5mm diameter. Width of sealant when compressed should not exceed 25mm. Sealant joints shall be mechanically fixed for strength. Refer to NZMRM CoP for details.

3.11 FINAL INSPECTION

A final inspection by the installer to take place after completion of the flashing work. Any defects or subsequent damage to be made good.

Completion

3.12 PROTECT

Protect new work from damage.

3.13 REPLACE

Replace all damaged or marked elements.

3.14 LEAVE

Leave work to the standard required for following procedures.

3.15 REMOVE

Remove debris, unused materials and elements from the site.

4 SELECTIONS

4.1 FLASHINGS

Type	Material and finish
General flashings:	0.55mm Colorsteel
Window/doors:	
- Head:	0.7mm aluminium
- Sill:	0.7mm aluminium
Meter box:	0.7mm aluminium
Barge:	0.55mm Colorsteel
Roof penetrations:	0.55mm Colorsteel

5113G GIB® PLASTERBOARD LININGS

1 GENERAL

This section relates to the supply, fixing and jointing of GIB® plasterboard linings and accessories to timber and steel framed walls and ceilings to form:

- standard systems
- superior finish quality systems
- bracing systems
- fire rated garage boundary wall systems
- wet area systems
- GIBFix® Framing systems

1.1 RELATED WORK

Refer to 3820 Carpentry
Refer to 3827E Ecoply Plywood Bracing System

1.2 ABBREVIATIONS AND DEFINITIONS

Refer to the general section 1232 INTERPRETATION & DEFINITIONS for abbreviations and definitions used throughout the specification.

The following abbreviations apply specifically to this section:

AWCINZ	Association of Wall and Ceiling Industries New Zealand

Documents

1.3 DOCUMENTS

Refer to the general section 1233 REFERENCED DOCUMENTS. The following documents are specifically referred to in this section:

NZBC C/AS2	Protection from fire
NZBC E2/AS1	External moisture
AS 1397	Continuous hot-dip metallic coated steel sheet and strip - Coatings of zinc and zinc alloyed with aluminium and magnesium
AS/NZS 2588	Gypsum plasterboard
AS/NZS 2589	Gypsum linings - Application and finishing
NZS 3604	Timber-framed buildings
AS/NZS 4600:2005	Cold-formed steel structures
ISO 5660.1	Reaction-to-fire tests - Heat release, smoke production and mass loss rate - Part 1: Heat release rate (cone calorimeter method)
ISO 5660.2	Reaction-to-fire tests - Heat release, smoke production and mass loss rate - Part 2: Smoke production rate (dynamic measurement)
BRANZ Technical Paper P21	BRANZ Technical Paper P21: A wall bracing test and evaluation procedure (2010)
NASH	Residential and Low-Rise Steel Framing Part 1 2010 Design Criteria

1.4 MANUFACTURER/SUPPLIER DOCUMENTS

Manufacturer and Supplier documents relating to this part of the work.

	- GIB® Site Guide (September 2018) - GIB® Noise Control Systems (September 2017) - GIB® Fire Rated Systems (October 2018) - GIB Aqualine® Wet Area Systems (March 2007) - GIB Toughline® Aqua (July 2018) - GIB Ezybrace® Systems (2016) - GIB Ezybrace® Bracing Software - GIB Ezybrace® Systems (June 2011), with amendments (December 2014) - GIB Ezybrace® for Steel Frame Housing (NASH) Software (2011) - GIBFix® Framing System (2016) - GIB Rondo® Metal Ceiling Batten Systems - GIB-Cove® - GIB RocTape® - GIB Goldline™ Platinum Tape-on Trims (January 2006) - GIB UltraFlex® high impact corner mould (September 2004) - GIB® Tough Systems (Nov 2014)
BRANZ Appraisal 928 (2016)	GIB Ezybrace® Systems 2016
BRANZ Appraisal 427 (2007)	GIB Aqualine® Wet Area Systems
BRANZ Appraisal 928 (2016)	GIB Ezybrace® Systems 2016
GreenTag Certification	WWLCG001-001-A-2015 - GreenTag™ GreenRate / Level B for: - GIB® Standard (10mm & 13mm) - GIB Fyreline® (10mm, 13mm, 16mm & 19mm) - GIB Braceline® (10mm & 13mm) - GIB Noiseline® (10mm & 13mm) - GIB Toughline® (13mm) - GIB Wideline® (10mm & 13mm)

Copies of the above literature are available at:

Company:	Winstone Wallboards
Web:	www.gib.co.nz
Telephone:	0800 100 442

Requirements

1.5 NO SUBSTITUTIONS

Substitutions are not permitted to any specified GIB® systems, GIB® system components, GIB® plasterboard, associated GIB® products or GIB® accessories.

1.6 INSTALLER WORK SKILLS AND QUALIFICATIONS

GIB® plasterboard fixers and plasterers to be experienced competent workers, familiar with GIB® plasterboard lining systems installation and finishing techniques. Submit evidence of experience on request. For example:

- National Certificate of Interior Systems; or
- Certified Business member of AWCINZ.

Performance

1.7 INSPECTIONS AND ACCEPTANCE

Allow for inspection of the finished plasterboard surface:

- before applying sealer and
- before applying finish coatings or decorative papers,

so that after assessment of the type and/or angle of illumination and its effect on the completed decorative treatment, group approval and acceptance of the surface can be given.

1.8 BRACING REQUIREMENTS

Braced wall systems to NZS 3604 when tested to BRANZ Technical Paper P21, using:

- GIB Ezybrace® Systems (2016) and/or GIB Ezybrace® Bracing Software (2016)
- GIB Ezybrace® Systems (2011)
- GIB Ezybrace® for Steel Frame Housing (NASH) Software 2011 (to NASH Residential and Low-Rise Steel Framing Part 1 2010 Design Criteria)

Refer to drawings for location and type.

2 PRODUCTS

Materials

2.1 GIB® PLASTERBOARD

Gypsum plaster core encased in a face and backing paper formed for standard and water resistance use to AS/NZS 2588. Refer to SELECTIONS for location, type, thickness and finish.
GIB® Standard plasterboard
GIB Wideline® plasterboard
GIB Ultraline® high quality surface plasterboard
GIB Fyreline® fire resistant plasterboard
GIB Braceline® & GIB® Noiseline® dual purpose wall bracing & noise control plasterboard
GIB Aqualine® wet area plasterboard
GIB Toughline®
GIB Toughline® Aqua

Components

2.2 CEILING BATTENS

GIB® Rondo® metal ceiling battens, batten joiners and perimeter channel.

2.3 SCREWS

GIB® Grabber® drywall type screws as follows:

Grabber® type	Used for fixing:
High Thread	GIB Ezybrace® or Standard systems to timber
Self Tapping	Standard systems to light gauge steel or timber
Dual Thread Screws	GIBFix®, GIB Ezybrace®, or Standard systems, to light gauge steel or timber
Wafer Head Needle Tip	Light gauge metal to timber not directly under plasterboard
Pancake Head Drill Tip	Light gauge metal to light gauge metal directly under plasterboard

Refer to GIB® requirements for appropriate details.

2.4 TAPE ON TRIMS AND EDGES

GIB® Goldline™ tape-on trims
GIB® UltraFlex® high impact corner mould
GIB® Levelline® Tape on Trim

2.5 METAL ANGLE TRIMS

GIB® galvanized steel slim angle trims.

2.6 CONTROL JOINTS

GIB® Rondo® P35 control joints.
GIB® Goldline™ tape-on trims
GIB® plastic W-profile control joints.

Accessories

2.7 ADHESIVE

Timber frame and/or steel frame:
GIBFix® One ultra low VOC water based wallboard adhesive
GIBFix® All-Bond solvent based wallboard adhesive

2.8 JOINTING COMPOUND

Bedding compound:	GIB Tradeset®, GIB Lite Blue®, GIB MaxSet®, GIB ProMix® All Purpose, GIB Plus 4®
Finishing compound:	GIB ProMix® All Purpose, GIB® Trade Finish®, GIB® Trade Finish® Lite, GIB ProMix® Lite, GIB® U-Mix, GIB Plus 4®, GIB Trade Finish® Multi
Cove:	GIB-Cove® Bond

2.9 JOINTING TAPE

GIB® jointing tape.

2.10 GAP FILLER

GIB® Gap Filler ultra low VOC multi-purpose acrylic flexible filler

3 EXECUTION

Conditions

3.1 DELIVERY, STORAGE & HANDLING OF PRODUCTS

Refer to 1270 CONSTRUCTION for requirements relating to delivery, storage and handling of products.

3.2 LEVELS OF PLASTERBOARD FINISH

Provide the selected plasterboard surfaces to the pre decorative levels of finish specified in AS/NZS 2589.

3.3 CONFIRM LEVELS OF PLASTERBOARD FINISH ACCEPTANCE

Before commencing work, agree in writing upon the surface finish assessment procedure towards ensuring that the quality of finish expectations are reasonable and are subsequently obtained and acceptable.

Do not apply decorative treatment until it is agreed in writing by the contractor, subcontractors and decorator that the specified plasterboard Level of Finish has been achieved.

"Levels of plasterboard finish" is a tool for specifying the required quality of finish when installing and flush stopping GIB® plasterboard **prior** to the application of a range of decorative finishes under various lighting conditions. Refer to **AS/NZS** 2589.

3.4 SUBSTRATE

Do not commence work until the substrate is plumb, level and to the standard required by the sheet manufacturer's requirements. Refer to GIB® Site Guide (September 2018).

3.5 TIMBER FRAME MOISTURE CONTENT

Maximum allowable moisture content to AS/NZS 2589 for timber framing at lining: 18% or less for plasterboard linings. Refer to NZBC E2/AS1 and GIB® Site Guide (Sept 2018).

3.6 PROTECTION

Protect surfaces; cabinetwork, fittings, equipment and finishes already in place from the possibility of water staining and stopping damage. Refer to GIB® Site Guide (Sept 2018).

Application

3.7 INSTALL CEILING BATTENS

Install to GIB® Rondo® Ceiling Batten Systems requirements.

3.8 LINING WALLS AND CEILINGS GENERALLY

Form to GIB® Site Guide (September 2018). Ensure bulk insulation thickness shall not exceed that of the wall framing.

3.9 BOARD ORIENTATION

Minimise joints by careful sheet layout using the largest sheet sizes possible, and generally fixing horizontally. Where part sheets are required for various stud heights they should be positioned so the cut sheet is as low as possible to keep joints below eye level.

3.10 FORM WET AREA SYSTEMS

Form to GIB Aqualine® Wet Area Systems requirements.

3.11 FORM BRACING SYSTEMS

Form bracing systems to:

- GIB Ezybrace® Systems (2016)

3.12 FORM CONTROL JOINTS

Form control joints to GIB® Site Guide (September 2018) requirements.

3.13 INSTALL TAPE-ON TRIMS

Install to GIB® Goldline™ Tape-on trims literature and/or GIB® Ultraflex high impact corner mould literature.

Finishing

3.14 FINISHING GENERALLY

To GIB® Site Guide (September 2018) and AS/NZS 2589.

Completion & Commissioning

3.15 COMPLETION MATTERS

Refer to 1270 CONSTRUCTION for completion requirements and if required commissioning requirements.

4 SELECTIONS

Plasterboard

4.1 GIB® STANDARD SYSTEMS WALLS

Location	Plasterboard type / Lining requirements	Thickness	Finish Level
All Ceilings except Bathroom, Kitchen and Laundry	GIB® Standard plasterboard	10mm	Level 4

4.2 GIB® WATER RESISTANT SYSTEMS WALLS

Location	Plasterboard type / Lining requirements	Thickness	Finish Level
Bathroom, Kitchen and Laundry	GIB Aqualine® plasterboard	10mm	Level 4

4.3 GIB® STANDARD SYSTEMS CEILINGS

Location	Plasterboard type / Lining requirements	Thickness	Finish Level
All Ceilings except Bathroom, Kitchen and Laundry	GIB® Standard plasterboard	13mm	Level 4

4.4 GIB® WATER RESISTANT SYSTEMS CEILINGS

Location	Plasterboard type / Lining requirements	Thickness	Finish Level
Bathroom, Kitchen and Laundry	GIB Aqualine® plasterboard	13mm	Level 4

4.5 GIB® BRACING SYSTEMS

Refer to:

- GIB Ezybrace® Systems (2016)
- GIB Ezybrace® Systems (2011)

For bracing element location refer to drawn documentation.

Accessories

4.6 GIB® RONDO® CEILING BATTENS

Brand/type: GIB® Rondo® Ceiling battens

4.7 GIB® TAPE ON EDGE OR CORNER TRIMS

Brand/type: Paper Faced Metal Trims

4.8 GIB® EDGE PROFILES

Brand/type: Square Stop

5151 INTERNAL TRIM

1 GENERAL

This section relates to simple lengths of trim fixed on site as of isolated internal members, with simple end joints.
It includes:

- timber
- MDF

1.1 RELATED WORK

Refer to 3820 Carpentry
Refer to 5113G GIB Plasterboard Linings

Documents

1.2 DOCUMENTS

Refer to the general section 1233 REFERENCED DOCUMENTS. The following documents are specifically referred to in this section:

NZBC C/AS1, C/AS2	Protection from fire
NZS 3602	Timber and wood-based products for use in building
NZS 3604	Timber-framed buildings
NZS 3610	Specification for profiles of mouldings and joinery

2 PRODUCTS

Materials

2.1 TIMBER TRIM

To NZS 3610 and to profiles detailed on the drawings. Timber species, grade and treatment to NZS 3602.

Components

2.2 NAILS

Bright steel to dimension requirements of NZS 3604. Use galvanized where prone to dampness.

2.3 BRADS

Bright steel of a length three times the thickness of the member being fixed. Use cadmium plated where prone to dampness.

2.4 SCREWS, STEEL

Bright steel of a length to penetrate the substrate up to the shank. Use stainless steel in wet areas.

2.5 SCREWS, CHROME PLATED

Chrome plated of a length to penetrate the substrate up to the shank.

3 EXECUTION

Conditions

3.1 GENERALLY

To comply with NZS 3604, except as varied in this specification. Execution to include those methods, practices and processes contained in the unit standards for the National Certificate in Carpentry and the National Certificate in Joinery (cabinetry, exterior joinery, stairs).

3.2 STORAGE

Take delivery of trims undamaged and unmarked and store on site under cover, away from moisture, heat and direct sunlight in adequately ventilated area and clear of areas where work is in progress, to ensure materials are of the required standard when fixed in place.

3.3 ACCLIMATISE MATERIALS

Remove materials from packaging, separate and allow to acclimatise in the proposed installation area for 48 hours minimum prior to installation.

3.4 ENSURE

Ensure that the substrate to trims will allow work of the required standard. If it does not, do not proceed until the substrate has been remedied.

Application - Generally

3.5 INSTALL TIMBER TRIM

Use full lengths. Fit with scribed internal joints, mitred external joints and, mitred and returned at stop ends. Fix plumb, level and true to line and face using nails or brads to suit. Leave secure and with no movement possible.

Finishing

3.6 PUNCH

Punch all nail heads below the face of trim ready to receive stopping, as specified under painting preparation.

3.7 COUNTERSINK

Countersink screw heads not less than 2mm below the faces of trim to be painted. Stop and finish off flush with the face, as specified under painting preparation.

3.8 PELLETING

Countersink screw head 6mm below the faces of trim which is to be clear finished. Glue in grain-matched pellets not less than 6mm thick and cut from matching timber. Finish off flush with the face.

Completion

3.9 LEAVE

Leave the whole of this work free of blemishes, undamaged and to the standard of finish required for following procedures.

3.10 PROTECTION

Protect the completed work and make good before any surface finish is applied.

3.11 REPLACE

Replace damaged or marked elements.

3.12 REMOVE

Remove debris, unused materials and elements from the site.

4 SELECTIONS

4.1 INTERNAL TIMBER TRIM

Architrave:	40x10mm single bevel finger jointed, paint finish
Skirting:	60x10mm single bevel finger jointed, paint finish

5230 INTERIOR DOORS

1 GENERAL

This section relates to the supply and installation of interior doors.

1.1 RELATED SECTIONS

Refer to 3820 Carpentry
Refer 5113G GIB Plasterboard Linings

1.2 DOCUMENTS

Refer to the general section 1233 REFERENCED DOCUMENTS. The following documents are specifically referred to in this section:

NZS 3602	Timber and wood-based products for use in building
NZS 3610	Specification form profiles of mouldings and joinery

2 PRODUCTS

2.1 TIMBER

To NZS 3602.

2.2 PROFILES, FACINGS, SCRIBERS AND ARCHITRAVES

Traditional profiles to NZS 3610. Proprietary profiles and special profiles as detailed. Pencil radius corners of profiled schedules for paint finish.

2.3 DOORS, PAINTED

Doors as scheduled (without clashing strips).

2.4 CAVITY SLIDERS

Doors hung within a proprietary cavity slider frame and complete with brand-matched sliding door gear.

2.5 DOOR HINGES

Size and gauge to carry door. 3 hinges per door.

2.6 SLIDING DOOR GEAR

To suit door/sash size and glazed weight and as detailed.

3 EXECUTION

3.1 SITE MEASURE

Confirm framed openings on site for dimension, plumb and straightness prior to fabrication or ordering of timber joinery. Confirm lintel head and sill deflection for sliding or bi-fold door systems is within the manufacturer's specified tolerances. Provide not less than 10mm unless otherwise required.

3.2 EXECUTION GENERALLY

Manufacture to the methods, practices and processes contained in the unit standards for the National Certificate in Carpentry and the National Certificate in Joinery (cabinetry, exterior joinery, stairs).

3.3 FACTORY FIT HARDWARE

Factory fit the following where specified: -

- Hinges

3.4 FACTORY FINISHING

Before delivery to site: -

- Brace square and provide protection to assemblies during delivery to site. Where factory glazed, indicate the presence of transparent glasses with whiting, tape or signs compatible with the glass type.

Internal doors

3.5 INTERNAL JOINERY FRAMES

Fabricate as detailed. Wedge and rigidly fix in place without distortion, plumb, and true to line and face. Pre drill for fixings through frame. Countersink and plug frames scheduled for clear finish.

3.6 DOOR FRAMES, SOLID REBATED

Fabricate as detailed. Hang doors to operate freely on hinges, sliding, or bi-fold gear and to the door manufacturer's requirements. Pre drill for fixings through frame. Countersink and plug frames scheduled for clear finish. Fit hardware.

3.7 DOOR LINERS

Heads and jambs finished minimum 18mm, with 10mm planted door stops. Width to match width of lined walls. Hang doors on hinges, sliding, or sliding-folding gear to the door manufacturer's requirements and to operate freely. Countersink and plug frames scheduled for clear finish. Fit hardware.

3.8 DOOR LINERS, EXTENDED

Heads and jambs finished 30mm, rebated for wall linings and extended a minimum of 10mm. 10mm planted door stops. Hang doors on hinges, sliding and bi-fold gear to the door manufacturer's requirements and to operate freely. Countersink and plug frames scheduled for clear finish. Fit hardware.

3.9 CAVITY SLIDERS

Install in accordance with the door manufacturer's requirements, allowing for removal of top trim for maintenance.

Completion

3.10 CHECK

Check and adjust operation of all sashes, doors, hardware and furniture.

3.11 TEMPORARY PROTECTION

On completion remove any temporary protection and leave ready for following work.

4 SELECTIONS

4.1 HOLLOW CORE DOOR, PAINT FINISH

Refer to Client and Manufacturer Specifications.

4.2 CAVITY SLIDER DOOR

Refer to Client and Manufacturer Specifications.

4.3 SLIDING DOOR GEAR

Refer to Client and Manufacturer Specifications.

Accessories

4.4 DOOR HINGES

Interior doors

Type:	Loose pin
Size:	89mm
Material:	Zinc-plated steel
Pin:	Loose-pin zinc-plated steel

5510 JOINERY & PROPRIETARY FIXTURES

1 GENERAL

This section relates to custom joinery fixtures and proprietary fixtures.
It includes:

- fabrication, including off site finishing and installation of cabinetwork and joinery items
- assembly, placing, installation of proprietary fixtures
- fitting out of specialty spaces and cupboards
- fabrication and installation of timber staircases.

Documents

1.1 DOCUMENTS

Refer to the general section 1233 REFERENCED DOCUMENTS. The following documents are specifically referred to in this section:

NZBC D1/AS1	Access routes
AS/NZS 1859.2	Reconstituted wood based panels - Specifications - Dry processed fibreboard
AS/NZS 1860.1	Particleboard flooring - Specifications
NZS 3602	Timber and wood-based products for use in building

2 PRODUCTS

2.1 MEDIUM DENSITY FIBRE BOARD, WOOD VENEER

Urea-formaldehyde resin bonded wood fibre sheet to AS/NZS 1859.2 overlaid with natural wood veneer.

2.2 GLUES AND ADHESIVES

As approved by the manufacturer for the timber, timber product, or pre-finished timber product joint being used.

3 EXECUTION

3.1 JOINERY FIXTURES GENERALLY

Execution to include those methods, practices and processes contained in the current syllabus for the National Certificate in Carpentry and the National Certificate in Joinery (cabinetry, exterior joinery, stairs). Take responsibility for the completed joinery fixtures including fittings included within fixtures and the on site installation.

3.2 SITE MEASURE

Site check and confirm dimensions after wall linings have been fixed. Verify positions of electric power outlets, wiring to light fittings included in joinery fixtures, water supplies and waste pipe locations.

3.3 FABRICATION QUALITY

Carry out machining within the practices required for the particular timber, wood product or pre-finished wood product being used. Machine drill and cut holes and recesses and form joints to the componentry manufacturer's requirements. Ensure work is accurate, square and true to line and face.

3.4 FABRICATE JOINERY FIXTURES

Carry out jointing, dowelling and other operations necessary for the proper assembly of the fittings as detailed, with fixings concealed unless otherwise detailed. Use glue joints where provision for shrinkage is not required, with contact surfaces, glueing and pressure all applied to the glue manufacturer's requirements. Locate and drive connectors and fasteners to the bolt manufacturer's requirements. Scribe fit adjustable shelves with 4 shelf pins and locate force fit pin holes at 50mm maximum centres in solid cheeks. Hang doors on concealed hinges.

3.5 MAKE CUT OUTS FOR APPLIANCES AND FITTINGS

Obtain fitting templates from the appliances and other fittings to be installed within joinery fixtures and bench tops. Ensure appliances and fittings can be installed with the required tolerances and clearances. Where bench tops are being provided under other work sections, provide templates and confirm dimensions to others.

3.6 TRANSIT AND DELIVERY

Load, transport and unload fittings without distortion or damage and keep covered to protect from the weather. Do not deliver fittings until floor, wall and ceiling surfaces are in place and the fittings can be placed in their final location.

3.7 ASSEMBLE PROPRIETARY ITEMS

Check all components are included. Assemble to manufacturer's instructions and to achieve finished item.

3.8 INSTALL JOINERY FIXTURES

Scribe fit on site and install level, square, plumb and true to line and face.

3.9 LINEN CUPBOARD

Fit out with 2 full depth 19mm x 70mm timber slat shelves on ex 25mm scotia bead along ends. Shelf heights as shown on the drawings.

4 SELECTIONS

4.1 JOINERY PROPRIETARY ITEMS

Refer to Client and Manufacturer Specifications

4.2 MEDIUM DENSITY FIBRE BOARD, WOOD VENEER

Refer to Client and Manufacturer Specifications

6221M MAPEI® TILING SOLUTIONS

1 GENERAL

This section relates to floor and wall tiling systems with Mapei® tiling products:

- primers / sealers
- acoustic underlays
- wet area membranes
- adhesives
- grouts
- sealants

Documents

1.1 DOCUMENTS

Refer to the general section 1233 REFERENCED DOCUMENTS. The following documents are specifically referred to in this section:

NZBC D1/AS1	Access routes
NZBC E2/AS1	External moisture
NZBC E3/AS1	Internal moisture
AS 3740	Waterproofing of wet areas within residential buildings
AS 3958.1	Ceramic tiles - Guide to the installation of ceramic tiles
NZS 4121	Design for access and mobility - Buildings and associated facilities
BRANZ	Good practice guide: Tiling

1.2 MANUFACTURER/SUPPLIER DOCUMENTS

MBP (NZ) Ltd. documents relating to this part of the work:
Mapei® catalogue - Products for Ceramics and Stone Products
Mapei® product Technical Data Sheets
BRANZ Appraisal 484 - Mapegum WPS, Mapelastic, Mapelastic Smart, Mapelastic Turbo and Mapelastic AquaDefense Wet Area Membranes
BRANZ Appraisal 485 - Mapelastic, Mapelastic Smart and Mapelastic Turbo External Waterproofing Membranes

Manufacturer/supplier contact details

Company:	MBP (NZ) Ltd.
Web:	www.mbpltd.co.nz
Email:	enquiries@mbpltd.co.nz
Telephone:	09 921 1994

Warranties

1.3 WARRANTY - MANUFACTURER/SUPPLIER

Provide a tile manufacturer/supplier warranty:

2 years:	For tiling products

- Provide this warranty on the manufacturer/supplier standard form.

Refer to the general section 1237 WARRANTIES for additional requirements.

1.4 WARRANTY - MANUFACTURER/SUPPLIER

Provide a Mapei® products manufacturer/supplier warranty:

15 years:	For Mapelastic AquaDefense, Mapelastic Smart and Mapegum WPS
10 years	For other Mapei® tiling products

- Provide this warranty on the manufacturer/supplier standard form.

Refer to the general section 1237 WARRANTIES for additional requirements.

1.5 WARRANTY - INSTALLER/APPLICATOR

Provide an installer/applicator warranty:
2 years: For workmanship

- Provide this warranty on the installer/applicator standard form.
- Commence the warranty from the date of practical completion of the contract works.

Refer to the general section 1237 WARRANTIES for additional requirements.

Requirements

1.6 QUALIFICATIONS WORKERS – MANUFACTURER / SUPPLIER REQUIREMENTS

Workers to be approved MBP (NZ) Ltd. applicators. Refer to 1270 CONSTRUCTION for additional requirements relating to qualifications.

1.7 NO SUBSTITUTIONS

Substitutions are not permitted to any of the specified Mapei® systems, components and associated products listed in this section.

1.8 DEFLECTION CRITERIA FOR SUSPENDED FLOORS

Check that the floor is rigid enough for the tiling. Deflection of suspended floors should not exceed 1/360th of the span under dead load and live load.

Performance

1.9 INTERNAL / EXTERNAL MOISTURE

Wet area membranes under tiled areas to AS 3740, NZBC E2/AS1, NZBC E3/AS1 and to BRANZ Good Tiling Practice.

Quality control and assurance

1.10 INSPECTIONS

as per Kaipara District Council Building Consent

2 PRODUCTS

Materials - floor covering

2.1 TILES

Refer to SELECTIONS for option.

Levelling compounds

2.2 SELF - LEVELING COMPOUND - WOODEN FLOORS

Fiberplan, a fibre-reinforced ultra-fast hardening self-levelling smoothing compound for thicknesses from 3mm to 10mm.

2.3 TROWEL APPLIED LEVELING COMPOUND - SHORT COVERING TIME

Nivorapid, an ultra-fast drying thixotropic trowel applied cementitious leveling mortar for thicknesses from 3mm to 20mm. Interior application only.

2.4 TROWEL APPLIED SMOOTHING & REPAIR COMPOUND - Q

Planitop Smooth & Repair R4, rapid setting fibre reinforced trowel applied levelling mortar for horizontal and vertical, internal and external concrete substrates, for thicknesses from 3mm to 40mm.

2.5 TROWEL APPLIED SMOOTHING AND LEVELING COMPOUND - QUICK SETTING

Planitop Fast 330, quick-setting, fibre-reinforced trowel applied levelling mortar of cementitious binders, aggregate, synthetic resin and additives for thicknesses from 3 to 30mm. For interior and exterior application.

2.6 SELF - LEVELING COMPOUND - HEAVY LOAD USES

Ultraplan, an ultra-fast hardening self-levelling smoothing compound from 1mm to 10mm. For installing onto internal concrete substrates only.

2.7 SELF - LEVELING ECO COMPOUND

Ultraplan Eco, an ultra-fast hardening self-levelling smoothing compound with very low VOC content for thicknesses from 1mm to 10mm. For installing onto internal concrete substrates only.

2.8 HIGH BUILD LEVELING COMPOUND - APPLICATIONS

Ultraplan Maxi, an ultra-fast hardening self-levelling smoothing compound for thicknesses from 3mm to 30mm. For installing onto internal concrete substrates only.

2.9 HIGH BUILD LEVELING COMPOUND - HEAVY LOADS

UC Leveller, fast hardening self-levelling compound for thicknesses from 3mm to 70mm. For installing onto internal concrete substrates only.

2.10 SCREED BINDER - 24 HOUR CURE

Mapecem, a fast setting and drying (24 hour cure) hydraulic binder for shrinkage-compensated screeds.

2.11 PRE-BLENDED SCREED - 24 HOUR CURE

Mapecem Pronto, pre-blended ready to use rapid setting shrinkage compensated screed for internal and external applications.

2.12 SCREED - 4 DAY CURE

Topcem, a fast setting and drying (4 day cure) hydraulic binder for shrinkage-compensated screeds.

2.13 CONCRETE/SAND & CEMENT SCREED ADMIXTURE - IMPROVED ADHESION

Planicrete, a synthetic-rubber latex for the improved adhesion of cement mixes and bonding slurries for bonded screeds to concrete substrates for interior and exterior application.

Primers/sealers

2.14 INTERIOR WET AREA PRIMER

Primer S, a waterproofing primer in water dispersion.

2.15 GENERAL PURPOSE PRIMER

Primer 3296, acrylic primer in water dispersion for porous substrate for use in interior and exterior applications.

2.16 LEVELING COMPOUND PRIMER

Eco Prim T Plus, acrylic primer in water dispersion to improve adhesion of leveling compounds on absorbent and non-absorbent substrates, for interior use only.

2.17 NON-POROUS SUBSTRATE PRIMER

Mapeprim SP, two component solvent free primer for improved adhesion for interior use only.

2.18 NON-POROUS SUBSTRATE PRIMER - SINGLE COMPONENT

ECO Prim Grip, one component acrylic primer of synthetic resin in water dispersion for interior and exterior use.

2.19 MOISTURE BARRIER EPOXY-CEMENTITIOUS PRIMER

Triblock P, a three-component, epoxy-cementitious primer for damp substrates.

2.20 MOISTURE BARRIER EPOXY PRIMER & PROTECTIVE COATING

Planiseal MR, two component water based epoxy primer and moisture barrier for positive and negative hydrostatic pressure for interior and exterior use.

Adhesives

2.21 RAPID SETTING ADHESIVE - CERAMIC TILES/NATURAL STONE

Granirapid, a high performance, deformable, fast setting and hydrating two- component cementitious adhesive.

2.22 CEMENT BASED POWDER ADHESIVE AND ADDITIVE

Kerabond Plus, a cement based powder mixed with Isolastic, a latex additive to impart elasticity.

2.23 NON-PORUS SUBSTRATE SPECIAL PURPOSE ADHESIVE

Keralastic T, a high performance, two component, polyurethane adhesive for ceramic tiles and natural stone.

2.24 MULTI SUBSTRATE CEMENT BASED ADHESIVE

Keraflex Maxi S1, a high performance, deformable cementitious adhesive with extended open time and no vertical slip for ceramic tiles and stone material, with Low Dust Technology.

2.25 CEMENT BASED POWDER ADHESIVE AND ADDITIVE - RAPID SETTING

Keraquick S1 zero, a high performance, deformable, fast setting cementitious adhesive with no vertical slip, mixed with Latex Plus, a latex admixture introducing elasticity to provide improvement of deformability.

2.26 EPOXY ADHESIVE

Kerapoxy Adhesive, a two component epoxy adhesive with no vertical slip for ceramic tiles and natural stone material.

2.27 PREMIXED ADHESIVE

Ultramastic III, a high performance, ready to use paste adhesive with no vertical slip and extended open time, for ceramic tiles.

2.28 CEMENT BASED ADHESIVE – MOSAICS

Adesilex P10, a high performance white cementitious adhesive with no vertical slip for bonding of glass, ceramic and marble mosaics.

2.29 CEMENTITIOUS DEFORMABLE ADHESIVE - TILES

Ultralite S1, one component lightweight deformable cement and synthetic resin based adhesive for use in interior and exterior applications.

2.30 CEMENTITIOUS HIGHLY DEFORMABLE ADHESIVE - TILES

Ultralite S2, one component lightweight highly deformable cement and synthetic resin based adhesive for use in interior and exterior applications including external facade tiling.

2.31 CEMENTITIOUS HIGHLY DEFORMABLE RAPID SETTING ADHESIVE - TILES

Ultralite S2 Quick, one component lightweight highly deformable rapid setting cement and synthetic resin adhesive for use in interior and exterior applications including external facade tiling.

Grouts

2.32 POLYMER-MODIFIED MULTI-PURPOSE CEMENTITIOUS GROUT

Ultracolor Plus, a fast setting and drying, high performance, polymer-modified, anti-efflorescence, water-repellent grout for joints from 2mm to 10mm, with DropEffect and anti-mould with BioBlock technology.

2.33 EPOXY GROUT

Kerapoxy, a high performance, two-component, acid-resistant epoxy grout for joints of at least 3mm, for ceramic tiles and natural stone material.

Sealants

2.34 MULTI-PURPOSE SILICON SEALANT

Mapesil AC and Primer FD, a solvent-free, acetic cross-linking mildew-resistant silicon sealant with an associated adhesive enhancing primer.

2.35 NEUTRAL SILICON SEALANT - NATURAL STONE

Mapesil LM, an odourless one-component neutral cross-linking, silicon sealant for natural stone.

2.36 SINGLE COMPONENT POLYURETHANE SEALANT

Mapeflex PU45, a single component, thixotropic, rapid hardening polyurethane sealant and adhesive with a high modulus of elasticity.

2.37 SINGLE COMPONENT POLYMER-BASED SEALANT AND ADHESIVE

Mapeflex MS45, a single component flexible, thixotropic, quick-hardening sililated polymer-based hybrid sealant and adhesive with a high modulus of elasticity.

Components - waterproofing

2.38 ADHESIVE

Adesilex LP, adhesive to joint Mapeband Blue rubber tape.

2.39 WATERPROOFING TAPE - MAPEBAND SA

Mapeband SA, an alkali resistant butyl self-adhesive waterproof tape.

2.40 WATERPROOFING MEMBRANE SYSTEM - INTERIOR USE

Mapegum WPS, a fast drying, synthetic resin-based liquid elastic membrane for interior waterproofing. To waterproof edges and expansion joints use Mapeband Easy, Mapeband Blue or Mapeband SA

2.41 WATERPROOFING MEMBRANE SYSTEM - INTERIOR USE

Mapelastic AquaDefense, a one component, solvent-free, ready-to-use, quick drying synthetic resin based paste in water dispersion for interior applications. Provides a waterproofing layer to concrete, concrete block, cementitious screeds and render, plasterboard and fibre cement board before laying ceramic, stone and mosaic tiles. To waterproof edges and expansion joints apply Mapeband Easy, Mapeband Blue or Mapeband SA.

2.42 WATERPROOFING MEMBRANE - MULTI PURPOSE USE

Mapelastic Smart, a two component flexible cementitious waterproofing membrane, for interior and exterior ceramic tile and natural stone To reinforce waterproof protection layers and anti-fracture layers use Mapenet 150 waterproof reinforcing mesh or Mapetex Sel. To waterproof edges and expansion joints use Mapeband SA (do not use Mapeband SA for areas of full immersion).

Components - cleaning

2.43 GROUT & TILE CLEANING AGENT

Keranet, an acid-based general tile cleaner.

2.44 CLEANER

Kerapoxy Cleaner, a high performance cleaner for epoxy grout.

2.45 SOLVENT GEL

Pulicol 2000, a solvent based gel for removing old natural and synthetic resin-based adhesives, paint and grouts/grout residue.

Accessories

2.46 STRIPS AND WEATHERBARS

Unless otherwise specified edge strips, floor finish divider strips and weather bars shall be aluminium.

2.47 EXPANSION JOINT, METAL AND RUBBER

Clear anodised aluminium/brass with metal anchor to set into in-situ concrete, cement screed/bed and complete with rubber infill.

2.48 EXPANSION JOINT, METAL AND COMPOUND

Aluminium/brass angles with high density foam rubber insert and jointing compound.

2.49 EXPANSION JOINT, PLASTIC

Rigid stabilised PVC sides with flexible central section.

3 EXECUTION

Conditions

3.1 DELIVERY, STORAGE & HANDLING OF PRODUCTS

Refer to 1270 CONSTRUCTION for requirements relating to delivery, storage and handling of products.

3.2 ROUTINE MATTERS

Refer to 1250 TEMPORARY WORKS & SERVICES for protection requirements.
Refer to 1270 CONSTRUCTION for requirements relating to defective or damaged work, removal of protection and cleaning.

3.3 STANDARDS AND TOLERANCES

Refer to the general section 1270 CONSTRUCTION for general requirements.
Check that maximum variation in the plane of the substrate is no greater than ±4mm in 2 linear metres before commencing tiling.

3.4 CHECK TILES

Check tiles to ensure that they are as specified, from the same batch, of a consistent colour and pattern and sufficient to complete the work. Reject tiles that vary widely in colour or pattern. Reject tiles that are damaged.

3.5 CONFIRM LAYOUT

Before commencing work confirm the proposed layout of tiles and expansion joints and other visual considerations of the finished work.

3.6 BACKGROUND MATERIALS

Ensure that the installation of background materials and substrate materials meets relevant standards and the manufacturer's instructions. Inspect background and substrate materials for any conditions unsuitable for tiling over. Do not commence work until the affected area is rectified. Confirm any specific preparation required for the adhesive being used.

3.7 PREPARATION OF BACKGROUNDS

Prepare backgrounds in accordance with AS 3958.1, section 4 and in accordance with the Mapei® instructions for the selected substrate.

3.8 FALLS

Form screeds in areas where water is used in significant amounts with a deviation from plane of not more than 5mm over 3 metres. Unless otherwise specified form screeds with the following falls:

Unless stated otherwise provide minimum fall gradients to BRANZ Good Practice Guide - Tiling, clause 6.6 Falls in floors.

1 : 40 minimum	For tiled decks which also act as a roof
1 : 60 minimum	For paving over ground
1 : 50 minimum	For unenclosed shower bases (to NZBC E3/AS1, 3.3.5)
1 : 60 minimum	For enclosed shower bases
1 : 50 minimum	For shower bases for people with disabilities (to NZS 4121, 10.5.11.3 (b).)
1 : 60 minimum	For commercial kitchens or similar

3.9 WATERPROOFING WET AREAS

Areas to be waterproofed shall be in accordance with NZBC E3/AS1, AS 3740 and BRANZ Good Practice Guide -Tiling Section 7: Waterproofing interior wet areas, as shown on the drawings or stated in SELECTIONS.

3.10 SERVICES AND ACCESSORIES

Ensure that all services and accessories are in place and located to suit the tile layout, and that the substrate, background and adjoining surfaces (with the preparation called for in this section) are of the quality necessary to allow tiling of the required standard.

3.11 DO NOT START

Do not start laying tiles until concrete floors are cured, moisture content of floors is such that shrinkage is complete, thermal movement has been accommodated and the levels and surface finish will allow for tile laying of the required standard.

3.12 SUBSTRATE TEMPERATURE

Do not carry out tiling where the substrate temperature is below 5°C or above 40°C.

3.13 MOISTURE CONTENT

Ensure the floor is dry and if in doubt check for moisture content by hygrometer. Do not proceed with tiling work until readings for the whole area show 75% relative humidity or less.

Application

3.14 APPLICATION GENERALLY

Prepare backgrounds as described in AS 3958.1, Section 4. Suitably prepare backgrounds and substrates in accordance with the manufacturer's instructions to receive the bedded finish. Remove all dirt, dust, grease, oil, loose particles and any other form of contamination or deleterious material. Ensure that substrates are sound and dry.

Installation to be in accordance with AS 3958.1, Section 5, including setting out, fitting, movement joints, sealants, tile finish and joints, and grouting.

Application of primers/ sealers, undertile membranes, waterproofing, adhesives grouts and sealants to comply with MAPEI® technical data sheets and application details for specific products.

3.15 SUBSTRATE PREPARATION

Refer to 6192 FLOORING SUBSTRATE PREPARATION for preparation of substrates for laying of ceramic tiles and natural stone.

3.16 LEVELLING COMPOUNDS

Prepare for and apply levelling compounds to MAPEI® technical data sheets and application details for specific product.

3.17 PRIMERS/SEALERS

Apply primers to MAPEI® technical data sheets and application details for specific product.

3.18 WET AREA MEMBRANE WATERPROOFING

Apply wet area waterproofing systems in accordance with MAPEI® technical data sheets and requirements.

3.19 SETTING OUT

Setting out, cutting and fitting of tiles to be as described in AS 3958.1, clauses 5.4.2 and 5.4.3. Set out tiling as shown on the drawings. Confirm bond and pattern before installing. Provide even and correct falls to floor tiles where required, including falls to floor wastes. Ensure that a level finish is provided at wall lines. Where falls are not required ensure that the tiles are laid level.

3.20 TILE FINISH AND JOINTS

Provide tile finish and joints, including tolerances, as described in AS 3958.1, clause 5.4.6. Joint widths to be suited to tile and in accordance with the manufacturer's instructions.

3.21 MOVEMENT JOINTS

Install movement joints with a minimum joint width of four times the expected movement. Provide a 9 to 10mm minimum joint width for exterior joints at 3.6m maximum spacings and a 12mm minimum joint width for 4.8m maximum spacings. Increase joint width by 1.5mm for each 10°C over or below a 35°C temperature range.

Provide movement control joints:

- to coincide with control joints in the substrate / structure.
- where substrate material changes.
- where tiles are restrained by building elements.
- where flexing of the structure will occur.
- to the perimeter of tiles that abut another material.
- where tile surfaces change in plane.
- where tile type changes.
- radiating from an external corner of an L-shaped tiled area

Provide movement joints at 4.5m spacing to tiled floors exposed to direct sunlight and at 6m maximum spacing for shaded internal tiled floors (reduce these spacings by 15 to 20% for flexible organic adhesives).

Provide movement joints at 3 to 4.5m centres along the length of internal and external walls (reduce these spacings by 15 to 20% for flexible organic adhesives) and at storey heights.

3.22 APPLY ADHESIVE

Apply and float thick or thin bed of cement based adhesive to 6mm maximum and 3mm minimum bed thickness to the tile manufacturer's requirements. Rib surface with a notched trowel, press tiles and place with 3mm grout joints and to obtain adequate coverage by adhesive on the back of each tile to AS 3958.1.

3.23 GROUTING

Apply grout to tiling in accordance with Mapei® technical data sheets and application details for specific product and as described in AS 3958.1, clause 5.7.

3.24 SEALING

Apply sealants to tiling in accordance with Mapei® technical data sheets and application details for specific product.

3.25 CLEAN TILES

Upon completion of setting and grouting, thoroughly sponge and wash the tiles to leave them completely clean and without blemish. Use Mapei Keranet to clean tiles of cementitious residue as necessary and Mapei Kerapoxy Cleaner to remove residues of epoxy grout from tile surfaces. Finally polish glazed tiles with a clean dry cloth.

Completion & Commissioning

3.26 COMPLETION MATTERS

Refer to 1270 CONSTRUCTION for completion requirements and if required commissioning requirements.

3.27 COMPLETION - TESTS & CERTIFICATION

Refer to 1270 CONSTRUCTION for general test and certification requirements at completion.

4 SELECTIONS

For further details on selections go to www.mbpltd.co.nz.
Substitutions are not permitted to the following, unless stated otherwise.

Materials

4.1 CERAMIC TILES

Manufacturer:	TBC by client
Pattern/number:	TBC by client
Colour:	TBC by client
Edging:	TBC by client

4.2 MAPEI® LEVELLING COMPOUNDS

Type:	TBC by Tiler

4.3 MAPEI® PRIMERS/SEALERS

Type:	Mapei® Primer S

4.4 MAPEI® ADHESIVES

Type:	Mapei® Ultramastic III

4.5 MAPEI® GROUT

Type:	Mapei® Keracolor FF
Additive:	TBC
Colour:	TBC by client

4.6 MAPEI® SEALANT

Type:	Mapei® Mapesil AC
Colour:	TBC by Tiler

Components

4.7 MAPEI® - MAPEGUM WPS WATERPROOFING MEMBRANE SYSTEMS

Membrane:	Mapegum WPS
Reinforcement:	Mapetex Sel waterproof reinforcing mesh
Edges:	Mapeband PE 120
Expansion joints:	Mapeband PE 120

4.8 MAPEI® - MAPELASTIC AQUADEFENSE WATERPROOFING MEMBRANE SYSTEMS

Membrane:	Mapelastic AquaDefense
Edges:	Mapeband PE 120
Expansion joints:	Mapeband PE 120

4.9 MAPEI® - MAPELASTIC SMART WATERPROOFING MEMBRANE

Membrane:	Mapelastic Smart
Reinforcement:	Mapenet 150 waterproof reinforcing mesh
Edges:	Mapeband PE 120
Expansion joints:	Mapeband PE 120

Spares & maintenance products

4.10 SPARES & MAINTENANCE PRODUCTS

Refer to the general section 1270 CONSTRUCTION for details of how spares and maintenance products will be handled.

6511 CARPETING

1 GENERAL

This section relates to the supply and installation of carpet laid conventionally (stretched), direct stuck or double bonded (double direct stuck).
It includes:

- carpet underlay
- woven sheet carpet

Documents

1.1 DOCUMENTS

Refer to the general section 1233 REFERENCED DOCUMENTS. The following documents are specifically referred to in this section:

NZBC C/AS2	Protection from fire
AS/NZS 2270	Plywood and blockboard for interior use
AS/NZS 2455.1	Textile floor coverings - Installation practice - General

Warranties

1.2 WARRANTY - MANUFACTURER/SUPPLIER

Provide a material manufacturer/supplier warranty:

1 year:	For materials

- Provide this warranty on the manufacturer/supplier standard form.
- Commence the warranty from the date of practical completion of the contract works.

Refer to the general section 1237 WARRANTIES for additional requirements.

1.3 WARRANTY - INSTALLER/APPLICATOR

Provide an installer/applicator warranty:

1 year:	For execution

- Provide this warranty on the installer/applicator standard form.
- Commence the warranty from the date of practical completion of the contract works.

Refer to the general section 1237 WARRANTIES for additional requirements.

Requirements

1.4 QUALIFICATIONS

Refer to 1270 CONSTRUCTION for requirements relating to qualifications.

1.5 ACCEPTABLE PRODUCT/MATERIAL SUPPLIERS

Where a product or material supplier is named in SELECTIONS, the product/material must be provided by the named supplier. Where more than one named supplier, any one of the named suppliers will be acceptable.

1.6 NO SUBSTITUTIONS

Substitutions are not permitted to any of the specified systems, components and associated products listed in this section.

2 PRODUCTS

Materials

2.1 UNDERLAY

To AS/NZS 2455.1 Soft underlay and underlays manufacturer's requirements.
Refer to SELECTIONS for product selection.

2.2 CARPET

To AS/NZS 2455.1 Textile floor coverings.
Refer to SELECTIONS for product selection.

Components

2.3 BINDER BARS

Anodised aluminium section with fluted face.

2.4 DIVIDER STRIPS

Hardwood strips 20mm x 15mm or as specified. Refer to SELECTIONS for type and size.

2.5 EDGE GRIPPER

Timber/plywood to AS/NZS 2270 with steel grippers to carpet manufacturer's requirements, constructed of sufficient pins and nails so as to withstand a minimum stretching force of 6580N over a 1220 mm length.

Accessories

2.6 TAPE

To carpet manufacturer's requirements.

3 EXECUTION

Conditions

3.1 DELIVERY, STORAGE & HANDLING OF PRODUCTS

Refer to 1270 CONSTRUCTION for requirements relating to delivery, storage and handling of products.

Handle carpet on flat dollies using carpet cradles, with probes on fork- lifts and without sharp bending or folding. Store carpet in flat bins with a maximum height of three rows. Keep dry. Protect from damage.

3.2 PRE-INSTALLATION REQUIREMENTS

Check work previously carried out and confirm it is of the required standard for this part of the work. Ensure all fittings and fixtures around which the carpet is to be scribed are in place. Carry out such additional preparatory work as required in bringing the substrate to suitable condition.

Confirm moisture content of substrate in accordance with AS/NZS 2455.1. Appendix B Do not commence laying carpet until readings for the whole area are within acceptable levels as follows:

Moisture Content:	Timber substrate - 8 -12% for air conditioned buildings - 10 -14% for intermittently heated buildings - 12 -16% for unheated buildings
	Concrete substrate 75%RH

3.3 PROTECTION

Protect adjoining work surfaces and finishes during the carpet installation.

3.4 TAPE

Tape for binding and seaming using type and width required by the carpet manufacturer to suit the specified carpet and the standard of performance required.

3.5 LAYOUT

Plan the general layout so that:

- seams run lengthways
- traffic runs along the seam
- light from windows is not across the seam
- pile faces away from the light source.

3.6 TEMPERATURE

Acclimatise carpet to a room temperature above 15°C through the whole of the installation.

Application - general / substrate preparation

3.7 PREPARING NEW CONCRETE FLOOR

To be level, smooth, clean, cured and dry. Remove loose material and dust.

Application - carpet laying

3.8 INSTALLATION, UNDERLAY

Installation to underlay manufacturer's requirements. Lay at right angles to the carpet direction.

3.9 INSTALLATION, CONVENTIONAL SYSTEM

Tape carpet joints, fix grippers to floor and install underlay and carpet to AS/NZS 2455.1, section 3. Stretch carpet tight in both width and length evenly without bowing, square with walls.

3.10 FIXING TRIMS

Fix binder bars, carpet to carpet bars, and trims to all junctions with other materials and to carpet edges, to the carpet manufacturer's requirements. Ensure that junctions with other materials are neatly formed, with bars and trim securely fastened to the substrate, 20mm from each end and at a maximum of 100mm centres.

Completion

4 SELECTIONS

Substitutions are not permitted to the following, unless stated otherwise.

4.1 UNDERLAY

Refer to Client and Manufacturer Specifications.

4.2 CARPET

Refer to Client and Manufacturer Specifications.

4.3 BINDER BARS

Refer to Client and Manufacturer Specifications.

4.4 DIVIDER STRIPS

Refer to Client and Manufacturer Specifications.

6700 PAINTING GENERAL

1 GENERAL

This section relates to the general matters related to painting work

1.1 RELATED WORK

Refer to 6711 PAINTING EXTERIOR for exterior paint systems.
Refer to 6721 PAINTING INTERIOR for interior paint systems.

1.2 ABBREVIATIONS

The following abbreviations are used throughout this part of the specification:

APAS	Australian Paint Approval Scheme
MPNZA	Master Painters New Zealand Association Inc.
VOC	Volatile organic compound

Documents

1.3 DOCUMENTS

Refer to the general section 1233 REFERENCED DOCUMENTS. The following documents are specifically referred to in this section:

NZBC C/AS2	Protection from fire
AS/NZS 2311	Guide to the painting of buildings
AS/NZS 2312.1	Guide to the protection of structural steel against exterior atmospheric corrosion by the use of protective coatings - Paint Coatings
AS/NZS ISO 9001	Quality management systems - requirements
SNZ TS 3404	Durability requirements for steel structures and components
WorkSafe NZ	Guidelines for the provision of facilities and general safety in the construction industry
WorkSafe NZ	Guidelines for the management of lead-based paint
MPNZA	Specification manual
MPNZA	Health and Safety Programme

Health and Safety at Work Act 2015

Requirements

1.4 NO SUBSTITUTIONS

Substitutions are not permitted to any specified manufacturer's system, or associated components and products.

1.5 QUALIFICATIONS

Painters to be a member of MPNZA and experienced competent workers, familiar with the materials and the techniques specified.

1.6 HEALTH AND SAFETY

Refer to the requirements of the Health and Safety at Work Act 2015 and WorkSafe NZ: Guidelines for the provision of facilities and general safety in the construction industry. If the elimination or isolation of potential hazards is not possible then minimise hazards in this work on site by using the proper equipment and techniques as required in the MPNZA Health and Safety Programme. Supply protective clothing and equipment. Inform employees and others on site of the hazards and put in place procedures for dealing with emergencies.

Refer to WorkSafe NZ: Guidelines for the management of lead-based paint for the required procedures and precautions when:

- treating/removing lead-based paint
- burning off paint
- sanding off paint
- using solvent based paint removers.

1.7 MATERIAL SAFETY DATA SHEET

Obtain from each paint manufacturer the material safety sheet for each product used. Keep sheets on site and comply with the required safety procedures.

Warranties

1.8 WARRANTY

Warrant this work under normal environmental and use conditions against failure.
2 years: Warranty period

Refer to the general section 1237WA WARRANTY AGREEMENT for the required format and details of when completed warranty must be submitted.

Performance

1.9 MANUFACTURER'S INSPECTION

Allow the paint manufacturers to inspect the work in progress and to take samples of their products from site if requested.

1.10 INSPECTION OF WORK

Inspection of the whole of the work at each of the stages scheduled may be made. Agree a programme that will facilitate such inspection, including notification when each part and stage of the work is ready for inspection.

2 PRODUCTS

Materials

2.1 PAINT TYPES

Use the manufacturer's complete system and only the products specified.

2.2 MATERIALS GENERALLY

Use only the Manufacturer's products which are guaranteed for their consistency and performance under AS/NZS ISO 9001 and APAS approval, prepared, mixed and applied as directed in the Manufacturer's specification sheets, specification manuals and product data sheets.

2.3 THINNERS AND ADDITIVES

Only use thinners or additives within the stated limits for the particular situations specified.

Accessories

2.4 FILLERS

For recommendations on; fillers, stopping, paint strippers, cleaning agents, etching solutions, mould inhibitors, rust inhibitors, knotting and other commodities used for the surface preparation, refer to the manufacturer of the specified coating.

3 EXECUTION

Conditions

3.1 EXECUTION

To conform to manufacturer's requirements and those methods, practices and techniques contained in AS/NZS 2311, the MPNZA Specification manual, and WorkSafe NZ: Guidelines for the provision of facilities and general safety in the construction industry.

3.2 PREPARE

Prepare surfaces to the coating manufacturer's requirements.

3.3 COATED SURFACES

Ensure that substrate surfaces are able to achieve the specified finish.

3.4 PRE-PRIMED SURFACES

Sand down any breakdown or damage of the primer to a sound surface and immediately re-prime.

3.5 BRUSH DOWN

Brush down surfaces immediately before application, to remove dust, dirt and loose material.

3.6 COMPATIBILITY

Check that materials are as required by the paint manufacturers for the particular surface and conditions of exposure, and that they are compatible with each other. Use paint from the same manufacturer for each paint system. If not compatible, obtain instructions before proceeding.

3.7 TREATED SURFACES

Where surfaces have been treated with preservatives or fire retardants, check with the treatment manufacturer that coating materials are compatible with the treatment and do not inhibit its performance. If they are not compatible, obtain instructions before proceeding.

3.8 BACK PAINTING

Co-ordinate with cladding and/or lining installer as to who will do the work and timing.

Exterior
For exterior cladding and trim that require on site finishing, paint the back and exposed bottom edges at the base of the cladding (generally, bottom plate overhang and horizontal flashings) to the manufacturer's requirements, but at least to 150mm up from base. Coating to match front finish, generally apply 2 coats or 1 coat if pre-primed.
Refer to appropriate exterior paint sections SELECTION clauses for claddings to be back painted.

Interior
For lining and trim that require on site finishing and/or back painting (usually wet areas), paint the back and exposed bottom edges at the base of the lining, to the manufacturer's requirements, but at least to 150mm up from base. Coating to match front finish, generally apply 2 coats or 1 coat if pre-primed, or if no front finish seal to manufacturer's requirements.
Refer to appropriate interior paint sections SELECTION clauses for linings to be back painted.

3.9 ANCILLARY SURFACES

The coatings listed in schedules and elsewhere are of necessity simplified. Coat ancillary exposed surfaces to match similar or adjacent materials or areas, except where a fair-faced natural finish is required or items are completely prefinished. In cases of doubt obtain instructions before proceeding.

3.10 HARDWARE

Do not paint hinges or hardware that cannot be removed. If items can be removed, carefully remove hardware, fixtures and fittings before commencing work. Set aside where they cannot be damaged or misplaced and replace on completion.

3.11 PROTECTION

Use dropsheets, coverings and masking necessary to protect adjoining fixtures, fittings and spaces from paint drops, spots, spray and damage.

Preparation - unpainted linings

3.12 PREPARING FIBROUS PLASTER

Check for and remove release agents and other contaminants by washing with clean water or solvent and allow to dry. Fill cracks and surface imperfections with patching plaster and lightly sand smooth. Remove dust.

3.13 PREPARING PLASTERBOARD

Check that joints are prepared to a smooth level surface finish. Fill cracks and surface imperfections with the sheet manufacturer's required stopping compound and lightly sand smooth. Remove dust.

Preparation - painted surfaces generally

3.14 SURFACE PREPARATION

Refer to the Manufacturer's specification sheets and product data sheets. Carry out the preparatory work required by them for each of the substrates.

For interior surfaces such as paper faced plasterboard use the Manufacturer's recommended finishing compound as an aid to achieving a Level 5 finish.

3.15 MOULD

Sterilise surface mould by washing or sponging the whole surface with a one part sodium hypochlorite household bleach to three parts clean water solution. Allow bleach to act for 30 minutes and wash off with clean water. Wash cloths and sponges regularly in clean water. Reapplication may be necessary. Treat with anti-mould solution to the treatment manufacturer's requirements.

3.16 GAP FILLING

Fill cracks, holes, indented and damaged surfaces with putty, plaster filler, wood filler, or plastic wood, as appropriate and in accordance with the paint manufacturer's requirements. Allow to dry or set before sanding back level with the surface. Prime coat or seal the timber before using putty. Wet cement or gypsum base plasters before applying filler. Use only Portland cement base types, or water-insoluble organic-based gap fillers in exterior or wet areas.

Application - before applying final coatings

3.17 OFF-SITE WORK

Carry out off-site preparation and coating under cover, in a suitable environment and with adequate lighting. Store items both before and after coating in a clean, dry area, protected from the weather and mechanical damage, properly stacked and spaced to permit air circulation and to prevent sticking of surfaces.

3.18 PRIMING JOINERY

Before priming preservative treated timber ensure that any cut surfaces have been retreated. Liberally coat end grain, allow to soak in and then recoat. Ensure LOSP. treated joinery has dried sufficiently to lose odour.

3.19 CONCEALED JOINERY SURFACES

Apply off-site coatings to all surfaces including those which will be concealed when incorporated into the building.

3.20 CONCEALED METAL SURFACES

Apply primer to suit the coating system to all metal surfaces which will be concealed when incorporated into the building.

3.21 DOORS

Prime or seal and paint all six faces of doors before hanging.

3.22 BEAD GLAZING

Before glazing apply the first two coats, or the primer and one undercoat, to rebates of stained, varnished or painted joinery and beads.

3.23 PUTTY GLAZING

Follow putty manufacturers recommendations for application, drying, and painting. Ensure that the putty is fully protected by the coating system as soon as it is sufficiently hard.

Application - generally

3.24 PAINTING GENERALLY

Comply with the paint manufacturer's requirements and any additional requirements in this specification.

3.25 MIXING

Thoroughly mix paints. Lift any settled pigment and ensure the paint is homogenous.

3.26 ENVIRONMENT

Paint exterior surfaces only in favourable weather conditions:

- warm dry days without frost or heavy dews
- avoid painting in direct sunlight any surfaces that absorb heat excessively
- as far as possible apply paint in the temperature range 15°C to 25°C
- do not paint if temperatures fall outside the range of 10°C and 35°C unless paints with the necessary temperature tolerance have been specified
- do not apply solvent borne paint if moisture is present on the surface

3.27 SEQUENCE OF OPERATIONS

Painting work to generally follow the following sequences:

- back painting and pre-installation painting, then post-installation exposed-face painting
- complete surface preparation before commencing painting
- apply paint in the specified sequence using the specified paint
- allow full drying time between coats to the paint manufacturer's requirements
- do not expose primers, undercoats and intermediate coats beyond manufacturers stated instructions before applying the next coat
- finish broad areas before painting trim
- ensure batch numbers of tins are matched for whole areas
- internally, paint ceilings before walls and walls before joinery, trim and other items

3.28 PAINT APPLICATIONS

Select brush, roller, or pad and apply paint to the requirements of the paint manufacturer and to obtain a smooth even coating of correct thickness, uniform gloss and colour.

3.29 DRYING TIME

Before handling or applying the next coat of paint, give each coat the full drying time as required by the paint manufacturer. Ensure that surfaces are dry and that condensation does not occur before the paint reaches surface-dry condition.

3.30 LIGHTLY SAND

Lightly sand primers, sealers, undercoats and intermediate coats to remove dust pick-up, protruding fibres and coarse particles. Remove dust immediately before applying the next coat.

3.31 DEFECTIVE WORK

Correct defective work immediately and re-coat as required, following precisely the paint system specified.

3.32 EACH COAT

Each coat of paint and the completed paint system to have the following qualities and properties:

- uniform finish, colour, texture, sheen and hiding power
- the specified number of coats applied
- no blemishes such as runs, sags, crinkling, fat edges, entrained paint skins, hairs, dust, bare or starved patches, cracks, brush marks, ladder marks and blistering
- proper covering of corners, crannies, thin edges, cracks, end grain and other difficult places of application

Completion

3.33 CLEAN

Clean adjoining surfaces, glass and fittings of any paint contamination. Clean off glass indicators at completion of the building works. Clean glass inside and out to a shining finish.

3.34 CLEAN EQUIPMENT

Use the Manufacturer's environmental wash system for the cleaning of water-based paint and plasters from brushes, rollers, plastering or spray equipment to separate the solids from the water component for safe disposal.

3.35 LEAVE

Leave the whole of this work uniform in gloss and colour, of correct thickness, free from painting defects, clean and unmarked and to the standard required by following procedures.

3.36 REMOVE

Remove dropsheets, coverings and masking to leave surrounding surfaces and areas clean, tidy and undamaged. Remove debris, unused materials and elements from the site.

3.37 REPLACE HARDWARE

Replace hardware without damage to it or the adjoining surface. Leave properly fitted and in working order.

4 SELECTIONS

4.1 SELECTIONS

Refer to 6711 PAINTING EXTERIOR and 6721 PAINTING INTERIOR for selections.

6711 PAINTING EXTERIOR

1 GENERAL

This section relates to the preparation of exterior unpainted and pre-painted surfaces, and the application of exterior:

- decorative paint coatings
- protective paint coatings
- sealers
- stains
- clear finishes

Related work

1.1 RELATED SECTIONS

Refer to 6700 PAINTING GENERAL for general painting matters.
Refer to 6721 PAINTING INTERIOR for interior paint systems.

Documents

Warranties

1.2 WARRANTY

Warrant this work under normal environmental and use conditions against failure.
2 years: Warranty period

Refer to the general section for the required form of 1237WA WARRANTY AGREEMENT and details of when completed warranty must be submitted.

2 PRODUCTS

2.1 PRODUCTS

Refer to 6700 PAINTING GENERAL for product clauses.

3 EXECUTION

3.1 EXECUTION

Refer to 6700 PAINTING GENERAL for execution clauses.

4 SELECTIONS

4.1 BACK PAINTING SCHEDULE

Refer to Client and Manufacturer Specifications.

Paint systems

4.2 TIMBER / PLYWOOD - STAIN / CLEAR FINISH

Refer to Client and Manufacturer Specifications.

4.3 CONCRETE / BLOCKWORK / FIBRE CEMENT / CEMENT PLASTER

Refer to Client and Manufacturer Specifications.

6721 PAINTING INTERIOR

1 GENERAL

This section relates to the preparation of interior unpainted and pre-painted surfaces, and the application of interior:

- decorative paint coatings
- protective paint coatings
- sealers
- stains
- clear finishes

Related work

1.1 RELATED SECTIONS

Refer to 6700 PAINTING GENERAL for general painting matters.
Refer to 6711 PAINTING EXTERIOR for exterior paint systems.

Warranties

1.2 WARRANTY

Warrant this work under normal environmental and use conditions against failure.
2 years: Warranty period

Refer to the general section for the required form of 1237WA WARRANTY AGREEMENT and details of when completed warranty must be submitted.

2 PRODUCTS

2.1 PRODUCTS

Refer to 6700 PAINTING GENERAL for product clauses.

3 EXECUTION

3.1 EXECUTION

Refer to 6700 PAINTING GENERAL for execution clauses.

4 SELECTIONS

4.1 BACK PAINTING SCHEDULE

Refer to Client and Manufacturer Specifications.

Paint systems

4.2 PLASTERBOARD

Refer to Client and Manufacturer Specifications.

4.3 PLASTERBOARD - WET AREA

Refer to Client and Manufacturer Specifications.

© CIL Masterspec Jun 2021

7112 WATER STORAGE TANKS

1 GENERAL

This section relates to the installation of water storage tanks for potable or non-potable water.

1.1 RELATED SECTIONS

Refer to 7430 DRAINAGE for general requirements
Refer to 7411 RAINWATER SPOUTING SYSTEMS for downpipe installation
Refer to electrical section/s for electrical connections

Documents

1.2 DOCUMENTS

Refer to the general section 1233 REFERENCED DOCUMENTS. The following documents are specifically referred to in this section:

NZBC B1/AS1	Structure
NZBC E1/AS2	Surface water
NZBC G1/AS1	Personal hygiene
NZBC G2/AS1	Laundering
NZBC G3/AS1	Food preparation and prevention of contamination
NZBC G12/AS1	Water Supplies
NZBC G13/AS1	Foul water
NZBC G13/AS3	Foul water
AS/NZS 1260	PVC-U pipes and fittings for drain, waste and vent application
AS/NZS 1546.1	On-site domestic wastewater treatment units - septic tanks
AS 2070	Plastic materials for food contact use
AS/NZS 2845.1	Water supply - Mechanical backflow prevention devices - materials, design and performance requirements
AS/NZS 3000	Electrical installations (Known as the Australian/New Zealand Wiring Rules)
AS/NZS 3500.1	Plumbing and drainage - water services
AS/NZS 3500.2	Plumbing and drainage - sanitary plumbing and drainage
AS/NZS 3500.3	Plumbing and drainage - stormwater drainage
AS/NZS 4020	Testing of products for use in contact with drinking water
AS/NZS 4130	Polyethylene (PE) pipes for pressure applications
AS/NZS 4671	Steel for the reinforcement of concrete
AS/NZS 4766	Polyethylene storage tanks for water and chemicals
NZS 3104	Specification for concrete production
NZS 3106	Design of concrete structures for the storage of liquids. - SPONSORED
NZS 3109	Concrete construction
NZS 7601	Specification for polyethylene pipe (Type 3) for cold water services
NZS 7602	Specification for polyethylene pipe (Type 5) for cold water services
NZS 7610	Specification for blue polyethylene pipes up to nominal size 63 for below ground use for potable water
HB 230	MPMSAA Rainwater Tank Design and Installation Handbook (Standards Australia)
HE4602	Household water supplies: The selection, operation, and maintenance of individual household water supplies
HE10148	Water collection tanks and safe household water (Ministry of Health)
SNZ PAS 4509	New Zealand Fire Service Firefighting Water Supplies Code of Practice
Ministry of Health	Guidelines for drinking-water quality management for New Zealand

Electricity (Safety) Regulations 2010 (Reprint as at 21 January 2019).

Documents listed above and cited in the clauses that follow are part of this specification. However, this specification takes precedence in the event of it being at variance with the cited document.

1.3 MANUFACTURER'S DOCUMENTS

Manufacturer's and supplier's documents relating to work in this section are:
Devan Installation & Maintenance Guide

Web:	www.devan.co.nz
Email:	info@devan.co.nz
Telephone:	0800 466 203
Facsimile:	+64-7 577 0437

Requirements

1.4 HEALTH REQUIREMENTS

Refer to HE4602 for guidance.

1.5 QUALIFICATIONS GENERALLY

Refer to 1270 CONSTRUCTION for requirements relating to qualifications.

Performance

1.6 DESIGN AND INSTALLATION

To HB 230 Rainwater Tank Design and Installation Handbook, to AS/NZS 3500.1, AS/NZS 3500.3 (as modified by NZBC E1/AS2) and to NZBC G1/AS1 and NZBC G12/AS1.

1.7 TESTING OF PRODUCTS

Materials used in the manufacture of rainwater tanks to be tested to AS/NZS 4020.

2 PRODUCTS

Components

2.1 ABOVE GROUND WATER STORAGE TANK

Tank generally to NZBC G12/AS1, AS/NZS 3500.1, section 2 and 8, AS/NZS 4020 and:

- Above ground tank manufactured from polyethylene to AS/NZS 4766 and to AS 2070.
- Above ground tank manufactured from precast concrete to NZS 3104, NZS 3106, NZS 3109 and AS/NZS 4671.
- Above ground tank manufactured from precast ferro-cement or reinforced plaster to AS/NZS 1516 and AS/NZS 4671.
- Above ground tank manufactured from hot dip galvanized corrugated steel sheet to AS 1445. Internal surface coated with food-grade polymer film.

Tanks to be fitted with a secure fitting lid to provide internal access for cleaning or inspection.

Accessories

2.2 TANK FITTINGS

Fittings kit supplied with the tank for complete installation.

2.3 PVC-U PIPES AND FITTINGS

Unplasticised PVC pipe and fittings to AS/NZS 1260.

2.4 POLYETHYLENE PIPES AND FITTINGS

High density polyethylene pipe and fittings to AS/NZS 4130.

2.5 WATER PRESSURE PUMP

Pump designed to pressurise water supply from tank into the building.

2.6 TANK VENT

Vent with insect proof stainless steel mesh fitted on top of the tank.

2.7 FIRST FLUSH WATER DIVERTER

Wall mounted or underground system specific to installation. To prevent the first flow of water from the roof entering the water storage tank.

2.8 FILTER SYSTEM

Inline cartridge filter housing fitted between the first flush diverter and the inlet, or a 955 micron filter tank screen system fitted within the tank.

2.9 TANK VACUUM SYSTEM

Designed to suck from the bottom of the tank when the tank is full to overflowing. System to include anti siphon device.

2.10 WATER TREATMENT (UV)

Combination filtration and UV disinfection system.

2.11 SEALS

Uniseals for pipe connections to the top of the tank.

3 EXECUTION

Conditions

3.1 SITE ACCESS

Transportation on site to the position of the tank is at the risk and responsibility of the contractor. Make provision for manoeuvring and unloading of tank.

Installation - site

3.2 SITE EXCAVATION FOR ABOVE GROUND TANK

Select level site, free of sharp protrusions. Form solid pad with a bed of sand or concrete, screeded level to a minimum depth of 50mm. Extend pad minimum 500mm past base of tank. On a sloping site excavate fully into bank and provide minimum 600mm clearance from the tank to the base of the cut. Do not place tank on any fill, over in ground pipes, cables or underground structures.

3.3 INSTALL ABOVE GROUND TANK

Position tank on the prepared compacted level base or level platform. Fit seismic restraint straps as directed by structural engineer.

3.4 LAYING AND JOINTING

Lay in straight lines between changes of line or grade from the lower end of the drain with sockets pointing uphill. Set each pipe true to line and grade and each joint completed before the next pipe is laid.

Installation - fittings

3.5 WATER PUMP INSTALLATION

Install pump on a solid base bolted down through base plate. Place weather tight housing over the pump and secure to base. Connect to water supply and power supply.

3.6 WATER TREATMENT SYSTEM INSTALLATION

Install ultraviolet light radiation treatment unit between pump and house to manufacturer's specifications. Connect to power supply provided.

3.7 BACK FLOW PREVENTION DEVICES

Install to AS/NZS 2845.1, to AS/NZS 3500.1 and to NZBC G12/AS1.

Installation - connections

3.8 FIRST FLUSH WATER DIVERTER

Install either adjacent to the tank or underground, first flush water diverter. Connect downpipes from the roof gutter to the first flush water diverter. Connect the first flush diverter to the top of the tank. Refer to manufacturer's installation details.

3.9 FILTER INSTALLATION

Install proprietary in-line filter before the inlet connection.

3.10 INLET CONNECTION

Install inlet pipe into top of tank at manufacturer's designated mounting area using a Uniseal type connection.

3.11 OUTLET CONNECTION

Install pipe to manufacturer's installation details. To the outlet connect a floating arm draw-off to deliver water from 100mm below the surface. From the base connection run a flexible hose to the pump. Install ball valve in line between base connection and water pump. Support all pipework at outlet.

3.12 OVERFLOW PIPE

Install pipe to manufacturer's installation details and connect to approved discharge point or as detailed.

3.13 PIPE SEALS

Insert Uniseals in clean cut holes of the correct size. Insert Uniseal into hole with widespread facing the pipe to be inserted. Lubricate the pipe with detergent and push through the Uniseal. Use only on top of tank connections.

3.14 ELECTRICAL CONNECTION

Installation to Electricity (Safety) Regulations 2010, and AS/NZS 3000. Allow to connect up water pump and water treatment unit to the power supply as provided.

Completion & commissioning

3.15 POST INSTALLATION TESTING

Test and commission the completed system to manufacturer requirements and AS/NZS 3500.1, section 16.5 Testing and Commissioning a Rainwater System . At the completion and testing of the water service, check all valves and other components to confirm their correct performance.

4 SELECTIONS

Substitutions are not permitted to the following, unless stated otherwise.

4.1 RAINWATER STORAGE TANK

Manufacturer:	Devan
Tank material:	Medium density polyethylene
Capacity:	25,000 litres

7120 HOT & COLD WATER SYSTEM

1 GENERAL

This section relates to piped potable water supply systems from the network utility supply authority water main to designated points and appliances, the installation of hot water heating appliances, distributing piped hot water to other appliances, and the installation of valves.

1.1 RELATED WORK

Refer to 7151 SANITARY FIXTURES, TAPWARE & ACCESSORIES for sanitary fixtures and tapware selections.

Documents

1.2 DOCUMENTS

Refer to the general section 1233 REFERENCED DOCUMENTS. The following documents are specifically referred to in this section:

NZBC B2/AS1	Durability
NZBC C/AS1-AS2	Protection from fire
NZBC G4/AS1	Ventilation
NZBC G12/VM1	Water supplies
NZBC G12/AS1	Water supplies
NZBC H1/AS1	Energy Efficiency
AS/NZS 2492	Cross Linked Polyethylene (PE-X) pipe for pressure applications
AS/NZS 2537.2	Mechanical joining fittings for use with crosslinked Polyethylene (PE-X) for pressure applications - Plastics piping systems for hot and cold water installations - Crosslinked Polyethylene (PE-X) - Fittings
AS/NZS 2642.1	Polybutylene pipe systems - Polybutylene (PB) pipe extrusion compounds
AS/NZS 2642.2	Polybutylene pipe systems - Polybutylene (PB) pipe for hot and cold water applications
AS/NZS 2642.3	Polybutylene pipe systems - Mechanical jointing fittings for use with polybutylene (PB) pipes for hot and cold water applications
AS/NZS 2845.1	Water supply - Backflow prevention devices - Materials, design and performance requirements
AS 2845.3	Water supply - Backflow prevention devices - Field testing and maintenance
AS/NZS 3500.1	Plumbing and drainage - Water services
AS/NZS 3500.4	Plumbing and drainage - Heated water services
NZS 3501	Specification for copper tubes for water, gas and sanitation
AS/NZS 4130	Polyethylene (PE) pipes for pressure applications
NZS 4305	Energy efficiency domestic type hot water systems
NZS 4602	Low pressure copper thermal storage electric water heaters
NZS 4607	Installation of thermal storage electric water heaters: valve-vented systems
NZS 4617	Tempering (3-port mixing) valves
AS/NZS 5601.1	Gas installations - general installations
DIN 8077	Polypropylene (PP) Pipes - PP-H, PP-B, PP-R, PP-RCT - Dimensions
DIN 8078	Polypropylene (PP) Pipes - PP-H, PP-B, PP-R, PP-RCT - General quality requirements and testing.

Gas (Safety and Measurement) Regulations 2010
Plumbers, Gasfitters and Drainlayers Act 2006
NZ Backflow Testing Standard: NZ Backflow Testing Standard 2011, Field testing of backflow prevention devices and verification of air gaps

Warranties

1.3 WARRANTY

Provide warranty for:
2 years: For the supply and installation of the plumbing system and fixtures

- Provide the warranty in the standard form in the general section 1237WA WARRANTY AGREEMENT.
- Commence the warranty from the date of practical completion of the contract works.

Requirements

1.4 QUALIFICATIONS

Plumbers to be experienced competent workers, familiar with the materials and the techniques specified. Carry out all work under the direct supervision of a certifying plumber under the Plumbers, Gasfitters and Drainlayers Act 2006.

1.5 HOT WATER TEMPERATURES

To NZBC G12/AS1, 6.14

Storage water heaters to store water at not less than 60ºC.

Hot water piping system, with temperature controls where necessary (tempering valve etc), to provide water at the outlet at the following temperatures:

For personal hygiene fixtures (showers, baths, wash hand basins etc) temperatures to be close to but not to exceed:

- 45ºC - for early child hood centres, schools, elderly facilities, hospitals, psychiatric or disabled institutions.
- 55ºC - for personal hygiene fixtures in all other buildings.

For non-personal hygiene fixtures (kitchen sinks and equipment, laundry tubs, cleaners sinks, industrial fixtures etc) temperatures are:

- Unrestricted - direct from water heater, approx. 60°C, must be less than 65°C (for kitchen sinks and equipment, laundry tubs, cleaners sinks etc) - in all buildings.
- Unrestricted - direct from water heater not tempered (for industrial fixtures and specific items etc) - in all buildings.

This clause excludes boiling units.

Performance

1.6 TESTING - TO NZBC G12/AS1

Test to NZBC G12/AS1, 7.5, **Watertightness**, for hot and cold water.

- Test to a pressure of1500 kpa for period not less than 15 minutes.

Confirm the timing before carrying out any tests. Supply potable water and the apparatus needed. Slowly fill service pipes with water to exclude air. Test and ensure there is no measurable loss of pressure for the minimum period. Slowly fill distribution pipes with water to exclude air. Ensure that with draw-off taps closed the system must remain water-tight.

1.7 GAS CERTIFICATE OF COMPLIANCE

Provide a Certificate of Compliance (CoC) as required by the Gas (Safety and Measurement) Regulations 2010 to the owner, and when required provide a copy to the energy supplier before connection.

1.8 GAS SAFETY CERTIFICATION

Provide a Gas Safety Certificate (GSC) as required by the Gas (Safety and Measurement) Regulations 2010 and provide a copy to the owner and when required the BCA. To be provided at completion of the work, prior to Practical Completion.

1.9 GAS APPLIANCE COMPLIANCE

Supplier to provide a Supplier Declaration of Compliance (SDoC) in accordance with the requirements of the Gas (Safety and Measurement) Regulations 2010.

2 PRODUCTS

Materials

2.1 COPPER PIPE

To NZS 3501 complete with copper-alloy compression fittings or crox type joints and seal ring compression joints complete with fittings and accessories brand matched to the pipe manufacturer's requirements with durability to NZBC B2/AS1, Table 1 and NZBC G12/AS1, Table 1.

2.2 POLYETHYLENE PIPE

To AS/NZS 4130 Series 1 complete with fittings and accessories brand matched to the pipe manufacturer's requirements with durability to NZBC B2/AS1, table 1 and NZBC G12/AS1, table1. Except for solid black PE, protect from sunlight.

2.3 WATER METER

To the requirements of the network utility operator.

2.4 VALVES

Pressure reducing or limiting valve, filter, non-return valve, cold water expansion valve, pressure relief or temperature valve, pressure relief valve and isolating valves to NZBC G12/AS1.

2.5 TEMPERING VALVE

Tempering valve to NZS 4617 to NZBC G12/AS1.

Materials - Hot water heating appliances

2.6 ELECTRIC HOT WATER CYLINDER, MAINS PRESSURE

To NZS 4305, ceramic-coated steel thermal storage cylinder, insulated and complete with required fittings.

Components

2.7 INSULATION

Pre-formed pipe sections complete with bends and fittings, with fixing tape to the manufacturer's requirements and to NZBC H1/AS1.

2.8 PROTECTIVE TAPE

Plasticised PVC tape system with primer, mastic fixing and outer coating.

3 EXECUTION

3.1 EXECUTION GENERALLY

Generally carry out the whole of this work and tests to NZBC G12/VM1 or NZBC G12/AS1.

3.2 HANDLE AND STORE

Handle and store pipes, fittings and accessories to avoid damage. Store on site, under cover on a clean level area, stacked to eliminate movement and away from work in progress.

Store tapware in a shelved, dry and securely locked area. Retain tapware in the manufacturer's original packaging, complete with all fixings and installation instructions. Label each unit separately with its space/fixture number to match.

3.3 CORE HOLES AND SLEEVES

Review location and fit core holes and sleeves as needed throughout the structure in conjunction with the boxing, reinforcing and placing of concrete. Strip core holes and make good after installation of pipework.

3.4 CONCEAL

Conceal pipework within the fabric of the building unless detailed otherwise. Satin finish chrome plate exposed work, complete with matching ferrule at the surface penetration.

3.5 CORROSION

Separate all metals subject to electrolytic action from each other and from treated timber, concrete and other lime substances by space, painting of surfaces, taping, or separator strips.

3.6 THERMAL MOVEMENT

Accommodate movement in pipes resulting from temperature change by the layout of the pipe runs, by expansion joints and by sleeving through penetrations.

3.7 PIPE SIZE

Flow rates to each outlet to be no less than those given in NZBC G12/VM1 or NZBC G12/AS1, table 3, Acceptable flow rates to sanitary fixtures. Pipe size as determined in NZBC G12/AS1, table 4, Tempering valve and nominal pipe diameters.

3.8 ELECTROLYTIC ACTION

Avoid electrolytic action by eliminating contact or continuity of water between dissimilar metals.

3.9 EXCAVATE

Excavate for the water main to a firm, even trench base in straight runs. Allow to backfill.

Application - Jointing

3.10 JOINTING COPPER PIPE

Braze pipe, fit alloy compression fittings, crox type joints and seal ring compression joints to NZBC G12/AS1.

3.11 JOINTING POLYETHYLENE PIPE

Seal ring compression joints and electrofusion to NZBC G12/AS1.

Application - Pipework installation

3.12 WATER SUPPLY CONNECTION

Arrange with the network utility operator for a connection to the water main and from there through a water meter and gate valve. Provide back flow prevention to NZBC G12/AS1.

3.13 POTABLE WATER SUPPLY PIPEWORK INSTALLATION

From connection point, run pipes complete with all fittings, support and fixing, joins and install to manufacturers specifications. Size the pipes and branches in straight runs to deliver the acceptable flow rate to NZBC G12/VM1 or NZBC G12/AS1, table 3, Acceptable flow rates to sanitary fixtures at each outlet. Allow for the expected concurrent use of adjoining fixtures and size the piping layout to eliminate loss of pressure at any point by simultaneous draw-off. Pipework support spacing to be firmly fixed and buffered to eliminate noise and hammer, with preformed tee-connection take-offs and branches, with machine made 3 diameter bends, complete with necessary valves and fittings. Conceal pipework and pressure test before the wall linings are fixed.

3.14 HOT WATER PIPEWORK

Use a take-off spigot to give separate branches to each fitting, lay out pipes with support spacing to NZBC G12/VM1 or NZBC G12/AS1, table 7 Water supply pipework support spacing. Fix firmly and buffer to eliminate noise and hammer, with preformed tee-connection take-offs and branches, and preformed 3 diameter bends, complete with all necessary valves and fittings

Lag all pipes with rigid insulation to the manufacturer's requirements and G12/VM1 or G12/AS1.

3.15 EQUIPOTENTIAL BONDING METALLIC WATER SUPPLY PIPES

If it is an electrical requirement, before enclosing, ensure metallic water supply pipes and metallic sanitary fixtures are equipotential bonded (or at least conductor cable attached) to NZBC G12/AS1, 9.0.

3.16 IN-LINE FILTER

Install an in-line filter immediately adjacent to the main isolating valve at the point of entry to the building, in an accessible position to allow for easy cleaning.

Application - Hot water systems

3.17 SEISMIC RESTRAINTS - NON-GAS WATER HEATING APPLIANCES

Non-gas (electric, wet-back, solar etc) water heating appliances (storage water heaters) to be restrained to manufacturer's requirements and NZBC G12/AS1, 6.11, Water Heater Installation.

3.18 INSTALLING HOT WATER PIPE INSULATION

Insulate all hot water pipes to NZBC H1/AS1 Energy Efficiency, AS/NZS 3500.4, section 8.2 Thermal insulation, and to the insulation manufacturer's instructions. Cut insulation sections tight between timber framing and tight between the webs of steel studs.

3.19 INSTALL ELECTRIC HOT WATER CYLINDERS AND BOILING CYLINDERS

Install where shown complete with all the necessary fittings to the cylinder manufacturer's requirements and in accordance with NZBC G12/AS1: 6.11. Valve-vented systems to NZS 4607.

3.20 INSTALL STORAGE HOT WATER CYLINDER OVERFLOW TRAY

Install drained overflow tray to storage hot water cylinder to NZBC G12/AS1.

3.21 INSTALL TEMPERING VALVE

Install 1 metre minimum from outlet of hot water cylinder and to manufacturer's instructions. Install copper pipework for 1 metre minimum downstream of tempering valve prior to connection of non-metallic pipework.

3.22 PENETRATIONS

Provide and fit collars and escutcheon plates to match the pipework at all penetrations through constructions.

3.23 INSTALLING BELOW GROUND ISOLATING VALVE

Install all below ground items such as main isolating valves and water meters in preformed concrete pits or approved equivalent.

3.24 INSTALLING APPLIANCE ISOLATING VALVES - CONCEALED

Install isolating valves for appliances in accessible positions. Locate in adjacent cupboards and position to allow for easy connection and operation.

Completion

3.25 LABEL

Label all pipework with permanent adhesive markers at 3 metre minimum intervals.

3.26 CLEAN IN-LINE FILTER

Clean all in-line filters on completion of works.

3.27 REPLACE

Replace damaged or marked elements.

3.28 LEAVE

Leave work to the standard required by following procedures.

3.29 REMOVE

Remove debris, unused materials and elements from the site.

4 SELECTIONS

Water main

4.1 POLYETHYLENE WATER MAIN

Size:	25mm outside diameter (i.e. DN 25 in AS/NZS 4130)

Pipework

4.2 COPPER PIPE

Manufacturer:	Refer to Client and Manufacturer Specifications.
Brand:	Refer to Client and Manufacturer Specifications.

4.3 EXPOSED PIPES

Manufacturer:	Refer to Client and Manufacturer Specifications.
Type:	Refer to Client and Manufacturer Specifications.

Hot water systems

4.4 ELECTRIC HOT WATER CYLINDER, MAINS PRESSURE

Brand:	Rheem
Model size:	180L

7151 SANITARY FIXTURES, TAPWARE & ACCESSORIES

1 GENERAL

This section relates to the supply and installation of sanitary fixtures, tapware and sanitary accessories.

1.1 RELATED WORK

Refer to 7120 or 7123 HOT AND COLD WATER SYSTEM for hot water cylinders.
Refer to 7420 or 7421 SANITARY SYSTEMS for the supply and fitting of waste disposal pipework
Refer to the electrical section/s for electrical connection of accessories.

Documents

1.2 DOCUMENTS

Refer to the general section 1233 REFERENCED DOCUMENTS. The following documents are specifically referred to in this section:

NZBC E3/AS1	Internal moisture
NZBC F2/AS1	Hazardous building materials
NZBC G1/AS1	Personal hygiene
NZBC G12/VM1	Water supplies
NZBC G12/AS1	Water supplies
NZBC G13/AS1	Foul water
NZBC G13/AS3	Plumbing and drainage
AS/NZS 1730	Washbasins
AS/NZS 2023	Baths for ablutionary purposes
AS/NZS 3500.1	Plumbing and drainage - water services
AS/NZS 3500.2	Plumbing and drainage - sanitary plumbing and drainage
AS/NZS 3662	Performance of showers for bathing
NZS 4223.3	Glazing in buildings - Human impact safety requirements
Plumbers, Gasfitters and Drainlayers Act 2006	

Documents listed above and cited in the clauses that follow are part of this specification. However, this specification takes precedence in the event of it being at variance with the cited document.

Requirements

1.3 QUALIFICATIONS

Plumbers to be experienced competent workers, familiar with the materials and the techniques specified. Carry out all work under the direct supervision of a Certifying Plumber under the Plumbers, Gasfitters and Drainlayers Act 2006.

1.4 SUPPLIER

A specialist in the supply of tapware, and employing experienced architectural representatives available to assist during the course of the installation.

2 PRODUCTS

2.1 SANITARY FIXTURES

Refer to SELECTIONS for product selection.

2.2 TAPWARE

Refer to SELECTIONS for product selection.

2.3 SANITARY APPLIANCES

Refer to SELECTIONS for product selection.

2.4 SANITARY ACCESSORIES

Refer to SELECTIONS for product selection.

2.5 ELECTRICAL SANITARY ACCESSORIES

Refer to SELECTIONS for product selection.

3 EXECUTION

Conditions - sanitary fixtures

3.1 DELIVERY

Only deliver to the site fixtures or fittings that can be immediately unloaded into suitable storage or be placed for direct installation.

3.2 STORAGE AND HANDLING

Take delivery of and store components complete with protective casings and coverings in areas that are enclosed, clean and dry and where no work is being done. Remove protection only to the extent that will allow installation.

3.3 QUALITY STANDARDS INCLUDING AS/NZS 3500.2

Installation work to comply with NZBC G1/AS1, NZBC G12/VM1, NZBC G12/AS1, AS/NZS 3500.2, as modified by NZBC G13/AS3, and the fixture manufacturer's requirements.

3.4 SUBSTRATE

Ensure substrate and fixings will allow work of the specified standard.

3.5 CO-ORDINATION

Do not proceed if the points of supply and drainage services do not match the points of the fixtures without force or distortion.

3.6 INSTALLATION REQUIREMENTS INCLUDING AS/NZS 3500.2

Install to NZBC G1/AS1, NZBC G12/VM1, NZBC G12/AS1, NZBC E3/AS1, AS/NZS 3500.2, as modified by NZBC G13/AS3, and to the fixture manufacturer's installation requirements for each component. Carry out preparatory and assembly work, including connections to supply and drainage services and the application of slurries and sealants in sequence.
Seal between all sanitary fixtures and floors, wall linings, fixtures and the tops they are in, the tops and wall linings, to NZBC E3/AS1, 3.2. Fixtures include toilets, urinals, baths, basins, tubs or sinks. Tops include, vanities, bath surrounds, sink benches, etc, and there upstands.

3.7 PROVIDE SUPPORT

Confirm fixing points needed for each unit and provide solid blocking at each fixing bracket location.

Conditions - tapware

3.8 RETAIN

Retain tapware in the manufacturer's original packaging and ensure that units are complete with fixings and installation instructions. Label each unit separately with its fitting name and space number.

3.9 STORE

Store tapware packages in a shelved, dry and securely locked area. Provide supervision when the secure area is unlocked and packages and cartons are being distributed; signing off each package from the schedule as released.

Conditions - sanitary accessories

3.10 RETAIN

Retain fixtures, fittings and hardware in the manufacturer's original packaging and ensure that units are complete with associated fixings and installation instructions. Label each unit separately to match the submitted and approved schedule.

3.11 PACKAGE

Package fixtures, fittings and hardware units required in clear plastic and label each to match the drawings and the submitted schedule. Place packages in cartons selected for 'level', 'location', and/or 'sector' and label the packages and the cartons similarly.

3.12 STORE

Store items in a shelved, dry and securely locked area. Provide supervision when the secure area is unlocked and packages and cartons are being distributed; signing off each package from the schedule as released.

3.13 INSPECTION

Before starting the installation of proprietary items, check relevant spaces and wall and floor finishes for any condition that would not allow the proper installation of any unit. Do not proceed until such conditions have been remedied.

Installation - sanitary fixtures

3.14 INSTALLING TOILET PAN

Carry out preparatory and assembly work, including connections to supply and drainage services and the application of slurries/bedding and sealants in sequence. Fit the toilet pan in position, plumb, level, flush and rigid without stressing the attachment points of the component. Fixings to be corrosive resistant. Fit seat.

3.15 INSTALLING CISTERNS

Fit firmly in place and connect the specified cisterns from the supply services through the flush pipes to the relative fixtures in the positions as detailed all plumb and level.

Installation - Basins

3.16 INSTALLING WASHBASINS

Install to NZBC G1/AS1, AS/NZS 1730. Set basins firmly to walls or vanities as detailed and to comply with NZBC E3/AS1. Connect to supply and drains through trap to the drainage system.

3.17 INSTALLING VANITIES - BLANK TOP

Install in accordance with the manufacturer's requirements. Cut out basin profile to basin manufacturer's template. Make penetrations for supply and drainage. Fix securely with corrosive resistant fixings. Seal top and upstand to wall surface to comply with NZBC E3/AS1.

Installation - Showers

3.18 INSTALLING SHOWER FITTINGS

Shower waste, mixer and rose to be install to NZBC G1/AS1 and to AS/NZS 3662. Seal shower wall lining penetrations (shower head, shower hose, mixer, taps etc) to NZBC E3/AS1, Fig. 6.

3.19 INSTALLING PROPRIETARY SHOWER CUBICLE

Install to NZBC G1/AS1 and to AS/NZS 3662 and in accordance with shower manufacturer's details and requirements. Ensure that doors fit closely and accurately. Test for water egress around sides and base. Lining materials and finishes to comply with NZBC E3/AS1.

3.20 INSTALLING PROPRIETARY SHOWER ENCLOSURES AND WALL LININGS

Install in accordance with NZBC E3/AS1. Sit tray firmly in place as detailed, to levels shown and connect to drainage service, ready for following work. Fit screen and door unit to manufacturer's details. Lining materials and finishes to comply with NZBC E3/AS1.

3.21 INSTALLING SHOWER DOOR AND SCREEN

To NZS 4223.3 and to the product manufacturer's requirements. Set units level, plumb and true to line and required location, with moving parts and actions freely and easily operating.

Installation - Baths

3.22 INSTALLING BATHS

Install to NZBC G1/AS1. Set firmly in cradle with required points fully supported, level and flush. Connect to supply and drainage services.

Installation - Sinks

3.23 INSTALLING SINK BENCHES

Install in accordance with manufacturer's/supplier's requirements. Connect to supply and drainage services.

3.24 INSTALLING CLEANERS SINKS AND TUB UNITS

Install in accordance with manufacturer's requirements. Connect to supply and drainage services.

Installation - Miscellaneous

3.25 INSTALLING STAINLESS STEEL FIXTURES

Carry out preparatory work and fit elements in position plumb, level, flush and rigid without stressing the attachment points in sequence. Connect to supply and drainage services.

Application - tapware

3.26 GENERAL

To AS/NZS 3500.1 and in accordance with the manufacturer's requirements. Maintain safe water temperatures to comply with NZBC G12/AS1.

Application - sanitary accessories

3.27 INSTALLING ACCESSORIES

Fit specified fittings firmly in place at required dimensions relative to floor and adjoining sanitaryware fittings, all plumb and level.

3.28 LOCATE

Locate units at heights and/or locations shown on the drawings, or as required to comply with NZBC G1/AS1. For any dimension not shown or known, request direction before proceeding.

3.29 CUTTING AND FITTING

Where cutting and fitting of the substrate is necessary for installing any unit, carry out this work before the painting or finishing of that surface. Remove any hardware when required for painting, placing it in the packaging or carton originally supplied and returning it to the secure store until ready for re-installation.

3.30 INSTALLING UNITS

Install each unit in accordance with the proprietary fixture manufacturer's requirements, using the templates and tools supplied or recommended by them. Set units level, plumb and true to line and required location, with moving parts and actions freely and easily operating. Do not make any modifications to supplied units.

Completion

3.31 REPLACE

Replace damaged or marked elements.

3.32 PROTECTIVE COVERINGS

Leave fixtures, fittings and accessories clean and unblemished with stickers and protective coverings removed, with supply and drainage connections and all parts fully operating and working. Leave the whole of this work free of blemishes, undamaged and to the standard of finish required for following work.

3.33 REMOVE

Remove debris, unused materials and elements from the site.

4 SELECTIONS

4.1 TOILET

Refer to Client and Manufacturer Specifications.

4.2 BASIN

Refer to Client and Manufacturer Specifications.

4.3 VANITY UNIT - BLANK TOP

Refer to Client and Manufacturer Specifications.

4.4 SHOWER ENCLOSURE

Refer to Client and Manufacturer Specifications.

4.5 SHOWER CUBICLE

Refer to Client and Manufacturer Specifications.

4.6 BATH

Refer to Client and Manufacturer Specifications.

4.7 KITCHEN SINK BOWL

Refer to Client and Manufacturer Specifications.

4.8 LAUNDRY TUB

Refer to Client and Manufacturer Specifications.

4.9 TAPWARE - MISCELLANEOUS

Refer to Client and Manufacturer Specifications.

4.10 SANITARY APPLIANCES

Refer to Client and Manufacturer Specifications.

4.11 SANITARY ACCESSORIES

Refer to Client and Manufacturer Specifications.

4.12 ELECTRICAL SANITARY ACCESSORIES

Refer to Client and Manufacturer Specifications.

7411 RAINWATER SPOUTING SYSTEMS

1 GENERAL

This section relates to rainwater disposal systems including spouting and downpipes in:

- metal
- PVC

1.1 RELATED WORK

Refer to 4311 Profiled Metal Roofing.
Refer to 7430 Drainage.

1.2 ABBREVIATIONS AND DEFINITIONS

Refer to the general section 1232 INTERPRETATION & DEFINITIONS for abbreviations and definitions used throughout the specification.

BMT	Base metal thickness
NZMRM	New Zealand Metal Roofing Manufacturers Inc
Spouting	Roof gutter bracketed off the roof edge or fascia.
Gutter	Internal gutter or gutter formed as integral part of the roof fabric.

Documents

1.3 DOCUMENTS

Refer to the general section 1233 REFERENCED DOCUMENTS. The following documents are specifically referred to in this section:

NZBC E1/AS1	Surface water
NZBC E1/AS2	Surface water
AS 1273	Unplasticised PVC (uPVC) downpipe and fittings for rainwater
AS/NZS 3500.3	Plumbing and drainage - Stormwater drainage
NZMRM CoP	NZ Metal Roof and Wall Cladding Code of Practice

Warranties

1.4 WARRANTY - MANUFACTURER/SUPPLIER

Warrant this work under normal environmental and use conditions:

10 Years	For failure of coating adhesion
10 Years	For weatherproofing by material penetration

Form:	Manufacturer's standard warranty form
From:	Commence the warranty from the date of completion of installation

Refer to the general section 1237 WARRANTIES for details of when completed warranty must be submitted.

1.5 WARRANTY - INSTALLER/APPLICATOR

Warrant this work under normal environmental and use conditions against:

3 years:	For weatherproofing by substandard workmanship:
From:	Commence the warranty from the date of completion of installation
Form:	Installers standard warranty form

Refer to the general section 1237 WARRANTIES for details of when completed warranty must be submitted.

Requirements

1.6 QUALIFICATIONS

Work to be carried out by trades people experienced, competent and familiar with the materials and techniques specified.

Performance

1.7 TEST

Test the completed rainwater disposal system with water to ensure spoutings are laid to correct falls, that both spouting and downpipes are unobstructed and that no ponding occurs in spoutings.

2 PRODUCTS

Materials - metal

2.1 SPOUTING

Complete with matching brackets to suit spouting and screws. Refer to SELECTIONS for type.

2.2 SPOUTING BRACKETS

All exposed brackets to be colour matched before installation. Brackets to be hot-dipped galvanised, zincalume, aluminium, stainless steel or brass as specified and to suit application. Electroplated components are not acceptable. Refer to SELECTIONS for type.

2.3 DOWNPIPES

Complete with stand-off brackets, screw fixed. Refer to SELECTIONS for type.

Components

2.4 DROPPERS

Metal or uPVC droppers, compatible with spouting material and sized to fit inside the downpipe.

2.5 FASTENERS GENERALLY

Minimum Class 4 durability and not less than the roofing material being fixed.

2.6 RIVETS

Sealed aluminium, minimum diameter 4mm.

2.7 SEALANT

MS Polymer sealant.

3 EXECUTION

Conditions

3.1 HANDLE AND STORE

Handle and store downpipes, spouting and accessories to avoid damage. Store on site under cover, on a clean level area, stacked to eliminate movement and away from work in progress. Avoid exposure to sunlight if strippable film is still on the product.

3.2 SUBSTRATE

Check that fascias, barges or cladding are level and true to line and face and will allow work of the required standard without distortion to the product alignment. Do not proceed until they are up to standard.

3.3 THERMAL MOVEMENT

Make adequate provision in the fixing and jointing of the spouting for thermal movement in the length of the spouting. Provide an expansion joint in spouting over 18 metres in length for steel gutter.

3.4 CORROSION

Separate metals subject to electrolytic action from each other and from treated timber, concrete and other lime substances by space, painting of surfaces, taping, or separator strips. Do not allow copper downpipes to discharge onto lower galvanized or zinc aluminium coated steel roofs.

Application - metal

3.5 INSTALLATION GENERALLY

Install to NZMRM CoP recommendations where not otherwise specified.

3.6 INSTALL VALLEY GUTTERS

Attach valley gutters to valley boards by clips allowing for thermal movement to NZMRM CoP, clause 5.6, **Valley Gutters**. Separate valley gutter from valley boards with a layer of bituminous roof underlay.

3.7 INSTALL SECRET GUTTERS

Install secret gutters to fall allowing for thermal movement to NZMRM CoP, clause 5.5.7 **Secret Gutters**. Rivet and seal joints with MS Polymer sealant.

3.8 INSTALL METAL SPOUTING

Establish minimum falls necessary (minimum 1:500, 2mm in 1 metre) to outlets to prevent ponding and screw fix brackets, true to line at 750mm centres maximum for external gutters less than 175mm wide and at 600mm centres maximum for gutters 175mm to 300mm wide. In areas where snow fall is possible the centres should be reduced to 600mm maximum. Lap spouting joints a minimum of 40mm, silicone seal between surfaces and pop rivet to the manufacturer's recommendations. Ensure the joint is fixed over its full girth. Cut out neatly for and fit the pre-formed downpipe dropper and rivet and seal around the joint. All installation to NZMRM CoP recommendations.

3.9 INSTALL PRE-PAINTED METAL SPOUTING

Establish minimum falls necessary (minimum 1:500, 2mm in 1 metre) to outlets to prevent ponding and screw fix brackets true-to-line at 750mm centres maximum for external gutters less than 175mm wide and at 600mm centres maximum for gutters 175mm to 300mm wide. In areas where snow fall is possible the centres should be reduced to 600mm maximum. Lap spouting joints a minimum of 40mm and silicone seal and pop rivet to the manufacturer's recommendations. Cut out neatly for and fit the pre-formed downpipe dropper and silicone seal around the lap joint. All installation to NZMRM CoP recommendations.

3.10 INSTALL DROPPERS

Install either 2 outlets or one outlet and an overflow to each spouting section. Cut out neatly for and fit the pre-formed downpipe dropper and rivet and seal around the joint. All installation to NZMRM CoP recommendations.

3.11 INSTALL METAL DOWNPIPES

Form downpipes complete with angle bends as needed with joints lapped and sealed. Screw fix with pipe clips to rigidly stand off the wall plumb and discharging into stormwater gully or inlet pipe. All installation to NZMRM CoP recommendations.

3.12 INSTALL OUTLETS AND OVERFLOWS

Install outlets and overflows where required to NZMRM CoP, clauses 5.8.2, **Outlets and Overflows.**

Completion

3.13 REPLACE

Replace damaged or marked elements.

3.14 LEAVE

Leave the whole of this work discharging completely and freely into the stormwater system and free of all debris. Leave work to the standard required by following procedures.

3.15 REMOVE

Remove debris, unused materials and elements from the site.

4 SELECTIONS

4.1 SPOUTING

Colorsteel Endura 150mm 1/4 round.

4.2 SPOUTING BRACKETS

Refer to Client and Manufacturing Specifications.

4.3 DOWNPIPES

Brand:	Marley
Profile/size:	RP80
Material:	uPVC
Colour:	Refer to Client Specifications.

4.4 DOWNPIPE BRACKETS

Type:	Refer to Client Specifications.
Material:	Refer to Client Specifications.

7420 SANITARY SYSTEMS

1 GENERAL

This section relates to above ground gravity flow sanitary systems;

- for foul water
- from sanitary fixtures to first underground drain connection
- including system wastes, floor wastes, floor waste gullies, traps, vents and valves
- with associated components and accessories to make the system work

1.1 RELATED SECTIONS

Refer to 7151 SANITARY FIXTURES, TAPWARE & ACCESSORIES for sanitary fixtures tapware and accessories.
Refer to 7430 DRAINAGE for underground drains.

1.2 DOCUMENTS

Documents referred to in this section are:

NZBC G1/AS1	Personal hygiene
NZBC G13/AS1	Foul water - Sanitary plumbing
NZBC G13/AS3	Foul water - Sanitary plumbing and drainage
AS 2887	Plastic waste fittings
AS/NZS 1260	PVC-U pipes and fittings for drain, waste and vent applications
AS/NZS 2032	Installation of PVC pipe systems
AS/NZS 3500.2	Plumbing and drainage - Sanitary plumbing and drainage

Plumbers, Gasfitters and Drainlayers Act 2006

1.3 QUALIFICATIONS

Carry out all work under the direct supervision of a certifying plumber under the Plumbers, Gasfitters and Drainlayers Act 2006.

2 PRODUCTS

2.1 PVC-U WASTE, DISCHARGE AND VENT PIPES

PVC-U pipe to AS/NZS 1260 complete with fittings brand-matched to the pipe manufacturer's requirements.

2.2 EXPOSED PIPES AND TRAPS

Chrome plate on copper pipes and associated copper and brass fittings.
White polybutylene or PVC, including all associated fittings.

3 EXECUTION

3.1 EXECUTION GENERALLY - AS/NZS 3500.2

Carry out this work to AS/NZS 3500.2, as modified by NZBC G13/AS3, and complete all tests to AS/NZS 3500.2, 15 **Testing of Sanitary Plumbing and Sanitary Drainage Installations.**

3.2 ELECTROLYTIC ACTION

Avoid electrolytic action by eliminating actual contact or continuity of water between dissimilar metals.

3.3 INSTALL TRAPS, WASTE AND VENT PIPES - AS/NZS 3500.2

Connect waste outlets to traps and run waste pipes and back vents concealed, sized and fixed to AS/NZS 3500.2, as modified by NZBC G13/AS3, and jointing to AS/NZS 2032. Discharge wastes into the drainage system stack, soil pipe, or gully trap as shown. Bird proof mesh to all roof vents and vermin proof mesh to all untrapped waste pipes.

3.4 PENETRATIONS

At penetrations through constructions provide and fit collars and escutcheon plates to match pipework.

3.5 TEST

Confirm timing before carrying out any tests. Supply potable water and apparatus needed. Test to NZBC G13/AS1 or AS/NZS 3500.2, 15 as required. Carry out and record a visual inspection that each joint showed no evidence of leaks.

3.6 CLEAN UP

Remove labels and clean fittings. Remove unused materials from the site.

4 SELECTIONS

4.1 PVC-U WASTE, DISCHARGE AND VENT PIPES

Refer to Client and Manufacturer Specifications.

4.2 EXPOSED PIPES AND TRAPS

Refer to Client and Manufacturer Specifications.

7430 DRAINAGE

1 GENERAL

This section relates to the supply and laying of gravity foul water (sewage), stormwater and groundwater drainage.

1.1 DOCUMENTS REFERRED TO

Documents referred to in this section are:

NZBC B1/AS1	Structure
NZBC E1/AS1	Surface water
NZBC E1/AS2	Surface water
NZBC E1/VM1	Surface water
NZBC G1/AS1	Personal hygiene
NZBC G13/AS1	Foul water - sanitary plumbing
NZBC G13/AS2	Foul water - drainage
NZBC G13/AS3	Foul water - sanitary plumbing and drainage
AS/NZS 1254	PVC-U pipes and fittings for Stormwater and Surface Water applications
AS/NZS 1260	PVC-U pipes and fittings for drain, waste and vent applications
AS/NZS 2032	Installation of PVC pipe systems
AS/NZS 2033	Installation of polyethylene pipe systems
AS 2439.1	Perforated Plastics Drainage and Effluent Pipes and Fittings - Perforated drainage pipe and associated fittings
AS/NZS 2566.1	Buried Flexible Pipelines - Structural Design
AS/NZS 2566.2	Buried Flexible Pipelines - Installation
AS/NZS 3500.3	Plumbing and drainage - Stormwater drainage
NZS 3104	Specification for concrete production
NZS 3111	Method of test for water and aggregate for concrete
AS/NZS 3500.2	Plumbing and drainage - sanitary plumbing and drainage
NZS 3604	Timber-framed buildings
NZS 4229	Concrete masonry buildings not requiring specific engineering design
NZS 4402 (set)	Method of testing soils for civil engineering purposes
AS/NZS 4671	Steel reinforcing materials
AS/NZS 5065	Polyethylene and polypropylene pipes and fittings for drainage and sewerage applications
NZCMM	NZ Concrete Masonry Manual section 6.1 Masonry Retaining Walls
NZTA F2	Specification for pipe subsoil drain construction

Plumbers, Gasfitters and Drainlayers Act 2006

1.2 AS BUILT DOCUMENTS

Supply a 1:100 scale as-built drawing of drains and fittings to the territorial authority and to the owner on completion.

1.3 QUALIFICATIONS

Drainlayers to be experienced, competent and familiar with the materials and techniques specified. Carry out all work under the direct supervision of a certifying drainlayer under the Plumbers, Gasfitters and Drainlayers Act 2006.

2 PRODUCTS

2.1 CONCRETE

17.5 MPa prescribed mix to NZS 3104.

2.2 REINFORCEMENT

Plain round and/or deformed steel bars, Grade 300 to AS/NZS 4671.

2.3 PVC-U PIPES

PVC-U pipes bends, junctions, fittings and joints to AS/NZS 1254 and AS/NZS 1260.
Underground PVC-U pipe to be classified as follows:

Classification:	Use:
SN4 - SN6	Domestic & light load areas
SN8 - SN10	Commercial & Industrial medium load areas
SN16	Public roads & high load areas

3 EXECUTION

3.1 EXCAVATE

Excavate for drains to a firm even base with correct gradients set in straight runs.
Trenches running parallel, below and close to foundations of buildings to NZS 3604 or NZS 4229 to be separated to:

- NZBC E1/AS1, 3.9.7, **Proximity of Trench to Building**, for stormwater and subsoil drains.
- AS/NZS 3500.3, 6.2.8, **Installation near and under buildings**, as modified by NZBC E1/AS2.
- NZBC G13/AS2, 5.6, **Proximity of Trench to Building**, for foul water drains.

3.2 MANUFACTURER'S REQUIREMENTS

All drainage installations to the pipe and fitting manufacturer's requirements.

3.3 LAY STORMWATER DRAINS

Confirm the required location of downpipes and finished ground levels before commencing pipework. Set downpipe bends in concrete with the concrete brought up to protect the top of the bend from damage. Lay drains in straight runs to correct gradients to discharge into the network utility operator's stormwater system.

3.4 SOAKHOLES OR TRENCHES

Dispose of stormwater on site as shown on the drawings, by soakage, to suit local geology and soil structure; all as directed by the territorial authority.

4 SELECTIONS

4.1 PVC-U PIPES

Brand/type: Kembla KemPex Crimp

7513 CENTRAL HEATING SYSTEMS

1 GENERAL

This section relates to the supply and installation of:

- diesel boilers
- gas boilers
- electric heat pumps
- aluminium radiators
- steel panel radiators
- water heated towel rails.

Documents

1.1 DOCUMENTS

Refer to the general section 1233 REFERENCED DOCUMENTS. The following documents are specifically referred to in this section:

NZBC G10/AS1	Piped services
NZBC G11/AS1	Gas as an energy source
NZBC G12/AS1	Water supplies
BS EN442-1	Specification for radiators and convectors. Technical specifications and requirements
NZS 5262	Gas appliance safety
AS/NZS 5601.1	Gas Installations - general installations
AS/NZS 60335.2.102	Household and similar electrical appliances - Safety - Particular requirements for gas, oil and solid-fuel burning appliances having electrical connections
CoP Boilers	Approved code of practice for the design, safe operation, maintenance and servicing of boilers

Electricity (Safety) Regulations 2010 (Reprint as at 21 January 2019)
Gas (Safety and Measurement) Regulations 2010
Plumbers, Gasfitters and Drainlayers Act 2006
Documents listed above and cited in the clauses that follow are part of this specification. However, this specification takes precedence in the event of it being at variance with the cited document.

Warranties

1.2 WARRANTY

Warrant this part of the work under normal environmental and use conditions against failure of materials and execution:

Piping system:	10 years issued by the manufacturer
Boiler units and heat pumps:	3 years issued by the manufacturer
Radiators:	5 years issued by the manufacturer
Execution:	1 years issued by the manufacturer's accredited installer

Requirements

1.3 COMPLY

Comply with the Gas (Safety and Measurement) Regulations 2010, Electricity (Safety) Regulations 2010, AS/NZS 60335.2.102 and the network utility operator's requirements. Give notices for inspections and carry out tests as required.

1.4 INFORMATION FOR OPERATION AND MAINTENANCE

Provide the owner with the manufacturer maintenance information.

2 PRODUCTS

Appliances

2.1 HEATED TOWEL RAIL

Heated towel rail straight or curved in profile and available in white powder coat or chrome plated finish. Designed to be heated by an electric element, central heating system or a combination of both.
Refer to SELECTIONS for product selection.

3 EXECUTION

Conditions

3.1 GENERALLY

Carry out the whole of this work to the requirements of NZBC G10/AS1: (Gas); NZBC G11/AS1; NZBC G12/AS1; AS/NZS 5601.1.

Application

3.2 CONNECT UP HEATED TOWEL RAIL

Install heated towel rail where located on the plans. Connect hot water inlet and outlet to the heated towel rail. Fit inlet and outlet with isolating valves.

Commissioning

3.3 POST INSTALLATION TESTING

The completed system to be fully tested and commissioned in accordance with the manufacturer's recommendations and as necessary to ensure the system is complete.

Testing to include:	Pressure test to ensure any components in the system will withstand the test pressure and has been tested for leakage and proved to be sound.

Rectify any sub-standard items and re-test.

3.4 FINAL INSPECTION AND TEST

Submit the work for inspection and test and prove to the satisfaction of the network utility operator that the installation complies with all Acts and Regulations.

Completion

3.5 REPLACE

Replace damaged, cracked or marked elements.

3.6 LEAVE

Leave appliances clean and in full working order and leave work to the standard required by following procedures.

3.7 REMOVE

Remove debris, unused materials and elements from the site.

4 SELECTIONS

Appliances

4.1 CENTRAL HEATING SYSTEM - HEATED TOWEL RAILS

Model:	Refer to Client and Manufacturers Specification.
Location:	As per sheet 602

7612 RESIDENTIAL EXTRACT SYSTEMS

1 GENERAL

This section relates to the supply and installation of extract systems for residential applications. It includes:

- Kitchen extract systems
- Bathroom and laundry extract systems

1.1 RELATED WORK

Refer to the electrical section(s) for general electrical requirements.

Documents

1.2 DOCUMENTS

Refer to the general section 1233 REFERENCED DOCUMENTS. The following documents are specifically referred to in this section:

NZBC E2/AS1	External moisture
NZBC E3/AS1	Internal moisture
NZBC G4/AS1	Ventilation
AS/NZS 3000	Electrical installations (known as the Australian/New Zealand Wiring Rules)
AS/NZS 60335.1	Household and similar electrical appliances - Safety - General requirements

Electricity (Safety) Regulations 2010 (Reprint as at 21 January 2019).

Documents listed above and cited in the clauses that follow are part of this specification. However, this specification takes precedence in the event of it being at variance with the cited document.

1.3 MANUFACTURER/SUPPLIER DOCUMENTS

Refer to Client and Manufacturers Specification.

1.4 WARRANTY - MANUFACTURER/SUPPLIER

Provide a material manufacturer/supplier warranty:

- Provide this warranty on the manufacturer/supplier standard form.
- Commence the warranty from the date of practical completion of the contract works.

Refer to the general section 1237 WARRANTIES for additional requirements.

1.5 WARRANTY - INSTALLER/APPLICATOR

Provide an installer/applicator warranty:

- Provide this warranty on the installer/applicator standard form.
- Commence the warranty from the date of practical completion of the contract works.

Refer to the general section 1237 WARRANTIES for additional requirements.

Requirements

1.6 CO-ORDINATE WORK

Co-ordinate all items with the main contractor, in particular cutting of penetrations and waterproofing. Exterior penetrations to NZBC E2/AS1 as consistent with the project requirements.

1.7 QUALIFICATIONS GENERALLY

Refer to 1270 CONSTRUCTION for requirements relating to qualifications.

1.8 ELECTRICAL QUALIFICATION

Registered electrician to carry out work to Electricity (Safety) Regulations 2010.

1.9 NO SUBSTITUTIONS

Substitutions are not permitted to any of the specified systems, components and associated products listed in this section.

1.10 INFORMATION FOR OPERATION AND MAINTENANCE

Refer to the general section 1234 DOCUMENTATION for provision of the following general operation and maintenance information as electronic PDF format documents:

Provide this information prior to practical completion.

Compliance information

1.11 INFORMATION REQUIRED FOR CODE COMPLIANCE

Provide the following compliance documentation:

- Manufacturer, importers or distributors warranty
- Installer warranty
- Other information required by the BCA in the Building Consent Approval documents.

2 PRODUCTS

Kitchen extract systems

2.1 KITCHEN RANGEHOOD EXTRACT - TO ROOF

Mechanical rangehood extract system comprised of rangehood canopy, extract fan, filter, lighting, controls, metal ducting, proprietary roof flashing and cowl.
Refer to SELECTIONS for options.

Bathroom and laundry extract systems

2.2 CEILING MOUNTED FAN, DUCTED TO EXTERIOR WALL / SOFFIT

Mechanical fan ducted system comprised of ceiling fan, filters, controls, aluminium foil flexi ducting joined to a solid duct sleeve sloped to remove condensation, exterior weatherproof grille and flashing.
Refer to SELECTIONS for options.

2.3 LAUNDRY DRYER VENT, DUCTED TO EXTERIOR WALL

Laundry dryer vent comprised of, filter, metal ducting, exterior weatherproof grille and flashing.
Refer to SELECTIONS for options.

Component

2.4 ELECTRICAL FAN SWITCH

Independent switch connected to socket outlet located near fan / unit.
Refer to SELECTIONS for run on timer requirements.

3 EXECUTION

Installation - mechanical ventilation

3.1 INSTALL KITCHEN RANGEHOOD

Install rangehood to AS/NZS 3000, AS/NZS 60335.1 and manufacturer installation instructions. Connect unit with ducting to exit either through roof or exterior wall / soffit. Plug into electrical socket.

3.2 INSTALL LAUNDRY DRYER VENT, DUCTED TO EXTERIOR WALL

Install exterior ducted fans to manufacturer requirements.

3.3 INSULATION CLEARANCE

Provide 50mm clearance between insulation and motor unit / electrical enclosure. Insulation can abut ducts.

3.4 ELECTRICAL INSTALLATION

Install switch and socket outlets to AS/NZS 3000 and AS/NZS 60335.1. Refer to electrical section(s) for requirements.

Conditions

3.5 DELIVERY, STORAGE & HANDLING OF PRODUCTS

Refer to 1270 CONSTRUCTION for requirements relating to delivery, storage and handling of products.

Completion & commissioning

3.6 COMPLETION MATTERS

Refer to 1270 CONSTRUCTION for completion requirements and if required commissioning requirements.

4 SELECTIONS

Kitchen extract systems

4.1 KITCHEN RANGEHOOD EXTRACT - TO ROOF

Refer to Client and Manufacturers Specification.

Bathroom and laundry extract systems

4.2 CEILING MOUNTED FAN, DUCTED TO EXTERIOR WALL / SOFFIT

Refer to Client and Manufacturers Specification.

4.3 LAUNDRY DRYER VENT, DUCTED TO EXTERIOR WALL

Refer to Client and Manufacturers Specification.

7701 ELECTRICAL BASIC

1 GENERAL

This section relates to the wiring for domestic and small scale commercial installations, including:

- power
- lighting
- electrical automation
- security system
- complete with componentry
- electrically-powered fittings
- fire rated sealers, liners and accessories

1.1 ABBREVIATIONS AND DEFINITIONS

Refer to the general section 1232 INTERPRETATION & DEFINITIONS for abbreviations and definitions used throughout the specification.
The following abbreviations apply specifically to this section:

AFDD	Arc Fault Detection Device
ELV	Extra Low Voltage
GLS	general lighting service
IP	international (ingress) protection classification
NUO	Network Utility Operator
PCB	printed circuit board
PIR	passive infrared
SIA	security integration architecture
TPS	tough plastic sheathed
TCF	Telecommunications Carriers' Forum

Documents

1.2 DOCUMENTS

Refer to the general section 1233 REFERENCED DOCUMENTS. The following documents are specifically referred to in this section:

NZBC E2/AS1	External moisture
NZBC F6/AS1	Visibility in escape routes
NZBC F7/AS1	Warning systems
NZBC G4/AS1	Ventilation
NZBC G9/AS1	Electricity
AS/NZS 1125	Conductors in insulated electric cables and flexible cord
AS/NZS 1768	Lightning protection
AS/NZS 2201.1	Intruder alarm systems - Client's premises - Design, installation, commissioning and maintenance
AS 2293.1:2005	Emergency escape lighting and exit signs for buildings - System design, installation and operation
AS 2293.3:2005	Emergency escape lighting and exit signs for buildings - Emergency escape luminaires and exit signs
AS/NZS 3000	Electrical installations (known as the Australian/New Zealand Wiring Rules)
AS/NZS 3008.1.2	Electrical installations - Selection of cables - Cables for alternating voltages up to and including 0.6/1 kV - Typical New Zealand installation conditions
AS/NZS 3100	Approval and test specification-general requirements for electrical equipment
AS/NZS 3112	Approval and test specification - Plugs and socket-outlets
AS/NZS 3113	Approval and test specification - Ceiling roses
AS/NZS 3190	Approval and test specification - Residual current devices (current-operated earth-leakage devices)
AS/NZS 3439.3	Low-voltage switchgear and controlgear assemblies - Particular requirements for low-voltage switchgear and controlgear assemblies intended to be installed in places where unskilled persons have access for their use - Distribution boards
AS 3786	Smoke alarms
NZS 4514	Interconnected smoke alarms for houses
NZS 4246	Energy Efficiency - Installing bulking thermal insulation in residential buildings
AS/NZS 5000.2	Electric cables - Polymeric insulated - for working voltages up to and including 450/750v
AS/NZS 60335.1	Household and similar electrical appliances - Safety - General requirements
AS/NZS 60695.11.5	Fire hazard testing - Test flames - Needle-flame test method - Apparatus, conformity test arrangement and guidance.
AS/NZS 61439.3	Low-voltage switchgear and controlgear assemblies - Part 3: Distribution boards intended to be operated by ordinary persons (DBO).
IEC 61643	Components for low voltage surge protection devices

Electricity (Safety) Regulations 2010 (Reprint as at 21 January 2019).
TCF Premises Wiring Code of Practice 2011

Documents listed above and cited in the clauses that follow are part of this specification. However, this specification takes precedence in the event of it being at variance with the cited document.

Warranties

1.3 WARRANTY

Warrant the complete electrical installation under normal environmental and use conditions against failure of materials and execution.

1 year:	Warranty period

Refer to the general section for the required form of 1237WA WARRANTY AGREEMENT and details of when completed warranty must be submitted.

Requirements

1.4 COMPLY

Comply with the Electricity (Safety) Regulations 2010, AS/NZS 3000, AS/NZS 3008.1.2 and TCF Premises Wiring Code of Practice for listed and prescribed work and with the utility network operator's requirements. Apply for the service connection. Arrange for the required inspections of listed work. Pay all fees.

1.5 QUALIFICATIONS WORKERS – LICENSED UNDER STATUTE

Workers and supervisors to be appropriately qualified to applicable legislative requirements. Refer to 1270 CONSTRUCTION for additional requirements relating to qualifications.

1.6 ELECTRICAL CERTIFICATE OF COMPLIANCE

Supply a certificate of compliance (CoC) to the owner, and if required the NUO, as required by the Electricity (Safety) Regulations 2010, prior to connection.

- Arrange for the NUO to inspect before the meter installation, listed work inspection, polarity check and supply becoming live.
- Arrange for an inspector to inspect high risk electrical work as required by regulation 70.

1.7 ELECTRICAL SAFETY CERTIFICATE

Provide an Electrical Safety Certificate (ESC), as required by the Electricity (Safety) Regulations 2010, Reg 74A, to the owner and when required the BCA. To be provided no later than 20 working days after connection and prior to Practical Completion.

2 PRODUCTS

2.1 MAINS SUPPLY

Tough plastic sheathed neutral screened cable to AS/NZS 5000.2 and AS/NZS 3008.1.2, with a minimum rating of 60 amps per phase. Include pilot cable where required by network utility company.

2.2 CABLES

Tough plastic sheathed copper conductors to AS/NZS 5000.2, stranded above 1.0mm², and to AS/NZS 3008.1.2. Minimum sizes as below. Increase sizes if the method of installation, thermal insulation, cable length or load will reduce the cable rating below that of the MCB rating, or produce an excessive voltage drop.

Lighting circuits:	Domestic: 1.5mm² on 10 amp MCBs
Lighting circuits:	Commercial: 1.5mm² on 16 amp MCBs
Power circuits:	2.5mm² on 16 amp MCBs for domestic and unenclosed or unfilled cavity construction
	2.5mm² on 16 amp MCBs for domestic insulated construction, or filled cavity
	2.5mm² on 20 amp MCBs for unenclosed or unfilled cavity construction
	2.5mm² on 16 amp MCBs for insulated construction, or filled cavity, or lengths over 30 metres
Hot water cylinder circuits:	Single phase: 2.5mm² on 20 amp MCBs
Range/oven/hob circuits:	Single phase: 6mm² high temperature cable on 32 amp MCBs

Heat resistant cable for final connections to all heated appliances, and high temperature cable in ambient conditions that may be above 35°C (roof spaces above insulation etc).

2.3 METER BOX

Proprietary manufactured, zinc plated powder coated metal case, or ABS plastic, with glazed panel door, weatherproof where mounted outdoors, and complete with meter mounting, main switch and fuse.

2.4 DISTRIBUTION BOARD

Flush surface mount boards manufactured to AS/NZS 3439.3 , or AS/NZS 61439.3, and installed in accordance with AS/NZS 3000. Manufactured from engineering grade resin with a glow wire rating of 850°C, complete with neutral and earth busbars, and insulated comb phase bar. Distribution boards to have 20% spare capacity for future additions and alterations.

2.5 CIRCUIT PROTECTION

General requirements including main switch 63A or 100A. Residual current protection 30mA, ensure RCCBs' meet Type A and comply with AS/NZS 3190. MCBs to 4.5kA or 6kA rated.

2.6 WALL BOXES

Standard grid size or equivalent to be manufactured from plastic or metal, with 2 or more gang size to be metal with steel inserts for accessory securing screws. Screw fixed.

2.7 SWITCH UNITS

Single pole switches to be 16 amp minimum rated, double pole or intermediate to be 16 amp minimum rated. All switches to be 230 volt a.c. polycarbonate flushplate units.
Label all switch units that control electrical equipment or special lighting circuits by proprietary engraved switch mechanisms where applicable.
Refer to drawings/schedules for number of switches per unit, dimmer units, neon (indicator or toggle) units and 2 way units.
Refer to SELECTIONS.

2.8 SWITCHED SOCKET UNITS

10 amp, 230 volt flat 3 pin socket outlets fitted with safety shutters and manufactured to AS/NZS 3100, AS/NZS 3112 and AS/NZS 3113, single or multi gang as detailed.

2.9 SURGE PROTECTION

Protection for the homes appliances with IEC 61643 Class ll surge protection devices fitted to the switchboard. For variable electronic equipment fit IEC 61643 Class lll surge protection to switched socket outlets.

2.10 CEILING ROSES

White plastic mounting base with screwed cover, manufactured to AS/NZS 3113. Terminal type. Suspended fittings to have sheathed round flexible cord to AS/NZS 3008.1.2. Refer to SELECTIONS.

2.11 BATTEN HOLDERS

Standard white plastic bayonet cap, with cap angled where wall mounted. Brass liners.

2.12 DOOR BELL SYSTEM

Complete with transformer for mounting on distribution board.

2.13 LIGHT FITTINGS

Fluorescent and High Intensity Discharge fittings with low loss control gear and power factor corrected to 0.95 minimum. Control gear suitable for dimming if this is required. All fittings complete with lamps; Incandescent GLS lamps pearl, coiled-coil 230v rated, bayonet cap; Fluorescent triphosphor 2700K; CFL; halogen ELV 12v dichroic reflector with cover glass unless detailed otherwise; integral/non-integral LEDs, reflectors, lenses, heatsinks and drivers - 3,000K to 4,000K, CRI >80, L70.

2.14 SPACE HEATERS

Fixed wired room heaters radiant or convector, and compliant with AS/NZS 60335.1. Flush or surface mount, fitted with safety cut-outs.

2.15 EXHAUST FANS

Ceiling, wall or duct mounted exhaust fans for ventilation to NZBC G4/AS1, and compliant with AS/NZS 60335.1.

2.16 HEATED TOWEL RAILS

Fixed wired heated towel warmers, double insulated, IPX4 splash-proof, compliant with AS/NZS 60335.1, scratch resistant powdercoated or chrome finish.

3 EXECUTION

3.1 MAIN SUPPLY

Lay underground mains to the NUO requirements. Excavate trench, install cable and marker tape and backfill.

3.2 METER BOX

Fit to meter box manufacturer and Electricity Retailer requirements. Recess into external wall in sheltered area and flash to weatherproof to NZBC E2/AS1 fig 69. Arrange for meter installation and connection.

3.3 DISTRIBUTION BOARD

Fit to AS/NZS 3000 and board manufacturer requirements. Recess into wall or surface mount and ensure fire containment properties of the enclosure are maintained.

3.4 CIRCUIT PROTECTION

Install MCBs at distribution board to AS/NZS 3000 to protect each final sub circuit.

3.5 MAIN EARTH

Provide a plastic toby box to contain and protect the earth electrode. Fix the connecting earth wiring closely and securely against wall surfaces.

3.6 EARTH LEAKAGE PROTECTION

Install RCD protection to AS/NZS 3000.

3.7 RCD - RESIDENTIAL INSTALLATIONS

Install 30mA RCD protection at the switchboard for all final sub circuits to control outlets and lighting except for fixed or stationary cooking equipment, to AS/NZS 3000.

3.8 RCD - SPECIFIC INSTALLATIONS

Install fixed wired RCD protected outlets (SRCD) in the following higher risk areas:

- Wet areas: bathrooms, laundries, kitchens.
- Near pools and water features.
- Where intended for use with cleaning equipment.
- Hand-held tools subject to movement in use, i.e. work-shops, garages.

3.9 SET-OUT

The position of outlets and equipment shown on drawings is indicative of requirements. Confirm documents and site conditions are not in conflict with other services or features. Resolve conflicts and discrepancies before proceeding with work affected. Confirm on site the exact location, disposition and mounting heights of all outlets, fittings, equipment, penetrations, and use of exposed wiring. Fix outlet items level, plumb and in line.

3.10 CABLING

Install wiring systems to AS/NZS 3000. All cabling run concealed. No TPS cable laid directly in concrete. Locate holes in timber framing for the passage of cables at the centre line of the timber member. Install cable in conduits where required to pass through concrete or underground. In walls run cabling horizontally and vertically in straight lines. In ceilings either run cabling along ceiling framing or attached to catenary wires. Clip cabling to ceiling framing/catenary wires.

3.11 CABLING CIRCUITS

Install all circuits with the appropriately rated cable and circuit protection. Install with a maximum of 8 light switch units or 4 double or single switched socket units on any circuit. Minimum 2 lighting circuits per floor. Separate circuits for all electric heating appliances. Kitchen sockets to be on at least two different circuits.

3.12 WALL BOXES

Mount flush in cavity construction size to fit products selected. Fix vertically mounted wall boxes to studs. Screw fix horizontally mounted switched socket outlet wall boxes to solid blocking or nogs. Fix switch panel wall boxes to solid blocking.

3.13 LIGHT FITTINGS

Install light fittings in locations and at heights specified and confirmed by the owner, in accordance with the fitting manufacturer requirements.

3.14 EXTRA LOW VOLTAGE LIGHTING

Use electronic, transformers (halogen) or drivers (LED) for ELV lamps, one transformer/driver per lamp. Locate to manufacturer requirements and as close as practicable to the lamp. Ensure transformers/drivers and rear of light fittings are adequately ventilated and appropriately clear of any building elements, to AS/NZS 3000.

3.15 SMOKE ALARMS

Install Type 1 domestic smoke alarm system to NZBC F7/AS1 3.0 **Domestic smoke alarms**, NZS 4514 and to the alarm manufacturer requirements. Fit neatly and without damage to the surrounding finish.

3.16 SURGE PROTECTION

Install surge protection devices to manufacturer requirements and in accordance with AS/NZS 3000 and AS/NZS 1768. When fitting IEC 61643 Class ll protection at the switchboard, protect the device by a dedicated MCB.

3.17 ELECTRIC POWERED FITTINGS AND EQUIPMENT

Install and wire fittings and equipment to individual fittings and equipment manufacturer requirements. Refer to the drawings for required layouts and locations for equipment. Refer to SELECTIONS for schedules of fittings.

3.18 BATHROOM ELECTRICAL FIXTURES

Install all electrical fixtures. Connect the following bathroom and toilet electrical items:

- Heated towel rails: Install to manufacturers requirements and installed in accordance with AS/NZS 3000
- Mirror demisters: Locate centrally above the wash hand basin(s). Connect wiring to room lighting unless specified otherwise.
- Exhaust fans: Install exhaust fans to manufacturer requirements. Installed in accordance with AS/NZS 3000 and NZBC G4/AS1.

3.19 OUTDOOR/EXTERIOR SERVICES

Install all wiring systems in accordance with AS/NZS 3000 and in accordance with the manufacturer recommendations:
Provide circuits and connections for exterior installations, including ELV 12/24 Volt path lighting and electronic irrigation systems. Refer to drawings for connection points. Where underground, ensure appropriate protection, such as thickness of sheathing, conduit, depth of cabling, and proximity to other services.

Use the appropriate rated fittings for power control and power supply. Weather protected switches and sockets to IP56. Install to manufacturer specifications using recommended fittings and sealants to maintain the products integrity.

Earth leakage protection to be provided for in areas where there is increased risk to human safety in the form of either RCDs at the distribution board, or socket outlet. RCDs are recommended for visible awareness of protection.

3.20 LABELLING

Include label under each controller, switch and circuit breaker on distribution boards. Include a warning notice if light dimmers are used in the installation. List the rating of each circuit.

Completion & Commissioning

3.21 COMPLETION MATTERS

Refer to 1270 CONSTRUCTION for completion requirements and if required commissioning requirements.

4 SELECTIONS

Materials

4.1 SELECTIONS - FITTINGS AND HARDWARE

Confirm selections of all outlet fittings and hardware with the owner in writing before ordering.

4.2 METER BOX

Refer to Client and Manufacturers Specification.

4.3 DISTRIBUTION BOARD

Refer to Client and Manufacturers Specification.

Outlets - fittings

4.4 INTERIOR OUTLETS

Refer to Client and Manufacturers Specification.

4.5 INTERNAL LIGHT FITTINGS

Refer to Client and Manufacturers Specification.

4.6 EXTERNAL LIGHT FITTINGS

Refer to Client and Manufacturers Specification.

4.7 MISCELLANEOUS ELECTRICAL ITEMS

Refer to Client and Manufacturers Specification.

4.8 SPACE HEATERS

Location:	Living
Brand / type:	Real Flame Ignite 50" / RF XLF50

4.9 HEATED TOWEL RAILS

Refer to Client and Manufacturers Specification.

4.10 BATHROOM FANS AND HEATERS

Refer to Client and Manufacturers Specification.

4.11 ELECTRICAL APPLIANCES

Refer to Client and Manufacturers Specification.

CADetailer Ltd

SUPPORTING MANUFACTURER DOCUMENTATION
For information only. Specification and contract documentation takes precedence.
This version includes documents related to:
Performance | Installation | Maintenance | Warranty | Environmental

Kendall

Project Specification

Lot 81 The Sanctuary, Mangawhai, New Zealand
Project Ref:

Printed: 22 June 2021

COASTAL HOMES

masterspec

Specification built using Masterspec software
Project ID: 226717 - 218627

Manufacturer Documents Index

3155FR	Firth Ribraft Floor Systems	2
4161P	Paul Industries Underlays, Foil & DPC	42
4161T	Thermakraft Underlays, Foils, DPC, DPM, & Tapes	55
4171E	Ecoply Barrier Rigid Air Barrier System	61
4282C	Specialized EZpanel AAC Panel Cladding System	70
4323G	Gerard Steel Tile Roofing	100
4710EW	Earthwool Glasswool Insulation	133
5113G	GIB Plasterboard Linings	161
6221M	Mapei Tiling Solutions	348
7112	Water Storage Tanks	358
7701	Electrical Basic	383

3155FR Firth Ribraft Floor Systems

Firth Industries
+64 09 5259190
info@firth.co.nz
www.firth.co.nz

SUPPORTING DOCUMENTS

FIR0667-Ribraft-Technical-Manual-2020

Ref 12132. Uploaded 13 Sep 2020

Purpose: Performance, Installation

Firth Ribraft Codemark Certificate March 21

Ref 26144. Uploaded 27 May 2021

Purpose: Warranty

Firth

JANUARY 2020

+RibRaft®

TECHNICAL MANUAL







CodeMark
CM20056



This document contains design and installation information. A variation to any of the information given requires specific engineering design and is hence beyond the scope of this document.

The Firth RibRaft® Floor System can be constructed for all slab-on-ground concrete floors for domestic or residential buildings that fall within the scope of NZS 3604:2011 “Timber Framed Buildings” and Clause 3 “Scope” of Section 1 of this Manual. The design and installation details in this Manual shall be used to design and construct such a floor.

The Firth RibRaft® Floor System is covered by the MBIE Codemark®. This is conditional on the system being used as described in CertMark Australasia certification decision, which in turn requires design in accordance with Section 1 and installation in accordance with Section 2 of this Manual and on site verification in accordance with Section 3.

Note that a MBIE Codemark® means that if this Manual is rigidly followed the relevant Building Control Authority will automatically provide a building permit without the need for producer statements. To comply with the Manual does mean that Firth Certified Concrete® must be used.

THIS MANUAL CONSISTS OF 3 SECTIONS:

SECTION 1 DESIGN INFORMATION

Contains information principally useful for the specifier or building designer

1.0	**INTRO**	**4**
2.0	**TECHNICAL INFORMATION**	**4**
2.1	Overview	4
2.2	Pods	4
2.3	Steel	4
2.4	Concrete	4
3.0	**SCOPE**	**5**
3.1	Structure Limitations	5
3.2	Live Loading	5
3.3	Snow Loading	5
3.4	Dead Loading for Use with This Manual	5
3.5	Foundation Requirement for Different Building Types	6
3.6	Foundation Soils	6
3.7	Flow Diagrams	6
4.0	**CONSTRUCTION DETAILS**	**9**
4.1	Pod Layout	9
4.2	Edge Beam Width and Reinforcement	9
4.3	Internal Ribs (non load bearing) Width and Reinforcement	9
4.4	Internal Ribs (load bearing) Width and Reinforcement	9
4.5	Point loads	9
4.6	Mesh Reinforcement	11
4.7	Re-entrant Corners	11
5.0	**LATERAL RESISTANCE**	**12**
5.1	Earthquake Resistance	12
5.2	Wind Resistance	13
5.3	Shear Keys	13
5.4	Design Example for Lateral Resistance Calculation	14
6.0	**OTHER DESIGN DETAILS**	**14**
6.1	R-Values	14
6.2	Shrinkage Control	17
6.2.1	Saw Cut Joints	17
6.2.2	Free Joints	17
6.3	Services Detailing	18
6.3.1	Within Slab Running of Services	18
6.3.2	Under Slab Running of Services	18
6.3.3	Recesses for Showers	20
6.3.4	Step Down of up to 600mm in the RibRaft® Floor	21

SECTION 2 INSTALLATION INFORMATION

Primarily aimed at the person on site installing the Firth RibRaft® Floor system

1.0	**INTRO**	**22**
2.0	**SITE REQUIREMENTS**	**22**
2.1	General	22
2.2	Temporary Excavations	22
2.3	Surface Water	22
3.0	**INSTALLATION PROCEDURE**	**24**
3.1	Site Preparation	24
3.2	Earthworks	24
3.3	Shear Keys	24
3.4	Plumbing and Services	24
3.5	Sand Blinding	24
3.6	Damp Proof Membrane	25
3.7	Edge Formwork	25
3.8	Laying the Pods and Spacers	26
3.9	Reinforcing Steel	26
3.9.1	Edge Beam Steel	26
3.9.2	Rib Steel	27
3.9.3	Mesh Reinforcing	27
3.9.4	Re-entrant Corner Steel	27
3.10	Concrete Installation	27
3.10.1	Placing	28
3.10.2	Finishing	28
3.10.3	Curing	29
3.11	Shrinkage Control Joints	29
3.11.1	Saw Cut Joints	29
3.11.2	Free joints	29
3.12	Removal of Formwork	30
3.13	Masonry Veneer	30
3.14	Landscaping/Paving	30
3.15		
4.0	**SHEAR KEYS**	**31**

SECTION 3 VERIFICATION

Describes the required verification checks

1.0	**DESIGN**	**32**
2.0	**CONSTRUCTION**	**32**

SECTION: DESIGN INFORMATION

1

1.0 THIS SECTION OF THIS MANUAL CONTAINS DESIGN INFORMATION NOT REQUIRING SPECIFIC ENGINEERING INPUT FOR THE FIRTH RIBRAFT® FLOOR SYSTEM (THE SYSTEM). FULL INFORMATION ON THE INSTALLATION PROCEDURES IS DESCRIBED IN SECTION 2 OF THIS MANUAL (INSTALLATION INFORMATION). WHERE STANDARDS ARE REFERENCED IN THIS MANUAL, THESE SHALL INCLUDE THE LATEST AMENDMENTS.

2.0 TECHNICAL INFORMATION

2.1 Overview

The Firth RibRaft® Floor System is a reinforced concrete waffle raft floor slab-on-ground. Typically it consists of an 85mm thick slab supported by a grid of ribs normally 100mm wide at 1200mm x 1200mm centres. The overall depth is 305mm. Edge beams and ribs under load bearing walls are 300mm wide to provide for the extra load carried by these members. Where heating coils of less than 25mm diameter are embedded in the topping, the slab concrete thickness shall be 110mm meaning the overall thickness is 330mm. Where the top floor surface is honed to provide a decorative finish, a slab thickness of 100mm (before honing) should be specified.

2.2 Pods

Firth RibRaft® polystyrene pods 1100mm square and 220mm thick are placed directly on levelled ground and are arranged in such a way as to form a reinforced concrete floor slab with a grid of reinforced concrete ribs and edge beams when concrete is placed onto them. Pods may be cut to suit specific architecture layout and also to accommodate services. 300mm thick pods are available if needed for deeper edge beams and internal ribs.

2.3 Steel

Reinforcing steel in the slab shall consist of Welded Reinforcing Mesh complying with AS/NZS 4671:2001 with a minimum weight of 2.27kg/m^2, a lower characteristic stress of 500MPa, square configuration of orthogonal bars between 150 to 200mm centres, and ductility class L or E, hereafter referred to “mesh”. The presence of Class E reinforcing bars in the ribs and beams provides adequate ductility of the system which allows the use of class L mesh. Typically the topping mesh reinforcement will be 665 mesh (class L) or SE62 ductile mesh, each being equally applicable. The reinforcing bars in the ribs and edge beams shall conform to AS/NZS 4671:2001 “Steel Reinforcing Materials”. Specifically designed spacers are used to position the polystyrene pods and the rib and edge beam reinforcing steel bars in a secure manner until the concrete is placed. The reinforcing mesh is held in place by mesh chairs. Conventional timber or steel formwork is used to form the edge of the slab.

2.4 Concrete

One of the following Firth concrete products shall be used in the system:

1) Raftmix: a 20MPa 100mm slump mix available as a pump mix suitable for 100mm pump lines available in either a 13mm or more usually a 19mm nominal aggregate size, or as a structural (non-pump) mix.

2) Raftmix25: a 25MPa 100mm slump mix available as a pump mix suitable for 100mm pump lines available in either a 13mm or more usually a 19mm nominal aggregate size, or as a structural (non-pump) mix. This mix shall be specified for buildings constructed in the ‘sea spray zone’ (i.e. within 500m of the sea including harbours, within 100m of tidal estuaries or inlets, on offshore islands and elsewhere defined as exposure zone D in 4.2.3.3 of NZS3604).

Note: Additional admixtures to standard RibRaft® mixes to be approved by the Firth Plant Engineer.

CODEMARK™
CM70056

3.0 SCOPE

This Clause sets out the limitations that apply to the use of the system to ensure that specific engineering input is not required. The concrete floor slab for buildings or ground conditions that do not meet this scope must be subjected to specific engineering design to comply with the requirements of the New Zealand Building Code.

3.1 Structure Limitations

Specific engineering input shall not be required only where the structure supported by the system complies with the following criteria:

- The structure supported by the system is constructed in a location where the Seismic Hazard Factor Z (defined in NZ1170.5) is less than or equal to 0.45 (refer to Figure 6).
- The system is laid level, or has a maximum step of 600mm detailed in accordance with this Manual.
- The structure supported by the system has no basement, part basement or foundation walls.
- The total height from the lowest ground level to the highest point of the roof shall not exceed 10m.
- The structure supported by the system has a roof pitch limited to 60 degrees maximum from the horizontal.
- The maximum height of a single or top storey is 4.8m and any other storey is 3m.
- Only ground floor walls of the structure supported by the system are permitted to be “heavy external walls” (as defined in Clause 3.3).
- The roof truss span shall be less than or equal to 12m when the roof and ceiling loads are supported entirely by the external walls. Where internal support of roof trusses is used the footings below point loads identified by the truss designer shall comply with this Manual.
- Where internal load bearing walls are used to support the roof and floor, the loaded dimensions stated in tables 8.2 and 14.10 of NZ3604:2011 shall apply, and these load bearing walls shall be supported on a 300mm wide load bearing rib as detailed in this manual.
- Floors may be of unlimited size provided that the maximum dimension between free joints shall not exceed 30m. Where free joints are required they should be detailed in accordance with this Manual.

3.2 Live Loading

The live loading cases of structures covered by these designs are:

- 1.5kPa and 3.0kPa as per NZS3604 “Timber Framed Buildings”.
- 13kN concentrated load in garage over area of 0.3 x 0.3m (vehicle limited to 2500kg gross).

3.3 Snow Loading

Open ground snow loading as defined in NZS3604 of up to 2kPa.

3.4 Dead Loading for Use with This Manual

The dead load cases of structures covered by these designs are:

- Light external walls with total mass not exceeding 60kg/m^2 – e.g. timber framing with weather boards and interior wall linings.
- Heavy external walls with total mass greater than 60kg/m^2 but not exceeding 290kg/m^2 – e.g. timber framing with masonry veneer or partially filled 20 series masonry blocks.
- Internal walls with total mass not exceeding 45kg/m^2 – e.g. timber framing and linings.
- Light roofs with total mass not exceeding 45kg/m^2 – e.g. ceiling linings and metal roof, including framing.
- Heavy roofs with total mass greater than 45kg/m^2 but not exceeding 85kg/m^2 – e.g. ceiling lining and concrete tiles or slates, including framing.
- Mid-floors with total mass not exceeding 60kg/m^2 – e.g. timber framing and flooring, including ceiling linings.
- Heavy internal walls and/or load bearing internal walls supported on a load bearing rib.

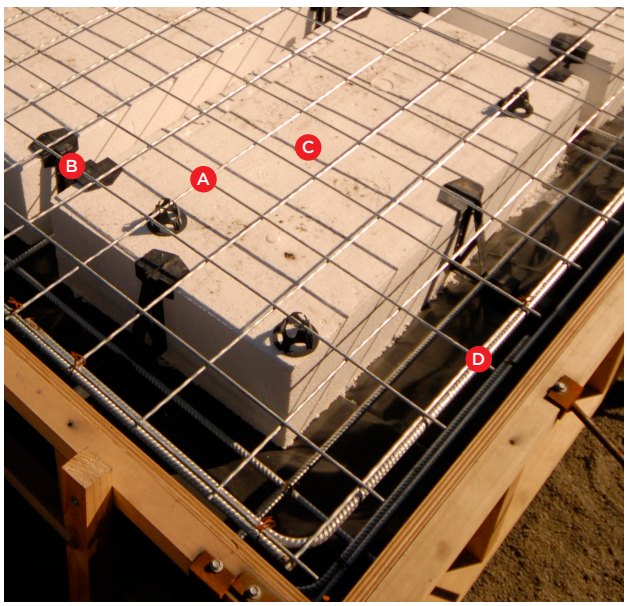

The RibRaft® System

A Steel mesh reinforcing **B Firth 100mm spacer**

C Firth RibRaft® polystyrene pods **D Steel reinforcing**

3.5 Foundation Requirement for Different Building Types

The designs given in this Manual are limited to where the system supports Building Types as described in Table 1. The classification of wall and roof weights are as detailed in Clause 3.4 of this Section. Single and two storey shall be as defined in NZS 3604:2011.

Table 1 Foundation Type Identifier

NUMBER OF STORIES	ROOF	GROUND FLOOR EXTERNAL WALLS	SECOND STOREY EXTERNAL WALLS	1.5KPA LIVE LOAD & UP TO 1KPA SNOW LOAD	3KPA LIVE LOAD & /OR 2KPA SNOW LOAD
SINGLE STOREY	Light	Light		A	A
	Heavy	Light		A	B
	Light	Heavy		B	B
	Heavy	Heavy		C	C
DOUBLE STOREY	Light	Light	Light	C	D
	Heavy	Light	Light	D	E
	Light	Heavy	Light	D	E
	Heavy	Heavy	Light	E	G

3.6 Foundation Soils

The system may be used when the supporting ground meets the definitions of "good ground" given in Section 3 of NZS 3604:2011 (as modified by B1 of the Building Compliance Documents). In addition, the system shall not be used for damp sites i.e. where it can be reasonably expected that the ground water level could come within 600mm of the underside of the system. The acceptability of the ground shall be verified in accordance with Clause 3.1.3 of NZS 3604:2011.

Solutions for soils prone to liquefaction or expansive soils are available using the Firth RibRaft® technology, however these are outside the scope of this Manual and require specific engineering design.

Where the ultimate bearing capacity required of the supporting ground is verified by Scala Penetrometer testing in accordance with Clause 3.3 of NZS3604:2011 or for cohesive soils using a calibrated shear vane in accordance with the NZGS Guideline for Hand Held Shear Vane Test, the bearing capacity shall exceed the values in Table 2 for the proposed building type. For scala penetrometer testing, the bearing capacity shall be considered adequate when the number of blows per 300mm depth of penetration below the underside of the system at each test site exceeds the values given in Table 2 below.

For RibRaft® foundations compliance with Table 2 allows ultimate bearing capacities of less than 300kPa. However, with the exception of bearing capacity all other requirements in NZS3604:2011 for "good ground" shall be complied with.

Table 2 Scala Penetrometer Blows Required and Ultimate Bearing Capacity

FOUNDATION TYPE	ULTIMATE BEARING CAPACITY (KPA)	MIN. BLOWS PER 300MM DEPTH FOR SCALA TESTING
A	140	4
B	175	5
C	210	6
D	240	7
E	275	8
G	Good ground	9

3.7 Flow Diagrams

The flow diagrams on the following pages (adapted from NZS3604:2011) will help in determining whether the non-specific details for the system can be used for the purposes of the concrete floor slab construction. There are two checks in the process. The first is to determine whether the proposed building complies with the requirements set out in this Manual (Building Check), and the second is to determine whether the site complies with the requirements set out in this Manual (Site Check).

(Note: NZS3604:2011 provides for parts of buildings to be considered as individual buildings. These flow diagrams apply to those parts of the building where slab-on-ground is being considered and where the part of the building can be considered as an individual building under NZS3604:2011).

Figure 1 Building Check Flow Diagram

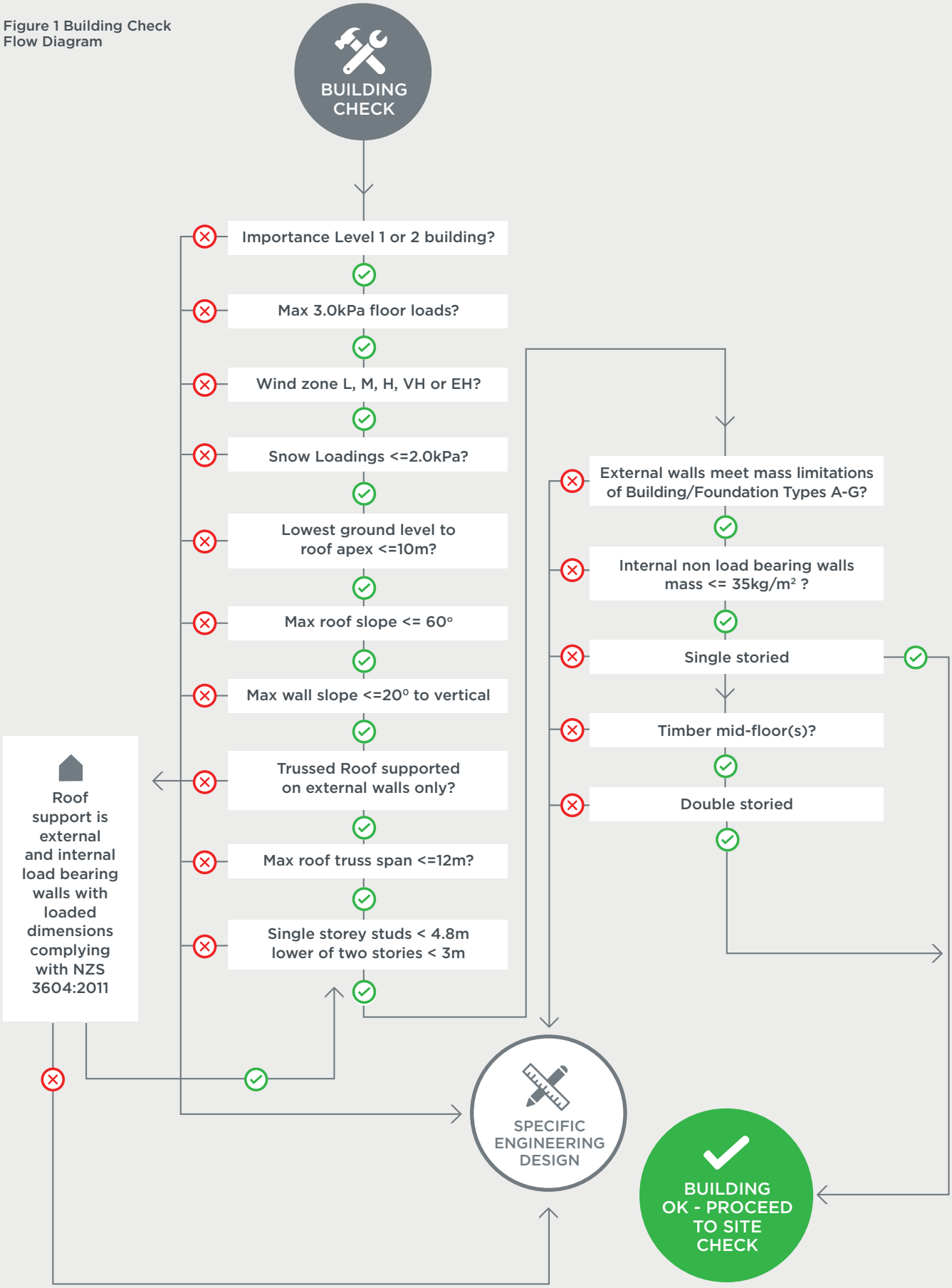

Figure 2 Building Check
Flow Diagram

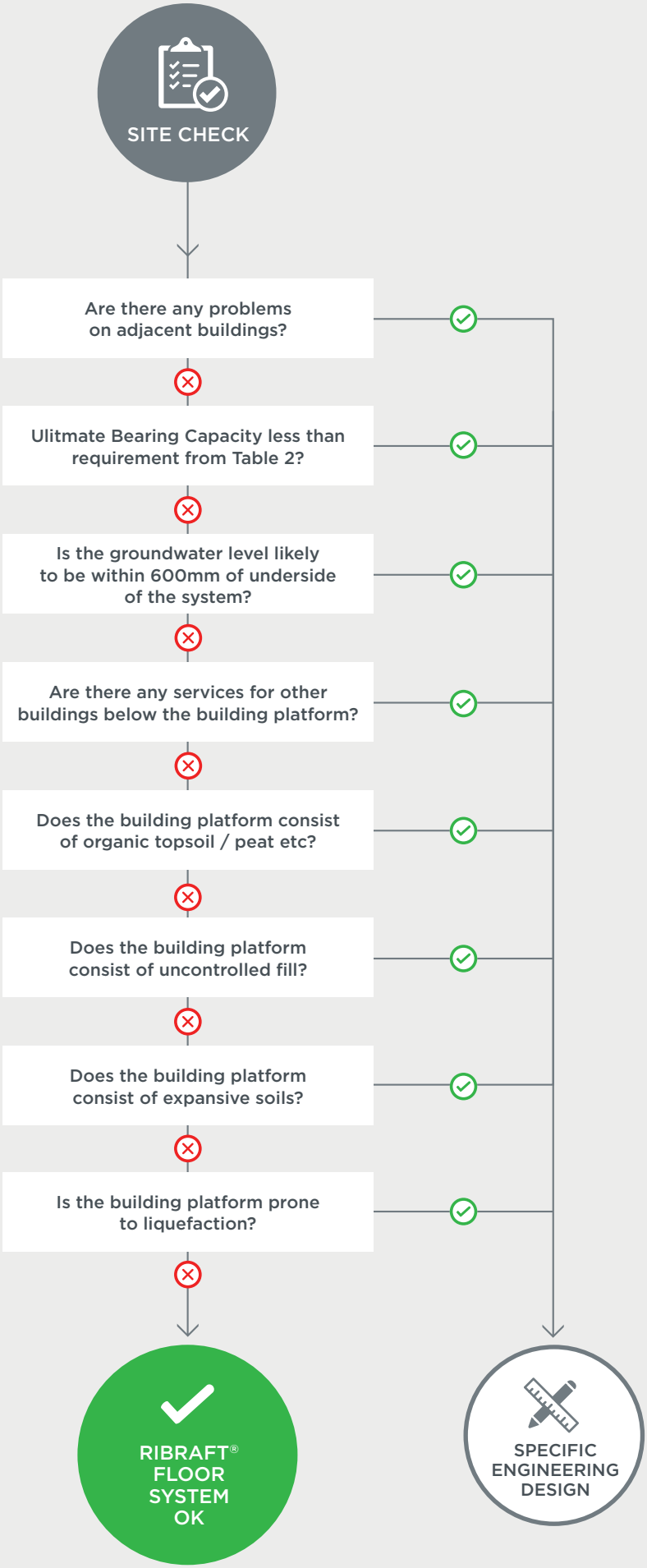

4.0 CONSTRUCTION DETAILS

Standard construction details for the system are provided here for buildings that fall within the below scope.

4.1 Pod Layout

RibRaft® polystyrene pods supplied by Firth (1100 x 1100 x 220mm thick) shall be placed on levelled ground and arranged in a waffle pattern. The pods are used as void formers while the concrete is curing. These pods are an integral component of the system and shall not be substituted.

Pods shall be placed so as to provide the necessary spacing between the edge beams and ribs as described below. The first rib out from the edge beam shall have a maximum clear separation of 1100mm however in all other cases the centre to centre distance between the ribs, whether they are 100mm or 300mm wide, shall be 1200mm. In the case of 100mm ribs this centre to centre spacing is achieved by the 1100mm square pods however between 100mm and 300mm ribs, or between two 300mm ribs, the pods shall be cut down to suit. Pods may be cut down to size but shall not be added to, where this is necessary to suit the building layout, penetrations or orientation of beams and ribs.

Figure 3 shows a typical layout of the pods and ribs. Note the part pods around the edge, where the building shape dictates, and adjacent to the 300mm rib.

Firth suggests that when drawing the building plan, a generic RibRaft® grid (100mm wide ribs at 1200mm centres) is set out using the corner of the building as a starting point. The location of any load bearing ribs, or point loads greater than 10kN, are identified and pods cut to establish 300mm wide ribs or foundation pads as described in this Manual. The most cost effective solution being a simple grid layout which requires minimum cutting of the pods. Ribs can be used at less than 1200mm centres, however it is more cost effective to use the 1200mm centres wherever practicable.

Figure 3 Typical RibRaft® Plan

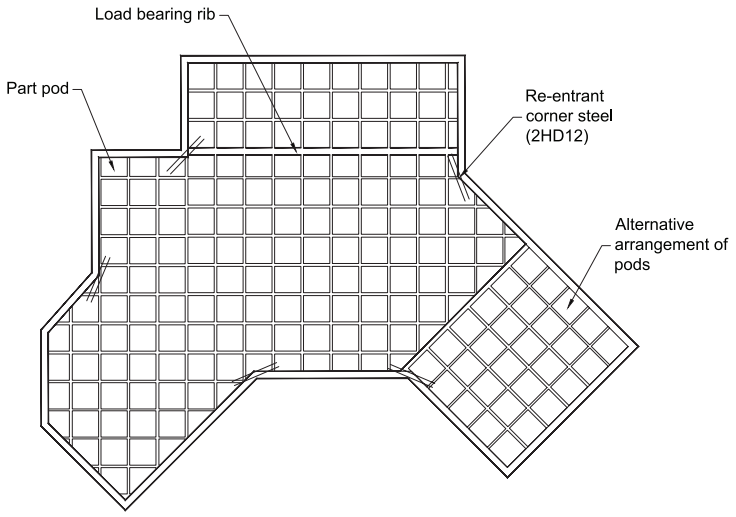

4.2 Edge Beam Width and Reinforcement

Edge beams around the perimeter of the floor slab shall be 300mm to provide bearing capacity for external load bearing walls, and contain 2-HD12 bars (Grade 500E) as bottom steel and 1-HD12 bar (Grade 500E) in the top. This top bar shall be tied to the underside of the reinforcement mesh. Refer Figure 5, below for construction details. The edge beam shall be rebated for brick veneers where necessary as shown in Figure 5(C).

4.3 Internal Ribs (non load bearing) Width and Reinforcement

Each standard internal rib shall be 100mm wide and shall contain 1-HD12 steel bar (Grade 500E) held in place at the bottom of the rib by a Firth spacer. Refer Figure 5E for construction details.

4.4 Internal Ribs (load bearing) Width and Reinforcement

For load bearing walls that support the roof and floors and heavy internal walls, the pods shall be cut to create a 300mm wide rib directly under the load bearing wall, Refer Figure 5(D) for construction details under load bearing walls. Where the load bearing ribs meet and terminate at an edge beam or internal rib the bottom reinforcement from the load bearing rib shall be bent into the adjacent rib and tied together. The reinforcement shall lap for at least 720mm.

4.5 Point Loads

Truss manufacturers often support the roof trusses internally on posts or studs within a wall, which are described on the truss manufacturer's drawings as falling into various ultimate limit state categories. Table 3 summaries when individual footings are required below the reactions, and the form these should take.

Table 3 Foundation Requirements for Individual Point Loads

	FOUNDATION OPTIONS BELOW POINT LOAD:	
ULTIMATE LIMIT POINT LOAD REACTION	PAD OPTION, GOOD GROUND	BEAM OPTION, BEARING CAPACITY GREATER THAN 140KPA [3]
Up to 10kN	No thickening required	No thickening required
Up to 20 kN	375x375 pad[1]	300mm wide load under point load as detailed in Figure 5
Up to 30kN	450x450 pad[2]	300mm wide load under point load as detailed in Figure 5

Notes
(1) Pad thickness to match depth of pods plus topping (bears on ground not polystyrene) and reinforced with 2 x D12 Bars both ways
(2) Pad thickness to match depth of pods plus topping (bears on ground not polystyrene) and reinforced with 3 x D12 Bars both ways
(3) Refer section 3.6 for confirmation of bearing capacity. With exception of bearing capacity all other requirements in NZS3604 for good ground shall be complied with.

Figure 4 Details for Beam Option Thickening Under Point Loads

ULTIMATE LIMIT LOAD P FROM TRUSS DESIGNER	MINIMUM EDGE DISTANCE X IN MM
20kN	200 *
30 kN	400 *

* If minimum edge distances cannot be achieved extend thickening to next 100mm ribs

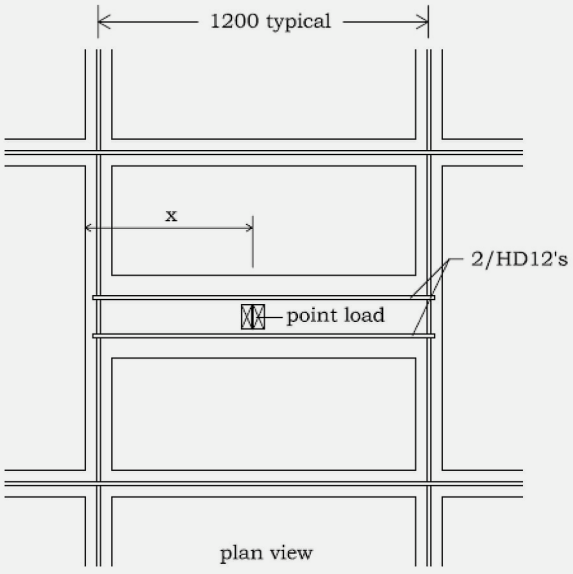

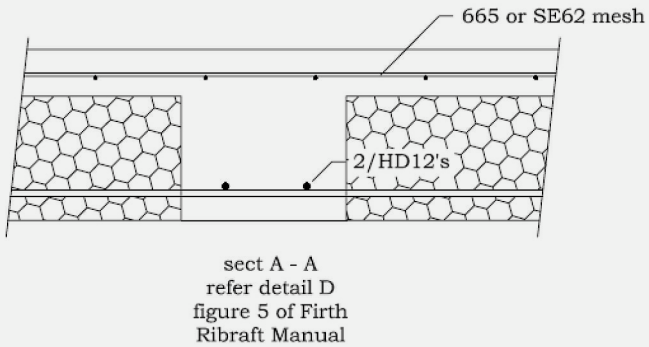

4.6 Mesh Reinforcement

The entire floor slab shall be reinforced with 665 or SE62 mesh supported on 40mm mesh chairs sitting on the polystyrene pods.

4.7 Re-entrant Corners

In order to limit the width of cracking at the re-entrant, or internal corners, extra steel shall be placed on top of the mesh. These shall be 2-HD12 bars (Grade 500E), 1200mm long tied to the top of the mesh at 200mm centres, with 50mm cover from the internal corner – refer Figure 3.

Figure 5
Standard RibRaft® Construction Details

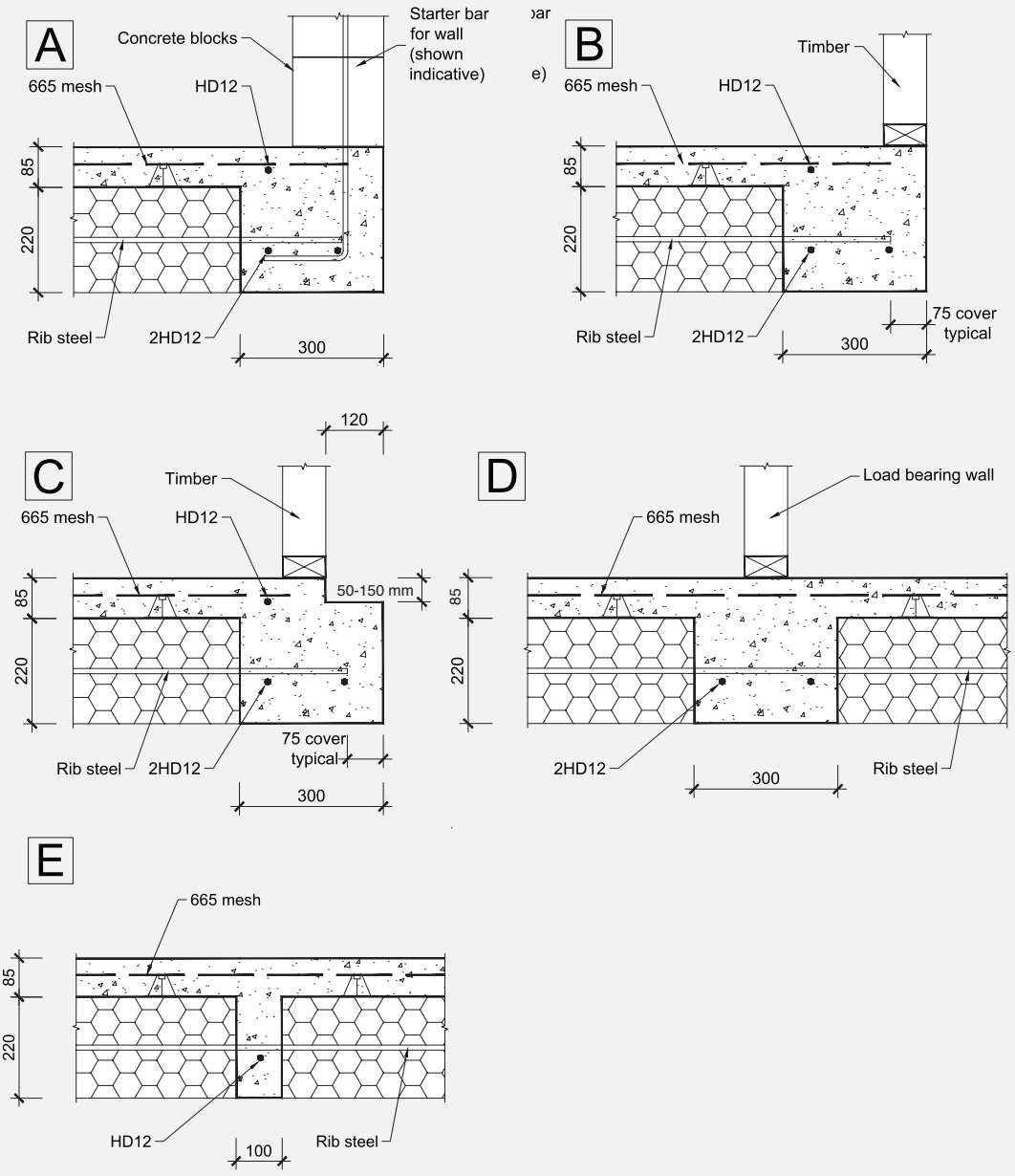

5.0 LATERAL RESISTANCE

5.1 Earthquake Resistance

Unlike conventional foundation systems, the Firth RibRaft® system is not embedded into the ground. Sliding resistance to horizontal seismic loads is provided by frictional contact with the soil. In locations where the Seismic Hazard Factor Z is greater than 0.45, shear keys maybe required to resist seismic loads. Such buildings require specific engineering design and are outside the scope of this document. Refer to Figure 6.

Depending on the wind zone and the weight of the building elements this frictional resistance may not be sufficient to provide sliding resistance to wind loads, and specific shear keys may be required, as detailed in Clause 5.2.

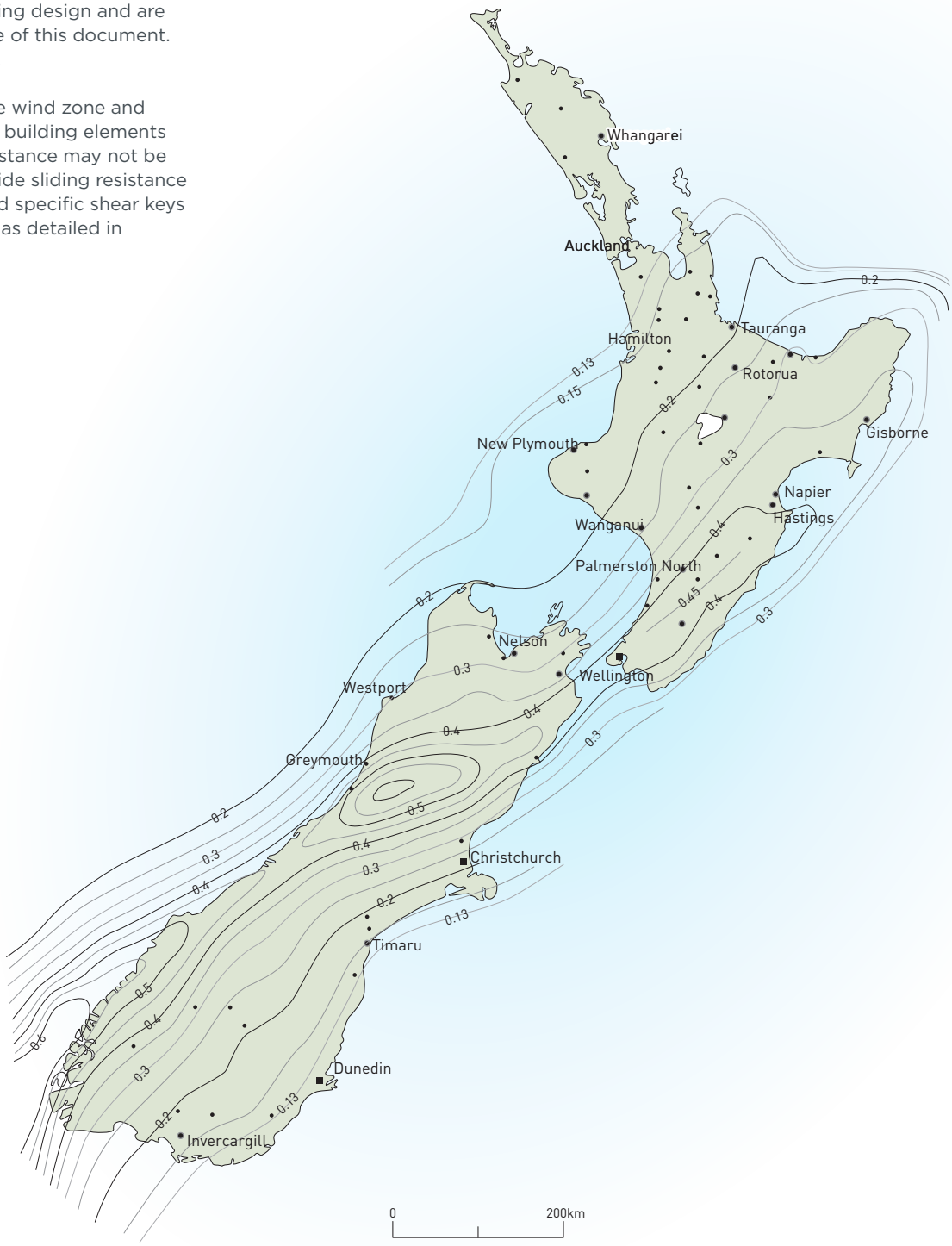

Figure 6
Seismic Hazard Factor Z to NZS 1170.5

5.2 Wind Resistance

The building's bracing demand from wind loading shall be assessed from Section 5 of NZS 3604:2011 for both directions (i.e. along and across the building). The bracing capacity of the system must exceed the greater of the bracing demands determined.

The bracing capacity of the system shall be determined as the sum of the bracing capacity provided by frictional resistance (i.e. friction between the system and the ground) and the bracing capacity provided by the shear keys (if any) necessary to meet the requirements of Clause 5.2.

The bracing capacity provided by frictional resistance shall be determined from Table 4 depending on the building type, roof weight, and floor live loading. The bracing capacity provided by the shear keys shall be the sum of the bracing capacity of the individual shear keys determined as follows. If the shear key is in clay, each shear key shall be considered to contribute 170 BU's. If the shear key is in sand, each shear key shall be considered to contribute 200 BU's. If the bracing capacity of the system, determined from the frictional resistance and the shear keys as described above, is less than the bracing demand further shear keys shall be added until the bracing demand is met.

BUILDING TYPE	ROOF TYPE	GROUND FLOOR EXTERNAL WALLS	SECOND STOREY EXTERNAL WALLS	BU's PROVIDED PER 100M² 1.5KPA	FOR LIVE LOADING OF: 3.0KPA
Single Storey	Light	Light		1630	1746
Single Storey	Heavy	Light		1737	1857
Single Storey	Light	Heavy		1802	1922
Single Storey	Heavy	Heavy		1909	2029
Double Storey	Light	Light	Light	2163	2403
Double Storey	Heavy	Light	Light	2270	2510
Double Storey	Light	Heavy	Light	2335	2575
Double Storey	Heavy	Heavy	Light	2442	2682

Table 4 Bracing Capacity Provided By Frictional Resistance Per 100m² Of Ground Floor Area

5.3 Shear Keys

Shear key piles required by Clause 5.2 must be uniformly distributed around the perimeter of the building, and be located at the edge beam/internal rib junction. Where a shear key is required, the minimum number of shear keys shall be two per floor plan. Where two shear keys are used they shall be placed at diagonally opposite ends of the floor plan.

Construction details of the shear keys shall be as shown on Figure 7. Shear keys shall be a minimum of 900mm long. The holes shall be over-drilled at least 100mm and a polystyrene RibRaft® Shear Key Support placed into the bottom of each hole. This will support only the plastic (wet) concrete and then allow movement of the shear key if settlement of the supporting ground occurs. The effective end bearing of the shear keys is therefore eliminated.

Figure 7 RibRaft® Shear Key

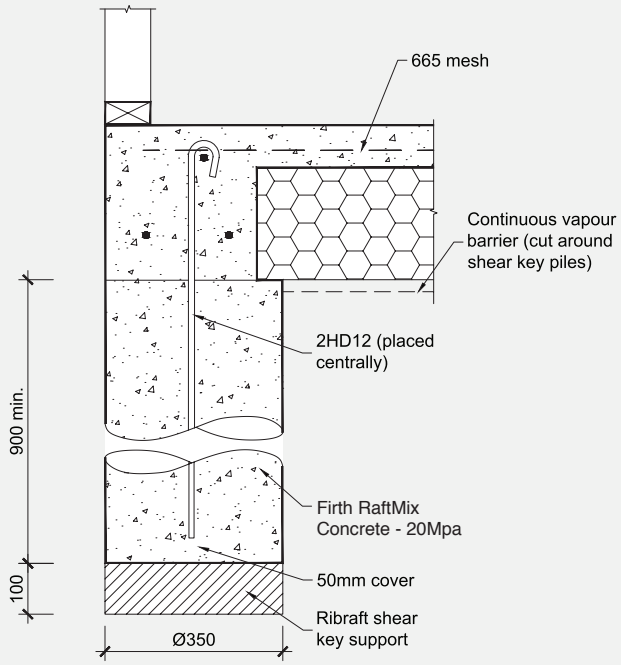

5.4 Design Example For Lateral Resistance Calculation

The following is a short example to demonstrate the process of determining whether shear piles are required.

Consider a 180m^2 single storey home with a light roof located in Palmerston North in a VH wind zone as defined by NZS3604. Assume the building height is 6m with 3m above the eaves. The length for across wind considerations is 15m and the width (along wind) is 12m.

First consider seismic actions. From Figure 6 the seismic hazard factor is 0.4. Since this is less than 0.45 shear keys will not be required for earthquake resistance.

Now consider wind loading. Table 5.5 of NZS3604 requires 95 bracing units per meter (BU/m) across the building and 90 BU/m along. As it's a very high wind zone these figures need to be increased by a factor of 1.3.

The BU demand for across building wind is therefore = 95 x 1.3 x 15 = 1853BU
The BU demand along the building = 90 x 1.3 x 12 = 1404BU

From Table 4 for a single storey light weight roof with 1.5kPa live load the capacity is 1630BU per 100m^2. Therefore for 180m^2 the capacity is 2934BU. As the capacity (2934) is greater than the demand (1853) no shear keys are required.

If the demand had exceeded the capacity then any shortfall can be provided by supplying shear keys in accordance with Section 5.3 with each shear key providing the BU specified in Section 5.2.

6.0 OTHER DESIGN DETAILS

6.1 R-Values

The insulation performance of a building element is measured by the "R-Value". The schedule method is the simplest method to achieve compliance with Clause H1 of the Building Code. Using this method the minimum R-Values required for floors are R1.3 for light timber frame construction, and typically R1.5 for masonry construction. R-values of R1.3 can be used for masonry construction if glazing with greater insulation is used (refer NZBC, Clause H1). If in-floor heating is used the minimum required R-Value is increased to R1.9, and the resistance to thermal movement into the room must be one tenth of that to the outside environment.

The fourth edition of H1 (amendment 3, January 2017) states that "Concrete slab-on-ground floors are deemed to achieve a construction R-value of 1.3, unless a higher R-value is justified by calculation or physical testing". RibRaft® is therefore a deemed to comply solution however in some instances designers may wish to determine the R-value as part of the design process. There are numerous methods for calculating R-values for slabs on ground, with many of the processes giving quite different R-values. NZBC clause H1 prescribed that an "Acceptable methods for determining the thermal resistance (R-values) of building elements are contained in NZS 4214."

The R-values provided in this Manual use the NZS4214 methodology.

If the R-value calculation is required to demonstrate compliance with the Building Code, then the NZS4214 methodology is probably the best alternative due to its refrerence in H1. However, more technically robust calculation methodologies exist and and where the R-values are important, for example heated floors, use can be made of the BRANZ Home Insulation Guide. For these instances edge insulation is also recommended.

When slab edge insulation is specified, it is recommended that Firth HotEdge® is used as it has been designed to be compatable with Firth RibRaft®.

The R-Value of a concrete floor is dependent on the floor area to perimeter ratio, and the details of the floor perimeter. The R-Value for various solutions are illustrated below. The R-Values have been independently calculated using NZS4214:2006 "Methods of Determining the Total Thermal Resistance of Parts of Buildings," though modified for perimeter heat loss using recommendations from the Building Research Establishment.

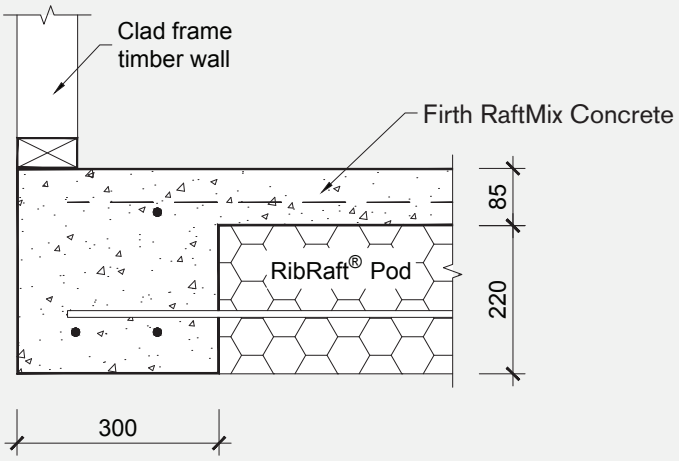

Figure 8
RibRaft® R Values For 90mm Thick Walls On The Floor Edge

	FLOOR AREA TO PERIMETER RATIO M²/M										
	1.00	1.25	1.50	1.75	2.00	2.25	2.5	2.75	3.0	3.5	4.00
R-Value m² °C/W	1.28	1.40	1.52	1.64	1.75	1.86	1.97	2.07	2.17	2.38	2.57

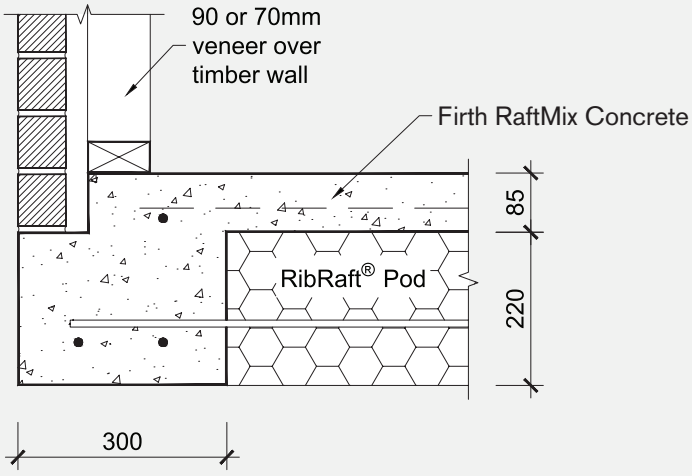

Figure 9
RibRaft® R Values For 70-90mm Thick Veneer, Cavity, and 90mm Walls.

	FLOOR AREA TO PERIMETER RATIO M²/M									
	1.25	1.50	1.75	2.00	2.25	2.5	2.75	3.0	3.5	4.00
R-Value m² °C/W	1.54	1.67	1.80	1.93	2.05	2.17	2.28	2.40	2.62	2.84

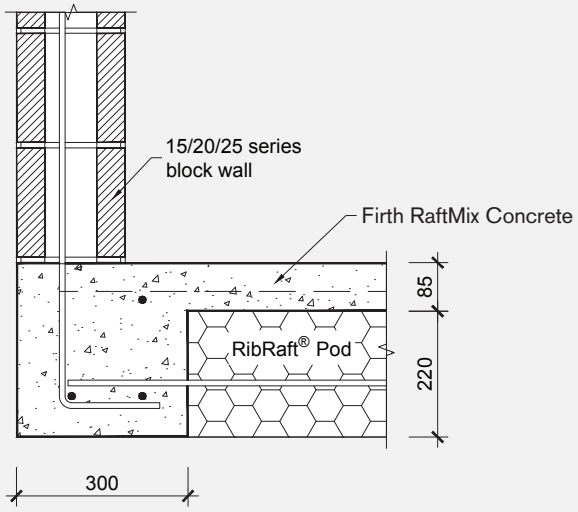

Figure 10
RibRaft® R Values For Various Thicknesses Of Masonry Walls

	BLOCK	FLOOR AREA TO PERIMETER RATIO M²/M									
		1.25	1.50	1.75	2.00	2.25	2.5	2.75	3.0	3.5	4.00
R-Value m² °C/W	15 SERIES	1.48	1.60	1.73	1.85	1.96	2.08	2.19	2.30	2.51	2.72
	20 SERIES	1.54	1.67	1.80	1.93	2.05	2.17	2.28	2.40	2.62	2.84
	25 SERIES	1.59	1.73	1.86	1.99	2.12	2.24	2.37	2.49	2.72	2.95

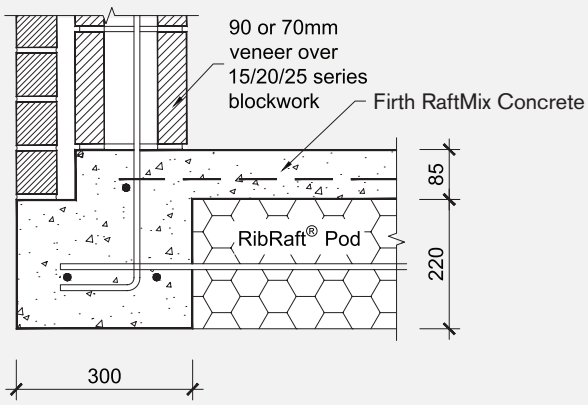

Figure 11
RibRaft® R-Values For 70-90mm Thick Veneer, Cavity, And Various Thickness Masonry Walls

	BLOCK	FLOOR AREA TO PERIMETER RATIO M²/M									
		1.25	1.50	1.75	2.00	2.25	2.0	2.75	3.0	3.5	4.00
R-Value m² °C/W	15 SERIES	1.59	1.73	1.86	1.99	2.12	2.24	2.37	2.49	2.72	2.95
	20 SERIES	1.64	1.78	1.92	2.06	2.19	2.32	2.44	2.56	2.81	3.04
	25 SERIES	1.69	1.83	1.98	2.11	2.25	2.38	2.51	2.64	2.88	3.12

6.2 Shrinkage Control

Shrinkage control joints reduce the risk of unwanted cracks, and their placement needs to be carefully considered where uncontrolled cracking could be unacceptable. Two types are described here: saw cut joints (which are tied joints), and free joints.

6.2.1 Saw Cut Joints

Saw cuts are located at positons in which the concrete is likely to crack due to stresses induced by restrained shrinkage. The aim of providing them is for the concrete to crack at the bottom of the saw cut thus minimizing the potential for a visible crack wandering over the surface. The level of reinforcement provided in a RibRaft® mean that cracks have no structural implications being only an aesthetics issue. Factors to consider are the type of floor finish, the location of ribs and ground beams, underfloor heating, and the effect of piles restraining shrinkage.

Preference should be given to using early entry saws which are used immediately after finishing. Shrinkage control joints cut using diamond blades shall be cut as early as possible which is typically within 24 hours of hardening in summer, and 48 hours in winter. They shall be cut to a depth of 25mm. Shrinkage control joints do not guarantee elimination of all visible or unwanted cracks but should minimise number.

Joints shall be positioned to coincide with major changes in floor plan. Where concrete is to be exposed, for example in a garage, or brittle covering placed over, the maximum intermediate bay sizes shall be limited to 5m. Bay dimensions formed by shrinkage control joints shall be limited to a maximum ratio of length:width of 1.5:1. Shrinkage control joints shall be placed over 100mm wide internal ribs wherever possible. Where a shrinkage control joint runs along the line of a 300mm wide load bearing rib, then the joint shall be located directly above one edge of that rib.

In order to limit the width of cracks at re-entrant, or internal corners, extra steel shall be placed on top of the mesh. These shall be 2-HD12 bars (Grade 500E), 1200mm long tied to the top of the mesh at 200mm centres, with 50mm cover to the internal corner – refer Figure 3.

6.2.2 Free Joints

Where the length of the floor exceeds 30m a free joint shall be provided as detailed in Figure 12. Movement, shrinkage and thermal, will occur over this joint so it shall be positioned to minimize the impact of this movement on floor coverings and wall elements.

Where the bottom of the RibRaft® is not flat (for example the floor incorporates a step down), free joints shall be provided if the distance from the step down to edge of slab exceeds 15m.

Figure 12 Free Joint Details

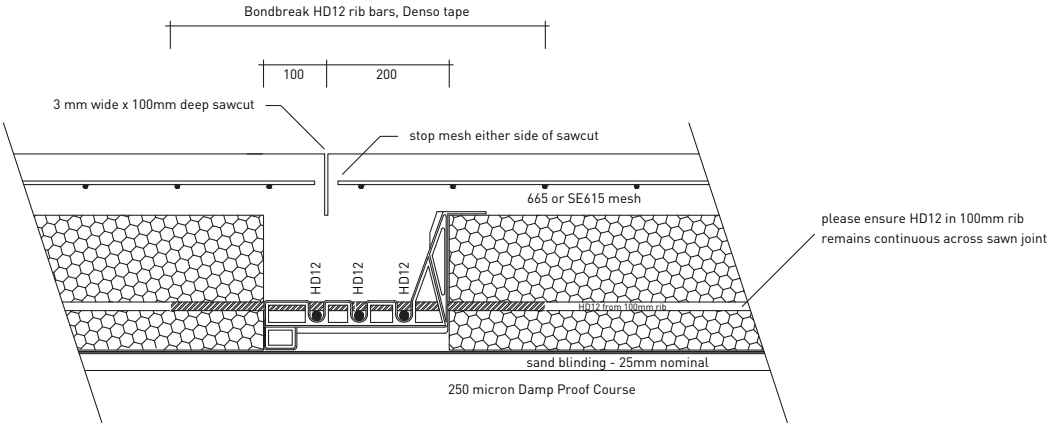

RibRaft® control / free joint detail at 300mm wide thickening
align sawcut with internal corner where possible

6.3 Services Detailing

Two options exist for running services, both of which are appropriate, however some regional Building Control Authorities and Builders have clear preferences. The options being within slab, or under slab. Experience from the Christchurch earthquakes shows that the most seismically robust solution is for services to run within the plane of the pods (within slab).

6.3.1 Within Slab Running of Services

Pipes services can be run within the plane of the pods either exiting out of the side of the perimeter ring beam or going underground at the edge beam. Pipes shall be laid at a fall to comply with NZBC G13/AS1. For pipe up to 65mm diameter the minimum gradient is typically 1 in 40, while for 100mm pipes it's 1 in 60, however greater falls may be required dependent upon the required number of discharge units. Table 5 provides distances from the edge of the slab to pipe surface penetration to achieve minimum pipe gradients. A 300mm pod alternative is often used where the proposed positioning of the service means minimum required gradients cannot be achieved. Where gradients cannot be achieved with a 300mm pod, then service will require to be run under the slab.

Pipes shall be located to pass perpendicular to the ribs and beams and shall not be laid along the length of ribs or beams. Pods are cut as required to achieve the required fall and position. Pipes shall be laid to ensure 15mm concrete cover between pipe and reinforcement in the perimeter beam. All pipes in contact with concrete shall be lagged with an impermeable material of at least 6mm thickness.

Table 5 Maximum Distance From Exterior To Entrance Point Of Plumbing Pipes

PIPE DIAMETER (ID)MM	GRADIENT	MAXIMUM DISTANCE TO EDGE WITH 220MM THICK POD	MAXIMUM DISTANCE TO EDGE WITH 300MM THICK POD
40	1 in 40	3400	6600
50	1 in 40	3000	6200
65	1 in 40	2400	5600
100	1 in 60	1200	4400

6.3.2 Under Slab Running Of Services

For this option, services ducts shall be conveyed underground to their plan location then brought up through the polystyrene pod and the concrete floor slab, within the limitation imposed by Table 8. Services shall not be placed within any concrete except to cross that section of concrete i.e. services shall not run along ribs or edge beams. In accordance with AS/NZS3500.4:2015 pipes penetrating through concrete shall be:

> Installed at right angles to the slab surface.

> Lagged with an impermeable material for the full depth of the concrete penetration.

> Lagging must be at least 6mm thick.

The maximum diameter of the services shall be as outlined in Table 6.

Any services crossing ribs or the edge beam horizontally shall be placed only within the middle third of the member. Except as noted in Figure 13, services crossing the ribs vertically shall also be constrained to the middle third of the width of the edge or internal load bearing rib. Except as noted in Figure 15 at no stage shall any of the reinforcement bars be relocated or cut to allow for the services (it is acceptable, however to cut the mesh). In some instances this will dictate the location of the ribs. The pods shall be cut to allow for this and if necessary, the spacing of the ribs shall be decreased locally. There shall be 600mm minimum clear spacing in each direction between penetrations through the system.

Table 6 Maximum Diameter Of Pipe Services

ELEMENT	VERTICAL SERVICE	HORIZONTAL SERVICE
300mm wide edge beam	50mm nominal bore pipe	100mm NB pipe
500mm localized wide edge beam (1)	100mm NB pipe	100mm NB pipe
300mm wide internal load bearing rib	50 NB pipe	100mm NB pipe
100mm wide internal rib	Nil	100mm NB pipe
Slab	100 NB pipe, or for large services 450mm square see also Note 3	Nil

Notes:

(1) For situations where a 100mm diameter pipe is required to pass vertically through the edge beam, the edge beam shall be locally increased in width to a minimum of 500mm wide. This shall be achieved by keeping flush the outside face of the edge beam and removing 200mm from the pod. The width shall remain at 500mm for a distance of 600mm beyond the service pipe. Refer to figure 14 for details for pipes passing vertically through edge beam and internal rib.

(2) Where a gas pipe line runs through the RibRaft® floor system, in addition to the requirements above, the pipeline shall enter the building through the outside face of the perimeter foundation beam and be located in the plane of the pods. The aim being to ensure that damage to the gas pipe will most likely occur outside the building envelope should movement occur between the ground and RibRaft® in a large earthquake.

(3) Larger penetrations or voids up to 450mm square (e.g. for shower waste/traps) are permitted through the slab provided all the conditions of this paragraph are met. These openings shall be trimmed with 1 HD12 (Grade 500E) bar 1500mm long placed along each side of the opening, tied to the mesh. One set of parallel bars shall be placed on top of the mesh and the other set placed under the mesh. These openings shall not be placed over a rib or edge beam. If necessary, the rib spacing shall be reduced or the pod layout altered to ensure that the opening occurs solely in the slab above a polystyrene pod. Penetrations such as these shall not be installed in garages or other areas where large (>3kN) point loads could be present. Only one penetration greater than 110mm is permitted in the slab above any single pod or part pod. Where two large openings are required to be in close proximity, an internal rib shall separate them. For these large penetrations/voids in the slab, the services shall not be within 25mm of the edges of the void through which they pass, and the opening shall be sealed to prevent materials entering the subfloor cavities. (This type of opening is normally only required for a shower waste/trap and the installation of the shower will ensure that the void is sealed/covered).

A pictorial of some of the above requirements is illustrated in Figure 13 and 14.

Figure 13 Example of Detailing Requirements For Services

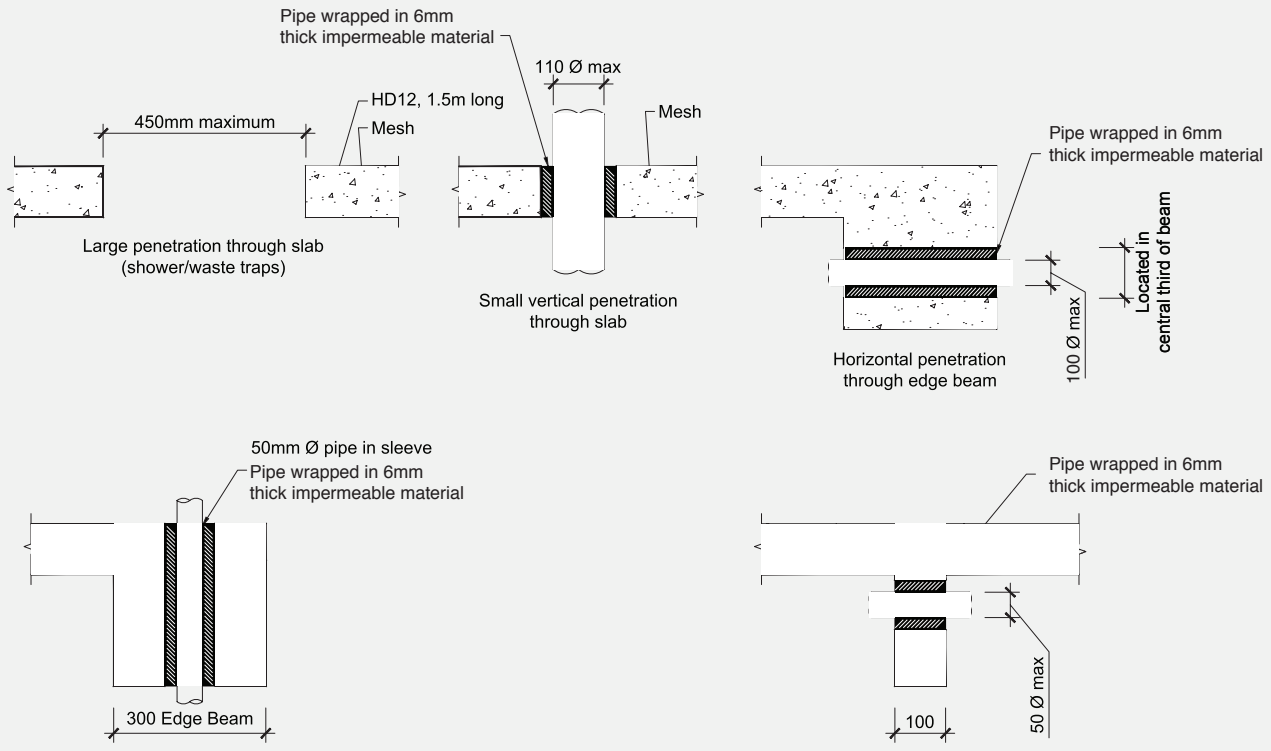

Figure 14
Localised Increase In Width At Edge Beam Where Vertical Service Up To 100mm Diameter Are Required

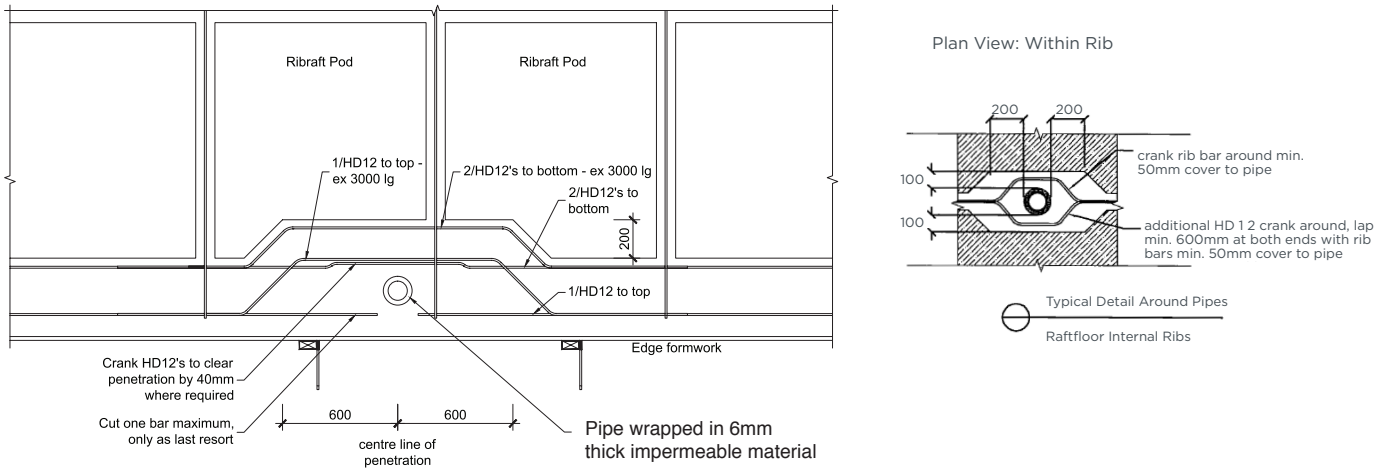

6.3.3 Recesses for Showers

Where showers are rebated up to 50mm into the RibRaft® concrete topping, the details specified shall be in accordance with Figure 15.

Figure 15 Details where recesses of up to 50mm are required for rebated showers

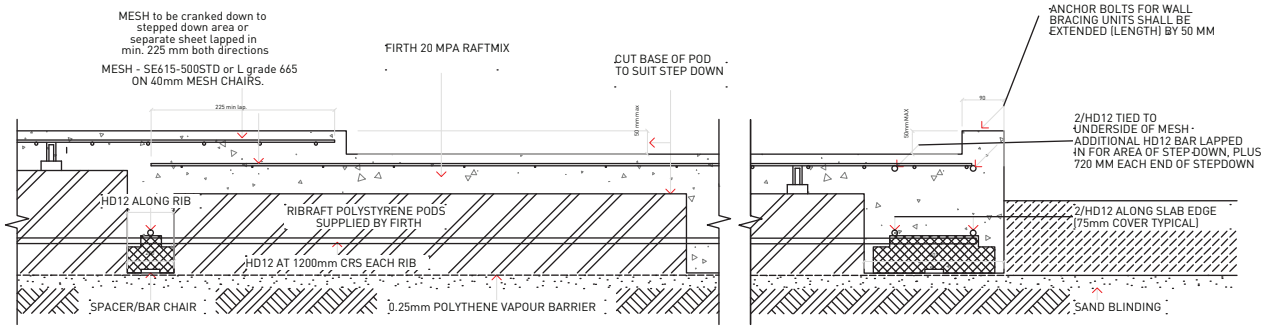

RIB RAFT FLOOR - SET-DOWN DETAIL FOR MAX. 50mm REBATED SHOWER

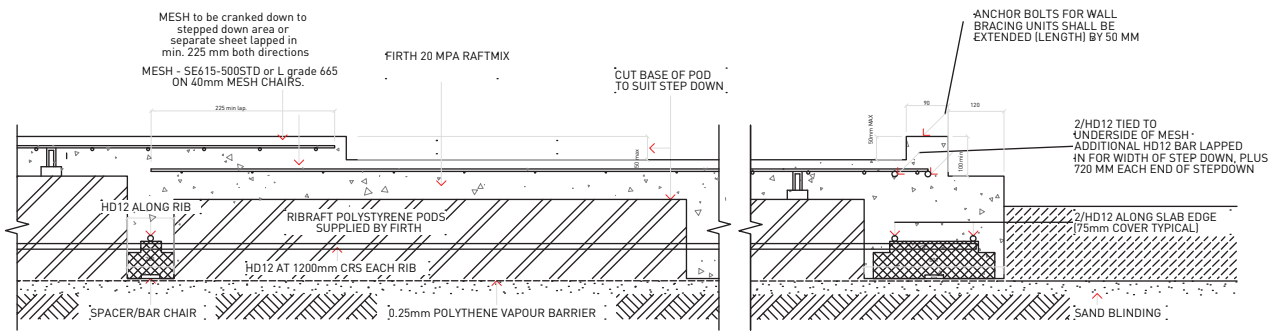

RIB RAFT FLOOR - SET-DOWN DETAIL FOR MAX. 50mm REBATED SHOWER

Figure 16 Details where step downs are required in the floor

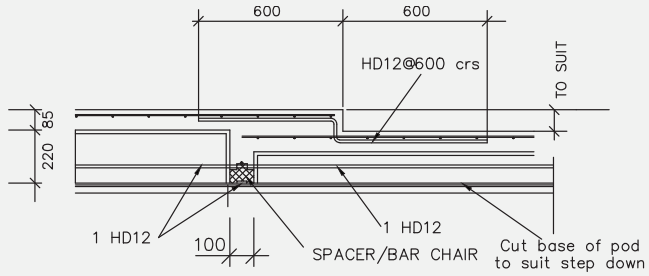

7/S2 SET–DOWN DETAIL FOR STEP UP TO 100mm
1:20

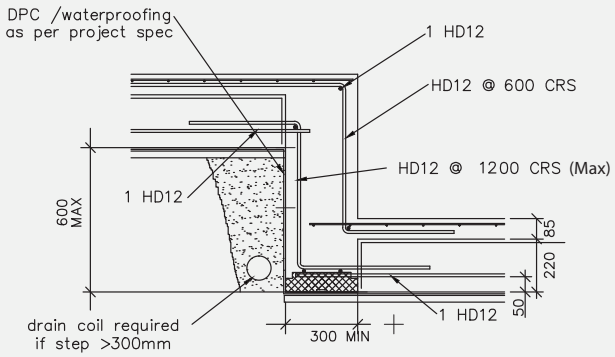

9/S2 SET–DOWN DETAIL IN CONCRETE FOR STEP LESS THAN 600mm
1:20

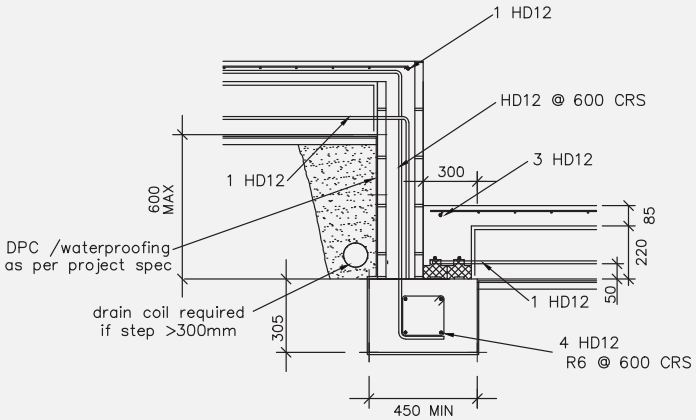

8/S2 SET–DOWN DETAIL IN MASONRY FOR STEP LESS THAN 600mm
1:20

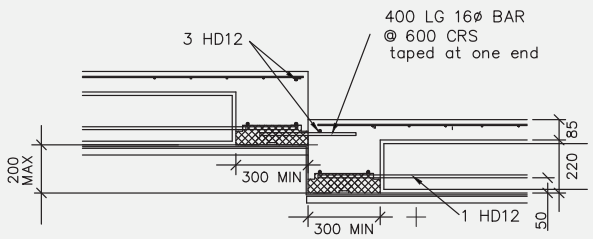

10/S2 SET–DOWN DETAIL FOR STEP 100 TO 200mm FOR SEPARATELY POURED SLABS
1:20

6.3.4 Step Down Of Up To 600mm In The RibRaft® Floor

Where the site topography requires a step down in the slab, steps of up to 600mm can be accommodated using one of the details provided in Figure 16. A step down in the RibRaft® floor system anchors the floor in that location with respect to volume changes associated with drying shrinkage. As required by 6.2.2, a free joint shall be provided if the distance from the step down to the slab edge exceeds 15m.

SECTION: INSTALLATION INFORMATION

2

1.0 THIS SECTION DETAILS THE INSTALLATION INFORMATION REQUIRED FOR THE FIRTH RIBRAFT® FLOOR SYSTEM (THE SYSTEM). FULL INFORMATION ON THE DESIGN PROCEDURES NOT REQUIRING SPECIFIC ENGINEERING INPUT, AND REQUIREMENTS FOR THE SITE ASSESSMENT ARE DESCRIBED IN SECTION 1 OF THIS MANUAL (DESIGN INFORMATION). WHERE STANDARDS ARE REFERENCED INTHIS MANUAL THESE SHALL INCLUDE THE LATEST AMENDMENTS.

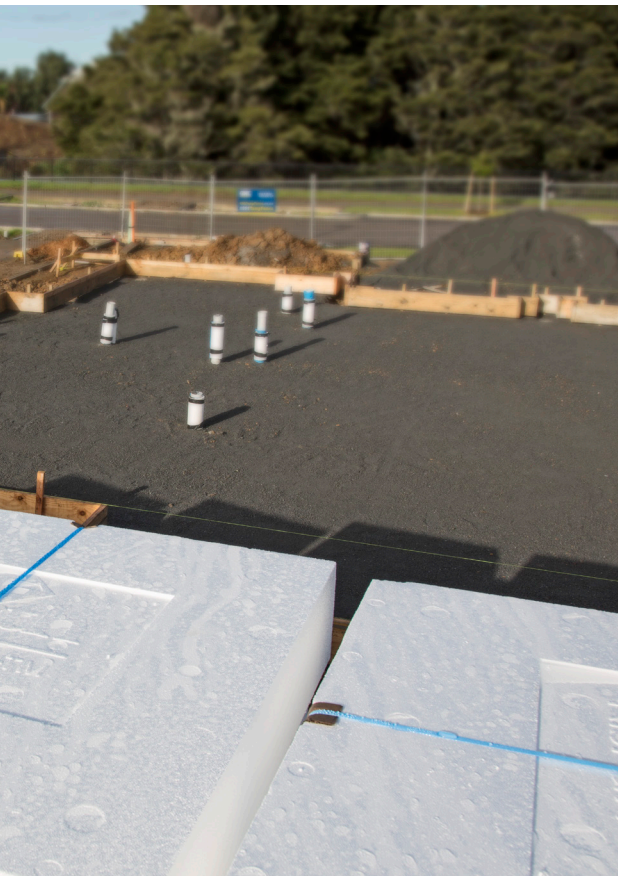

2.0 SITE REQUIREMENTS

2.1 General

The site requirements of this Manual are concerned solely with the soil conditions under or immediately adjacent to the system. If a site does not comply with this Manual, the system shall be subject to specific engineering design.

This Section shall only apply for building sites such that:

> The ground is as specified in Section 1 of this Manual;

> Any system erected at the top of a slope (whether fill compacted in accordance with NZS4431, or natural ground) shall be located as shown in Figure 1 so that the finished ground is always outside the dashed line shown. (The vertical distance, V, shall be measured to 50mm below the underside of the slab).

Where the finished ground does not comply with Figure 1, the slope shall be retained by a specifically designed retaining wall.

2.2 Temporary Excavations

No excavation shall take place at a location or in a manner where the stability of the foundation material is likely to be compromised. The backfilled material shall match the compaction and strength of, and have similar properties to, the surrounding material. The sides of the excavation shall be propped as necessary.

Temporary excavations shall be open for no longer than 48 hours and shall take place only above the critical depth line as shown on Figure 2. Should temporary excavations be required below this line, specific engineering design is required.

2.3 Surface Water

Surface water from the site shall not flow across the slab platform. For example, on cut and fill sites the ground uphill from the system shall be graded to direct any surface run-off away from the system as shown in Figure 3.

Figure 1
Relationship
Of RibRaft®
To Sloping
Ground Surface

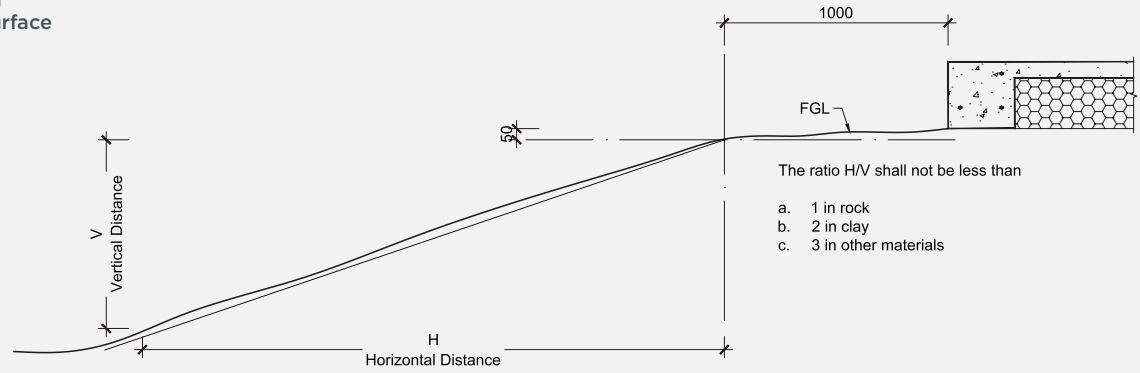

Figure 2
Temporary
Excavation
Limited

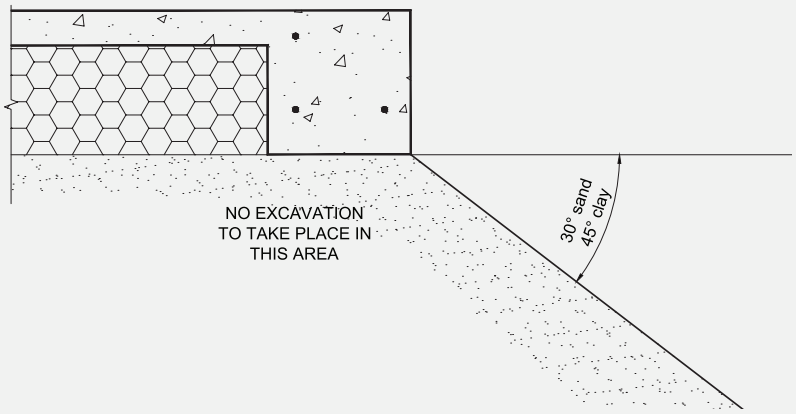

Figure 3
Site Grading

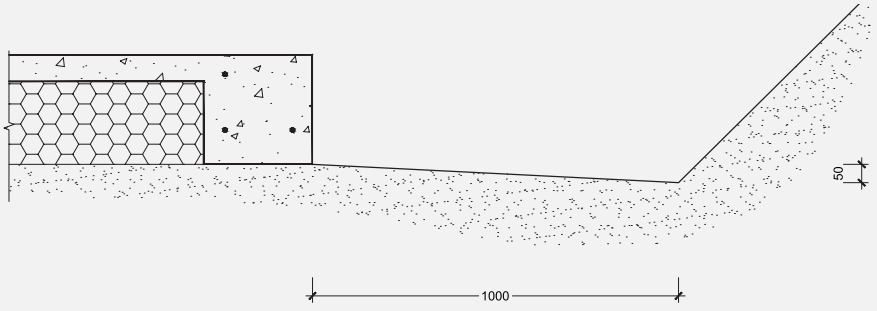

3.0 INSTALLATION PROCEDURE

3.1 Site Preparation

All vegetation, topsoil and other organic or deleterious material shall be removed from the area to be covered by the building (formation area) prior to commencing construction of the system.

3.2 Earthworks

The formation area shall be cut or filled to a level approximately 330mm below finished floor level. Where fill is required to achieve this level, the fill shall be certified by a geotechnical engineer (outside the scope of this Manual) or shall be granular fill in accordance with Clause 7.5.3 of NZS 3604:2011 "Timber Framed Buildings". The formation area shall also extend a distance equal to the thickness of the fill material beyond the slab perimeter as shown in Figure 4. The installer shall confirm the acceptability of the ground over the entire building platform before proceeding with the construction. Refer to Clause 3.5 of Section 1 (Design Information) for requirements.

Figure 4 Plan of Formation Area

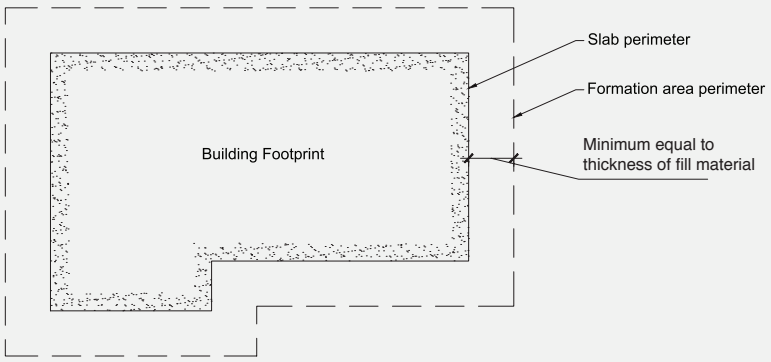

3.3 Shear Keys

Where shear keys are required, the holes shall be drilled following the site clearing and earthworks, in accordance with Clause 4 in this section, and prior to the construction of the system commencing.

3.4 Plumbing and Services

Plumbing and services required beneath the system should preferably be conveyed underground to their plan location then brought up through the system.
The trenching, placing, and bedding of the pipes/ducts and the backfilling of the trenches shall conform to the requirements of the consent documentation. Services shall not run along ribs or edge beams. The maximum diameters of the services shall be as dictated in Clause 6.3 of Section 1.

Where required, the services can be installed by removing unnecessary polystyrene and placing pipes within the pod depth. All pipes shall be held firmly in place and have temporary end covers. Any services crossing ribs or the edge beam horizontally shall be placed only within the middle third of the member. Except as noted in Figure 14 (Section 1) services crossing the ribs vertically shall also be constrained to the middle third of the width of the edge or internal load bearing rib. Except as noted in Figure 13 (section 1) at no stage shall any of the reinforcement bars be relocated or cut to allow for the services (it is acceptable, however to cut the mesh). In some instances this will dictate the location of the ribs. The pods shall be cut to allow for this and if necessary, the spacing of the ribs shall be decreased locally. There shall be 600mm minimum clear spacing in each direction between penetrations through the system.

Where the services pass through the top of the pods, the opening shall be sealed to prevent materials entering the subfloor cavities. (This can be achieved with Denso tape and a type of easily compressible foam.)

Larger penetrations or voids that are required, up to 450mm square (e.g. for shower waste/traps), shall be installed in accordance with all the conditions of this paragraph. These openings shall be trimmed with 1 HD12 bar (Grade 500E) 1500mm long placed along each side of the opening, tied to the mesh. One set of parallel bars shall be placed on top of the mesh and the other set placed under the mesh. These openings shall not be placed over a rib or edge beam. If necessary, the rib spacing shall be reduced or the pod layout altered to ensure that the opening occurs solely in the slab above a polystyrene pod. Penetrations such as these shall not be installed in garages or other areas where large (>3kN) point loads could be present. Only one penetration greater than 110mm is permitted in the slab above any single pod or part pod. Where two large openings are required to be in close proximity, an internal rib shall separate them. For these large penetrations/voids in the slab, the services shall not be within 25mm of the edges of the void through which they pass, and the opening shall be sealed to prevent materials entering the subfloor cavities. (This type of opening is normally only required for a shower waste/trap and the installation of the shower ensure that the void is sealed/covered).

Where a recess of up to 50mm is required in the topping to provide a rebate for a shower, the construction details shall be as shown in Figure 15 (Section 1).

3.5 Sand Blinding

A layer of sand shall be placed, screeded and compacted over the building platform, extending to the outside edge of the perimeter foundation, refer Figure 5. The maximum thickness of this blinding layer shall be 50mm. The surface shall be level and a minimum of 305mm below finished floor level. A small plate compactor, vibrating roller or similar, should be used to compact the sand blinding layer. When the building platform is clay, it is essential that the blinding sand is compacted onto a clay surface that has not been softened by construction activities. If the clay has been softened (i.e. has a muddy surface layer due to construction activities), remove the softened material from under the RibRaft® ribs before placing the sand. If excavation lowers the clay surface to more than 50mm below the underside of the RibRaft®, fill shall be placed in accordance with Clause 7.5.3 of NZS 3604:2011 “Timber Framed Buildings”. The sand is required to be level to ensure that pods remain stable throughout the installation of the system.

3.6 Damp Proof Membrane

The damp proof membrane (DPM) material shall be polyethylene sheet in accordance with NZS 3604:2011. The DPM shall be laid over the entire building platform directly on top of the sand blinding layer, extending to the outside of the edge beam – refer Figure 5 below. The joints shall be lapped not less than 150mm and sealed with pressure sensitive tape not less than 50mm wide. All penetrations of the DPM by plumbing and services or punctures during construction shall also be sealed with pressure sensitive tape. The DPM may extend beyond the edge of the slab i.e. underneath the formwork, or may be folded and stapled up the inside of the formwork. The minimum requirement is that the DPM extends to the outside of the edge beam. It is very important that the DPM is not bunched up at the formwork. The installer shall ensure a square and tidy finish at the underside and at all corners of the edge beam.

Figure 5 Sand blinding / DPM / Formwork Details

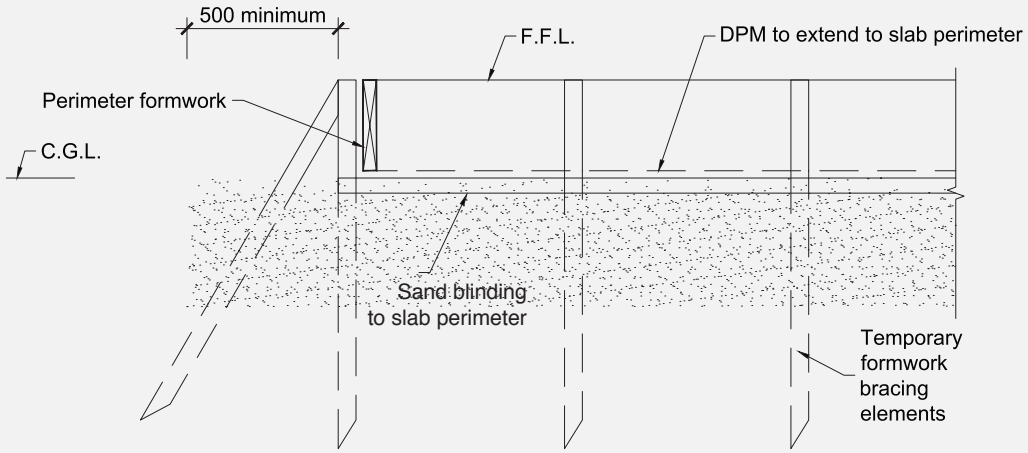

3.7 Edge Formwork

The edge formwork shall be constructed ensuring that the requirements of NZS 3109:1997 “Concrete Construction” are adhered to. The formwork shall be adequately supported and braced to prevent any buckling or warping. If the wall is to be constructed in masonry veneer, formwork for a masonry veneer rebate should be adequately fixed to the perimeter formwork.

Thorough cleaning of re-useable formwork and the use of release agents enhances the life and performance of formwork and maintains a quality surface finish.

3.8 Laying the Pods and Spacers

The Firth RibRaft® polystyrene pods shall be laid out over the DPM in a regular waffle pattern ensuring direct contact with the ground across the entire pod. The edge beam shall be formed using the Firth approved 300mm spacers (refer Figure 9). These shall be placed at a maximum of 1200mm centres along the perimeter of the slab and one per pod or part pod. Ribs supporting a load bearing wall shall be formed using a minimum of one Firth approved 300mm spacer along the edge of each pod or part pod.

Except where a 300mm wide rib is required, each pod or part pod shall always be separated by 100mm using a minimum of one Firth approved 100mm spacer along each edge of each pod or part pod. The ribs in both directions shall form a waffle pattern throughout the slab. It is essential that the ribs and edge beams are straight when the concrete is poured, i.e. the pods need to be lined up. Figure 6 shows a detailed layout of the pods and spacers.

Where the shape of the house plan dictates, it may be more practical to consider the floor to be made up of different segments. The pods in each segment shall be in a regular waffle pattern – refer right hand side of Figure 7. Where these segments meet, the pods shall be cut to suit and the ribs made to join.The non right-angle rib junctions created by this approach are acceptable.

Alternatively, it is also acceptable to keep the orientation of the pods constant throughout the plan and have non right-angle junctions between the ribs and edge beam – refer left hand side of Figure 7.

As can be seen from Figure 7, it is not necessary for the pods to line up perfectly with the edge beam. It is acceptable to cut the pods (i.e. use part pods).

Figure 6 Detailed layout of Pods and spacers (mesh and top steel omitted for clarity)

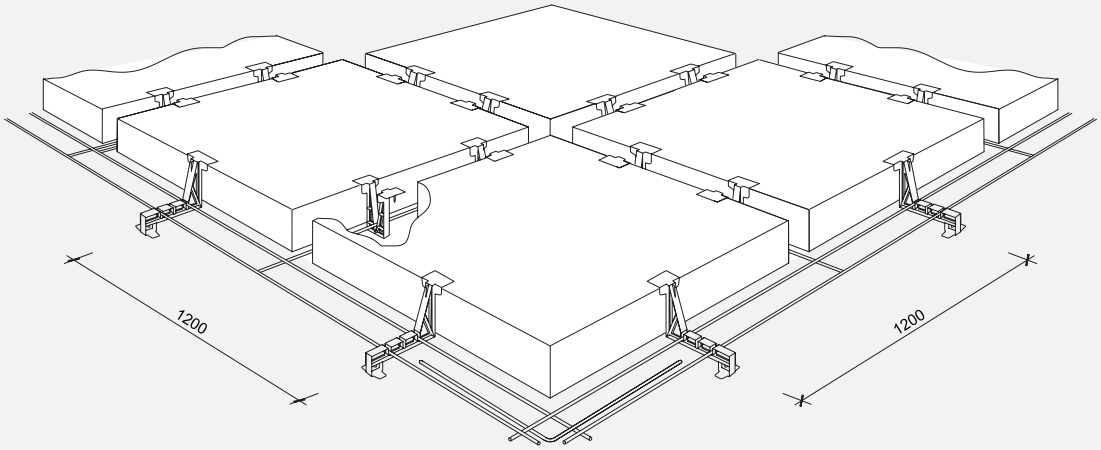

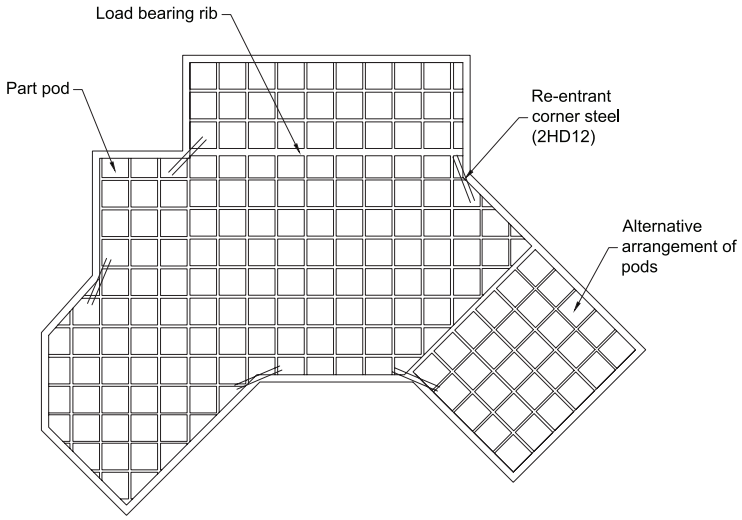

Figure 7 Typical Pod And Rib Layout

3.9 Reinforcing Steel

Reinforcing bars shall conform to NZS 4671:2001 “Steel Reinforcing Materials”. All bars shall be of deformed type (Grade 500E). All bends shall be made cold without fracture and in accordance with the bend diameters given in NZS 3109 “Concrete Construction”. Welded lap joints are not permitted.

Reinforcing steel in the slab shall consist of Welded Reinforcing Mesh complying with AS/NZS 4671:2001 with a minimum weight of 2.27kg/m, a lower characteristic stress of 500MPa, square configuration of orthogonal bars between 150 to 200mm centres, and ductility class L or E, hereafter referred to as “mesh”. The presence of Class E reinforcing bars in the ribs and beams provides adequate ductility of the system which allow the use of class L mesh. Typically the topping mesh reinforcement will be 665 mesh (class L) or SE62 ductile mesh, each being equally applicable

Figure 10 shows the detailed layout of the spacers and the steel in the edge beam and the standard ribs.

3.9.1 Edge Beam Steel

Two edge beam reinforcing bars shall be placed in the bottom of the edge beam and supported in the correct position by the Firth spacers, as shown in Figure 10. One edge beam bar shall be tied below the mesh at the perimeter of the area covered by the polystyrene pods as shown in Figure 10.

All steel shall be lapped a minimum of 60 bar diameters (720mm for 12mm steel). Tying of the edge beam steel is only required at corners. Figure 8 shows the layout for the edge beam bottom steel bars at the corner. The inner bottom bars and the top bars shall cross each other and extend to 75mm from the outside face of the edge beam as shown. These bars shall be tied together where they cross. For solutions using veneer rebates the top bars shall terminate 50mm from the inside face of the rebate and be tied where they cross.

3.9.2 Rib Steel

Rib reinforcing steel shall be placed in the bottom of the internal ribs and supported in the correct position by the Firth or Wilton Joubert spacers (WJ). Figure 9 shows the detail of the Firth and WJ spacers, and Figure 10 shows a detailed section identifying how the steel is located in the spacers. The 300mm spacer shall be used for the 300mm wide internal ribs. These spacers ensure that cover to DPM below the base is greater than 45mm and cover to the exterior perimeter is 75mm.

All steel shall be lapped a minimum of 60 bar diameters (720mm for 12mm steel). At junctions with the edge beam, each rib steel bar shall sit on top of the edge beam bars, and extend to the outermost bar. The 75mm cover to the edge of the beam shall still be allowed for. One HD12 bar (Grade 500E) shall be placed in the bottom of each 300mm wide rib. For perimeter 300mm ribs a HD12 bar is also required in the top at the beam.

3.9.3 Mesh Reinforcing

Mesh reinforcing shall be placed over the pods and supported on 40mm mesh chairs spaced at a minimum of 1200mm centres, with at least two mesh chairs placed per pod and at least one per part pod. At laps the overlap of the outermost cross wires of the sheets shall be the spacing of the wires plus 50mm.

3.9.4 Re-entrant Corner Steel

Two HD12 bars (Grade 500E), 1200mm long tied to the top of the mesh at 200mm centres, with 50mm cover to the internal corner as detailed in Figure 7 (this steel is to help reduce the width of cracks that may develop at this location)

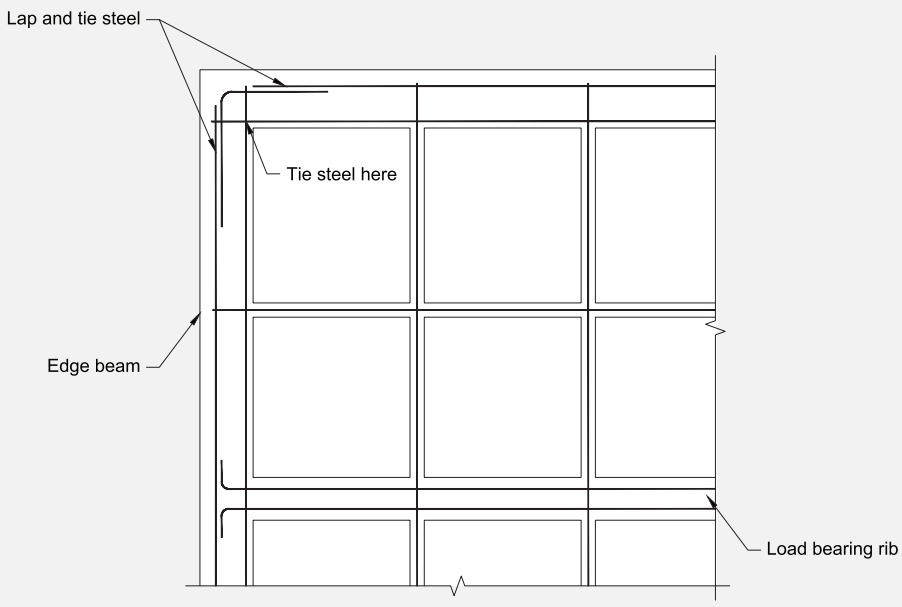

Figure 8 Corner steel layout

3.10 Concrete Installation

To comply with this manual, Firth Certified Concrete® must be used. Concrete placing, finishing and curing shall be in accordance with NZS 3109:1997, Clause 7.

3.10.1 Placing

Only Raftmix or Raftmix25 concrete supplied by Firth Industries, shall be used in the floor. These two different concrete mixes shall be used in the following instances:

> Raftmix – a 20MPa 100mm slump mix available as a pump mix suitable for 100mm pump lines available in either a 13mm or more usually a 19mm nominal aggregate size, or as a structural (non-pump) mix

> Raftmix25 – a 25MPa 100mm slump mix available as a pump mix suitable for 100mm pump lines available in either a 13mm or more usually a 19mm nominal aggregate size, or as a structural (non-pump) mix. This mix shall be specified for buildings constructed in the 'sea spray zone' (i.e. within 500m of the sea including harbors, within 100m of tidal estuaries or inlets, on offshore islands and elsewhere defined as exposure Zone D in 4.2.3.3 of NZS3604).

Figure 9 Spacer Details

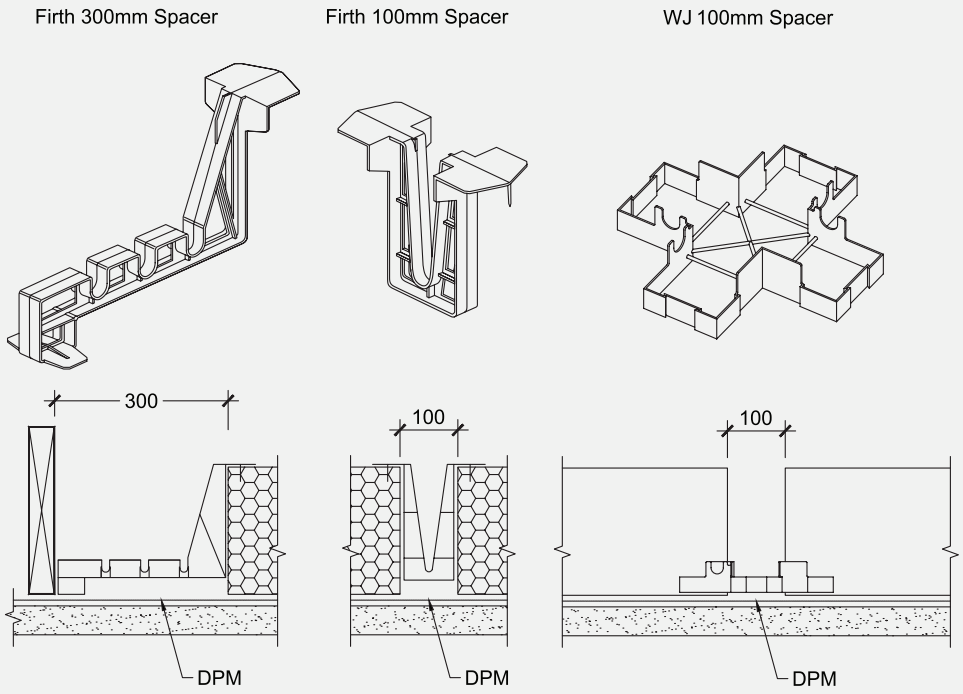

The concrete supplied by Firth shall be poured in such a way to ensure that the pods remain in position during placing (Firth recommends that small amounts of concrete be placed on top of the pods prior to the ribs being filled). The concrete shall be compacted with the use of an immersion vibrator around all steel and into all corners of the formwork.

3.10.2 Finishing

Screeding with the aid of a level shall commence immediately after compaction. Unless specifically installed as a screeding datum, the top of the formwork shall not be assumed as level and thus shall not be used for screeding purposes. Final finishing with a trowel shall take place after all the bleed water has evaporated. The edge of the slab and rebates shall be tooled to prevent chipping of the top of the slab.

Early age care of the slab shall be in accordance with good trade practice appropriate for the weather conditions – refer CCANZ website sections if further guidance is required:

www.ccanz.org.nz/page/Early-Age-Crack-Control.aspx	Early Age Crack Control
www.ccanz.org.nz/page/Hot-and-Cold-Weather-Concreting.aspx	Hot and Cold Weather Concreting

The surface shall be a blemish-free surface to class U3 finish (Refer NZS 3114:1987 “Specification for Concrete Finishes”).

3.10.3 Curing

Proper curing of the concrete must take place immediately after finishing the concrete. One of the following methods of curing is recommended:

> Ponding or continuous sprinkling of water.

> Placing a wet covering or plastic membrane over the slab.

> The use of liquid membrane curing compounds. However if these are used, they must be compatible with any subsequent applied surfacing.

3.11 Shrinkage Control Joints

Shrinkage control joints reduce the risk of unwanted cracks, and their placement needs to be carefully considered where uncontrolled cracking could be unacceptable. Two types are described here: saw cut joints (which are tied joints), and free joints.

3.11.1 Saw Cut Joints

Saw cuts are located at positons in which the concrete is likely to crack due to stresses induced by restrained shrinkage. The aim of providing them is for the concrete to crack at the bottom of the saw cut thus minimizing the potential for a visible crack wandering over the surface. The level of reinforcement provided in a RibRaft® mean that cracks have no structural implications being only an aesthetics issue. Factors to consider are the type of floor finish, the location of ribs and ground beams, underfloor heating and the effect of piles restraining shrinkage.

When warm sunny days are followed by cool nights, the change in temperature can cause cracking. Hence preference should be given to using early entry saws which are used immediately after finishing. Shrinkage control joints cut using diamond blades shall be cut as early as possible which is typically within 24 hours of hardening in summer, and 48 hours in winter. They shall be cut to a depth of 25mm. Shrinkage control joints do not guarantee to eliminate all visible or unwanted cracks.

Joints shall be positioned to coincide with major changes in floor plan. Where concrete is to be exposed, for example in a garage, or brittle covering placed over, the maximum intermediate bay sizes shall be limited to 5m. Bay dimensions formed by shrinkage control joints shall be limited to a maximum ratio of length:width of 1.5:1. Shrinkage control joints shall be placed over 100mm wide internal ribs wherever possible. Where a shrinkage control joint runs along the line of a 300mm wide load bearing rib, then the joint shall be located directly above one edge of that rib.

In order to limit the width of cracks at re-entrant, or internal corners, extra steel shall be placed on top of the mesh. These shall be 2-HD12 bars (grade 500E), 1200mm long tied to the top of the mesh at 200mm centres, with 50mm cover to the internal corner – refer Figure 7.

3.11.2 Free Joints

Where the length of the floor exceeds 30m a free joint shall be provided as detailed in Section 1, Figure 12. Movement, shrinkage and thermal, will occur over this joint so it shall be positioned to minimize the impact of this movement on floor coverings and wall elements.

Where the bottom of the RibRaft® is not flat (for example the floor incorporates a step down), free joints shall be provided if the distance from the step down to edge of slab exceeds 15m.

Figure 10 Detailed Section

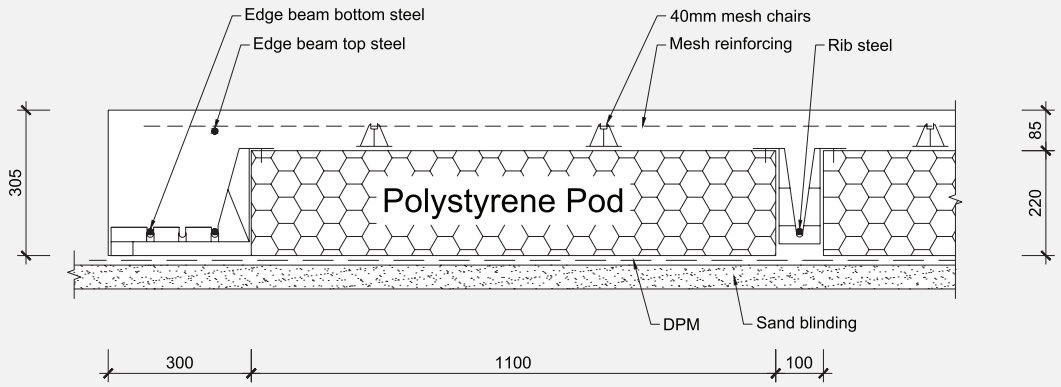

3.12 Removal of Formwork

The formwork shall not be removed prior to 12 hours after the slab has been finished. No installation loads are to be placed on the system before adequate curing has taken place.

3.13 Masonry Veneer

Where the building is to be clad with masonry veneer, the rebate in the edge beam shall be waterproofed with a bituminous sealer due to the possibility of ponding of water. Firth recommends a Flintcote® or equivalent coating on both the vertical and horizontal faces of the rebate.

3.14 Landscaping/Paving

Landscaping and/or paving adjacent to the slab shall be kept as a minimum the specified distance below finished floor level as required by NZS 3604:2011. The landscaping shall allow for large trees to be kept sufficiently away from the edge of the slab.This is to prevent the tree roots from disturbing the soil moisture conditions under the slab. As a guide, trees should be as far away from the edge of the slab as they are tall when fully grown.

3.15 Ongoing Maintenance

The building owner shall ensure that the ground surrounding the system be maintained so that the integrity of the system is not jeopardised. In other words, at no time shall the ground immediately adjacent to the system be allowed to settle away to expose the underside of the slab.

4.0 SHEAR KEYS

Shear keys, if required, shall be provided to conform to the requirements of Section 1 of this Manual. Holes for the shear keys shall be drilled at least 1000mm deep. Into the bottom of each hole a RibRaft® Shear Key Support shall be placed. Every precaution shall be taken to ensure that the shear key support is laid level and at the base of the hole. The minimum depth of concrete placed on the support shall be 900mm. Refer to Figure 11 for construction details.

The connection steel (2HD12 Grade 500E) shall be secured in place and held during pouring to ensure the bars are correctly located. The concrete for the shear keys can be placed separately to the rest of the floor and shall be finished level to the top of the sand blinding layer, or poured in one pour with the RibRaft® floor. If poured separately the top surface of the shear key shall be finished rough to ensure a good join to the Firth Raftmix concrete in the system and the DPM shall be neatly cut around the shear keys.

Figure 11 Shear Pile Construction Detail

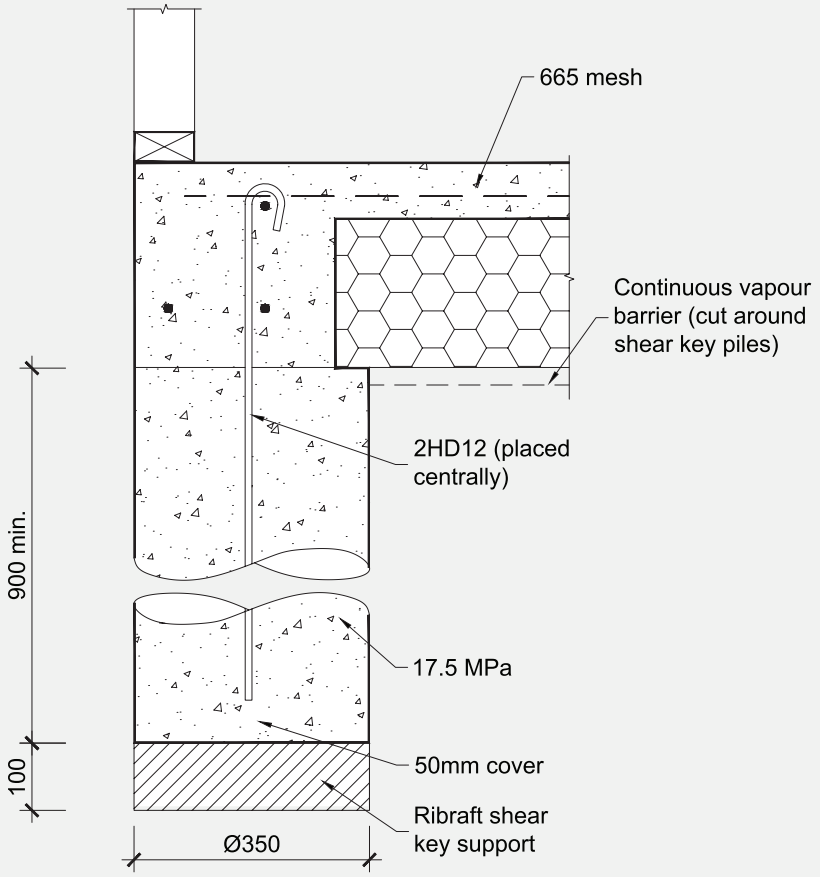

SECTION: VERIFICATION

3

1.0 DESIGN

Verification that the design complies with the structural limitation outlined in this Manual is the responsibility of the designer, and shall be confirmed by the Building Control Authority issuing the Building Consent. Solutions outside the limitations outlined in this Manual will require specific engineering design.

2.0 CONSTRUCTION

The RibRaft® foundation system has been designed to accommodate structures complying with the non specific design standards NZS3604 or NZS4229. With these types of structures the Building Control Authority specifies the inspections required and often conducts these. A similar construction verification process shall be applied to the RibRaft® system.

To assist inspection the following check list has been prepared for structures complying with the limitation:

PRE-POUR INSPECTION CHECK LIST

- GOOD GROUND CONFIRMED AS PER NZS3604, CLAUSE 3.1.3. OR SCALA OR SHEAR VANES TESTS CONFIRM ADEQUATE BEARING CAPACITY.
- VEGETATION, TOPSOIL, ORGANIC OR DELETERIOUS MATERIAL REMOVED.
- PROXIMITY TO SLOPE-GROUND SURFACE IS ALWAYS ABOVE DASH LINE SHOWN IN FIGURE 1.
- SHEAR PILES (WHERE REQUIRED) IN PLACE AND REINFORCEMENT PROTRUDING.
- FORMATION AREA EXTENDS AT LEAST THE DEPTH OF GRANULAR FILL BEYOND BUILDING FOOTPRINT.
- STEPS IN THE FORMATION ARE DETAILED IN ACCORDANCE WITH THIS MANUAL.

Figure 1
Relationship of RibRaft® To Sloping Ground Surface

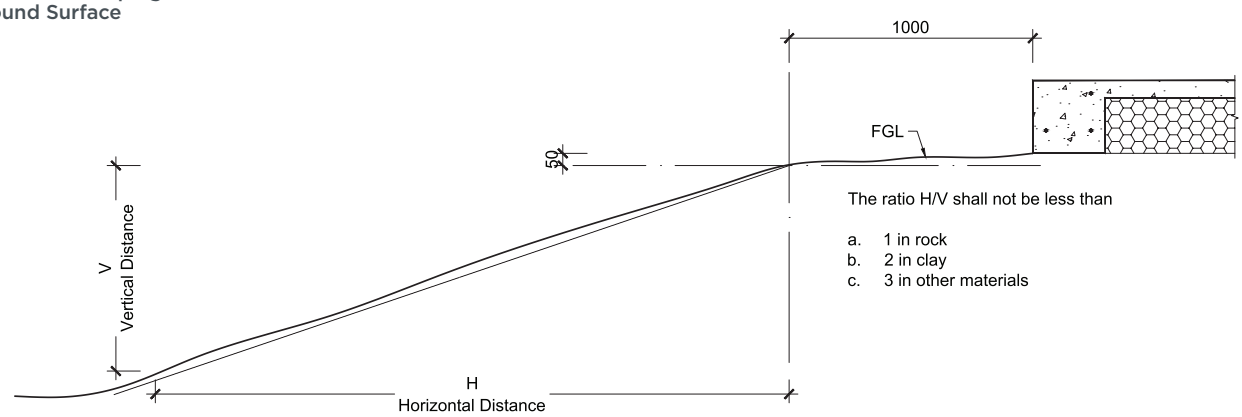

CODEMARK
CM70056

PRE-LAYOUT INSPECTION CHECK LIST: DAMP PROOF MEMBRANE IN PLACE

PERIMETER FOUNDATION	○ WIDTH 300MM(1) ○ REINFORCEMENT 2 X HD12 BOTTOM, 1 X HD12 TOP ○ FIRTH SUPPLIED SPACER USED AT 1.2M MAXIMUM CENTRES
INTERNAL RIBS	○ WIDTH 100MM ○ REINFORCEMENT 1 X HD12 ○ FIRTH SUPPLIED SPACER, MAX SPACING OF ONE PER POD OR PART POD
LOAD BEARING RIBS	○ WIDTH 300MM ○ REINFORCEMENT 2 X HD12 BOTTOM ○ FIRTH SUPPLIED SPACER, MAX SPACING OF ONE PER POD OR PART POD
PODS	○ FIRTH SUPPLIED RIBRAFT® POD
MESH	○ 40MM CHAIRS, 1.2M MAX CENTRES, MIN TWO PER POD OR ONE PER PART POD ○ MESH IN PLACE AND 665 OR SE62 ○ MESH LAPS OVERLAP OF OUTERMOST CROSSWIRE = MESH SPACING + 50MM
REINFORCEMENT	○ 2 X HD12 BARS 1.2M LONG PROVIDED AT RE-ENTRANT CORNERS ○ LAPS FOR 12MM REINFORCEMENT MINIMUM OF 720MM
CONCRETE	○ COVER TO PODS MINIMUM OF 85MM OR 110MM IF INFLOOR HEATING USED. ○ FIRTH RAFTMIX ORDERED
SERVICE PENETRATIONS	○ NO REINFORCEMENT (WITH EXCEPTION OF MESH) CUT TO ALLOW PASSAGE OF SERVICE PIPES. REFER CLAUSE 6.3 OF SECTION 1 FOR EXCEPTIONS ○ PIPES WRAPPED WITH MINIMUM 6MM THICKNESS OF IMPERMEABLE COMPRESSIBLE MATERIAL WHERE IN CONTACT WITH CONCRETE ○ DIAMETER/SIZE OF PENETRATIONS AS PER TABLE 6, SECTION 1 OF THIS MANUAL

(1) At locations of service penetrations the width of the perimeter foundation maybe locally increased. Refer Figure 14 Section 1 for details.



CONCRETE & MASONRY PRODUCTS: A SUSTAINABLE BUILDING OPTION & SOLUTION

- ✓ Environmentally compliant manufacturing plants
- ✓ Surplus water and some aggregates recycled
- ✓ Low transport impacts
- ✓ Leftover concrete returned from construction sites
- ✓ Passive solar heated thermal mass makes completed buildings more energy-efficient
- ✓ Most wash water returned from construction sites
- ✓ Highly durable, low maintenance buildings and no rot
- ✓ High degree of noise control
- ✓ Inherent fire resistance
- ✓ Overall longer effective building life
- ✓ Demolished concrete can be recycled as hard fill or aggregate

© Firth Industries 2020. All rights reserved. Content in this document is protected under the Copyright Act 1994. No material may be reproduced in whole or in part without the written consent of the copyright holder.

0800 FIRTH 1 (347841)
FIRTH.CO.NZ

PRODUCT CERTIFICATE

Firth Ribraft® Floor System

CERTIFICATE NO: CM70056 Rev 3
Date of issue: 26 March 2021

KEY INFORMATION

1 CERTIFICATE HOLDER DETAILS

Fletcher Concrete and Infrastructure Ltd
T/A Firth Industries
810 Great South Road
Penrose, Auckland 1061

Info@firth.co.nz
Ph: 0800 800 576
www.firth.co.nz

2 PRODUCT CERTIFICATION BODY

Bureau Veritas Australia Pty Ltd
3/435 Williamstown Road
Port Melbourne VIC 3207
Australia

Ph: 1800 855 190
www.bureauveritas.com.au

Bureau Veritas Australia Pty Ltd

The complaints process for this certificate can be found here:
www.bureauveritas.com.au/your-feedback

3 SUMMARY OF DESCRIPTION OF BUILDING METHOD OR PRODUCT

The Firth RibRaft® Floor System comprises of polystyrene pods, steel reinforcing rods, plastic spacers and Firth RibRaft® concrete.

Continuation of description can be found in item 9. Supporting Information about Description of Building Product or Method.
Matters that should be taken into account in the use or application of the building method or product can be found in item 6. Conditions and Limitations of Use.

4 SUMMARY OF INTENDED USE OF BUILDING METHOD OR PRODUCT

The Firth RibRaft® Floor System is a method of concrete floor construction, suitable for all slab-on-ground concrete floors for domestic or residential buildings that fall within the scope of NZS 3604:2011 Timber framed buildings.

Continuation of intended use can be found in item 8. Supporting Information about Intended use of Building Product or Method.

5 BUILDING CODE PROVISIONS

The performance clauses of the New Zealand Building Code that are relevant to the intended use and with which the building method or product complies or contributes to (where used as part of a system).

B1 Structure: B1.3.1, B1.3.2, B1.3.3 (a, b, f, g, h, q, m), B1.3.4
B2 Durability: B2.3.1(a), B2.3.2(a)
E2 External Moisture: E2.3.3, E2.3.7
F2 Hazardous Building Materials: F2.3.1
H1 Energy Efficiency: H1.3.1 (contributes to), H1.3.2E (contributes to)

How the building method or product complies or contributes can be found in item 12. Basis for Certification. Any qualifications on the extent of that compliance can be found in item 6. Conditions and limitations of use.

This certificate is issued by an independent certification body accredited by JAS-ANZ, the product certification accreditation body appointed by the Chief Executive of the Ministry of Business, Innovation and Employment under the Building Act 2004.
The Ministry does not in any way warrant, guarantee, or represent that the building method or product that is the subject of this certificate conforms with the New Zealand Building Code, nor accept any liability arising out of the use of the building method or product.
The Ministry disclaims to the extent permitted by law, all liability (including negligence) for claims of losses, expenses, damages, and costs arising as a result of the use of the building method(s) or product(s) referred to in this certificate.

This certificate may only be reproduced in its entirety. It is advised to check that this certificate is currently valid and not withdrawn or suspended by referring to the Register of Product Certificates on the Building Performance website http://www.building.govt.nz.

PRODUCT CERTIFICATE

Firth Ribraft® Floor System

6 CONDITIONS AND LIMITATIONS OF USE

1. The Firth RibRaft® Floor System shall only be used in buildings which fall within the scope of NZS 3604:2011 – Timber-framed buildings, located:
   a) Where the Seismic Hazard Factor Z (defined in NZ 1170.5:2004) is less than or equal to 0.45 (refer to Figure 6 of the Firth RibRaft® Technical Manual January 2020)
   b) in any wind zones up to and including Extra High
   c) in areas with snow loads up to 2.0 kPa
   d) in all exposure zones (except microclimates)
   e) and where the ground Ultimate Bearing Capacity exceeds the value specified in Table 2 for the types of construction in Table 1 of the Firth RibRaft® Technical Manual January 2020.
2. The Firth RibRaft® Floor System shall be designed and installed in accordance with the Firth RibRaft® Technical Manual January 2020.

NOTE: Together, items 3, 4, 5 and 6 define scope of use.

7 HEALTH AND SAFETY INFORMATION

The compliance with any manufacturer's installation instructions, maintenance, OH & S statements, MSDS's and other Health and Safety declarations will provide the necessary Health and Safety Information pertaining to the product.

8 SIGNATURES

Sam Guindi
Product Certification Manager

For and on behalf of
Bureau Veritas Australia Pty Ltd

Dene Cook
Divisional Technical Manager

For and on behalf of
Firth Industries

This certificate is issued by an independent certification body accredited by JAS-ANZ, the product certification accreditation body appointed by the Chief Executive of the Ministry of Business, Innovation and Employment under the Building Act 2004.
The Ministry does not in any way warrant, guarantee, or represent that the building method or product that is the subject of this certificate conforms with the New Zealand Building Code, nor accept any liability arising out of the use of the building method or product.
The Ministry disclaims to the extent permitted by law, all liability (including negligence) for claims of losses, expenses, damages, and costs arising as a result of the use of the building method(s) or product(s) referred to in this certificate.

This certificate may only be reproduced in its entirety. It is advised to check that this certificate is currently valid and not withdrawn or suspended by referring to the Register of Product Certificates on the Building Performance website http://www.building.govt.nz.
CERTIFICATE V1.3

PRODUCT CERTIFICATE

Firth Ribraft® Floor System

SCHEDULE: INFORMATION THAT SUPPORTS KEY INFORMATION

9 SUPPORTING INFORMATION ABOUT DESCRIPTION

The system consists of the following components:

- RibRaft® Polystyrene Pod 1100mm x 1100mm x 220mm. 300mm thick pods are also available for deeper edge beams and internal ribs.
- Firth Pod and Reinforcement spacer (300mm and 100mm)
- Firth Reinforcement chair
- Reinforcement Grade 500E
- Mesh reinforcement
- Firth RibRaft® Concrete 20MPa or 25 MPa
- Sand Blinding
- DPM (250 micron polyethylene sheet)

10 SUPPORTING INFORMATION ABOUT INTENDED USE

Further details regarding the use of the product can be found in Firth RibRaft® Technical Manual, January 2020.

11 SUPPORTING INFORMATION ABOUT CONDITIONS AND LIMITATIONS OF USE

N/A

This certificate is issued by an independent certification body accredited by JAS-ANZ, the product certification accreditation body appointed by the Chief Executive of the Ministry of Business, Innovation and Employment under the Building Act 2004.
The Ministry does not in any way warrant, guarantee, or represent that the building method or product that is the subject of this certificate conforms with the New Zealand Building Code, nor accept any liability arising out of the use of the building method or product.
The Ministry disclaims to the extent permitted by law, all liability (including negligence) for claims of losses, expenses, damages, and costs arising as a result of the use of the building method(s) or product(s) referred to in this certificate.

This certificate may only be reproduced in its entirety. It is advised to check that this certificate is currently valid and not withdrawn or suspended by referring to the Register of Product Certificates on the Building Performance website http://www.building.govt.nz.

PRODUCT CERTIFICATE

Firth Ribraft® Floor System

12 BASIS FOR CERTIFICATION

B1 Structure - By analysis and comparison with Acceptable Solution B1/VM1
B2 Durability – By analysis and comparison with Acceptable Solution B2/AS1 and Verification Method B2/VM1
E2 External moisture – By analysis and comparison with Acceptable Solution E2/AS1
H1 Energy efficiency - By analysis and comparison with Acceptable Solution H1/AS1
F2 Hazardous building materials - By comparison with performance Clause F2.3.1

13 SUPPORTING DOCUMENTATION FOR CERTIFICATION

1. Acceptable Solutions and Verification Methods for New Zealand Building Code Clause B1 Structure 1st Edition (Amendment 19), 28 November 2019
2. Acceptable Solutions and Verification Methods For New Zealand Building Code Clause B2 Durability (Amendment 12), 28 November 2019
3. Acceptable Solutions and Verification Methods For New Zealand Building Code Clause E2 External moisture 3rd edition (Amendment 9), 27 June 2019
4. Structural assessment by Holmes Consulting Firth Ribraft Concrete Floor System, May 2012
5. OPUS Report "Compliance of Firth of Ribraft System with NZBC Clause B2 Durability", 24 May 2010
6. eCubed Building Workshop Report on R value of Ribraft Concrete Floor System, 17 September 2010
7. Firth RibRaft® Technical Manual, January 2020
8. NZS 3604:2011 Timber framed buildings
9. NZS 4214:2006 Methods of determining the total thermal resistance of parts of buildings

This certificate is issued by an independent certification body accredited by JAS-ANZ, the product certification accreditation body appointed by the Chief Executive of the Ministry of Business, Innovation and Employment under the Building Act 2004.
The Ministry does not in any way warrant, guarantee, or represent that the building method or product that is the subject of this certificate conforms with the New Zealand Building Code, nor accept any liability arising out of the use of the building method or product.
The Ministry disclaims to the extent permitted by law, all liability (including negligence) for claims of losses, expenses, damages, and costs arising as a result of the use of the building method(s) or product(s) referred to in this certificate.

This certificate may only be reproduced in its entirety. It is advised to check that this certificate is currently valid and not withdrawn or suspended by referring to the Register of Product Certificates on the Building Performance website http://www.building.govt.nz.

PRODUCT CERTIFICATE

Firth Ribraft® Floor System

14 CONDITIONS RELATING TO NOTIFICATION

(a) the certificate holder notifies the product certification body (Bureau Veritas) in writing of any intended change to any of the following particulars:
(i) the name, address, or contact details of the certificate holder:
(ii) any address of a location where a certified product is produced or manufactured:

(b) the certificate holder notifies the product certification body (Bureau Veritas) in writing of any intended change, modification, or alteration to any of the following:
(i) the certified building method or product:
(ii) the method of its production or manufacture:
(iii) the product quality plan prepared in respect of the certified building method or product:
(iv) the application or installation instructions for the certified building method or product:
(v) any documentation relating to the use and maintenance of the certified building method or product:

(c) if the certificate holder has any reason to suspect that the certified building method or product does not comply with the Building Code, the certificate holder notifies the product certification body (Bureau Veritas) in writing of the reason for that suspicion:

(d) if the certificate holder or the product certification body (Bureau Veritas) finds that a certified building method or product that has been released on the market does not comply with the Building Code, the certificate holder discloses that fact in disclosure statements published in a form that is acceptable to the product certification body and to the chief executive:

(e) if the certificate is suspended or revoked, the certificate holder—
(i) notifies all customers to whom the building method or product is regularly supplied; and
(ii) immediately ceases using the certificate, the mark of conformity, and any reference to the number of the certificate.

This certificate is issued by an independent certification body accredited by JAS-ANZ, the product certification accreditation body appointed by the Chief Executive of the Ministry of Business, Innovation and Employment under the Building Act 2004.
The Ministry does not in any way warrant, guarantee, or represent that the building method or product that is the subject of this certificate conforms with the New Zealand Building Code, nor accept any liability arising out of the use of the building method or product.
The Ministry disclaims to the extent permitted by law, all liability (including negligence) for claims of losses, expenses, damages, and costs arising as a result of the use of the building method(s) or product(s) referred to in this certificate.

This certificate may only be reproduced in its entirety. It is advised to check that this certificate is currently valid and not withdrawn or suspended by referring to the Register of Product Certificates on the Building Performance website http://www.building.govt.nz.

4161P Paul Industries Underlays, Foil & DPC

Paul Industries
+297 07 5788209
info@paulindustries.co.nz
www.paulindustries.co.nz

SUPPORTING DOCUMENTS

BRANZ Appraisal 715 - Fast Wrap FlameSpec SS Roof Underlay

Ref 10555. Uploaded 12 Aug 2020

Purpose: Performance

BRANZ Appraisal 853 - Fast Wrap ULTRA-BOND Sill Tape

Ref 10556. Uploaded 12 Aug 2020

Purpose: Performance

BRANZ Appraised
Appraisal No. 715 [2017]

FAST WRAP FLAMESPEC SS ROOF UNDERLAY

Appraisal No. 715 (2017)

This Appraisal replaces BRANZ Appraisal No. 715 (2011)

Amended 29 June 2018.

FlameSpec SS

SYNTHETIC SELF SUPPORT ROOFING UNDERLAY

BRANZ Appraisals

Technical Assessments of products for building and construction.

Judea Holdings Ltd,
T/A Paul Industries
PO Box 308
Tauranga 3140

Free phone: 0800 330 320

Tel: 07 578 8209

Fax: 07 928 5244

Web: www.paulindustries.co.nz

BRANZ
1222 Moonshine Rd,
RD1, Porirua 5381
Private Bag 50 908
Porirua 5240,
New Zealand
Tel: 04 237 1170
branz.co.nz

Product

1.1 Fast Wrap FlameSpec SS Roof Underlay is a synthetic building underlay for use under roof claddings. The product consists of a micro-porous water resistant film laminated to two layers of non woven spun-bonded polyolefin.

Scope

2.1 Fast Wrap FlameSpec SS Roof Underlay has been appraised for use as a self-supporting roof underlay on buildings within the following scope:

- the scope limitations of NZBC Acceptable Solution E2/AS1, Paragraph 1.1 with regards to building height and floor plan area; and,
- with masonry tile roof cladding; and,
- with metal tile roof cladding; and,
- with profiled metal roof cladding; and,
- situated in NZS 3604 Wind Zones up to, and including Extra High.

Building Regulations

New Zealand Building Code (NZBC)

3.1 **In the opinion of BRANZ, Fast Wrap FlameSpec SS Roof Underlay, if used, designed, installed and maintained in accordance with the statements and conditions of this Appraisal, will meet, or contribute to meeting the following provisions of the NZBC:**

Clause B2 DURABILITY: Performance B2.3.1 (a), not less than 50 years, B2.3.1 (b), 15 years and B2.3.2. Fast Wrap FlameSpec SS Roof Underlay meets these requirements. See Paragraphs 9.1 and 9.2.

Clause C3 FIRE AFFECTING AREAS BEYOND THE FIRE SOURCE: Performance C3.4 (c). Fast Wrap FlameSpec SS Roof Underlay meets this requirement. See Paragraph 10.1.

Clause E2 EXTERNAL MOISTURE: Performance E2.3.2. When used as part of the roof cladding system, Fast Wrap FlameSpec SS Roof Underlay will contribute to meeting this requirement. See Paragraphs 12.1 and 12.2.

Clause F2 HAZARDOUS BUILDING MATERIALS: Performance F2.3.1. Fast Wrap FlameSpec SS Roof Underlay meets this requirement and will not present a health hazard to people.

Readers are advised to check the validity of this Appraisal by referring to the Valid Appraisals listing on the BRANZ website, or by contacting BRANZ.

Technical Specification

4.1 Fast Wrap FlameSpec SS Roof Underlay is a synthetic building underlay for use under roof claddings. The product consists of a micro-porous water resistant film laminated to two layers of non woven spun-bonded polyolefin. Fast Wrap FlameSpec SS Roof Underlay is coloured grey on the top face and white on the bottom face.

4.2 Fast Wrap FlameSpec SS Roof Underlay is supplied in rolls 1.250 m wide x 40 m long. The product is printed with the Fast Wrap logo repeated along the length of the roll. The rolls are wrapped in clear polythene film.

Accessories

4.3 Accessories used with Fast Wrap FlameSpec SS Roof Underlay which are supplied by the installer are:

- **Fixings** - stainless steel staples, clouts, screws or proprietary underlays fixings, or other temporary fixings to attach the roof underlay to the framing.

Handling and Storage

5.1 Handling and storage of the product, whether on or off site, is under the control of the installer. The rolls must be protected from damage and weather. They must be stored on end, under cover, in clean, dry conditions and must not be crushed.

Technical Literature

6.1 Refer to the Appraisals listing on the BRANZ website for details of the current Technical Literature for Fast Wrap FlameSpec SS Roof Underlay. The Technical Literature must be read in conjunction with this Appraisal. All aspects of design, use, installation and maintenance contained in the Technical Literature and within the scope of this Appraisal must be followed.

Design Information

General

7.1 Fast Wrap Flamespec SS Roof Underlay is suitable for use at roof pitches 3° and above. When used at pitches less than 10°, Fast Wrap Flamespec SS Roof Underlay can be installed horizontally or vertically when fully supported by a corrosion resistant roof underlay support. At pitches 10° and greater, Fast Wrap Flamespec SS Roof Underlay can be installed vertically or horizontally, spanning no greater than 1200 mm between supports.

7.2 Fast Wrap FlameSpec SS Roof Underlay is intended for use as an alternative to conventional kraft paper roof underlays, which are fixed over timber or steel framed roofs in order to limit the entry of wind into the roof cavity, and to assist in the moisture management of the roof cladding system.

7.3 The material also provides a degree of temporary weather protection during early construction. However, the product will not make the roof weathertight and some wetting of the underlying structure is always possible before the roof cladding is installed. Hence, the entire building must be closed-in and made weatherproof before moisture sensitive materials such as ceiling linings and insulation materials are installed.

7.4 Fast Wrap FlameSpec SS Roof Underlay must not be exposed to the weather or ultra violet light for a total of more than 7 days before being covered by the roof cladding.

7.5 Fast Wrap FlameSpec SS Roof Underlay is suitable for use under roof claddings on buildings as a roof underlay as called up in NZBC Acceptable Solution E2/AS1, Table 23. Refer to Table 1 for the material properties of the Fast Wrap FlameSpec SS Roof Underlay.

Readers are advised to check the validity of this Appraisal by referring to the Valid Appraisals listing on the BRANZ website, or by contacting BRANZ.

Table 1: NZBC E2/AS1, Table 23 Requirements

NZBC E2/AS1, Table 23 Roof Underlays Properties	Property Performance Requirement	Results
Absorbency	≥ 150 g/m^2	Pass
Vapour Resistance	≤ 7 MN s/g	Pass
Water Resistance	≥ 100 mm	Pass
pH of Extract	≥ 5.5 and ≤ 8	Pass
Shrinkage	≤ 0.5%	Pass
Mechanical	Edge tear and tensile strength	**Edge tear (Average):** Machine direction = 229 N Cross direction = 145 N **Tensile strength (Average):** Machine direction = 4.47 kN/m Cross direction = 2.80 kN/m

Structure

8.1 Fast Wrap FlameSpec SS Roof Underlay is suitable for use in all Wind Zones of NZS 3604 up to, and including, Extra High.

Durability

9.1 Fast Wrap FlameSpec SS Roof Underlay meets code compliance with NZBC Clause B2.3.1 (a), not less than 50 years for roof underlays used where the roof cladding durability requirement or expected serviceable life is not less than 50 years, e.g. behind masonry roof tile cladding, and code compliance with NZBC Clause B2.3.1 (b), 15 years for roof underlays used where the roof cladding durability requirement is 15 years.

Serviceable Life

9.2 Provided it is not exposed to the weather or ultra-violet light for a total of more than 7 days, and provided the roof cladding is maintained in accordance with the cladding manufacturer's instructions and the roof cladding remains weather resistant, Fast Wrap FlameSpec SS Roof Underlay is expected to have a serviceable life equal to that of the roof cladding.

Control of Internal Fire and Smoke Spread

10.1 Fast Wrap FlameSpec SS Roof Underlay has an AS 1530 Part 2 flammability index of not greater than 5 and therefore meets the requirements of NZBC Acceptable Solutions C/AS2 to C/AS6, Paragraph 4.17.8 b), for the surface finish requirements of suspended flexible fabric used as an underlay to exterior cladding that is exposed to view in occupied spaces. It may therefore be used with no restrictions in all buildings.

Prevention of Fire Occurring

11.1 Separation or protection must be provided to Fast Wrap FlameSpec SS Roof Underlay from heat sources such as fire places, heating appliances, flues and chimneys. Part 7 of NZBC Acceptable Solutions C/AS1 – C/AS6 and NZBC Verification Method C/VM1 provide methods for separation and protection of combustible materials from heat sources.

External Moisture

12.1 Fast Wrap FlameSpec SS Roof Underlay must only be used under roof claddings that meet the requirements of the NZBC, such as those covered by NZBC Acceptable Solution E2/AS1, or roof claddings covered by a valid BRANZ Appraisal.

12.2 Fast Wrap FlameSpec SS Roof Underlay, when installed in accordance with the Technical Literature and this Appraisal, will assist in the total cladding system's compliance with NZBC Clause E2.

Readers are advised to check the validity of this Appraisal by referring to the Valid Appraisals listing on the BRANZ website, or by contacting BRANZ.

Installation Information

Installation Skill Level Requirements

13.1 Installation must always be carried out in accordance with the Fast Wrap FlameSpec SS Roof Underlay Technical Literature and this Appraisal by, or under the supervision of, a Licensed Building Practitioner (LBP) with the relevant Licence Class.

Underlay Installation

14.1 Fast Wrap FlameSpec SS Roof Underlay must be fixed at maximum 300 mm centres to all framing members with large-head clouts 20 mm long, 6-8 mm stainless steel staples, self drilling screws or proprietary underlay fixings. The membrane must be pulled taut over the framing before fixing.

14.2 Fast Wrap FlameSpec SS Roof Underlay may be installed horizontally or vertically at roof pitches 3° and above (refer to Paragraph 7.1 for further guidance). It must extend from the ridge and overhang the fascia board by 20-25 mm. Vertical laps must be no less than 150 mm wide. Horizontal laps must also be no less than 150 mm, with the direction of the lap ensuring that water is shed to the outer face of the underlay. End laps must be made over framing and be no less than 150 mm wide.

14.3 When fixing the product in windy conditions, care must be taken due to the large sail area created.

14.4 Any damaged areas of Fast Wrap FlameSpec SS Roof Underlay, such as tears, holes or gaps around service penetrations, must be repaired. Damaged areas can be repaired by covering with new material lapping the damaged area by at least 150 mm and taping, or by taping small tears.

Inspections

14.5 The Technical Literature must be referred to during the inspection of Fast Wrap FlameSpec SS Roof Underlay installations.

Basis of Appraisal

The following is a summary of the technical investigations carried out:

Tests

15.1 The following tests have been carried out on Fast Wrap FlameSpec SS Roof Underlay in accordance with NZBC Acceptable Solution E2/AS1, Table 23: tensile strength, edge-tear resistance and resistance to water vapour transmission in accordance with AS/NZS 4200.1, shrinkage in accordance with AS/NZS 4201.3, resistance to water penetration in accordance with AS/NZS 4201.4, surface water absorbency in accordance with AS/NZS 4201.6 and pH of extract in accordance with AS/NZS 1301.421s. A range of these tests were completed before and after Fast Wrap FlameSpec SS Roof Underlay was exposed to ultra-violet light.

15.2 The Flammability Index of Fast Wrap FlameSpec SS Roof Underlay has been evaluated in accordance with AS 1530.2.

Other Investigations

16.1 A durability opinion has been given by BRANZ technical experts.

16.2 An evaluation of the expected performance of Fast Wrap FlameSpec SS Roof Underlay in direct contact with metal roof cladding has been completed by BRANZ.

16.3 The practicability of installation of Fast Wrap FlameSpec SS Roof Underlay has been assessed by BRANZ and found to be satisfactory.

16.4 The Technical Literature, including installation instructions, has been examined by BRANZ and found to be satisfactory.

Readers are advised to check the validity of this Appraisal by referring to the Valid Appraisals listing on the BRANZ website, or by contacting BRANZ.

Quality

17.1 The manufacture of Fast Wrap has not been examined by BRANZ, but details of the methods adopted for quality control and the quality of the materials used, have been obtained and found to be satisfactory.

17.2 The quality of supply to the market is the responsibility of Paul Industries.

17.3 Building designers are responsible for the design of the building, and for the incorporation of the roof underlay into their design in accordance with the instructions of Paul Industries.

17.4 Quality of installation is the responsibility of the installer in accordance with the instructions of Paul Industries.

Sources of Information

- AS 1530.2: 1993 Test for Flammability of Materials.
- AS/NZS 1301.421s: 1998 Determination of the pH value of aqueous extracts of paper, board and pulp - cold extraction method.
- AS/NZS 4200.1: 1994 Pliable building membranes and Underlays - materials.
- AS/NZS 4201.3: 1994 Pliable building membranes and Underlays - Methods of test – Shrinkage.
- AS/NZS 4201.4: 1994 Pliable building membranes and Underlays - Methods of test – Resistance to water penetration.
- AS/NZS 4201.6: 1994 Pliable building membranes and Underlays - Methods of test – Surface water absorbency.
- AS/NZS 4534:2006 Zinc and zinc/aluminium-alloy coatings on steel wire.
- NZS 3604: 2011 Timber-framed Buildings.
- Acceptable Solutions and Verification Methods for New Zealand Building Code External Moisture Clause E2, Ministry of Business, Innovation and Employment, Third Edition July 2005 (Amendment 7, 01 January 2017).
- Ministry of Business, Innovation and Employment Record of amendments - Acceptable Solutions, Verification Methods and handbooks.
- The Building Regulations 1992.

Amendments

Amendment No. 1, dated 29 June 2018.

This Appraisal has been amended to update the requirements for support at roof pitches less than 10°.

Readers are advised to check the validity of this Appraisal by referring to the Valid Appraisals listing on the BRANZ website, or by contacting BRANZ.

In the opinion of BRANZ, Fast Wrap FlameSpec SS Roof Underlay is fit for purpose and will comply with the Building Code to the extent specified in this Appraisal provided it is used, designed, installed and maintained as set out in this Appraisal.

The Appraisal is issued only to Judea Holdings Ltd, T/A Paul Industries, and is valid until further notice, subject to the Conditions of Appraisal.

Conditions of Appraisal

1. This Appraisal:
   a) relates only to the product as described herein;
   b) must be read, considered and used in full together with the Technical Literature;
   c) does not address any Legislation, Regulations, Codes or Standards, not specifically named herein;
   d) is copyright of BRANZ.
2. Judea Holdings Ltd, T/A Paul Industries:
   a) continues to have the product reviewed by BRANZ;
   b) shall notify BRANZ of any changes in product specification or quality assurance measures prior to the product being marketed;
   c) abides by the BRANZ Appraisals Services Terms and Conditions.
   d) Warrants that the product and the manufacturing process for the product are maintained at or above the standards, levels and quality assessed and found satisfactory by BRANZ pursuant to BRANZ's Appraisal of the product.
3. BRANZ makes no representation or warranty as to:
   a) the nature of individual examples of, batches of, or individual installations of the product, including methods and workmanship;
   b) the presence or absence of any patent or similar rights subsisting in the product or any other product;
   c) any guarantee or warranty offered by Judea Holdings Ltd, T/A Paul Industries.
4. Any reference in this Appraisal to any other publication shall be read as a reference to the version of the publication specified in this Appraisal.
5. BRANZ provides no certification, guarantee, indemnity or warranty, to Judea Holdings Ltd, T/A Paul Industries or any third party.

For BRANZ



Chelydra Percy
Chief Executive

Date of Issue:
24 August 2017

Readers are advised to check the validity of this Appraisal by referring to the Valid Appraisals listing on the BRANZ website, or by contacting BRANZ.

BRANZ Appraised
Appraisal No. 853 [2019]

FASTWRAP ULTRA-BOND SILL TAPE



Appraisal No. 853 (2019)

This Appraisal replaces BRANZ Appraisal No. 853 (2014)

BRANZ Appraisals

Technical Assessments of products for building and construction.

Paul Industries
PO Box 308
Tauranga 3140

Free phone: 0800 330 320

Tel: 07 578 8209

Fax: 07 928 5244

Web: www.paulindustries.co.nz

BRANZ
1222 Moonshine Rd,
RD1, Porirua 5381
Private Bag 50 908
Porirua 5240,
New Zealand
Tel: 04 237 1170
branz.co.nz

Product

1.1 Fastwrap ULTRA-BOND Sill Tape is a flexible flashing tape system for use around framed joinery openings as a secondary weather resistant barrier.

1.2 The system is installed into and around the framed joinery opening over the wall underlay and exposed frame to cover both the face and edge of the opening framing. Fastwrap ULTRA-BOND Sill Tape is also used at joinery heads to seal flashing upstands to the wall underlay.

Scope

2.1 Fastwrap ULTRA-BOND Sill Tape has been appraised as a flexible flashing system for use around window and door joinery openings for buildings within the following scope:

- constructed with timber framing in accordance with the scope limitations of NZBC Acceptable Solution E2/AS1, Paragraph 1.1; or,
- constructed with steel framing subject to specific engineering design with building height and floor plan area scope limitations in accordance with NZBC Acceptable Solution E2/AS1; and,
- with a risk score of 0-20, calculated in accordance with NZBC Acceptable Solution E2/AS1, Table 2; and,
- with wall cladding systems complying with NZBC Acceptable Solution E2/AS1 or a valid BRANZ Appraisal that specifies a flexible flashing system; and,
- with flexible wall underlays compatible with the flashing tape and complying with the NZBC; and,
- situated in NZS 3604 Wind Zones up to, and including, Extra High (refer to Paragraph 7.4).

Building Regulations

New Zealand Building Code (NZBC)

3.1 **In the opinion of BRANZ, Fastwrap ULTRA-BOND Sill Tape, if designed, used, installed and maintained in accordance with the statements and conditions of this Appraisal, will meet or contribute to meeting the following provisions of the NZBC:**

Clause B2 DURABILITY: Performance B2.3.1 (b), 15 years and B2.3.2. Fastwrap ULTRA-BOND Sill Tape meets these requirements. See Paragraphs 8.1 and 8.2.

Clause E2 EXTERNAL MOISTURE: Performance E2.3.2. Fastwrap ULTRA-BOND Sill Tape contributes to meeting this requirement. See Paragraphs 7.1 - 7.4 and 11.1.

Clause F2 HAZARDOUS BUILDING MATERIALS: Performance F2.3.1. Fastwrap ULTRA-BOND Sill Tape meets this requirement and will not present a health hazard to people.

Readers are advised to check the validity of this Appraisal by referring to the Valid Appraisals listing on the BRANZ website, or by contacting BRANZ.

Technical Specification

4.1 System components and accessories supplied by Paul Industries are:

- **Fastwrap ULTRA-BOND Sill Tape** is a white spun bonded polyethylene film faced, butyl rubber self-adhesive tape with a release backing paper. The tape is supplied in rolls 200, 150, 75 and 50 mm wide x 25 m long. The rolls are wrapped in clear polythene film.

4.2 Accessories used with the system which are supplied by the building contractor are:

- **Flexible wall underlay** – building paper complying with NZBC Acceptable Solution E2/AS1, Table 23, or breather-type membranes covered by a valid BRANZ Appraisal for use as wall underlays.

Handling and Storage

5.1 Handling and storage of all materials supplied by Paul Industries, whether on or off site, is under the control of the installer. Fastwrap ULTRA-BOND Sill Tape must be protected from damage and weather. Rolls must be stored under cover, in clean, dry conditions away from direct exposure to sunlight.

Technical Literature

6.1 Refer to the Appraisals listing on the BRANZ website for details of the current Technical Literature for Fastwrap ULTRA-BOND Sill Tape. The Technical Literature must be read in conjunction with this Appraisal. All aspects of design, use, installation and maintenance contained in the Technical Literature and within the scope of this Appraisal must be followed.

Design Information

General

7.1 Fastwrap ULTRA-BOND Sill Tape has been assessed against the requirements of AC148: 2001 which is an alternative solution to the version of AC148 referenced by NZBC Acceptable Solution E2/AS1, Paragraph 9.1.5 (b). The installation method for Fastwrap ULTRA-BOND Sill Tape is an alternative solution to the installation method shown within NZBC Acceptable Solution E2/AS1, Figures 72A and 72B.

7.2 Fastwrap ULTRA-BOND Sill Tape must not be exposed to the weather or ultra-violet light for a total of more than 30 days before being covered by the cladding system.

7.3 The use of flexible flashing systems around window and door joinery openings is critical to assist the overall weathertightness performance of window and door joinery installations.

7.4 Fastwrap ULTRA-BOND Sill Tape is suitable for use over flexible wall underlays compatible with the flashing tape in NZS 3604 Wind Zones up to and including Extra High. In the Extra High Wind Zone, the flexible underlay must be installed over a rigid underlay complying with NZBC Acceptable Solution E2/AS1, Table 23.

7.5 Fastwrap ULTRA-BOND Sill Tape is designed to prevent air leakage and water penetration around window and door openings at framing junctions (e.g. at the sill trimmer and opening stud junction), and to keep any water that gets past the cladding, or through the joinery, from direct contact with the framing timber.

7.6 Fastwrap ULTRA-BOND Sill Tape is not designed to overcome poor detailing and workmanship of the window or door joinery installation. The system must not be considered in isolation, but be considered as part of the wall cladding system. Fastwrap ULTRA-BOND Sill Tape is designed to be used in conjunction with air seals and joinery flashing systems, not as a substitute.

7.7 When Fastwrap ULTRA-BOND Sill Tape is used in conjunction with LOSP (light organic solvent preservative) treated timber, the solvent from the timber treatment must be allowed to evaporate (generally at least one week) prior to the installation of the system.

Readers are advised to check the validity of this Appraisal by referring to the Valid Appraisals listing on the BRANZ website, or by contacting BRANZ.

Durability

8.1 Assessment of durability to meet the NZBC is based on difficulty of access and replacement, and the ability to detect failure of Fastwrap ULTRA-BOND Sill Tape both during normal use and maintenance of the building.

Serviceable Life

8.2 Provided it is not exposed to the weather or ultra-violet light for a total of more than 30 days, and provided the exterior cladding is maintained in accordance with the cladding manufacturer's instructions and the cladding remains weather resistant, Fastwrap ULTRA-BOND Sill Tape is expected to have a serviceable life equal to that of the cladding.

Maintenance

9.1 No maintenance is required for Fastwrap ULTRA-BOND Sill Tape. Regular checks, at least annually, must be made of the junctions between the joinery and wall cladding to ensure that they are maintained weathertight and that the primary means of weather resistance for the junction e.g. flashing, sealant, etc continues to perform its function, to ensure that water will not penetrate the cladding.

Prevention of Fire Occurring

10.1 Separation or protection must be provided to the Fastwrap ULTRA-BOND Sill Tape from heat sources such as fireplaces, heating appliances and chimneys. Part 7 of NZBC Acceptable Solution C/AS1 and C/AS2, and NZBC Verification Method C/VM1 provide methods for separation and protection of combustible materials from heat sources.

External Moisture

11.1 Where a cladding manufacturer specifies the use of generic flashing tapes around window and door joinery openings at framing junctions as part of their system, or they specify the use of flexible flashing tapes that comply with NZBC E2/AS1, Paragraph 9.1.5 (b), Fastwrap ULTRA-BOND Sill Tape may be used.

Installation Information

Installation Skill Level Requirements

12.1 All design and building work must be carried out in accordance with the Fastwrap ULTRA-BOND Sill Tape Technical Literature and this Appraisal by competent and experienced tradespersons conversant with sill tape installations. Where the work involves Restricted Building Work (RBW) this must be completed by, or under the supervision of, a Licensed Building Practitioner (LBP) with the relevant License class.

General

13.1 The selected wall underlay must be installed in accordance with the manufacturer's instructions, and must completely cover the joinery opening. The underlay is then cut on a 45° angle away from each corner of the opening so the flaps can be folded into the opening and secured to the interior face of the timber framing.

13.2 Before the Fastwrap ULTRA-BOND Sill Tape is applied, the substrate surfaces must be clean, dry and free from any surface contaminants such as dust and grease that may cause loss of adhesion.

13.3 A 50 mm wide x 120 mm long sealing tape 'butterfly' must be installed at 45° across the corner of the sill/jamb junctions overlapping the corner by 3 mm to create a seal at the corner junction.

13.4 A length of Fastwrap ULTRA-BOND Sill Tape must be cut to the length of the sill plus 400 mm. The tape is installed flush with the interior face of the opening and is applied along the entire length of the sill and 200 mm up each jamb. The overhanging tape is cut at the corner of the opening to allow the tape to be folded onto the face of the building underlay. A spatula or similar must be used to ensure that adequate adhesion of the tape is achieved and that the tape is installed tight into the sill/jamb junction.

Readers are advised to check the validity of this Appraisal by referring to the Valid Appraisals listing on the BRANZ website, or by contacting BRANZ.

13.5 A 400 mm length of Fastwrap ULTRA-BOND Sill Tape must be installed 200 mm down the jamb and 200 mm along the lintel at each of the top corners of the window or door joinery opening. A 50 mm wide x 120 mm long sealing tape 'butterfly' must be installed at 45° across the corner of the head/jamb junctions overlapping the corner by 3 mm.

13.6 Fastwrap ULTRA-BOND Sill Tape must not be stretched. To avoid wastage, the tape can be lapped 100 mm minimum onto itself without reducing the performance of the Fastwrap ULTRA-BOND Sill Tape System.

13.7 If the Fastwrap ULTRA-BOND Sill Tape is exposed to the weather or UV light for more than 30 days, then it must be replaced.

Installation Temperature

13.8 Fastwrap ULTRA-BOND Sill Tape must not be installed at temperatures less than 5°C. *(Note: Paul Industries approve the installation of Fastwrap ULTRA-BOND Sill Tape within the temperature range of -17°C to +45°C. This has not been addressed by the BRANZ and is therefore outside the scope of the Appraisal.)*

Inspections

13.9 The Technical Literature must be referred to during the inspection of Fastwrap ULTRA-BOND Sill Tape installations.

Basis of Appraisal

The following is a summary of the technical investigations carried out:

Tests

14.1 Testing of Fastwrap ULTRA-BOND Sill Tape has been completed by BRANZ to the requirements of ICC Evaluation Service Acceptance Criteria for Flashing Materials AC148:2001. The adhesion of Fastwrap ULTRA-BOND Sill Tape to black bituminous Kraft building paper complying with the requirements of NZBC Acceptable Solution E2/AS1, Table 23 and selected other synthetic wall underlays has been tested and found to be satisfactory.

Other Investigations

15.1 An assessment was made of the durability of Fastwrap ULTRA-BOND Sill Tape by BRANZ technical experts.

15.2 Site inspections were carried out by BRANZ to examine the practicability of installation.

15.3 The Technical Literature has been reviewed by BRANZ and found to be satisfactory.

Quality

16.1 The manufacture of Fastwrap ULTRA-BOND Sill Tape has not been examined by BRANZ, but details of the quality and composition of the materials used were obtained and found to be satisfactory. BRANZ undertakes an ongoing review of product quality on an inwards goods basis.

16.2 The quality of supply to the market is the responsibility of Paul Industries.

16.3 Designers are responsible for the building design, and building contractors are responsible for the quality of installation of framing systems and wall underlays in accordance with the instructions of the designer.

16.4 The quality of installation, handling and storage on site is the responsibility of the installer in accordance with the instructions of Paul Industries.

Readers are advised to check the validity of this Appraisal by referring to the Valid Appraisals listing on the BRANZ website, or by contacting BRANZ.

Sources of Information

- ICC Evaluation Service, Inc, AC148 Acceptable Criteria for Flexible Flashing Materials, July 2001.
- NZS 3604: 2011 Timber-framed buildings.
- Ministry of Business, Innovation and Employment Record of amendments - Acceptable Solutions, Verification Methods and handbooks.
- The Building Regulations 1992.

Readers are advised to check the validity of this Appraisal by referring to the Valid Appraisals listing on the BRANZ website, or by contacting BRANZ.

BRANZ

In the opinion of BRANZ, Fastwrap ULTRA-BOND Sill Tape is fit for purpose and will comply with the Building Code to the extent specified in this Appraisal provided it is used, designed, installed and maintained as set out in this Appraisal.

The Appraisal is issued only to Paul Industries, and is valid until further notice, subject to the Conditions of Appraisal.

Conditions of Appraisal

1. This Appraisal:
   a) relates only to the product as described herein;
   b) must be read, considered and used in full together with the Technical Literature;
   c) does not address any Legislation, Regulations, Codes or Standards, not specifically named herein;
   d) is copyright of BRANZ.
2. Paul Industries:
   a) continues to have the product reviewed by BRANZ;
   b) shall notify BRANZ of any changes in product specification or quality assurance measures prior to the product being marketed;
   c) abides by the BRANZ Appraisals Services Terms and Conditions;
   d) warrants that the product and the manufacturing process for the product are maintained at or above the standards, levels and quality assessed and found satisfactory by BRANZ pursuant to BRANZ's Appraisal of the product.
3. BRANZ makes no representation or warranty as to:
   a) the nature of individual examples of, batches of, or individual installations of the product, including methods and workmanship;
   b) the presence or absence of any patent or similar rights subsisting in the product or any other product;
   c) any guarantee or warranty offered by Paul Industries.
4. Any reference in this Appraisal to any other publication shall be read as a reference to the version of the publication specified in this Appraisal.
5. BRANZ provides no certification, guarantee, indemnity or warranty, to Paul Industries or any third party.

For BRANZ

Chelydra Percy
Chief Executive

Date of Issue:
18 November 2019

Readers are advised to check the validity of this Appraisal by referring to the Valid Appraisals listing on the BRANZ website, or by contacting BRANZ.

4161T Thermakraft Underlays, Foils, DPC, DPM, & Tapes

Thermakraft Ltd
+64 09 2733727
info@thermakraft.co.nz
www.thermakraft.co.nz

SUPPORTING DOCUMENTS

BRANZ Appraisal 329 - Supercourse 500™ Damp-Proof Course and Concealed Flashing

Ref 10565. Uploaded 12 Aug 2020

Purpose: Performance

BRANZ Appraised

Appraisal No. 329 [2016]

SUPERCOURSE 500 DAMP-PROOF COURSE AND CONCEALED FLASHING

Appraisal No. 329 (2016)

This Appraisal replaces BRANZ Appraisal No. 329 (2005)

Amended 23 February 2017



BRANZ Appraisals

Technical Assessments of products for building and construction.

Thermakraft Limited
PO Box 58 112
Greenmount
Auckland
Tel: 09 273 3727
Fax: 09 273 3726
Free phone: 0800 806 595
www.thermakraft.co.nz

BRANZ
1222 Moonshine Rd,
RD1, Porirua 5381
Private Bag 50 908
Porirua 5240,
New Zealand
Tel: 04 237 1170
branz.co.nz

Product

1.1 Supercourse 500 is a single layer black polyethylene, embossed on both faces to produce a small diamond pattern. It is for use as a general damp-proof course (DPC), and also as a concealed flashing for masonry veneer cladding.

Scope

2.1 Supercourse 500 has been appraised for use as a damp-proof course for separating timber, wood-based products and metal from concrete, masonry or clay brick in accordance with NZS 3604.

2.2 Supercourse 500 has also been appraised for use as a damp-proof course and flashing in masonry veneer walls in accordance with NZBC Acceptable Solution E2/AS1.

Building Regulations

New Zealand Building Code (NZBC)

3.1 **In the opinion of BRANZ, Supercourse 500 Damp-Proof Course and Concealed Flashing, if used, designed, installed and maintained in accordance with the statements and conditions of this Appraisal, will meet, or contribute to meeting the following provisions of the NZBC:**

Clause B2 DURABILITY: Performance B2.3.1 (a), not less than 50 years and B2.3.2. Supercourse 500 meets these requirements. See Paragraph 8.1.

Clause E2 EXTERNAL MOISTURE: Performance E2.3.2 and E2.3.3. When used as a flashing as part of a masonry veneer cladding system, Supercourse 500 will contribute to meeting the requirements of E2.3.2. When used as a DPC, Supercourse 500 will meet the requirements of E2.3.3. See Paragraphs 11.1 and 11.2.

Clause F2 HAZARDOUS BUILDING MATERIALS: Performance F2.3.1. Supercourse 500 meets this requirement and will not present a health hazard to people.

3.2 This is an Appraisal of an **Alternative Solution** DPC in terms of the New Zealand Building Code compliance. This is also an Appraisal of an **Acceptable Solution** flashing when used behind masonry veneer in accordance with NZBC Acceptable Solution E2/AS1.

Readers are advised to check the validity of this Appraisal by referring to the Valid Appraisals listing on the BRANZ website, or by contacting BRANZ.

Technical Specification

4.1 Supercourse 500 is 0.5 mm thick, extruded polyethylene film. It consists of a single layer of black polyethylene, embossed on both faces to produce a small diamond pattern. The total thickness of the product after embossing is 0.75 mm. Supercourse 500 is supplied in rolls 30 m long and is available in widths of 50, 75, 90, 100, 150, 200, 250, 300 and 1000 mm. Other widths are available upon request.

4.2 Each roll is labelled with the product name, dimensions, standards reference, and manufacturer's information.

Handling and Storage

5.1 Handling and storage of the product, whether on or off site, is under the control of the installer. The rolls must be protected from damage and weather and must be stored under cover, in clean, dry conditions.

Technical Literature

6.1 Refer to the Appraisals listings on the BRANZ website for details of the current Technical Literature for Supercourse 500. The Technical Literature must be read in conjunction with this Appraisal. All aspects of design, use, installation and maintenance contained in the Technical Literature and within the scope of this Certificate must be followed.

Design Information

General

7.1 Supercourse 500 exceeds the vapour resistance requirements of NZBC Acceptable Solution E2/AS1, Table 23 for DPC's and is a suitable moisture impermeable alternative to bituminous DPC's.

7.2 Supercourse 500 is intended for use as a DPC separating timber, wood-based products and metal from concrete or masonry elements, or where required, timber jack studs or bearers from concrete or timber piles, e.g. where required by NZS 3604, Paragraph 2.3.3 and Figure 6.3. When used as a DPC, the roll width selected must enable the Supercourse 500 to extend at least 6 mm beyond each face of the timber in accordance with the requirements of NZS 3604, Paragraph 2.3.3 (b).

7.3 Supercourse 500 is also intended for use as a flashing material with masonry veneer in accordance with NZBC Acceptable Solution E2/AS1, Paragraph 9.2.4 and also as a DPC in accordance with NZBC Acceptable Solution E2/AS1, Paragraph 9.2.5.

Timber Treatment

7.4 Supercourse 500 when used as a DPC or flashing, is suitable for use in contact with timber treated with light organic solvent preservative (LOSP) or water-based timber preservatives. The solvent from the timber treatment must be allowed to evaporate (generally at least one week) prior to the installation of Supercourse 500.

Exposure Zone Fixing Selection

7.5 Where Supercourse 500 is used as a flashing behind masonry veneer, fixings shall be hot dip galvanised clouts in Exposure Zones B and C and stainless steel clouts in Exposure Zone D.

Durability

Serviceable Life

8.1 Supercourse 500 is expected to have a serviceable life in excess of 50 years when it is installed in accordance with the requirements of this Appraisal and the Technical Literature, provided it is not exposed to the weather or ultra-violet (UV) light for a total of more than 30 days, and is never exposed to chemicals, or solvents that will degrade polyethylene.

Readers are advised to check the validity of this Appraisal by referring to the Valid Appraisals listing on the BRANZ website, or by contacting BRANZ.

Control of Internal Fire and Smoke Spread

9.1 Damp-proof courses and flashings are exempt from the surface finish requirements of NZBC Acceptable Solutions C/AS1 – C/AS6 by NZBC Acceptable Solution C/AS1, Paragraph 4.2.2 e), and NZBC Acceptable Solutions C/AS2 – C/AS6, Paragraph 4.17.6 e).

Prevention of Fire Occurring

10.1 Separation or protection must be provided to Supercourse 500 from heat sources such as fire places, heating appliances, flues and chimneys. Part 7 of NZBC Acceptable Solutions C/AS1 – C/AS6 and NZBC Verification Method C/VM1 provide methods for separation and protection of combustible materials from heat sources.

External Moisture

11.1 Supercourse 500, when installed as a flashing in accordance with the Technical Literature and this Appraisal, will assist in the masonry veneer cladding system meeting the performance requirements of Clause E2.3.2.

11.2 Supercourse 500 when used as a DPC in accordance with this Appraisal, prevents walls, floors and structural elements in contact with the ground from absorbing or transmitting moisture in quantities that could cause undue dampness or damage to building elements to meet the performance requirements of Clause E2.3.3

Installation Information

Installation Skill Level Requirements

12.1 Installation must always be carried out in accordance with the Technical Literature and this Appraisal, by competent tradespersons with an understanding of DPC and flashing installation.

Supercourse 500 Installation

General

13.1 Strips of Supercourse 500 may be cut to length with a sharp knife.

DPC Installation

13.2 The surfaces to be separated must be smooth and flat, free from projections such as small stones or sharp ridges that may puncture the membrane when pressure is applied.

13.3 When used to separate timber and wood-based products from concrete or masonry, Supercourse 500 should be temporarily held in place with small hot-dip galvanised clouts or zinc plated staples. The strip of DPC must be wide enough to fully protect the width of the material in contact with the concrete or masonry. Refer also to Paragraph 7.2.

13.4 When used under timber plates fixed over concrete floor slabs and foundation walls, a small slit should be made in the material before pushing down over the bolts or fixings. Alternatively, a small hole can be formed by gently tapping the product resting on top of the bolt until a puncture is formed.

Flashing Installation

13.5 Supercourse 500 must be fixed in place to framing members at maximum 300 mm centres with small hot-dip galvanised clouts.

13.6 Horizontal and vertical joints must be no less than 75 mm wide, with the direction of the lap ensuring that water is shed to the outer face of the flashing.

13.7 At the sill/jamb junction, the jamb flashing must overlap the sill flashing.

Readers are advised to check the validity of this Appraisal by referring to the Valid Appraisals listing on the BRANZ website, or by contacting BRANZ.

Basis of Appraisal

The following is a summary of the technical investigations carried out:

Tests

14.1 The following tests have been carried out on Supercourse 500 by Amdel Ltd, a NATA Certified laboratory: Water permeability, thickness, mass per unit area, pigment, impact resistance, and labelling, all in accordance with AS/NZS 2904 and AS/NZS 4347. The test results have been reviewed by BRANZ experts and found to be satisfactory.

Other Investigations

15.1 Durability and weathertightness opinions were given by BRANZ technical experts.

15.2 The practicability of installation has been assessed by BRANZ and found to be satisfactory.

15.3 The Technical Literature, including installation instructions, has been examined by BRANZ and found to be satisfactory.

Quality

16.1 The manufacture of Supercourse 500 has been examined by BRANZ, and details of the methods adopted for quality control and the quality of the materials used, have been obtained.

16.2 The quality management system of the Supercourse 500 manufacturer, Cromford Pty Ltd, has been assessed and registered as meeting the requirements of ISO 9001: 2008 by ApprovalMark International, Certificate Number QMS 27839.

16.3 The quality of supply to the market is the responsibility of Thermakraft Limited.

16.4 Building designers are responsible for the design of the building, and for the incorporation of Supercourse 500 into their design in accordance with the instructions of Thermakraft Limited.

16.5 Quality of installation is the responsibility of the installer in accordance with the instructions of Thermakraft Limited.

Sources of Information

- AS/NZS 2904: 1995 Damp-proof courses and flashings.
- AS/NZS 4347 Damp-proof courses and flashings - Methods of test.
- NZS 3604: 2011 Timber Framed Buildings.
- NZS 4229: 2013 Concrete masonry buildings not requiring specific engineering design.
- Acceptable Solutions and Verification Methods for New Zealand Building Code External Moisture Clause E2, Ministry of Business, Innovation and Employment, Third Edition July 2005 [Amendment 7, 01 January 2017].
- Ministry of Business, Innovation and Employment Record of Amendments for Compliance Documents and Handbooks.
- The Building Regulations 1992.

Amendments

Amendment No. 1, dated 23 February 2017.

This Appraisal has been amended to update the Appraisal Holder.

Readers are advised to check the validity of this Appraisal by referring to the Valid Appraisals listing on the BRANZ website, or by contacting BRANZ.

BRANZ

In the opinion of BRANZ, Supercourse 500 Damp-Proof Course and Concealed Flashing is fit for purpose and will comply with the Building Code to the extent specified in this Appraisal provided it is used, designed, installed and maintained as set out in this Appraisal.

The Appraisal is issued only to Thermakraft Limited, and is valid until further notice, subject to the Conditions of Appraisal.

Conditions of Appraisal

1. This Appraisal:
   a) relates only to the product as described herein;
   b) must be read, considered and used in full together with the Technical Literature;
   c) does not address any Legislation, Regulations, Codes or Standards, not specifically named herein;
   d) is copyright of BRANZ.
2. Thermakraft Limited:
   a) continues to have the product reviewed by BRANZ;
   b) shall notify BRANZ of any changes in product specification or quality assurance measures prior to the product being marketed;
   c) abides by the BRANZ Appraisals Services Terms and Conditions.
   d) Warrants that the product and the manufacturing process for the product are maintained at or above the standards, levels and quality assessed and found satisfactory by BRANZ pursuant to BRANZ's Appraisal of the product.
3. BRANZ makes no representation or warranty as to:
   a) the nature of individual examples of, batches of, or individual installations of the product, including methods and workmanship;
   b) the presence or absence of any patent or similar rights subsisting in the product or any other product;
   c) any guarantee or warranty offered by Thermakraft Limited.
4. Any reference in this Appraisal to any other publication shall be read as a reference to the version of the publication specified in this Appraisal.
5. BRANZ provides no certification, guarantee, indemnity or warranty, to Thermakraft Limited or any third party.

For BRANZ

Chelydra Percy
Chief Executive

Date of Issue:
22 December 2016

Readers are advised to check the validity of this Appraisal by referring to the Valid Appraisals listing on the BRANZ website, or by contacting BRANZ.

4171E Ecoply Barrier Rigid Air Barrier System

Carter Holt Harvey Plywood
+64 0800 326759
info@ecoply.co.nz
www.chhply.co.nz

SUPPORTING DOCUMENTS

BRANZ Appraisal 827 - Ecoply® Barrier Rigid Air Barrier

Ref 10589. Uploaded 12 Aug 2020

Purpose: Performance, Installation, Maintenance, Warranty

BRANZ Appraised
Appraisal No. 827 [2019]

ECOPLY ® BARRIER RIGID AIR BARRIER



Appraisal No. 827 (2019)

This Appraisal Replaces BRANZ Appraisal No. 827(2014)

BRANZ Appraisals

Technical Assessments of products for building and construction.

CHH Plywood

Carter Holt Harvey Plywood Ltd
Private Bag 92-106
Auckland
Tel: 0800 326 759
Fax: 09 633 1582
Web: www.chhwoodproducts.co.nz

BRANZ

BRANZ
1222 Moonshine Rd,
RD1, Porirua 5381
Private Bag 50 908
Porirua 5240,
New Zealand
Tel: 04 237 1170
branz.co.nz

WFTAO
WORLD FEDERATION OF TECHNICAL ASSESSMENT ORGANISATIONS

Product

1.1 The Ecoply® Barrier Rigid Air Barrier is sealed plywood sheets and tapes designed for use as a rigid wall underlay and air barrier (sheathing) behind cavity wall cladding systems. Ecoply® Barrier is also for use as a wall bracing system to resist wind and earthquake loads on timber framed buildings.

Scope

2.1 Ecoply® Barrier has been appraised for use as a rigid wall underlay, air barrier and temporary weather-protecting sheathing on timber framed buildings within the following scope:

- the scope limitations of NZBC Acceptable Solution E2/AS1, Paragraph 1.1; and,
- with absorbent and non-absorbent wall claddings installed over an 18 mm minimum drained and vented cavity; and,
- with masonry veneer in accordance with NZBC Acceptable Solution E2/AS1; and,
- situated in NZS 3604 Wind Zones up to, and including Extra High.

2.2 Ecoply® Barrier has also been appraised for use as wall bracing systems for timber framed buildings within the scope of NZS 3604.

Building Regulations

New Zealand Building Code (NZBC)

3.1 **In the opinion of BRANZ, Ecoply® Barrier, if used, designed, installed and maintained in accordance with the statements and conditions of this Appraisal, will meet, or contribute to meeting the following provisions of the NZBC:**

Clause B1 STRUCTURE: Performance B1.3.1, B1.3.2 and B1.3.4. Ecoply® Barrier meets the requirements for loads arising from earthquake and wind [i.e. B1.3.3 (f) and (h)]. See Paragraphs 8.1 - 8.4.

Clause B2 DURABILITY: Performance B2.3.1 (a), not less than 50 years, B2.3.1 (b), 15 years and B2.3.2. Ecoply® Barrier meets these requirements. See Paragraphs 9.1 - 9.3.

Clause E2 EXTERNAL MOISTURE: Performance E2.3.2. When used as part of the wall cladding system, Ecoply® Barrier will contribute to meeting this requirement. See Paragraphs 12.1 and 12.2.

Clause F2 HAZARDOUS BUILDING MATERIALS: Performance F2.3.1. Ecoply® Barrier meets this requirement and will not present a health hazard to people.

3.2 Ecoply® Barrier can be used to satisfy the bracing demand requirements of Section 5 of NZS 3604 which is an Acceptable Solution for compliance with NZBC Clause B1.

Readers are advised to check the validity of this Appraisal by referring to the Valid Appraisals listing on the BRANZ website, or by contacting BRANZ.

Technical Specification

4.1 The components and accessories for Ecoply® Barrier, which are supplied by Carter Holt Harvey Woodproducts New Zealand are:

- **Ecoply® Barrier sheets** are 7 mm thick, 1197 mm wide and 2440 and 2745 mm long structural plywood, manufactured from radiata pine in accordance with AS/NZS 2269, and H3.2 CCA treated in accordance with AS/NZS 1604.3. The sheets are coated on the front face and four edges with a beige polyester powder coating. Plywood sheets are marked Ecoply® Barrier for identification.
- **Ecoply® Sealing Tape** - 60 mm x 30 m, tape for sheet joints.
- **Ecoply® Frame Flashing Tape** - 150 mm x 30 m and 200 mm x 30 m.
- **Ecoply® Sill Tape** - 150 mm x 20 m and 200 m x 20 m.

Tapes are marked Ecoply® and type for identification.

4.2 The components and accessories for the Ecoply® Barrier, which are supplied by the building contractor are:

- **Ecoply® Horizontal Jointer** - PVC horizontal 'Z' flashing supplied by E2 Flashing Solutions.
- **Fasteners** - 50 x 2.8 mm flat head hand-driven nails, hot-dip galvanised or stainless steel. Paslode Impulse 50 x 2.8 mm round head gun-nails. Hot-dip galvanised or stainless steel. Stainless steel nails must be ring shanked.

(Note: Hot-dip galvanising must comply with AS/NZS 4680 and stainless steel must be Grade 304 or 316.)

- **Bracing panel end stud connection** - GIB® HandiBrac® one-piece, 2 mm thick, galvanised-steel angle bracket approximately 95 mm high, 65 mm long and 54 mm wide. The bracket is supplied with 5 Type 17 screws 14 g x 35 mm.
- **Timber floor end stud hold down** - 12 mm x 150 mm hot-dipped galvanised coach screws.
- **Concrete floor end stud hold down** - cast-in bolts M12 x 150 mm minimum or proprietary fixings with a minimum characteristic strength of 15 kN.

Handling and Storage

5.1 Handling and storage of all materials supplied by Carter Holt Harvey Woodproducts New Zealand or the building contractor, whether on or off site, is under the control of the building contractor. Ecoply® Barrier plywood sheets must be stacked flat, off the ground and supported on a level platform. They must be kept dry at all times either by storing under cover or providing waterproof covers to the stack. Care must be taken to avoid damage to edges, ends and surfaces. The Ecoply® Tapes must be protected from damage and weather and stored in clean, dry conditions away from direct exposure to sunlight. uPVC jointers must be protected from physical damage and should be stored flat and under cover.

5.2 Other accessories must be stored so they are kept clean, dry and undamaged.

Technical Literature

6.1 Refer to the Appraisals listing on the BRANZ website for details of the current Ecoply® Barrier Specification & Installation Guide which must be read in conjunction with this Appraisal. All aspects of design, use, installation and maintenance contained in the Ecoply® Barrier Specification & Installation Guide and within the scope of this Appraisal must be followed.

Design Information

General

7.1 Ecoply® Barrier is intended for use as a rigid wall underlay and an air barrier fixed over timber framed walls in order to support wind pressures and to act as a secondary barrier to wind-driven rain. With all joints sealed with Ecoply® Tapes no flexible wall underlay is required over the Ecoply® Barrier plywood.

Readers are advised to check the validity of this Appraisal by referring to the Valid Appraisals listing on the BRANZ website, or by contacting BRANZ.

7.2 Commencing from installation, the Ecoply® Barrier including the Ecoply® Tapes must not be exposed to the weather for more than 180 days.

7.3 Ecoply® Barrier may be used as a temporary weather protecting sheathing to allow the insulation and internal lining of the building to proceed before the wall cladding is installed. To achieve temporary weathertightness, all joints, internal and external corners of the Ecoply® Barrier must be sealed, the roof cladding and soffit linings must be installed, the flexible sill and jamb flashing tape system must be installed around the window and door openings, and the window and door joinery must be installed complete with head flashings and air seals. The timber wall framing must have a maximum moisture content as specified by the internal lining system supplier at the time of the insulation installation and internal lining application.

7.4 Ecoply® Barrier is suitable for use under wall claddings as a rigid wall underlay as called up in NZBC Acceptable Solution E2/AS1, Table 23 on timber framed buildings. Refer to Table 1.

Table 1: NZBC E2/AS1, Table 23 Requirements

NZBC E2/AS1 Table 23 Rigid Wall Underlay Properties	Property Performance Requirement	Ecoply® Barrier Actual Property Performance
Vapour Resistance	≤ 7 MN s/g	2.2 MN s/g
Absorbency	≥ 100 g/m^2	1451 g/m^2
Water Resistance	≥ 20 mm	Pass

Timber Treatment

7.5 Timber wall framing behind the Ecoply® Barrier must be treated as required by NZBC Acceptable Solution B2/AS1.

Timber Framing

7.6 Timber framing must be minimum 90 x 45 mm structural grade SG8 and must comply with NZS 3604 for buildings or parts of buildings within the scope limitations of NZS 3604. Buildings or parts of buildings outside the scope of NZS 3604 must be to a specific design in accordance with NZS 3603 and AS/NZS 1170 considering local factors. In all cases studs must be at maximum 600 mm centres. Dwangs must be fitted flush between the studs at maximum 1200 mm centres. *(Note: The timber framing must also be suitable for the selected wall cladding. Refer to the selected cladding system's Technical Literature for specific framing requirements.)*

7.7 Timber wall framing where the Ecoply® Barrier plywood sheets are joined must be nominal 50 mm width (i.e. 45 mm minimum finished width).

7.8 Timber framing must be kiln dried and as dry as practically possible at the time of the Ecoply® Barrier installation.

Ecoply® Barrier Set Out

7.9 All Ecoply® Barrier plywood sheet edges must be fully supported by framing.

7.10 Ecoply® Barrier must be installed vertically. At the base of the wall the plywood sheets must hang below the bottom plate a minimum of 25 mm, up to a maximum of 40 mm.

Ecoply® Barrier Plywood and Cladding Fixing

7.11 Ecoply® Barrier plywood sheets must be fixed at maximum 150 mm centres around the perimeter of each sheet and at maximum 300 mm centres to intermediate studs. In Extra High Wind Zones, the fixing centres on the intermediate studs must be closed up to maximum 150 mm centres. The fixings are at the same centres regardless of whether the Ecoply® Barrier plywood is being used for bracing or not.

7.12 The length of the selected wall cladding fasteners must be increased by a minimum of 7 mm to maintain the face load strength of the wall cladding system.

Readers are advised to check the validity of this Appraisal by referring to the Valid Appraisals listing on the BRANZ website, or by contacting BRANZ.

Structure

Mass

8.1 The mass of Ecoply® Barrier is approximately 4.0 kg/m^2. This mass must be added to the selected wall cladding system mass when determining the overall wall cladding mass in terms of NZS 3604.

Wind Zones

8.2 Ecoply® Barrier is suitable for use in all Wind Zones of NZS 3604, up to, and including, Extra High.

Bracing

8.3 The bracing units achieved (wind and earthquake) for the Ecoply® Barrier are given in Table 2. The Technical Literature gives details of edge and end fixing distances and provides comprehensive construction and panel hold-down details.

8.4 The bracing units are derived from the BRANZ P21 test method based on a wall height of 2.4 m. For greater wall heights the bracing rating is calculated by multiplying the appropriate value shown in Table 2 by 2.4 divided by the wall height in metres. Walls lower than 2.4 m shall be rated as if they were 2.4 m in high.

Table 2: Bracing Ratings for Ecoply® Barrier Structural Plywood Brace

Specification No.	Minimum Wall Length	Lining Requirements	Bottom Plate Hold-down and Fixing	BUs/m Wind	BUs/m Earthquake
EPBI	0.4 m	Ecoply® Barrier one side	GIB HandiBrac®*	80	95
	0.6 m			95	105
	1.2 m			120	135**
EP2	0.6 m	Ecoply® Barrier or Ecoply® each side	GIB Handibrac®	105	115
EPBS	0.4 m	Ecoply® Barrier one side	No additional fastening*	60	60
	0.6 m			60	65
	1.2 m			65	70
	2.4 m			80	90
EPBG	0.4 m	Ecoply® Barrier one side and 10 mm GIB® Standard plasterboard other side	GIB HandiBrac®	100	115
	1.2 m			150**	150**

Notes:

** Bottom plate fixed in accordance with the requirements of NZS 3604.*

*** Timber Floors - A limit of 120 BU/m applies to NZS 3604 timber floors.*

Penetrations for Services

8.5 Small openings for services of up to 90 x 90 mm may be placed no closer than 90 mm to the edge of the bracing element and service penetrations up to a maximum of 150 mm diameter may be placed no closer than 150 mm from the sheet edge, without affecting the bracing rating of the panel.

Connections

8.6 The Ecoply® Barrier Technical Literature contains a top plate hold down detail and a lintel tie down connection detail that are alternatives to the details given in NZS 3604.

Readers are advised to check the validity of this Appraisal by referring to the Valid Appraisals listing on the BRANZ website, or by contacting BRANZ.

Durability

9.1 Ecoply® Barrier meets code compliance with NZBC Clause B2.3.1 (a), not less than 50 years when used where the cladding durability requirement or expected serviceable life is not less than 50 years, e.g. behind masonry veneer, or where it is used as a bracing element, and code compliance with NZBC Clause B2.3.1 (b), 15 years where the cladding durability requirement is 15 years and the Ecoply® Barrier is not used as a bracing element.

Serviceable Life

9.2 Provided Ecoply® Barrier is not exposed to the weather or ultra-violet light for a total of more than 180 days, and provided the exterior cladding is maintained in accordance with the cladding manufacturer's instructions and the cladding remains weather resistant, the Ecoply® Barrier is expected to have a serviceable life of at least 50 years.

9.3 Areas of geothermal activity and coastal locations can be very corrosive to fasteners, especially coastal locations within distances of up to 500 metres of the sea including harbours, or 100 metres from tidal estuaries and sheltered inlets in some instances. These coastal locations are defined in NZS 3604 as Zone D and stainless steel fasteners must be used. For installation in NZS 3604 Corrosion Zones C and B hot-dip galvanised steel fasteners complying with the requirements of NZS 3604 may be used.

Maintenance

10.1 Ecoply® Barrier will not normally require maintenance. However, if damage occurs to the cladding or lining protecting the sheathing or to the sheathing itself, then repairs or replacement must be carried out to ensure the integrity of the rigid air barrier.

Prevention of Fire Occurring

11.1 Separation or protection must be provided to the Ecoply® Barrier and associated combustible materials from heat sources such as fire places, heating appliances, flues and chimneys. Part 7 of NZBC Acceptable Solutions C/AS1 - C/AS6 and NZBC Verification Method C/VM1 provide methods for separation and protection of combustible materials from heat sources.

External Moisture

12.1 Ecoply® Barrier must be used behind claddings that meet the performance requirements of NZBC Clause E2.

12.2 Ecoply® Barrier, when installed in accordance with the Ecoply® Barrier Specification & Installation Guide and this Appraisal, will assist in the total cladding system's compliance with NZBC Clause E2.

Installation Information

Installation Skill Level Requirements

13.1 Installation must always be carried out in accordance with the Ecoply® Barrier Technical Literature and this Appraisal by, or under the supervision of, a Licensed Building Practitioner (LBP) with the relevant Licence Class.

System Installation

Ecoply® Barrier Installation

14.1 Ecoply® Barrier plywood sheets may be cut using any circular saw or hand saw tool. Holes and cut-outs may be formed by using a hole saw.

14.2 Sheets must be dry prior to installation. Cut edges that are left exposed must be sealed in accordance with the Ecoply® Barrier Specification & Installation Guide prior to installation.

14.3 Prior to fixing Ecoply® Barrier plywood sheets, a check must be made to ensure all sheet edges will be supported by framing. At the base of the wall, the sheet must hang below the bottom plate by a minimum of 25 mm.

Readers are advised to check the validity of this Appraisal by referring to the Valid Appraisals listing on the BRANZ website, or by contacting BRANZ.

14.4 Ecoply® Barrier plywood sheets must be fixed to the timber framing with 50 x 2.8 mm hot dipped galvanised flat head clouts or 50 x 2.8 mm ring shanked stainless steel nails. Nails may be either hand driven or power driven. Refer to Paragraph 7.11 for fixing centres and Paragraph 9.3 for material selection.

14.5 At vertical joints Ecoply® Barrier must be installed with a 1.5-3.0 mm gap between the sheet edges. Sheets at horizontal joints between floor levels must be installed with a minimum 15 mm gap between the edges and must be supported over horizontal framing. All horizontal joints must be flashed with the Ecoply® Horizontal Jointer.

14.6 Any damaged areas of Ecoply® Barrier, or gaps around service penetrations, must be repaired by covering with joint sealing tape.

Joint Sealing Tape Installation

14.7 Ecoply® Barrier plywood sheets must be cleaned of dust and other surface contaminants prior the application of the joint sealing tape to ensure adequate adhesion is achieved.

14.8 All vertical sheet joints, internal and external corners, penetrations or damaged areas and over driven nails must be covered with Ecoply® Sealing Tape. The manufacturer's instructions regarding the application temperatures for the joint sealing tapes must be followed.

Flexible Sill and Jamb Tape Installation

14.9 The Ecoply® Sill Tape and Ecoply® Frame Flashing Tape must be installed in accordance with the Ecoply® Barrier Specification & Installation Guide. Particular attention must be paid to the installation of the sill and jamb tapes around window and door joinery openings to ensure all exposed timber wall framing in the opening is protected.

Inspections

14.10 The Ecoply® Barrier Specification & Installation Guide must be referred to during the inspection of the Ecoply® Barrier installations.

Health and Safety

15.1 Ecoply® Barrier must be handled in accordance with the Material Safety Data Sheet for H3.2 CCA treated Ecoply®.

15.2 When power tools are used for cutting or forming holes, health and safety measures as set out in the Ecoply® Barrier Specification & Installation Guide must be undertaken because of the amount of dust generated.

15.3 Safe use and handling procedures for the Ecoply® Barrier and the components that make up the cladding system are provided in the relevant manufacturers' Installation Guides.

Basis of Appraisal

The following is a summary of the technical investigations carried out:

Tests

16.1 Racking tests were carried out in accordance with BRANZ Technical Paper P21. The earthquake and wind bracing ratings were determined using the evaluation procedures outlined in BRANZ Technical Recommendation No. 10. The test results and laboratory methods have been reviewed by BRANZ and found to be satisfactory.

16.2 Testing has been carried out by BRANZ to determine the face load pressure resistance of Ecoply® Barrier.

16.3 Testing to determine the resistance of Ecoply® Barrier plywood to water vapour transmission in accordance with AS/NZS 4200.1 and resistance to water penetration in accordance with AS/NZS 4201.4 has been completed. The results have been reviewed by BRANZ and found to be satisfactory.

Readers are advised to check the validity of this Appraisal by referring to the Valid Appraisals listing on the BRANZ website, or by contacting BRANZ.

16.4 The Ecoply® Sealing Tape, Frame Flashing Tape and Sill Tape have been tested to BRANZ criteria to assess the tensile strength of control and UV aged material, nail sealability, water resistance of control and UV accelerated aged material and pliability. BRANZ has determined that the tapes are fit for purpose for the intended use. The adhesion to the Ecoply® Barrier plywood sheet has also been tested and found to be satisfactory.

Other Investigations

17.1 Structural and durability opinions were given by BRANZ technical experts.

17.2 An assessment was made of the durability of the Ecoply® Barrier Tapes by BRANZ technical experts.

17.3 BRANZ expert opinion on NZBC E2 code compliance for Ecoply® Barrier was based on evaluation of all details within the scope and as stated within this Appraisal. The details contained within the Ecoply® Barrier Specification & Installation Guide have been reviewed and an opinion has been given by BRANZ technical experts that the system will meet the performance levels of Acceptable Solution E2/AS1 for a rigid wall underlay.

17.4 Site inspections were carried out by BRANZ to assess the practicability of installation.

17.5 The Ecoply® Barrier Specification & Installation Guide has been examined by BRANZ and found to be satisfactory.

Quality

18.1 The manufacture of the Ecoply® Barrier plywood has been examined by BRANZ, including methods adopted for quality control. Details regarding the composition of the materials used were obtained by BRANZ and found to be satisfactory.

18.2 The quality of materials, components and accessories supplied by Carter Holt Harvey Woodproducts New Zealand is the responsibility of Carter Holt Harvey Woodproducts New Zealand. The quality control system for the manufacture of the plywood used for the Ecoply® Barrier has been assessed and registered as meeting the requirements of AS/NZS 2269 by the Engineered Wood Products Association of Australasia, Certificate No. 911.

18.3 The manufacture of Ecoply® Tapes has been examined on behalf of BRANZ, including methods adopted for quality control. Details of the quality and composition of the materials used were obtained and found to be satisfactory.

18.4 Quality of installation on site of components and accessories supplied by Carter Holt Harvey Woodproducts New Zealand and the building contractor is the responsibility of the installer.

18.5 Designers are responsible for the building design, and building contractors are responsible for the quality of installation in accordance with the instructions of Carter Holt Harvey Woodproducts New Zealand.

Sources of Information

- AS/NZS 1170: 2002 Structural design action - General principles.
- AS/NZS 2269: 2012 Plywood - Structural.
- AS/NZS 4200.1: 2017 Pliable building membranes and underlays - materials.
- AS/NZS 4201.4: 1994 Pliable building membranes and underlays - Methods of test - Resistance to water penetration.
- NZS 3602: 2003 Timber and wood-based products for use in building.
- NZS 3603: 1993 Timber Structures Standard.
- NZS 3604: 2011 Timber-framed buildings.
- Acceptable Solutions and Verification Methods for New Zealand Building Code External Moisture Clause E2, Ministry of Business, Innovation and Employment, Third Edition July 2005 (Amendment 8, 30 November 2018).
- Ministry of Business, Innovation and Employment Record of amendments - Acceptable Solutions, Verification Methods and handbooks.
- The Building Regulations 1992.

Readers are advised to check the validity of this Appraisal by referring to the Valid Appraisals listing on the BRANZ website, or by contacting BRANZ.

In the opinion of BRANZ, Ecoply® Barrier Rigid Air Barrier is fit for purpose and will comply with the Building Code to the extent specified in this Appraisal provided it is used, designed, installed and maintained as set out in this Appraisal.

The Appraisal is issued only to Carter Holt Harvey Plywood, and is valid until further notice, subject to the Conditions of Appraisal.

Conditions of Appraisal

1. This Appraisal:
   a) relates only to the product as described herein;
   b) must be read, considered and used in full together with the Technical Literature;
   c) does not address any Legislation, Regulations, Codes or Standards, not specifically named herein;
   d) is copyright of BRANZ.
2. Carter Holt Harvey Plywood:
   a) continues to have the product reviewed by BRANZ;
   b) shall notify BRANZ of any changes in product specification or quality assurance measures prior to the product being marketed;
   c) abides by the BRANZ Appraisals Services Terms and Conditions;
   d) warrants that the product and the manufacturing process for the product are maintained at or above the standards, levels and quality assessed and found satisfactory by BRANZ pursuant to BRANZ's Appraisal of the product.
3. BRANZ makes no representation or warranty as to:
   a) the nature of individual examples of, batches of, or individual installations of the product, including methods and workmanship;
   b) the presence or absence of any patent or similar rights subsisting in the product or any other product;
   c) any guarantee or warranty offered by Carter Holt Harvey Plywood.
4. Any reference in this Appraisal to any other publication shall be read as a reference to the version of the publication specified in this Appraisal.
5. BRANZ provides no certification, guarantee, indemnity or warranty, to Carter Holt Harvey Plywood or any third party.

For BRANZ

Chelydra Percy
Chief Executive

Date of Issue:
21 June 2019

Readers are advised to check the validity of this Appraisal by referring to the Valid Appraisals listing on the BRANZ website, or by contacting BRANZ.

4282C Specialized EZpanel AAC Panel Cladding System

Specialized Construction Products Ltd
+64 09 4144499
scot@specialized.co.nz
www.specialized.co.nz

SUPPORTING DOCUMENTS

EZpanel Cavity System Branz Appraisal No. 649

Ref 27741. Uploaded 22 Jun 2021

Purpose: Performance, Installation

EZPanel Installation Guide

Ref 27742. Uploaded 22 Jun 2021

Purpose: Installation

EZPanel Specification

Ref 27743. Uploaded 22 Jun 2021

Purpose: Performance, Installation, Maintenance, Warranty

Specialized Construction Products Ltd EZpanel AAC Panel Cladding System 101753

Ref 10272. Uploaded 26 Jun 2020

Purpose: Performance, Installation, Maintenance, Environmental

BRANZ Appraised
Appraisal No. 649 [2020]

EZPANEL CAVITY SYSTEM



Appraisal No. 649 (2020)

This Appraisal replaces BRANZ Appraisal No. 649 [2009]

BRANZ Appraisals

Technical Assessments of products for building and construction.

Specialized Construction Products Ltd
PO Box 101 127
North Shore Mail Centre
Auckland
Tel: 0800 0800 79
Email: info@specialized.co.nz
Web: www.specialized.co.nz

BRANZ
1222 Moonshine Rd,
RD1, Porirua 5381
Private Bag 50 908
Porirua 5240,
New Zealand
Tel: 04 237 1170
branz.co.nz

Product

1.1 The EZpanel Cavity System is a cavity-based external wall cladding system for residential and light commercial type buildings where domestic construction techniques are used. The system consists of autoclaved aerated concrete (AAC) panels (EZpanels) fixed over polystyrene battens to form a 20 or 40 mm cavity, or timber batten blocks to form a 40 mm cavity.

1.2 The EZpanel Cavity System is finished with either a cement-based option or an acrylic-based option. The cement-based option consists of a base coat of MLC plaster followed by either a cement-based finishing plaster or an acrylic-based finishing plaster. The acrylic-based option consists of a flanking coat of MLC plaster followed by a mesh coat of Powaflex acrylic plaster and an acrylic-based finishing plaster. Both base coat options are finished with an acrylic exterior paint system.

1.3 The system incorporates a primary and secondary means of weather resistance (first and second line of defence) against water penetration by separating the cladding from the external wall framing with a nominal 20 mm or 40 mm drained cavity.

Scope

2.1 The EZpanel Cavity System has been appraised as an external wall cladding system for buildings within the following scope:

- the scope limitations of NZBC Acceptable Solution E2/AS1, Paragraph 1.1; and,
- with a risk score of 0-20, calculated in accordance with NZBC Acceptable Solution E2/ AS1, Table 2; and,
- situated in NZS 3604 Wind Zones up to, and including Extra High.

2.2 The EZpanel Cavity System has also been appraised for weathertightness and structural wind loading when used as an external wall cladding system for buildings within the following scope:

- the scope limitations of NZBC Acceptable Solution E2/AS1, Paragraph 1.1; and,
- constructed with timber and steel framing subject to specific engineering design; and,
- situated in specific design wind pressures up to a maximum design differential ultimate limit state (ULS) of 2.5 kPa.

2.3 The EZpanel Cavity System must only be installed on vertical surfaces *(except for tops of parapets, sills and balustrades, which must have a minimum 10° slope and be waterproofed in accordance with the Technical Literature).*

2.4 The system is appraised for use with aluminium window and door joinery that is installed with vertical jambs and horizontal heads and sills. *(The Appraisal of the EZpanel Cavity System relies on the joinery meeting the requirements of NZS 4211 for the relevant Wind Zone or wind pressure.)*

2.5 Installation of components and accessories supplied by Specialized Construction Products Ltd, its certified distributors and approved applicators must be carried out only by Specialized Construction Products Ltd approved applicators.

Readers are advised to check the validity of this Appraisal by referring to the Valid Appraisals listing on the BRANZ website, or by contacting BRANZ.

Building Regulations

New Zealand Building Code (NZBC)

3.1 **In the opinion of BRANZ, the EZpanel Cavity System if designed, used, installed and maintained in accordance with the statements and conditions of this Appraisal, will meet the following provisions of the NZBC:**

Clause B1 STRUCTURE: Performance B1.3.1, B1.3.2 and B1.3.4. The EZpanel Cavity System meets the requirements for loads arising from self-weight, earthquake, wind, impact and creep [i.e. B1.3.3 (a), (f), (h), (j) and (q)]. See Paragraphs 10.1 - 10.5.

Clause B2 DURABILITY: Performance B2.3.1 (b), 15 years, B2.3.1 (c), 5 years, and B2.3.2. The EZpanel Cavity System meets these requirements. See Paragraphs 11.1 - 11.3.

Clause E2 EXTERNAL MOISTURE: Performance E2.3.2. The EZpanel Cavity System meets this requirement. See Paragraphs 17.1 - 17.5.

Clause F2 HAZARDOUS BUILDING MATERIALS: Performance F2.3.1. The EZpanel Cavity System meets this requirement and will not present a health hazard to people.

Technical Specification

4.1 System components and accessories supplied by Specialized Construction Products Ltd are as follows:

EZpanel

- EZpanel panels are 50 mm thick, manufactured from AAC with an approximate density of 690 kg/m^3. EZpanel panels are supplied in lengths of 2.2 m long x 600 mm wide.

Cavity Battens

- Cavity battens are manufactured from ultra high density (Class UHD) EPS with a density of no less than 28 kg/m^3. The battens are 50 mm wide by 21 mm thick or 50 mm wide by 41 mm thick and are supplied in 1200 mm lengths.

Cavity Batten Blocks

- Cavity batten blocks are 200 mm long x 40 mm thick x 40 mm wide timber treated to Hazard Class H3.2 CCA. The blocks are cut with a 15° slope on the top edge.

Base Coat Plasters

- **EZpanel Base Coat** is a polymer modified, Portland cement-based plaster supplied in 20 kg bags and is mixed on site with clean water. It is applied as the base coat around window and door joinery penetrations in a minimum 2-3 mm layer followed by the embedment of fibreglass mesh reinforcement in the outer surface.
- **Powaflex** is a fibre-reinforced acrylic plaster supplied in 20 kg bags that is mixed on site with clean water. It is applied in a minimum 2-3 mm layer followed by the embedment of fibreglass mesh reinforcement in the outer surface.

Finishing Plasters

- **Fine Mesh Coat** is a polymer modified, Portland cement-based plaster supplied in 20 kg bags and is mixed on site with clean water. It is used to achieve a heavy stucco texture finish when sprayed through a hopper gun or a sagola gun.
- **Spanish Finish** is a polymer modified, Portland cement-based finishing plaster supplied in 20 kg bags and is mixed on site with clean water. It is trowel applied in various thicknesses over the mesh coat to achieve an undulating style finish.
- **Float Finish** is a polymer modified, Portland cement-based finishing plaster supplied in 20 kg bags and is mixed on site with clean water. It is trowel applied in two coats (1-2 mm per layer) over the mesh coat and is polished flat to achieve a fine granular finish.
- **Coarse Texture** is a coarse mesh coat. A polymer-modified, cement-based plaster which can be sprayed through a sagola gun to achieve a finely spiked texture finish.

Readers are advised to check the validity of this Appraisal by referring to the Valid Appraisals listing on the BRANZ website, or by contacting BRANZ.

- **Granopor Fine 1.0 mm Acrylic Texture** is a ready to use, synthetic resin-based render which is polished flat to achieve a fine granular finish. It is supplied in 30 kg pails.
- **Granopor Top 1.5 mm Acrylic Texture** is a ready to use, synthetic resin-based render which is polished flat to achieve a fine granular finish or spray applied to achieve a fine stippled appearance. It is supplied in 30 kg pails.

Accessories

- **Reinforcing mesh** - alkali-resistant fibreglass mesh with a nominal mesh size of 4 mm square and a weight of 150 g/m^2 for use in domestic and light commercial situations.
- **uPVC components** - base bead, EZpanel sill/jamb flashing, head flashing, edge bead, high backed U-Channel, flat 70 mm U-Channel, 20 x 20 L-Bead, 50 x 20 L-Bead, 8 mm control joint and corner socket.
- **EZpanel fixings (timber frame with EPS battens)** - 100 mm long (for 20 mm cavity) and 120 mm long (for 40 mm cavity) AS 3566 Corrosion Class 4 wood screws with a head diameter of 14 mm and a shank diameter of 5.1 mm in NZS 3604 defined Exposure Zones B and C and Grade 304 Stainless Steel in Exposure Zone D.
- **EZpanel fixings (timber frame with cavity batten blocks)** - 75 mm long AS 3566 Corrosion Class 4 wood screws with a head diameter of 14 mm and a shank diameter of 5.3 mm in NZS 3604 defined Exposure Zones B and C and Grade 304 Stainless Steel in Exposure Zone D.
- **EZpanel fixings (steel frame with EPS battens)** - 100 mm long (for 20 mm cavity) and 120 mm long (for 40 mm cavity) AS 3566 Corrosion Class 4 self-drilling screws with a head diameter of 14 mm and a shank diameter of 5.1 mm in NZS 3604 defined Exposure Zones B and C and Grade 304 Stainless Steel in Exposure Zone D. Refer to Paragraph 7.8 for foundation support requirements.
- **EZpanel Adhesive** - AAC compatible adhesive for temporarily bonding EZpanel panel joints during construction and for adhering uPVC components to the EZpanel panels as and where required.

Plastershield

- Plastershield is a 100% acrylic-based exterior paint formulated for use over Specialized Construction Products Ltd cement-based and acrylic-based finishing plasters. It is supplied in 10 litre and 20 litre pails.

4.2 Accessories used with the system which are supplied by the Specialized Construction Products Ltd approved applicators are:

- **Cavity batten fixings** - 30 x 2.5 mm hot-dip galvanised steel flat head nails for timber frame, or construction adhesive for temporary fixing to building underlay over timber or steel frame.
- **Cavity batten block fixings** - 75 x 3.15 mm hot-dip galvanised ring shank flat head nails. *(Note: the hot-dip galvanising must comply with AS 3566.2.)*
- **Waterproof membrane tapes** - tapes covered by a valid BRANZ Appraisal for use as waterproof membranes over the tops of plastered parapets, balustrades, fixing blocks and the like.
- **Flexible sealant** - sealant complying with NZBC Acceptable Solution E2/AS1, or sealant covered by a valid BRANZ Appraisal for use as a weather sealing sealant for exterior use.

4.3 Accessories used with the system which are supplied by the building contractor are:

- **Flexible wall underlay** - building paper complying with NZBC Acceptable Solution E2/AS1 Table 23, or breather-type membranes covered by a valid BRANZ Appraisal for use as wall underlays.
- **Flexible building underlay support** - polypropylene strap, 75 mm galvanised mesh, galvanised wire, or additional vertical battens for securing the flexible building underlay in place and preventing bulging of the bulk insulation into the drainage cavity. *(Note: mesh and wire galvanising must comply with AS/NZS 4534.)*
- **Rigid wall underlay** - Plywood or fibre cement sheet complying with NZBC Acceptable Solution E2/AS1 Table 23, or rigid sheathing covered by a valid BRANZ Appraisal for use as rigid air barrier systems.

Readers are advised to check the validity of this Appraisal by referring to the Valid Appraisals listing on the BRANZ website, or by contacting BRANZ.

- **Flexible sill and jamb tapes** - flexible flashing tapes complying with NZBC Acceptable Solution E2/AS1 Paragraph 4.3.11, or flexible flashing tapes covered by a valid BRANZ Appraisal for use around window and door joinery openings.
- **Window and door trim cavity air seal** - air seals complying with NZBC Acceptable Solution E2/AS1 Paragraph 9.1.6, or self expanding, moisture cure polyurethane foam air seals covered by a valid BRANZ Appraisal for use around window, door and other wall penetration openings.

Paint System Specification

4.4 At least two coats of a 100% acrylic-based exterior paint must be used over the finishing plasters to make the system weathertight and give the desired finish colour to exterior walls. Specialized Construction Products Ltd allows the use of other acrylic exterior paint systems over the finishing plasters. An acrylic exterior paint system complying with any of Parts 7, 8, 9 or 10 of AS 3730 may be used. Paint colours must have a light reflectance value of 25% minimum regardless of gloss value. Proprietary paint systems not supplied by Specialized Construction Products Ltd have not been assessed and are therefore outside the scope of this Appraisal.

Handling and Storage

5.1 Handling and storage of all materials supplied by Specialized Construction Products Ltd or the approved applicators, whether on or off site, are under the control of Specialized Construction Products Ltd approved applicators. Dry storage must be provided on site for the EZpanel panels, fibreglass mesh and bags of plaster. EPS battens, uPVC flashings and profiles must be protected from direct sunlight and physical damage, and should be stored flat and under cover. Liquid components must be stored in frost-free conditions.

5.2 Handling and storage of all materials supplied by the building contractor, whether on or off site, are under the control of the building contractor. Materials must be handled and stored in accordance with the relevant manufacturer's instructions.

Technical Literature

6.1 Refer to the Appraisals listing on the BRANZ website for details of the current Technical Literature for the EZpanel Cavity System. The Technical Literature must be read in conjunction with this Appraisal. All aspects of design, use, installation and maintenance contained in the Technical Literature and within the scope of this Appraisal must be followed. Reference can also be made to the BRANZ Texture Coated Claddings Good Practice Guide for general design and installation information.

Design Information

Framing

Timber Treatment

7.1 Timber wall framing behind the EZpanel Cavity System must be treated as required by NZBC Acceptable Solution B2/AS1.

Timber Framing

7.2 Timber framing must comply with NZS 3604 for buildings or parts of buildings within the scope limitations of NZS 3604. Buildings or parts of buildings outside the scope of NZS 3604 must be to a specific design in accordance with NZS 3603 and AS/NZS 1170. Where specific design is required, the framing must be of at least equivalent stiffness to the framing provisions of NZS 3604. In all cases studs must be at maximum 600 mm centres. Dwangs must be fitted flush between the studs at maximum 800 mm centres.

Readers are advised to check the validity of this Appraisal by referring to the Valid Appraisals listing on the BRANZ website, or by contacting BRANZ.

7.3 For specifically designed timber framed buildings situated in Wind Zones above NZS 3604 defined Extra High, there must be a minimum timber framing size of 90 x 45 mm, and a minimum timber grade of MSG8.

7.4 Timber framing must have a maximum moisture content of 24% at the time of the cladding application. *(Note: If EZpanel panels are fixed to framing with a moisture content of greater than 24% problems may occur at a later date due to excessive timber shrinkage.)*

Steel Framing

7.5 Steel framing must be to a specific design meeting the requirements of the NZBC.

7.6 The minimum framing specification is 'C' section studs and nogs of overall section size of 75 mm web and 32 mm flange. Steel thickness must be a minimum 0.75 mm.

7.7 In all cases, studs must be at maximum 600 mm centres. Dwangs must be fitted flush between the studs at maximum 800 mm centres.

EZpanel Setout

7.8 EZpanels are installed horizontally. Vertical panel edges may be jointed on-stud or off-stud. Horizontal EZpanel panel edges do not require edge fixing, but where 41 mm EPS cavity battens are used with steel framed construction, the bottom row of EZpanels must be fully supported on a rebated foundation. Vertical panel joints must be staggered for each row. The EZpanels must be supported at fixing locations with vertical cavity battens or cavity spacers 100 mm long maximum in accordance with the requirements of NZBC Acceptable Solution E2/AS1, Paragraph 9.1.8.2 (f). At the base of the wall, the EZpanel panels must hang 50 mm below the supporting framing.

General

8.1 When the EZpanel Cavity System is used for specifically designed buildings up to design differential 2.5 kPa ULS wind pressure, only the weathertightness aspects of the cladding, maximum framing centres and EZpanel fixing centres are within the scope of this Appraisal. All other aspects of the building need to be specifically designed and are outside the scope of this Appraisal.

8.2 Punchings in the base bead and head flashing provide a minimum ventilation opening area of 1,000 mm^2 per lineal metre of wall in accordance with the requirements of NZBC Acceptable Solution E2/AS1, Paragraph 9.1.8.3(b).

8.3 The ground clearance to finished floor levels as set out in NZS 3604 must be adhered to at all times. At ground level, paved surfaces, such as footpaths, must be kept clear of the bottom edge of the cladding system by a minimum of 100 mm, and unpaved surfaces by 175 mm in accordance with the requirements of NZBC Acceptable Solution E2/AS1, Table 18. *(Note: A detail showing EZpanel carried into the ground is included in the Technical Literature. This detail is outside the scope of this Appraisal and approval for its use is by specific design.)*

8.4 At balcony, deck or roof/wall junctions, the bottom edge of the EZpanel Cavity System must be kept clear of any adjacent surface, or above the top surface of any adjacent roof flashing by a minimum of 35 mm in accordance with the requirements of NZBC Acceptable Solution E2/AS1, Paragraph 9.1.3.

8.5 All external walls of buildings must have barriers to airflow in the form of interior linings with all joints stopped for Wind Zones up to and including Very High, and rigid underlays for buildings in the Extra High Wind Zone and specifically designed buildings up to 2.5 kPa design differential ULS wind pressure. Unlined gables and walls must incorporate a rigid sheathing or an air barrier which meets the requirements of NZBC Acceptable Solution E2/AS1, Table 23. For attached garages, wall underlays must be selected in accordance with NZBC Acceptable Solution E2/AS1, Paragraph 9.1.3.4. Where rigid underlays are used, the fixing lengths must be increased by a minimum of the thickness of the underlay.

8.6 Where penetrations through the EZpanel Cavity System are wider than the cavity batten spacing, allowance must be made for airflow between adjacent cavities. A minimum 10 mm gap must be left between the bottom of the vertical cavity batten and the flashing to the opening.

Readers are advised to check the validity of this Appraisal by referring to the Valid Appraisals listing on the BRANZ website, or by contacting BRANZ.

8.7 Where the system abuts other cladding systems, designers must detail the junction to meet their own requirements and the performance requirements of the NZBC. The Technical Literature provides some guidance. Details not included within the Technical Literature have not been assessed and are outside the scope of this Appraisal.

Electrical Cables

8.8 PVC sheathed electrical cables must be prevented from direct contact with EPS cavity battens. When cables must penetrate the EPS cavity battens for exterior electrical connections, the cable must be directly supported by passing through an electrical conduit. There is no separation requirement for PVC sheathed electrical cables passing through EZpanel panels.

Control Joints

9.1 Control joints where EZpanel panels are used must be constructed in accordance with the Technical Literature and be provided as follows:

- **Horizontal control joints** - at maximum 6.0 m centres and at inter-storey floor levels.
- **Vertical control joints** - at maximum 8.0 m centres; aligned with any control joint in the structural framing, or where the system abuts different cladding types.

(Note: Horizontal and vertical control joints must be located over structural supports. The Technical Literature provides some guidance for the design of vertical control joints where the system abuts different cladding types. Details not included within the Technical Literature are outside the scope of this Appraisal and are the responsibility of the designer - see Paragraph 8.7.)

Inter-storey Junctions

9.2 Inter-storey drained joints must be constructed in accordance with the Technical Literature. Inter-storey joints must be provided to limit continuous cavities to the lesser of 2-storeys or 7 m in height, in accordance with the requirements of NZBC Acceptable Solution E2/AS1, Paragraph 9.1.9.4 (b).

Structure

Mass

10.1 The mass of the EZpanel Cavity System is approximately 34.5 kg/m^2, therefore it is considered a medium wall cladding in terms of NZS 3604.

Impact Resistance

10.2 The system has adequate resistance to impact loads likely to be encountered in normal residential use. The likelihood of impact damage to the system when used in light commercial situations should be considered at the design stage, and appropriate protection such as the installation of bollards and barriers should be considered for vulnerable areas.

Wind Zones

10.3 The EZpanel Cavity System is suitable for use in all Wind Zones of NZS 3604, up to, and including 'Extra High' where buildings are designed to meet the requirements of NZBC Acceptable Solution E2/AS1, Paragraph 1.1, or up to design differential 2.5 kPa ULS wind pressure when the buildings are specifically designed.

EZpanel Fixing (EPS Cavity Battens)

10.4 EZpanel panels must be fixed through the cavity battens and cavity spacers to the wall framing at maximum centres specified in Table 1.

Readers are advised to check the validity of this Appraisal by referring to the Valid Appraisals listing on the BRANZ website, or by contacting BRANZ.

Table 1: EZpanel fixing centres

Wind Zone / Wind Pressure	Fixing Centres (mm) to studs[1]
NZS 3604 Wind Zones up to and including Extra High and specific design wind pressures up to design differential 2.5 kPa ULS with studs at maximum 600 mm centres	300

1. Fixings to be positioned 150 mm in from the panel edge giving an overall fixing layout of 300 mm vertical centres.

Cavity Batten Block and EZpanel Fixing

10.5 Cavity batten blocks must be fixed to the timber framing with two 75 x 3.15 mm hot-dip galvanised ring shank flat head nails, spaced 100 to 140 mm apart from each other. The cavity batten blocks must be fixed to the studs at maximum 600 mm horizontal centres (stud centres), and at maximum 600 mm vertical centres (at all horizontal joints between EZpanel panels). Additional cavity batten blocks may be required at corners and around openings. EZpanel panels must be fixed to the cavity batten blocks with 75 mm long wood screws with a head diameter of 14 mm and a shank diameter of 5.3 mm. The screws must be positioned 50 mm minimum from the edge of the panel and the fixing heads must finish 5 mm below the surface of the panel. The cavity batten block and EZpanel fixing centres as detailed in this paragraph are suitable for NZS 3604 Wind Zones up to and including Extra High and specific design wind pressures up to design differential 2.5 kPa ULS.

Durability

11.1 The EZpanel Cavity System meets the performance requirements of NZBC Clause B2.3.1 (b), 15 years for the cladding system and plaster finish, and the performance requirements of NZBC Clause B2.3.1 (c), 5 years for the exterior paint system.

Serviceable Life

11.2 The EZpanel Cavity System is expected to have a serviceable life of at least 30 years provided the system is maintained in accordance with this Appraisal, and the EZpanel panels, fixings and plaster are continuously protected by a weathertight coating and remain dry in service.

11.3 Microclimatic conditions, including geothermal hot spots, industrial contamination and corrosive atmospheres, and contamination from agricultural chemicals or fertilisers can convert mildly corrosive atmosphere into aggressive environments for fasteners. The fixing of EZpanel panels in areas subject to microclimatic conditions requires specific design in accordance with NZS 3604 Paragraph 4.2.4, and is outside the scope of this Appraisal.

Maintenance

12.1 Regular maintenance is essential to ensure the performance requirements of the NZBC are continually met and to ensure the maximum serviceability of the system.

12.2 Regular cleaning (at least annually) of the paint coating is required to remove grime, dirt and organic growth and to maximise the life and appearance of the coating. Grime may be removed by brushing with a soft brush, warm water and detergent. Paint systems must be recoated at approximately 5-8 yearly intervals in accordance with the paint manufacturer's instructions.

12.3 Annual inspections must be made to ensure that all aspects of the cladding system, including the coating system, plasters, flashings and any sealed joints remain in a weatherproof condition. Any cracks, damaged areas or areas showing signs of deterioration which could allow water ingress, must be repaired immediately. The EZpanel Cavity System must be repaired in accordance with the instructions of Specialized Construction Products Ltd.

12.4 Minimum ground clearances as set out in this Appraisal and the Technical Literature must be maintained at all times during the life of the system. *(Failure to adhere to the minimum ground clearances given in this Appraisal and the Technical Literature will adversely affect the long term durability of the EZpanel Cavity System.)*

Readers are advised to check the validity of this Appraisal by referring to the Valid Appraisals listing on the BRANZ website, or by contacting BRANZ.

Prevention of Fire Occurring

13.1 The EZpanel panels are considered a non-combustible material and need not be separated from heat sources such as fireplaces, heating appliances, flues and chimneys. However, when used in conjunction with, or attached to heat sensitive materials, the heat sensitive material must be separated from heat sources such as fire places, heating appliances, flues and chimneys in accordance with the requirements of Part 7 of NZBC Acceptable Solutions C/AS1 and C/AS2 and NZBC Verification Method C/VM1.

Fire Affecting Areas Beyond the Fire Source

Vertical Fire Spread

14.1 This Appraisal only covers buildings 10 m or less in height. NZBC Functional Requirement C3.2 identifies that external vertical fire spread to upper floors only needs be considered for buildings with a building height greater than 10 m. Control of external vertical fire spread is therefore outside the scope of this Appraisal.

Horizontal Fire Spread

14.2 The EZpanel panels and plaster finishes have a peak heat release rate of less than 100 kw/m^2 and a total heat released of less than 25 MJ/m^2. Testing was carried out as per Paragraph 5.4 of NZBC Acceptable Solution C/AS1 and Paragraph 5.8.1 of NZBC Acceptable Solution C/AS2, achieving a Type A performance. The EZpanel Cavity System can therefore be used within 1 m of the relevant boundary.

14.3 Refer to NZBC Acceptable Solutions C/AS1 and C/AS2 and Verification Method C/VM2 for fire resistance rating and control of external fire spread requirements for external walls.

Fire Resistance Rating of External Walls

15.1 EZpanel Cavity System can be used for load-bearing and non-load-bearing walls to provide two-way passive fire protection. Fire Resistance Ratings (FRRs) of up to 120/120/120 can be achieved with the system. Construction details are contained in the Technical Literature and must be strictly followed to obtain the required FRR.

Movement to Place of Safety

Structural Stability during Fire

16.1 In order to satisfy the requirements of NZBC C6 Structural Stability, designers must ensure that elements with a FRR are structurally supported by elements with at least the equivalent FRR.

External Moisture

17.1 The EZpanel Cavity System, when installed in accordance with this Appraisal and the Technical Literature, prevents the penetration of moisture that could cause undue dampness or damage to building elements.

17.2 The cavity must be sealed off from the roof and sub-floor space to meet the performance requirements of Clause E2.3.5.

17.3 The EZpanel Cavity System allows excess moisture present at the completion of construction to be dissipated without permanent damage to building elements to meet the performance requirements of Clause E2.3.6.

17.4 The details given in the Technical Literature for weather sealing are based on the design principle of having a first and second line of defence against moisture entry for all joints, penetrations and junctions. The ingress of moisture must be excluded by detailing joinery and wall interfaces as shown in the Technical Literature. Weathertightness details that are developed by the designer are outside the scope of this Appraisal and are the responsibility of the designer for compliance with the NZBC.

17.5 The use of the EZpanel Cavity System where there is a designed cavity drainage path for moisture that penetrates the cladding, does not reduce the requirement for junctions, penetrations, etc. to remain weather resistant.

Readers are advised to check the validity of this Appraisal by referring to the Valid Appraisals listing on the BRANZ website, or by contacting BRANZ.

Internal Moisture

18.1 The EZpanel Cavity System alone does not meet NZBC Acceptable Solution E3/AS1, Paragraph 1.1.1 (a). Buildings must be constructed with an adequate combination of thermal resistance and ventilation, and space temperature must be provided to all habitable spaces, bathrooms, laundries and other spaces where moisture may be generated or may accumulate.

Water Vapour

18.2 The EZpanel Cavity System is not a barrier to the passage of water vapour, and when correctly installed will not create or increase the risk of moisture damage resulting from condensation. Refer to Paragraph 18.3 below for specific requirements for steel framed buildings.

18.3 When the EZpanel Cavity System is installed over a steel frame, an expanded polystyrene thermal break must be installed over the building underlay over each steel member to provide a thermal break in accordance with the requirements of NZBC Acceptable Solution E3/AS1, Paragraph 1.1.4 (d). The cavity battens and the rest of the EZpanel Cavity System are then installed over top of the thermal break in accordance with the Technical Literature and this Appraisal.

Installation Information

Installation Skill Level Requirements

19.1 All design and building work must be carried out in accordance with the EZpanel Cavity System Technical Literature and this Appraisal. All building work must be undertaken by Specialized Construction Products Ltd Approved Applicators. Where the work involves Restricted Building Work this must also be completed by, or under the supervision of, a Licensed Building Practitioner (LBP) with the relevant License class.

System Installation

Building Underlay and Flexible Sill and Jamb Tape Installation

20.1 The selected building underlay and flexible sill and jamb tape system must be installed by the building contractor in accordance with the underlay and tape manufacturer's instructions prior to the installation of the cavity battens and the rest of the EZpanel Cavity System. Flexible building underlay must be installed horizontally and be continuous around corners. Underlay must be lapped 75 mm minimum at horizontal joints and 150 mm minimum over studs at vertical joints. Generic rigid sheathing materials must be installed in accordance with NZBC Acceptable Solution E2/AS1 and be overlaid with a flexible wall underlay. Proprietary systems shall be installed in accordance with the manufacturer's instructions. Particular attention must be paid to the installation of the building underlay and sill and jamb tapes around window and door openings to ensure a continuous seal is achieved and all exposed wall framing in the opening is protected.

20.2 Where studs are at greater than 450 mm centres and a flexible wall underlay is being used, a building underlay support must be installed over the underlay at maximum 300 mm centres horizontally.

Aluminium Joinery Installation

20.3 Aluminium joinery must be installed by the building contractor in accordance with the Technical Literature. A 7.5-10 mm nominal gap must be left between the joinery reveal and the wall framing so a PEF rod and air seal can be installed after the joinery has been secured in place. The joinery must be spaced 22-23 mm off of the wall frame to allow the EZpanel Cavity System flashings to be installed.

The EZpanel Cavity System

20.4 The system must be installed in accordance with the Technical Literature by Specialized Construction Products Ltd approved applicators.

20.5 The EZpanel Cavity System plaster system must only be applied when the air and substrate temperature is within the range of +5°C to +30°C.

Readers are advised to check the validity of this Appraisal by referring to the Valid Appraisals listing on the BRANZ website, or by contacting BRANZ.

Inspections

20.6 The Technical Literature must be referred to during the inspection of EZpanel Cavity System installations.

Finishing

20.7 The paint manufacturers' instructions must be followed at all times for application of the paint finish. The plaster must be cured for a minimum of 2-3 days and must be dry before commencing painting.

Health and Safety

21.1 Cutting of EZpanel Cavity System panels must be carried out in well ventilated areas, and a dust mask and eye protection must be worn.

21.2 When power tools are used for cutting, grinding or forming holes, health and safety measures must be observed because of the amount of dust generated.

21.3 Safe use and handling procedures for the components that make up the EZpanel Cavity System are provided in the relevant manufacturer's Technical Literature.

Basis of Appraisal

The following is a summary of the technical investigations carried out:

Tests

22.1 The following testing has been undertaken by BRANZ:

- BRANZ expert opinion on NZBC E2 code compliance for the EZpanel Cavity System was based on evaluation of all details within the scope and as stated within this Appraisal and testing of the Caviteclad Wall Cladding System to E2/VM1 (as contained within NZBC Clause E2, Amendment 5). The testing assessed the performance of the foundation detail, window head, jamb and sill details, meter box head, jamb and sill details, vertical and horizontal control joints, internal and external corners and balustrade to wall junction with a plastered cap. The EZpanel Cavity System follows the same flashing and weathertightness design principles as the Caviteclad Wall Cladding System. In addition to the weathertightness test, the details contained within the Technical Literature have been reviewed, and an opinion has been given by BRANZ technical experts that the system will meet the performance levels of Acceptable Solution E2/AS1 for drained cavity claddings.
- Wind face load and fastener pull through testing for the EZpanel Cavity System. BRANZ determined design wind suction pressures, and by comparing these pressures with the NZS 3604 design wind speeds and AS/NZS 1170 pressure coefficients, the fixing requirements were determined for timber and steel framed walls.
- In-plane shear testing of the EZpanel Cavity System to determine the system's ability to resist its self-weight.
- A racking test was completed to examine the performance of the EZpanel Cavity System when the system was subjected to both serviceability level and ultimate level seismic racking deflections, taken to be ±8 mm and ±36 mm respectively. The plaster system did not crack or show signs of damage for the entire test program.
- Durability testing of the EZpanel panels to verify the durability of the system. The testing included compressive strength, length change during moisture movement, corrosion protection of steel reinforcement and mineralogy by x-ray diffraction crystallography.
- Cone calorimeter testing to determine the peak rate of heat release and total heat release. The results were used to provide an assessment of the EZpanel Cavity System. The testing was carried out in accordance with ISO 5660.
- Fire resistance testing of EZpanel loadbearing timber framed wall systems was carried out in accordance with AS 1530.4.

Readers are advised to check the validity of this Appraisal by referring to the Valid Appraisals listing on the BRANZ website, or by contacting BRANZ.

Other Investigations

23.1 Structural and durability opinions have been provided by BRANZ technical experts.

23.2 Site inspections of EZpanel Cavity System installations have been carried out by BRANZ to assess the practicability of installation, and to examine completed installations.

23.3 The Technical Literature for the EZpanel Cavity System has been examined by BRANZ and found to be satisfactory.

Quality

24.1 The manufacture of the plasters has been examined by BRANZ, including methods adopted for quality control. Details regarding the quality and composition of the materials used were obtained by BRANZ and found to be satisfactory.

24.2 The manufacture of the EZpanel panels has been examined by an agent of BRANZ, including methods adopted for quality control. Details regarding the quality and composition of the materials used were obtained by BRANZ and found to be satisfactory.

24.3 The quality of materials, components and accessories supplied by Specialized Construction Products Ltd is the responsibility of Specialized Construction Products Ltd.

24.4 Quality on site is the responsibility of the Specialized Construction Products Ltd approved applicators.

24.5 Designers are responsible for the building design, and building contractors are responsible for the quality of installation of framing systems and joinery, building wraps, flashing tapes and air seals in accordance with the instructions of Specialized Construction Products Ltd.

24.6 Building owners are responsible for the maintenance of the EZpanel Cavity System installations in accordance with the instructions of Specialized Construction Products Ltd.

Sources of Information

- AS 1530.4: 2014 Methods for fire tests on building materials, components and structures. Fire-resistance tests for elements of construction.
- AS 3566.2: 2002 Self-drilling screws for the building and construction industries.
- AS 3730: 2006 Guide to the properties of paints for buildings.
- AS/NZS 1170: 2002 Structural design actions.
- AS/NZS 4534: 2006 Zinc and zinc/aluminium-alloy coatings on steel wire.
- BRANZ Good Practice Guide: Texture-coated Claddings, 3rd Edition, May 2018.
- ISO 5660.1: 2002 Heat release rate (cone calorimeter method).
- NZS 3602: 2003 Timber and wood-based products for use in building.
- NZS 3603: 1993 Timber Structures Standard.
- NZS 3604: 2011 Timber-framed buildings.
- NZS 4211: 2008 Specification for performance of windows.
- Ministry of Business, Innovation and Employment Record of amendments - Acceptable Solutions, Verification Methods and handbooks.
- The Building Regulations 1992.

Readers are advised to check the validity of this Appraisal by referring to the Valid Appraisals listing on the BRANZ website, or by contacting BRANZ.

BRANZ

In the opinion of BRANZ, the EZpanel Cavity System is fit for purpose and will comply with the Building Code to the extent specified in this Appraisal provided it is used, designed, installed and maintained as set out in this Appraisal.

The Appraisal is issued only to Specialized Construction Products Ltd, and is valid until further notice, subject to the Conditions of Appraisal.

Conditions of Appraisal

1. This Appraisal:
   a) relates only to the product as described herein;
   b) must be read, considered and used in full together with the Technical Literature;
   c) does not address any Legislation, Regulations, Codes or Standards, not specifically named herein;
   d) is copyright of BRANZ.
2. Specialized Construction Products Ltd
   a) continues to have the product reviewed by BRANZ;
   b) shall notify BRANZ of any changes in product specification or quality assurance measures prior to the product being marketed;
   c) abides by the BRANZ Appraisals Services Terms and Conditions;
   d) warrants that the product and the manufacturing process for the product are maintained at or above the standards, levels and quality assessed and found satisfactory by BRANZ pursuant to BRANZ's Appraisal of the product.
3. BRANZ makes no representation or warranty as to:
   a) the nature of individual examples of, batches of, or individual installations of the product, including methods and workmanship;
   b) the presence or absence of any patent or similar rights subsisting in the product or any other product;
   c) any guarantee or warranty offered by Specialized Construction Products Ltd.

   Any reference in this Appraisal to any other publication shall be read as a reference to the version of the publication specified in this Appraisal.
4. BRANZ provides no certification, guarantee, indemnity or warranty, to Specialized Construction Products Ltd or any third party.

For BRANZ

Chelydra Percy
Chief Executive

Date of Issue:
27 May 2020

Readers are advised to check the validity of this Appraisal by referring to the Valid Appraisals listing on the BRANZ website, or by contacting BRANZ.

EZPANEL INSTALLATION GUIDE

EZPanel
LIGHTWEIGHT CONCRETE CLADDING SYSTEM



Project Details

Project Name:

Project Address:

Specification Prepared For:

Specifier's Name:

Date:

Certified Specialized Plastering Contractor:

Licensed Building Practitioner Number:

BRANZ Appraised
Appraisal No.649 (2009)

NEW ZEALAND MADE

Contact Us

Specialized Construction Products Ltd

Auckland Branch
79 Porana Rd, Glenfield
Ph: + 64 9 414 4499

Christchurch Branch
178b Carlyle Rd, Sydenham
Ph: + 64 3 365 3202

Tauranga Branch
90a Maleme St, Greerton
Ph: 07 541 3384

info@specialized.co.nz
www.specialized.co.nz

Introduction

The EZpanel System is a cavity based autoclaved aerated concrete (AAC) panel system which when finished with a layer of fibreglass reinforced polymer modified plaster creates a lightweight, highly durable exterior cladding. As well as providing advantages to the exterior envelope by way of increases in impact resistance and performance during fire, EZpanels will not rot, are pest resistant and have excellent sound insulation properties. The exterior nature of the EZpanels also places their insulation characteristics as close as possible to where temperatures fluctuate reducing ongoing energy consumption compared to most conventional exterior wall systems.

The system is applied over a 20mm 0r 40mm cavity. The system is fully flashed around all penetrations to ensure water doesn't enter the cavity. Unlike wet cavity systems, this negates the need for vents through the panels both above windows and under soffits as is required for plastered brick veneer construction.

EZPanel

LIGHTWEIGHT CONCRETE CLADDING SYSTEM

All the uPVC flashings, fibreglass mesh, resin and plaster components used for the EZpanel System must be supplied by Specialized Construction Products Ltd or one of its Certified Distributors.

The EZpanel System has been tested and appraised for use throughout New Zealand. (BRANZ Appraisal No. 649)

This Manual has been set out as near as possible to the actual construction sequence. Preparation, fixing the EZpanels to various types of framing and backgrounds, sealing the joinery and masking out, preparation of EZpanels prior to plastering and finally the plaster techniques and sequences. This guide must be read in conjunction with the detail data sheets for the EZpanel System.

Framing Set Out (Timber or Steel)

Timber framing must comply with NZS3604 for buildings or parts of buildings within the scope limitations of NZS 3604. Buildings or parts of buildings outside the scope of NZS3604 must be to a specific design in accordance with NZS 3603 and AS/NZS 1170. In all cases studs must be set out at 600mm maximum centres. Dwangs/nogs must be flush fitted at maximum 800mm centres. Timber framing must have a maximum moisture content of 24% at the time cladding commences.

For steel framing the minimum framing specification is 'C' section studs and nogs of overall section size 75mm web and 32mm flange. Steel thickness must be a minimum of 0.75mm

Building Wrap

A building wrap complying with NZBC Acceptable Solution E2/AS1 Table 23, or breather-type membranes covered by a valid BRANZ Appraisal must be used in all circumstances. Building wrap must be installed horizontally and be continuous around corners. The wrap must be lapped 75 mm minimum at horizontal joints and 150 mm minimum over studs at vertical joints. Where studs are at greater than 450 mm centres, polypropylene strap or additional vertical cavity battens must be installed at maximum 300 mm centres to prevent bulk insulation bulging into the cavity. Flexible sill and jamb flashing tapes complying with NZBC Acceptable Solution E2/AS1, Paragraph 4.3.11 or flexible sill and jamb flashing tapes covered by a valid BRANZ Appraisal must be used around all penetrations. All penetrations must have internal air seals applied.

Head Flashings

Proprietary head flashings with minimum ventilation openings of 1000mm2 per lineal metre must be installed over all window heads and door openings. If proprietary head flashings cannot be used, an acceptable alternative flashing must be provided. Please contact Specialized Construction Products Ltd for advice.

Flashings In General

Joists designed to carry decks need to have a continuous flashing fitted before the EZpanels are fixed. Check if there are any special back-flashings required where the EZpanel joins another substrate or curtain wall construction.

Roofing

Where areas over roofs need to be plastered, the roof/wall flashing, including stop ends must be installed by the roofing contractor prior to the commencement of cladding.

Pipes & Meter Boxes

It is critical that pipes are flashed appropriately in accordance with E2/AS1, Fig 68. All pipes must have the building paper turned to the outside of the building and have the building paper taped to the pipe. All pipes must have a downward rake of 5° minimum and must be sealed in place using Silaflex MS or another approved equivalent both before plastering and after the installation of the EZpanel base coat.

All meter boxes must be installed according to the detailed drawings provided with the EZpanel system. A polystyrene wedge must be placed and sealed with a waterproofing membrane onto the top of the meter box and must be able to drain water unimpeded into the cavity behind the cladding.

Particular attention to detail and workmanship must be given to the weatherproofing details contained in the technical literature relating to flashing and sealing building penetrations or junctions with other building materials. All junctions between the EZpanel substrate and dissimilar materials must be correctly flashed and sealed with MS Silaflex or another approved equivalent. The MS sealant must be installed in strict accordance with the manufacturer's requirements and must be left to properly cure prior to plastering.

Scaffolding

Don't accept second best. You need a continuous freestanding scaffold at least 300mm clear of the framing. Movable frames can be used, but you need enough to complete one whole wall at one time.

Site Storage

Products in dry form must be stored in a dry area, off the floor on a timber pallet or timber dunnage and it must be protected from the weather and from mechanical damage. Rotate the stock to ensure that the oldest material is used first. Plaster stock that is older than six months should be discarded. EPS battens, uPVC flashings and profiles must be protected from direct sunlight and physical damage. They should be stored flat and under cover. Liquid components must be stored in a frost free area.

Preparation of Masonry & Concrete Surfaces (Direct Fix Applications)

All nibs, protrusions and excess mortar on the surface of the bricks/blocks or irregularities in the slab must be ground off prior to plastering.

All surfaces to receive an application of the EZpanel System must be clean and free of debris, dirt and dust, efflorescence, grease, oils, curing agents, cleaning solutions, mould and algae or any other contaminants that may affect adhesion. Painted or glossy surfaces must be specially treated prior to the application of any plaster material, please refer to Specialized Construction Products Ltd for specialist advice before you proceed. All cracks that may be the subject to ongoing movement must be correctly repaired and reinforced.

EZPanel
LIGHTWEIGHT CONCRETE CLADDING SYSTEM

Some smooth, dense concrete surfaces must be slush coated before the application of the EZpanel with Tankit bonding plaster to ensure suitable adhesion is created, please refer to Specialized Construction Products Ltd for specialist advice before you proceed. Tilt slab and other precast concrete items should be chemically cleaned with a water blaster to ensure any mould release agents are removed before the plaster is applied. All very porous surfaces should be sealed with an appropriate paint sealer prior to the application of the bonding plaster. Failing to correctly prepare the masonry substrate, may affect the aesthetic appearance of the finished wall.

Do not wet down masonry surfaces before plastering and do not apply base coat plaster to surfaces that are wet from rain or overnight dew.

Fitting EZpanel Battens

20mm Cavity - EZpanel battens are manufactured from ultra high density (Class UHD) expanded polystyrene with an approximate density of 28kg/m3 and measure 21mm x 45mm. They must be fixed to the framing with nails/staples or an appropriate polystyrene compatible adhesive in accordance with the batten layout shown in the detail data sheets.

40mm Cavity – EZpanel battens for a 40mm cavity installation are manufactured from either; (a) Ultra High Density (class UHD) expanded polystyrene with an approximate density of 28kg/m3 measuring 41mm X 55mm and are fixed with an appropriate polystyrene compatible adhesive or 50mm galvanised flat head nails or (b) 40 X 40 X 200 H3.2 timber batten ties with a minimum slope of 15 degrees on the top edge, fixed with 75mm galvanised ringshank nails. 40mm polystyrene battens must only be used in situations where the bottom edge of the sheet is fully supported by a rebate in the slab or an appropriate weight bearing lintel.

All battens must be fixed to the framing over the surface of the chosen building paper in accordance with the batten layout shown in the detail data sheets. Additional vertical battens may be required at internal and external corners and openings. At the soffit the airflow must be blocked off with a continuous horizontal batten and gables must be lined or incorporate an air barrier which meets the requirements of NZBC Acceptable Solution E2/AS1, Table 23. Non-rigid air barriers must have an air resistance of >0.1MN s/m3. Where rigid sheathings are used, the fixing length must be increased by a minimum of the thickness of the sheathing. Horizontal battens must be a maximum length of 100mm long in accordance with the requirements of NZBC Acceptable Solution E2/AS1, Paragraph 9.1.8.2 (f) and can be fixed into place on all noggins/dwangs where required for fixing with a minimum of a 5-degree angle on the top edge. The fewer horizontal battens that are used the better.

Fitting Sill & Jamb Flashings

The use of the EZpanel uPVC sill and uPVC jamb flashings is **MANDATORY.** It is also **MANDATORY** that the sill and jamb flashings are joined in the corner with an EZpanel corner socket using Marley uPVC pipe cement.

Begin by marking and cutting your sill flashing so that it extends 4-5mm past either end of the aluminium joinery (i.e. overall 8-10 mm wider than the window). Once the sill is cut, wipe the left hand end with pipe cement and slide it onto the prongs of the corner socket. Next wipe the right hand end with pipe cement and slide on the right hand corner socket. Slide the socket into place under the window flange and staple it into place as you did with the other end. Next cut your jamb flashings 40mm longer than the length of the window and cut the capillary lip off the top so that the top edge of the capillary lip will finish flush with the top of the joinery when it is slid into place (i.e. overall the jamb should protrude approximately 40mm above the top of the window). Once the jambs have been cut and test fitted, choose one side and wipe the top of the corner socket with pipe cement. Immediately tuck the capillary lip of the jamb flashing behind the flange of the joinery and slide the jamb down into place onto the top of the socket and then repeat the same set of instructions for the other side. When the jambs are in place cut your head flashing 6mm wider than the joinery and glue a uPVC stop end to the flashing before it is stapled into place. Once firmly in place, seal the head flashing uPVC stop ends onto the jamb flashing using Silaflex MS sealant. Once all the flashings are in place seal the jamb flashing to the joinery in the 5mm gap provided by the small block on the jamb flashing and then seal the corner socket to sill flashing. You must also run a bead of sealant along under the joinery to seal the vulnerable gap where the sill flashing meets the joinery.

Sealing around windows is one of the most critical operations for the success of the EZpanel system. The data sheets detail in pictorial terms how the instruction above should be carried out. Follow these details explicitly.
Basic principles to apply when sealing your windows:-

1. Don't be mean with your application of sealant or pipe cement. All beads of sealant must be 5mm across.

2. The sealant has to have a reasonable area to seal against so make sure the background is clean and dry.

3. Always lightly tool or spread your sealant into place with your finger.

Soffits

Soffits shall be fixed into place before the cladding is installed and allowance made to close off the cavity with framing or battens to stop airflow into the roof space. A 5 mm bead of Silaflex MS sealant should be installed at the soffit/EZpanel intersection after the EZpanel is put in place and before plastering commences. In the case of reverse raking soffits or soffits less than 450mm wide a flashing or piece of Protecto EIFS tape shall be provided in accordance with the details shown in the technical literature.

Fixing The EZpanels

The sheets are butt jointed except at corners where one sheet overlaps the other to form a straight finish. The EZpanels must be supported at fixing locations

EZPanel
LIGHTWEIGHT CONCRETE CLADDING SYSTEM

with cavity spacers a maximum of 100mm long in accordance with the requirements of NZBC Acceptable Solution E2/AS1, Paragraph 9.1.8.2(f). Each additional layer of panels must be installed so that the panel joints are staggered by a minimum of 150mm.

All panels must have their edges and there ends buttered with EZfix PU adhesive as they are being installed. The edges of all of the EZpanel sheets must be free of all dust and debris (preferably blown down with compressed air) and should be sprayed down with a mist of water straight before the glue is applied. The glue should be laid in a bead approximately 6-8mm in width before the next sheet is laid onto its edge. This practice should be done as quickly as possible to ensure the glue remains as pliable as possible to aid in the adhesion of the panels. Care must be taken when applying the glue to ensure it does not ooze either into the cavity or onto the outside of the dwelling. Once the panels have been joined and screwed into place any excess glue that oozes out of the joints between the panels should be wiped off or cut from the surface before it has fully cured. The glue must be allowed to dry before the application of the mesh coat.

Care should be taken to carefully cut any irregular shaped holes that may be required. A jigsaw with a steel tooth blade is ideal for this purpose. It is not acceptable to simply cut a square hole for a round outlet and then assume the remaining gap will be plugged with plaster. Gaps and holes in and between the panels must only ever be filled with Ezstop Plaster and must not be filled with expanding foam. The differential thermal characteristics of the expanding foam and the AAC panels will generate a weak point in the system that can be susceptible to thermal cracking.

At the base of walls the finished level of the EZpanel must be at least 50mm below the supporting framing. Additional framing may be required at soffits, internal and external corners and window and door openings for the support and fixing of sheet edges.

Construction joints must be provided as follows:

Horizontal Control Joints – at maximum 6.0m centres and at inter-storey floor levels where unseasoned timber floor joists are used

Vertical Control Joints – at maximum 8.0m centres; aligned with any control joints in the structural framing, or where the system abuts different cladding types

Care should be taken with the chosen placement of control joints. To avoid difficult multi-faceted joints between the various PVC extrusions used in the EZpanel System, control joints should be placed away from the edges of joinery by a minimum of 400mm. Placing control joints directly above and below the joinery creates a weak point where the PVC's intersect that could lead to potential water ingress if not maintained or excessive movement occurs.

Construction joint details are provided in the drawings provided with the system. Inter-storey drained joints must be provided for walls over 2 storeys in height in accordance with the requirements of NZBC Acceptable Solution E2/AS1, Paragraph 9.1.9.4(b). Inter-storey junctions must be constructed in accordance with the technical literature.

The bottom edges of the EZpanels can either be capped with a 50mm High Back U-Channel which is attached to the bottom plate of the dwelling prior application or with a 50mm lipped base bead once they have been fixed into place and trimmed as may be necessary.

Timber Framing

There are four categories listed in NZS 3604: Low, Medium, High and Very High. The 'Building Wind Zone' for the job to be completed must be clearly understood before the application of any plaster.

Fixing Over EPS Battens

EZpanel panels are fixed through the polystyrene cavity battens and spacers to the studs with 100mm or 120mm long Class 4 galvanised or Grade 302 stainless steel screws that have a head size of 14mm. Typically the screws are placed into the panels 150mm from the outside edge giving overall fixing centres of approximately 300mm. Two screws should be put into each stud per panel. Refer to the table 1 for fixing centres.

Table 1: NZS 3604 Wind Zone Fixing Centres for EZpanel Edges and Intermediate Studs

Wind Zone/Pressure	Fixing Centres
Low	300mm
Medium	300mm
High	300mm
Very High	300mm

In high and very high wind zones the screw spacing around penetrations should be reduced to approximately 200mm. This ensures any possible movement between the joinery frame and the finished EZpanel is greatly reduced.

Fixing Over Timber Batten Blocks

For timber framed buildings, installations in NZS3604 Wind Zones up to, and including, 'Extra High' and specific design wind pressures up to and including design differential 2.5kPa ULS, the cavity battens must be fixed to the timber framing with two 75mm long galvanised or stainless steel ring-shank nails. Battens are fixed to studs at maximum 600 horizontal centres, at all horizontal joints between the EZpanels. Additional battens may be required at corners and around openings. The EZpanels are fixed to the battens with 10g x 75mm long, countersunk head Class 4 galvanised screws (Grade 302 Stainless in sea spray zones). The screws must be positioned 50mm minimum from the edge of the panel and the fixing heads must finish 5mm below the surface of the panel.

Steel Framing

The same fixing centres apply as for timber framing. Use Specialized Construction Products Ltd self-drilling 100 mm long AS 3566 Corrosion Class 4 self-drilling screws with a head diameter of 14 mm and a shank diameter of 5.1 mm in NZS 3604 defined Corrosion Zones 1, 2, 3 and 4 and Grade

EZPanel
LIGHTWEIGHT CONCRETE CLADDING SYSTEM

304 Stainless Steel in the sea spray zone.

Concrete & Masonry

(Note: This application is outside the scope of the BRANZ Appraisal.)
To bond EZpanel to masonry surfaces mix up Specialized Construction Products Fine Base Coat plaster with the addition of 1 litre of Specialized Construction Products resin per bag. Cut the EZpanel to size and check the fit. All of the EZpanel to receive a coat of Fine Base Coat must be properly sealed prior to the application of the plaster. To seal the panel a mix of 2 parts water to 1 part Specialized Resin must be painted over the surface and allowed to dry before bonding commences. Failing to correctly prepare and seal the aerated concrete substrate may cause delamination or failure. Once sealed apply the Fine Base Coat plaster to the back of the sheet with a grooved trowel around the perimeter and in vertical strips every 400mm. If there isn't a rebate in the concrete slab, EZpanel masonry anchors must be used to hold the sheets in place while the plaster is drying and to provide a mechanical fix for the EZpanel. Bed each sheet back against the wall, keeping a check that the sheets are flat by using a straight edge across their face. To ensure no thermal bridges are formed keep all the edges closely butted and clear of adhesive plaster.

Finishing The EZpanel

Around the base of the building ensure all lines are straight and level. Trim and adjust where necessary.

Use a two metre straight edge and check the flatness of the EZpanel surfaces. Use a Durarasp to sand off any large irregularities or Specialized's 'Ezstop' plaster to fill any large hollows in the surface of the EZpanels to ensure the surfaces are level and the corners and edges are straight. When sanding and/or skimming is complete, sweep the walls clean of any loose material or dust.

Only once you are satisfied with the flatness of the EZpanel and the lines of the edges, fix any additional uPVC beading (i.e. uPVC corners and base U-channels) and seal around the perimeter (i.e. under the soffit).

Fixing The UPVC Beads

All exposed EZpanel corners and bottom edges must be protected by gluing on the appropriate uPVC section. Your detail drawings show what bead goes where.

The beads are glued on with Maxilam PB Adhesive. Apply glue to all contact surfaces. With the cartridge glue, slide each uPVC bead along the EZpanel edge to spread the glue, pull away slightly for 20 seconds, and then slide into place. This spreading of the glue and allowing a few seconds for the solvents to "flash off" is very important. If you don't, the bead can come unstuck. Be careful not to cover the drainage holes punched in the base extrusions with glue.

Masking

Careful masking of windows, doors, roofing, decks and any other areas where plaster overspray or plaster droppings may occur is critical. Don't be mean with your protection work as it is a very costly exercise to replace roof areas and glazing because your masking wasn't up to the job. Use uPVC or vinyl tape for masking, wet strength masking paper or preferably plastic sheet material.

1. Mask out windows or doors completely to the edge of the aluminium. This will provide a nice finishing line for the 5mm sealant detail. Mask all other areas 5mm away from the edge of the EZpanel to allow for plaster build-up. Use uPVC, cloth or vinyl tape around the perimeter.

2. Don't be tempted to use the paper-backed masking tape where it will get plastered over. The tape softens and falls off.

3. After the mesh/plaster coat or subsequent base coats (not the final texture coat) remove excess plaster by running your finger around the edge masking tape, and then clean the wet plaster edge with a damp paint brush. This ensures the masking tape isn't buried under hard plaster.

Stopping Up

After the EZpanel has; been sanded flat and cleaned down, the uPVC flashings are in place, the windows are sealed, and all the masking is complete, all surfaces that are to be plastered must be sealed using EZpanel sealer. Using a hawke and trowel, or broad knife and EZstop plaster; fill all the screw head holes, stop up and level out the edges of all uPVC beading and fill in any remaining out of level areas of sheet joints. It is important not to "over-stop" screw holes or joints. Don't leave thick edges of plaster because they will "grin through" the finished work.

Sealing The Substrate

The surface of the EZpanels must be properly sealed prior to the application of any plaster. To seal the EZpanels, apply one good coat of undiluted Specialized EZpanel sealer over the entire surface of the dwelling and allow it to completely dry before plastering commences. EZpanel sealer can be applied with a pump-up sprayer, long nap roller or wide paint brush at a spread rate of 10-12m2 per litre. Failing to correctly prepare and seal the surface of the aerated concrete panels may cause delamination, chalking or failure in the base coat.

EZpanel Plaster Preparation

The instructions for mixing are clearly spelt out on the bag. Note: During summer, you can add one litre of resin per bag to help the plaster cure better in hot weather.

It is important that each mix stands for approximately 10 minutes, and is then re-stirred and the final consistency adjusted. This allows the thickening agents in the plaster to take effect and stops the brew becoming too thick too quickly. Do not use plaster that has been mixed for more than one hour. The plaster will continue to stiffen slightly over the hour.

If you are spraying fine base coat plaster to provide a textured finish it is acceptable to add small amounts of water to maintain a regular consistency. In fact if you don't keep the plaster mix adjusted with a little water every now and then, your texture coat will

EZPanel
LIGHTWEIGHT CONCRETE CLADDING SYSTEM

vary. Clean your hopper gun, stirrer and bins between mixes. This will stop you getting contamination in fresh mixes, and will keep your gun spraying evenly.

Plaster & Mesh Coat

The areas around all penetrations should be completed first using EZpanel Base Coat or Fine Mesh Coat to bed soft flexible 160g/m2 alkali resistant mesh. A piece of soft mesh must be used to reinforce the sill, jamb and head flashing onto the surface of the panels and in the corner of any penetration where the sills and jambs meet. Make sure the plaster is scraped hard back to the EZpanel on the outer edges of the mesh. Once all the window reveals, parapet tops and backs, bottom edges and other awkward areas have been completed using the soft flexible narrow mesh, all the flat areas of wall should be done using a 160g/m2 alkali resistant hard mesh combined with EZpanel Base Coat plaster.

EZpanel Base Coat plaster is usually trowel applied with a long 20" x 4" or 20" x 5" steel trowel. The large trowel ensures the first coat of plaster can't be squeezed out too thin.

1. Start at the corner of a wall. Check all masking is done and drop cloths are in place. Plaster a full height section of wall about one and a half metres wide (the width of the mesh). You are aiming for 3mm thickness with this first coat.

2. Cut a length (drop) of mesh slightly longer than the wall area to be covered. Place the mesh against the wet plaster at the top of the EZpanel. The outer corner edge of the mesh must be 100 to 200mm past the corner of the wall.

3. Wipe the mesh very lightly at first into the plaster, starting at the middle and working out. Make sure there are no bubbles or wrinkles in the mesh. Once the mesh is flat against the plaster, apply an even trowel pressure and embed the mesh just below the surface of the plaster. Do not force the mesh hard down onto the surface of the EZpanel. The mesh pattern should be "grinning" through, but the mesh itself completely covered with plaster.

4. Apply a 100 to 200mm band of plaster around the corner and embed the overhanging corner mesh. Once embedded scrape away the plaster at the edge of the mesh to ensure there is no plaster ridge there when you join on later.

5. Repeat the process. Drops of hard mesh do not have to overlap but should be tightly butt joined. If the mesh isn't going to be overlapped any butt join that is created must offset any vertical join in the panels by a minimum of 150mm. The mesh and plaster coat must cover all EZpanel surfaces including the EZpanel edges around all window reveals and sills.

6. At the corners of all openings, apply a second layer of mesh 100 x 200mm (butterfly) embedded on the diagonal. This greatly reduces the chance of any subsequent cracking at these high stress points.

Finishing Options

There are four options once the first mesh and plaster coat have been applied: -

Option 1: Stucco Texture

Fine base coat plaster can be sprayed through a hopper gun or a sagola gun to achieve a heavy stucco plaster finish.

Each 20kg bag of Fine base coat plaster is mixed with approximately 5 litres of clean drinking water. Place all the water for your plaster mix into a clean bucket and while stirring with a powered whisk, add the 20kg bag of plaster and mix to an even consistency. Let the mix stand for 5 minutes and give it a quick restir before application and adjust the final consistency if it is necessary.

The object is to spray on a "wet" second coat of plaster 1 to 2mm thick that will flow together to form a solid flat looking texture coat. The technique could be likened to spray painting where you move on once you have achieved a "wet" finish. Fine base coat plaster mixed wetter than for a mesh coat, sprayed through a hopper gun with a 9mm tip is best for this type of texture.

Once the first spray coat is starting to "tack-off" or going grey dry, you can start to apply the final texture coat. The plaster mix for this third and final coat is about the same as for the mesh coat or slightly stiffer and is known as a "flick coat". The object is to have a plaster mix that won't run together like the previous coat. Use a 7mm nozzle.

The final texture coat is only meant to be a quick flick. The "flick-coat" will even out any discrepancies and provide a uniform texture finish. You will only use approximately 20% of the amount of plaster you used to do your first coat of spray texture. Spray part of this final texture in horizontal bands and part in vertical bands to ensure a uniform even finish. Do not stay too long in one area, as the texture coat will flow together, causing patchiness.

Always texture the external and internal corners first before doing the adjacent large wall areas. It is also good practice to spray the reveals around windows from the inside out and then fill in the areas of wall between these places.

A stucco spray texture must be finished with two coats of Plastershield100% acrylic paint or an approved latex exterior paint system in accordance with the paint specification.

Option 2: Float Finish

Float Finish is a polymer modified cement based plaster which is polished flat to achieve a fine granular finish. The smooth plaster will not cover up background imperfections, particularly when walls are subject to side lighting at certain times of the day.

Each 20kg bag of Float Finish is mixed with approximately 5 litres of clean drinking water. Place all the water for your plaster mix into a clean bucket and while stirring with a powered whisk, add the 20kg bag of plaster and mix to an even consistency. Let the mix stand for 5 minutes and give it

a quick restir before application and adjust the final consistency if it is necessary.

On large walls float finish should be applied by two or more people to ensure a wet edge is maintained. Float finish must be applied in two coats to ensure an even texture is achieved. Begin by trowelling on one tight coat of the float finish plaster with a large steel trowel using the aggregate in the plaster to establish the thickness. Once the first coat has dried, trowel on another coat of the same material (mixed to a slightly thinner consistency) over its surface. As soon as this coat has been laid down with the steel trowel flat, begin polishing its surface with a hard plastic float in a circular motion. This will cut the surface of the wall flat. Regularly clean the excess plaster off the plastic float with a broad knife to reduce the potential for swirl marks. If the plastic float is picking up too much material or is leaving swirl marks on the surface, this indicates that the plaster has not been laid on tight enough with the steel trowel. Finish with a gentle polish of the surface with the plastic float to minimise any slight swirl marks or surface irregularities. Every now and again stand back a couple of metres from the wall and inspect your work to ensure an even finish is being achieved.

Float finish can either be left as it has been finished with the plastic float or while it is still wet (but firm to touch), normally only 5 minutes after application, it can be polished with a damp sponge to close the pores in the texture. Polishing the surface of the walls with a sponge will also remove a small amount of the fines in the plaster giving the wall a grainy look.

Float Finish must be finished with two coats of Plastershield 100% acrylic paint or an approved latex exterior paint system in accordance with the paint specification.

Option 3: Spanish Finish
Spanish Finish is a polymer-modified, cement based plaster used to achieve an undulating adobe style finish. This product can be applied in various thicknesses and using a number of different techniques.

Before finish coating begins ensure the style of finish that is desired has been correctly communicated and understood by the plasterer. A trial sample is highly recommended.

Each 20kg bag of Spanish Finish is mixed with approximately 5 litres of clean drinking water. Once you have established how much water gives you the consistency you want, maintain this measured amount of water for the rest of your mixes. Place all the water for your plaster mix into a clean bucket and while stirring with a powered whisk, add the 20kg bag of plaster and mix to an even consistency. Let the mix stand for 5 minutes and give it a quick restir before application and adjust the final consistency if it is necessary.

The finished thickness of the Spanish Finish must be between 2 to 10mm.

To achieve an uneven application of the Spanish finish use a short steel trowel and apply the plaster in a random fashion using a good amount pressure. Avoid excessive movement of the plaster under the trowel once it has been applied to the wall, otherwise you run the risk of delamination. Allow a little time for the plaster to 'suck off' and then polish all the sharp marks out of the surface using a damp sponge.

If a very thick layer of Spanish finish is being applied for a heavy pattern, wiping over the undulations using a wet soft bristled paint brush can help to soften the surface before it is sponged.

Spanish Finish must be finished with two coats of Plastershield100% acrylic paint or an approved latex exterior paint system in accordance with the paint specification.

Option 4: Baumit GranoporTop 1.5mm Acrylic Texture or GranoporFine 1.0mm Acrylic Texture
(It is recommended to seal the base coat plaster with Baumit Tiefengrund primer before applying Baumit Granopor. Allow to dry for 24 hours).
GranoporTop 1.5mm Acrylic Texture is a ready to use, synthetic resin-based render which is polished flat to achieve a fine granular finish.
GranoporFine 1.0mm Acrylic Texture is a ready to use, synthetic resin-based render which is polished flat to achieve a fine granular finish or sprayed through a hopper gun or a sagola gun to achieve a fine stippled appearance. Smooth textures will not cover up background imperfections, particularly when walls are subject to side lighting at certain times of the day.

Granopor is to be mixed thoroughly with a stirrer before application. The consistency can be adjusted by adding a little bit of water. Baumit Granopor is to be applied to the entire surface with a rust-free steel trowel or sprayed on with a suitable plaster machine, levelled to grain thickness and rubbed with a plastic plasterer's float. Do not mix with other substances. Work evenly and without interruption.

Air, material and subsurface temperatures have to be higher than +5 degrees Celsius during processing and setting. Protect façade against direct solar radiation, rain or strong wind (e.g. scaffolding protection net). High temperatures during summer shorten the drying time and can lead to untimely drying out of the plaster.

Curing

The curing time of finishing plaster will vary due to ambient temperature, relative humidity, surface temperature, surface porosity, application methods, and/or the thickness of the material. All freshly applied material must be protected from inclement weather for a minimum of 24 hours after application. It is the responsibility of the plaster applicator to determine if the product is cured and/or dry prior to applying any additional coats that may be required or exposing the applied product to rain, snow, dew, and/or any other inclement weather condition that may have a detrimental effect. Although some of the finishes contain cement and will not fully cure for 28 days, as long as it is lightly hosed down with fresh water 12 hours prior to painting, it can be painted after the finish coats have cured for a minimum of 3-4 days. Acrylic plaster finishes can be painted as soon as the finished surface has

EZPanel
LIGHTWEIGHT CONCRETE CLADDING SYSTEM

hardened enough for application to take place.

Paint specification

One of the following paint systems must be used over the EZpanel finishing plasters to make the system weathertight and give the desired finish colour to exterior walls.

Plastershield is a 100% acrylic-based paint that has been specially formulated for use over cement based plasters. Plastered surfaces must be coated with a minimum of 2 coats of Plastershield tinted to the selected colour and applied by brush and roller at a spread rate of approximately 6m2/litre. If a dark colour is being applied, we highly recommend that a coat of lime stop/limelock is applied to the finished plaster before painting commences.

As an alternative to Plastershield, a latex based exterior paint system complying with any of Parts 7, 8, 9 or 10 of AS 3730 may be used. The paint system must be applied in accordance with the paint manufacturer's instructions.

Other paint systems are not covered by this specification sheet and Specialized Construction Products Ltd will not warrant the use or suitability of alternative paint systems over the surface of its plaster finishes.

The chosen paint system must have a Light Reflective Value (LRV) of no less than 25.

Limitations

DO NOT apply plaster when the ambient or surface temperature is below 4°C or above 30°C or will be in that range for the 24-hour period after application. When hot, dry, or windy conditions exist, moist curing and protection must be provided. Material that is allowed to freeze or material that dries too quickly may suffer irreparable damage.

DO NOT add any other materials to the plasters used with the system or deviate from the mixing or application procedures outlined in any of Specialized Construction Product's technical data sheets without written approval from Specialized Constructions Products Ltd.

DO NOT apply any plaster unless the substrate has been properly cleaned and prepared.

DO NOT add any more water than prescribed by the technical data sheet for the individual products.

DO NOT wet the wall prior to the application of any plaster material.

DO NOT reactivate any plaster with more water once it has begun to set.

DO NOT mix more plaster than you can use in 45 minutes

NOTE:
Failure to follow the manufacturer's written specifications could result in the following but not limited to spalling, cracking, peeling, chipping, delamination, discoloration, wash off, and overall system failure.

General

1. Use longer steel trowels rather than short ones. The longer trowel covers the area quicker and gives a flatter finish. A long trowel will stop workers from skimping on plaster, as they are unable to push the mesh back into a thin coat of plaster. This helps quality control.

2. Have plenty of plaster buckets and water buckets on the job. Keep a 3" paint brush and water bucket handy for finishing those narrow edges and corners.

3. When applying a stucco texture keep your hopper gun clean and adjusted and your compressor pumping out 90 to 100 PSI. Remember once or twice every day to clean out your air jet with a 1/8" drill bit. A piece of wire or nail will not do this job and is unacceptable.

4. When you are spraying, maintain your plaster mix consistency as you use the plaster. Add a little water when you feel the plaster has stiffened a little. This is critical for a good texture coat. Do not attempt this with plaster that is older than 30 minutes.

5. Organise your day to try and keep out of the hot summer sun particularly round the middle hours of the day.

6. Try and complete a full length of wall in one go, otherwise it can be difficult to disguise the "cold" joint where you restart the next day. If circumstances prevent you finishing a complete wall, try and stop under the middle of a window opening or something similar. Ensure that you leave a leading edge of mesh uncoated so that you can overlap the new drop of mesh the next day. Also scrape off any excess plaster to further reduce the chances of the "cold" joint showing.

7. The fibreglass mesh must not bridge over any construction joints.

8. There must be no horizontal surfaces of EZpanel wall cladding which will be subject to water ponding.

9. Ensure there is no possibility of water leaking in behind the coating due to poor sealing around projections, etc.

10. Any exposed top or bottom edges of sheets must be protected by UPVC beads or by continuing the plaster system over the edges of the sheets.

11. Carefully peel back masking tape so that the masked edge is left undisturbed. Remember, it is important not to leave this job till last. Pull off masking tape as soon as is practicable, preferably while the finish coat is still "green". This will enable you to clean all masked edges with a dry paintbrush and remove/knock off any larger dags of plaster texture.

12. Alkaline EZpanel plaster will mark aluminium joinery and "Colorsteel" roofing. Any overspray must be cleaned off immediately.

EZPanel
LIGHTWEIGHT CONCRETE CLADDING SYSTEM

Maintenance

Any paint film damage must be repaired as soon as possible to prevent water penetration and ensure that the high strength properties of the fibreglass mesh are maintained.

Any impact damaged areas must be thoroughly cleared of any loose material and repaired with a Tankit plaster. This will ensure a positive bond between the original plaster and the repaired area. Refinish and repaint within the following week.

The wall cladding system should be regularly cleaned, at least annually, by washing with clean water to remove dirt and to maintain the finish appearance. Grime may be removed with warm water and detergent.

Plastered walls should be recoated with an approved paint system at 5 to 8 yearly intervals or sooner if required to maintain watertightness. Regular checks, at least annually, must be made of the system to ensure that the weather resistant coating is maintained watertight, and that the sealant, flashings, and other joints continue to perform their function and do not allow water to penetrate. Failure to correctly maintain the system may void any long-term warranties offered with the system. Any accidental damage to the cladding must be repaired immediately using Specialized Construction Products materials.

Warranty

The recommendations, suggestions, statements and technical data provided by Specialized Construction Products Ltd are based on the best current knowledge available and are given for information purposes only without any responsibility for their use. It is expressly understood and agreed that the buyer's sole and exclusive remedy shall be the replacement of defective products, and under no circumstance, shall Specialized Construction Products Ltd be liable for incidental or consequential damages. Specialized Construction Products Ltd neither assumes, nor authorizes, any others to assume for it any liability with respect to furnishing of the product. Handling and use of the products are beyond the control of Specialized Construction Products Ltd; therefore, no warranty is made, expressed or implied, as to the results or on site quality that can be obtained from the use of the product. The long-term durability of the EZpanel system is dependent upon the correct preparation and application of all of its components in strict accordance with all the relevant written instructions and detail sheets. On-site application is beyond the control of Specialized Construction Products' and it cannot guarantee workmanship or the correct preparation and application of its products or systems. The licensed EZpanel contractor shall take the overall responsibility for on-site supervision, staff training, installation, and quality control.

System Guarantee Period

15 years from date of practical completion to plastering.

Workmanship Guarantee Period

5 years from date of practical completion to plastering.

Technical Assistance

Assistance and information is available by calling Specialized Construction Products Ltd on **(09) 414 4499** or by e-mail at **info@specialized.co.nz.**

EZPANEL SPECIFICATION



EZPanel
LIGHTWEIGHT CONCRETE CLADDING SYSTEM

Project details

Project Name:

Project Address:

Specification Prepared For:

Specifier's Name:

Date:

Certified Specialized Plastering Contractor:

Licensed Building Practitioner Number:

BRANZ Appraised
Appraisal No.649 (2009)

NEW ZEALAND MADE

Contact Us

Specialized Construction Products Ltd

Auckland Branch
79 Porana Rd, Glenfield
Ph: + 64 9 414 4499

Christchurch Branch
178b Carlyle Rd, Sydenham
Ph: + 64 3 365 3202

info@specialized.co.nz
www.specialized.co.nz

Introduction

This specification is for the application of Specialized Construction Products EZpanel Autoclaved Aerated Concrete Panel System. The EZpanel system is made up of 50mm Autoclaved Aerated Concrete Panels that are fixed to timber or steel framing over the surface of a 20mm or a 40mm cavity. The backing substrate is then over coated and reinforced with a range of specially blended proprietary cement- or acrylic-based plasters before the walls are finished with a chosen finishing plaster and painted with a 100% acrylic paint system. EZpanels can also be bonded or mechanically fixed to concrete or masonry walls. (Note: This Application is outside the scope of the BRANZ Appraisal.)

All the PVC flashings, fibreglass mesh, resin, fixings and plaster components used for the EZpanel System must be supplied by Specialized Construction Products Ltd or one of its certified distributors.

EZPanel

LIGHTWEIGHT CONCRETE CLADDING SYSTEM

This specification has been set out as near as possible to the actual construction sequence and it must be read in conjunction with the detail data sheets for the EZpanel System and the EZpanel Installation Guide.

Framing Set Out (Timber or Steel)

Timber framing must comply with NZS 3604 for buildings or parts of buildings within the scope limitations of NZS 3604. Buildings or parts of buildings outside the scope of NZS 3604 must be to a specific design in accordance with NZS 3603 and AS/NZS 1170. In all cases studs must be set out at 600mm maximum centres. Dwangs/nogs must be flush fitted at maximum 800mm centres. All soffit junctions, openings, wall/roof junctions and foundation details must have support for the sheet edges. Timber framing must have a maximum moisture content of 24% at the time cladding commences. For steel framing the minimum framing specification is 'C' section studs and nogs of overall section size 75mm web and 32mm flange. Steel thickness must be a minimum of 0.75mm.

Building Wrap

All external walls of buildings must have barriers to airflow in the form of interior linings with all joints stopped for wind zones up to and including Very High. Unlined gables and walls must incorporate a rigid sheathing or an air barrier which meets the requirements of NZBC Acceptable Solution E2/AS1, Table 23. For attached garages, wall underlays must be selected in accordance with NZBC Acceptable Solution E2/AS1, Paragraph 9.1.3.4. Flexible wall underlay shall be building paper complying with NZBC Acceptable Solution E2/AS1 Table 23, or breather-type membranes covered by a valid BRANZ Appraisal for use as wall underlays. Rigid wall underlay shall be plywood or fibre cement sheet complying with NZBC Acceptable Solution E2/AS1 Table 23, or rigid sheathing covered by a valid BRANZ Appraisal for use as rigid air barrier systems. The selected building underlay and flexible sill and jamb tape system must be installed by the building contractor in accordance with the underlay and tape manufacturer's instructions prior to the installation of the cavity battens and the rest of the EZpanel System. Flexible building underlay must be installed horizontally and be continuous around corners. Underlay must be lapped 75mm minimum at horizontal joints and 150mm minimum over studs at vertical joints. Generic rigid sheathing materials must be installed in accordance with NZBC Acceptable Solution E2/AS1 and be overlaid with a flexible wall under- lay. Proprietary systems shall be installed in accordance with the manufacturer's instructions. Particular attention must be paid to the installation of the building underlay and sill and jamb tapes around window and door openings to ensure a continuous seal is achieved and all exposed wall framing in the opening is protected. Where studs are at greater than 450 mm centres and a flexible wall underlay is being used, a building underlay support must be installed over the underlay at maximum 300mm centres horizontally.

Head Flashings

Proprietary PVC head flashings with minimum ventilation openings of 1000mm2 per lineal metre must be installed over all window heads and door openings. If proprietary PVC head flashings cannot be used, an acceptable alternative flashing must be provided. Please contact Specialized Construction Products Ltd for advice.

Flashings in General

Joists designed to carry decks need to have a continuous flashing fitted before the EZpanel is fixed. Check if there are any special back-flashings required where the EZpanel joins another substrate or curtain wall construction.

Roofing

Where areas over roofs need to be plastered, the roof/wall flashing must be installed prior to the commencement of cladding.

Pipes & Meter Boxes

It is critical that pipes are flashed appropriately in accordance with E2/AS1 fig 68. All pipes must have the building underlay turned to the outside of the building and have the building underlay taped to the outside of the pipe. All pipes must have a downward rake of a minimum of 5° and must be sealed in place using MS Silicone or another approved equivalent both before plastering and after the installation of the base coat. All meter boxes must be correctly flashed in accordance with the detailed drawings for the EZpanel System. Particular attention to detail and workmanship must be given to the weatherproofing details contained in the technical literature relating to flashing and sealing building penetrations or junctions with other building materials. All junctions between the EZpanel substrate and dissimilar materials must be correctly flashed and sealed with MS Silicone or another approved equivalent. The sealant must be installed in strict accordance with the manufacturer's requirements and must be left to properly cure prior to plastering.

Site Storage

Products in dry form must be stored in a dry area, off the floor on a timber pallet or timber dunnage and must be protected from the weather and from mechanical damage. Stock must be rotated to ensure that the oldest material is used first. Plaster stock that is older than six months must be discarded. EPS battens, uPVC flashings and profiles must be protected from direct sunlight and physical damage. They should be stored flat and under cover. Liquid components must be stored in a frost free area.

Preparation of Masonry and Concrete Surfaces

Note: This application is outside the scope of the BRANZ Appraisal.

All surfaces to receive a direct bonded application of the EZpanel System must be clean and free of debris, dirt and dust, efflorescence, grease, oils, curing agents, cleaning solutions, mould and algae or any other contaminants that may affect adhesion. Painted or glossy surfaces must be specially treated prior to the application of any plaster material, please refer to Specialized Construction Products for specialist advice before you proceed. All cracks that may be the subject to ongoing movement must be correctly repaired and reinforced.

EZPanel

LIGHTWEIGHT CONCRETE CLADDING SYSTEM

Some smooth, dense concrete surfaces must be slush coated before the application of the EZpanel bonding plaster to ensure suitable adhesion is created, please refer to Specialized Construction Products for specialist advice before you proceed. Tilt slab and other precast concrete items should be chemically cleaned with a water blaster to ensure any mould release agents are removed before the plaster is applied. All very porous surfaces should be sealed with an appropriate paint sealer prior to the application of the bonding plaster. Failing to correctly prepare the masonry substrate, may affect the aesthetic appearance of the finished wall. Do not wet down masonry surfaces before plastering and do not apply base coat plaster to surfaces that are wet from rain or overnight dew.

EZpanel Battens

20mm Cavity – EZPanel battens for a 20mm cavity installation are manufactured from Ultra High Density (Class UHD) expanded polystyrene with an approximate density of 28kg/m3 and measure 21mm X 50mm.

40mm Cavity – EZpanel battens for a 40mm cavity installation are manufactured from either; (a) Ultra High Density (class UHD) expanded polystyrene with an approximate density of 28kg/m3 measuring 41mm X 50mm and are fixed with glue or 50mm galvanised flat head nails or (b) 40 X 40 X 200 H3.2 timber batten blocks with a minimum slope of 15 degrees on the top edge, fixed with two 75mm galvanised ring shank nails. 40mm polystyrene battens must only be used in situations where the bottom edge of the sheet is fully supported by a rebate in the slab or an appropriate weight bearing lintel.

All battens must be fixed to the framing over the surface of the chosen building underlay in accordance with the batten layout shown in the detail data sheets. Horizontal battens must be a maximum length of 100mm in accordance with the requirements of NZBC Acceptable Solution E2/AS1, Paragraph 9.1.8.2 (f) and must be fixed into place on all nogs/dwangs where required for fixing with a minimum of a 5 degree angle on the top edge. The fewer horizontal battens that are used the better.

Sill and Jamb Flashings

The use of the EZpanel PVC sill and PVC Jamb flashings is MANDATORY. It is also MANDATORY that the sill and jamb flashings are joined in the corner with a Specialized Construction Products EZpanel corner socket.

Soffits, Gable Ends and Unlined Walls

Soffits shall be fixed into place before the cladding is installed and allowance made to close off the cavity with framing or battens to stop airflow into the roof space. After the mesh and plaster system has been completed a 5mm bead of MS sealant or 'no more gaps' should be installed at the soffit EZpanel intersection. In the case of reverse raking soffits a flashing or piece of Protecto EIFS tape shall be provided in accordance with the details shown in the technical literature.

To ensure the EZpanel substrate is not affected by timber shrinkage in areas that are not traditionally lined (e.g. gable ends), it is highly recommended that the internal walls of these areas are adequately braced with a thin sheet of plywood or an alternative bracing material.

Alternatively, the timber in these areas must have a moisture content of no greater than 18% and must remain that way throughout the entire construction process.

Fixing the EZpanel

The panels are butt jointed except at corners where one panel overlaps the other to form a straight finish. The EZpanel must be supported at fixing locations with cavity spacers a maximum of 100mm long in accordance with the requirements of NZBC Acceptable Solution E2/AS1, Paragraph 9.1.8.2(f). Each additional layer of panels must be installed so that the panel joints are staggered by a minimum of 150mm. Anti-corrosion paint must be applied to all exposed reinforcing in the panels.

All panels must have their edges and their ends buttered with Sabre Fix PU glue as they are being installed. The edges of all of the EZpanel panels must be free of all dust and debris (preferably blown down with compressed air) and should be sprayed down with a mist of water immediately before the glue is applied. The glue should be laid in a bead approximately 6-8mm in width before the next panel is laid onto its edge. This practice should be done as quickly as possible to ensure the glue remains as pliable as possible to aid in the adhesion of the panels. Care must be taken when applying the glue to ensure it does not ooze either into the cavity or onto the outside of the dwelling. Once the panels have been joined and screwed into place any glue excess that oozes out of the joints between the panels should be wiped off or cut from the surface before it has fully cured. The glue must be allowed to dry before the application of the mesh coat.

At the base of walls the finished level of the EZpanel must be at least 50mm below the supporting framing. Additional framing maybe required at soffits, internal and external corners and window and door openings for the support and fixing of sheet edges. As edge fixing is not required for Ezpanel control joints can be created off stud and off nog.

Construction joints must be provided as follows:

- Vertical control joints – at maximum 8m centres; aligned with any control joint in the structural framing, or where the system abuts different cladding types.
- Horizontal control joints – at maximum 6m centres and at inter-storey floor levels where unseasoned timber floor joists are used.

Construction joint details are provided in the drawings provided with the system. Inter-storey drained joints must be provided for walls over 2 storeys or maximum 7m in height in accordance with the requirements of NZBC Acceptable Solution E2/AS1, Paragraph .1.4. Inter-storey junctions must be constructed in accordance with the technical literature.

EZPanel

LIGHTWEIGHT CONCRETE CLADDING SYSTEM

The bottom edges of the EZpanel can either be capped with a 50mm High Back U-Channel which is attached to the bottom plate of the dwelling prior application or with a 50mm lipped base bead once they have been fixed into place and trimmed as may be necessary.

Timber Framing

There are five categories listed in NZS 3604: Low, Medium, High, Very High and Extra High. The "Wind Zone" for the job must be clearly understood before the application of any EZpanel.

Fixing over EPS battens

EZpanel panels are fixed through the polystyrene cavity battens and spacers to the studs with 100mm or 120mm long Class 4 galvanised or Grade 302 stainless steel screws that have a head size of 14mm. Typically the screws are placed into the panels 150mm from the outside edge giving overall fixing centres of approximately 300mm. Two screws should be put into each stud per panel. Refer to the table 1 for fixing centres.

Fixing to timber battens

For timber framed buildings, installations in NZS3604 Wind Zones up to, and including, 'Extra High' and specific design wind pressures up to and including design differential 2.5kPa ULS, the timber battens/ blocks must be fixed to the timber framing with two 75mm long galvanised or stainless steel ring-shank nails. The battens are fixed to the studs at maximum 600mm horizontal centres (stud centres), and at maximum 600mm vertical centres (at all horizontal joints between the EZpanel). Additional battens may be required at corners and around openings. The EZpanels are fixed to the battens with 10g x 75mm long, countersunk head Class 4 galvanised screws (Grade 302 Stainless in sea spray zones). The screws must be positioned 50mm minimum from the edge of the panel and the fixing heads should finish 5mm below the surface of the panel. The need to screw off at 200mm centres on bottom plates is not required for timber battens. However, if more fixing is preferred this can easily be achieved by correctly positioning additional timber batten blocks.

Table 1: EZpanel fixing centres through EPS battens

Wind Zone/Wind Pressure	Fixing centres (mm) to studs
Low - Very High NZS 3604 defined Wind Zones with studs at maximum 600 mm centres	300
NZS 3604 Wind Zone Extra High and specifically designed buildings up to design differential 2.5 kPa ULS wind pressure with studs at maximum 600 mm centres	300

1. Fixings to be positioned 150mm in from the panel edge giving an overall fixing layout of 300 mm vertical centres.

Steel Framing

The same fixing centres apply as for timber framing. Use Specialized Construction Products Ltd self-drilling 100mm long AS 3566 Corrosion Class 4 self-drilling screws with a head diameter of 14mm and a shank diameter of 5.1mm in NZS 3604 defined Exposure Zones B, C and D. EPS battens only for steel frame.

Concrete & Masonry

(Note: This application is outside the scope of the BRANZ Appraisal.)

To bond EZpanel to masonry surfaces mix up Specialized Construction Products Fine Mesh Coat plaster with the addition of 1 litre of Specialized Construction Products resin per bag. Cut the EZpanel to size and check the fit. All of the EZpanel to receive a coat of Fine Mesh Coat must be properly sealed prior to the application of the plaster. To seal the panel a mix of 2 parts water to 1 part Specialized Resin must be painted over the surface and allowed to dry before bonding commences. Failing to correctly prepare and seal the aerated concrete substrate may cause delamination or failure in the system. Once sealed apply the Fine Mesh Coat plaster to the back of the sheet with a grooved trowel around the perimeter and in vertical strips every 400mm. If there isn't a rebate in the concrete slab, EZpanel masonry anchors must be used to hold the sheets in place while the plaster is drying and to provide a mechanical fixing.

Sealing the Substrate

The surface of the EZpanels must be properly sealed prior to the application of any plaster. To seal the EZpanels, apply one good coat of undiluted Specialized EZpanel sealer over the entire surface of the dwelling and allow it too completely dry before plastering commences. EZpanel sealer can be applied with a pump up sprayer, long nap roller or wide paint brush at a spread rate of 10-12m2 per litre. Failing to correctly prepare and seal the surface of the aerated concrete panels may cause delamination, chalking or failure in the base coat.

PVC Beads

All exposed corners and bottom edges must be protected by gluing on the appropriate PVC section. The beads are glued on with Sbrefix PS Adhesive.

Stopping Up Prior to Mesh Coating

Once the EZpanels have been correctly fixed, a two metre straight edge should be used to check the flatness of the walls surface. Durarasps should be used to sand off any large irregularities. Deviations and holes in the surface of the EZpanels should be filled with EZstop plaster and screeded flat. Once the surface is flat and true all screw holes and PVC extrusions should be stopped with a layer of Fine Mesh Coat plaster. This will help to ensure any shrinkage in the preceding mesh coat is kept to a minimum. Only once the walls are flat and true and have been well stopped should mesh coating commence.

EZPanel

LIGHTWEIGHT CONCRETE CLADDING SYSTEM

CEMENT PLASTER OPTION (A)

Mesh Coating

The areas around all penetrations should be completed first by using Fine Mesh Coat imbedded in soft flexible 160g/m2 alkali resistant mesh to all reveals. A piece of soft mesh must be used to reinforce the head, sill and jamb flashing onto the surface of the panels and in the corner of any penetration where the sills and jambs meet. Once all penetrations and awkward areas have been completed all the flat areas of wall should be done using a 160g/m2 alkali resistant hard mesh embedded in EZpanel base coat. Drops of hard mesh do not have to overlap, but should be tightly butt joined. If the mesh isn't going to be overlapped any butt join that is created must offset any vertical join in the panels by a minimum of 150mm.

Finishing Options

There are six options once the EZpanel base coat plaster and mesh have been applied:

Option 1: Stucco Texture

Fine base coat plaster can be sprayed through a hopper gun or a sagola gun to achieve a heavy stucco plaster finish.

Option 2: Float Finish

Float Finish is a polymer modified cement based plaster which is polished flat to achieve a fine granular finish. The smooth plaster will not cover up background imperfections, particularly when walls are subject to side lighting at certain times of the day.

Option 3: Spanish Finish

Spanish Finish is a polymer-modified, cement based plaster used to achieve an undulating adobe style finish. This product can be applied in various thicknesses and using a number of different techniques. Before finish coating begins ensure the style of finish that is desired has been correctly communicated and understood by the plasterer. A trial sample is highly recommended.

Option 4: Fine Spray Texture

Spray texture is a granular plaster designed to give a fine stippled appearance. Spray texture is best applied using a sagola gun with a 7mm tip and with the compressor set at approximately 60psi.

Option 5: GranoporTop 1.5mm Acrylic Texture

Ready to use, synthetic resin-based render which is polished flat to achieve a fine granular finish.

Option 6: Granopor Fine 1.0 mm Acrylic Texture

Ready to use, synthetic resin-based render which is polished flat to achieve a fine granular finish or sprayed through a hopper gun or a sagola gun to achieve a fine stippled appearance. Smooth textures will not cover up background imperfections, particularly when walls are subject to side lighting at certain times of the day

ACRYLIC PLASTER OPTION (B)

Powaflex Acrylic System

The areas around all penetrations should completed first using Powaflex imbedded in soft flexible 160g/m2 alkali resistant mesh to all reveals. A piece of soft mesh must be used to reinforce the head flashings, jambs and sills onto the surface of the panels and in the corner of any penetration where the sills and jambs meet. Once all penetrations and awkward areas have been completed all the flat areas of wall should be done using a 160g/m2 alkali resistant hard mesh. Drops of hard mesh do not have to overlap but should be tightly butt joined. If the mesh isn't going to be overlapped any butt join that is created must offset any vertical join in the panels by a minimum of 150mm.

Finishing Options

There are two options once the Powaflex Base Coat as been applied:

Option 1: GranoporTop 1.5mm Acrylic Texture

Ready to use, synthetic resin-based render which is polished flat to achieve a fine granular finish.

Option 2: Granopor Fine 1.0 mm Acrylic Texture

Ready to use, synthetic resin-based render which is polished flat to achieve a fine granular finish or sprayed through a hopper gun or a sagola gun to achieve a fine stippled appearance. Smooth textures will not cover up background imperfections, particularly when walls are subject to side lighting at certain times of the day

Curing

The curing time of finishing plaster will vary due to ambient temperature, relative humidity, surface temperature, surface porosity, application methods, and/or the thickness of the material. All freshly applied material must be protected from inclement weather for a minimum of 24 hours after application. It is the responsibility of the plaster applicator to determine if the product is cured and/or dry prior to applying any additional coats that may be required or exposing the applied product to rain, snow, dew, and/or any other inclement weather condition that may have a detrimental affect. Although some finishes contain cement and will not fully cure for 28 days, as long as it is lightly hosed down with fresh water 12 hours prior to painting, it can be painted after the finish coats have cured for a minimum of 3-4 days.

Painting

One of the following paint systems must be used over the EZpanel finishing plasters to make the system weathertight and give the desired finish colour to exterior walls. Plastershield is a 100% acrylic-based paint that has been specially formulated for use over cement based plasters. Plastered surfaces must be coated with a minimum of 2 coats of Plastershield tinted to the selected colour and applied by brush and roller at a spread rate of approximately 6m2/ litre.

As an alternative to Plastershield, a latex based exterior paint system complying with any of Parts 7, 8, 9 or 10 of AS 3730 may be used. The paint system must be applied in accordance with the paint manufacturer's instructions.
Other paint systems are not covered by this specification sheet and Specialized Construction Products Ltd will not warrant the use or suitability of alternative paint systems over the surface of its plaster finishes.
The chosen paint system must have a Light Reflective Value (LRV) of no less than 25.

EZPanel

LIGHTWEIGHT CONCRETE CLADDING SYSTEM

Limitations

DO NOT apply plaster when the ambient or surface temperature is below 4°C or above 30°C or will be in that range for the 24-hour period after application. When hot, dry, or windy conditions exist, moist curing and protection must be provided. Material that is allowed to freeze or material that dries too quickly may suffer irreparable damage.

DO NOT add any other materials to the plasters used with the system or deviate from the mixing or application procedures outlined in any of Specialized Construction Product's technical data sheets without written approval from Specialized Constructions Products Ltd.

DO NOT apply any plaster material unless the substrate has been properly cleaned and prepared.

DO NOT add any more water than prescribed by the technical data sheet for the individual products.

DO NOT wet the wall prior to the application of any plaster.

DO NOT reactivate any plaster with more water once it has begun to set.

DO NOT mix more plaster than you can use in 45 minutes.

NOTE: Failure to follow the manufacturer's written specifications could result in the following but not limited to spalling, cracking, peeling, chipping, delamination, discoloration, wash off, and overall system failure.

Maintenance

Any paint film damage must be repaired as soon as possible to prevent water penetration and ensure that the high strength properties of the fibreglass mesh are maintained. Any impact damaged areas must be thoroughly cleared of any loose material and repaired with a 1:1 mixture of resin and water mixed with the required amount of EZpanel plaster. This will ensure a positive bond between the original plaster and the repaired area. Repaint within the following week. The wall cladding system should be regularly cleaned, at least annually, by washing with clean water to remove dirt and to maintain the finish appearance. Grime may be removed with warm water and detergent. Plastered walls should be recoated with an approved paint system at 5 to 8 yearly intervals or sooner if required to maintain weather-tightness. Regular checks, at least annually, must be made of the system to ensure that the weather resistant coating is maintained watertight, and that the sealant, flashings, and other joints continue to perform their function and do not allow water to penetrate. Failure to correctly maintain the system may void any long term warranties offered with the system. Any accidental damage to the cladding must be repaired immediately using Specialized Construction Products materials. For further information please refer to Specialized Construction Products plaster maintenance guide.

Warranty

The recommendations, suggestions, statements and technical data provided by Specialized Construction Products Ltd are based on the best current knowledge available and are given for information purposes only without any responsibility for their use. It is expressly understood and agreed that the buyer's sole and exclusive remedy shall be the replacement of defective products, and under no circumstance, shall Specialized Construction Products Ltd be liable for incidental or consequential damages. Specialized Construction Products Ltd neither assumes, nor authorizes, any others to assume for it any liability with respect to furnishing of the product. Handling and use of the products are beyond the control of Specialized Construction Products Ltd; therefore, no warranty is made, expressed or implied, as to the results or on site quality that can be obtained from the use of the product.

The long-term durability of the EZpanel system is dependent upon the correct preparation and application of all of its components in strict accordance with all the relevant written instructions and detail sheets. On-site application is beyond the control of Specialized Construction Products Ltd and it cannot guarantee workmanship or the correct preparation and application of its products or systems. The certified EZpanel contractor shall take the overall responsibility for; on-site supervision, staff training, installation, and quality control.

System Guarantee Period

15 years from date of practical completion to plastering.

Workmanship Guarantee Period

5 years from date of practical completion to plastering.

Technical Assistance

Assistance and information is available by calling Specialized Construction Products Ltd on **(09) 414 4499** or by e-mail at **info@specialized.co.nz.**

Specialized Construction Products Ltd
EZpanel AAC Panel Cladding System

Product Technical Statement: 101753

miproducts
THE NATIONAL PRODUCT DATABASE

Lightweight autoclaved aerated concrete panel and plaster system
View miproducts listing



masterspec partner

Level of assurance needed to demonstrate NZ Building Code Compliance

M
MEDIUM

Supporting documentation should include technical information by manufacturer and either an independent assessment or reference to an industry-based scheme

Specialized Construction Products Ltd confirms that this minimum level of assurance has been met or exceeded by the following:
BRANZ Appraisal
649

Company Contact Details

Company:	Specialized Construction Products Ltd
Physical Address:	79 Porana Road Glenfield NORTH SHORE CITY
Postal Address:	79 Porana Road Glenfield NORTH SHORE CITY
Telephone:	64 09 4144499
Email:	scot@specialized.co.nz
Website:	www.specialized.co.nz

Technical Statement

Product Description

The EZpanel Cavity System is a cavity-based external wall cladding system for residential and light commercial type buildings where domestic construction techniques are used.

The system consists of autoclaved aerated concrete (AAC) panels (EZpanel panels) fixed over high density polystyrene battens to form a 20 or 40 mm cavity, or timber batten ties to form a 40 mm cavity. The backing substrate is then over coated and reinforced with a range of specially blended proprietary cement-or acrylic-based plasters before the walls are finished with a chosen finishing plaster and painted with a 100% acrylic based paint system. EZpanles can also be boned or mechanically fixed to concrete or masonry walls. (Note: This Application is outside the scope of the BRANZ Appraisal.)

EZpanels are reinforced with a high strength wire mesh making them extremely impact resistant. EZpanels are lightweight, will not rot, are pest resistant and have excellent sound insulation properties.

Specialized's EZpanel System is guaranteed for 15-years from the date of practical completion.

Scope of use

The EZpanel Cavity System is suitable as an external cladding system:

- within the scope limitations of NZBC E2/AS1, Paragraph 1.1; and
- with a risk score of 0-20, calculated in accordance with E2/AS1, Table 2; and
- in NZS 3604 Wind Zones up to and including "Extra High".

The EZpanel Cavity System is also suitable for weathertightness and structural wind loading when used for timber and steel framed buildings subject to specific design up to a design differential ULS wind pressure of 2.5 kPa.

The EZpanel Cavity System must only be installed on vertical surfaces (except for tops of parapets, sills and balustrades, which must have a minimum 10° slope and be waterproofed in accordance with the Technical Literature).

Joinery must meet the requirements of NZS 4211 for the relevant Building Wind Zone or be specifically designed for use in specifically designed buildings.

New Zealand Building Code (NZBC)

The product will, if employed in accordance with the supplier's installation and maintenance requirements, assist with meeting the following provisions of the building code:

- **Clause B1 Structure:** Performance B1.3.1, B1.3.2, B1.3.3, B1.3.4
- **Clause B2 Durability:** Performance B2.3.1(b), B2.3.1(c), B2.3.2
- **Clause E2 External moisture:** Performance E2.3.2
- **Clause F2 Hazardous building materials:** Performance F2.3.1

Notes

B1.3.3 The EZpanel Cavity System meets the requirements for loads arising from (a) self-weight, (f) earthquake, (h) wind, (j) impact loads likely to be encountered in normal residential use, and (q) time dependent effects including creep and shrinkage.

B2.3.1(b) 15 years for the cladding system and plaster finish and (c) 5 years for the exterior paint system

Supporting Evidence

The product has and can make available the following additional evidence to support the above statements:

BRANZ Appraisal
649

Specialized Construction Products Ltd
EZpanel AAC Panel Cladding System

Product Technical Statement: 101753

Product Criteria

Design requirements

- Timber framing must comply with NZS 3604 for buildings or parts of buildings within the scope limitations of NZS 3604. Buildings or parts of buildings outside the scope of NZS 3604 must be to a specific design in accordance with NZS 3603 and AS/NZS 1170.
- For steel framing the minimum framing specification is 'C' section studs and nogs of overall section size 75mm web and 32mm flange. Steel thickness must be a minimum of 0.75mm
- All external walls of buildings must have barriers to airflow in the form of interior linings with all joints stopped for wind zones up to and including Very High. Unlined gables and walls must incorporate a rigid sheathing or an air barrier which meets the requirements of NZBC Acceptable Solution E2/AS1, Table 23.

See the EZpanel Specification document for full design requirements

Installation requirements

Installation of components and accessories supplied by Specialized Construction Products Ltd, its certified distributors and certified plasterers must be carried out only by Specialized Construction Products Ltd certified plasterers.

See the EZpanel specification document for full installation requirements

Maintenance requirements

Regular maintenance is essential to ensure the performance requirements of the NZBC are continually met and to ensure the maximum serviceability of the system. Regular cleaning (at least annually) of the paint coating is required to remove grime, dirt and organic growth and to maximise the life and appearance of the coating. Grime may be removed by brushing with a soft brush, warm water and detergent.

Paint systems must be recoated at approximately 5-8 yearly intervals in accordance with the paint manufacturer's instructions. Annual inspections must be made to ensure that all aspects of the cladding system, including the coating system, plasters, flashings and any sealed joints remain in a weatherproof condition. Any cracks, damaged areas or areas showing signs of deterioration which could allow water ingress must be repaired immediately. The EZpanel Cavity System must be repaired in accordance with the instructions of Specialized Construction Products Ltd.

Company Product Information

Environmental

AAC's high resource efficiency gives it low environmental impact in all phases of its life cycle, from processing of raw materials to the disposal of AAC waste on site during construction. In the manufacturing process, no pollutants or toxic by-products are produced.

Relationships

New Zealand Made

Videos

EZpanel video

Date last validated: **05 September 2018**

Date last updated: **05 September 2018**

Disclaimer: The Product Technical Statement (PTS) template is copyright to Construction Information Limited. However the content of this PTS is the responsibility of the product manufacturer/supplier. Refer to the miproducts Terms and Conditions

4323G Gerard Steel Tile Roofing

Gerard Roofs
+64 0800 100244
customerservice@gerardroofs.co.nz
https://gerardroofs.co.nz/

SUPPORTING DOCUMENTS

Gerard Aspen Pressed Steel Roofing 111702

Ref 25384. Uploaded 18 May 2021

Purpose: Installation, Maintenance, Environmental, Warranty

Gerard Roofs Specification Manual

Ref 19676. Uploaded 28 Jan 2021

Purpose: Performance, Installation, Maintenance

Roof Care and Maintenance Guide

Ref 19589. Uploaded 27 Jan 2021

Purpose: Maintenance

Gerard Aspen Pressed Steel Roofing

Product Technical Statement: 111702

miproducts
THE NATIONAL PRODUCT DATABASE

Inspired by stone slate roofs to gives a sleek look of sophistication
View miproducts listing

masterspec partner

Level of assurance needed to demonstrate NZ Building Code Compliance

H
HIGH

Supporting documentation should include technical information by manufacturer and either a BRANZ or independent Appraisal or CodeMark

Gerard confirms that this minimum level of assurance has been met or exceeded by the following:
New Zealand Metal Roofing Manufacturers Association
MRM

Company Contact Details

GERARD

Company: Gerard Roofs

Physical Address: 90-104 Felton Mathew Avenue
St Johns
AUCKLAND

Postal Address: PO Box 18071
Glen Innes
AUCKLAND

Email: customerservice@gerardroofs.co.nz

Website: https://gerardroofs.co.nz/

Technical Statement

Product Description

Gerard *Aspen* has a simplicity that works with both contemporary and traditional architecture, giving a roof a continuous smooth pattern that can present a flat, almost seamless appearance when seen in soft light like on a cloudy day.

Key features

- Aluminium-zinc steel substrate, made to AS 1397, compliant with NZS 4217 Pressed Metal Tile Roofs.
- Non-combustible - compliant with AS/NZS 1530.3.
- Available in textured finish comprising natural stone-chip coating.
- Available in 19 smooth colours, and 10 textured colours.
- Warranty up to 50 years.

Other performance attributes

- Long lasting in any environment.
- Horizontal fixing system and overlapping, interlocking tile design provides strength, resilience and weather performance when subjected to horizontal wind and seismic forces.
- Lightweight, with a high strength-to-weight ratio.

Scope of use

Gerard Alpine is suitable for use on buildings that comply with NZS 3604.

Code-compliant for the following environmental conditions:

Wind Zone - **Specific Design**

Corrosion Zone - **Corrosion Zone D**

Seismic Zone - **High**

Compatible with Angle trim.

New Zealand Building Code (NZBC)

The product will, if employed in accordance with the supplier's installation and maintenance requirements, assist with meeting the following provisions of the building code:

- **Clause B1 Structure:** Performance B1.3.1, B1.3.2, B1.3.3, B1.3.3(a), B1.3.3(b), B1.3.3(c), B1.3.3(d), B1.3.3(e), B1.3.3(f), B1.3.3(g), B1.3.3(h), B1.3.3(i), B1.3.3(j), B1.3.3(k), B1.3.3(l), B1.3.3(m), B1.3.3(n), B1.3.3(o), B1.3.3(p), B1.3.3(q), B1.3.3(r), B1.3.4, B1.3.4(a), B1.3.4(b), B1.3.4(c), B1.3.4(d), B1.3.4(e), B1.3.5, B1.3.6, B1.3.6(a), B1.3.6(b), B1.3.7, B1.3.7(a), B1.3.7(b), B1.3.7(c)
- **Clause B2 Durability:** Performance B2.3.1, B2.3.1(a), B2.3.1(b), B2.3.1(c), B2.3.2, B2.3.2(a), B2.3.2(b)
- **Clause E1 Surface water:** Performance E1.3.1, E1.3.2, E1.3.3, E1.3.3(a), E1.3.3(b), E1.3.3(c), E1.3.3(d), E1.3.3(e), E1.3.3(f)
- **Clause E2 External moisture:** Performance E2.3.1, E2.3.2, E2.3.3, E2.3.4, E2.3.5, E2.3.6, E2.3.7, E2.3.7(a), E2.3.7(b), E2.3.7(c)

Notes

Statement of Building Code compliance

The system if designed, used, installed and maintained in accordance with supporting technical information and additional conditions and limitations will meet the following provisions of the New Zealand Building Code:

- B1 Structure
- B2 Durability
- E1 Surface Water
- E2 External Moisture

Gerard Aspen Pressed Steel Roofing

Product Technical Statement: 111702

*Visit the Gerard Roofs Specification Document Library for all product assurance and technical notes.

Evidence

The product meets the requirements set out in the following documents, or relevant parts of cited standards within the documents:

Visit the Gerard Roofs Document Library to access the following:

Test reports

- Gerard Roofs - Acoustic Test Reports 7071, 72, 73 (University of Canterbury)

Product assurance

- Product Technical Statement (Statement of Building Code compliance B1, B2, E1, E2)
- ISO 9001 Certification (2017)
- ISO 14001 Certification

Technical notes

- Aluminimum Zinc substrate performance
- Batten sizes for non-Cyclonic regions
- E2 external moisture Light resistance & total solar absorption values
- Pipe flashings
- Protection of tile substrate through Gerard Roofs coating
- Severe marine environments
- Sound attenuation of roof claddings and systems
- Valley design
- Wind action resistance
- High Wind Zone environments - Specific Design

Supporting Evidence

The product has and can make available the following additional evidence to support the above statements:

New Zealand Metal Roofing Manufacturers Association
MRM

Product Criteria

Design requirements

Compatible with Gerard Angle trim.

*For more detail please visit Document Library within the Gerard Roofs specification website.

Installation requirements

- Minimum roof pitch 15 degrees.
- System is Code-compliant on the condition it is installed by a licensed applicator / installer.
- Rafters and valley boards are to be correctly installed by the builder before roofing can start (refer to the Builders' Checklist).

*For more detail please visit the Document Library within the Gerard Roofs specification website.

Maintenance requirements

If alterations are made to the home after the installation of the roof - such as fitting of chimneys, extension, installation of skylights etc - it is important to ensure that the materials that are used are compatible with the roofing material.

It is recommended to chemically clean the roof before growths are seen as a preventative maintenance measure.

*For more detail please visit the Document Library within the Gerard Roofs specification website.

Warrantees

Gerard Roofs Warranty

- Up to 50 years - Standard residential environments (more than 750m from breaking surf)
- Up to 25 years - Severely corrosive environments (750m or less from breaking surf)

*For full Warranty details please visit the Document Library within the Gerard Roofs specification website.

Company Product Information

Environmental

ISO 14001.

Recycled and recyclable materials.

Gerard Aspen Pressed Steel Roofing

Product Technical Statement: 111702

miproducts
THE NATIONAL PRODUCT DATABASE

Feature in one of New Zealand's first "Homestar 10" rated homes.

Quality Assurance

ISO 9001 (Quality Management)

Relationships

Member of New Zealand Green Building Council

New Zealand Made

Date last validated: **18 May 2021**

Date last updated: **18 May 2021**

Disclaimer: The Product Technical Statement (PTS) template is copyright to Construction Information Limited. However the content of this PTS is the responsibility of the product manufacturer/supplier. Refer to the miproducts Terms and Conditions

GERARD
Roofing Designed to Endure



New Zealand specification manual

Roofing Designed to Endure

Contents

Gerard Roofs specification manual

New Zealand's steel roofing system

1.1 Products 5
1.1.1. Gerard Roof profiles 5
Gerard Stratos 6
Gerard Senator 6
Gerard Rockport 7
Gerard Alpine 7
Gerard Oberon 8
Gerard Heritage 8
Gerard Milano 9
Gerard Classic 9
1.1.2. Trims 10
1.2 Finishes 11
1.2.1 Textured finishes 11
1.2.2 Smooth finishes 11
1.2.3 Custom finishes to order 11
1.3 Colours & finishes 12
2.8 1.3.1 Textured finish colours 12
1.3.2 Types of finish by roof profile 12
1.3.3 Smooth finish colours 13
1.4 Product warranty 14
1.5 Environmental responsibility 15
1.6 CAD details available 15
1.7 Handling and storage 15
1.8 Product identification 15

2.0 Design considerations

2.1 Scope 18
2.2 Building code 18
2.3 Serviceable life 18
2.4 Other information sources 19
2.5 Alternatives 19
2.6 Materials 19
2.6.1 Panels and accessory materials 19
2.6.2 Installation materials 19
2.7 General information 20
2.7.1. Dissimilar metals/materials 20
Limitations on use 20
2.8.1. Corrosive environments 20

3.0 Substrate & installation overview

3.1 Preparation of structure 22
3.1.1 Rafters and valley boards 22
3.2 Battens 22
4.6 3.2.1 Batten setout 22
3.2.2 Batten/rafter fastening 23
3.3 Roofing underlay 23
3.4 Valleys 23
3.5 Solar brackets 23
3.6 Panel installation 23
3.6 Panel installation continued 24

4.0 Standard roof details

4.1 Batten spacing – Eave 26
4.2 Ridge installation 26
4.3 Valleys 28
4.4 Hips 30
4.4.1 Installation of roof trim on hip junction with wooden battens 30
4.5 Barge/Gable ends 31
4.5.1 Installation of roof trim over a wooden fascia with batten 31
4.5.2 Installation of roof trim over a metal fascia with and without batten 31
Wall flashings 32
4.6.1 Side flashings 32
4.6.2 Step - Pitch flashings 32
4.6.3 Soft edge apron flashings 33
4.7 Wall Stop Ends 33
4.8 Change in pitch 34
4.9 Penetrations 35
4.9.1 Pipes 35
4.9.2 Chimneys 35
4.9.3 Roof windows 35
4.9.4 Solar panels 35
4.10 Extra high wind zone installation 36

5.0 Components & fixing patterns

5.1 Gerard Roofs components 38
5.2 Gerard Stratos installation 40
5.3 Gerard Senator installation 41
5.4 Gerard Rockport installation 42
5.5 Gerard Alpine installation 43
5.6 Gerard Oberon installation 44
5.7 Gerard Heritage installation 45
5.8 Gerard Milano installation 46
5.9 Gerard Classic installation 47

New Zealand’s ingenious pressed steel roofing system

A Gerard roof is made up of individual lightweight pressed steel panels secured using a unique fixing system that effectively locks them together to form a single structural unit. The result is a roof that’s stylish, copes with severe weather and lasts a very long time.

Invented in New Zealand …

In 1957 New Zealand innovator Lou Fisher saw an opportunity to create a new kind of roof.

Disappointed with the limitations of solid tile and the utilitarian look of long-run corrugated iron roofs, he invented the steel tile roof and established a trusted brand that would grow to become Gerard Roofs.

… proven all over the world

The company continues to lead through ongoing product development and relentless attention to quality standards. Over the years Gerard Roofs' products have been fine-tuned to endure in all living situations and are now used in over 120 countries.

The Gerard roof you put over your head has not only been proven throughout New Zealand, but in some of the most extreme climates and environments on the planet

1.1 Products

1.1.1. Gerard Roof profiles

The roof has profound effect on the look of most homes

An attractive roof is a significant architectural feature. The roof usually accounts for around a third of the overall visual appearance of a home and will have a noticeable influence on its style and street appeal.

Gerard Roofs’ profiles complement a range of styles

For many people, choosing a roof is primarily about looks. Homes are a reflection of individuality and their roofs a prominent feature. Unlike most other roofing types Gerard offers a system of choices that enables you to determine the right ‘look’ rather than having to accept a pre-defined one.

Applicable to traditional or contemporary architecture

Whether you’re imagining traditional style or something following the latest trends, Gerard Roofs have profiles to meet the brief. Milano, for example, is reminiscent of the enduring ridged roofs of the Mediterranean; by contrast, a profile like Rockport offers a slimmer, squarer more contemporary pattern.


Gerard Rockport


Gerard Classic


Gerard Stratos


Gerard Milano


Gerard Senator


Gerard Oberon


Gerard Alpine


Gerard Heritage

Gerard Stratos

Combining a flat plane with continuous but irregular grooves gives Gerard Stratos a recurring but slightly organic pattern that works with many styles of home.

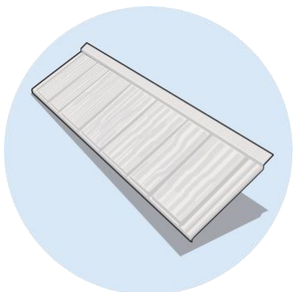



Pitch – min./max.	15-90°
Overall length	1320 mm
Length of cover	1250 mm
Width of cover	370 mm
Upstand	27 mm
Roof cover/panel	0.46 m^2
Panels/m^2	2.2
Weight/panel Textured	3.0 kg
Weight/panel Smooth	2.1 kg
Weight/m^2 Textured	6.6 kg
Weight/m^2 Smooth	4.7 kg

Gerard Stratos is compatible with all three Gerard trims – **Barrel, Angle** and **Box**.

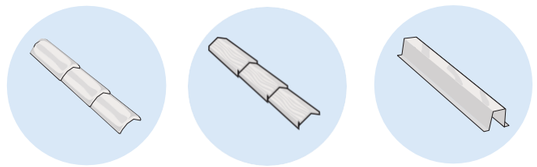

Gerard Senator

A profile with a modern look and subtle raised detailing. Senator is known for the simplicity and uniformity it brings to contemporary and traditional homes.

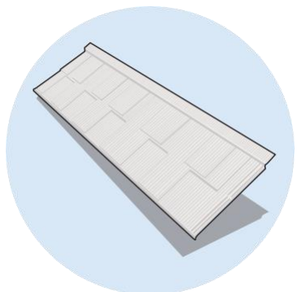



Pitch – min./max.	15-90°
Overall length	1320 mm
Length of cover	1250 mm
Width of cover	368 mm
Upstand	16 mm
Roof cover/panel	0.46 m2
Panels/m^2	2.2
Weight/panel Textured	3.0 kg
Weight/panel Smooth	NA
Weight/m^2 Textured	6.6 kg
Weight/m^2 Smooth	NA

Gerard Senator is compatible with **Angle** trim.

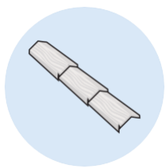

Dimensions and weights given are nominal.

Gerard Rockport

Among Gerard's flattest profiles, Rockport lends your roof a sleek, linear look and is often used on clean, simple architecture with a modern bias.

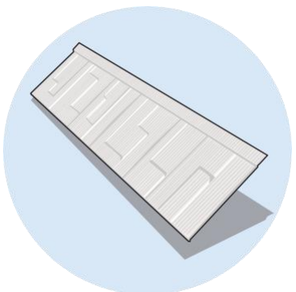



Pitch – min./max.	15-90°
Overall length	1330 mm
Length of cover	1250 mm
Width of cover	368 mm
Upstand	20 mm
Roof cover/panel	0.46 m^2
Panels/m^2	2.2
Weight/panel Textured	3.0 kg
Weight/panel Smooth	NA
Weight/m^2 Textured	6.6 kg
Weight/m^2 Smooth	NA

Gerard Rockport is compatible with **Angle** trim.

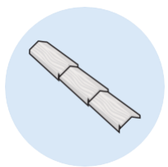

Gerard Alpine

Inspired by the look of Welsh slate the Gerard Alpine profile lends a smooth, sleek linear look while surface detailing adds a slightly rustic overtone.

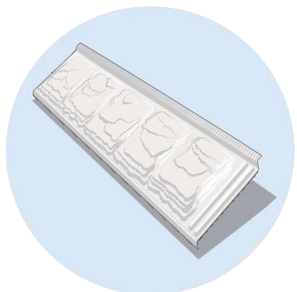



Pitch – min./max.	15-90°
Overall length	1335 mm
Length of cover	1260 mm
Width of cover	368 mm
Upstand	17 mm
Roof cover/panel	0.46 m^2
Panels/m^2	2.2
Weight/panel Textured	2.9 kg
Weight/panel Smooth	NA
Weight/m^2 Textured	6.4 kg
Weight/m^2 Smooth	NA

Gerard Alpine is compatible with **Angle** trim.

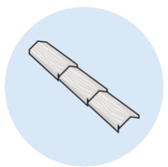

Dimensions and weights given are nominal.

Gerard Oberon

The depth and dimension of Oberon make it most responsive to changes in light. It is often seen on substantial homes alongside dressed stone and natural timbers.

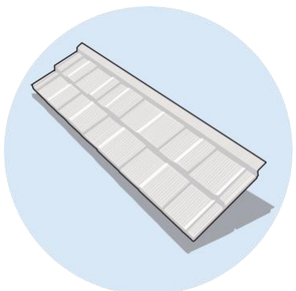



Pitch – min./max.	20-90°
Overall length	1310 mm
Length of cover	1230 mm
Width of cover	320 mm
Upstand	20 mm
Roof cover/panel	0.39 m²
Panels/m²	2.54
Weight/panel Textured	2.8 kg
Weight/panel Smooth	NA
Weight/m² Textured	7.1 kg
Weight/m² Smooth	NA

Gerard Oberon is compatible with **Angle** trim.

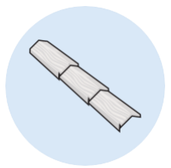

Gerard Heritage

The scalloped shapes of this profile bring a look that's similar to heavyweight tiles. The advantages of pressed steel mean this profile is often chosen as a substitute.

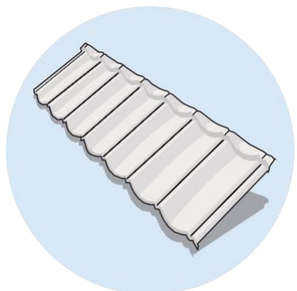



Pitch – min./max.	12-90°
Overall length	1330 mm
Length of cover	1257 mm
Width of cover	369 mm
Upstand	28 mm
Roof cover/panel	0.46 m²
Panels/m²	2.2
Weight/panel Textured	2.9 kg
Weight/panel Smooth	2.1 kg
Weight/m² Textured	6.4 kg
Weight/m² Smooth	4.7 kg

Gerard Heritage is compatible with all three Gerard trims – **Barrel, Angle** and **Box**.

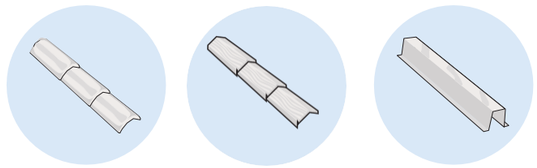

Dimensions and weights given are nominal.

Products and specifications

Gerard Milano

With balanced arches and flats found in traditional design, Gerard Milano is a timeless profile that creates clean, elegant and classical looking roofs.

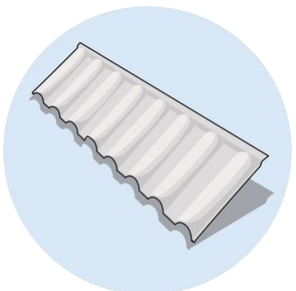



Pitch – min./max.	12-90°
Overall length	1330 mm
Length of cover	1215 mm
Width of cover	368 mm
Upstand	24 mm
Roof cover/panel	0.45 m²
Panels/m²	2.2
Weight/panel Textured	2.9 kg
Weight/panel Smooth	NA
Weight/m² Textured	6.4 kg
Weight/m² Smooth	NA

Gerard Milano is compatible with **Barrel** and **Angle** trims.

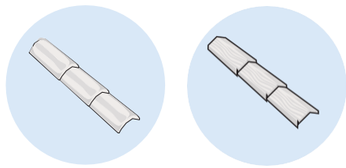

Gerard Classic

Gerard Classic is a geometric profile with shapes and angles that accentuate light and shadow to emphasise its corrugations and create a look of strength and definition.

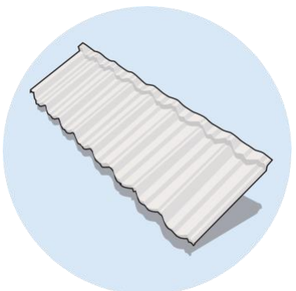



Pitch – min /max.	12-90°
Overall length	1320 mm
Length of cover	1257 mm
Width of cover	369 mm
Upstand	28 mm
Roof cover/panel	0.46 m²
Panels/m²	2.2
Weight/panel Textured	2.9 kg
Weight/panel Smooth	2.1 kg
Weight/m² Textured	6.4 kg
Weight/m² Smooth	4.7 kg

Gerard Classic is compatible with all three Gerard trims – **Barrel, Angle** and **Box**.

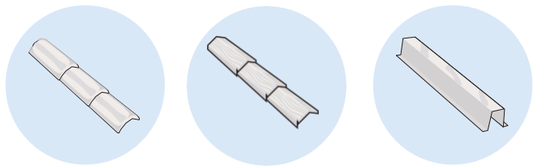

Dimensions and weights given are nominal.

1.1.2. Trims

Gerard Roof trims

Trim is an essential roofing element, for performance as well as appearance; roof trims create a weatherproof seal at roof junctions and are an important part of the integrity of the roofing system.

There are three types of roof trim – Angle, Barrel and Box. Each roof profile is compatible with one or more of these as shown in the chart on the right.

Gerard's roof trim component system is designed to be fully integrated. The finish of Gerard trims can be chosen to exactly match the finish of a Gerard roof or chosen in a contrasting colour to create a specific effect.

	Angle trim	Barrel trim	Box trim
Stratos	✓	✓	✓
Senator	✓		
Rockport	✓		
Alpine	✓		
Oberon	✓		
Heritage	✓	✓	✓
Milano	✓	✓	
Classic	✓	✓	✓

Gerard Roof Profiles With Corresponding Trims



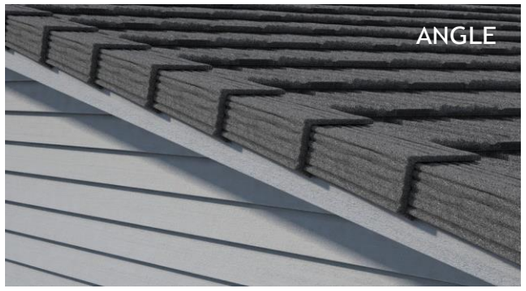



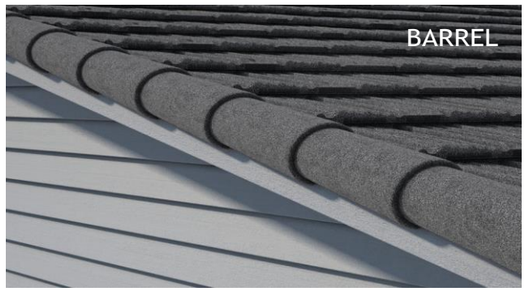



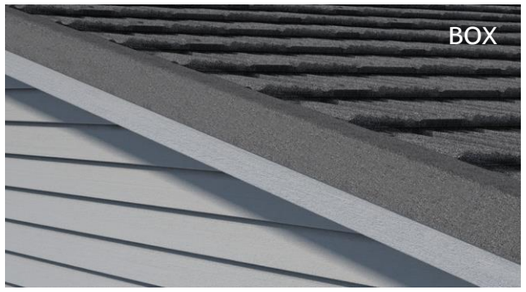

1.2 Finishes

Choice of surface finishes

Some Gerard roof profiles allow you to choose either a textured or Smooth finish on the surface of your roof.
Both have their merits and both come in a range of contemporary colours. The decision is usually influenced most by the architectural style of the home and the intended colour scheme.

1.2.1 Textured finishes

Naturally coloured mineral fragments, or ceramic coated stone fragments, fused to aluminium-zinc steel in layers of acrylic resin and over-glaze.

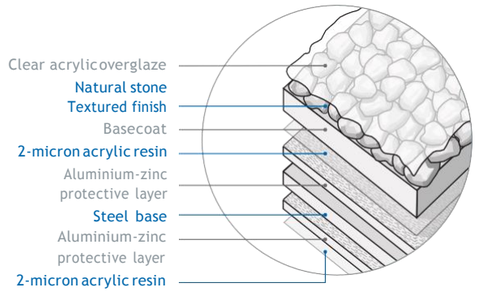

Textured finish advantages:

- Additional protection from the elements
- Natural stone colours are almost entirely fade-free
- Gerard textured finishes have longer warranty

A textured stone finish is inclined to look a little more substantial yet visually softer than a Smooth finish.

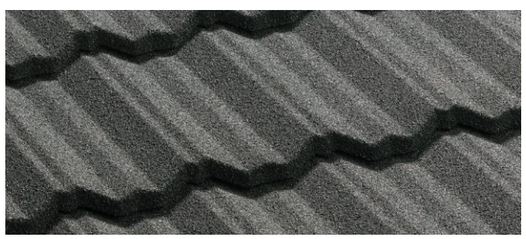

1.2.2 Smooth finishes

45-micron thick topcoat of ultra-tough polymer acrylic applied after the shape has been pressed into the aluminium-zinc steel (preventing surface micro-cracks).

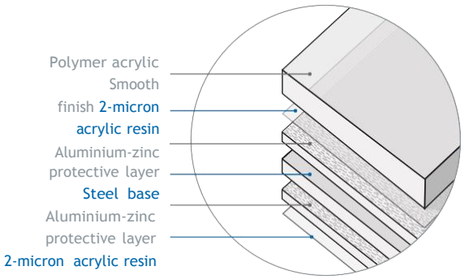

Smooth finish advantages:

- Less expensive than a textured finish
- Smooth surface with clearer detail
- Just like ordinary coloured steel but much more durable

Smooth finishes tend to produce a smoother, crisper look accentuating patterns and details more.

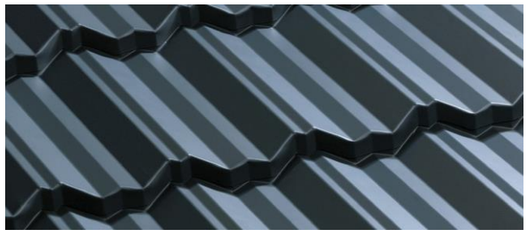

1.2.3 Custom finishes to order

Custom finishes can be created for special projects by request.

A Gerard Smooth finish can be made to match any colour sample. We also have the ability to develop a custom textured finish – for example, we could work with stone that's native to your location.

To find out more contact Gerard Roofs on 0800 100 244.

1.3 Colours & finishes

1.3.1 Textured finish colours



Midnight

Black / Ebony



Charcoal

Black / Ebony

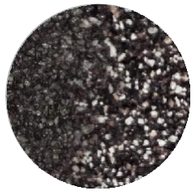

Eclipse

Black / Ebony



Onyx

Greyfriars / Greyfriars



Ashwood

Sandstone Grey / Sandstone Grey



Rainforest

Karaka / Karaka

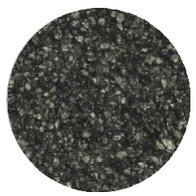

Greenstone

Karaka or River Gum / Karaka



Ravine

Karaka / Karaka



Teak

Lignite / Lignite



Pepper

Ironsand / Ironsand



Terracotta

Scoria / Scoria

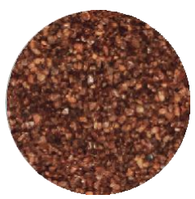

Cedar

Lignite or Scoria / Lignite

1.3.2 Types of finish by roof profile

Textured finishes and colours are available for all Gerard roof profiles.



Gerard Alpine

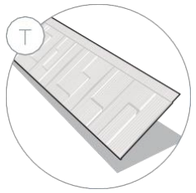

Gerard Rockport

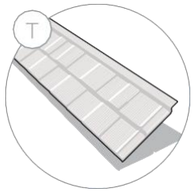

Gerard Oberon

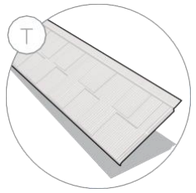

Gerard Senator

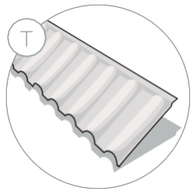

Gerard Milano

The name below each colour swatch title is the Colorcote® / Colorsteel® equivalent.
These are useful for matching accessories like fascia or aluminium joinery
as the names are often referred to as a colour standard.

Smooth finishes and colours are available for the three Gerard profiles shown below.



Gerard Classic



Gerard Stratos

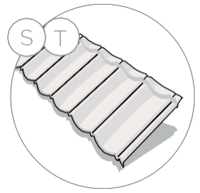

Gerard Heritage

1.3.3 Smooth finish colours

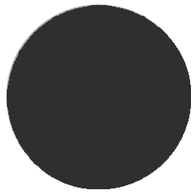

Obsidian

Black / Ebony

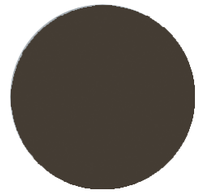

Graphite

Ironsand / Ironsand

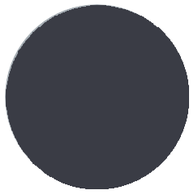

Castle Grey

Windsor Grey / Windsor Grey

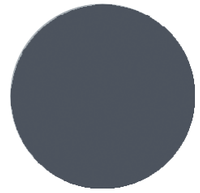

Ocean Blue

New Denim Blue / New Denim Blue

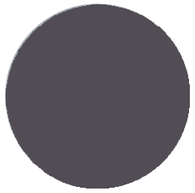

Smoke Grey

Greyfriars / Greyfriars

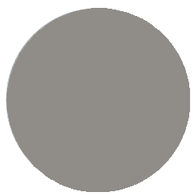

Pearl Grey

Sandstone Grey / Sandstone Grey



Chalk

Cloud / Pacific Cloud

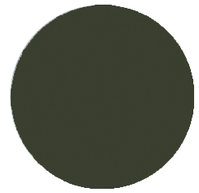

Dark Green

Karaka / Karaka

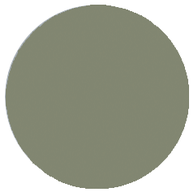

Mint Green

Mist Green / Mist Green

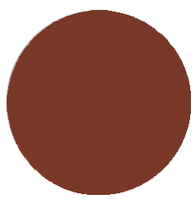

Russet

Scoria / Scoria

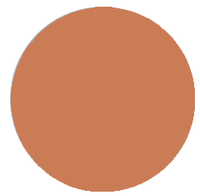

Marseille Clay

Terracotta / Terracotta

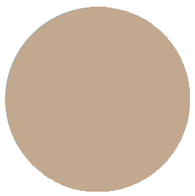

Morocco

Beige / *No equivalent*

The name below each colour swatch title is the Colorcote® / Colorsteel®equivalent.
These are useful for matching accessories like fascia or aluminium joinery
as the names are often referred to as a colour standard.

1.4 Product warranty

Gerard's warranty addresses homeowners' two main concerns:

1. That the roof remains weatherproof
2. That the coating remains sound

Complicated rules simplified

Warranties are complex but we've narrowed the variables affecting Gerard Roofs' warranty cover down to two questions:

Is the building sited in a corrosive environment?

Does the roof have a Smooth or a textured finish?

On the right is a chart showing the terms of the warranty according to the circumstances of the individual building.

In each situation the warranty is pro-rata with cover diminishing over time.

There are two warranty environment zones: Standard and Corrosive. Warranty cover is longer in the standard environment zone.

A Corrosive Environment is defined as anywhere within 750m of breaking surf.

Gerard Roofs' warranty applies to all Gerard manufactured products, even if installed in extreme corrosive conditions.

Installation is assured

Be reassured that Gerard roofs are only installed by Gerard Certified Roofers.

Each GCR is responsible under law to make good any problems in the unlikely event they arise.

Visit www.gerardroofs.co.nz to download a sample of the full warranty document.

The chart shows the duration of both aspects of roof cover, according to the type of texture and the corrosiveness of the environment.

		
Weatherproofing		
Weatherproofing cover with textured finish roof	50 years pro-rata	25 years pro-rata
Weatherproofing cover with Smooth finish roof	50 years pro-rata	15 years pro-rata
Surface coating		
Textured Coating cover	20 years pro-rata	10 years pro-rata
Smooth Coating cover	15 years pro-rata	5 years pro-rata

1.5 Environmental responsibility

A Gerard pressed steel roof is an environmentally responsible choice.

Pressed steel roofing generates minimal manufacturing, construction site and demolition waste.

A pressed steel roof is lighter than its concrete or clay equivalent, which means transportation is more energy-efficient. It requires less framing support, which also saves resources. Steel is endlessly recyclable too.

Gerard Roofs is conscious of its environmental footprint and was New Zealand's first roofing manufacturer to be awarded ISO 14001 environmental accreditation.

TELARC REGISTERED™
Environment
ISO 14001

1.6 CAD details available

CAD details for commonly encountered roof details in a number of common formats can be found at www.gerardroofs.co.nz/designtech

At the time of publication these details cover:

- Eaves
- Gables
- Ridges
- Roof-to-wall (transverse)
- Hips
- Roof-to-wall (parallel)
- Valleys

Gerard Roofs' CAD library is an expanding online resource that will be added to periodically as new details become available.
Check www.gerardroofs.co.nz/designtech to see the latest available versions.

Specific details for unusual or challenging areas can be requested by contacting Gerard Roofs on 0800 100 244.

1.7 Handling and storage

Gerard panels and accessories must be transported and handled with care to avoid damaging the pre-finished surfaces.

Long term storage of panels and accessories must be under dry, ventilated cover. For short term storage on site, panels and accessories must be stored flat off the ground, no more than two pallets high.

Handling and storage of all materials supplied by Gerard Roofs, whether on or off site, is under the control of the Gerard Certified Roofer.

Other materials must be handled and stored in accordance with the relevant manufacturer's instructions.

1.8 Product identification

Gerard Roofs print a run number, date and time of production on the reverse side of each panel. Pallets have pallet cards that show the run number, date of production and colour code markings; this allows identification of batch colours.

The steel supplier also prints a code which allows identification of the parent coil.



Reverse side of the panel.

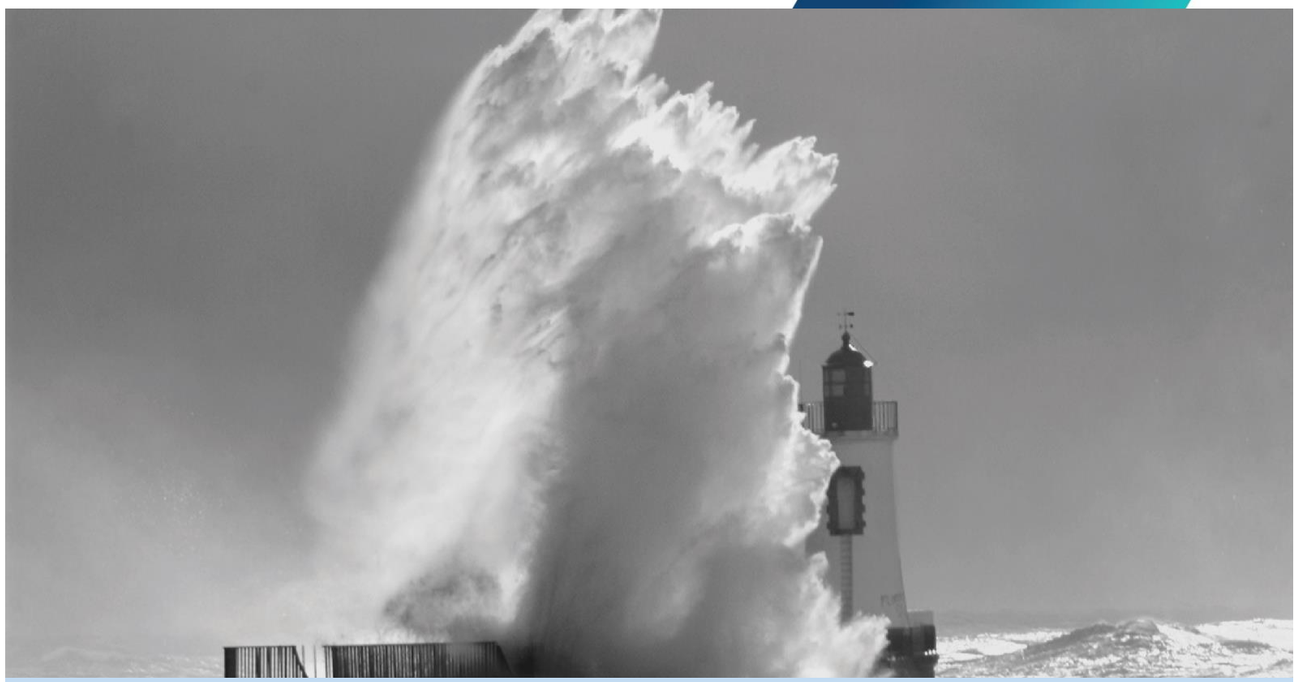

2.0 Design considerations

This section contains general information you need to keep in mind when designing buildings with Gerard Roofs. The numbered sections (2.1; 2.2; etc.) correspond to the equivalent parts of the Gerard Roofs website specification area (www.gerardroofs.co.nz/designtech). Any details and diagrams can be downloaded from there.

2.1 Scope

This specification covers the supply and fixing of:

- Materials
- General information
- Limitations of use
- Service of life
- Workmanship - pre-roofing requirements
- Timber battens.
- Roofing underlay
- Valleys
- Gerard Roofs - pressed metal tiles/panels
- Trim, standard, barrel and angle
- Wall flashings
- Fixings/fasteners
- Incompatible materials
- Extra high wind zone variations
- Solar panels

2.2 Building code

The following standard specifications should be adhered to in both materials and workmanship.

NZS 2295	Roofing underlays
NZS 4217	Standard for pressed metal tile roofs
NZS 3604:2011	Code of practice for light timber framed buildings, not requiring specific design
AS/NZS 4680	Hot-dip galvanized (zinc) coatings on fabricated ferrous articles - galvanising of nails
E2/AS1	New Zealand Building Code clause E2 External moisture
AS1397:2011	AS 1397-2011 continuous hot-dip metallic coated steel sheet and strip - coatings of zinc and zinc alloyed with aluminium and magnesium.
AS/NZS 1530	pt. 3:1999. Fire standard

NZ Building Code sections B1,B2,E2, G12

2.3 Serviceable life

Durability (B2)

Without recoating, the Gerard Roofs products will meet the provisions of NZBC B2.3(C) for 15 years, when used and maintained.

Structure (B1)

When installed according to the manufacturers recommendations the Gerard Roofs products will allow provisions of NZBC B1.3.1, B1.3.2 and B1.3.4 to be met for the relevant provisions of B1.3.3.

External moisture (E2)

When correctly used and installed, the Gerard products meet the requirements of the NZ Building Code E2/AS1

Live loads

During installation and subsequent construction process or maintenance, walking load must be positioned to the front of the panel where the panel is supported by a batten.

Wind zones

On new roofs when fixed to battens sized and installed according to NZS 3604:2011 Gerard Roofs systems are suitable for use in all NZS 3604:2011 building wind zones up to and including extra high.

Spread of fire (C3)

The coating of the roof is <1mm thickness and applied directly to a non-combustible substrate. There was no spread of flames when tested to AS/NZ 1530.pt3.

Water supplies (G12)

Rainwater collected from the Gerard Roofs systems will meet the provisions of NZBC G12.3.1, providing the surface coating is maintained as directed.

It is recommended that a potable water collection system is not installed until 3 good rainfalls have washed the new roof surface free of building debris and surface coating surfactants.

Snow

The Gerard Roofs products are suitable for use where buildings are designed for a 1kPa snow loading.

2.4 Other information sources

NZ MRM Code of Practice.

2.5 Alternatives

No alternatives or substitutions permitted.

2.6 Materials

2.6.1 Panels and accessory materials

The roofing panels and accessories are made by Gerard Roofs.

The base material is aluminium-zinc coated steel - 0.39 mm, AZ150 of AS1397:2011.

Panels are finished in either a granulated textured or Smooth paint finish.

Submissions

An actual product sample should be sighted to confirm colour choice before material orders are placed/accepted.

2.6.2 Installation materials

1. Roofing underlay shall be either a bitumen impregnated Kraft or synthetic underlay. Kraft underlays are covered by NZS2295 while synthetic roofing underlays are approved by Acceptable Solution documentation from the suppliers.
2. Battens of rough sawn radiata pine type timber meeting suitable dimensions (table 02, page 22) with H1.2 protection.
3. Ridge, hip, gable and wall flashings shall be supplied as standard products from Gerard Roofs.
4. Valleys may be used as supplied pre-finished in 2.4 metre lengths by Gerard Roofs or made to order out of pre-painted 0.55 mm G300 AZ150 aluminium-zinc coated steel in a matching colour from a sheet metal fabricator. If made to order, valleys should have similar dimensions to those supplied by Gerard Roofs.
5. Valleys must be painted to the same colour as the roof panel if not pre-finished.
6. Hip end caps to be installed where necessary to stop ingress of moisture or bird-life.
7. All nails in panels should be 50 mm galvanised and coated to meet AS/NZS 4680 specification (Zn 390 g/m^2). Galvanised nails are used for ridge hip caps 30 mm, all other trim or flashings 50 mm.

2.7 General information

Profile	Minimum pitch
Stratos	15°
Senator	15°
Rockport	15°
Alpine	15°
Oberon	20°
Heritage	12°
Milano	12°
Classic	12°

Minimum Roof Pitches For Gerard Roof Profiles

For full specifications - refer to individual panel profile data (pages 6-9) dimensions, coverage, weights etc.

2.7.1. Dissimilar metals/materials

When two different metals are in contact and moisture is present, one metal is relatively protected while the other suffers accelerated corrosion. A similar effect often occurs with water flowing over different metals.

This form of corrosion is commonly found:

- Where water is discharged from copper or brass systems over a galvanised or aluminium-zinc coated steel roof.
- Where unpainted lead flashings are applied directly to aluminium-zinc coated steel products.
- Where fasteners are incompatible with the roofing material.
- Any electrical contact between dissimilar metals should be avoided, e.g. wet leaves making contact between copper gutters and aluminium-zinc coated steel roof panels.

Note: Special consideration should be given when replacing existing roofs as some roof claddings use unsuitable materials for flashing such as lead.

2.8 Limitations on use

2.8.1. Corrosive environments

The Gerard system must not be used in high alkaline environments (such as intensive animal shelters or other buildings with high ammonia concentrations); contact with fresh concrete or plaster must be avoided. The roofing must not be used in contact with permanently damp materials, nor on or near industrial buildings in which corrosive processes occur, nor over swimming pools.

Directing water-flow to minimise potential corrosion

More active metals → **More noble metals**

Zinc › Aluminium-Zinc Coated Steel › Aluminium › Steel › Lead › Copper › Stainless Steel

This chart lists commonly used metals in a 'Galvanic Series'. If any two of these metals are in damp contact or a run-off situation, the metal further to the left will sacrifice itself to protect the metal further to the right. Therefore the simple rule to remember is that you can run water from left to right, but not from right to left. For example zinc to copper is alright, but copper to zinc is not. Specific advice should be sought from Gerard Roofs regarding use of dissimilar metals.



3.0 Substrate & installation overview

Information for the design and specification of the sub-structure of a Gerard roof; rafters, battens, underlays and fixings are covered in detail. The numbered points (3.1; 3.2; etc.) correspond to the equivalent parts of the Gerard Roofs website specification area (www.gerardroofs.co.nz/designtech). Any details and diagrams can be downloaded from there.

3.1 Preparation of structure

3.1.1 Rafters and valley boards

Rafters and valley boards are to be correctly installed by the builder before roofing can start.

Refer to Gerard Roofs Technical Note - Builder Check List, on the Gerard Roofs website.

Where an exact number of complete panel courses is not possible, the top row of panels should be trimmed to fit and then bent up beneath the ridge flashing.

3.2 Battens

Select batten size to suit rafter or truss spacing. Battens are to be treated to H1.2 and graded on site.

Truss spacing (mm)	Batten size (mm)	Situation
900	40 x 50	Standard
1200	50 x 50	Occasional
1500	50 x 65 on edge	Unusual
1800	50 x 75 on edge	Unusual

Table 02 Batten/Spacing

3.2.1 Batten setout

Stratos, Heritage, Classic, Milano, Rockport and Alpine profiles

A row of battens fixed directly behind the fascia with the second batten 330mm up the truss. Subsequent battens are spaced at 370mm (or as specified for profile and coating finish). The final, top row of panels is 365mm or less, depending on whether the top row needs cutting due to rafter length.

Senator

A row of battens fixed directly behind the fascia with the second batten 330mm up the truss. Subsequent battens are spaced at 368mm. A centre support batten (40x50 mm) positioned 185 mm behind the front face of the panel batten is installed and held in place with a single batten nail. Panels are not fastened to this support batten. The final top row of panels should be 365mm or less, depending on whether the top row needs cutting due to rafter length.

NB. The second batten up from the facia is left out to allow the roofing underlay to maintain an angle above horizontal.

Oberon

A row of battens fixed directly behind the facia with the second batten 280 mm up the truss. Subsequent battens are spaced at 160mm. The final top row of panels is 155mm or less, depending on whether the top row needs cutting due to rafter length. Panels are not fastened to intermediate support battens.

NB. The second batten up from the facia is left out to allow the roofing underlay to maintain an angle above horizontal.

Eaves panels at gutter fascia

Panels should extend into the gutter by 40mm. This may vary slightly depending on the rafter length and roof pitch.

Roof profile	Batten spacing	
	Textured	*Smooth*
Stratos	370mm	371mm
Senator*	368mm	
Rockport	368mm	
Alpine	368mm	
Oberonˆ	320mm	
Heritage	369mm	370mm
Milano	368mm	
Classic	369mm	370mm

Table 03 Batten Set-Out

**Centre batten 185 mm, second batten from eave not installed*
ˆCentre batten 160 mm, second batten from eave not installed

3.2.2 Batten/rafter fastening

Gerard Roofs require that all 40 x 50 mm battens fastened to rafters at 900 mm centres are to be fastened with 2 x 90 mm gun nails in all wind zones up to and including the very high wind zone.

In extra high wind zones a screw fastener must be used for all batten rafter junctions.

This meets or exceeds the requirements of NZS3604:2011

Wind zone	900 rafter 50x40 mm	1200 rafter 50x50 mm
Low 32m/s	S	S
Medium 37m/s	S	S
High 44m/s	S	T
Very high 50m/s	S	T
Extra high 55m/s	T	T
SED +55m/s*	Contact GR	Contact GR

Table 04 Fasteners for Panel Battens -Wind Zones – NZS3604.

S = 2 x 90 mm x 3.15 mm nails (0.8kN)
T = 80 mm x 10g screw (2.4kN)

**In SED Specific design situations refer to Gerard Roofs Technical Notes on installation in SED wind areas.*

3.3 Roofing underlay

Must comply with standard NZS 2295 - Pliable and Permeable Building Underlays. Roofing underlay is installed under the battens but over the bottom batten.

Roofing underlay should be installed horizontally with a minimum overlap of 75 mm.

All vertical laps to be taken past rafters and lap by a minimum of 150 mm.

The Roofing underlay is self-supporting up to 1200 mm and does not need mesh.

3.4 Valleys

Valley trays should be made from 0.55 mm AZ150 coated steel. Typically the steel will be pre-painted. Install valleys in a weatherproof workmanlike manner. Do not fix through valleys. Where more than one valley length is used in one run, have an overlap of at least 150mm. Tag valleys at the top edge of the valley join to eliminate valley creep.

3.5 Solar brackets

Gerard Roofs have proprietary solar brackets which can be installed at the time of roofing or later. These brackets do not require holes to be cut into the surface of the panels offering complete weather security.

Refer to Gerard Roofs for more information.

3.6 Panel installation

Care must be taken when handling, cutting, bending and installing to avoid damage to the surface. In particular, the paint finish must be kept clean.

Use rubber soled work shoes during installation and protective/synthetic padding on bending equipment.

Where work is still to be carried out on upper storey dormer windows or walls, panels can be left off to avoid damage or fallout from paint or plaster coatings. Alternatively, a plank embedded into 3 sand bags along its length can be used on top of the panel, with the sand bags placed over the support batten near the nose of the panel.

Where work is progressing above installed panels, dust sheets must be used held down with sand bags.

3.6 Panel installation continued

Heritage, Classic and Milano

Heritage, Classic and Milano can be installed to a minimum of 12° and may be laid left to right or right to left. All laps to be the same way on each plane.

Stratos

Stratos can be installed to a minimum of 15° and may be laid left to right or right to left. The laps must be laid facing away from prevailing winds or line of vision. All laps should be the same way on each plane. Courses must be staggered in a random pattern to avoid patterning as you progress up a hip, or gable.

Senator, Alpine and Rockport

Senator, Alpine and Rockport can be installed to a minimum of 15°. These profiles may only be laid in a single direction, as follows:

- Senator and Alpine – left to right only
- Rockport – right to left only

Courses of all three should be laid in a random pattern, with staggered start points.

Senator should be installed with an intermediate batten at 185mm to support roof traffic.

Oberon

Oberon can be installed at a minimum of 20° and should be laid right to left. Reference can be made to the individual profile fixing pattern pages at the back of this specification manual. Courses must be staggered in a random pattern for Oberon, to avoid patterning as you progress up a hip or gable.

Eaves

At eaves, the front rows of panels are fixed to the battens alongside the fascia by driving nails through the top face into the eave batten. These nails are positioned at points of low water run off. Eaves nails for Smooth finish have a synthetic washer installed under the nail head, eaves nails on textured finishes are sealed with the touch up kit basecoat and chip.

Nailing panels

Successive rows of panels are fixed by driving 50mm nails through the centre of the panel nose into the face of the battens. These nails are spaced as shown/ described in the individual profile fixing pattern pages at the back of this specification manual.

Only Gerard Roofs approved nails should be used in the installation of panels and accessories.

Valleys

Panels are cut at the same angle as the valley, at appropriate points, and bent down into the valley; they must not touch the valley tray. At the ridge, panels are cut and bent up under ridge accessories.

Ridge, Hip, Gable and Wall flashings

Only factory produced flashings and trim as supplied by Gerard Roofs may be installed. Panels are turned up by a minimum of 40 mm and covered by Gerard Roofs accessories to the prescribed coverage. Special flashings can be formed and coated to order.

Wall roof lower junctions

Gerard roofs have proprietary PVC stop end flashings that direct roof/wall run off water into the rain water gutter system.

Membrane areas

If flat membrane areas such as Butynol overlap onto product surfaces, these can be painted with the touch up kit or base coated and granite textured.

Weather sealing

Proprietary or custom made rubber or metal flashings require neutral-cure silicone or MS sealants acceptable to Gerard Roofs to be used for weather-sealing services penetrating the roof. Sealant shall be applied between the flashing and panel surface and mechanical fasteners (rivets, Tek screws) installed to permanently fix the flashing in place.

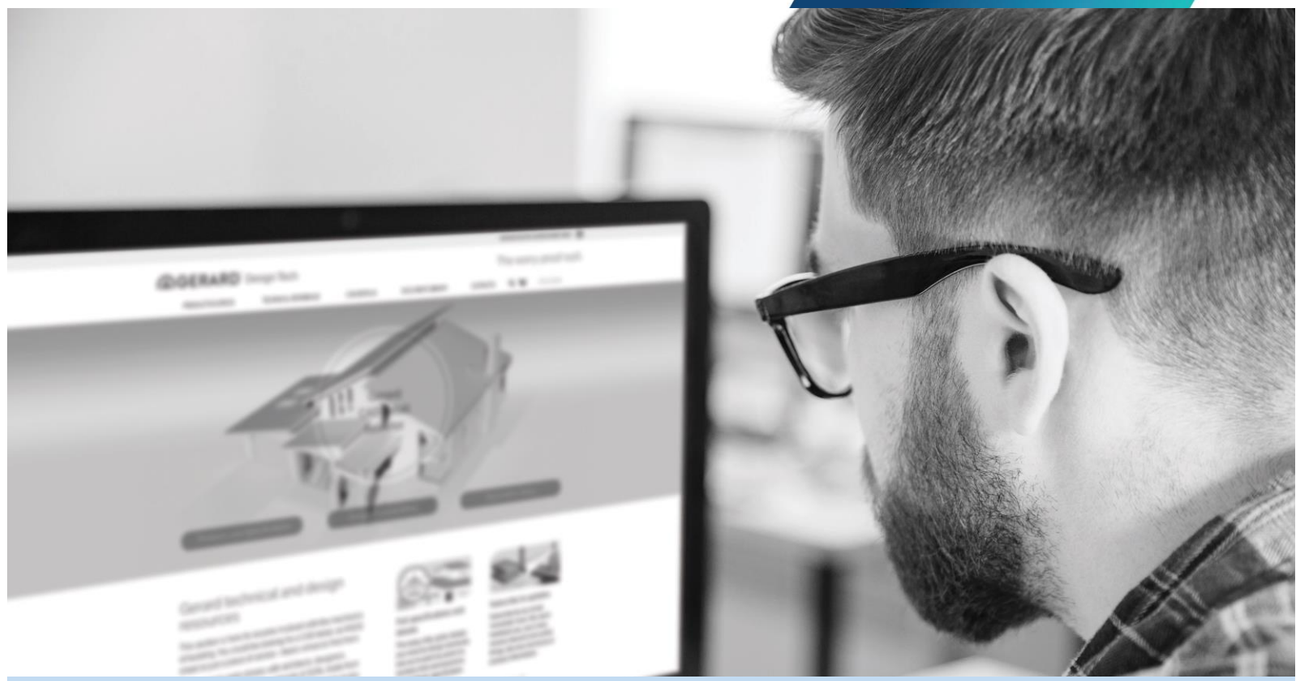

4.0 Standard roof details

This section contains the common junction details and information you need to design and specify buildings with Gerard Roofs. The numbered sections (4.1; 4.2; etc.) correspond to the equivalent parts of the Gerard Roofs website specification area (www.gerardroofs.co.nz/designtech). Any details and diagrams can be downloaded from there.

4.1 Batten spacing – Eave

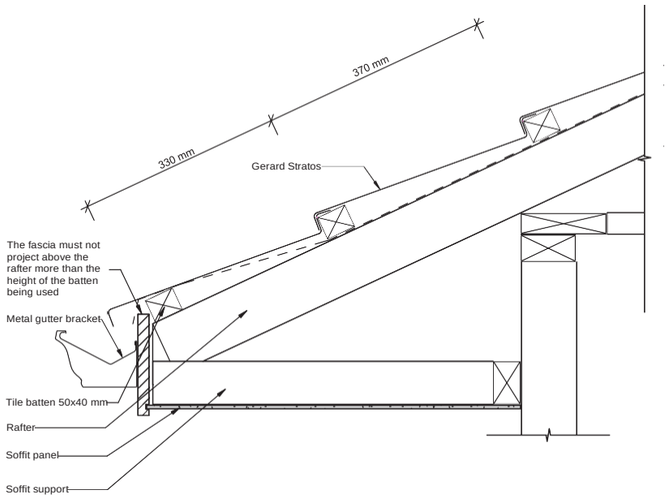

Fig 001 - Gerard Eave

4.2 Ridge installation

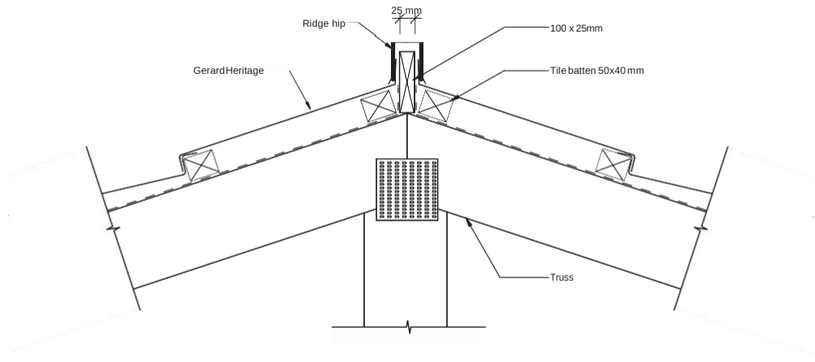

Fig 002 - Gerard Box Trim Ridge Board/Batten - Truss

4.0 Standard roof details

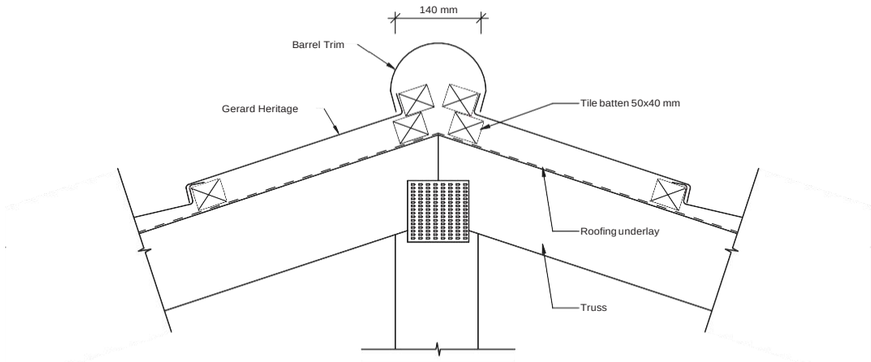

Fig 003 - Gerard Barrel Trim Ridge Board/Batten - Truss

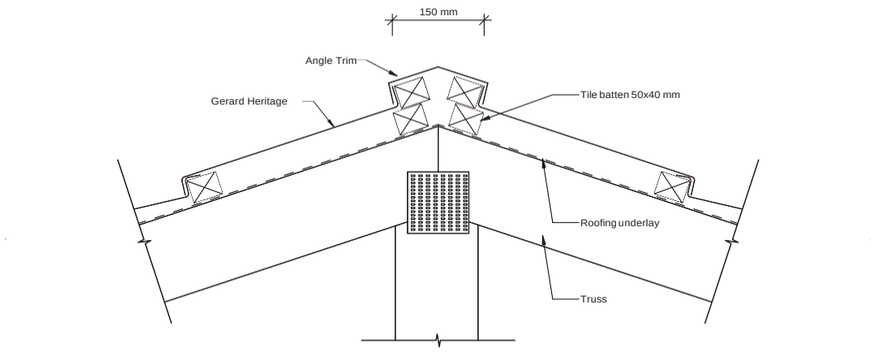

Fig 004 - Gerard Angle Trim Ridge Board/Batten - Truss

4.3 Valleys

Gerard Roofs provide valley trays in two widths, a 160mm Combination Valley and a 250mm E2 Wide Valley for use where required by specification.

Valleys must be supported by valley boards; these should be installed with nogging where necessary.

The nogging should have at least 25 mm clearance beyond where the valley sits so battens have sufficient support and nailing width.

Panels above valleys should be turned down to within 5 mm of the valley tray but must not touch the tray.

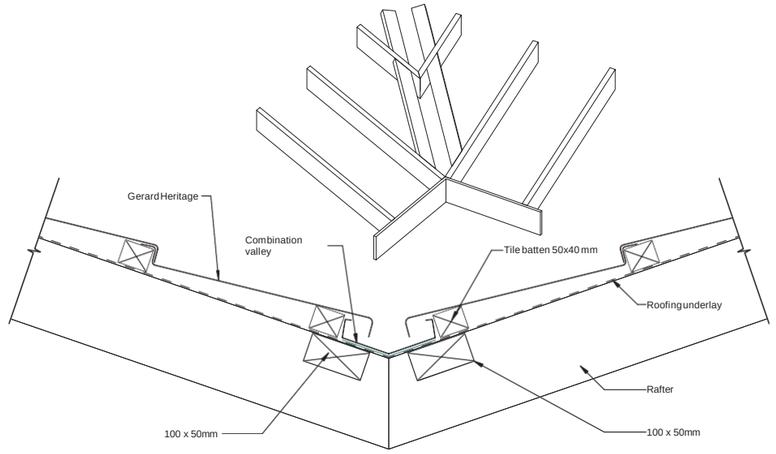

Fig 005 - Gerard Combination Valley

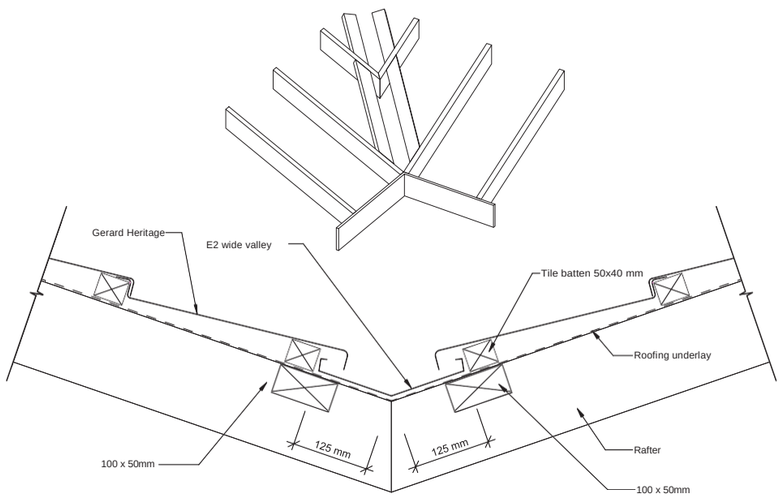

Fig 006 - Gerard E2 Wide Valley

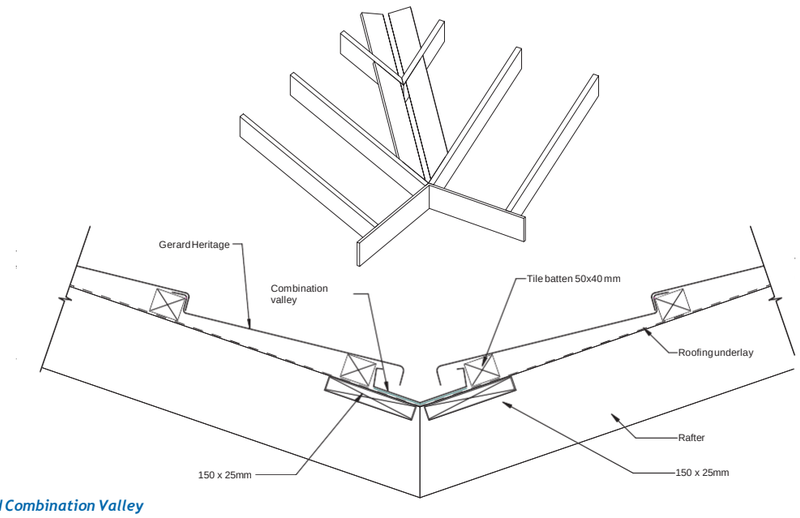

Fig 007 - Gerard Combination Valley

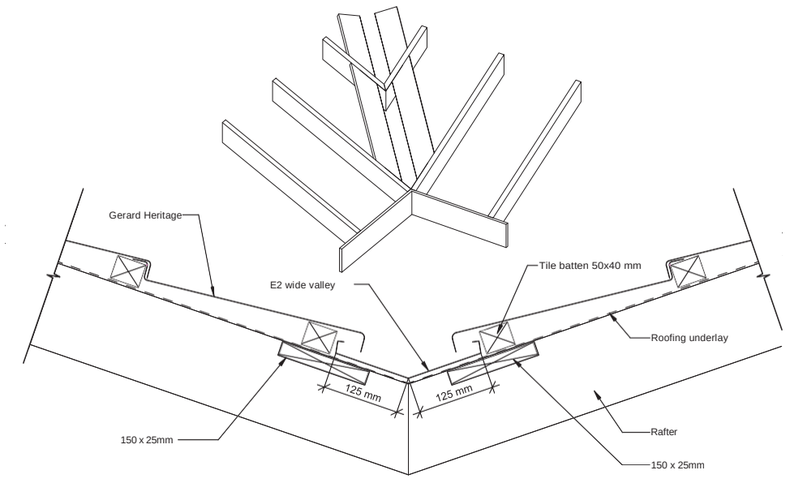

Fig 008 - Gerard Valley - E2 Wide Valley

4.4 Hips

4.4.1 Installation of roof trim on hip junction with wooden battens

Roof panels that butt up to hip battens should be turned up by 40 mm; roof trims must cover battens and overlap panels below by a minimum of 35 mm.

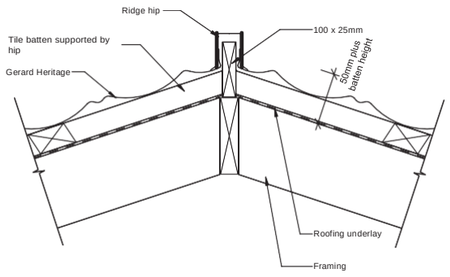

Fig 009 - Gerard Heritage Hip - Box Trim

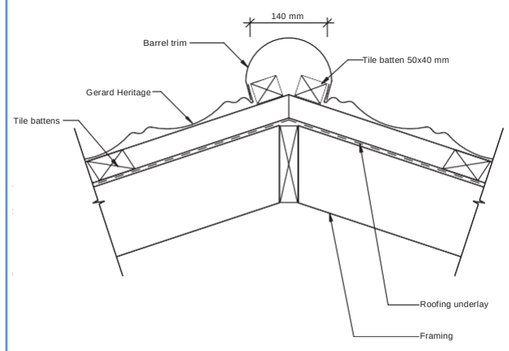

Fig 010 - Gerard Heritage Hip - Barrel Trim

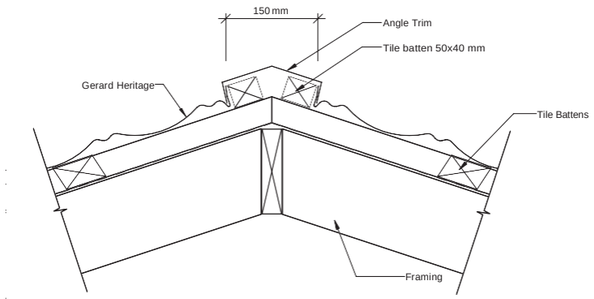

Fig 011 - Gerard Heritage Hip - Angle Trim

4.5 Barge/Gable ends

4.5.1 Installation of roof trim over a wooden fascia with batten

Roof panels that butt up to edge battens should be turned up by 40 mm; roof trims must cover battens and overlap panels below by a minimum of 25 mm.

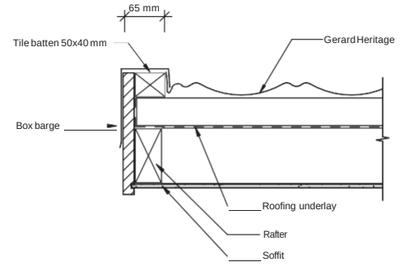

Fig 012 - Gerard Heritage Gable End - Box Barge

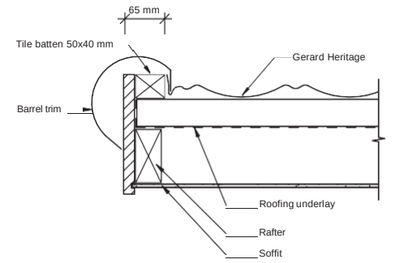

Fig 013 - Gerard Heritage Gable End - Barrel Trim

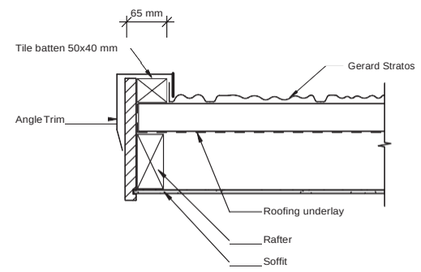

Fig 014 - Gerard Stratos Gable End - Angle Trim

4.5.2 Installation of roof trim over a metal fascia with and without batten

Roof panels that butt up to edge battens should be turned up by 40 mm; roof trims must cover battens and overlap panels below by a minimum of 25 mm.

Roof trims should be riveted to the metal facia.

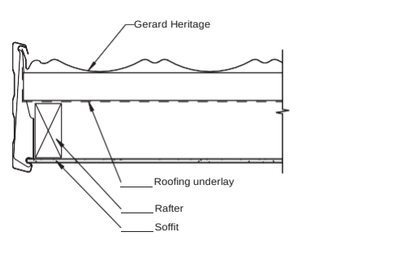

Fig 015 - Gerard Heritage Fascia - Box Trim

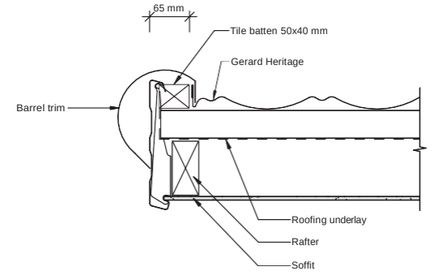

Fig 016 - Gerard Heritage Fascia - Barrel Trim

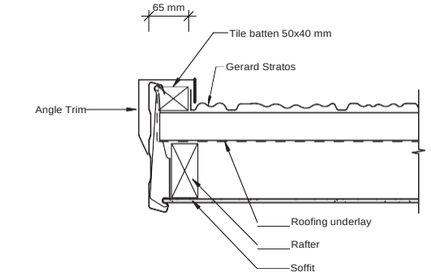

Fig 017 - Gerard Stratos Fascia - Angle Trim

4.6 Wall flashings

There are several types of wall flashings that may be used with various thicknesses of wall claddings.

Gerard Roofs manufacture most of these without hooks or hems which then requires 100 mm coverage of the section hidden behind the wall cladding.

4.6.1 Side flashings

Side flashings are general purpose flashings suitable for use with most wall claddings.

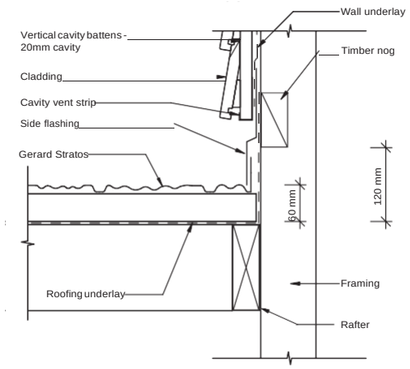

Fig 018 - Gerard Stratos Wall Parallel - Side Flashing

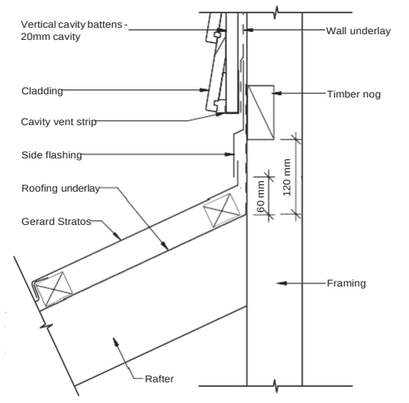

Fig 019 - Gerard Wall Transverse - Side Flashing

4.6.2 Step - Pitch flashings

Pitch flashings are a special system for thicker wall claddings like brick veneer. The transverse wall flashing is folded to closely match the roof pitch allowing the corner junctions to mitre neatly.

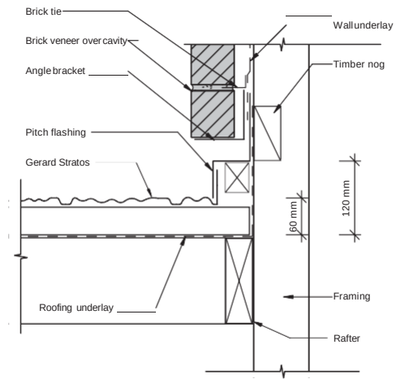

Fig 020 - Gerard Stratos Wall Parallel - Pitch Flashing

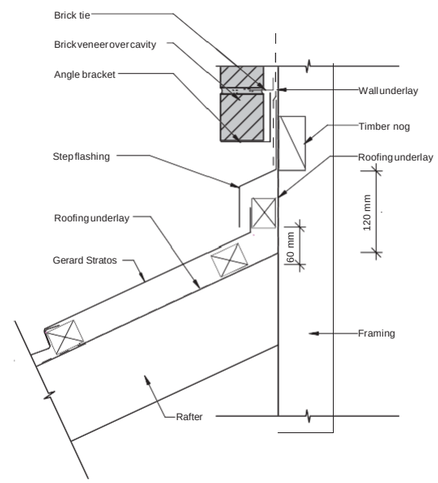

Fig 021 - Gerard Wall Transverse - Step Flashing

4.6.3 Soft edge apron flashings

Soft edge apron flashings are general purpose flashings suitable for most wall claddings. The soft edged aluminium is moulded down to meet the surface of the panel.

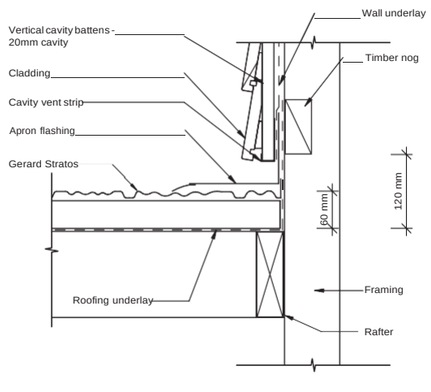

Fig 022 - Gerard Stratos Wall Parallel - Apron Flashing

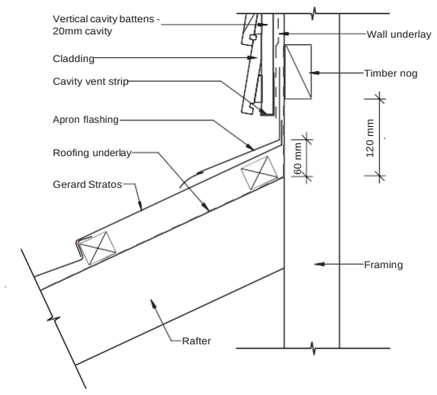

Fig 023 - Gerard Transverse - Apron Flashing

4.7 Wall Stop Ends

Gerard Roofs proprietary PVC Stop Ends direct water away from the roof and wall and into the rain water collection gutters. There are left and right versions.

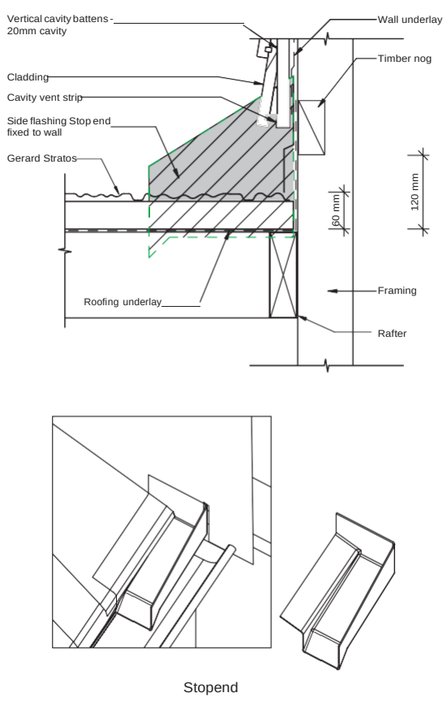

Fig 024 - Gerard Wall Parallel - Stop End Wall

4.8 Change in pitch

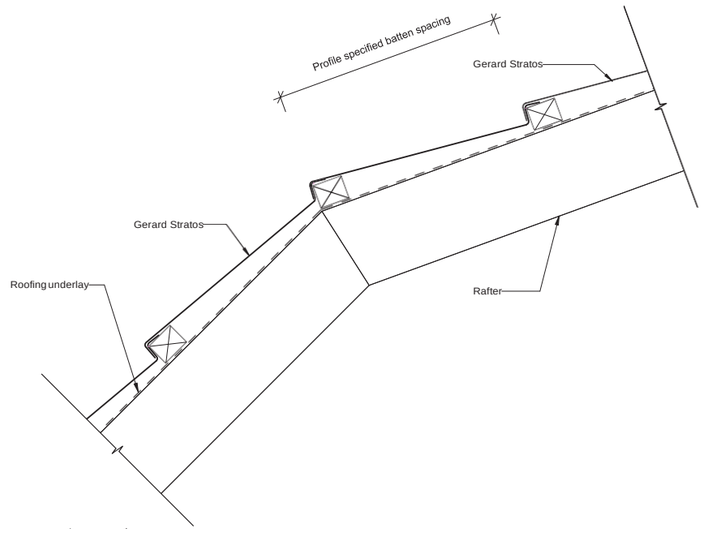

Fig 025 - Gerard Change in Pitch - Low Pitch to High Pitch
A batten is located at the point where the roof line changes pitch. If an exact number of courses of full panels is not practical a panel may be bent to suit.

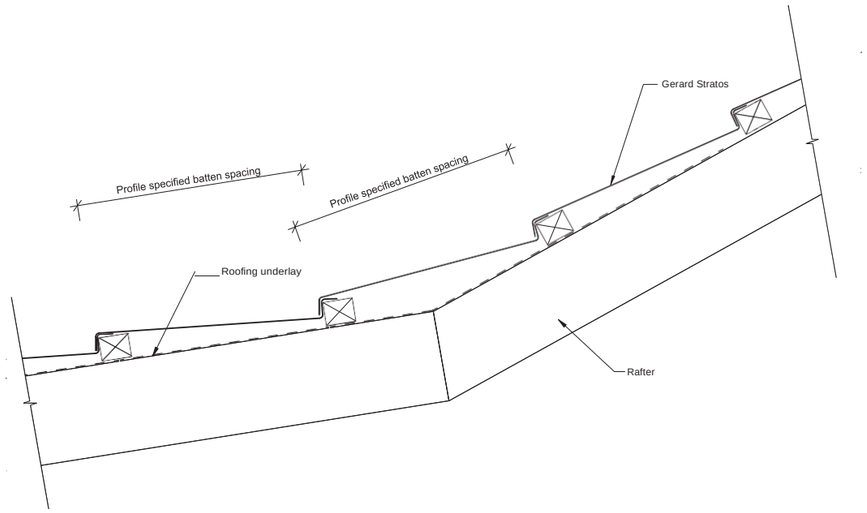

Fig 026 - Gerard Change in Pitch
A batten is located at the point where the roof line changes pitch. If an exact number of courses of full panels is not practical a panel may be bent to suit.

4.9 Penetrations

4.9.1 Pipes

Pipe penetrations should be flashed using an EPDM flexible sleeve/boot or similar, such as Aquaseal. The edge of the EPDM flexible sleeve/boot should be fixed at 45° to horizontal.

4.9.2 Chimneys

Chimneys require specific flashings depending on the type and width of the chimney.

Cylindrical chimneys may be flashed with a large EPDM rubber sleeve similar to pipe flashings.

Rectangular chimneys require a back flashing. For chimneys up to 600 mm wide this may be made of flat sheet supplied by Gerard Roofs, AZ150 pre-painted steel, aluminium, or a supported butyl membrane.

Chimneys exceeding 600mm in width

For chimneys and other penetrations wider than 600mm an internal gutter should be used to create a fall to the edges of the penetration.

This requires a cricket flashing or slope to direct water to the edges using a supported butyl membrane.

Where the chimney is situated at the eave an internal gutter should be installed around the side to allow water to exit into the eave's rainwater system.

Angled internal gutters should be formed using butyl rubber or other inert material such as aluminium. These should be installed by suitably qualified Licensed Building Practitioners (LBPs).

4.9.3 Roof windows

Refer to specific roof window supplier's installation instructions. Typically this will involve cutting and bending panels up to the perimeter of the roof window in a manner that supports installation of the proprietary flashings supplied by the roof window manufacturer.

4.9.4 Solar panels

Refer to specific solar panel supplier's installation instructions. Note that these should allow for fastening directly to the rafters and not to the roof panel battens. Penetrations of the support must be appropriately flashed to ensure weather security, e.g. an EPDM flexible sleeve/boot.

4.10 Extra high wind zone installation

Refer to *Table 04 Fasteners for Panel Battens - Wind Zones - NZS3604.* (Page 23)

Gerard Roofs fixing patterns do not change for extra high wind zones.

Gerard Roofs can provide a wall flashing that retains the panel turn up and offers greater wind-blown rain protection. This is an extended side flashing that has a soft edge to contour the panel surface and a hem at the top section that is mandatory for roofs in extra high wind zones.

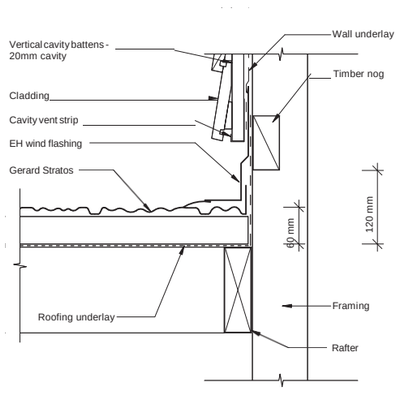

Fig 027 - Gerard Stratos Parallel - EH Wind Wall Flashing

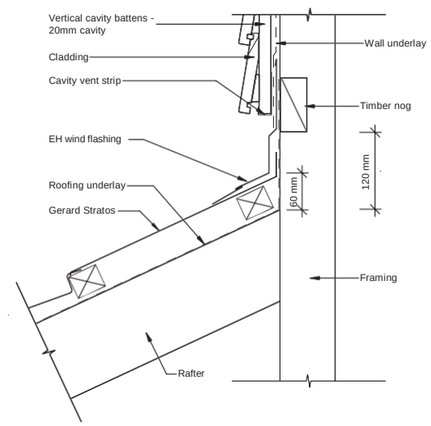

Fig 028 - Gerard Wall Transverse - EH Wind Wall Flashing



5.0 Components & fixing patterns

This section contains useful installation information for very detailed specification. You'll find a complete list of Gerard Roofs componentry and specific layout and fixing instructions for each of the eight Gerard Roof profiles. The information contained in this section is also contained in individual product profile sheets available for download at www.gerardroofs.co.nz/designtech

5.1 Gerard Roofs components

To accompany their eight roof profile panels – Stratos, Senator, Rockport, Alpine, Oberon, Milano, Heritage and Classic – Gerard Roofs produces a full range of accessories.

All components are produced in the same way, from the same steel and, where appropriate, coated to match the roof profile panels themselves using the same materials and techniques to ensure complete synergy for performance and aesthetics.

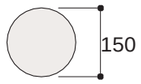

Barrel Trim End

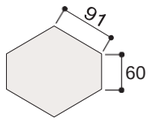

Angle Trim End

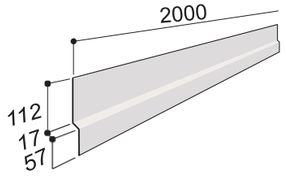

Side Flashing

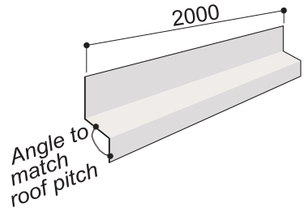

Step Flashing

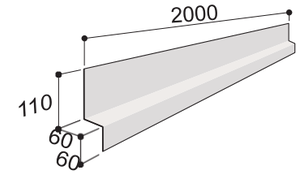

Pitch Flashing

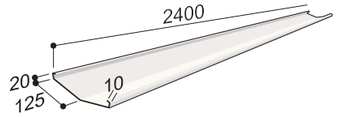

E2 Wide Valley



Left Stop End

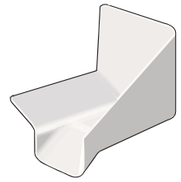

Right Stop End

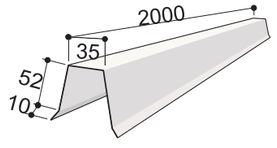

Box Trim

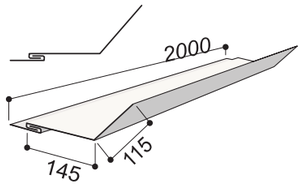

Apron Flashing

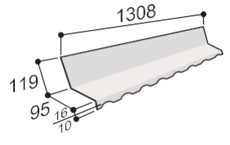

Milano Wall Flashing

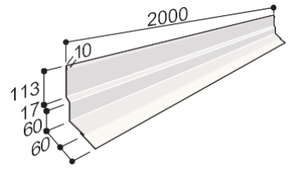

EH Wind Wall Flashing

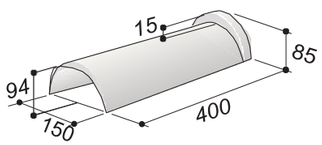

Barrel Trim

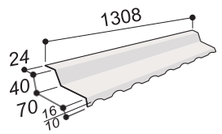

Milano Ridge Flashing

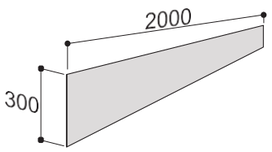

Flat Sheet 300 (Also 400 and 490)

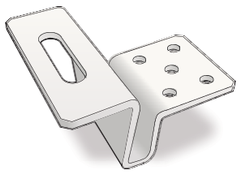

Solar Brackets

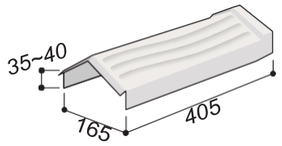

Angle Trim

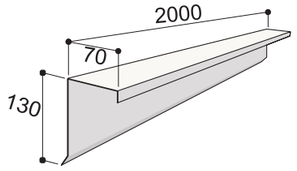

Box Barge

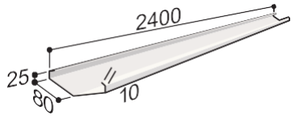

Combination Valley

5.2 Gerard Stratos installation

Panel installation instructions & nailing positions

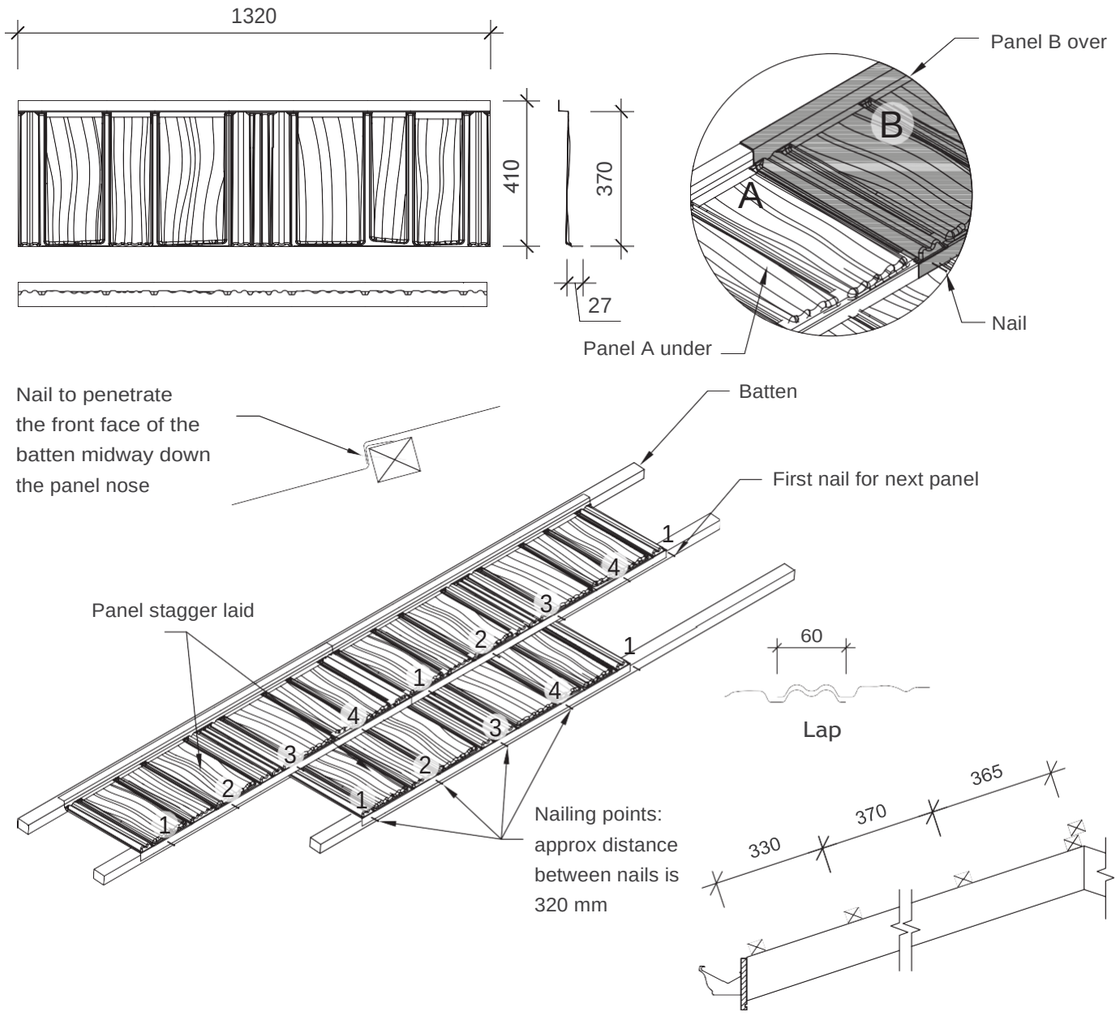

Fixing

- The nose of each panel is held down at 5 points.
- This comprises 4 nails as per the diagrams plus the nailed overlapping panel.

Fastening Panels in Cyclone Areas

- Where a building has been designed outside the scope of NZS 3604. Gerard panels (tiles) on buildings with a wind load design of above 3.8 kPa should be fastened at approx 160 mm spacing (each module).

Dimensions and weights given are nominal.

5.3 Gerard Senator installation

Panel installation instructions & nailing positions

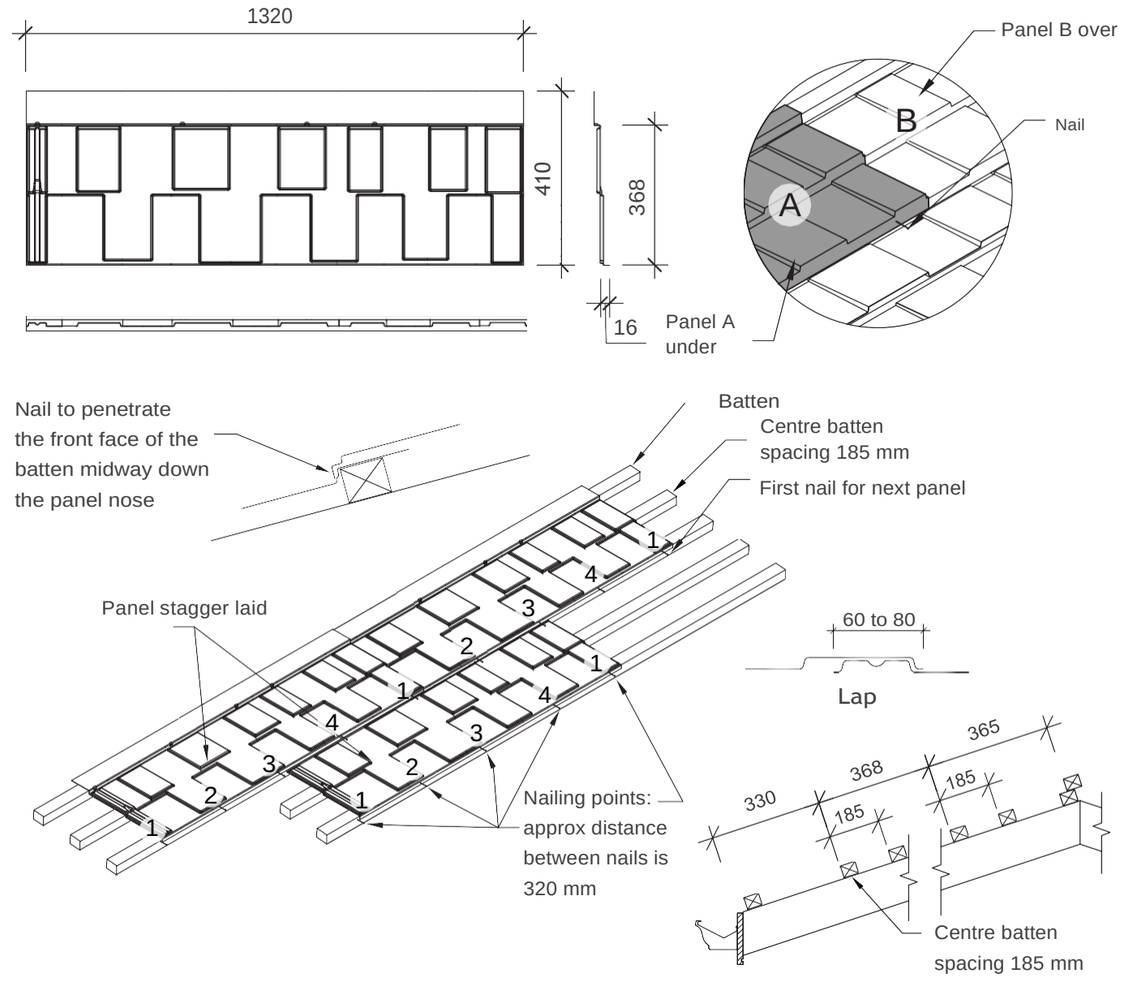

Fixing

- The nose of each panel is held down at 5 points.
- This comprises 4 nails as per the diagrams plus the nailed overlapping panel.

Fastening Panels in Cyclone Areas

- Where a building has been designed outside the scope of NZS 3604. Gerard panels (tiles) on buildings with a wind load design of above 3.8 kPa should be fastened at approx 160 mm spacing (each module).

Dimensions and weights given are nominal.

5.4 Gerard Rockport installation

Panel installation instructions & nailing positions

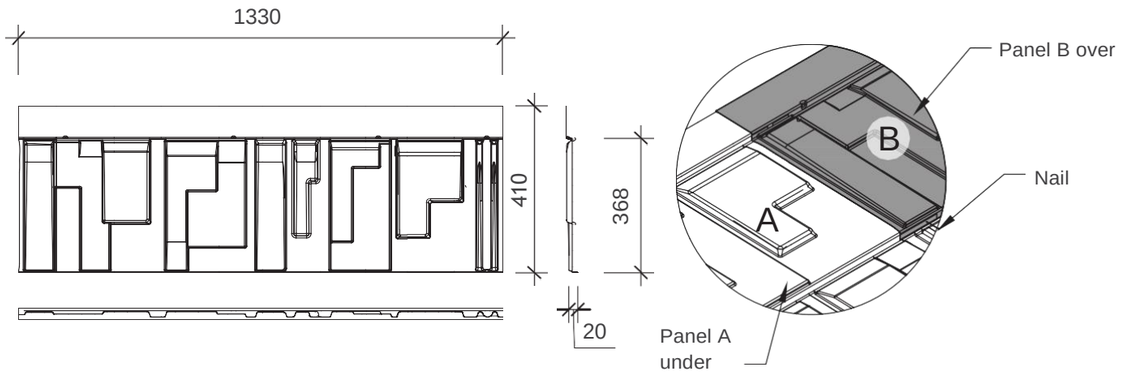

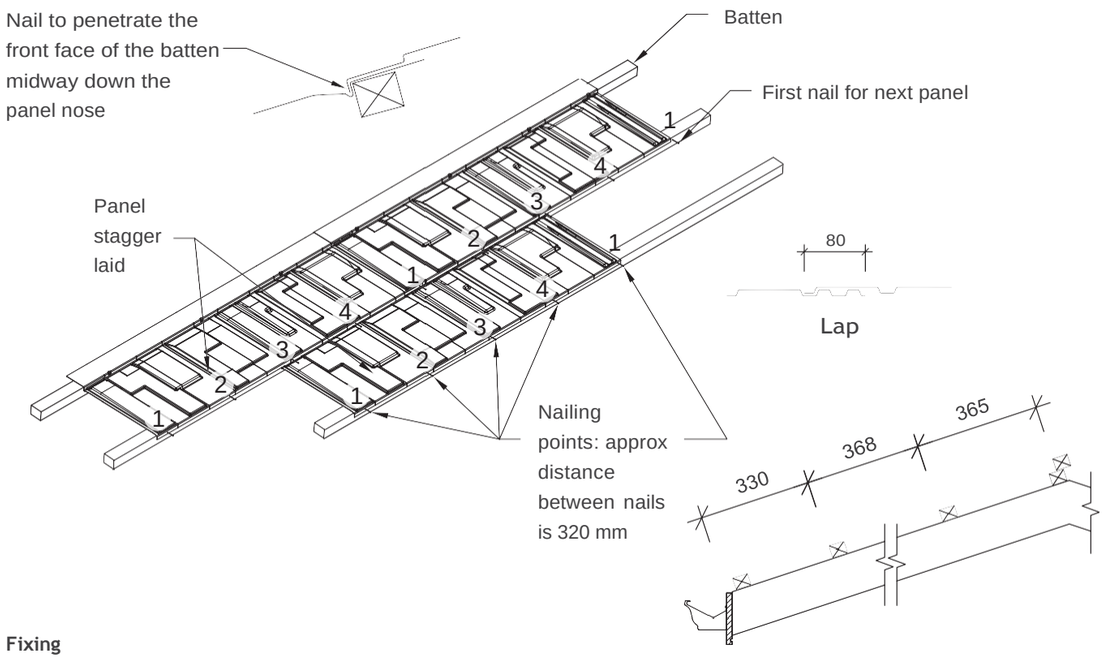

Batten setout

Fixing

- The nose of each panel is held down at 5 points.
- This comprises 4 nails as per the diagrams plus the nailed overlapping panel.

Fastening Panels in Cyclone Areas

- Where a building has been designed outside the scope of NZS 3604. Gerard panels (tiles) on buildings with a wind load design of above 3.8 kPa should be fastened at approx 160 mm spacing (each module).

Dimensions and weights given are nominal.

5.5 Gerard Alpine installation

Panel installation instructions & nailing positions

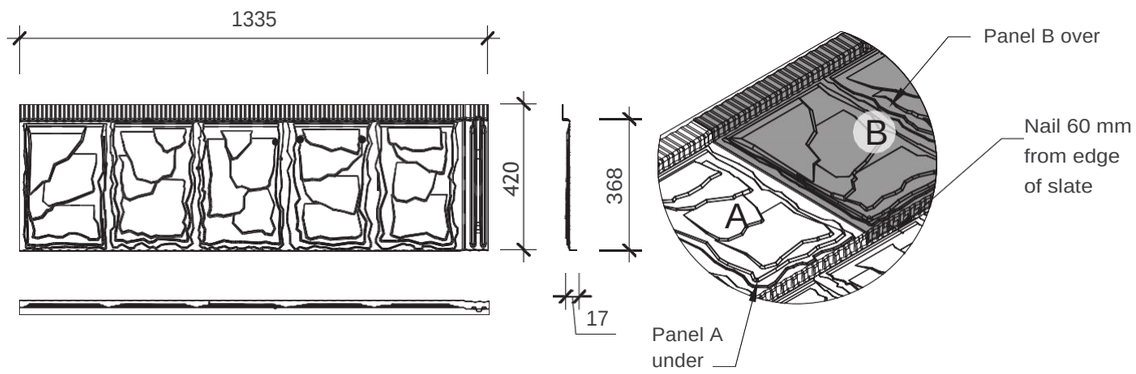

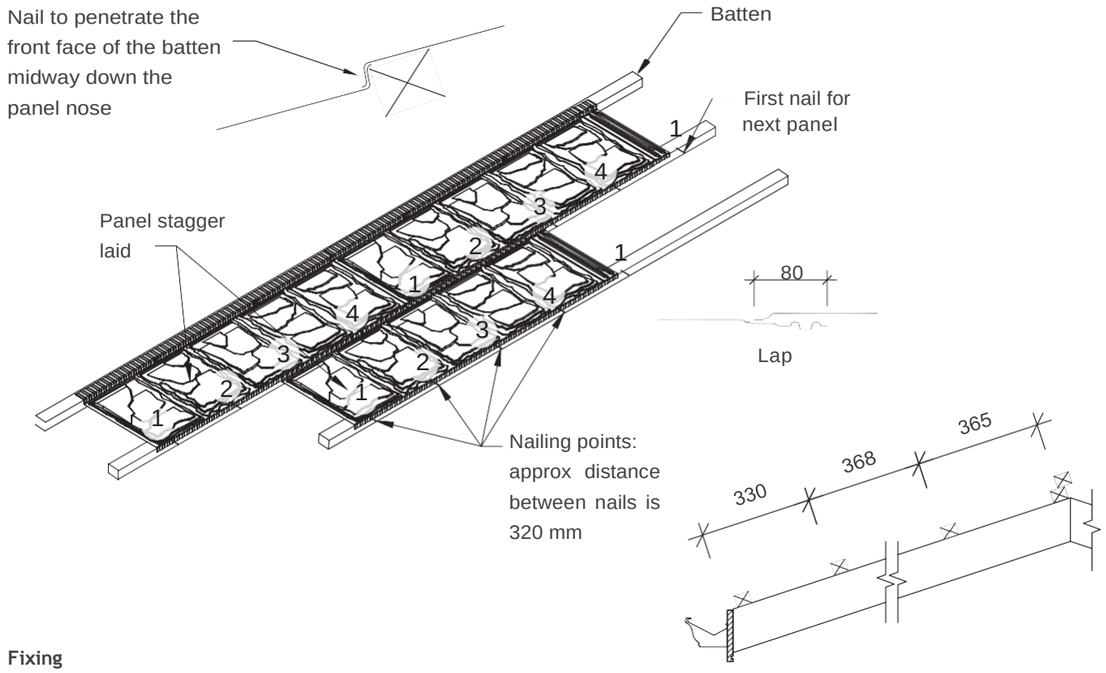

Batten setout

Fixing

- The nose of each panel is held down at 5 points.
- This comprises 4 nails as per the diagrams plus the nailed overlapping panel.

Fastening Panels in Cyclone Areas

- Where a building has been designed outside the scope of NZS 3604. Gerard panels (tiles) on buildings with a wind load design of above 3.8 kPa should be fastened at approx 160 mm spacing (each module).

Dimensions and weights given are nominal.

5.6 Gerard Oberon installation

Panel installation instructions & nailing positions

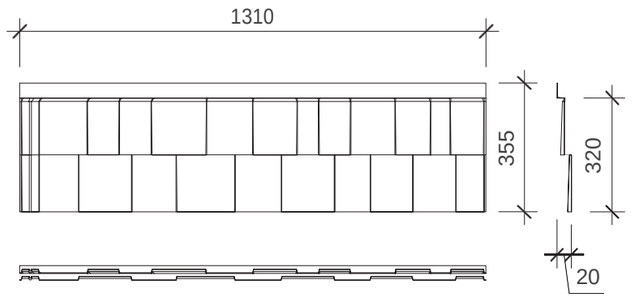

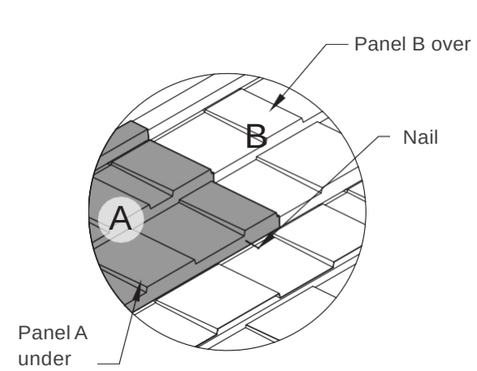

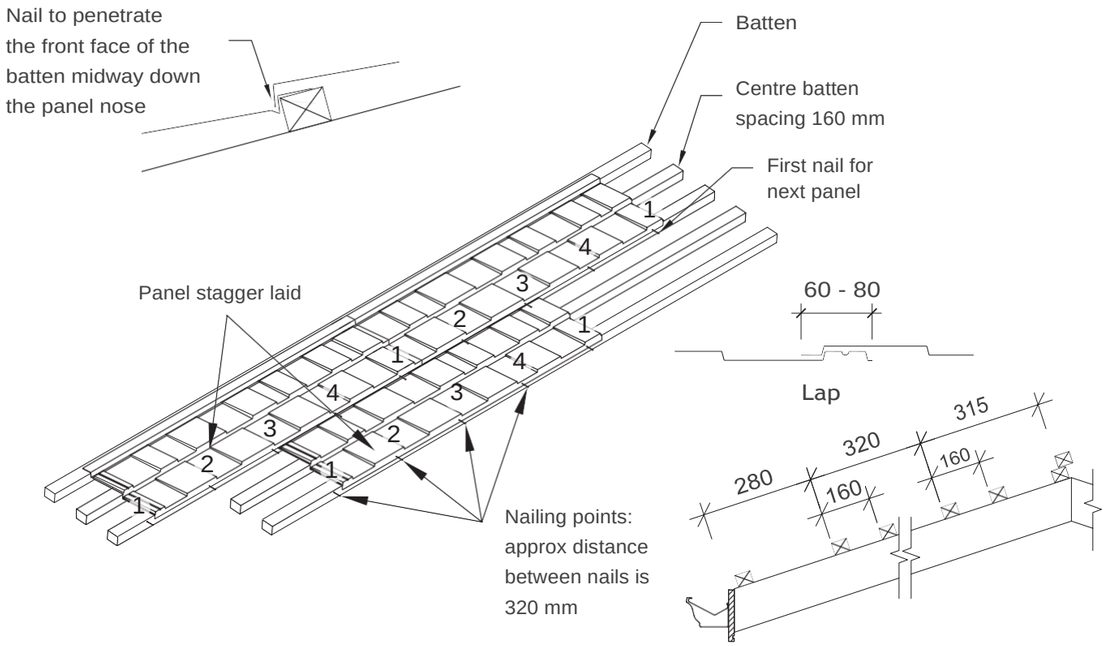

Batten setout

Fixing

- The nose of each panel is held down at 5 points.
- This comprises 4 nails as per the diagrams plus the nailed overlapping panel.

Fastening Panels in Cyclone Areas

- Where a building has been designed outside the scope of NZS 3604. Gerard panels (tiles) on buildings with a wind load design of above 3.8 kPa should be fastened at approx 160 mm spacing (each module).

Dimensions and weights given are nominal.

5.7 Gerard Heritage installation

Panel installation instructions & nailing positions

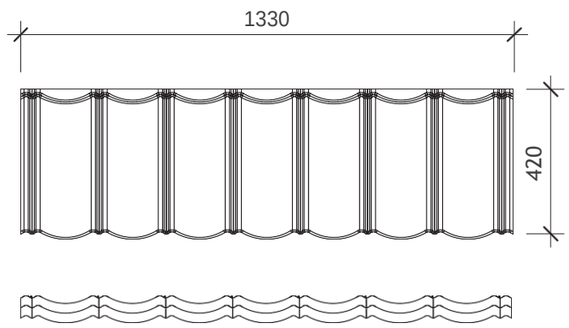

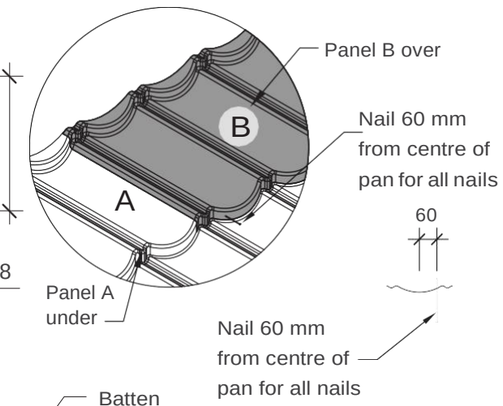

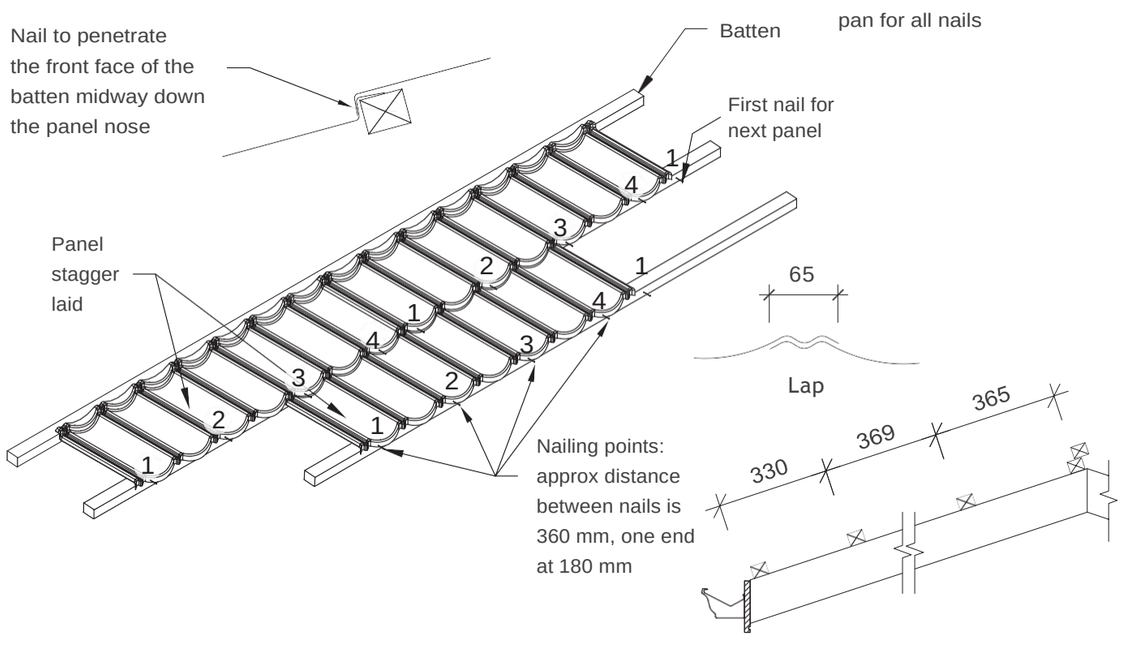

Batten setout

Fixing

- The nose of each panel is held down at 5 points.
- This comprises 4 nails as per the diagrams plus the nailed overlapping panel.

Fastening Panels in Cyclone Areas

- Where a building has been designed outside the scope of NZS 3604. Gerard panels (tiles) on buildings with a wind load design of above 3.8 kPa should be fastened at approx 160 mm spacing (each module).

Dimensions and weights given are nominal.

5.8 Gerard Milano installation

Panel installation instructions & nailing positions

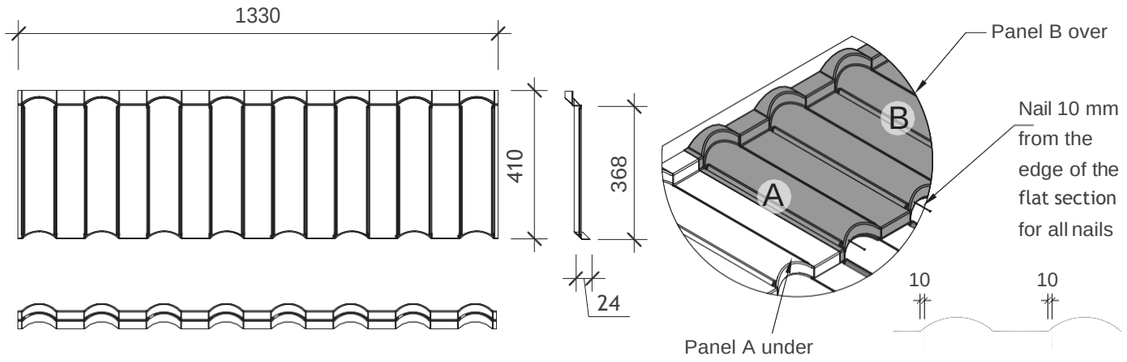

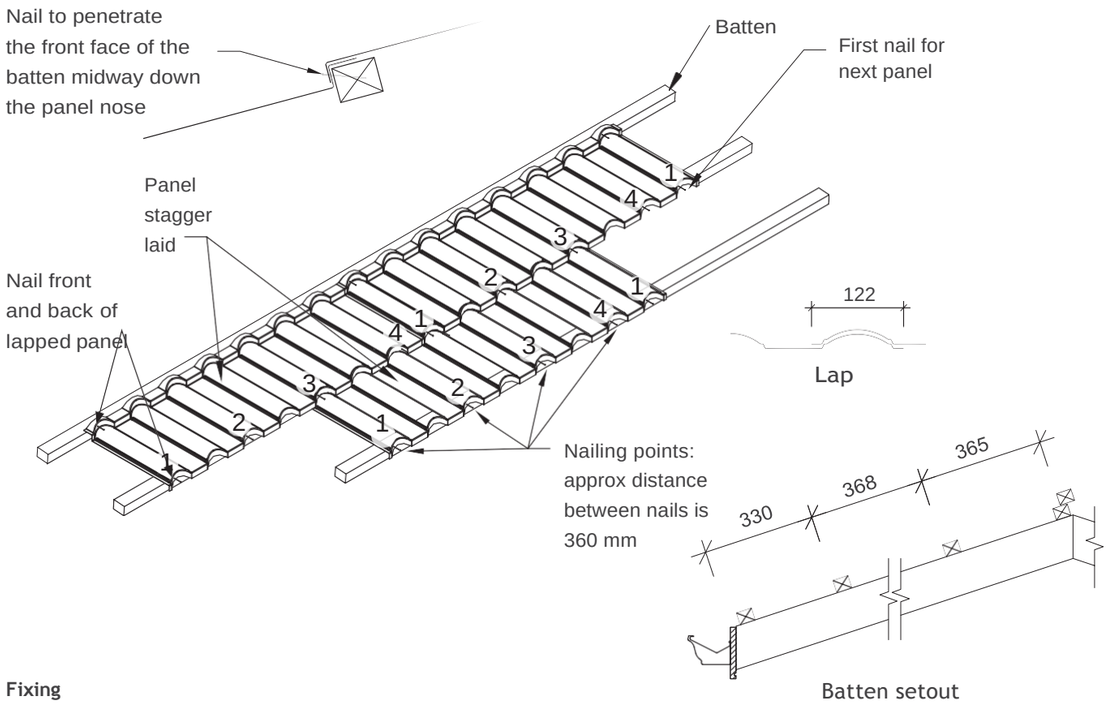

Fixing

- The nose of each panel is held down at 5 points.
- This comprises 4 nails as per the diagrams plus the nailed overlapping panel.
- Nail front and back of lapped panel.

Fastening Panels in Cyclone Areas

- Where a building has been designed outside the scope of NZS 3604. Gerard panels (tiles) on buildings with a wind load design of above 3.8 kPa should be fastened at approx 160 mm spacing (each module).

Dimensions and weights given are nominal.

5.9 Gerard Classic installation

Panel installation instructions & nailing positions

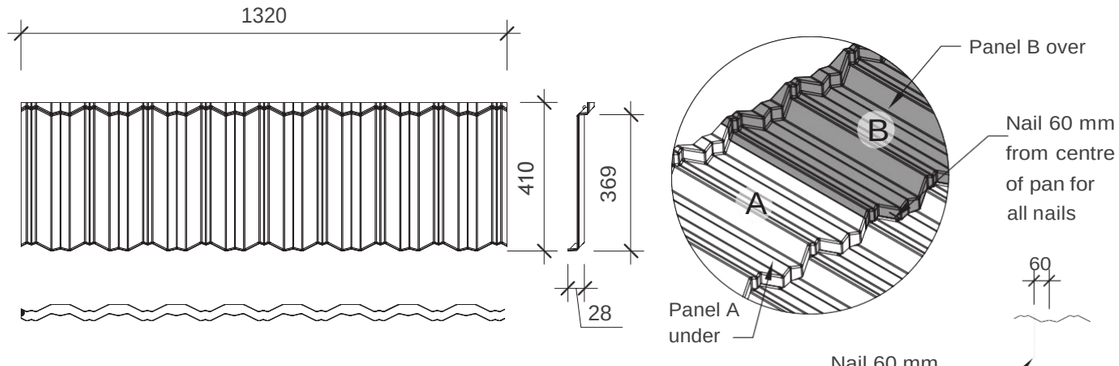

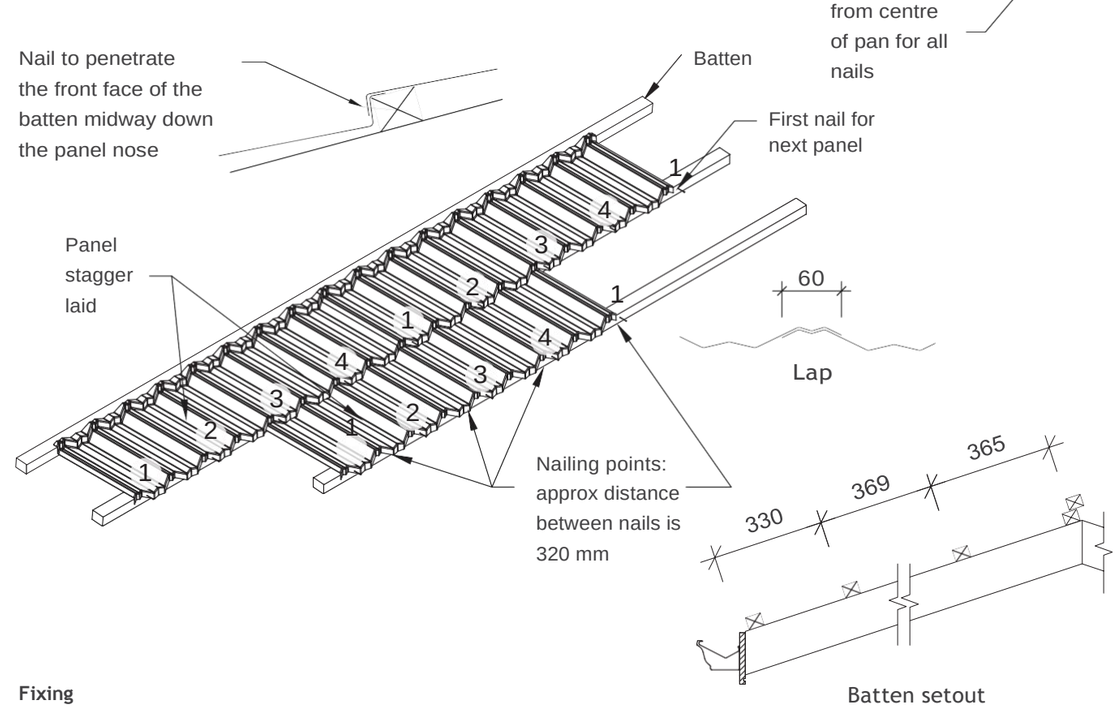

Fixing

- The nose of each panel is held down at 5 points.
- This comprises 4 nails as per the diagrams plus the nailed overlapping panel.

Fastening Panels in Cyclone Areas

- Where a building has been designed outside the scope of NZS 3604. Gerard panels (tiles) on buildings with a wind load design of above 3.8 kPa should be fastened at approx 160 mm spacing (each module).

Dimensions and weights given are nominal.

Important information about this material

The Gerard Roofing System

RoofTG Pacific Ltd accepts no liability if the Gerard roofing system is not used in accordance with instructions contained in this publication.

Use only the current specification

This publication may be superseded by a newer publication. RoofTG Pacific Ltd accepts no liability for reliance upon publications that have been superseded. Before using this manual check whether this is the current version; simply call the Gerard Roofs Helpline on 0800 100 244 or visit www.gerardroofs.co.nz

Substitution

RoofTG Pacific Ltd accepts no liability if the systems are not installed in accordance with instructions contained in this and other Gerard Roofs technical literature. Substitution of specified or recommended components with alternative brands can compromise performance dramatically. The Gerard roofing system is not generic and must be installed as specified including the use of Gerard branded components.

Trade marks

The names, Gerard®, Stratos®, Senator®, Rockport®, Alpine®, Oberon®, Heritage®, Milano®, Classic®, Roofing Designed to Endure® and the Gerard® Roofs logo are all registered trademarks that are owned by RoofTG Pacfic Ltd.

Copyright

Copyright © RoofTG Pacific Ltd 2020. All of the material contained in this manual, including all text, tables, charts, graphs, drawings, diagrams and the Gerard Roofs CAD Detail Numbering System are protected by copyright. These materials may not be reproduced, adapted or transmitted in any form by any process, without the permission of RoofTG Pacific Ltd.

RoofTG Pacific Ltd asserts its moral rights and reserves all other intellectual property rights in the materials contained in this manual.

PO Box 18071
Glen Innes
Auckland 1743

Freephone: 0800 100 244

www.gerardroofs.co.nz

GER2006-25
This edition published July 2020



ROOF CARE AND MAINTENANCE.

Maintenance of Gerard textured or smooth finish roofs is primarily a matter of preventing or removing unwanted algae, moss and lichen that may grow on the roof.

GERARD
Roofing Designed to Endure

LOOKING AFTER YOUR GERARD ROOF

Keeping your roof clean

It is a condition of the material and product warranty for Gerard Roofs' products that the roof is kept free of organic growth by periodic cleaning with an appropriate agent.

Why would my roof need cleaning?

Organic growth like lichen and moss is a natural phenomenon that occurs on most permanent outdoor structures including your roof.

Its appearance and extent is dependent on local conditions and can even vary on different parts of the same roof. Temperature and humidity, the pitch and orientation of the roof and the location of nearby trees are all possible contributing factors.

Left unchecked, organic growth can cause damage to the surface coating of your roof and can create 'moisture traps' that cause corrosion.

Atmospheric pollutants

Atmospheric pollutants such as dirt from building sites, fertilisers from nearby farms and pollen also contaminate roofs. These are often mistaken for organic growth, particularly on new roofs.

Pollutants may rinse off in heavy rain - if they don't they should be washed off or they may remain and contribute nutrients for organic growth to accumulate on in future.

Recognising different types of growth

There are several organic nasties to look out for including mosses, algal growth (which may be apparent as either a green or black staining of the surface) and lichens (which can vary from light green through to bright orange, in a number of different shapes, dependent on species).

Treat unwanted growth with Gerard Roof Refresh

Remove any unwanted growth by spraying with Gerard Roof Refresh or another suitable chemical cleaner. You can do this yourself or contact a commercial contractor who specialises in this type of work. (Your Gerard Certified Roofer can put you in touch with someone reputable who can clean your roof cost effectively.)

Some organic growths will be killed immediately after spraying, and will disappear after a few rainfalls. Other types of growths, such as black algae and lichen, may take many rainfalls and as long as 6 months to be removed from the surface.

You will know the treatment is working if the organic growth changes colour. This may take from a few days to a few weeks. In some circumstances, like particularly heavy infestations, it may be necessary to re-apply the cleaning agent 1–2 months after the original application to ensure that all growth has been terminated.

Water blasting is generally not recommended for cleaning organic growth from Gerard tiles, but may be used to remove residual matter after the growth and its spores have been chemically treated. Care must be taken not to damage the surface coating.

Prevent growth before it happens

Treating the roof will not only kill any growth, but also the spores that lead to it. We suggest treating the roof every three to five years, however if you see growth occurring sooner, we recommend you treat the roof immediately.

It's best to chemically clean your roof before growths are seen, as a preventive measure. Spores may be present on the roof for up to two years before the appearance of any organic growth.

Don't accidentally taint your drinking water

If rainwater is collected from the roof for drinking, the water connection system should be disconnected from the tank before any chemical cleaning of the roof and before the installation of any new tiles.

The system should remain unconnected for at least three heavy rainfalls to ensure the removal of any residue. Alternatively the roof can be thoroughly hosed down with clean water before reconnection.

Special note about run-off to stormwater

The majority of local government bodies have prohibitions against chemicals being washed away in stormwater systems. Check with your local authority about prevailing requirements as to disposal/ diversion of waste water before treating your roof.

	USE ONLY APPROVED CLEANING PRODUCTS	
	Smooth finish (any age) / Textured finish (under 5 years old)	Textured finish (over 5 years old)
Treatment	Gerard Roof Refresh or appropriate sanitising wash (known variously as Alkyl Benzyl Ammonium Chloride or Quaternary Ammonium compounds)	Gerard Roof Refresh, hypochlorite, bleach or other sanitising wash (known variously as Alkyl Benzyl Ammonium Chloride or Quaternary Ammonium compounds)
Application	Follow the manufacturer's recommendations on application rates, strengths and compatibility in all circumstances; most stringently in situations where rainwater is collected from the roof for drinking.	

NB: Hypochlorite based cleaners should never be used on Smooth Finish roofs, nor used on Textured roofs under 5 years old as it can affect the clear overglaze that is applied to the tiles during their manufacture.

Dealing with corrosion

Your Gerard roof is made of steel and, despite its protective coatings, may be subject to some form of corrosion during its lifespan. In the unlikely event this occurs, you should take steps to prevent any rust spots from developing into holes.

In most cases, where only a handful of tiles show signs of corrosion, it's usually straightforward to have these replaced, after identifying and mitigating the cause of the corrosion. (Your Gerard Certified Roofer can sort this out cost effectively.)

Corrosion could affect your warranty

Please note that rust left untreated and leading to failure of components may invalidate a warranty claim. The warranty provides for 50 years weather-tightness for your roof, not for the absence of corrosion nor that the roof remain maintenance-free.

Re-coating your Gerard roof

Your Gerard roof has been manufactured to last a long time. However, as with all coated roofing materials, its surface will need to be refurbished as part of its maintenance at some future point.

Signs that it's time to re-coat your roof

If your Gerard roof develops white corrosion deposits over the surface it's usually a sign that recoating is now prudent – left to deteriorate this may lead to more difficult problems.

Gerard smooth finish roofs

If your roof has a smooth finish, re-coating is best undertaken by a roof-restoration contractor who can also carry out any necessary repairs at the same time. (Your Gerard Certified Roofer can put you in touch with the right people.)

If you do wish to take on re-coating your roof as a Do-It-Yourself project please contact Gerard Roofs for the most up to date advice on appropriate materials and procedures.

Gerard textured roofs

If you have a textured roof, Gerard Roofs recommends that re-coating is undertaken by a specialist contractor. These people have the expertise, access to the appropriate equipment and to coatings which are not available through normal retail outlets.

A specialist roof-restoration contractor can also carry out any repairs your roof may need. (Your Gerard Certified Roofer can put you in touch with the right company.)

Alterations to your Gerard roof

This section contains technical information for tasks beyond routine maintenance and should be referred to when making alterations to things that contact or impinge on the roof.

Your Gerard roof is a sophisticated system of interlocking steel tiles fixed to the framing of the house to form an integral part of the structure. As such it may only be installed by recognised and qualified tradespeople.

Gerard Roofs does not recommend roof alterations be undertaken by homeowners on a Do-It-Yourself basis. Work on your Gerard roof that is incorrectly carried out may void the warranty.

Alterations that affect your roof

When making alterations such as adding chimneys, skylights, or extensions to your home, it is important to ensure that the materials used are compatible with your Gerard roof.

Gerard Roofs' tiles are manufactured from Aluminium-Zinc coated steel and then post-coated with a protective and decorative coating system.

Dissimilar Metal Corrosion

When two different metals are in contact and moisture is present, one metal is relatively protected while the other suffers accelerated corrosion. A similar effect often occurs with water flowing over different metals.

This form of corrosion is commonly found:

- Where water is discharged from copper or brass systems over a galvanised or Aluminium-Zinc coated steel roof
- Where lead flashings are applied directly to Aluminium-Zinc coated steel products without proper isolation
- Where fasteners are incompatible with the roofing material

Any electrical contact between dissimilar metals should be avoided, e.g. wet leaves making contact between copper gutters and Aluminium-Zinc coated steel roof tiles.

Directing water-flow to minimise potential corrosion



This chart lists commonly used metals in a 'Galvanic Series'. If any two of these metals are in damp contact or a run-off situation, the metal further to the left will sacrifice itself to protect the metal further to the right. Therefore the simple rule to remember is that you can run water from left to right, but not from right to left. For example zinc to copper is alright, but copper to zinc is not. Specific advice should be sought from Gerard Roofs regarding use of dissimilar metals.

GERARD ROOFS CARE AND MAINTENANCE

Walking on your Gerard roof

You should not walk on your roof unless it is absolutely necessary. If you do have occasion to, you should wear soft-soled shoes like 'trainers' to avoid damage to the roof's surface. Make sure you always place your weight over the battens (the lowest point of the tile, at the front edge).

If you have to walk on your roof, take your time. Take particular care on steep pitch roofs and, if at all possible, you should avoid walking on the roof when it's wet. Always take appropriate precautions to prevent falls when working at height.

If service/trade persons need to access the roof, let them know that it is a steel tile roof and, if need be, tell them where it's safest to walk. Most good tradespeople know how to walk over roofs but, for safety's sake, they should be informed as to what precautions are required.

Working safely at heights

To stay safe when working on a roof, you need to ensure effective controls are in place to prevent people being harmed. To select the most effective controls, you must consider the following steps in sequence:

1. Eliminate the chances of a fall by doing as much of the preparation work as possible on the ground.
2. Isolate the worker from the risk of a fall by using scaffolds and edge protection to prevent the fall.
3. Only when these steps are not achievable should the risk be minimised by the use of a fall restraint or a fall protection system such as safety nets or airbags.

In some situations a combination of controls will be required to ensure safe work.

Where to stand

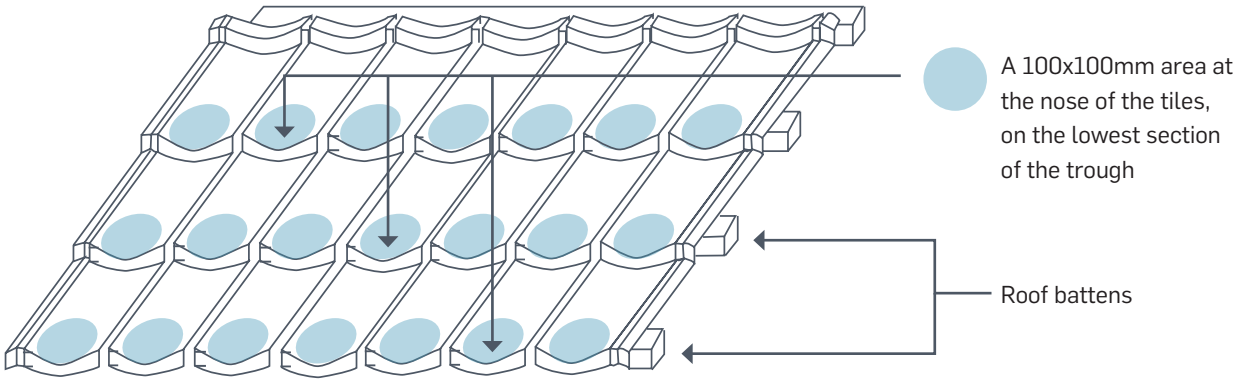

This document is produced in the interest of customer education and good customer relations. Gerard Roofs has endeavoured to provide the most technically correct and up to date advice possible but, subject to claims a person may have under New Zealand legislation, assumes no responsibility in relation to such information or advice. Alteration in the specification or instructions may occur from time to time.

Please contact Gerard Roofs for the most up to date technical advice available prior to using this information.

Gerard Roofs, PO Box 18071, Glen Innes, Auckland 1743, New Zealand.
Freephone 0800 100 244 www.gerardroofs.co.nz

GERARD
Roofing Designed to Endure

4710EW Earthwool Glasswool Insulation

Knauf Insulation New Zealand
+64 0800 562834
tech.nz@knaufinsulation.com
http://www.knaufinsulation.co.nz/

SUPPORTING DOCUMENTS

Datasheet - Earthwool glasswool - ceiling and roof rolls

Ref 11261. Uploaded 30 Aug 2020

Purpose: Performance

Datasheet - Earthwool glasswool - wall insulation

Ref 11263. Uploaded 30 Aug 2020

Purpose: Performance

Datasheet - Earthwool glasswool: acoustic insulation (internal walls, midfloors, susp ceilings)

Ref 11260. Uploaded 30 Aug 2020

Purpose: Performance

Earthwool® glasswool insulation acoustic batts 104858

Ref 10105. Uploaded 26 Jun 2020

Purpose: Installation, Maintenance, Environmental

Earthwool® glasswool insulation ceiling roll 104859

Ref 10106. Uploaded 26 Jun 2020

Purpose: Installation, Maintenance, Environmental

Earthwool® glasswool insulation wall batts 104856

Ref 10108. Uploaded 26 Jun 2020

Purpose: Installation, Maintenance, Environmental

Installation instructions - Earthwool glasswool - ceiling rolls/roof blanket

Ref 11389. Uploaded 31 Aug 2020

Purpose: Installation

Installation instructions - Earthwool glasswool - ceiling segments

Ref 11378. Uploaded 31 Aug 2020

Purpose: Installation

Installation instructions - Earthwool glasswool - wall

Ref 11393. Uploaded 31 Aug 2020

Purpose: Installation

KNAUFINSULATION

www.knaufinsulation.co.nz

EARTHWOOL® GLASSWOOL INSULATION: ROOF BLANKET

May 2019



with ECOSE® TECHNOLOGY

APPLICATIONS

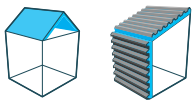

DESCRIPTION

Earthwool® glasswool insulation: roof blanket (unfaced) provides thermal and acoustic insulation for commercial roofs. Condensation control can be achieved when the product is faced with foil of the appropriate duty classification. Earthwool® glasswool insulation: roof blanket (unfaced) range includes a selection of R-Values to provide builders, designers and installers the opportunity to choose the best thermal performance for their project. Earthwool® glasswool insulation: roof blanket (unfaced) will improve the thermal comfort and energy efficiency of the building in which it has been installed thus keeping it cool in summer and warm in winter. Super-soft to handle and install, Earthwool® glasswool is made using up to 80% recycled glass and with ECOSE® Technology, a sustainable, bio-based binder that contains no added formaldehyde.

PERFORMANCE

Thermal	
Thermal conductivity: Thermal resistance:	ASTM C 518 and AS/NZS 4859.1: 2002. ASTM C 653 and AS/NZS 4859.1: 2002.
Fire Hazard Properties (AS/NZ 1530.3)	Ignitability: 0, Spread of Flame: 0, Heat Evolved: 0, Smoke Developed: 0-1.
Water Vapour Absorption	Less than 5% by weight.
Microbial Growth	Does not support microbial growth.
Corrosion Resistance	No greater than sterile cotton.
Combustibility (AS 1530.1)	Non-combustible.

BENEFITS

- ✔ High thermal performance - year round comfort
- ✔ Sound absorbing
- ✔ Non-combustible
- ✔ Saves energy - lower energy bills
- ✔ No added formaldehyde
- ✔ Soft to handle and install
- ✔ 50 year warranty
- ✔ Compression packed - more product per pack
- ✔ Odourless.

CERTIFICATION

challenge. create. care.

KNAUFINSULATION

www.knaufinsulation.co.nz

EARTHWOOL® GLASSWOOL INSULATION: ROOF BLANKET

May 2019

ADDITIONAL INFORMATION

Specification Guide

The roof insulation shall be Earthwool® glasswool insulation: roof blanket R*, *mm thick, BRANZ appraised to meet the provisions of the NZBC. The product will be non-combustible, CFC/HCFC free, zero ODP and GWP, Global GreenTag Cert™ Level A certified, glasswool insulation with high post-consumer recycled glass content and with ECOSE® Technology. It will be manufactured under Quality Assurance Standards ISO 9001:2008 and ISO 14001:2004 by Knauf Insulation and shall be installed in accordance with the instructions issued by them.
*architect to insert details of products used.

Specification Compliance

AS/NZS 4859.1: 2002 Materials used in the Thermal Insulation of Buildings and comply with the New Zealand Building Code requirements: B2 – Durability, E3 – External Moisture, F2 – Hazardous Building Materials, and H1 – Energy Efficiency, as appraised by BRANZ. Earthwool® glasswool insulation: roof blanket is an acceptable solution in terms of the New Zealand Building Code.

Bio-solubility

The formulation used for Earthwool® glasswool insulation has been independently assessed to meet the requirements of the stringent Note Q standard (and is therefore consistent with the highest Australian and New Zealand industry standards), and also assessed by Knauf Insulation against the criteria of the Australian Safety and Compensation Council ASCC Approved Criteria for Classifying Hazardous Substances [NOHSC: 1008 3rd Edition]. As a result of this assessment, Earthwool® glasswool insulation is not classified as hazardous according to the NOHSC criteria.

Environmental

Earthwool® glasswool insulation: roof blanket represents no known threat to the environment and have zero Ozone Depletion Potential and zero Global Warming Potential.

Proven Performance

- Preferred by professional installers concerned with quality, appearance and productivity.
- Excellent acoustical properties reduce sound transmission in the home when properly installed in walls, ceiling and floor systems.

Durability

- Earthwool® glasswool insulation is odourless, rot proof, non-hygroscopic, does not sustain vermin and will not encourage the growth of fungi, mould or bacteria.

Superior Handling

- Highly resilient insulation recovers quickly to full thickness for a snug fit and superior finished aesthetics.
- Consistent quality materials feel good, cut easily and install fast.
- Low dust for easier handling and increased productivity.

Convenient Packaging, Easier Handling

- Earthwool® glasswool insulation is packaged in a strong, white poly film that offers excellent protection from abuse, dust and moisture.
- Earthwool® glasswool insulation packages feature easy to follow installation instructions.
- MasterBag insulation units (containing multiple packs) ensure reduced handling costs with improved compression – more square metres per bag, more square metres per truck load, fewer trips to the job site and less warehouse space for storage.

Superior Service and Support

- Knauf Insulation is focused on providing first class customer service, producing high quality products and 'in full on time' deliveries.
- Knauf Insulation recognises the need to establish, develop and support a professional network of distributors and re-sellers in order to service a growing insulation market.
- Knauf Insulation is committed to providing a comprehensive range of relevant sales and marketing literature and web-based technical information to support specifiers and customers.

challenge.
create.
care.

KNAUFINSULATION

www.knaufinsulation.co.nz

EARTHWOOL® GLASSWOOL INSULATION: ROOF BLANKET

May 2019

SPECIFICATIONS

Product Code	R-Value (m^2K/W)	Thickness (mm)	Width (mm)	Length (mm)	Pieces per pack	Area per pack (m^2)	Packs per MasterBag	MasterBags per Supakube
470311	1.8	70	1200	13500	1	16.2	4	6
470313	2.9	115	1200	8500	1	10.2	4	6
470315	3.2	135	1200	8000	1	9.6	4	6
470317	3.6	150	1200	7000	1	8.4	4	6

with ECOSE® TECHNOLOGY

Earthwool® glasswool products made with ECOSE® Technology benefit from a no added formaldehyde binder, which is less energy intensive than traditional binders and is based on rapidly renewable, bio-based materials instead of petro-based chemicals. The technology has been developed for Knauf Insulation's glass and rock mineral wool products, enhancing their environmental credentials without affecting the thermal, acoustic or fire performance. Earthwool® glasswool products made with ECOSE® Technology contain no added dyes or artificial colours.

Knauf Insulation Ltd

PO Box 217 063, Botany Junction,
Auckland, 2013, New Zealand

Customer Service: Tel: 0800 562 834
Fax: +61 7 3902 0613

Technical Advisory Centre: tech.nz@knaufinsulation.com

All rights reserved, including those of photomechanical reproduction and storage in electronic media. Extreme caution was observed when putting together and processing the information, texts and illustrations in this document. Nevertheless, errors cannot quite be ruled out. The publisher and editors cannot assume legal responsibility or any liability whatever for incorrect information and the consequences thereof. The publisher and editors will be grateful for improvement suggestions and details of possible errors pointed out.

challenge.
create.
care.

KINZ0914115DS

Updated June 2019

KNAUFINSULATION

www.knaufinsulation.co.nz

EARTHWOOL® GLASSWOOL INSULATION: EXTERNAL WALL

May 2020



with ECOSE® TECHNOLOGY

APPLICATIONS



DESCRIPTION

The Earthwool® glasswool insulation: external wall batt range includes a selection of R-Values and densities to provide builders, designers, installers and DIYers the opportunity to choose the best thermal and acoustic performance for their project. Earthwool® glasswool insulation: external wall batt will absorb the transfer of unwanted sound from outside to inside the building. In addition to sound absorption, Earthwool® glasswool insulation: external wall batt will improve the thermal comfort and energy efficiency of the building in which it has been installed thus keeping it cool in summer and warm in winter. Super-soft to handle and install, Earthwool® glasswool is made using up to 80% recycled glass and with ECOSE® Technology, a sustainable, bio-based binder that contains no added formaldehyde.

PERFORMANCE

Thermal	
Thermal conductivity: Thermal resistance:	ASTM C 518 and AS/NZS 4859.1: 2002. ASTM C 653 and AS/NZS 4859.1: 2002.
Fire Hazard Properties (AS/NZ 1530.3)	Ignitability: 0, Spread of Flame: 0, Heat Evolved: 0, Smoke Developed: 0-1.
Water Vapour Absorption	Less than 5% by weight.
Microbial Growth	Does not support microbial growth.
Corrosion Resistance	No greater than sterile cotton.
Combustibility (AS 1530.1)	Non-combustible.

BENEFITS

- ✔ High thermal performance - year round comfort
- ✔ Sound absorbing
- ✔ Non-combustible
- ✔ Saves energy - lower energy bills
- ✔ No added formaldehyde
- ✔ Soft to handle and install
- ✔ 50 year warranty
- ✔ Compression packed - more product per pack
- ✔ Odourless.

CERTIFICATION

GREENTAG CERTIFIED trust brands

BRANZ Appraised Appraisal No.648 (2016) Wall, Ceiling and Acoustic

INDOOR AIR COMFORT eurofins GOLD CERTIFIED PRODUCT

EUCEB

CODEMARK 30095

challenge. create. care.

KNAUFINSULATION

www.knaufinsulation.co.nz

EARTHWOOL® GLASSWOOL INSULATION: EXTERNAL WALL

May 2020

ADDITIONAL INFORMATION

Specification Guide

The wall insulation shall be Earthwool® glasswool insulation: external wall batt R*, *mm thick, BRANZ appraised to meet the provisions of the NZBC. The product will be non-combustible, CFC/HCFC free, zero ODP and GWP, Global GreenTag Cert™ Level A certified, glasswool insulation with high post-consumer recycled glass content and with ECOSE® Technology. It will be manufactured under Quality Assurance Standards ISO 9001:2008 and ISO 14001:2004 by Knauf Insulation and shall be installed in accordance with the instructions issued by them.
*architect to insert details of products used.

Specification Compliance

AS/NZS 4859.1: 2002 Materials used in the Thermal Insulation of Buildings and comply with the New Zealand Building Code requirements: B2 – Durability, E3 – External Moisture, F2 – Hazardous Building Materials, and H1 – Energy Efficiency, as appraised by BRANZ. The Earthwool® glasswool insulation: external wall batt range is an acceptable solution in terms of the New Zealand Building Code. This product is designed for use in timber and metal frame applications in new and existing domestic and commercial buildings.

Bio-solubility

The formulation used for Earthwool® glasswool insulation has been independently assessed to meet the requirements of the stringent Note Q standard (and is therefore consistent with the highest Australian and New Zealand industry standards), and also assessed by Knauf Insulation against the criteria of the Australian Safety and Compensation Council ASCC Approved Criteria for Classifying Hazardous Substances [NOHSC: 1008 3rd Edition]. As a result of this assessment, Earthwool® glasswool insulation is not classified as hazardous according to the NOHSC criteria.

Environmental

Earthwool® glasswool insulation: external wall batt represents no known threat to the environment and have zero Ozone Depletion Potential and zero Global Warming Potential.

Proven Performance

- Preferred by professional installers concerned with quality, appearance and productivity.
- Excellent acoustical properties reduce sound transmission in the home when properly installed in walls, ceiling and floor systems.

Durability

- Earthwool® glasswool insulation is odourless, rot proof, non-hygroscopic, does not sustain vermin and will not encourage the growth of fungi, mould or bacteria.

Superior Handling

- Highly resilient insulation recovers quickly to full thickness for a snug fit and superior finished aesthetics.
- Consistent quality materials feel good, cut easily and install fast.
- Low dust for easier handling and increased productivity.

Convenient Packaging, Easier Handling

- Earthwool® glasswool insulation is packaged in a strong, white poly bag that offers excellent protection from abuse, dust and moisture.
- Earthwool® glasswool insulation packages feature easy to follow installation instructions.
- MasterBag insulation units (containing multiple packs) ensure reduced handling costs with improved compression – more square metres per bag, more square metres per truck load, fewer trips to the job site and less warehouse space for storage.

Superior Service and Support

- Knauf Insulation is focused on providing first class customer service, producing high quality products and 'in full on time' deliveries.
- Knauf Insulation recognises the need to establish, develop and support a professional network of distributors and re-sellers in order to service a growing insulation market.
- Knauf Insulation is committed to providing a comprehensive range of relevant sales and marketing literature and web-based technical information to support specifiers and customers.

KNAUF INSULATION

www.knaufinsulation.co.nz

EARTHWOOL® GLASSWOOL INSULATION: EXTERNAL WALL

May 2020

SPECIFICATIONS

Product Code	R-Value (m^2K/W)	Thickness (mm)	Width (mm)	Length (mm)	Pieces per pack	Area per pack (m2)	Packs per MasterBag	MasterBags per Supakube
471045	1.4	50	580	1160	38	25.57	4	4
471038	2.2	90	580	1160	29	19.51	4	4
471039	2.4	90	580	1160	20	13.46	4	4
471070	2.6	90	430	1160	14	6.98	5	5
471071	2.6	90	580	1160	14	9.42	4	4
471040	2.8	90	430	1160	10	4.99	5	5
471041	2.8	90	580	1160	10	6.73	4	4
471042	3.2	140	580	1160	22	14.80	4	4
470319	3.6	140	580	1160	15	10.10	4	4
505604	4.1	140	580	1160	9	6.10	4	4

Timber frame

Product Code	R-Value (m^2K/W)	Thickness (mm)	Width (mm)	Length (mm)	Pieces per pack	Area per pack (m^2)	Packs per MasterBag	MasterBags per Supakube
529446	1.3	50	600	2700	20	32.40	4	4
529447	1.9	75	600	2700	14	22.68	4	4

Metal frame

with ECOSE® TECHNOLOGY

Earthwool® glasswool products made with ECOSE® Technology benefit from a no added formaldehyde binder, which is less energy intensive than traditional binders and is based on rapidly renewable, bio-based materials instead of petro-based chemicals. The technology has been developed for Knauf Insulation's glass and rock mineral wool products, enhancing their environmental credentials without affecting the thermal, acoustic or fire performance. Earthwool® glasswool products made with ECOSE® Technology contain no added dyes or artificial colours.

Knauf Insulation Ltd

PO Box 217 063, Botany Junction,
Auckland, 2013, New Zealand

Customer Service: Tel: 0800 562 834
Fax: +61 7 3902 0613

Technical Advisory Centre: tech.nz@knaufinsulation.com

All rights reserved, including those of photomechanical reproduction and storage in electronic media. Extreme caution was observed when putting together and processing the information, texts and illustrations in this document. Nevertheless, errors cannot quite be ruled out. The publisher and editors cannot assume legal responsibility or any liability whatever for incorrect information and the consequences thereof. The publisher and editors will be grateful for improvement suggestions and details of possible errors pointed out.

challenge.
create.
care.

KINZ0914114DS

Updated May 2020

KNAUFINSULATION

www.knaufinsulation.co.nz

EARTHWOOL® GLASSWOOL INSULATION: INTERNAL (ACOUSTIC) WALL

May 2019



with ECOSE® TECHNOLOGY

APPLICATIONS



DESCRIPTION

The Earthwool® glasswool insulation: internal (acoustic) wall batt range includes a selection of densities to provide builders, designers, installers and DIYers the opportunity to choose the best acoustic performance for their project. Earthwool® glasswool insulation: internal (acoustic) wall batt will improve the acoustic performance of the building in which it has been installed by absorbing the transfer of unwanted sound from external sources and between adjoining rooms. Super-soft to handle and install, Earthwool® glasswool insulation is made using up to 80% recycled glass and with ECOSE® Technology, a sustainable, bio-based binder that contains no added formaldehyde.

PERFORMANCE

Thermal	
Thermal conductivity: Thermal resistance:	ASTM C 518 and AS/NZS 4859.1: 2002. ASTM C 653 and AS/NZS 4859.1: 2002.
Fire Hazard Properties (AS/NZ 1530.3)	Ignitability: 0, Spread of Flame: 0, Heat Evolved: 0, Smoke Developed: 0-1.
Water Vapour Absorption	Less than 5% by weight.
Microbial Growth	Does not support microbial growth.
Corrosion Resistance	No greater than sterile cotton.
Combustibility (AS 1530.1)	Non-combustible.

BENEFITS

- Sound absorbing
- High thermal performance - year round comfort
- Non - combustible
- Saves energy - lower energy bills
- No added formaldehyde
- Soft to handle and install
- 50 year warranty
- Compression packed - more product per pack
- Odourless.

CERTIFICATION

CodeMark 30095

BRANZ Appraised Appraisal No.648 (2016) Wall, Ceiling and Acoustic

challenge. create. care.

KNAUFINSULATION

www.knaufinsulation.co.nz

EARTHWOOL® GLASSWOOL INSULATION: INTERNAL (ACOUSTIC) WALL

May 2019

ADDITIONAL INFORMATION

Specification Guide

The acoustic insulation shall be Earthwool® glasswool insulation: internal (acoustic) wall batt *kg/m^3, *mm thick, BRANZ appraised to meet the provisions of the NZBC. The product will be non-combustible, CFC/HCFC free, zero ODP and GWP, Global GreenTag Cert™ Level A certified, glasswool insulation with high post-consumer recycled glass content and with ECOSE® Technology. It will be manufactured under Quality Assurance Standards ISO 9001:2008 and ISO 14001:2004 by Knauf Insulation and shall be installed in accordance with the instructions issued by them.
*architect to insert details of products used.

Light Commercial Applications

Earthwool® glasswool insulation: internal (acoustic) wall batt is available in a range of thicknesses. Earthwool® glasswool insulation: internal (acoustic) wall batt can improve Rw ratings in wood stud construction by 3 to 5 points and in metal stud construction by 8 to 10 points, depending on the complexity of the wall configuration and the thickness/density. Earthwool® glasswool insulation: internal (acoustic) wall batt can be used for exterior and interior walls, floors, crawlspaces and a variety of ceiling applications.

Specification Compliance

AS/NZS 4859.1: 2002 Materials used in the Thermal Insulation of Buildings and comply with the Building Code of Australia (BCA) requirements: B2 - Durability, E3 - External Moisture, F2 - Hazardous Building Materials, and H1 - Energy Efficiency. The Earthwool® glasswool: internal (acoustic) wall batt range is an acceptable solution in terms of the New Zealand Building Code. This product is designed for use in timber and metal frame applications in new and existing domestic and commercial buildings.

Bio-solubility

The formulation used for Earthwool® glasswool insulation has been independently assessed to meet the requirements of the stringent Note Q standard (and is therefore consistent with the highest Australian and New Zealand industry standards), and also assessed by Knauf Insulation against the criteria of the Australian Safety and Compensation Council ASCC Approved Criteria for Classifying Hazardous Substances [NOHSC: 1008 3rd Edition]. As a result of this assessment, Earthwool® glasswool insulation is not classified as hazardous according to the NOHSC criteria.

Environmental

Earthwool® glasswool insulation: internal (acoustic) wall batt represents no known threat to the environment and have zero Ozone Depletion Potential and zero Global Warming Potential.

Proven Performance

- Preferred by professional installers concerned with quality, appearance and productivity.
- Excellent acoustical properties reduce sound transmission in the home when properly installed in walls, ceiling and floor systems.

Durability

- Earthwool® glasswool insulation is odourless, rot proof, non-hygroscopic, does not sustain vermin and will not encourage the growth of fungi, mould or bacteria.

Superior Handling

- Highly resilient insulation recovers quickly to full thickness for a snug fit and superior finished aesthetics.
- Consistent quality materials feel good, cut easily and install fast.
- Low dust for easier handling and increased productivity.

Convenient Packaging, Easier Handling

- Earthwool® glasswool insulation is packaged in a strong, white poly bag that offers excellent protection from abuse, dust and moisture.
- Earthwool® glasswool insulation packages feature easy to follow installation instructions.
- MasterBag insulation units (containing multiple packs) ensure reduced handling costs with improved compression – more square metres per bag, more square metres per truck load, fewer trips to the job site and less warehouse space for storage.

Superior Service and Support

- Knauf Insulation is focused on providing first class customer service, producing high quality product and 'in full on time' deliveries.
- Knauf Insulation recognises the need to establish, develop and support a professional network of distributors and re-sellers in order to service a growing insulation market.
- Knauf Insulation is committed to providing a comprehensive range of relevant sales and marketing literature and web-based technical information to support specifiers and customers.

KNAUFINSULATION

www.knaufinsulation.co.nz

EARTHWOOL® GLASSWOOL INSULATION: INTERNAL (ACOUSTIC) WALL

May 2019

SPECIFICATIONS

Product Code	R-Value (m^2K/W)	Density (kg/m^3)	Thickness (mm)	Width (mm)	Length (mm)	Pieces per Pack	Area per pack (m^2)
471045	1.4	14	50	580	1160	38	25.57
471049	2.0	14	75	580	1160	24	16.15
471070	2.6	20	90	430	1160	14	6.98
471071	2.6	20	90	580	1160	14	9.42
471040	2.8	27	90	430	1160	10	4.99
471041	2.8	27	90	580	1160	10	6.73

Timber frame

Product Code	R-Value (m^2K/W)	Density (kg/m^3)	Thickness (mm)	Width (mm)	Length (mm)	Pieces per Pack	Area per pack (m^2)
529446	1.3	11	50	600	2700	20	32.40
529447	1.9	11	75	600	2700	14	22.70

Metal frame

Product Code	R-Value (m^2K/W)	Density (kg/m^3)	Thickness (mm)	Width (mm)	Length (mm)	Pieces per Pack	Area per pack (m^2)
-	2.0	14	75	430	1160	24	11.97

Baffle stack

with ECOSE® TECHNOLOGY

Earthwool® glasswool products made with ECOSE® Technology benefit from a no added formaldehyde binder, which is less energy intensive than traditional binders and is based on rapidly renewable, bio-based materials instead of petro-based chemicals. The technology has been developed for Knauf Insulation's glass and rock mineral wool products, enhancing their environmental credentials without affecting the thermal, acoustic or fire performance. Earthwool® glasswool products made with ECOSE® Technology contain no added dyes or artificial colours.

Knauf Insulation Ltd

PO Box 217 063, Botany Junction,
Auckland, 2013, New Zealand

Customer Service: Tel: 0800 562 834
Fax: +61 7 3902 0613

Technical Advisory Centre: tech.nz@knaufinsulation.com

All rights reserved, including those of photomechanical reproduction and storage in electronic media. Extreme caution was observed when putting together and processing the information, texts and illustrations in this document. Nevertheless, errors cannot quite be ruled out. The publisher and editors cannot assume legal responsibility or any liability whatever for incorrect information and the consequences thereof. The publisher and editors will be grateful for improvement suggestions and details of possible errors pointed out.

challenge.
create.
care.

KINZ0914116DS

Updated June 2019

Earthwool® glasswool insulation acoustic batts

Product Technical Statement: 104858

miproducts
THE NATIONAL PRODUCT DATABASE

Earthwool® glasswool insulation: Acoustic batts provide high acoustic performance.
View miproducts listing

Level of assurance needed to demonstrate NZ Building Code Compliance
Supporting documentation should include self-assessment and technical information by manufacturer

LOW

Earthwool® glasswool insulation confirms that this minimum level of assurance has been met or exceeded by the following:
BRANZ Appraisal
648



masterspec partner

Company Contact Details

EARTHWOOL
the feel good glasswool insulation
GLASSWOOL

Brand:	Earthwool® glasswool insulation
Company:	Knauf Insulation New Zealand
Physical Address:	PO Box 217 063 Auckland
Postal Address:	PO Box 217 063 Botany Junction Auckland
Email:	tech.nz@knaufinsulation.com
Website:	http://www.knaufinsulation.co.nz

Technical Statement

Product Description

The Earthwool® glasswool insulation: Internal wall batt range is a new generation of softer, safer and more environmentally friendly glasswool insulation.

This specialist acoustic range of products is available in an Ultra Performance 14kg/m³ density.

Earthwool® glasswool insulation: Internal wall batts reduce unwanted noise from outside and also limit sound transmission from room to room or office to office.

E-Code	Density (kg/m³)	Thickness (mm)	R-Value (est)	Width (mm)	Length (mm)	m²/ Pack
E2890	14	50	1.4	430	1160	19.0
E2905	14	50	1.4	580	1160	25.6
E3094	14	75	2.0	430	1160	12.0
E3088	14	75	2.0	580	1160	16.2
E4332	20	90	2.6	430	1160	6.9
E4333	20	90	2.6	580	1160	9.4
E4473	27	90	2.8	430	1160	4.9
E4335	27	90	2.8	580	1160	6.7

Scope of use

Supply and install the selected Earthwool® glasswool insulation to walls, floors, ceilings, roofs and other areas as identified on the drawings, complete with accessories.

All aspects of this work shall be in complete accordance with Knauf Insulation product manuals and installation guides, (check www.knaufinsulation.co.nz, or call 0800 562 834 for the latest editions), Earthwool® glasswool insulation BRANZ Appraisal, other relevant product manufacturers' recommendations, and as shown on the drawings.

No substitutions are permitted for Earthwool® glasswool insulation.

New Zealand Building Code (NZBC)

The product will, if employed in accordance with the supplier's installation and maintenance requirements, assist with meeting the following provisions of the building code:

- **Clause B2 Durability:** Performance B2.3.1(a)
- **Clause E3 Internal moisture:** Performance E3.3.1
- **Clause F2 Hazardous building materials:** Performance F2.3.1
- **Clause H1 Energy efficiency :** Performance H1.3.1

Evidence

The product meets the requirements set out in the following documents, or relevant parts of cited standards within the documents:

Earthwool glasswool insulation is an Acceptable Solution in terms of New Zealand Building Code Compliance.

Earthwool glasswool insulation thermal resistance (R-value) has been determined by testing to AS/NZS 4859.1 which is an acceptable method.

Supporting Evidence

The product has and can make available the following additional evidence to support the above statements:

BRANZ Appraisal
648

Earthwool® glasswool insulation acoustic batts

Product Technical Statement: 104858

miproducts
THE NATIONAL PRODUCT DATABASE

Product Criteria

Design requirements

Earthwool glasswool insulation: Internal wall segments provide a cost-effective thermal and acoustic barrier for energy-efficient construction. The consistent quality, low dust, and clean-cutting resilient fibres make fabrication easy and installation fast. Earthwool glasswool insulation: Internal wall segments can be used in timber and metal frame applications in residential structures.

These applications include thermal and acoustic treatments to walls, ceilings and floors. Knauf Insulation offers Earthwool glasswool insulation: Internal wall segments in a wide range of sizes and R-values.

Earthwool glasswool insulation can be used for cavity walls, floors, ceilings, attics, basements and crawlspaces. It is highly resilient, recovering quickly to full thickness. It also greatly reduces the transmission of noise in the home.

Installation requirements

Installation of Earthwool glasswool insulation must be completed by an installer with an understanding of insulation installation, in accordance with the instructions given within the Technical Literature, Installation Instructions and BRANZ Appraisal.

Installation of Earthwool glasswool insulation must be in accordance with the Knauf Insulation's Technical Literature, Installation Instructions and BRANZ Appraisal. NZS 4246 should be used as a guide for installing insulation in residential buildings in New Zealand

The product must be installed only when the building is enclosed and when the construction materials have achieved the required maximum moisture content or less, to ensure the insulation does not become wet

Maintenance requirements

The building must be maintained weatherproof at all times.

If, during normal routine maintenance it is discovered that moisture has entered the building envelope, or that dampness has occurred because of leaking plumbing or some other source, then that source must be repaired immediately.

Wet or damp insulation must be removed and then replaced with new insulation of an equivalent acoustic rating. Cavities must be clean, dry and free of all contaminants and mould before fitting new insulation.

NZS 4246 Paragraph 3.3 gives guidance on thermal insulation maintenance due to water damage.

Company Product Information

Environmental

Earthwool glasswool insulation: Internal wall segments are free from CFCs, HCFCs and any other material with ozone depletion potential in its manufacture and content and represents no known threat to the environment.

Earthwool glasswool insulation: Internal wall segments' manufacture has a low impact on the environment and is classified as Zero ODP and Zero GWP.

Knauf Insulation mineral wool products with ECOSE Technology benefit from a revolutionary, bio-based, formaldehyde-free binder technology, based on rapidly renewable materials, instead of petro-based chemicals. It reduces embodied energy and delivers superior environmental sustainability.

The technology has been developed for Knauf Insulation's glass and rock mineral wool products, enhancing their environmental credentials without affecting the thermal, acoustic or fire performance. Insulation products made with ECOSE Technology contain no dye or artificial colours - the colour is completely natural.

Quality Assurance

ISO 9001 (Quality Management)

Relationships

Member of New Zealand Green Building Council

EcoSpecifier Global GreenTag Level A

Date last validated: **20 July 2018**

Date last updated: **20 July 2018**

Earthwool® glasswool insulation acoustic batts

Product Technical Statement: 104858

Disclaimer: The Product Technical Statement (PTS) template is copyright to Construction Information Limited. However the content of this PTS is the responsibility of the product manufacturer/supplier. Refer to the miproducts Terms and Conditions

Earthwool® glasswool insulation ceiling roll

Product Technical Statement: 104859

miproducts
THE NATIONAL PRODUCT DATABASE

Earthwool® glasswool is made using recycled glass and with ECOSE® Technology.
View miproducts listing

Level of assurance needed to demonstrate NZ Building Code Compliance
LOW
Supporting documentation should include self-assessment and technical information by manufacturer

Earthwool® glasswool insulation confirms that this minimum level of assurance has been met or exceeded by the following:
BRANZ Appraisal
648





masterspec partner

Company Contact Details

EARTHWOOL
the feel good glasswool insulation
GLASSWOOL

Brand:	Earthwool® glasswool insulation
Company:	Knauf Insulation New Zealand
Physical Address:	PO Box 217 063 Auckland
Postal Address:	PO Box 217 063 Botany Junction Auckland
Email:	tech.nz@knaufinsulation.com
Website:	http://www.knaufinsulation.co.nz

Technical Statement

Product Description

Earthwool® glasswool insulation: Ceiling roll is an ideal solution for thermal and acoustic insulation of both residential and commercial roofs.

Condensation control can be achieved when the product is faced with a foil of the appropriate duty classification.

E-Code	R-Value	Thickness (mm)	Width (mm)	Length (mm)	m²/Pack
E4487	1.8	70	1200	13,500	16.2
E4488	2.9	115	1200	8,500	10.2
E4489	3.2	135	1200	8,000	9.6
E4490	3.6	150	1200	7,000	8.4

Scope of use

Supply and install the selected Earthwool® glasswool insulation to walls, floors, ceilings, roofs and other areas as identified on the drawings, complete with accessories.

All aspects of this work shall be in complete accordance with Knauf Insulation product manuals and installation guides, (check www.knaufinsulation.co.nz, or call 0800 562 834 for the latest editions), Earthwool® glasswool insulation BRANZ Appraisal, other relevant product manufacturers' recommendations, and as shown on the drawings.

No substitutions are permitted for Earthwool® glasswool insulation.

New Zealand Building Code (NZBC)

The product will, if employed in accordance with the supplier's installation and maintenance requirements, assist with meeting the following provisions of the building code:

- **Clause B2 Durability:** Performance B2.3.1(a), B2.3.1(b)
- **Clause E3 Internal moisture:** Performance E3.3.1
- **Clause F2 Hazardous building materials:** Performance F2.3.1
- **Clause H1 Energy efficiency :** Performance H1.3.1, H1.3.2E

Evidence

The product meets the requirements set out in the following documents, or relevant parts of cited standards within the documents:

Earthwool glasswool insulation is an Acceptable Solution in terms of New Zealand Building Code Compliance.

Earthwool glasswool insulation thermal resistance (R-value) has been determined by testing to AS/NZS 4859.1 which is an acceptable method.

Supporting Evidence

The product has and can make available the following additional evidence to support the above statements:

BRANZ Appraisal
648

Product Criteria

Design requirements

Earthwool glasswool insulation: Roof blankets provide a cost-effective thermal and acoustic barrier for energy-efficient construction. The consistent quality, low dust, and clean-cutting

Earthwool® glasswool insulation ceiling roll

Product Technical Statement: 104859

miproducts
THE NATIONAL PRODUCT DATABASE

resilient fibres make fabrication easy and installation fast.

Earthwool glasswool insulation: Roof blankets can be used in timber and metal frame applications in residential structures. These applications include thermal and acoustic treatments to walls, ceilings and mid floors.

Knauf Insulation offers Earthwool glasswool insulation in a wide range of sizes and R-values. Earthwool glasswool insulation can be used for cavity walls, floors, ceilings, attics, basements and crawlspaces. It is highly resilient, recovering quickly to full thickness. It also greatly reduces the transmission of noise in the home.

Installation requirements

Installation of Earthwool glasswool insulation must be completed by an installer with an understanding of insulation installation, in accordance with the instructions given within the Technical Literature, Installation Instructions and BRANZ Appraisal.

Installation of Earthwool glasswool insulation must be in accordance with the Knauf Insulation's Technical Literature, Installation Instructions and BRANZ Appraisal.

NZS 4246 should be used as a guide for installing insulation in residential buildings in New Zealand.

The product must be installed only when the building is enclosed and when the construction materials have achieved the required maximum moisture content or less, to ensure the insulation does not become wet.

Maintenance requirements

The building must be maintained weatherproof at all times.

If, during normal routine maintenance it is discovered that moisture has entered the building envelope, or that dampness has occurred because of leaking plumbing or some other source, then that source must be repaired immediately.

Wet or damp insulation must be removed and then replaced with new insulation of an equivalent thermal rating.

Cavities must be clean, dry and free of all contaminants and mould before fitting new insulation.

NZS 4246 Paragraph 3.3 gives guidance on thermal insulation maintenance due to water damage.

Company Product Information

Environmental

Earthwool glasswool insulation: Roof blankets are free from CFCs, HCFCs and any other material with ozone depletion potential in its manufacture and content and represents no known threat to the environment.

Earthwool glasswool insulation: Roof blankets' manufacture has a low impact on the environment and is classified as Zero ODP and Zero GWP.

Knauf Insulation mineral wool products with ECOSE Technology benefit from a revolutionary, bio-based, formaldehyde-free binder technology, based on rapidly renewable materials, instead of petro-based chemicals. It reduces embodied energy and delivers superior environmental sustainability.

The technology has been developed for Knauf Insulation's glass and rock mineral wool products, enhancing their environmental credentials without affecting the thermal, acoustic or fire performance. Insulation products made with ECOSE Technology contain no dye or artificial colours - the colour is completely natural.

Quality Assurance

ISO 9001 (Quality Management)

Relationships

Member of New Zealand Green Building Council

EcoSpecifier Global GreenTag Level A

Date last validated: **20 July 2018**

Date last updated: **20 July 2018**

Disclaimer: The Product Technical Statement (PTS) template is copyright to Construction Information Limited. However the content of this PTS is the responsibility of the product manufacturer/supplier. Refer to the miproducts Terms and Conditions

Earthwool® glasswool insulation wall batts

Product Technical Statement: 104856

miproducts
THE NATIONAL PRODUCT DATABASE

Earthwool® glasswool is made using recycled glass and with ECOSE® Technology.
View miproducts listing

Level of assurance needed to demonstrate NZ Building Code Compliance
Supporting documentation should include self-assessment and technical information by manufacturer

LOW

Earthwool® glasswool insulation confirms that this minimum level of assurance has been met or exceeded by the following:
BRANZ Appraisal
648





masterspec partner

Technical Statement

Product Description

The Earthwool® glasswool insulation: External wall batt range is a new generation of softer, safer and more environmentally friendly glasswool insulation.

Advanced compression packaging reduces handling time and the risk of damage in transit and on-site. Although the product is primarily designed for use in external walls it can also be used for internal walls to reduce sound transmission from room to room.

It is thermally efficient and cost effective in saving energy and providing increased comfort in buildings.

Segments are the traditional insulation product for insulating external walls and are available in thicknesses to suit 90mm and 140mm timber and metal frames.

Unlike reflective foil, Earthwoo® glasswool insulation: External wall segments prevent heat gain in summer and heat loss in winter by countering convection, conduction and radiation.

E-code	R-Value	Thickness (mm)	Width (mm)	Length (mm)	m²/Pack
E4330	2.2	90	580	1160	19.5
E4727	2.4	90	580	1160	13.4
E4332	2.6	90	430	1160	7.0
E4333	2.6	90	580	1160	9.4
E4473	2.8	90	430	1160	5.0
E4335	2.8	90	580	1160	6.7
E4340	3.2	140	580	1160	14.8

Scope of use

Supply and install the selected Earthwool® glasswool insulation to walls, floors, ceilings, roofs and other areas as identified on the drawings, complete with accessories.

All aspects of this work shall be in complete accordance with Knauf Insulation product manuals and installation guides, (check www.knaufinsulation.co.nz, or call 0800 562 834 for the latest editions), Earthwool® glasswool insulation BRANZ Appraisal, other relevant product manufacturers' recommendations, and as shown on the drawings.

No substitutions are permitted for Earthwool® glasswool insulation.

New Zealand Building Code (NZBC)

The product will, if employed in accordance with the supplier's installation and maintenance requirements, assist with meeting the following provisions of the building code:

- **Clause B2 Durability:** Performance B2.3.1(a)
- **Clause E3 Internal moisture:** Performance E3.3.1
- **Clause F2 Hazardous building materials:** Performance F2.3.1
- **Clause H1 Energy efficiency :** Performance H1.3.1

Evidence

The product meets the requirements set out in the following documents, or relevant parts of cited standards within the documents:

Earthwool glasswool insulation is an Acceptable Solution in terms of New Zealand Building Code Compliance.

Earthwool glasswool insulation thermal resistance (R-value) has been determined by testing to AS/NZS 4859.1 which is an acceptable method.

Supporting Evidence

Company Contact Details

EARTHWOOL
the feel good glasswool insulation
GLASSWOOL

Brand:	Earthwool® glasswool insulation
Company:	Knauf Insulation New Zealand
Physical Address:	PO Box 217 063 Auckland
Postal Address:	PO Box 217 063 Botany Junction Auckland
Email:	tech.nz@knaufinsulation.com
Website:	http://www.knaufinsulation.co.nz

Earthwool® glasswool insulation wall batts

Product Technical Statement: 104856

miproducts
THE NATIONAL PRODUCT DATABASE

The product has and can make available the following additional evidence to support the above statements:

BRANZ Appraisal
648

Product Criteria

Design requirements

Earthwool glasswool insulation: External wall segments provide a cost-effective thermal and acoustic barrier for energy-efficient construction.

The consistent quality, low dust, and clean-cutting resilient fibres make fabrication easy and installation fast.

Earthwool glasswool insulation: External wall segments can be used in timber and metal frame applications in residential structures. These applications include thermal and acoustic treatments to walls, ceilings and floors.

Knauf Insulation offers Earthwool glasswool insulation: External wall segments in a wide range of sizes and R-values.

Earthwool glasswool insulation can be used for cavity walls, floors, ceilings, attics, basements and crawlspaces. It is highly resilient, recovering quickly to full thickness. It also greatly reduces the transmission of noise in the home.

Installation requirements

Installation of Earthwool glasswool insulation must be completed by an installer with an understanding of insulation installation, in accordance with the instructions given within the Technical Literature, Installation Instructions and BRANZ Appraisal.

Installation of Earthwool glasswool insulation must be in accordance with the Knauf Insulation's Technical Literature, Installation Instructions and BRANZ Appraisal.

NZS 4246 should be used as a guide for installing insulation in residential buildings in New Zealand

The product must be installed only when the building is enclosed and when the construction materials have achieved the required maximum moisture content or less, to ensure the insulation does not become wet

Maintenance requirements

The building must be maintained weatherproof at all times.

If, during normal routine maintenance it is discovered that moisture has entered the building envelope, or that dampness has occurred because of leaking plumbing or some other source, then that source must be repaired immediately.

Wet or damp insulation must be removed and then replaced with new insulation of an equivalent thermal rating.

Cavities must be clean, dry and free of all contaminants and mould before fitting new insulation.

NZS 4246 Paragraph 3.3 gives guidance on thermal insulation maintenance due to water damage.

Company Product Information

Environmental

Earthwool glasswool insulation: External wall segments are free from CFCs, HCFCs and any other material with ozone depletion potential in its manufacture and content and represents no known threat to the environment.

Earthwool glasswool insulation: External wall segments' manufacture has a low impact on the environment and is classified as Zero ODP and Zero GWP.

Knauf Insulation mineral wool products with ECOSE Technology benefit from a revolutionary, bio-based, formaldehyde-free binder technology, based on rapidly renewable materials, instead of petro-based chemicals. It reduces embodied energy and delivers superior environmental sustainability.

The technology has been developed for Knauf Insulation's glass and rock mineral wool products, enhancing their environmental credentials without affecting the thermal, acoustic or fire performance. Insulation products made with ECOSE Technology contain no dye or artificial colours - the colour is completely natural

Quality Assurance

ISO 9001 (Quality Management)

Relationships

Earthwool® glasswool insulation wall batts

Product Technical Statement: 104856

miproducts
THE NATIONAL PRODUCT DATABASE

Member of New Zealand Green Building Council

EcoSpecifier Global GreenTag Level A

Videos

Wall Installation Video

Date last validated: **20 July 2018**

Date last updated: **20 July 2018**

Disclaimer: The Product Technical Statement (PTS) template is copyright to Construction Information Limited. However the content of this PTS is the responsibility of the product manufacturer/supplier. Refer to the miproducts Terms and Conditions

KNAUF INSULATION

INSTALLATION INSTRUCTIONS

EARTHWOOL® GLASSWOOL INSULATION: CEILING

These instructions should be read in conjunction with local standards AS 3999 or NZS 4246 and all applicable local, state and federal building regulations. Before you start installing, please make sure you are familiar with our Health and Safety Information contained in this document. Ensure that you use tools and equipment that are suitable for the intended application. This will include suitable safety equipment.

Do not start work until the site is safe!

Assess the ceiling condition and structure together with the method of installation you are to use based on the appropriate requirements established in the building code, site assessment and or plans provided. Installation must be completed to the requirements of relevant standard: AS 3999 or NZS 4246.

Tools required:

- Sharp knife for trimming insulation
- Ladder
- Suitable clothing (see our Health and Safety Information)
- Tape measure
- Non-conductive insulation stick for positioning insulation in hard to reach areas
- Kneeling board to span ceiling framing

STEP 1

- Determine the most suitable product for your project. Ceilings can be insulated using blanket, rolls or segments.
- Where you have existing insulation that is level with the ceiling joists, you can install additional insulation over the top. It is recommended that this is installed at right angles to the existing insulation.
- Insulation is available in varying widths and thicknesses to suit most framing spaces. Please check Knauf Insulation's product guide for the most suitable product for your application.
- To calculate the number of packs needed, determine the area (m^2) to be insulated by multiplying the length by the width or wall height. The number of m^2 of insulation material is clearly marked on each pack. Divide the total area to be insulated by the m^2 in a pack to determine the number of packs required (don't forget to round up to the nearest whole pack). Allowances should be made for areas that are unable to be insulated.

STEP 2

- Don't take the insulation out of the packaging until you're in a position and ready to install.
- Before installation, gently agitate the insulation by gently shaking or bouncing it on its side until it recovers to the thickness stated on the label.
- Do not block ceiling vents and take care around downlights and other sources of heat. Consult the manufacturer's instructions for appropriate clearances. Additional guidance is provided in AS 3999 and NZS 4246.

STEP 3

- Start installing the insulation at the far corners of the ceiling and work your way back towards the ceiling access.
- When installing insulation between ceiling joists, ensure you achieve a snug fit, avoiding any gaps.
- When installing insulation in truss roofs, ensure that insulation is firmly butted together to achieve a consistent layer of insulation without any gaps.
- Where required, use a sharp knife to cut the insulation to fit. It is important that when you cut the insulation that you avoid coming into contact with any electrical services.
- When installing insulation in a roof eave (i.e. where the roof joins the ceiling), make sure the insulation covers the top plate but is not in contact with the roof. It is important to maintain a 20mm gap between the roofing substrate and the insulation.

STEP 4

- Complete the final check of the insulation ensuring all areas have been insulated and that you have an even and consistent layer of insulation.
- Finish your project by removing all packaging from the ceiling and disposing of all rubbish and excess insulation responsibly.

STEP 5

- Once you have worked your way back to the ceiling access, make sure you insulate the ceiling access panel before exiting the roof space.

We recommend that once completed another person checks the work to ensure it has been installed according to required standards.

HEALTH AND SAFETY INFORMATION

SAFETY WARNINGS AND HAZARDS

• You must turn the mains power "Off" before entering the work space, and, if in any doubt about how to turn the power "Off", you must consult a licensed electrician.
• Working in areas that contain live electrical wiring is extremely hazardous. Take extreme care to avoid touching any live overhead electrical lines, supply cables or any other live cables in the workspace.
• Defective electrical cables, exposed terminals and conductors of electrical equipment such as light fittings and fans can cause burns and electric shocks please exercise caution when working near such hazards – check with an electrician if you are unsure if the cabling is safe.
• Working in hot and poorly ventilated areas when installing insulation can be dangerous.
• Working at heights, when installing insulation can be dangerous.

BEFORE INSTALLATION

• You must turn the mains power "Off" and, if in any doubt about how to turn the power "Off", consult a licensed electrician.
• Do not enter the workspace for the purposes of the pre-work inspection or the installation until you are satisfied that the power has been isolated. Even after isolating the power via the switchboard there may still be an electrical mains cable in either the ceiling or underfloor space that is live.
• Complete a pre-work assessment before installation to identify safety hazards which may include but are not limited to the following:
    - o access to the roof area,
    - o working at heights,
    - o electrical safety hazards,
    - o adequate ventilation of the work area and
    - o nails and sharp objects on the ground

• Before commencing work you must have systems in place to reduce risks identified in the pre-work assessment such as but which are not limited to:
    - o systems to prevent falling when working at heights.
    - o ventilate the working area if possible.
    - o cover exposed skin. When working in an unventilated area, wear a disposable face mask.
    - o rinse hands in cold water before washing.
    - o wear goggles when working overhead.
    - o clean using vacuum equipment.

DURING INSTALLATION

• Work with another person and maintain contact throughout both the assessment and installation process.
• Only open bags as required.
• Wear appropriate clothing for the job such as long sleeved top, flat rubber sole shoes, gloves conforming to Australian Standard AS2161 and ventilated non-fogging dust resistant goggles conforming to AS/NZ 1336, and a P2 dust mask.
• Avoid eye contact with dust or fibres to minimise eye or skin contact and inhalation during handling.
• Avoid installing insulation in hot weather and at the hottest part of the day.
• Under no circumstances must fixing devices in ceiling spaces or under floors, or in proximity to electrical wiring, be of metal or other conductive material.

Proven Performance

• Preferred by professional installers concerned with quality, appearance and productivity.
• Excellent acoustical properties reduce sound transmission in the home when properly installed.

KNAUFINSULATION

HEALTH AND SAFETY INFORMATION

ELECTRICAL SAFETY CONSIDERATIONS BEFORE ISOLATING POWER

- Locate and review the incoming power supply, main switchboard and meter box.
- Ensure you understand if there is a main isolator and how power can be safely isolated.
- Ensure you understand the direction of the "On" and "Off" position of the main switch (NOTE: the "Off" position is not always as it seems - check with an electrician if you are unsure).
- Before installation, switch "Off" the electricity supply at the main switchboard (check with an electrician if you are unsure if power can be turned "Off" at the switchboard).
- Be aware that even after isolating the power via the switchboard there may still be an electrical mains cable in either the ceiling or underfloor space that is live. Take extreme care to avoid touching any live overhead electrical lines, supply cables or any other live cables in the workspace.

PROCEDURE FOR ISOLATION - CERAMIC FUSES (IF IN DOUBT YOU MUST CONSULT A LICENSED ELECTRICIAN)

- Ceramic fuses are typically found in older style homes.
- Identify if any fuse is deactivated.
- Check if there are any fuses currently in the "Off" position, take note of them.
- Place a strip of electrical tape over main switch isolator after it is turned "Off".
- Apply additional strips of electrical tape over the deactivated fuse and any individual isolator in the "Off" position as a reminder to leaving it in the "Off" position once the re-activation procedure has been completed.
- If you find a fuse plug out of its socket, whilst the main isolator is in the "Off" position, place electrical tape over its respective switch and one over the fuse socket opening.
- DO NOT touch the internal metal fittings.
- Place a written note on the main isolator switch or meter box enclosure to advise the power is "Off" and WORK IN PROGRESS is occurring.
- Check to ensure the lights and appliances, within the home, previously left on are no longer operating to confirm the mains power is now isolated.
- The original person who placed the isolation tag is the only one who can re-activate the power. Advise occupants of this requirement.

PROCEDURE FOR ISOLATION CIRCUIT BOARD (IF IN DOUBT YOU MUST CONSULT A LICENSED ELECTRICIAN)

- Circuit boards are typically found in modern homes.
- Check if there are any switches currently in the "Off" position, take note of them.
- Place a strip of electrical tape over main switch isolator after it is turned "Off".
- Apply additional strips of electrical tape over any deactivated fuses or individual switches in the "Off" position after isolating the mains power as a reminder to leave it in the "Off" position once the re-activation procedure has been completed.
- Turn "Off" all individual switches on the circuit board.
- Place a written note on the switches or meter box enclosure to advise the power is "Off" and WORK IN PROGRESS is occurring.
- Check to ensure the lights and appliances within the home previously left on are no longer operating to confirm the mains power is now isolated.
- The originator that placed the isolation tag is the only one who can re-activate the power. Advise occupants of the requirement.

REACTIVATING THE POWER

- After the completion of the installation, switch the mains power to the "On" position (for ceramic fuse board), but for a circuit board, switch the main power "On" and then each individual power isolator on one at a time. The taped switches in the "Off" position should stay switched "Off".
- WARNING: If you cannot reconnect power please ensure you seek assistance from a qualified electrician.

SUITABLE CLOTHING

- When handling any insulation material, especially in enclosed poorly ventilated areas and/or overhead, the use of suitable eye protection conforming to AS1336 will greatly reduce contact with dust or fibres.
- Wear suitable loose fitting clothes, including long sleeved shirts, long pants, cap and gloves.
- A suitable dust mask is recommended when working in confined, poorly ventilated and dusty areas.
- Wash work clothes separately and rinse the washing machine after use.

challenge.
create.
care.

KNAUF INSULATION

INSTALLATION INSTRUCTIONS

EARTHWOOL® GLASSWOOL INSULATION: CEILING

These instructions should be read in conjunction with local standards AS 3999 or NZS 4246 and all applicable local, state and federal building regulations. Before you start installing, please make sure you are familiar with our Health and Safety Information contained in this document. Ensure that you use tools and equipment that are suitable for the intended application. This will include suitable safety equipment.

Do not start work until the site is safe!

Assess the ceiling condition and structure together with the method of installation you are to use based on the appropriate requirements established in the building code, site assessment and or plans provided. Installation must be completed to the requirements of relevant standard: AS 3999 or NZS 4246.

Tools required:

- Sharp knife for trimming insulation
- Ladder
- Suitable clothing (see our Health and Safety Information)
- Tape measure
- Non-conductive insulation stick for positioning insulation in hard to reach areas
- Kneeling board to span ceiling framing

STEP 1

- Determine the most suitable product for your project. Ceilings can be insulated using blanket, rolls or segments.
- Where you have existing insulation that is level with the ceiling joists, you can install additional insulation over the top. It is recommended that this is installed at right angles to the existing insulation.
- Insulation is available in varying widths and thicknesses to suit most framing spaces. Please check Knauf Insulation's product guide for the most suitable product for your application.
- To calculate the number of packs needed, determine the area (m^2) to be insulated by multiplying the length by the width or wall height. The number of m^2 of insulation material is clearly marked on each pack. Divide the total area to be insulated by the m^2 in a pack to determine the number of packs required (don't forget to round up to the nearest whole pack). Allowances should be made for areas that are unable to be insulated.

STEP 2

- Don't take the insulation out of the packaging until you're in a position and ready to install.
- Before installation, gently agitate the insulation by gently shaking or bouncing it on its side until it recovers to the thickness stated on the label.
- Do not block ceiling vents and take care around downlights and other sources of heat. Consult the manufacturer's instructions for appropriate clearances. Additional guidance is provided in AS 3999 and NZS 4246.

STEP 3

- Start installing the insulation at the far corners of the ceiling and work your way back towards the ceiling access.
- When installing insulation between ceiling joists, ensure you achieve a snug fit, avoiding any gaps.
- When installing insulation in truss roofs, ensure that insulation is firmly butted together to achieve a consistent layer of insulation without any gaps.
- Where required, use a sharp knife to cut the insulation to fit. It is important that when you cut the insulation that you avoid coming into contact with any electrical services.
- When installing insulation in a roof eave (i.e. where the roof joins the ceiling), make sure the insulation covers the top plate but is not in contact with the roof. It is important to maintain a 20mm gap between the roofing substrate and the insulation.

STEP 4

- Complete the final check of the insulation ensuring all areas have been insulated and that you have an even and consistent layer of insulation.
- Finish your project by removing all packaging from the ceiling and disposing of all rubbish and excess insulation responsibly.

STEP 5

- Once you have worked your way back to the ceiling access, make sure you insulate the ceiling access panel before exiting the roof space.

We recommend that once completed another person checks the work to ensure it has been installed according to required standards.

HEALTH AND SAFETY INFORMATION

SAFETY WARNINGS AND HAZARDS

- You must turn the mains power "Off" before entering the work space, and, if in any doubt about how to turn the power "Off", you must consult a licensed electrician.
- Working in areas that contain live electrical wiring is extremely hazardous. Take extreme care to avoid touching any live overhead electrical lines, supply cables or any other live cables in the workspace.
- Defective electrical cables, exposed terminals and conductors of electrical equipment such as light fittings and fans can cause burns and electric shocks please exercise caution when working near such hazards – check with an electrician if you are unsure if the cabling is safe.
- Working in hot and poorly ventilated areas when installing insulation can be dangerous.
- Working at heights, when installing insulation can be dangerous.

BEFORE INSTALLATION

- You must turn the mains power "Off" and, if in any doubt about how to turn the power "Off", consult a licensed electrician.
- Do not enter the workspace for the purposes of the pre-work inspection or the installation until you are satisfied that the power has been isolated. Even after isolating the power via the switchboard there may still be an electrical mains cable in either the ceiling or underfloor space that is live.
- Complete a pre-work assessment before installation to identify safety hazards which may include but are not limited to the following:
    - o access to the roof area,
    - o working at heights,
    - o electrical safety hazards,
    - o adequate ventilation of the work area and
    - o nails and sharp objects on the ground

- Before commencing work you must have systems in place to reduce risks identified in the pre-work assessment such as but which are not limited to:
    - o systems to prevent falling when working at heights.
    - o ventilate the working area if possible.
    - o cover exposed skin. When working in an unventilated area, wear a disposable face mask.
    - o rinse hands in cold water before washing.
    - o wear goggles when working overhead.
    - o clean using vacuum equipment.

DURING INSTALLATION

- Work with another person and maintain contact throughout both the assessment and installation process.
- Only open bags as required.
- Wear appropriate clothing for the job such as long sleeved top, flat rubber sole shoes, gloves conforming to Australian Standard AS2161 and ventilated non-fogging dust resistant goggles conforming to AS/NZ 1336, and a P2 dust mask.
- Avoid eye contact with dust or fibres to minimise eye or skin contact and inhalation during handling.
- Avoid installing insulation in hot weather and at the hottest part of the day.
- Under no circumstances must fixing devices in ceiling spaces or under floors, or in proximity to electrical wiring, be of metal or other conductive material.

Proven Performance

- Preferred by professional installers concerned with quality, appearance and productivity.
- Excellent acoustical properties reduce sound transmission in the home when properly installed.

KNAUFINSULATION

HEALTH AND SAFETY INFORMATION

ELECTRICAL SAFETY CONSIDERATIONS BEFORE ISOLATING POWER

- Locate and review the incoming power supply, main switchboard and meter box.
- Ensure you understand if there is a main isolator and how power can be safely isolated.
- Ensure you understand the direction of the "On" and "Off" position of the main switch (NOTE: the "Off" position is not always as it seems - check with an electrician if you are unsure).
- Before installation, switch "Off" the electricity supply at the main switchboard (check with an electrician if you are unsure if power can be turned "Off" at the switchboard).
- Be aware that even after isolating the power via the switchboard there may still be an electrical mains cable in either the ceiling or underfloor space that is live. Take extreme care to avoid touching any live overhead electrical lines, supply cables or any other live cables in the workspace.

PROCEDURE FOR ISOLATION - CERAMIC FUSES (IF IN DOUBT YOU MUST CONSULT A LICENSED ELECTRICIAN)

- Ceramic fuses are typically found in older style homes.
- Identify if any fuse is deactivated.
- Check if there are any fuses currently in the "Off" position, take note of them.
- Place a strip of electrical tape over main switch isolator after it is turned "Off".
- Apply additional strips of electrical tape over the deactivated fuse and any individual isolator in the "Off" position as a reminder to leaving it in the "Off" position once the re-activation procedure has been completed.
- If you find a fuse plug out of its socket, whilst the main isolator is in the "Off" position, place electrical tape over its respective switch and one over the fuse socket opening.
- DO NOT touch the internal metal fittings.
- Place a written note on the main isolator switch or meter box enclosure to advise the power is "Off" and WORK IN PROGRESS is occurring.
- Check to ensure the lights and appliances, within the home, previously left on are no longer operating to confirm the mains power is now isolated.
- The original person who placed the isolation tag is the only one who can re-activate the power. Advise occupants of this requirement.

PROCEDURE FOR ISOLATION CIRCUIT BOARD (IF IN DOUBT YOU MUST CONSULT A LICENSED ELECTRICIAN)

- Circuit boards are typically found in modern homes.
- Check if there are any switches currently in the "Off" position, take note of them.
- Place a strip of electrical tape over main switch isolator after it is turned "Off".
- Apply additional strips of electrical tape over any deactivated fuses or individual switches in the "Off" position after isolating the mains power as a reminder to leave it in the "Off" position once the re-activation procedure has been completed.
- Turn "Off" all individual switches on the circuit board.
- Place a written note on the switches or meter box enclosure to advise the power is "Off" and WORK IN PROGRESS is occurring.
- Check to ensure the lights and appliances within the home previously left on are no longer operating to confirm the mains power is now isolated.
- The originator that placed the isolation tag is the only one who can re-activate the power. Advise occupants of the requirement.

REACTIVATING THE POWER

- After the completion of the installation, switch the mains power to the "On" position (for ceramic fuse board), but for a circuit board, switch the main power "On" and then each individual power isolator on one at a time. The taped switches in the "Off" position should stay switched "Off".
- WARNING: If you cannot reconnect power please ensure you seek assistance from a qualified electrician.

SUITABLE CLOTHING

- When handling any insulation material, especially in enclosed poorly ventilated areas and/or overhead, the use of suitable eye protection conforming to AS1336 will greatly reduce contact with dust or fibres.
- Wear suitable loose fitting clothes, including long sleeved shirts, long pants, cap and gloves.
- A suitable dust mask is recommended when working in confined, poorly ventilated and dusty areas.
- Wash work clothes separately and rinse the washing machine after use.

challenge.
create.
care.

KNAUF INSULATION

INSTALLATION INSTRUCTIONS

EARTHWOOL® GLASSWOOL INSULATION: WALL

These instructions should be read in conjunction with local standards AS 3999 or NZS 4246 and all applicable local, state and federal building regulations. Before you start installing, please make sure you are familiar with our Health and Safety Information contained in this document. Ensure that you use tools and equipment that are suitable for the intended application. This will include suitable safety equipment.

Do not start work until the site is safe!

Assess the wall condition and structure together with the method of installation you are to use based on the appropriate requirements established in the building code, site assessment and or plans provided. Installation must be completed to the requirements of relevant standard: AS 3999 or NZS 4246.

Tools required:

- Sharp knife for trimming insulation
- Ladder
- Suitable clothing (see our Health and Safety Information)
- Tape measure

STEP 1

- Determine the most suitable product for your project. Walls can be insulated using rolls or segments.
- Insulation is available in varying widths and thicknesses to suit most framing spaces. Please check Knauf Insulation's product guide for the most suitable product for your application.
- To calculate the number of packs needed, determine the area (m^2) to be insulated by multiplying the length by the width or wall height. The number of m^2 of insulation material is clearly marked on each pack. Divide the total area to be insulated by the m^2 in a pack to determine the number of packs required (don't forget to round up to the nearest whole pack). Allowances should be made for areas that are unable to be insulated.

STEP 2

- Don't take the insulation out of the packaging until you're in position and ready to install.
- Before installation check that the product selected matches the specification.
- Ensure that the insulation has lofted to the nominal thickness, if required, gently agitate the insulation by gently shaking or bouncing it on its side until it recovers to thickness stated on the label.
- Where installing around wall lights or heat sources consult the appliance manufacturer's instructions for appropriate clearances. Additional guidance is provided in AS 3999 and NZS 4246.

STEP 3

- When installing insulation between framing members, ensure that you achieve a snug fit avoiding any gaps, tucks and folds.
- It is recommended that you select products that have the same thickness as the cavity. In circumstances where the cavity is deeper than the product selected, adequate support must be provided.
- Make sure insulation fits snugly against top and bottom wall plates. The front face of the batt should be flush with the inside face of the framing.
- For metal frame walls, install insulation according to the relevant building code. Friction fit one side of the batt into the metal C-channel and butt the other edge against the metal stud. Install insulation to cover the full height of the wall.
- Use off cuts to insulate small and hard to fit areas.

STEP 4

- Attention to detail is very important. Make sure all areas are insulated, behind electrical outlets, plumbing and services.
- Seal all penetrations in exterior walls with insulation or foam sealants.

STEP 5

- Complete a final check of the installation ensuring all areas have been insulated and that you have an even and consistent layer of insulation.
- Finish your project by removing all packaging and disposing of all rubbish and excess insulation responsibly.

We recommend that once completed another person checks the work to ensure it has been installed according to required standards.

HEALTH AND SAFETY INFORMATION

SAFETY WARNINGS AND HAZARDS

- You must turn the mains power "Off" before entering the work space, and, if in any doubt about how to turn the power "Off", you must consult a licensed electrician.
- Working in areas that contain live electrical wiring is extremely hazardous. Take extreme care to avoid touching any live overhead electrical lines, supply cables or any other live cables in the workspace.
- Defective electrical cables, exposed terminals and conductors of electrical equipment such as light fittings and fans can cause burns and electric shocks please exercise caution when working near such hazards – check with an electrician if you are unsure if the cabling is safe.
- Working in hot and poorly ventilated areas when installing insulation can be dangerous.
- Working at heights, when installing insulation can be dangerous.

BEFORE INSTALLATION

- You must turn the mains power "Off" and, if in any doubt about how to turn the power "Off", consult a licensed electrician.
- Do not enter the workspace for the purposes of the pre-work inspection or the installation until you are satisfied that the power has been isolated. Even after isolating the power via the switchboard there may still be an electrical mains cable in either the ceiling or underfloor space that is live.
- Complete a pre-work assessment before installation to identify safety hazards which may include but are not limited to the following:
    - o access to the roof area,
    - o working at heights,
    - o electrical safety hazards,
    - o adequate ventilation of the work area and
    - o nails and sharp objects on the ground

- Before commencing work you must have systems in place to reduce risks identified in the pre-work assessment such as but which are not limited to:
    - o systems to prevent falling when working at heights.
    - o ventilate the working area if possible.
    - o cover exposed skin. When working in an unventilated area, wear a disposable face mask.
    - o rinse hands in cold water before washing.
    - o wear goggles when working overhead.
    - o clean using vacuum equipment.

DURING INSTALLATION

- Work with another person and maintain contact throughout both the assessment and installation process.
- Only open bags as required.
- Wear appropriate clothing for the job such as long sleeved top, flat rubber sole shoes, gloves conforming to Australian Standard AS2161 and ventilated non-fogging dust resistant goggles conforming to AS/NZ 1336, and a P2 dust mask.
- Avoid eye contact with dust or fibres to minimise eye or skin contact and inhalation during handling.
- Avoid installing insulation in hot weather and at the hottest part of the day.
- Under no circumstances must fixing devices in ceiling spaces or under floors, or in proximity to electrical wiring, be of metal or other conductive material.

Proven Performance

- Preferred by professional installers concerned with quality, appearance and productivity.
- Excellent acoustical properties reduce sound transmission in the home when properly installed.

KNAUFINSULATION

HEALTH AND SAFETY INFORMATION

ELECTRICAL SAFETY CONSIDERATIONS BEFORE ISOLATING POWER

- Locate and review the incoming power supply, main switchboard and meter box.
- Ensure you understand if there is a main isolator and how power can be safely isolated.
- Ensure you understand the direction of the "On" and "Off" position of the main switch (NOTE: the "Off" position is not always as it seems - check with an electrician if you are unsure).
- Before installation, switch "Off" the electricity supply at the main switchboard (check with an electrician if you are unsure if power can be turned "Off" at the switchboard).
- Be aware that even after isolating the power via the switchboard there may still be an electrical mains cable in either the ceiling or underfloor space that is live. Take extreme care to avoid touching any live overhead electrical lines, supply cables or any other live cables in the workspace.

PROCEDURE FOR ISOLATION - CERAMIC FUSES (IF IN DOUBT YOU MUST CONSULT A LICENSED ELECTRICIAN)

- Ceramic fuses are typically found in older style homes.
- Identify if any fuse is deactivated.
- Check if there are any fuses currently in the "Off" position, take note of them.
- Place a strip of electrical tape over main switch isolator after it is turned "Off".
- Apply additional strips of electrical tape over the deactivated fuse and any individual isolator in the "Off" position as a reminder to leaving it in the "Off" position once the re-activation procedure has been completed.
- If you find a fuse plug out of its socket, whilst the main isolator is in the "Off" position, place electrical tape over its respective switch and one over the fuse socket opening.
- DO NOT touch the internal metal fittings.
- Place a written note on the main isolator switch or meter box enclosure to advise the power is "Off" and WORK IN PROGRESS is occurring.
- Check to ensure the lights and appliances, within the home, previously left on are no longer operating to confirm the mains power is now isolated.
- The original person who placed the isolation tag is the only one who can re-activate the power. Advise occupants of this requirement.

PROCEDURE FOR ISOLATION CIRCUIT BOARD (IF IN DOUBT YOU MUST CONSULT A LICENSED ELECTRICIAN)

- Circuit boards are typically found in modern homes.
- Check if there are any switches currently in the "Off" position, take note of them.
- Place a strip of electrical tape over main switch isolator after it is turned "Off".
- Apply additional strips of electrical tape over any deactivated fuses or individual switches in the "Off" position after isolating the mains power as a reminder to leave it in the "Off" position once the re-activation procedure has been completed.
- Turn "Off" all individual switches on the circuit board.
- Place a written note on the switches or meter box enclosure to advise the power is "Off" and WORK IN PROGRESS is occurring.
- Check to ensure the lights and appliances within the home previously left on are no longer operating to confirm the mains power is now isolated.
- The originator that placed the isolation tag is the only one who can re-activate the power. Advise occupants of the requirement.

REACTIVATING THE POWER

- After the completion of the installation, switch the mains power to the "On" position (for ceramic fuse board), but for a circuit board, switch the main power "On" and then each individual power isolator on one at a time. The taped switches in the "Off" position should stay switched "Off".
- WARNING: If you cannot reconnect power please ensure you seek assistance from a qualified electrician.

SUITABLE CLOTHING

- When handling any insulation material, especially in enclosed poorly ventilated areas and/or overhead, the use of suitable eye protection conforming to AS1336 will greatly reduce contact with dust or fibres.
- Wear suitable loose fitting clothes, including long sleeved shirts, long pants, cap and gloves.
- A suitable dust mask is recommended when working in confined, poorly ventilated and dusty areas.
- Wash work clothes separately and rinse the washing machine after use.

challenge.
create.
care.

5113G GIB Plasterboard Linings

Winstone Wallboards Ltd
+64 09 6330100
info@gib.co.nz
www.gib.co.nz

SUPPORTING DOCUMENTS

BRANZ Appraisal 928 (2016) GIB Ezybrace® Systems 2016

Ref 10727. Uploaded 17 Aug 2020

Purpose: Performance

GIB EzyBrace® Systems

Ref 11539. Uploaded 1 Sep 2020

Purpose: Installation, Maintenance

GIB Standard Plasterboard 101955

Ref 10140. Uploaded 26 Jun 2020

Purpose: Installation

GIB® Goldline™

Ref 11554. Uploaded 1 Sep 2020

Purpose: Installation, Maintenance

GIB® Product and System Warranty

Ref 11092. Uploaded 27 Aug 2020

Purpose: Warranty

GIB® Rondo® Metal Batten Systems

Ref 11551. Uploaded 1 Sep 2020

Purpose: Installation, Maintenance

GIB® Site Guide

Ref 11079. Uploaded 27 Aug 2020

Purpose: Installation, Maintenance

BRANZ Appraised
Appraisal No. 928 [2016]

GIB EZYBRACE® SYSTEMS 2016

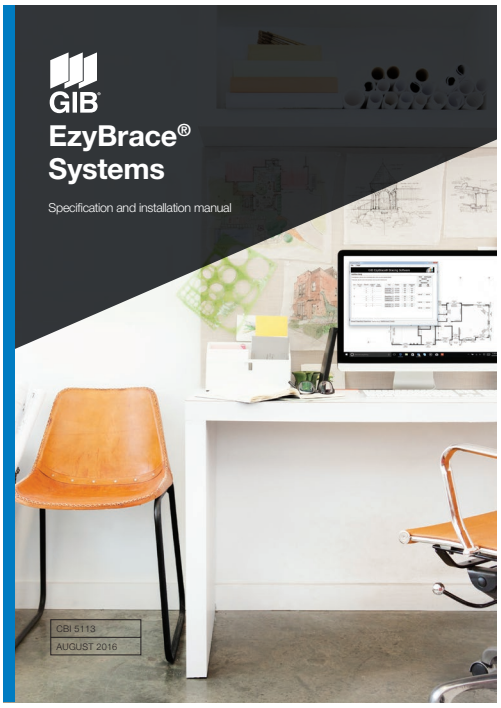

Appraisal No. 928 (2016)

BRANZ Appraisals

Technical Assessments of products for building and construction.

Winstone Wallboards Ltd
P O Box 12 256
Penrose
Auckland 1642
Tel: 09 633 0100
Fax: 09 633 0101
Helpline Tel: 0800 100 442
Helpline Fax: 0800 229 222
Web: www.gib.co.nz
Email: info@gib.co.nz

BRANZ
1222 Moonshine Rd,
RD1, Porirua 5381
Private Bag 50 908
Porirua 5240,
New Zealand
Tel: 04 237 1170
branz.co.nz

Product

1.1 GIB EzyBrace® Systems 2016 are a range of wall and ceiling bracing systems based on the use of GIB® Standard, GIB Braceline® and other GIB® plasterboards. GIB EzyBrace® Systems 2016 are used to resist earthquake and wind loads on timber frame buildings designed and constructed in accordance with NZS 3604 and the GIBFix® Framing System. The GIB EzyBrace® Bracing Software provides an electronic means of calculating bracing demand and resistance.

Scope

2.1 GIB EzyBrace® Systems 2016 and the GIB EzyBrace® Bracing Software have been appraised for the design and use of interior wall and ceiling bracing systems in buildings within the scope limitations of NZS 3604.

Building Regulations

New Zealand Building Code (NZBC)

3.1 **In the opinion of BRANZ, the GIB EzyBrace® Systems 2016, if designed, used, installed and maintained in accordance with the statements and conditions of this Appraisal, will meet the following provisions of the NZBC:**

Clause B1 STRUCTURE: Performance B1.3.1, B1.3.2 and B1.3.4. GIB EzyBrace® Systems 2016 meet the requirements for loads arising from self-weight, earthquake, wind and impact [i.e. B1.3.3 (a), (f), (h) and (j)]. See Paragraphs 8.1 - 8.10.

Clause B2 DURABILITY: Performance B2.3.1 (a) not less than 50 years. GIB EzyBrace® Systems 2016 meet this requirement. See Paragraphs 9.1 - 9.4.

Clause F2 HAZARDOUS BUILDING MATERIALS: Performance F2.3.1. GIB EzyBrace® Systems 2016 meet this requirement and will not present a health hazard to people.

3.2 The bracing demand calculation and bracing distribution rules contained in the GIB EzyBrace® Bracing Software are in accordance with Section 5 of NZS 3604. Bracing resistance is provided by bracing element ratings determined in accordance with NZS 3604, Paragraph 8.3.1.2.

3.3 NZS 3604 is an **Acceptable Solution** for compliance with New Zealand Building Code Clause B1 Structure.

Readers are advised to check the validity of this Appraisal by referring to the Valid Appraisals listing on the BRANZ website, or by contacting BRANZ.

Technical Specification

4.1 The GIB® plasterboards and accessories used with the GIB EzyBrace® Systems 2016, and supplied or specified by Winstone Wallboards Ltd are as follows:

GIB® plasterboards

- **GIB® Standard** - GIB® Standard plasterboard is a paper-bound fibreglass reinforced gypsum-plaster core sheet lining material. GIB® Standard plasterboard is available in 10 mm and 13 mm thicknesses and a sheet width of 1200 mm and 1350 mm (GIB® Wideline). The sheets have a taper on the two long sheet edges. The 10 mm thick sheets are also available with a square edge. Sheets are available in various lengths from 2400 mm to 6000 mm. The nominal sheet weight is 6.5 kg/m² for 10 mm thick sheets and 8.5 kg/m² for 13 mm thick sheets. GIB® Standard plasterboard face paper is a light buff colour.
- **GIB Braceline®** - GIB Braceline® is a high-density fibreglass reinforced paper-bound gypsum-plaster core sheet lining material. GIB Braceline® is available in 10 mm and 13 mm thicknesses. The sheets have a taper on the two long sheet edges. GIB Braceline® has a sheet width of 1200 mm and 1350 mm, and is available in lengths of 2400 mm, 2700 mm, 3000 mm, 3600 mm and 4800 mm. The nominal sheet weight is 9 kg/m² for 10 mm thick sheets and 12.5 kg/m² for 13 mm thick sheets. GIB Braceline® face paper is a light blue in colour.
- **Alternative GIB® plasterboards** - In certain situations, as specified in the Technical Literature, substitution is permitted with GIB Aqualine®, GIB Fyreline®, GIB Toughline® and GIB Ultraline®.

Components and Accessories

- **GIB® Accessories and GIB® Jointing Compounds** - As specified in the GIB® Site Guide Technical Literature.
- **Fasteners**
  - **GIB Grabber® High Thread Screws for fixing directly to timber** – 32 mm x 6g.
  - **GIB Nail** – 30 x 2.8 mm.
  - **GIB Grabber® screws for fixing to light gauge steel battens** – 32 mm x 6g.
- **Adhesive and Sealants**
  - **GIBFix® One** – an off-white acrylic adhesive supplied in 375 ml cartridges and 600 ml sausages.
  - **GIBFix® All-Bond** – a green solvent-based adhesive supplied in 375 ml cartridges and 600 ml sausages.
- **GIBFix® Framing Components**
  - **GIBFix® Angle** – 45 x 45 x 0.55 mm galvanised steel angle with a knurled surface. Supplied in lengths of 2.4 and 2.7 m.
  - **GIB Grabber® Dual Thread Screws for fixing to timber through GIBFix® Angle** – 32 mm x 7g needle-point screw with coarse thread lower section and fine thread upper section.
- **Fasteners, Anchors and Connections**
  - **GIB® HandiBrac®** – a one-piece, 2 mm thick, galvanised-steel angle bracket approximately 95 mm high, 65 mm long and 54 mm wide. The bracket is supplied with 5 Type 17 screws 14 g x 35 mm.
  - **BOWMAC® screw bolt** – M10 x 140 mm screw anchor, with a blue painted hex-head.
  - **Coach screws** – 12 mm x 150 mm and 50 x 50 x 3 mm washer hot-dipped galvanised for fixing to timber floors.
  - **Cast-in bolts** – M12 x 150 mm minimum and 50 x 50 x 3 mm washers for fixing to concrete floors.
  - **Shot fired fasteners** – minimum 75 mm x 3.8 mm with 16 mm discs for fixing GS1-N, GS2-N and GS2-NOM internal line bracing elements to concrete slabs.
  - **Galvanised or stainless steel strap** – 25 x 0.9 mm top and bottom plate connections.
  - **Strap fixings** – 30 x 2.5 mm hot-dipped galvanised or stainless-steel flat-head nails.

  Note: For corrosion protection requirements refer to NZS 3604: 2011 Section 4.

Readers are advised to check the validity of this Appraisal by referring to the Valid Appraisals listing on the BRANZ website, or by contacting BRANZ.

- **Ceiling Diaphragms** - Ceiling diaphragms are constructed using timber ceiling battens, or GIB® Rondo® or similar metal ceiling batten systems.
- **Plywood**
  - **Plywood** – minimum of 7 mm thick complying with AS/NZS 2269 D-D Structural Grade.
  - **Plywood fixings** – 50 x 2.5 mm hot-dipped galvanised or stainless-steel annular-grooved, flat-head nails.

Handling and Storage

5.1 The best results are achieved when GIB® plasterboards are treated as a finishing material and protected from damage. Sheets must be stacked flat and kept dry at all times. For limits on stack heights see the GIB® Site Guide. Sheets must be carried on edge and not dragged.

5.2 All accessories must be kept dry.

Technical Literature

6.1 Refer to the Appraisals listing on the BRANZ website for details of the current Technical Literature for GIB EzyBrace® Systems 2016. The Technical Literature must be read in conjunction with this Appraisal. All aspects of design, use, installation and maintenance contained in the Technical Literature and within the scope of this Appraisal must be followed.

Design Information

General

7.1 NZS 3604 provides methods to distribute the bracing elements in walls to resist forces. The use of ceiling diaphragms is defined in the Technical Literature.

7.2 GIB EzyBrace® Systems 2016 are for use in dry, internal situations only.

7.3 GIB EzyBrace® Systems 2016 must not be exposed to temperatures of 52°C or greater for prolonged periods. Refer to appliance and fitting manufacturers for installation details.

GIB EzyBrace® Bracing Software

7.4 The GIB EzyBrace® Bracing Software contains design procedures and an electronic calculation method for bracing demand calculated in accordance with NZS 3604: 2011, Section 5. Floor loadings can be selected in accordance with either NZS 3604, Bracing Demand Tables 5.5 – 5.10 for 2 kPa floor loads or less, or Tables 14.1 – 14.3 for 3 kPa floor loads.

7.5 The bracing demand calculations contained in the GIB EzyBrace® Bracing Software are based on first principles engineering and calculate wind and earthquake demand based on the building parameters entered. Resulting bracing demand calculations are project specific and can differ from values derived using NZS 3604 wind and earthquake demand tables. The GIB EzyBrace® Bracing Software has been assessed as part of this Appraisal.

7.6 The bracing ratings for GIB EzyBrace® Systems 2016 are embedded in the GIB EzyBrace® Bracing Software.

GIBFix® Framing System

7.7 The GIBFix® Framing System utilises GIBFix® Angles fixed at internal corners and at wall/ceiling junctions to reduce the potential for fastener 'popping' and joint cracking due to timber framing movement. The GIBFix® Framing System also offers an alternative arrangement of studs at corners and at intersecting walls to improve insulation and to reduce thermal bridging compared to traditional wall framing layouts. Refer to the Technical Literature for full details.

7.8 Where walls intersect, noggings are required at maximum 900 mm centres to enable fixing of the end stud of the intersecting wall to the main wall framing.

7.9 The GIBFix® Framing System permits the use of a single panel hold-down [e.g. GIB® HandiBrac®] at wall corners and T-intersections for both the across and along bracing directions.

Readers are advised to check the validity of this Appraisal by referring to the Valid Appraisals listing on the BRANZ website, or by contacting BRANZ.

Framing

7.10 GIB EzyBrace® Systems 2016 can be installed using conventional timber framing layouts or by using the layouts provided in the GIBFix® Framing System. The bracing ratings embedded in the GIB EzyBrace® Bracing Software are equally applicable to both framing options.

7.11 Timber framing grade, spacing and construction must comply with NZS 3604. Timber treatment must comply with NZBC Acceptable Solution B2/AS1.

7.12 Winstone Wallboards Ltd recommends the use of kiln-dried stress-graded framing timber. The minimum actual framing dimensions are 90 x 45 mm for external walls and 75 x 45 mm for internal walls.

7.13 Joints in the top plates of bracing panels must be tied together with 3 kN and 6 kN top plate connectors using 25 x 0.9 mm hot-dip galvanised mild steel strap, 3 nails each side of joint for 3 kN and 6 nails each side of joint for 6 kN.

Bracing System GS2-NOM

7.14 Most GIB EzyBrace® Systems require additional fasteners at the corners to achieve the published bracing ratings. The GS2-NOM system only requires fixings at 300 mm centres around the sheet perimeter.

7.15 Where internal doors penetrate a GS2-NOM bracing element and recessed door jambs are used, the sheets may be adhesive fixed around the door opening with GIBFix® All-Bond, instead of screw fixing. This is designed to reduce fastener 'popping' around internal doors when using grooved door frames. Screw fixing should be used where door frames are to be finished with architraves and the architrave will cover the screws. The adhesive fix option around door openings must not be used with any other GIB EzyBrace® Systems 2016.

Alternative GIB® plasterboards

7.16 On occasions, properties additional to bracing may be required of the plasterboard lining. Refer to Table 1.

BOWMAC Screw Bolts

7.17 When BOWMAC Screw Bolts are used as fixings for external walls with concrete masonry header block foundations, the minimum grout/concrete strength must be as specified in NZS 3604. BOWMAC Screw Bolts may be used in Corrosion Zones B and C as defined in NZS 3604. BOWMAC Screw Bolts may only be used in NZS 3604 Corrosion Zone D where the minimum concrete cover to the bolt is 60 mm. This cannot be achieved with standard 90 mm wide timber framing. An alternative option in this scenario is to use 140 mm wide framing.

Table 1: Permitted Alternatives in GIB EzyBrace® Systems

PERMITTED GIB® plasterboard ALTERNATIVES IN GIB EZYBRACE® SYSTEMS 2016									
GIB Ezybrace® Systems 2016 have been designed and tested using only the products specified. Occasionally additional properties may be required to be provided by a different GIB® plasterboard product. The following table provides acceptable alternative options.									
Specified	**Permitted alternative GIB® plasterboard products**								
GIB® plasterboard	GIB® Standard	GIB Ultraline®	GIB Braceline/ Noiseline®	GIB Aqualine®	GIB Toughline®	GIB Fyreline®			
						10mm	13mm	16mm	19mm
GIB® Standard	N/A	✓	✓	✓	✓	✓ NOTE 1	✓NOTE 1 and 3		
GIB Braceline®	X	X	N/A	✓ NOTE 2	✓	X	✓NOTES 1, 2 and 3		

- **NOTE 1:** *The fastener type and length and must be as required for the relevant FRR, system but the fixing pattern must be as required for bracing elements.*
- **NOTE 2:** *The bracing element must be 900 mm or longer. Fasteners must be at maximum 100 mm centres to the perimeter of the bracing element. The bracing corner fastening pattern applies to all four corners of the element.*
- **NOTE 3:** *Specify traditional wall framing layout where a Fire Resistance Rating (FRR) is required. See Paragraph 11.4.*

Readers are advised to check the validity of this Appraisal by referring to the Valid Appraisals listing on the BRANZ website, or by contacting BRANZ.

Structure

Bracing

8.1 The bracing unit (BU) ratings embedded in the GIB EzyBrace® Bracing Software and vary with the wall length.

8.2 The Technical Literature provides comprehensive construction and panel hold-down details. These include bottom plate fixings using anchor screws and cast-in bolts (concrete), coach screws (timber), GIB® HandiBrac® or nailed stud-to-plate straps.

8.3 The bracing units are derived from BRANZ P21 test method based on a wall height of 2.4 m. For greater wall heights the bracing rating is calculated by multiplying the appropriate bracing rating shown in Table 1 by a factor f=2.4 and divided by the wall height in metres. Walls lower than 2.4 m shall be rated as if they were 2.4 m high.

8.4 NZS 3604 limits wall bracing elements to a maximum of 120 BU/m for timber-framed floors and 150 BU/m for concrete floors.

Ceiling Diaphragms

8.5 GIB® ceiling diaphragms are used to space bracing lines further apart than 6 m. The basic shape of a ceiling diaphragm must be square or rectangular and the length must not exceed twice the width.

8.6 For ceiling diaphragms not steeper than 15° and not exceeding 7.5 m in length, any GIB® plasterboard may be used provided the perimeter fixing are at 150 mm centres.

8.7 For ceiling diaphragms not steeper than 45° and not exceeding 7.5 m in length, and for diaphragms not steeper than 25° and not exceeding 12 m in length, any GIB® plasterboard may be used provided the perimeter fixings are at 100 mm centres.

Openings in Bracing Elements

8.8 Small openings of 90 x 90 mm or less may be placed anywhere except within 90 mm of the edge of the bracing element.

Shower Areas

8.9 GIB EzyBrace® Systems 2016 must not be located in shower cubicles or behind baths and the like. GIB EzyBrace® Systems 2016 may be used in water-splash areas provided they are protected as required by NZBC Clause E3 Internal Moisture. Refer GIB Aqualine® Wet Area Systems.

Impact Resistance

8.10 GIB® plasterboards provide adequate resistance to soft body impact, based upon history of use in domestic and light commercial applications.

Durability

9.1 GIB EzyBrace® Systems 2016, including linings and their fixings have a serviceable life of at least 50 years. The ability of the systems to remain durable is dependent on them remaining dry in service, and being maintained in accordance with this Appraisal.

Maintenance

9.2 The building must be maintained weatherproof and GIB® plasterboards must be protected from external and internal moisture in accordance with NZBC Clauses E2 and E3.

9.3 Holes resulting from damage to the lining, up to 100 x 100 mm square, will have no significant effect on the performance of the bracing panel. Such holes may be repaired by patching, stopping and finishing as appropriate. Independent expert advice must be sought to assess the effect and repair of larger areas of damage.

9.4 Bracing elements require no ongoing maintenance, apart from decoration and the repair of any damage.

Readers are advised to check the validity of this Appraisal by referring to the Valid Appraisals listing on the BRANZ website, or by contacting BRANZ.

Prevention of Fire Occurring

10.1 Separation or protection must be provided to GIB® plasterboard from heat sources such as fire places, heating appliances, flues and chimneys. Part 7 of NZBC Acceptable Solutions C/AS1 – C/AS6 and NZBC Verification Method C/VM1 provide methods for separation and protection of combustible materials from heat sources.

Fire Affecting Areas Beyond the Fire Source

11.1 For Internal Surface Finish properties and Fire Resistance Ratings, refer to BRANZ Appraisal No. 289 [2012] GIB® Fire Rated Systems.

Internal Moisture

12.1 GIB® plasterboard must be used in dry internal situations, and must not be used where likely to be exposed to liquid water, or where extended exposure to humidity above 90% RH is expected, e.g., such as may be expected in sauna rooms, commercial kitchens and the like.

Installation Information

Installation Skill Level Requirement

13.1 Installation of GIB EzyBrace® Systems 2016 must be completed by, or under the supervision of a Licensed Building Practitioner with the relevant Licence Class, in accordance with the Technical Literature and this Appraisal.

General

14.1 GIB EzyBrace® Systems 2016 must be installed in accordance with the Technical Literature. For inspection, reference must be made to the Technical Literature.

Framing

14.2 To achieve an acceptable decorative finish, the GIB® Site Guide specifies that walls must not be lined unless the moisture content of timber framing is less than 18%. Winstone Wallboards Ltd recommends a moisture content of 12% or less where buildings are to be air conditioned, centrally heated or have heat pumps installed.

14.3 Where the GIBFix® Framing System is used, GIBFix® Angles are tacked to the framing with flat-head clouts prior to installation of the GIB® plasterboard.

Cutting

14.4 GIB® plasterboard is easily cut by scoring the face paper with a sharp short-bladed trimming knife, and then snapping the plasterboard away from the cut face and cutting the back paper or by sawing. Use of a metal straightedge facilitates clean straight cuts. Cut edges can be tidied up by using a knife. Paper dags should be removed.

Hold-downs

14.5 GIB EzyBrace® Systems 2016 which require hold-downs must either have a GIB® Handibrac® fitted to each end of the bracing element or alternatively a metal stud-to-plate strap and hold-down anchor may be used. Refer to the Technical Literature for full installation details. Where a metal stud-to-plate strap is used, the hold-down anchor must be placed no more than 80 mm from the end of the bracing element.

14.6 Where the GIBFix® Framing System is used, a single hold-down located at a wall intersection may be used to provide the hold-down in both the across and along bracing directions.

Readers are advised to check the validity of this Appraisal by referring to the Valid Appraisals listing on the BRANZ website, or by contacting BRANZ.

Plasterboard Sheet Fixing

14.7 Corner fixings must be 50 mm away from the sheet corner. Fixings must be no closer than 12 mm from the paper-bound sheet edge, and no closer than 18 mm from a cut edge, and driven at right angles to the sheet until the head is seated in a slight dimple just below the surface of the paper liner. Fixings must not be over-driven.

14.8 Wall bracing plasterboards (except for those used with the GS2-NOM system) are fixed at 150 mm centres around the perimeter framing of the bracing element *(Note variation for GIB Aqualine® and GIB Fyreline® - see Table 1)*. At the corners of the wall bracing elements, a special fastening pattern is required with fasteners spaced at 50 mm, 100 mm, 150 mm, 225 mm and 300 mm from the corner and there-after at 150 mm centres. Fixing to other framing is either mechanical or by using GIBFix® adhesives.

14.9 When installing GS2-NOM bracing elements, the GIB® plasterboard is fixed to framing around the bracing element perimeter and at sheet joints with fasteners at maximum 300 mm centres. Where recessed door jambs are used on internal door frames, the GIB® plasterboard may be fixed to the framing around the door opening with GIBFix® All-Bond. See Paragraph 7.15.

14.10 Where GIB Aqualine® or GIB Fyreline® substitutes for GIB Braceline®, bracing elements must be longer than 900 mm and the bracing element perimeter fasteners must be spaced at 100 mm centres and the corner pattern described in Paragraph 14.8 used.

14.11 Full sheets must be used wherever possible.

Fire Resistance Rated Bracing Elements

14.12 Where a bracing element is also used as a fire-rated element, the method of fixing (including the length of the fixing specified) for the fire-rated element must be used, but the perimeter fixings of the bracing element must be at 150 mm centres and fixings at corners of the bracing element must be fixed as described in Paragraph 14.8. In two-layer systems the inner layer must be used for bracing.

Plywood Fixing

14.13 Plywood is nail fixed at 150 mm centres around the perimeter of each sheet and at 300 mm centres to intermediate framing.

Ceiling Diaphragms

14.14 All GIB EzyBrace® System 2016 ceiling diaphragms require fixings around the perimeter at 100 or 150 mm centres, depending on the ceiling pitch and length. See Paragraphs 8.4 to 8.6 and refer to the Technical Literature.

14.15 The perimeter of the ceiling diaphragm is fixed to GIBFix® Angles, GIB® Rondo® perimeter channels, or alternatively, to an additional ex 150 x 40 mm timber plate fixed to the top plate.

Jointing and Finishing

14.16 All bracing element joints must be reinforced with GIB® tape and finished in accordance with the GIB® Site Guide.

Health and Safety

15.1 Dust resulting from the sanding of stopping and finishing compounds may be a respiratory irritant, and the use of a suitable facemask is recommended.

Readers are advised to check the validity of this Appraisal by referring to the Valid Appraisals listing on the BRANZ website, or by contacting BRANZ.

Basis of Appraisal

The following is a summary of the technical investigations carried out:

Tests

16.1 Bracing tests were carried out by Winstone Wallboards Ltd in accordance with BRANZ Technical Paper P21 to determine the performance of GIB EzyBrace® Systems 2016 when the building is subjected to lateral wind or earthquake loading. Nail and screw slip tests were carried out by BRANZ and Winstone Wallboards Ltd. The Winstone Wallboard's test facilities, procedures and results have been reviewed by BRANZ and found to be satisfactory.

Other Investigations

17.1 The GIB EzyBrace® Bracing Software has been assessed by BRANZ and found to be satisfactory.

17.2 The GIB EzyBrace® Systems 2016 and GIB® Site Guide Technical Literature have been examined by BRANZ and found to be satisfactory.

17.3 Site visits were carried out by BRANZ to assess the practicability of the installation of the systems, and to view completed installations.

17.4 An assessment was made of the durability of the systems by BRANZ technical experts and found to be satisfactory.

17.5 The properties of Winstone Wallboards Ltd GIB® plasterboards have been assessed for the following properties: MOR, MOE, paper tensile strength, paper shear strength, nail pull resistance, Hunter hardness, inspection for fungal spores, hard and soft body impact tests.

Quality

18.1 Winstone Wallboards Ltd's manufacturing process and details of the quality and composition of the materials, have been examined by BRANZ and found to be satisfactory.

18.2 The quality management systems of Winstone Wallboards Ltd have been assessed and registered by TELARC as meeting the requirements of ISO 9001, Registration No. 581.

18.3 Winstone Wallboards Ltd is responsible for the quality of the product supplied.

18.4 The quality of the application and finish on site is the responsibility of the installation and stopping contractors.

18.5 Designers are responsible for the design of buildings.

18.6 Building owners are responsible for the maintenance in accordance with the instructions of Winstone Wallboards Ltd.

Sources of Information

- AS/NZS 2269.0:2012 Plywood - Structural - Specifications
- AS/NZS 2588: 1998 Gypsum plasterboard.
- BRANZ Technical Paper P21: 2010 A wall bracing test and evaluation procedure.
- NZS 3604: 2011 Timber-framed buildings.
- Ministry of Business, Innovation and Employment Record of Amendments for Compliance Documents and Handbooks.
- The Building Regulations 1992.

Readers are advised to check the validity of this Appraisal by referring to the Valid Appraisals listing on the BRANZ website, or by contacting BRANZ.

BRANZ

In the opinion of BRANZ, GIB Ezybrace® Systems 2016 is fit for purpose and will comply with the Building Code to the extent specified in this Appraisal provided it is used, designed, installed and maintained as set out in this Appraisal.

The Appraisal is issued only to Winstone Wallboards Ltd, and is valid until further notice, subject to the Conditions of Appraisal.

Conditions of Appraisal

1. This Appraisal:
   a) relates only to the product as described herein;
   b) must be read, considered and used in full together with the Technical Literature;
   c) does not address any Legislation, Regulations, Codes or Standards, not specifically named herein;
   d) is copyright of BRANZ.
2. Winstone Wallboards Ltd:
   a) continues to have the product reviewed by BRANZ;
   b) shall notify BRANZ of any changes in product specification or quality assurance measures prior to the product being marketed;
   c) abides by the BRANZ Appraisals Services Terms and Conditions.
   d) Warrants that the product and the manufacturing process for the product are maintained at or above the standards, levels and quality assessed and found satisfactory by BRANZ pursuant to BRANZ's Appraisal of the product.
3. BRANZ makes no representation or warranty as to:
   a) the nature of individual examples of, batches of, or individual installations of the product, including methods and workmanship;
   b) the presence or absence of any patent or similar rights subsisting in the product or any other product;
   c) any guarantee or warranty offered by Winstone Wallboards Ltd.
4. Any reference in this Appraisal to any other publication shall be read as a reference to the version of the publication specified in this Appraisal.
5. BRANZ provides no certification, guarantee, indemnity or warranty, to Winstone Wallboards Ltd or any third party.

For BRANZ

Chelydra Percy
Chief Executive

Date of Issue:
05 September 2016

Readers are advised to check the validity of this Appraisal by referring to the Valid Appraisals listing on the BRANZ website, or by contacting BRANZ.

GIB®

EzyBrace® Systems

Specification and installation manual



CBI 5113

AUGUST 2016



NATIONAL SUPPORT

VISIT: Winstone Wallboards Limited
37 Felix Street, Penrose,
Auckland 1061, New Zealand
POST: PO Box 12 256, Penrose 1642,
Auckland, New Zealand
PHONE: +64 9 633 0100
FAX: +64 9 633 0101
Free Fax: 0800 229 222
EMAIL: info@gib.co.nz
WEB: gib.co.nz

GIB® HELPLINE

0800 100 442

Based on learnings derived from the 2011 Canterbury earthquakes GIB EzyBrace® Systems have been updated to offer improved design flexibility and further simplification of the bracing design and build process.

NEW GIB EZYBRACE® 2016 DESIGN SOFTWARE

- Improved user interface with simplified bracing design process.
- Increased functionality including exterior line check function, easy insert/deletion of bracing elements and built in software help function.
- Includes the new GIB® Bracing element GS2- NOM
- Allows the GIBFix® Framing System to be used in GIB EzyBrace® designs.

NEW GIB® BRACING ELEMENT GS2-NOM

- Allows internal walls lined with GIB® plasterboard on both sides and fastened off as per the standard fixing requirements of the current GIB® Site Guide to contribute to bracing resistance.
- Potentially reduces the amount of fasteners[1]
- Encourages more even bracing distribution throughout the building.

[1] Actual savings dependent on building and bracing design

UPDATE TO OPENINGS IN BRACING ELEMENTS AND CEILING DIAPHRAGMS

- Large hole specification updated to use a more conservative methodology.
- Guidance included for fireplace flues and range hoods.

NEW — GIBFIX® FRAMING SYSTEM

- Reduced potential for fastener pop and joint cracking as a result of timber frame movement.
- Reduced potential for on-site call backs.
- Improved thermal performance.
- Reinforced plasterboard junctions.

BRANZ Appraised
Appraisal No.928 [2016]

CONTENTS

System Summary **5**
GIB EzyBrace® Systems — August 2016 5
GIB® Plasterboard Substitution Table 5

Introduction **6**
Scope of Use 6
Finish Quality — Framing and Substrates 6
New GIBFix® Framing Systems 6
New GS2-NOM Bracing Element 6
Compliance with the NZ Building Code 7
CAD Design Detail 7
Appraisal 7

Bracing Resistance and Demand **8**
Bracing Resistance 8
Bracing Demand 9
Software Functionality 10

Design and Construction **12**
GIB® Plasterboard Linings 12
GIB EzyBrace® Systems in Water-Splash Areas 12
Renovation 12
Openings in Bracing Elements 12
Timber Framing 13
GIBFix® Framing System (Alternative Layout) 13
Guidelines for Intersection Walls 13
Top Plate Connections 14
Parapets and Gable End Walls 14
Bottom Plate Fixing 14
Bracing Strap Installation 15
GIB HandiBrac® Installation 16
GIB HandiBrac® Placement with GIBFix® Framing System Layout 17
Ceiling Diaphragms 18
Ceiling Battens in Ceiling Diaphragms 19
Openings in Ceiling Diaphragms 20
Length of GIB EzyBrace® Elements ('N' Type) 21
Length of GIB EzyBrace® Elements ('H' Type) 22

System Specifications **23**
GIB EzyBrace® Systems Specification — GS1-N 23
GIB EzyBrace® Systems Specification — GS2-NOM 24
GS2-NOM Adhesive Fixing Option at Door Jambs 25
GIB EzyBrace® Systems Specification — GS2-N 26
GIB EzyBrace® Systems Specification — GSP-H 27
GIB EzyBrace® Systems Specification — BL1-H 28
GIB EzyBrace® Systems Specification — BLG-H 29
GIB EzyBrace® Systems Specification — BLP-H 30

Sustainability and the Environment **31**

GIB EzyBrace® Systems — August 2016

Winstone Wallboards Ltd accepts no liability if GIB EzyBrace® Systems are not designed and installed in strict accordance with instructions contained in this publication.

USE ONLY THE CURRENT SPECIFICATION

This publication may be superseded by a new publication at any time. Winstone Wallboards accepts no liability for reliance upon publications that have been superseded. Check for the current publication at gib.co.nz/library before using this publication. If you are unsure whether this is the current publication, call the GIB® Helpline on 0800 100 442.

GIB EzyBrace® 2011 software and specification literature remains valid until futher notice.

PATENTS

GIBFix® Framing System and GIB EzyBrace® Systems, including componentry and design method, have patents pending (NZ Patent Number 596691, NZ Patent 709159 pending) and design and other IP rights reserved.

Beware of substitution

The performance of GIB® Systems are very sensitive to design detailing and construction practices. All GIB® Systems have been developed specifically for New Zealand conditions and independently tested or assessed to ensure the required level of performance. It is important to use only GIB® branded components where specified and to closely follow the specified design details and construction practices, to be confident that the required level of performance and quality is achieved on site.

For further information call our GIB® Helpline on 0800 100 442.

GIB EzyBrace® Systems have been designed and tested using only the products specified. When additional GIB® plasterboard properties are required the table below provides acceptable alternative options.

	Acceptable alternative GIB® plasterboards								
Specified GIB® plasterboard	GIB® Standard	GIB Ultraline®	GIB Braceline/ Noiseline®	GIB Aqualine®	GIB Toughline®	GIB Fyreline®			
						10mm	13mm	16mm	19mm
GIB® Standard		OK	OK	OK	OK	Note 1 and 3			
GIB Braceline®	X	X		Note 2	OK	X	Notes 1, 2 and 3		

Note 1 *The fastener type and length must be as required for the relevant FRR system using the perimeter fixing pattern illustrated for the relevant bracing specification.*

Note 2 *The element must be 900mm or longer. Decrease perimeter fastener centres to 100mm. The bracing corner fastening pattern, as illustrated for the relevant specification applies to all four corners of the element. Panel hold-down fixings are required.*

Note 3 *Specify traditional wall framing layout (see figure 1) where a Fire Resistance Rating (FRR) is required.*

Scope of use

This document is a guide to wall bracing of light timber frame (LTF) buildings constructed in accordance with NZS3604:2011 Timber Framed Buildings and presents a simple and efficient method for calculating and incorporating bracing resistance. This information draws on recent experiences from seismic activity in New Zealand and seeks to minimise earthquake damage to plasterboard linings in LTF buildings.

This document outlines the main principles of bracing design and construction using GIB® plasterboard products and systems. Further detailed information can be found in the GIB® Bracing Supplement by visiting gib.co.nz/library. This 'live' on-line document is updated continuously in response to market feedback and Winstone Wallboards' development initiatives.

Finish quality — framing and substrates

Home owners are increasingly demanding a high quality of interior finish. Finish quality is heavily influenced by the substrate to which linings are fixed. Detailed information on 'Levels of Finish' is given in AS/NZS 2589 and the latest version of the GIB® Site Guide.

New GIBFix® Framing System

With increased NZ Building Code requirements and growing customer demand for thermal efficiency and high quality interior finishes, traditional framing practices present problems such as multiple framing members at wall intersections creating thermal 'bridges' and cavities where insulation cannot be installed effectively.

Figure 1 shows a traditional wall framing layout. Figure 2 shows the alternative GIBFix® Framing System layout.

Multiple timber framing members also take longer to dry resulting in an increased risk of fastener pops and blemishes resulting from timber frame movement.

The GIBFix® Framing System offers better thermal efficiencies and minimises potential joint imperfections resulting from interior linings being fixed to multiple timber framing members.

The GIBFix® Framing System can be used in conjunction with GIB EzyBrace® Systems.

Bracing resistance is not affected by the GIBFix® Framing System if the use of this alternative timber framing layout is preferred. Refer to the GIBFix® Framing System literature for more information.

Bracing ratings apply whether fixing is directly into timber or into the metal components, provided correct construction details, fastener types and centres are applied.

FIGURE 1: TRADITIONAL WALL FRAMING LAYOUT

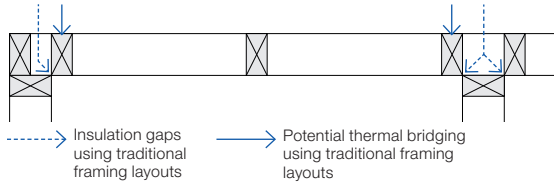

GFS004

FIGURE 2: GIBFIX® FRAMING SYSTEM (ALTERNATIVE LAYOUT)

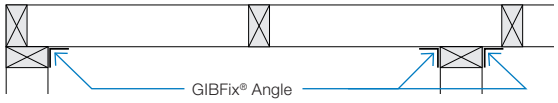

GFS005

NEW GS2-NOM Bracing Element

The new GS2-NOM bracing element allows most homes to be braced with a single lining type and less fixings so that a high quality finish is maintained throughout.

GS2-NOM permits the contribution of 'nominally fixed' internal walls. Higher performance elements are commonly specified on external walls and where limited wall area is available or adjacent to significant openings.

Winstone Wallboards recommends the use of the GIBFix® Framing System in conjunction with GS2-NOM elements. Key benefits of this approach include:

- Reduced potential for fastener pop and joint cracking of plasterboard linings.
- Enhanced thermal performance.
- Allows internal walls lined with GIB® plasterboard on both sides and fastened off as per the standard fixing requirements of the current GIB® Site Guide to contribute bracing resistance.
- Potentially reduces the amount of fasteners[1].
- Encourages more even bracing distribution throughout the building.

1. Actual savings dependent on building and bracing design.

Compliance with the NZ Building Code

NZBC CLAUSE B1 — STRUCTURE

The design and material specification for steel and timber framing used in conjunction with this literature must be in accordance with the performance requirements of NZBC Clause B1. GIB EzyBrace® Systems comply with the requirements of NZS 3604:2011, when designed and installed in accordance with this publication and relevant technical literature. NZS 3604:2011 is an acceptable solution to NZBC Clause B1.

NZBC CLAUSE B2 — DURABILITY

Under normal conditions of dry internal use GIB EzyBrace® Systems have a service life in excess of 50 years and satisfy the requirements of NZBC Clause B2. When in conditions of dry internal use, the components specified in this literature satisfy the requirements of NZBC Clause B2.

GIB® EzyBrace® Systems must not be specified in areas where 15 year durability applies and where linings are subject to direct water pressure, e.g. shower cubicle or shower over bath situations.

NZBC CLAUSE F2 — HAZARDOUS BUILDING MATERIALS

Under normal conditions of use, during handling, installation or serviceable life, the products detailed in GIB EzyBrace® Systems do not constitute a health hazard and meet the provisions of the NZBC Clause F2.

NZBC CLAUSE H1 — ENERGY EFFICIENCY

Buildings must be constructed to achieve an adequate degree of energy efficiency and the building envelope must provide adequate thermal resistance. The required thermal resistance (R-value) of timber framed external walls depends on climate zone but is commonly in the range from R 1.9 to R 2.0.

CAD design details

Where applicable drawings related to GIB EzyBrace® Systems have been produced for CAD design. These are identified by a unique number in the bottom corner of each detail box. CAD design details can be found at gib.co.nz/library.

Appraisal

GIB EzyBrace® Systems 2016 have been appraised by the Building Research Association of New Zealand (BRANZ), Appraisal No. 928 (2016) GIB EzyBrace® Systems, 2016.

It is of prime importance to comply with the details of design, construction and workmanship in this document.

Bracing resistance

WALL BRACING LAYOUT

When designing the bracing layout, carefully consider the final finished appearance and utilise full wall lengths where possible, avoiding unnecessary fastenings in the centre of a clear wall. Using the available wall length provides additional bracing and achieves improved aesthetics.

FIGURE 3: WALL BRACING LAYOUT

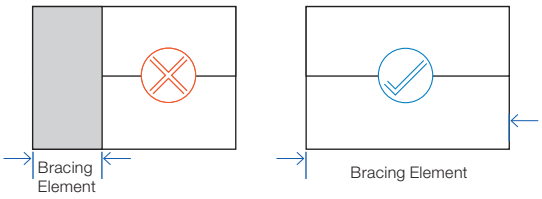

BRACING DISTRIBUTION

Distribute bracing by drawing a grid pattern of bracing lines along and across the building. Bracing lines must coincide as much as possible with the wall bracing elements. Pairs of elements may be counted on a single line provided they are no more than 2 metres apart and parallel. See figure 4.

Locate bracing evenly throughout the building and as close as practical to corners of external walls.

Space bracing lines no more than:

- 6 metres for standard construction with any GIB® plasterboard ceiling, or
- 7.5 metres where dragon ties in accordance with NZS3604:2011 have been installed, or
- 12 metres with a GIB® plasterboard ceiling diaphragm.

The construction of ceiling diaphragms is described in detail on p.18–20.

NZS3604:2011 requires that no bracing line shall have a capacity less than the greater of:

- 100 Bracing Units (BUs), or
- 15 x the external wall length (BUs) for bracing lines coinciding with external walls, or
- 50% of the total demand (D) divided by the number of lines (n) in the direction being considered (BUs).

FIGURE 4: BRACING GRID LAYOUT

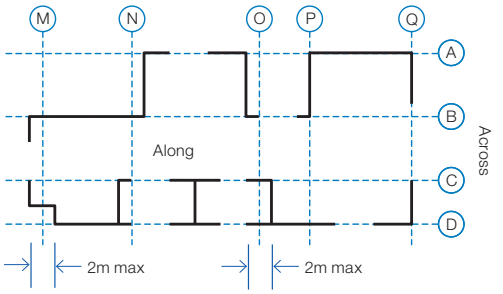

The NZS3604 ‘rules’ are merely minimum guidelines and compliance with them does not in itself ensure even distribution. The designer is responsible for checking distribution. Poor distribution can cause torsional effects and localised or more significant damage in an earthquake event.

GIB EZYBRACE® SYSTEMS

The GIB EzyBrace® Specification Numbering System (and sub-components thereof) is protected by copyright and makes specification and identification of GIB EzyBrace® Systems transparent.

- 'GS' stands for GIB® Standard.
- 'BL' for GIB Braceline®.
- 'P' for plywood.
- '1' and '2' for linings one or both sides.
- ‘N’ stands for 'no specific panel hold-down fixings'.
- 'H' stands for 'specific panel hold-down fixing' required.
- 'NOM' stands for 'nominal plasterboard fixing'. This refers to the standard fixing method used to install plasterboard as shown in the current GIB® Site Guide.

Where specific hold-down fixings are specified, refer to p.15-16. GIB HandiBrac® is fully contained within the framing cavity and does not interfere with lining installation and quality of finish.

Where no specific hold-down fixings are required, the minimum NZS3604:2011 bottom plate fixings apply.

Full bracing element construction details are provided in this technical literature.

Further general design and construction information can also be found in our GIB® Bracing Supplement by visiting gib.co.nz/library.

Specifying GIB EzyBrace® elements (minimum wall length 400mm)	
Inside lining external walls.	Nominate available lengths of wall as GS1-N elements. Use BL1-H if higher ratings are required. If the other side of the frame is lined with plywood consider GSP-H or BLP-H elements or use alternative proprietary bracing systems.
Internal walls (only one side available for bracing).	Nominate available lengths of wall as GS1-N elements. Use BL1-H if higher ratings are required.
Internal walls (both sides available for bracing).	Nominate available length of wall as GS2-NOM elements. Change to GS1-N if higher ratings are required. Change to GS2-N if higher ratings are required. Change to BLG-H for even higher ratings. Consider GSP-H or BLP-H if the opposite side is lined with plywood.

Bracing demand

GIB EZYBRACE® CALCULATOR

The GIB EzyBrace® calculator is a software tool to determine the wind and earthquake bracing demand and to design the bracing resistance for light timber-framed buildings constructed in accordance with NZS 3604:2011.

The updated GIB EzyBrace® calculator combines an up-to-date user-friendly interface with the latest knowledge relating to the performance of GIB® plasterboard in light timber-framed structures when subjected to high winds or earthquakes. The calculator can be down-loaded free of charge by visiting gib.co.nz/ezybrace and can be installed on either Microsoft® or Apple® Mac environments.

DEMAND

Wind and Earthquake 'Demand' calculates the forces a structure must be able to resist during its 'design life'. The GIB EzyBrace® calculator's Demand sheet determines the number of Bracing Units required depending on building location, building dimensions and materials used. The Demand sheet closely follows the familiar format of our Excel based GIB EzyBrace® calculator, and includes additional features such as a pop-up help facility explaining required input.

Bracing resistance sheets ('tabs') are added depending on the building specification entered. For example, subfloor bracing resistance tabs only show when a 'subfloor' foundation type has been selected.

The Demand sheet gives the designer the option to select a longer earthquake return period which represents a higher earthquake design force. The default for buildings constructed in accordance with NZS3604:2011 is an earthquake that has a 10% chance of being exceeded within the assumed 50 year 'design life' of a light timber framed residential structure, a 'return period' of 500 years.

Many commercial and public buildings are designed for the more stringent requirement of a 10% probability of exceedance in a 100 or 250 year life expectancy.

A screen shot of the GIB EzyBrace® 2016 Demand Sheet and Help Facility is shown in figure 5.

FIGURE 5: GIB EZYBRACE® 2016 — DEMAND CALCULATION SHEET AND 'POP UP' HELP FACILITY

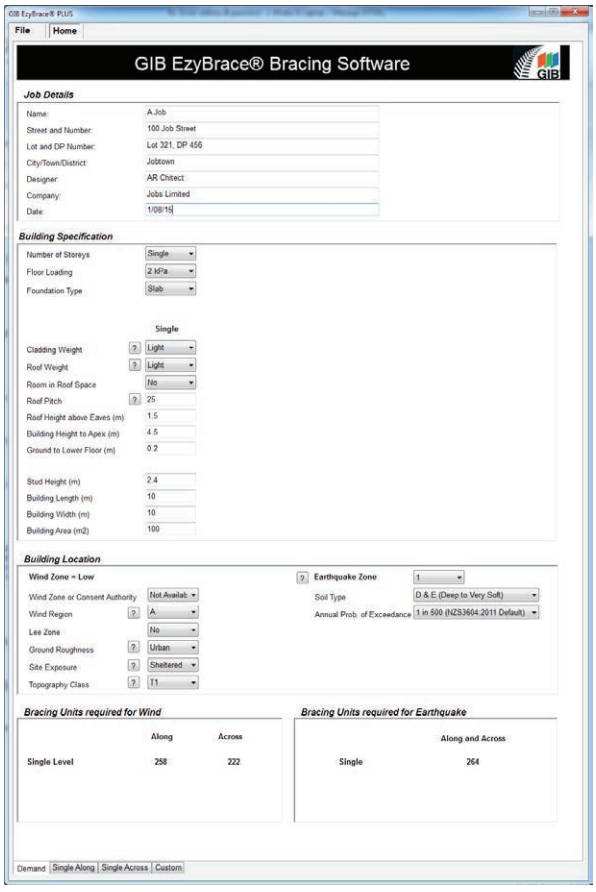

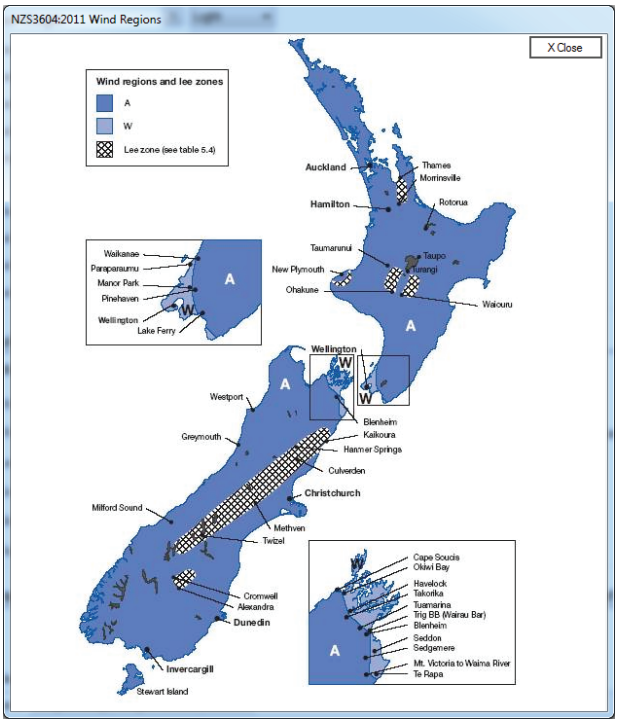

Download GIB EzyBrace® 2016 design software from gib.co.nz/ezybrace

Software functionality

Innovations adopted in the GIB EzyBrace® 2016 bracing 'resistance' calculation sheets include the ability to easily add and delete lines and elements during calculations.

The software compares bracing resistance achieved with demand and for wall bracing lines incorporating external walls, the external wall length can now be entered to check minimum bracing units required on that line. The NZS 3604:2011 rules and associated software output are not the only check. Designers must additionally check the building layout to ensure adequate bracing distribution.

Figures 6 and 7 show screen shots of the Wall and Subfloor Resistance Sheets respectively.

FIGURE 6: GIB EZYBRACE® 2016 — WALL BRACING RESISTANCE CALCULATION SHEET

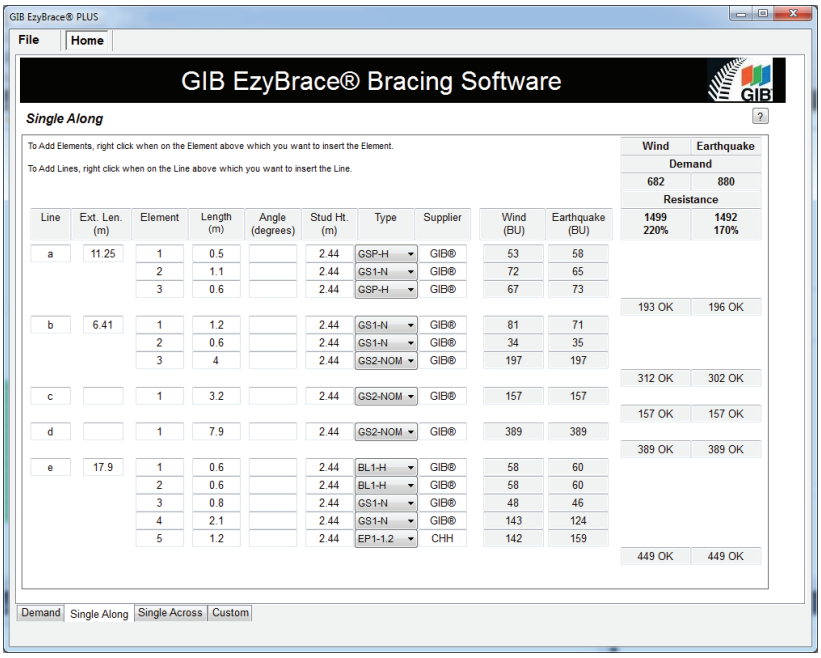

FIGURE 7: GIB EZYBRACE® 2016 — SUBFLOOR BRACING RESISTANCE CALCULATION SHEET

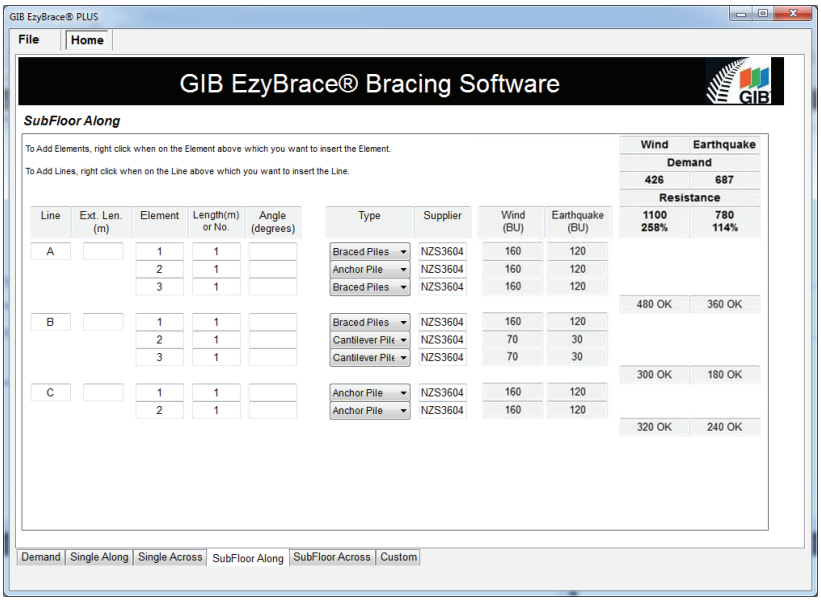

Download GIB EzyBrace® 2016 design software from gib.co.nz/ezybrace

Software functionality

Custom elements can be entered by accessing the 'custom' tab as shown in figure 8.

FIGURE 8: GIB EZYBRACE® 2016 — CUSTOM ELEMENTS SHEET

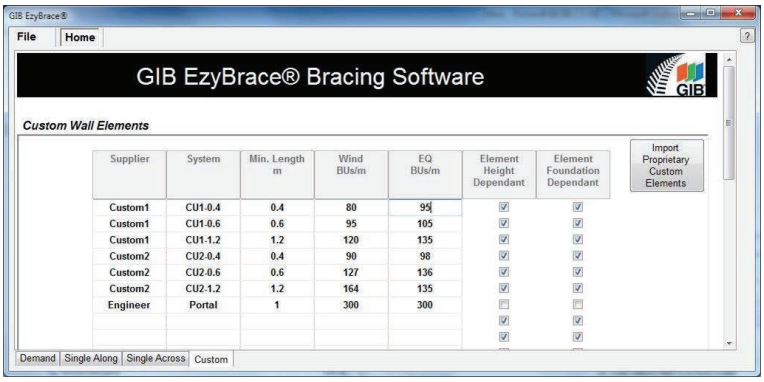

Note: Values and systems shown in Custom Elements Sheets are for illustrative purposes only.

Help can be accessed by pressing the ? symbol which displays a window with further information.

The GIB EzyBrace® 2016 software has a number of options that can be accessed via the File tab at the top left hand corner of the window. The options include: New, Save, Save As, Open, Recent and Print.

- The New option closes any opened job ready for the input of a new job.
- The Save option saves the currently opened job to the same filename and the Save As option saves the job to a new filename.
- The Open option prompts for the name of an existing job.
- The Recent option displays a list of the ten latest jobs and allows for the selection of one of these jobs to be opened.
- The Print option displays the print screen. In this screen, a print preview is displayed. The print preview can be copied to the clipboard by clicking the right-hand mouse button. Also on the print screen is the option to choose which pages are to be printed and the option to print the output to a portable data format, PDF, file.
- The Print Screen View is shown in figure 9.

FIGURE 9: GIB EZYBRACE® 2016 — PRINT SCREEN VIEW

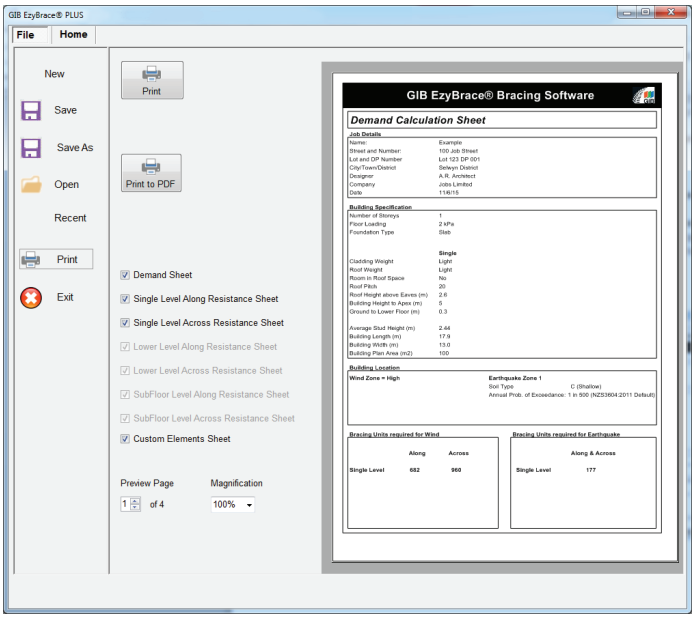

Download GIB EzyBrace® 2016 design software from gib.co.nz/ezybrace

GIB® plasterboard linings

When fixing part sheets of GIB® plasterboard, a minimum sheet width of 300mm applies for bracing elements. Horizontal fixing is recommended. If fixing vertically, full height sheets shall be used where possible. Where sheet end butt joints are unavoidable they must be formed over nogs or over the studs and fastened at 200mm centres. Alternatively, and preferably, sheet end butt joints may be back-blocked.

When a GIB® Bracing element has been designated for a section of wall, BU ratings cannot be increased by incorporating additional proprietary bracing elements within that same section of wall.

LIMITATIONS

- GIB® plasterboard must be stacked flat and protected from the weather.
- GIB® plasterboard must be handled as a finishing material.
- GIB® plasterboard in use must not be exposed to liquid water or be installed in situations where extended exposure to humidities above 90% RH can reasonably be expected.
- GIB EzyBrace® Systems must not be used in showers or behind baths.
- It is highly recommended not to install GIB® plasterboard in any situation where external claddings are not in place or the property is not adequately protected from the elements.
- If GIB® plasterboard is installed under these conditions, the risk of surface defects such as joint peaking or cracking is greatly increased.

GIB EzyBrace® Systems in water-splash areas

When GIB® plasterboard is installed in locations likely to be frequently exposed to liquid water it must have an impervious finish. Examples are adhesive fixed acrylic shower linings or ceramic tiles over an approved waterproof membrane over GIB Aqualine®. The NZBC requires 15 years durability in these situations. Bracing elements are required to have a durability of 50 years. Bracing elements are not to be located in shower cubicles or behind baths because of durability requirements, the likelihood of renovation, and practical issues associated with fixing bracing elements to perimeter framing members. Otherwise GIB EzyBrace® Systems can be used in water-splash areas as defined by NZBC Clause E3, provided these are maintained impervious for the life of the building.

For futher design details refer to the current GIB Aqualine® Wet Area Systems literature.

Renovation

When relining walls during the process of renovation, ensure that bracing elements are reinstated (check the building plans).

Openings in bracing elements

SMALL OPENINGS

Small openings (e.g. power outlets) of 90 x 90mm or less may be placed no closer than 90mm to the edge of the braced element. A block may need to be provided alongside the perimeter stud as shown below.

LARGE OPENINGS

Openings above 90 x 90mm such as switch boards, recessed cabinets and TV's etc. should be placed outside of the bracing element or locate bracing on the other side of the wall framing.

FIGURE 10: SMALL OPENINGS IN BRACING ELEMENTS

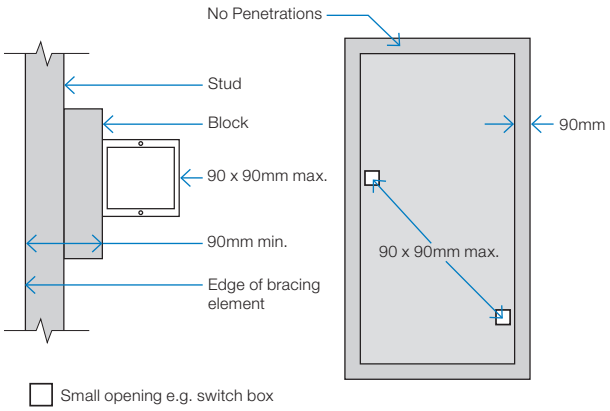

GEB001

FIGURE 11: LARGE OPENINGS AND BRACING ELEMENTS

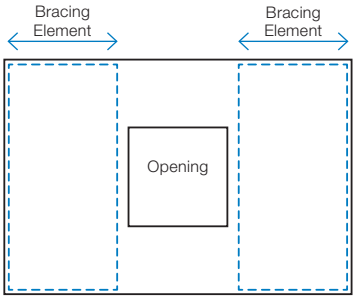

Timber framing

General framing requirements such as grade, spacings and installation shall comply with the provisions of NZS 3604:2011. To achieve the published bracing performance the minimum actual framing dimensions are 90 x 45mm for external walls and 70 x 45mm for internal walls.

As a minimum the use of Kiln Dried Stress Graded timber for all wall, roof and mid-floor framing members is recommended.

GIBFix® Framing System (alternative layout)

Practices recommended as part of the GIBFix® Framing System aim to increase timber framing efficiencies, reduce reliance on unnecessary framing at wall junctions and minimise surface imperfections that commonly arise from constructing plasterboard junctions over multiple timber members. GIBFix® Angles fixed to a single timber framing member are introduced to tie together plasterboard junctions, improving seismic resilience and decrease the risk of future defects due to timber movement. The GIBFix® Framing System can be used in conjunction with the GIB EzyBrace® System.

Note: GIBFix® Angles and 32mm x 7g GIB® Grabber® Dual Thread Screws may also be used in traditional wall framing layouts and in GIB EzyBrace® Systems.

When the GIBFix® Framing System is used a minimum of 2 equally spaced nogs for walls between 2.4m and 3m in height are required at corners and wall junctions.

When used in GIB EzyBrace® systems GIBFix® Angles must run from top to bottom on all applicable studs. If 2 GIBFix® Angles are required on a stud they must be overlapped by a minimum of 300mm with 2/32mm 7g GIB® Grabber® Dual Thread Screws penetrating through both GIBFix® Angles.

For full specification details refer to GIBFix® Framing System literature available at gib.co.nz/gibfix.

Guidelines for intersection walls

GIB® Bracing Elements may have intersecting walls with a minimum length of 200mm. Fasteners are required around the perimeter of the bracing element. Vertical joints at T-junctions shall be fixed and jointed as specified for intermediate sheet joints. The bracing element length must be no less than 900mm.

Where a Wall Bracing Element is interrupted by a T-junction the element is deemed to be continuous for the whole length (900mm minimum in the example illustrated).

When fixing part sheets of GIB® plasterboard to the side of a T-junction, a minimum width of 300mm applies for bracing elements. See figures 12 and 13.

FIGURE 12: WALL INTERSECTION (TRADITIONAL WALL FRAMING)

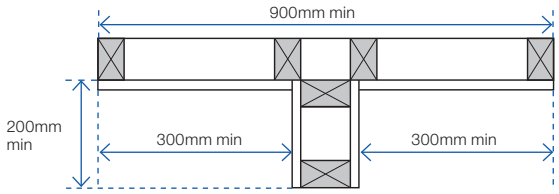

GEB002

FIGURE 13: WALL INTERSECTION (GIBFIX® FRAMING SYSTEM)

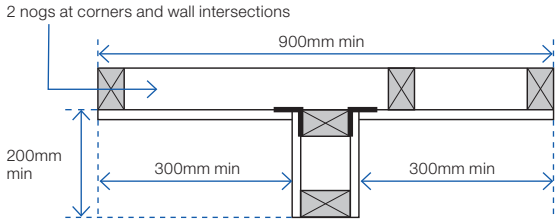

GEB003

FIGURE 14: CORNER INTERSECTION (GIBFIX® FRAMING SYSTEM)

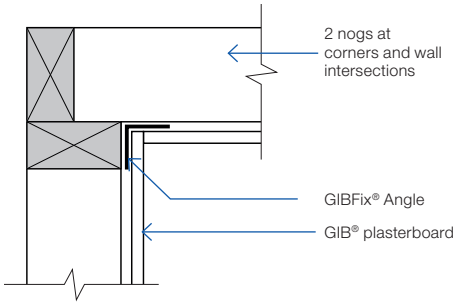

GFS001

FIGURE 15: WALL INTERSECTION FASTENER PLACEMENT

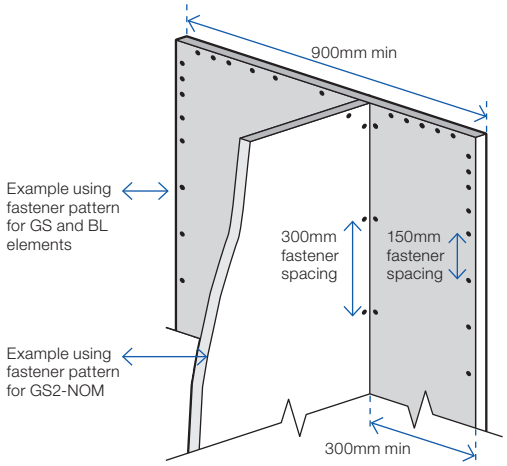

Junction

Min 32mm x 6g GIB® Grabber® High Thread or 32mm x 7g GIB® Grabber® Dual Thread Screws @ 300mm ctrs each side.

Top plate connections

For top plate connections refer to NZS3604:2011 section 8.7.3.

Parapets and gable end walls

Bracing elements must be fixed from top plate to bottom plate. Fixing to a row of nogs is not acceptable unless either:

A continuous member such as an ex 90 x 45mm ribbon plate is fixed across the studs just above a row of nogs at the ceiling line, as shown in figure 16.

or

GIBFix® Angle as shown in figure 17. The angle is fixed to a row of nogs with 30 x 2.5mm galv flat head nails or 32mm x 7g GIB® Grabber® Dual Thread Screws at 300mm centres.

Bottom plate fixing

TIMBER FLOOR

For elements with an 'N' specification use 2/100 x 3.75mm hand or 3/90 x 3.15mm power-driven nails at 600mm centres.

In addition, for elements with an 'H' specification, use GIB HandiBrac® panel hold-down fixings at each end of the bracing element, see p.16.

CONCRETE FLOOR — EXTERNAL WALL BRACING ELEMENTS

For bracing elements with an 'N' specification fix external wall plates in accordance with NZS 3604:2011.

Use GIB HandiBrac® panel hold-down fixings at each end of bracing elements with an 'H' specification and minimum intermediate fixings as required by NZS 3604:2011.

CONCRETE FLOOR — INTERNAL WALL BRACING ELEMENTS

For bracing elements with an 'N' specification fix plates in accordance with NZS 3604:2011 or use 75 x 3.8mm shot-fired fasteners with 16mm discs spaced at 150 and 300mm from end-studs and 600mm centres thereafter.

For bracing elements with an 'H' specification use GIB HandiBrac® panel hold-down fixings at each end of the element and minimum intermediate fixings as required by NZS 3604:2011.

FIGURE 16: PARAPETS AND GABLE ENDS WITH RIBBON PLATE

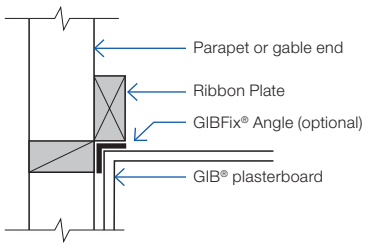

FIGURE 17: PARAPETS AND GABLE ENDS WITH GIBFIX® ANGLE

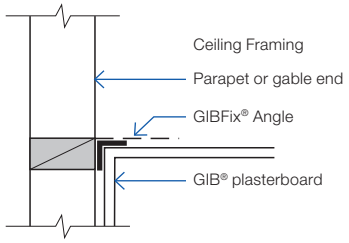

GFS003

BOTTOM PLATE FIXINGS FOR GIB® BRACING ELEMENTS

Brace type	Concrete slabs		Timber floors
	External wall	Internal wall	External and Internal walls
GS1-N	As per NZS 3604:2011. No specific additional fastening required.	As per NZS 3604:2011. Alternatively use 75 x 3.8mm shot-fired fasteners with 16mm discs, 150mm and 300mm from each end of the bracing element and at 600mm thereafter.	Pairs of 100 x 3.75mm flat head hand driven nails or 3/90 x 3.15mm power driven nails at 600mm centres in accordance with NZS 3604:2011.
GS2-N	Not applicable.		
GS2-NOM			
GSP-H BL1-H BLP-H	Intermediate fastenings to comply with NZS 3604:2011 In addition: GIB HandiBrac® fixings or metal wrap-around strap fixings and bolt as illustrated on p.15 and 16.		Pairs of 100 x 3.75mm flat head hand driven nails or 3/90 x 3.15mm power driven nails at 600mm centres in accordance with NZS 3604:2011. In addition: GIB HandiBrac® fixings or metal wrap-around strap fixings and bolt as illustrated on p.15 and 16.
BLG-H	Not applicable	As for GSP-H, BL1-H, BLP-H on concrete slab as illustrated on p.15 and 16.	

Bracing strap installation

Care needs to be taken with the installation of the bracing strap. It should be checked in to be flush with the face of the stud providing a flat substrate for the plasterboard and positioned in such a way that the corner fastenings of the bracing element are not affected by it. Keeping the strap to the edge of the end stud as shown will allow the corner fastenings to be installed without having to penetrate the bracing strap.

Concrete floor	Timber floor
400 x 25 x 0.9mm galvanised strap to pass under the plate and up the other side of the stud. Six 30 x 2.5mm flat head galvanised nails to each side of the stud. Three 30 x 2.5mm flat head galvanised nails to each side of the plate. Hold down bolt with 50 x 50 x 3mm washer to be fitted within 80mm of the end of the element.	
Internal wall	
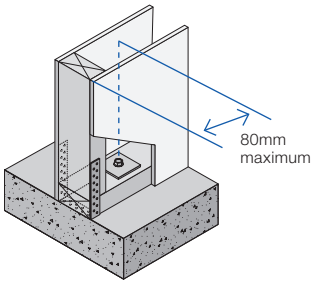 GEB004	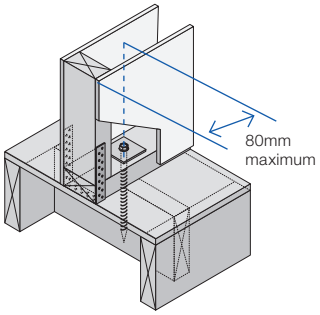 GEB005
External wall	
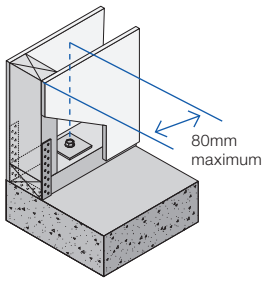 GEB006	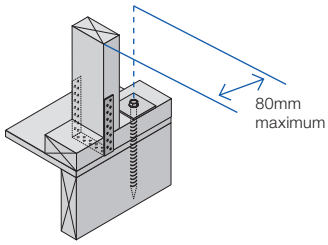 GEB007
Note: Where applicable drawings have been produced for CAD design. These are identified by a unique number in the bottom corner of each detail box that can be found at gib.co.nz/library.	2/300 x 25 x 0.9mm galvanised straps with six 30 x 2.5mm flat head galvanised nails to each stud and into the floor joist and three nails to the plate. Block to nog fixed with 3/100 x 3.75mm nails to stud.
	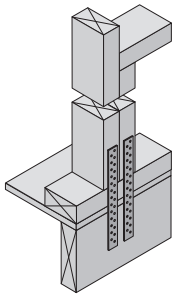 GEB008

Hold-down fastener requirements	
Concrete floor	Timber floor
A mechanical fastening with a minimum characteristic uplift capacity of 15kN fitted with a 50 x 50 x 3mm square washer within 80mm of the ends of the bracing element.	12 x 150mm galvanised coach screw fitted with a 50 x 50 x 3mm square washer within 80mm of the ends of the bracing element

GIB HandiBrac® installation

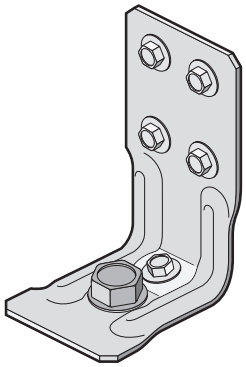

Developed in conjunction with MiTek™, the GIB HandiBrac® has been designed and tested by Winstone Wallboards for use in GIB EzyBrace® elements that require hold-downs. The GIB HandiBrac® is a substitute for bottom plate hold-down straps.

- Quick and easy to fit.
- May be fitted at any stage before lining.
- Framing face is clear to allow flush lining.
- Easily inspected.

The GIB HandiBrac® with BOWMAC® blue head screw bolt is suitable for timber and concrete floors constructed in accordance with NZS 3604:2011.

Concrete floor		**Timber floor**	
External walls	Internal walls	External walls	Internal walls
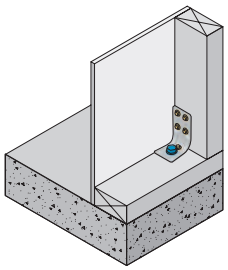 GEB009	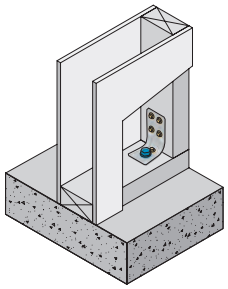 GEB010	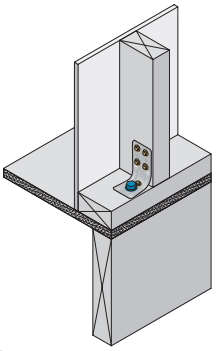 GEB011	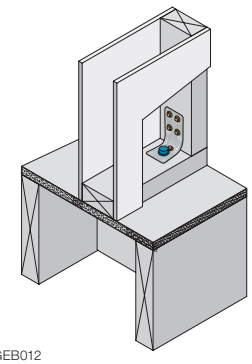 GEB012
Position GIB HandiBrac® as close as practicable to the internal edge of the bottom plate.	Position GIB HandiBrac® at the stud/plate junction and at mid-width of plate.	Position GIB HandiBrac® flush with the outside stud face, as close as practicable to the centre of the boundary joist.	Position GIB HandiBrac® in the centre of floor joist or full depth solid block.
Hold-down fastener requirements			
A mechanical fastening with a minimum characteristic uplift capacity of 15kN or use supplied BT10/140 screwbolt in GIB HandiBrac® pack.		12 x 150mm galvanised coach screw or use supplied BT10/140 screwbolt in GIB HandiBrac® pack.	

GIB HandiBrac® placement with GIBFix® Framing System for concrete floors

Figure 18 shows the preferred positioning of the GIB HandiBrac® panel hold-down brackets within the GIBFix® Framing System layout and where they are required by bracing systems with an 'H' in the specification code.

Note that, in corners and at wall junctions, a single GIB HandiBrac® can serve 'H' type bracing elements in both directions, but additional intermediate concrete anchors may need to be installed to meet the minimum requirements of NZS 3604:2011 for bottom plate fixing.

The GIB HandiBrac® is fixed to the stud which has the GIBFix® Angle.

For bracing elements with sheet material both sides of the wall connect corner studs using 8/90mm gun nails as shown in figure 19.

TIMBER FLOORS

For timber floors bolt fixing in to solid joist or block is required, as shown on p 15.

FIGURE 18: GIB HANDIBRAC® PLACEMENT WITH GIBFIX® FRAMING SYSTEM LAYOUT

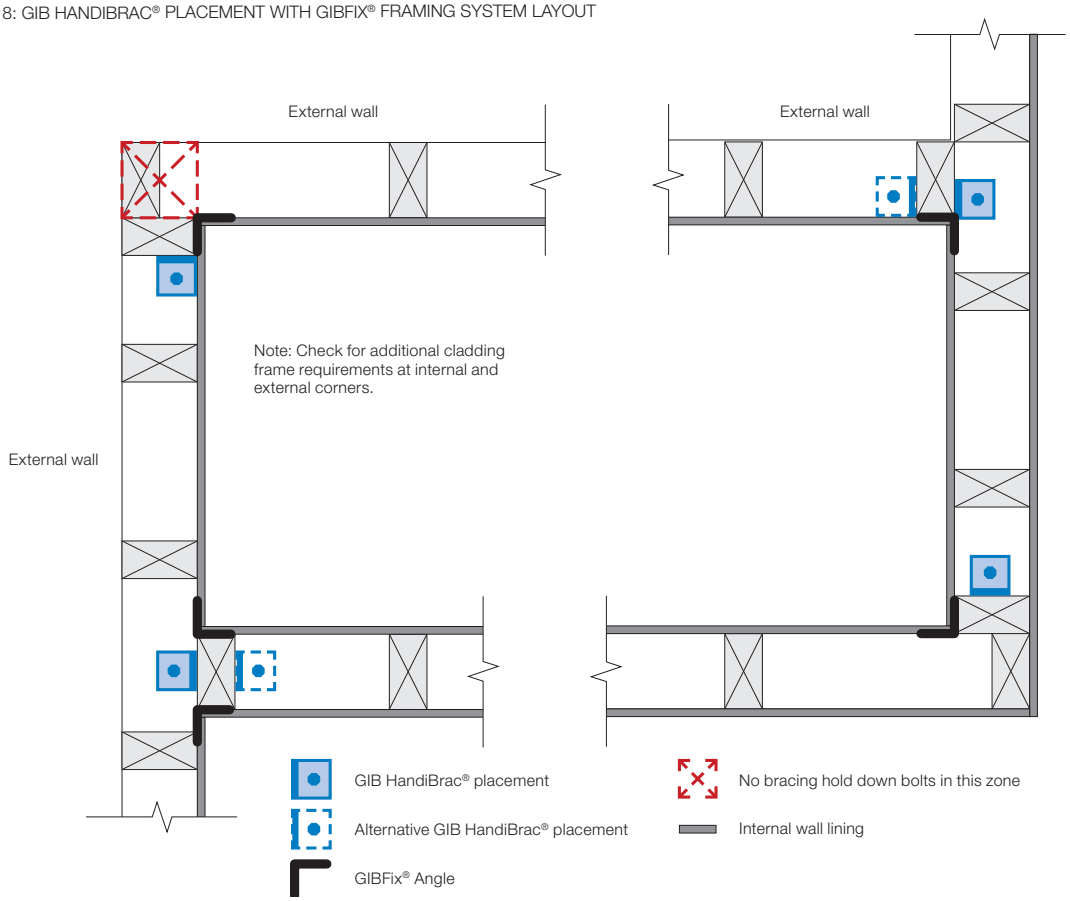

GEB013

FIGURE 19: STUD CONNECTION FOR 'H' TYPE BRACING ELEMENTS WITH SHEET MATERIAL BOTH SIDES

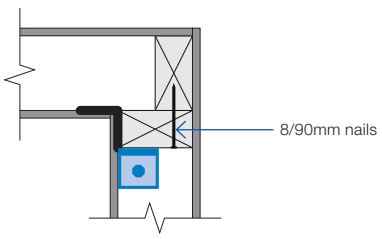

GEB014

Ceiling diaphragms

GIB® plasterboard ceiling diaphragms are stiff and strong horizontal elements which effectively transfer loads to bracing walls. They themselves do not have a bracing unit rating but are used when bracing lines exceed 6m separation. The basic shape of a ceiling diaphragm is square or rectangular. Protrusions are permitted but cut-outs are not. The length of a ceiling diaphragm shall not exceed twice its width. Dimensions are measured between supporting bracing lines. Supporting bracing lines shall have a bracing capacity no less than the greater of 100 bracing units or 15 bracing units per metre of diaphragm dimension, measured at right angles to the line being considered, see figure 21.

Limitations for GIB® plasterboard ceiling diaphragms

Ceiling diaphragms may be constructed using any GIB® plasterboard provided perimeter fixing is at;

150mm centres for: Diaphragms up to 7.5m in length, no steeper than 15°.

100mm centres for: Diaphragms up to 7.5m in length, no steeper than 45°. Diaphragms up to 12m in length, no steeper than 25°.

Diaphragms outside these parameters must be specifically designed.

General fixing requirements for GIB® Ceiling Diaphragms:

- Linings must be installed over the entire area of the diaphragm.
- Fastening must be no less than 12mm from sheet edges and not less than 18mm from sheet ends.
- Sheets must be supported by framing members (e.g., ceiling battens) spaced at no more than 500mm centres for 10mm GIB® plasterboard and at no more than 600mm centres for 13mm GIB® plasterboard.
- Sheets within the diaphragm area may be fastened and finished conventionally in accordance with the publication entitled, “GIB® Site Guide”. All joints shall be GIB® Joint Tape reinforced and stopped. It is recommended that sheet butt joints are formed off framing and back-blocked (see “GIB® Site Guide”).
- Use full width sheets where possible. At least 900mm wide sheets with a length not less than 1800mm shall be used. Sheets less than 900mm wide but no less than 600mm may be used provided all joints with adjacent sheets are back-blocked (see “GIB® Site Guide” and figure 22).
- Fasteners are placed at the specified centres around the ceiling diaphragm with the corners fastened using the GIB EzyBrace® fastener pattern.

FIGURE 20: PROTRUSIONS AND CUTOUTS

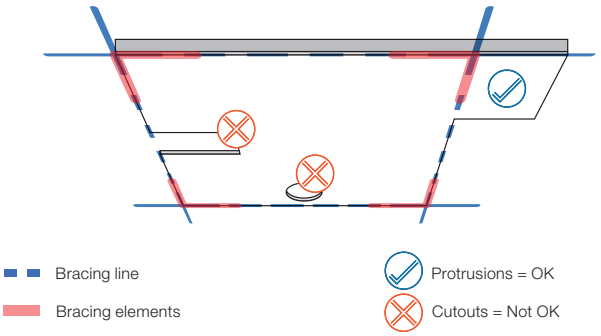

FIGURE 21: DIAPHRAGM BRACING LINING SPACINGS

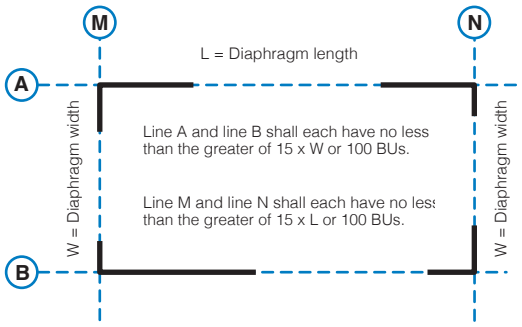

FIGURE 22: GIB® CEILING DIAPHRAGM SHEET WIDTHS AND LENGTHS

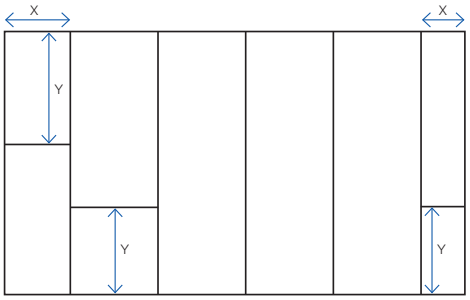

X = 900mm min or 600–900mm min provided all adjacent joints are back-blocked.

Y = 1800mm min sheet lengths at ends of ceiling diaphragms.

FIGURE 23: GIB EZYBRACE® FASTENER PATTERN

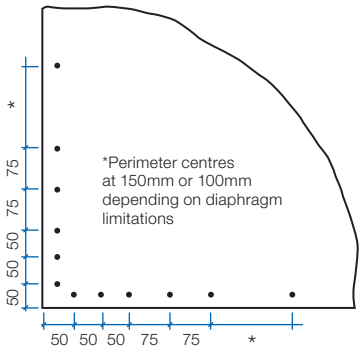

Unless stated all fastener spacings are maximums.

GEB015

Ceiling battens in ceiling diaphragms

Ceiling diaphragms may be constructed using steel or timber ceiling battens.

Battens shall be spaced at a maximum of:
— 500mm for 10mm GIB® plasterboard.
— 600mm for 13mm GIB® plasterboard.

Timber battens shall be fixed in accordance with the requirements of NZS 3604:2011.

Metal battens shall be GIB® Rondo® battens with two external flanges of 8mm to allow direct screw fixing to roof framing.

GIB® Rondo® metal battens shall be fixed with 2/32mm x 8g GIB® Grabber® Wafer Head Self Tapping screws to supporting framing.

GIB® Rondo® metal battens must be fixed directly to the roof framing. If a clip system has been used, a timber block (min 300mm) or a continuous timber member can be fixed alongside the bottom chord to permit a direct connection to the batten, see figure 26.

For GIB® Rondo® metal battens, a GIB® Rondo® metal channel or metal angle is required at the perimeter of the diaphragm. The perimeter channel shall be fastened to the top plate with 32mm x 8g GIB® Grabber® Wafer Head Self Tapping screws or 32mm x 7g GIB® Grabber® Dual Thread screw at 300mm centres maximum.

Linings are fastened to metal using 25mm x 6g GIB® Grabber® Self Tapping screws and to timber framing using 32mm x 6g GIB® Grabber® High Thread screws. Alternatively 32mm x 7g GIB® Grabber® Dual Thread screws can be used in both cases. Fastener centres are specified on p.18.

Coved ceiling diaphragms can be achieved by using nominally 32 x 32 x 0.55mm proprietary galvanised metal angles ("back-flashing") at the changes in direction. These angles shall be:
— Fastened at 300mm on each edge to metal battens using 32mm x 8g GIB® Grabber® Wafer Head Self Tapping screws or 32mm x 7g GIB® Grabber® Dual Thread screws.
— Fastened to timber framing using 32mm x 7g GIB® Grabber® Dual Thread screws when linings are installed.

FIGURE 26: GIB® RONDO® METAL CEILING BATTEN INSTALLATION

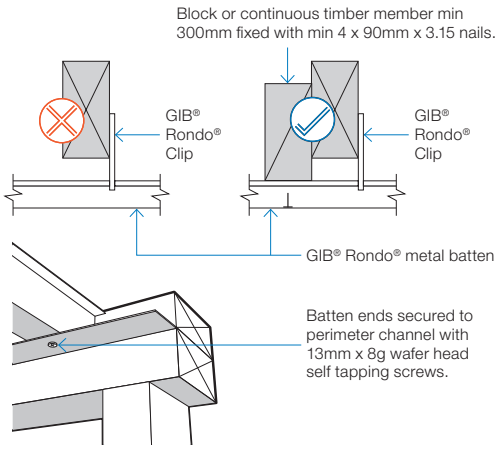

GEB016

FIGURE 27: GIB® RONDO® METAL CEILING BATTENS WITH CORNER ANGLES

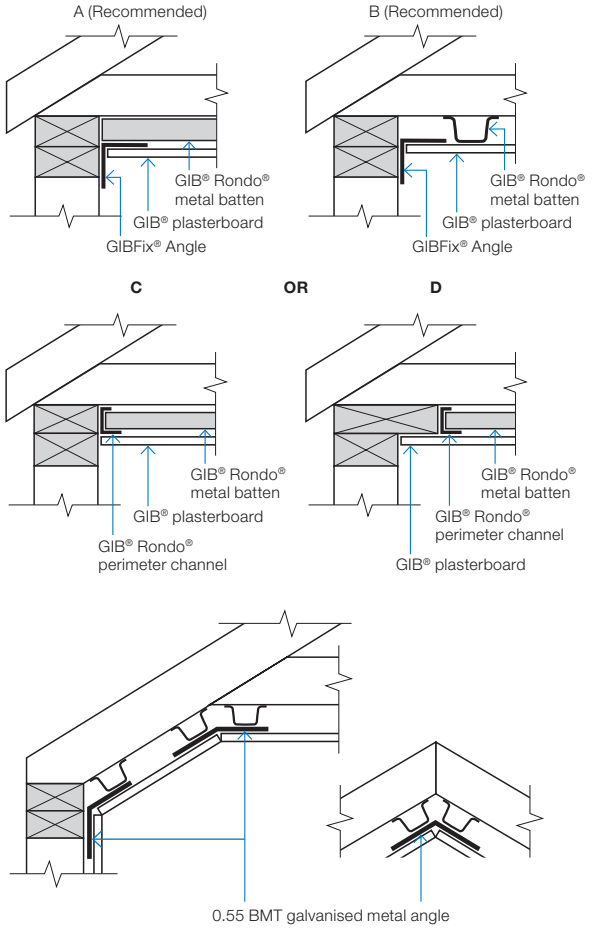

GEB017

FIGURE 28: TIMBER CEILING BATTENS*

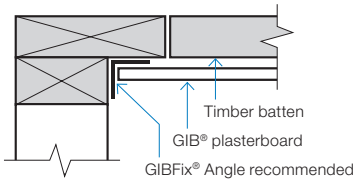

GEB018

Openings in ceiling diaphragms

SMALL OPENINGS

Small opening (e.g. down lights) of 90 x 90mm or less may be placed no closer than 90mm to the edge of the ceiling diaphragm.

LARGE OPENINGS

Openings are allowed withing the middle third of the diaphragms length and width. Fixing of sheet material to opening trimmers shall be at 150mm centres. Neither opening dimension shall exceed a third of the diaphragm width. Larger openings or openings in other locations require specific engineering design.

Where fireplace flue or range hood openings are required in a ceiling diaphragm use a galvansed metal backing plate as shown in figure 25, with a maximum hole diameter of 350mm.

Figure 25 can also be used for range hood openings in walls.

For information on openings in ceiling diaphragms contact the GIB® Helpline on 0800 100 442.

FIGURE 24: LARGE OPENINGS IN CEILING DIAPHRAGMS

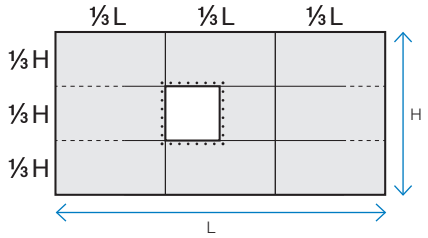

FIGURE 25: FIREPLACE FLUES AND RANGE HOOD OPENINGS

Section view

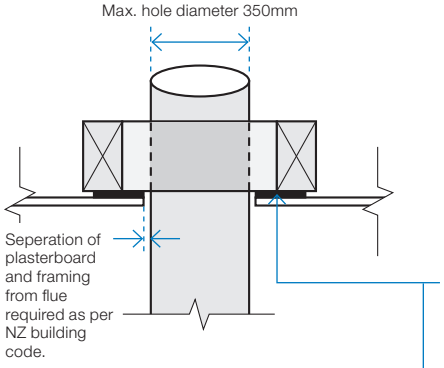

Plan view

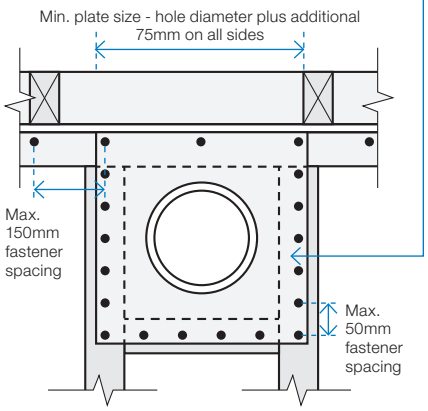

Steel plate
0.55 BMT Galvanised sheet Max. opening 350mm diameter. Installed prior to GIB® plasterboard.

Framing
90 x 45mm framing trimmed to provide extra fixing.

GIB® plasterboard ceiling
Installed over the steel plate and into framing using a minimum of 32mm x 6g GIB® Grabber High Thread or 32mm x 7g GIB® Grabber Dual Thread screws at 50mm max centre spacing.

Plasterboard ceiling not shown in plan view

Length of GIB EzyBrace® elements ('N' Type)

The length of GIB EzyBrace® elements with an 'N' extension (requiring standard NZS3604:2011 plate connections) can be taken as the full frame length measured from the outside of the end-stud to the opening face as illustrated in figures 29-32.

'N' type GIB EzyBrace® elements are identified by GIB® specification numbers GS1-N, GS2-N and GS2-NOM

The dimension 'L' shall not be less than 400mm.

Perimeter bracing fixing for linings of both 'H' and 'N' type elements is along the top and bottom plates, end stud, and doubling stud immediately adjacent to the opening.

Fastener spacings and diagram scales shown in Figures 29–32 are indicative only. Refer to p.23–30 for construction details.

FIGURE 29: GS BRACING ELEMENTS (OPTION A)

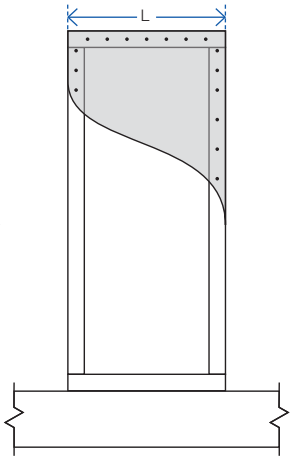

GS1-N, GS2-N elements
'L' indicates the length of the bracing element

FIGURE 30: GS BRACING ELEMENTS (OPTION B)

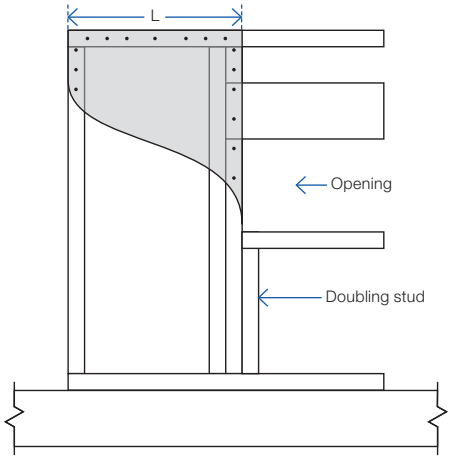

GS1-N, GS2-N elements
'L' indicates the length of the bracing element

FIGURE 31: GS BRACING ELEMENTS (OPTION C)

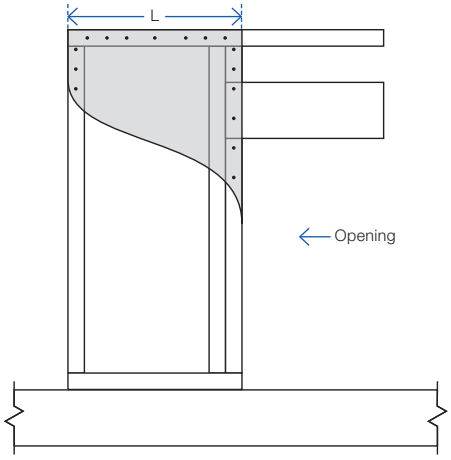

GS1-N, GS2-N elements
'L' indicates the length of the bracing element

FIGURE 32: GS BRACING ELEMENTS (OPTION D)

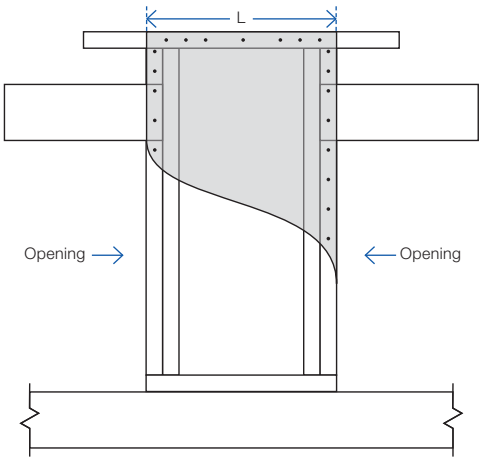

GS1-N, GS2-N elements
'L' indicates the length of the bracing element

Length of GIB EzyBrace® elements ('H' Type)

GIB EzyBrace® elements with an 'H' extension (requiring special panel hold-down fixings) can be used when the dimension 'L' as illustrated in figures 33–36 is 400mm or more.

'H' type GIB EzyBrace® elements are identified by GIB® specification numbers GSP-H, BL1-H, BLG-H and BLP-H.

The length of an 'H' type element is not only determined by the sheet material, but also by the placement of the hold-down fixings.

Hold-down fixings cannot be placed closer together than what is shown for the standard panel in figure 33.

Hold-down fixings can be placed under windows provided sill trimming studs beneath the opening are connected to the bracing element using 8/90mm gun nails, as illustrated in figure 34.

Spike doubling stud to trimming stud using a minimum of 2/90mm gun nails at 600mm centres. Lintel straps (where required for wind uplift) should be checked in and be located away from the bracing element fasteners.

Perimeter bracing fixing for linings of both 'H' and 'N' type elements is along the top and bottom plates, end stud, and doubling stud immediately adjacent to the opening as indicated in figures 34-36.

When using bracing straps, installed in accordance with p.17, fix the strap to the same framing member as shown for the GIB Handibrac® below, and install the adjacent anchor bolt in the same position as the GIB HandiBrac® bolt.

Fastener spacings and diagram scales shown in figures 33–36 are indicative only. Refer to p.23–30 for construction details.

FIGURE 33: BL BRACING ELEMENTS (OPTION A)

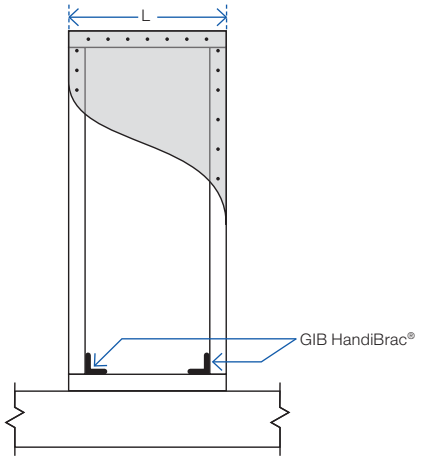

'H' type elements with specific hold downs
'L' indicates the length of the bracing element

FIGURE 34: BL BRACING ELEMENTS (OPTION B)

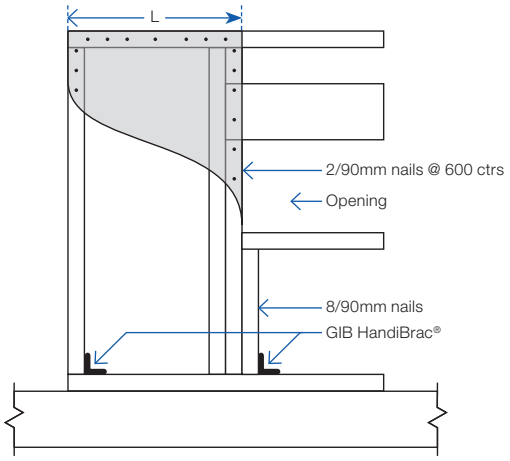

'H' type elements with specific hold downs
'L' indicates the length of the bracing element

FIGURE 35: BL BRACING ELEMENTS (OPTION C)

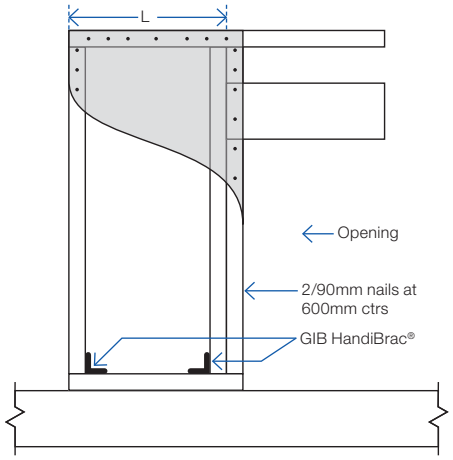

'H' type elements with specific hold downs
'L' indicates the length of the bracing element

FIGURE 36: BL BRACING ELEMENTS (OPTION D)

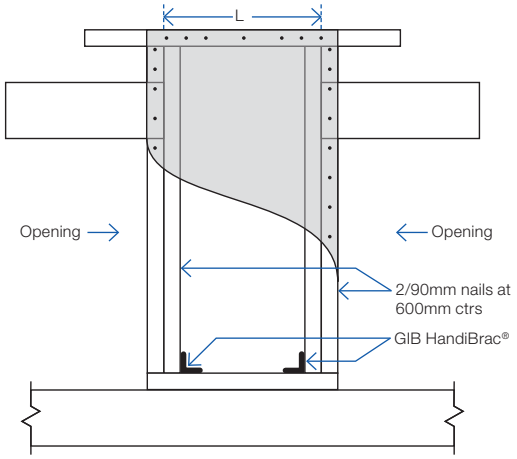

'H' type elements with specific hold downs
'L' indicates the length of the bracing element

GIB EzyBrace® Systems specification GS1-N

Specification code	Minimum length (m)	Lining requirement
GS1-N	0.4	Any 10mm or 13mm GIB® Standard plasterboard to one side only

WALL FRAMING

Wall framing to comply with;

- NZBC B1 — Structure B1/AS1 Clause 3 Timber (NZS 3604:2011).
- NZBC B2 — Durability B2/AS1 Clause 3.2 Timber (NZS 3602).

Framing dimensions and height as determined by NZS 3604:2011 stud and top plate tables for load bearing and non-bearing walls. The use of kiln dried stress graded timber is recommended.

BOTTOM PLATE FIXING

Timber floor

Pairs of hand driven 100 x 3.75mm nails at 600mm centres; or three power driven 90 x 3.15mm nails at 600mm centres.

Concrete floor

Internal Wall Bracing Lines: In accordance with the requirements of NZS 3604:2011 for internal wall plate fixing or 75 x 3.8mm shot fired fasteners with 16mm discs spaced at 150mm and 300mm from end studs and 600mm centres thereafter.

External Wall Bracing Lines: In accordance with the requirements of NZS 3604:2011 for external wall bottom plate fixing.

WALL LINING

- Any 10mm or 13mm GIB® plasterboard lining.
- Sheets can be fixed vertically or horizontally.
- Sheet joints shall be touch fitted.
- Use full length sheets where possible.

PERMITTED ALTERNATIVES

For permitted GIB® plasterboard alternatives refer to p. 5 in GIB EzyBrace® Systems literature.

FASTENING THE LINING

Fasteners

32mm x 6g GIB® Grabber® High Thread Screws, 32mm x 7g GIB® Grabber® Dual Thread Screws or 30mm GIB® Nails. If using the GIBFix® Angle use only 32mm x 7g GIB® Grabber® Dual Thread Screws.

Fastener centres

50,100,150, 225, 300mm maximum from each corner and 150mm thereafter around the perimeter of the bracing element. For vertically fixed sheets place fasteners at 300mm maximum centres to intermediate sheet joints. For horizontally fixed sheets place single fasteners to the sheet edge where it crosses the stud. Use daubs of GIBFix® adhesive at 300mm maximum centres to intermediate studs. Place fasteners no closer than 12mm from paper bound sheet edges and 18mm from any sheet end or cut edge.

JOINTING

Joint strength is important in delivering bracing system performance. All fastener heads stopped and all sheet joints GIB® Joint Tape reinforced and stopped in accordance with the GIB® Site Guide.

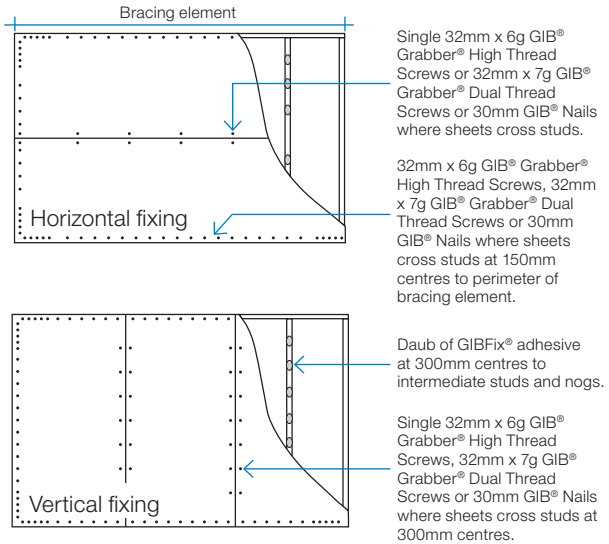

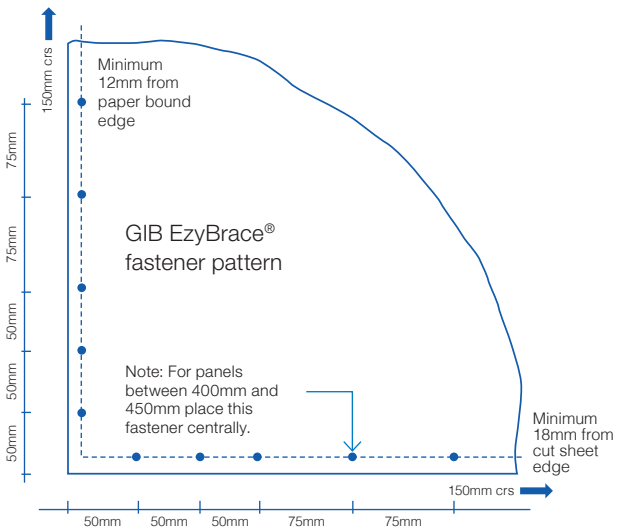

Unless stated all fastener spacings are maximums.

In order for GIB® systems to perform as tested, all components must be installed exactly as prescribed. Substituting components produces an entirely different system and may seriously compromise performance. Follow the specifications. This specification sheet is issued in conjunction with the publication GIB EzyBrace® Systems

GIB EzyBrace® Systems specification GS2-NOM

Specification code	Minimum length (m)	Lining requirement
GS2-NOM	0.4	Any 10mm or 13mm GIB® Standard plasterboard fixed to each side of the wall framing

WALL FRAMING

Wall framing to comply with;

- NZBC B1 — Structure B1/AS1 Clause 3 Timber (NZS 3604:2011).
- NZBC B2 — Durability B2/AS1 Clause 3.2 Timber (NZS 3602).

Framing dimensions and height as determined by NZS 3604:2011 stud and top plate tables for load bearing and non-bearing walls. The use of kiln dried stress graded timber is recommended.

BOTTOM PLATE FIXING

Timber floor

Pairs of hand driven 100mm x 3.75mm nails at 600mm centres; or three power driven 90mm x 3.15mm nails at 600mm centres.

Concrete floor

Internal Wall Bracing Lines: In accordance with the requirements of NZS 3604:2011 for internal wall plate fixing or 75mm x 3.8mm shot fired fasteners with 16mm discs spaced at 150mm and 300mm from end studs and then 600mm centres thereafter.

WALL LINING

- A layer of 10mm or 13mm GIB® plasterboard to each side of the wall.
- Sheets can be fixed vertically or horizontally.
- Sheet joints shall be touch fitted.
- Use full length sheets where possible.

PERMITTED ALTERNATIVES

For permitted GIB® plasterboard alternatives refer to p. 5 in GIB EzyBrace® Systems literature.

FASTENING THE LINING

Fasteners

32mm x 6g GIB® Grabber® High Thread Screws or 32mm x 7g GIB® Grabber® Dual Thread Screws. If using the GIBFix® Angle use 32mm x 7g GIB® Grabber® Dual Thread Screws.

Fastener centres

50, 300mm from each corner and 300mm maximum thereafter around the perimeter of the bracing element. For horizontally fixed sheets place single fasteners to the sheet edge where it crosses the stud. Use daubs of GIBFix® adhesive at 300mm maximum centres to intermediate studs. Place fasteners no closer than 12mm from paper bound sheet edges and 18mm from any sheet end or cut edge.

JOINTING

Joint strength is important in delivering bracing system performance. All fastener heads stopped and all sheet joints GIB® Joint Tape reinforced and stopped in accordance with the GIB® Site Guide.

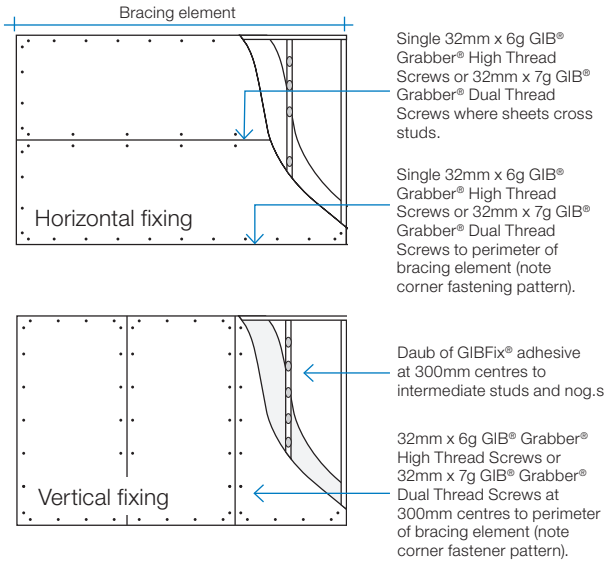

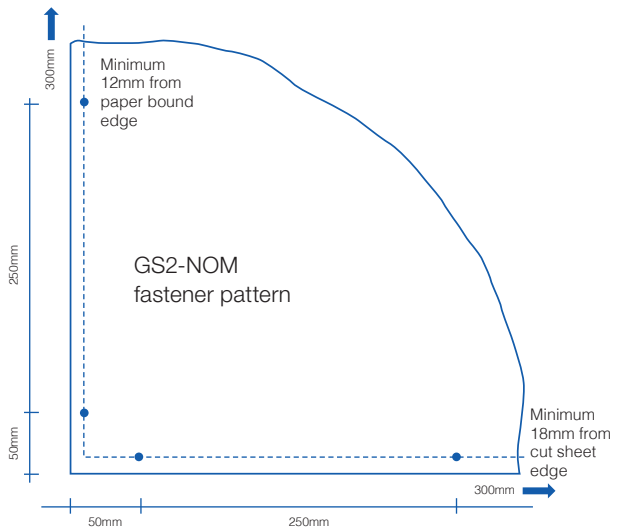

Unless stated all fastener spacings are maximums.

In order for GIB® systems to perform as tested, all components must be installed exactly as prescribed. Substituting components produces an entirely different system and may seriously compromise performance. Follow the specifications. This specification sheet is issued in conjunction with the publication GIB EzyBrace® Systems

GS2-NOM ADHESIVE FIXING OPTION AT DOOR JAMBS

As an alternative to using screw fixings, a continuous 6-10mm bead of solvent based GIBFix® All-Bond can be applied along the full height studs immediately adjacent to an internal door opening and at the door lintel or head trimmer. The lining is then bedded into the adhesive and installed into the rebated jamb, as shown in figure 38.

This solvent based adhesive option may only be used with GS2-NOM specification and is designed to reduce popping of fasteners around door openings on internal walls.

FIGURE 37: SCREW FIX FOR OPENINGS

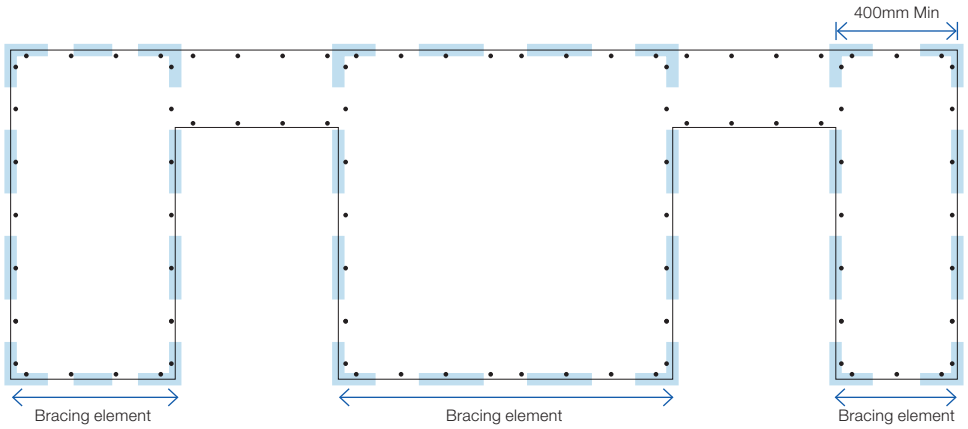

FIGURE 38: SCREW AND ADHESIVE FIX FOR OPENINGS

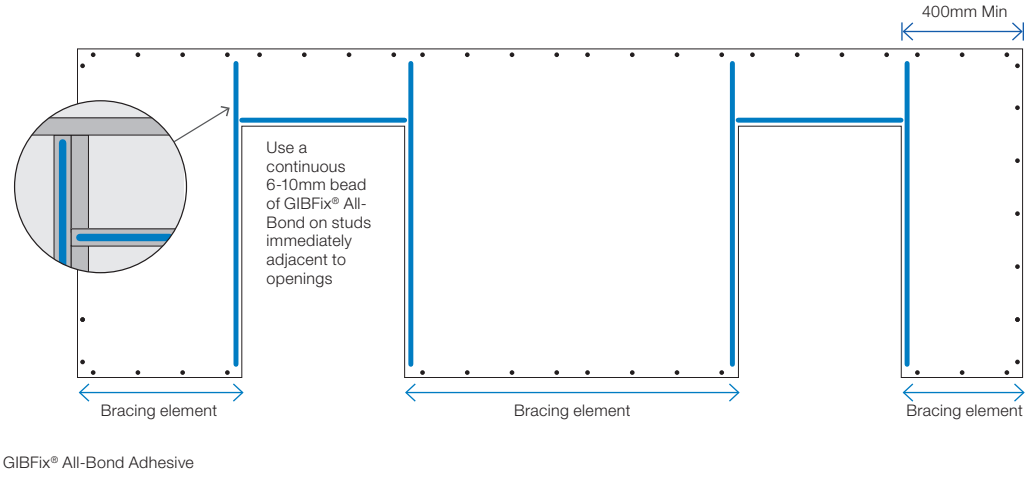

ADHESIVE NOZZLE APERTURE

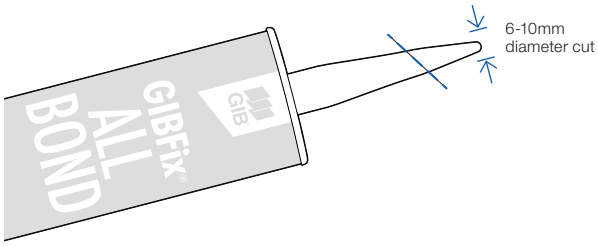

GIB EzyBrace® Systems specification GS2-N

Specification code	Minimum length (m)	Lining requirement
GS2-N	0.4	Any 10mm or 13mm GIB® Standard plasterboard fixed to each side of the wall framing

WALL FRAMING

Wall framing to comply with;

- NZBC B1 — Structure B1/AS1 Clause 3 Timber (NZS 3604:2011).
- NZBC B2 — Durability B2/AS1 Clause 3.2 Timber (NZS 3602).

Framing dimensions and height as determined by NZS 3604:2011 stud and top plate tables for load bearing and non-bearing walls. The use of kiln dried stress graded timber is recommended.

BOTTOM PLATE FIXING

Timber Floor

Pairs of hand driven 100 x 3.75mm nails at 600mm centres; or three power driven 90 x 3.15mm nails at 600mm centres.

Concrete floor

Internal Wall Bracing Lines: In accordance with the requirements of NZS 3604:2011 for internal wall plate fixing or 75 x 3.8mm shot fired fasteners with 16mm discs spaced at 150mm and 300mm from end studs and then 600mm centres thereafter.

WALL LINING

- A layer of 10mm or 13mm GIB® plasterboard to each side of the wall.
- Sheets can be fixed vertically or horizontally.
- Sheet joints shall be touch fitted.
- Use full length sheets where possible.

PERMITTED ALTERNATIVES

For permitted GIB® plasterboard alternatives refer to p. 5 in GIB EzyBrace® Systems literature.

FASTENING THE LINING

Fasteners

32mm x 6g GIB® Grabber® High Thread Screws,32mm x 7g GIB® Grabber® Dual Thread Screws or 30mm GIB® Nails. If using the GIBFix® Angle use only 32mm x 7g GIB® Grabber® Dual Thread Screws.

Fastener centres

50,100,150, 225, 300mm maximum from each corner and 150mm thereafter around the perimeter of the bracing element. For vertically fixed sheets place fasteners at 300mm maximum centres to intermediate sheet joints. For horizontally fixed sheets place single fasteners to the sheet edge where it crosses the stud. Use daubs of GIBFix® adhesive at 300mm maximum centres to intermediate studs. Place fasteners no closer than 12mm from paper bound sheet edges and 18mm from any sheet end or cut edge.

JOINTING

Joint strength is important in delivering bracing system performance. All fastener heads stopped and all sheet joints GIB® Joint Tape reinforced and stopped in accordance with the GIB® Site Guide.

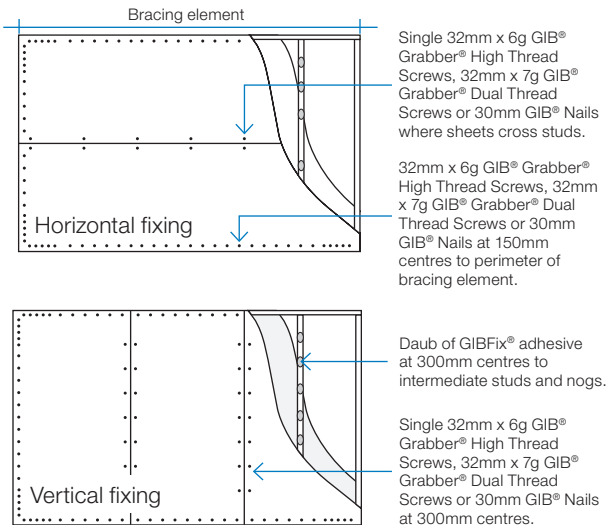

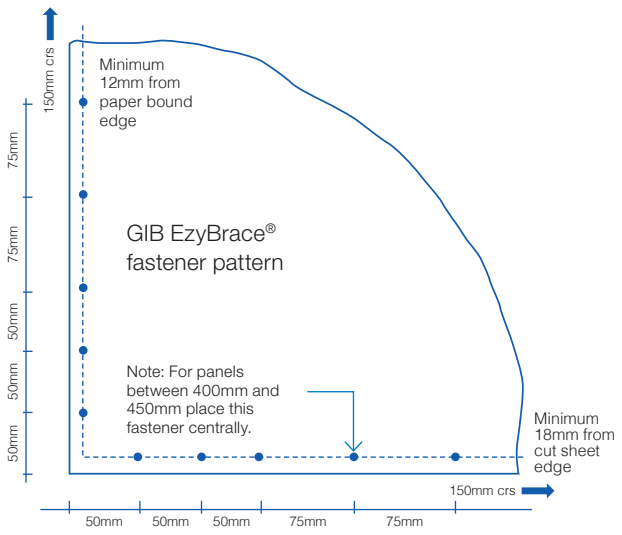

Unless stated all fastener spacings are maximums.

In order for GIB® systems to perform as tested, all components must be installed exactly as prescribed. Substituting components produces an entirely different system and may seriously compromise performance. Follow the specifications. This specification sheet is issued in conjunction with the publication GIB EzyBrace® Systems

GIB EzyBrace® Systems specification GSP-H

Specification Code	Minimum length (m)	Lining requirement	Other requirements
GSP-H	0.4	Any 10mm or 13mm GIB® plasterboard lining to one side of framing and minimum 7mm structural plywood manufactured to AS/NZ 2269.0 :2012 to the other side	Hold downs

WALL FRAMING

Wall framing to comply with;

- NZBC B1 — Structure B1/AS1 Clause 3 Timber (NZS 3604:2011).
- NZBC B2 — Durability B2/AS1 Clause 3.2 Timber (NZS 3602).

Framing dimensions and height as determined by NZS 3604:2011 stud and top plate tables for load bearing and non-bearing walls. The use of kiln dried stress graded timber is recommended.

BOTTOM PLATE FIXING

Timber floor

Use panel hold downs at each end of the bracing element. The GIB HandiBrac® is recommended. See details in GIB EzyBrace® Systems or GIB® Site Guide.

Pairs of hand driven 100 x 3.75mm nails at 600mm centres; or Three power driven 90 x 3.15mm nails at 600mm centres.

Concrete floor

Use panel hold downs at each end of the bracing element. The GIB HandiBrac® is recommended. See details in GIB EzyBrace® Systems or GIB® Site Guide. Within the length of the bracing element bottom plates are to be fixed in accordance with the requirements of NZS 3604:2011.

WALL LINING

- A layer of 10mm or 13mm GIB® plasterboard to one side of the wall plus minimum 7mm structural plywood manufactured to AS/NZ 2269.0 :2012 to the other side.
- Sheets can be fixed vertically or horizontally, with edges supported.
- Sheet joints shall be touch fitted.
- Use full length sheets where possible.

PERMITTED ALTERNATIVES

For permitted GIB® plasterboard alternatives refer to p. 5 in GIB EzyBrace® Systems literature.

FASTENING THE LINING

Fasteners

32mm x 6g GIB® Grabber® High Thread Screws, 32mm x 7g GIB® Grabber® Dual Thread Screws or 30mm GIB® Nails.

If using the GIBFix® Framing System or if fastening through GIBFix® Angles use only 32mm x 7g GIB® Grabber® Dual Thread Screws. Plywood: 50 x 2.8mm Galv or Stainless steel annular grooved FH nails.

Fastener centres

GIB® plasterboard side: 50,100,150, 225, 300mm maximum from each corner and 150mm thereafter around the perimeter of the bracing element. For vertically fixed sheets place fasteners at 300mm maximum centres to the intermediate sheet joints. For horizontally fixed sheets place single fasteners to the sheet edge where it crosses the stud. Use daubs of GIBFix® adhesive at 300mm maximum centres to intermediate studs. Place fasteners no closer than 12mm from paper bound sheet edges and 18mm from any sheet end or cut edge. Plywood side: 150mm centres to the perimeter of each sheet. GIB® corner fastener pattern does not apply to the plywood side. 300mm centres to intermediate studs.

JOINTING

Joint strength is important in delivering bracing system performance. All fastener heads stopped and all sheet joints GIB® Joint Tape reinforced and stopped in accordance with the GIB® Site Guide.

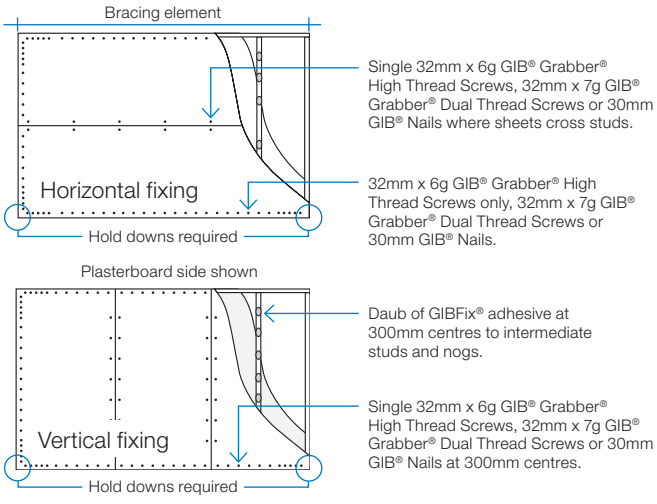

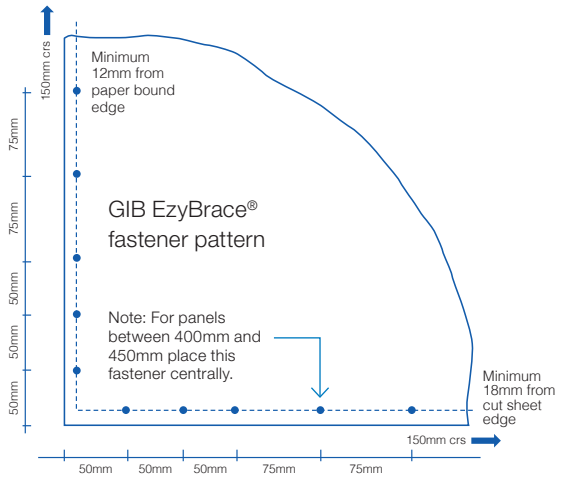

Unless stated all fastener spacings are maximums.

In order for GIB® systems to perform as tested, all components must be installed exactly as prescribed. Substituting components produces an entirely different system and may seriously compromise performance. Follow the specifications. This specification sheet is issued in conjunction with the publication GIB EzyBrace® Systems

GIB EzyBrace® Systems specification BL1-H

Specification code	Minimum length (m)	Lining requirement	Other requirements
BL1-H	0.4	10mm or 13mm GIB Braceline® to one side only	Hold downs

WALL FRAMING

Wall framing to comply with;

- NZBC B1 — Structure B1/AS1 Clause 3 Timber (NZS 3604:2011).
- NZBC B2 — Durability B2/AS1 Clause 3.2 Timber (NZS 3602).

Framing dimensions and height as determined by NZS 3604:2011 stud and top plate tables for load bearing and non-bearing walls. The use of kiln dried stress graded timber is recommended.

BOTTOM PLATE FIXING

Timber floor

Use panel hold downs at each end of the bracing element. The GIB HandiBrac® is recommended. See details in GIB EzyBrace® Systems or GIB® Site Guide.

Pairs of hand driven 100 x 3.75mm nails at 600mm centres; or Three power driven 90 x 3.15mm nails at 600mm centres.

Concrete floor

Use panel hold downs at each end of the bracing element. The GIB HandiBrac® is recommended. See details in GIB EzyBrace® Systems or GIB® Site Guide. Within the length of the bracing element bottom plates are to be fixed in accordance with the requirements of NZS 3604:2011.

WALL LINING

- A layer of 10mm or 13mm GIB Braceline®
- Sheets can be fixed vertically or horizontally.
- Sheet joints shall be touch fitted.
- Use full length sheets where possible.

PERMITTED ALTERNATIVES

For permitted GIB® plasterboard alternatives refer to p. 5 in GIB EzyBrace® Systems literature.

FASTENING THE LINING

Fasteners

32mm x 6g GIB® Grabber® High Thread Screws or 32mm x 7g GIB® Grabber® Dual Thread Screws. If using the GIBFix® Framing System or if fastening through GIBFix® Angles use only 32mm x 7g GIB® Grabber® Dual Thread Screws.

Fastener centres

50,100,150, 225, 300mm from maximum each corner and 150mm thereafter around the perimeter of the bracing element. For vertically fixed sheets place fasteners at 300mm maximum centres to the sheet joint. For horizontally fixed sheets place single fasteners to the sheet edge where it crosses the stud. Use daubs of GIBFix® adhesive at 300mm maximum centres to intermediate studs. Place fasteners no closer than 12mm from paper bound sheet edges and 18mm from any sheet end or cut edge.

JOINTING

Joint strength is important in delivering bracing system performance. All fastener heads stopped and all sheet joints GIB® Joint Tape reinforced and stopped in accordance with the GIB® Site Guide.

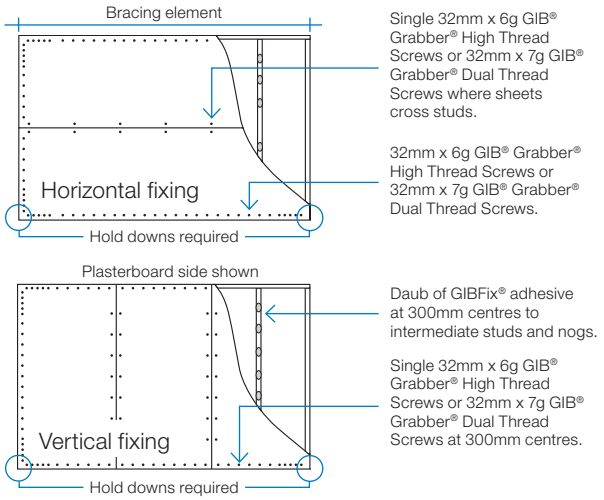

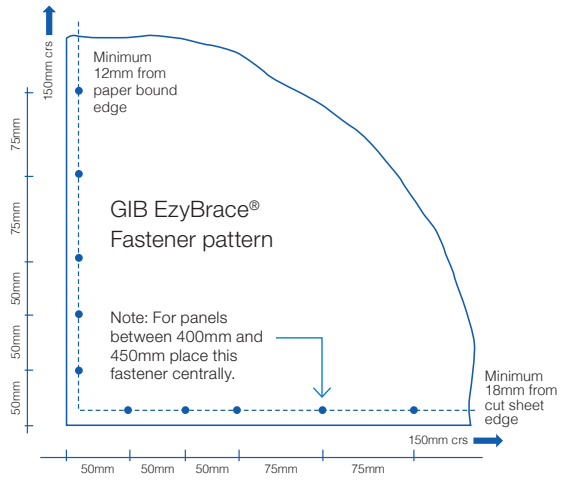

Unless stated all fastener spacings are maximums.

In order for GIB® systems to perform as tested, all components must be installed exactly as prescribed. Substituting components produces an entirely different system and may seriously compromise performance. Follow the specifications. This specification sheet is issued in conjunction with the publication GIB EzyBrace® Systems

GIB EzyBrace® Systems specification BLG-H

Specification code	Minimum length (m)	Lining requirement	Other requirements
BLG-H	0.4	10mm or 13mm GIB Braceline® to one side of the frame plus any 10mm or 13mm GIB® plasterboard to the other side	Hold downs

WALL FRAMING

Wall framing to comply with;

- NZBC B1 — Structure B1/AS1 Clause 3 Timber (NZS 3604:2011).
- NZBC B2 — Durability B2/AS1 Clause 3.2 Timber (NZS 3602).

Framing dimensions and height as determined by NZS 3604:2011 stud and top plate tables for load bearing and non-bearing walls. The use of kiln dried stress graded timber is recommended.

BOTTOM PLATE FIXING

Timber floor

Use panel hold downs at each end of the bracing element. The GIB HandiBrac® is recommended. See details in GIB EzyBrace® Systems or GIB® Site Guide. Pairs of hand driven 100 x 3.75mm nails at 600mm centres; or Three power driven 90 x 3.15mm nails at 600mm centres.

Concrete floor

Use panel hold downs at each end of the bracing element. The GIB HandiBrac® is recommended. See details in GIB EzyBrace® Systems 2011 or GIB® Site Guide. Within the length of the bracing element bottom plates are to be fixed in accordance with the requirements of NZS 3604:2011.

WALL LINING

- A layer of 10mm or 13mm GIB Braceline® to one side of the wall plus any 10mm or 13mm GIB® plasterboard lining to the other side.
- Sheets can be fixed vertically or horizontally.
- Sheet joints shall be touch fitted.
- Use full length sheets where possible.

PERMITTED ALTERNATIVES

For permitted GIB® plasterboard alternatives refer to p. 5 in GIB EzyBrace® Systems literature.

FASTENING THE LINING

Fasteners

GIB Braceline® side: 32mm x 6g GIB® Grabber® High Thread Screws or 32mm x 7g GIB® Grabber® Dual Thread Screws.Other side: 32mm x 6g GIB® Grabber® High Thread Screws, 30mm GIB Nails or 32mm x 7g GIB® Grabber® Dual Thread Screws.

If using the GIBFix® Framing System or if fastening through GIBFix® Angles use only 32mm x 7g GIB® Grabber® Dual Thread Screws.

Fastener centres

50,100,150, 225, 300mm maximum from each corner and then 150mm thereafter around the perimeter of the bracing element. For vertically fixed sheets place fasteners at 300mm maximum centres to the intermediate sheet joints. For horizontally fixed sheets place single fasteners to the sheet edge where it crosses the stud. Use daubs of GIBFix® adhesive at 300mm maximum centres to intermediate studs. Place fasteners no closer than 12mm from paper bound sheet edges and 18mm from any sheet end or cut edge.

JOINTING

Joint strength is important in delivering bracing system performance. All fastener heads stopped and all sheet joints GIB® Joint Tape reinforced and stopped in accordance with the GIB® Site Guide.

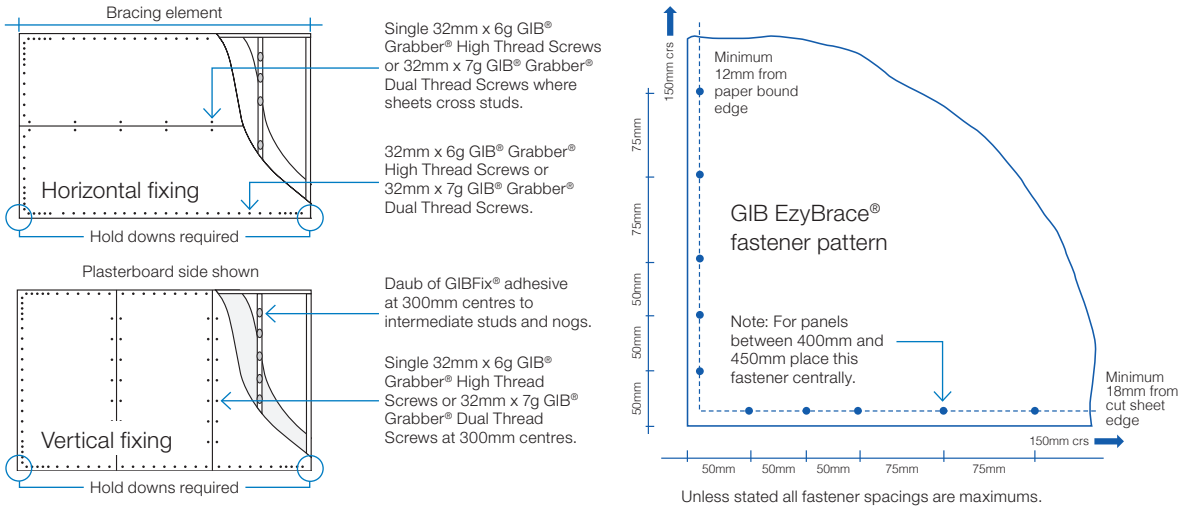

Unless stated all fastener spacings are maximums.

In order for GIB® systems to perform as tested, all components must be installed exactly as prescribed. Substituting components produces an entirely different system and may seriously compromise performance. Follow the specifications. This specification sheet is issued in conjunction with the publication GIB EzyBrace® Systems

GIB EzyBrace® Systems specification BLP-H

Specification code	Minimum length (m)	Lining requirement	Other requirements
BLP-H	0.4	10mm or 13mm GIB Braceline® to one side of the frame plus minimum 7mm structural plywood manufactured to AS/NZ 2269.0 :2012 to the other side	Hold downs

WALL FRAMING

Wall framing to comply with;

- NZBC B1 — Structure; B1/AS1 Clause 3 Timber (NZS 3604:2011).
- NZBC B2 — Durability B2/AS1 Clause 3.2 Timber (NZS 3602).

Framing dimensions and height as determined by NZS 3604:2011 stud and top plate tables for load bearing and non-bearing walls. The use of kiln dried stress graded timber is recommended.

BOTTOM PLATE FIXING

Timber floor

Use panel hold downs at each end of the bracing element. The GIB® HandiBrac is recommended. See details in GIB EzyBrace® Systems or GIB® Site Guide.

Pairs of hand driven 100 x 3.75mm nails at 600mm centres; or Three power driven 90 x 3.15mm nails at 600mm centres.

Concrete floor

Use panel hold downs at each end of the bracing element. The GIB HandiBrac® is recommended. See details in GIB EzyBrace® Systems or GIB® Site Guide. Within the length of the bracing element bottom plates are to be fixed in accordance with the requirements of AS/NZ 2269/0 :2012.

WALL LINING

- A layer of 10mm or 13mm GIB Braceline® to one side of the wall plus minimum 7mm structural plywood manufactured to AS/NZS 2269.0 :2012 to the other side.
- Sheets can be fixed vertically or horizontally.
- Plywood is to be fixed vertically with edges supported.
- Sheet joints shall be touch fitted.
- Use full length sheets where possible.

PERMITTED ALTERNATIVES

For permitted GIB® plasterboard alternatives refer to p. 5 in GIB EzyBrace® Systems literature.

FASTENING THE LINING

Fasteners

GIB Braceline® side: 32mm x 6g GIB® Grabber® High Thread Screws or 32mm x 7g GIB® Grabber® Dual Thread Screws. Plywood: 50 x 2.8mm Galv or Stainless steel annular grooved FH nails. If using the GIBFix® Framing System or if fastening through GIBFix® Angles use only 32mm x 7g GIB® Grabber® Dual Thread Screws.

Fastener centres

GIB® Plasterboard side: 50,100,150, 225, 300mm from each corner and then 150mm thereafter around the perimeter of the bracing element. For vertically fixed sheets place fasteners at 300mm centres to the intermediate sheet joints. For horizontally fixed sheets place single fasteners to the sheet edge where it crosses the stud. Use daubs of GIBFix® adhesive at 300mm centres to intermediate studs. Place fasteners no closer than 12mm from paper bound sheet edges and 18mm from any sheet end or cut edge. Plywood side: 150mm centres to the perimeter of each sheet. GIB® corner fastener pattern does not apply to the plywood side. 300mm centres to intermediate studs.

JOINTING

Joint strength is important in delivering bracing system performance. All fastener heads stopped and all sheet joints GIB® Joint Tape reinforced and stopped in accordance with the GIB® Site Guide.

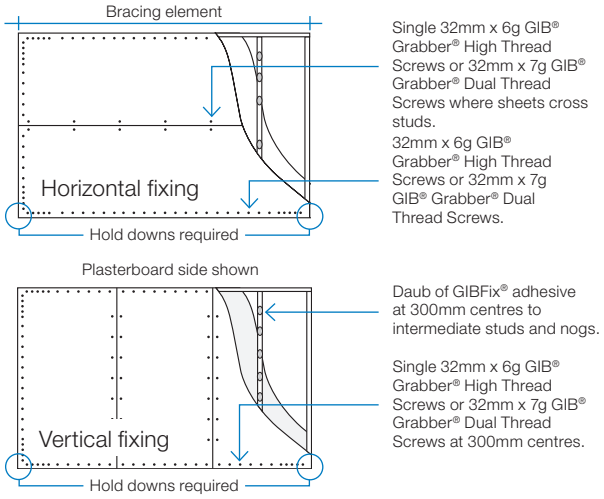

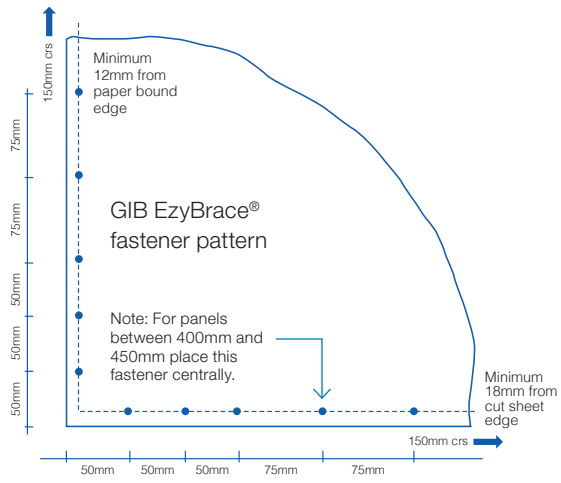

Unless stated all fastener spacings are maximums.

In order for GIB® systems to perform as tested, all components must be installed exactly as prescribed. Substituting components produces an entirely different system and may seriously compromise performance. Follow the specifications. This specification sheet is issued in conjunction with the publication GIB EzyBrace® Systems

SUSTAINABILITY AND THE ENVIRONMENT

Winstone Wallboards is committed to protecting the environment. Environmental matters are integrated into all business activities:

- Our operations strive to exceed all environmental regulatory requirements at all times.
- Protection of the environment is a day to day responsibility that we all must accept.
- We allocate appropriate management time and resources to address relevant environmental issues and continuously improve our activities in that area.
- We will achieve our standards of performance through positive action, employee involvement and constant communication with our neighbours, local authorities and customers.

Minimise on-site waste when designing and/or installing GIB® Systems. For larger projects give consideration to our cut-to-length service to reduce waste. GIB® plasterboard off-cuts, if separated from other waste building materials, can be readily recycled.

For larger projects waste can be diverted to compost manufacturers who grind up the GIB® plasterboard and use it in compost. For smaller projects, the GIB® plasterboard can be ground up and spread around the building site.

GLOBAL GREENTAG^{CERTTM}

The Global GreenTag^{CertTM} certified eco-label acknowledges product as meeting the GreenRate Standard set by Global GreenTag.^{CertTM}

GIB® plasterboard has a Level B green rating.

DECLARE CERTIFICATION

Declare is a database of non-toxic, sustainably sourced building products.

Many GIB® plasterboard products including GIB® Standard, GIB Braceline®, GIB Noiseline® and GIB Aqualine® have achieved Red List Free status in Declare certification.

For more information on Winstone Wallboards sustainability commitments visit gib.co.nz.

COPYRIGHT

Copyright © Winstone Wallboards Ltd 2016. All of the material contained in this brochure, including all text, tables, charts, graphs, drawings, images, diagrams are protected by copyright. These materials may not be reproduced, adapted or transmitted in any form by any process, without the permission of Winstone Wallboards Ltd.

Winstone Wallboards asserts its moral rights and reserves all other intellectual property rights in the materials contained in this brochure and related to GIBFix® Framing System and GIB EzyBrace® Systems.

TRADEMARKS

The names GIB®, GIB Fyreline®, GIB Ultraline®, GIB Braceline®, GIB Toughline®, GIB Noiseline®, GIB Aqualine®, GIB Nail®, GIB Tradeset®, GIB Plus 4®, GIB-Cove®, GIB Lite Blue®, GIBFix®, the colour mauve for GIB Toughline®, GIB HandiBrac®, GIB EzyBrace®, the colour blue for GIB Braceline®, the colour pink for GIB Fyreline®, the colour green for GIB Aqualine®, and the shield device are registered trademarks of Fletcher Building Holdings Limited.

PATENTS

GIBFix® Framing System and GIB EzyBrace® Systems, including componentry and design method, have patents pending (NZ Patent Number 596691, NZ Patent 709159 pending) and design and other IP rights.



FOR MORE INFORMATION VISIT

gib.co.nz

OR CALL THE GIB® HELPLINE

0800 100 442

GIB Standard Plasterboard

Product Technical Statement: 101955

miproducts
THE NATIONAL PRODUCT DATABASE

GIB® Standard plasterboard is an economical lining material available in 10mm and 13mm thicknesses.
View miproducts listing

☒ Appraisal Company	GIB confirms that this minimum level of assurance has been met or exceeded by the following: GIB Technical Data

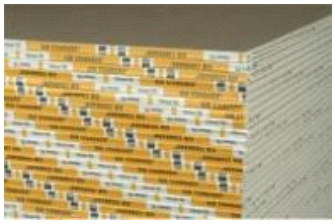

masterspec partner

Company Contact Details

GIB

Company:	Winstone Wallboards Ltd
Physical Address:	37 Felix Street Penrose AUCKLAND
Postal Address:	PO Box 12256 Penrose AUCKLAND
Telephone:	64 09 6330100
Fax:	64 09 6330101
Email:	info@gib.co.nz
Website:	www.gib.co.nz

Technical Statement

Product Description

GIB® Standard plasterboard is an economical lining material available in 10mm and 13mm thicknesses.

13mm GIB® Standard plasterboard is recommended for use on ceilings as it is stronger and more rigid than 10mm GIB® Standard plasterboard.

Sheets have a width of 1200mm and are available in 2400, 2700, 3000, 3300, 3600, 4200, 4800 and 6000mm lengths - see the selector chart for more information.

GIB Standard plasterboard is available with both edges tapered to allow for flush finishing, or with 1 tapered, 1 square edge to provide a flat surface for finishing trims when fixing horizontally

New Zealand Building Code (NZBC)

The product will, if employed in accordance with the supplier's installation and maintenance requirements, assist with meeting the following provisions of the building code:

Notes

Evidence

The product meets the requirements set out in the following documents, or relevant parts of cited standards within the documents:

Supporting Evidence

The product has and can make available the following additional evidence to support the above statements:

CodeMark

BRANZ Appraisal

Use in Service History

Product Criteria

Installation requirements

GIB® Standard must be installed in accordance with the manufacturer's Technical Literature.

Warrantees

Company Product Information

Relationships

GIB
Technical Data

Environmental Choice New Zealand

Date last validated: **12 July 2017**

Date last updated: **12 July 2017**

Disclaimer: The Product Technical Statement (PTS) template is copyright to Construction Information Limited. However the content of this PTS is the responsibility of the product manufacturer/supplier. Refer to the miproducts Terms and Conditions

GIB® Goldline™ Platinum

Tape-On Trims



- Made with a patented, high quality paper laminated to galvanised steel forms.
- Simply installed by embedding directly into the joint compound
- No need for fasteners, so there's no chance of fastener popping
- Significantly reduces the risk of cracking because the trim is not directly fastened to the frame

Introduction

GIB® Goldline™ Platinum paper-faced metal trims are made with a patented, high quality paper laminated to galvanised steel forms. The metal provides maximum strength and protection for the corner, while the paper provides reinforcement to reduce cracking caused by the movement or shrinkage of framing members. The result is a clean, precise corner that is long lasting, provides superior resistance to edge cracking, rust resistance and is not subject to fastener popping.

Features

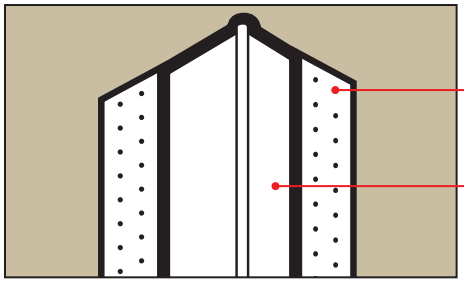

Strong paper tape provides reinforcement to significantly reduce the risk of cracking caused by movement or shrinkage of framing.

Galvanised steel provides strength and protection for corners and increased rust resistance.

- GIB® Goldline™ Platinum's paper is resistant to scuffing, fluffing and damages caused by sanding and plasterboard knives and trowels.
- The paper flange bonds well to the joint compound to reduce the risk of cracking caused by any minor movement and shrinkage of framing members.
- GIB® Goldline™ Platinum Tape-On Trims are easily installed without the need for fasteners using GIB® joint compound so nail popping is not a problem.
- Paper-face provides superb resistance to chipping due to excellent compound and paint adhesion.
- Galvanized coated steel provides exceptional corrosion resistance.
- Easy to adjust during application resulting in a clean, precise corner.
- Available in a wide variety of widths and profiles to suit any plasterboard application.
- Meets or exceeds specifications laid out in ASTM C1047.

Applications

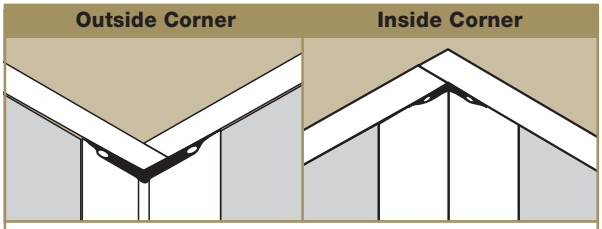

Standard Outside and Inside Corners for most square corner applications

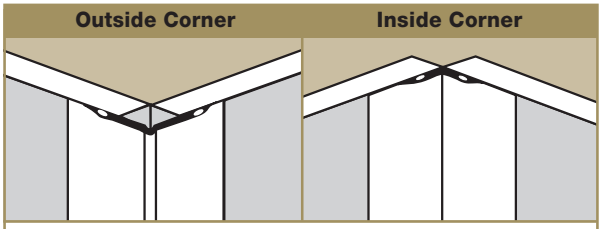

Offset Outside and Inside Trims designed for 135˚ corners

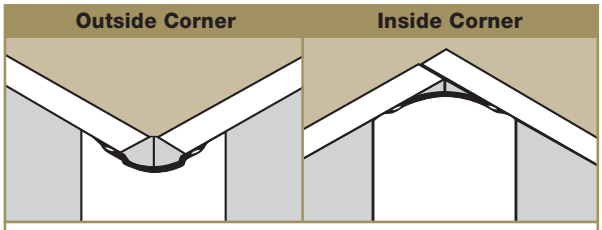

Bullnose Corners add contemporary styling to plasterboard partitions

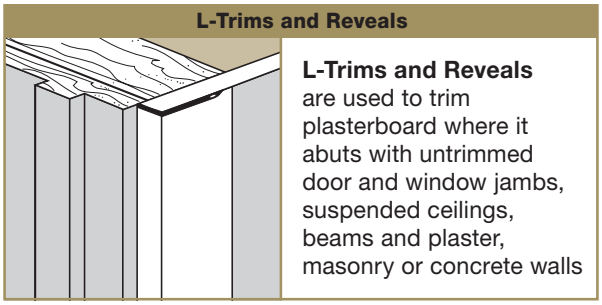

L-Trims and Reveals are used to trim plasterboard where it abuts with untrimmed door and window jambs, suspended ceilings, beams and plaster, masonry or concrete walls

Square Tape-On Trims



GIB® Goldline™ Platinum Square Tape-On Trims create clean lines and precise square corners. The traditional styling of these corners provide sharp lines which give architectural details such as paint transitions and step bulkheads a more dramatic look.

GIB® Goldline™ Platinum Square Tape-On Trims offer a wide selection of profiles for use on 90˚ outside/inside and 135˚ off angle outside/inside corners to accommodate any thickness of plasterboard. GIB® Goldline™ Platinum Square Tape-On Trims can be quickly and easily installed using GIB® joint compound, so there is no chance of fastener popping.

Square Tape-On Outside Corners

TYPE		DIMENSIONS A	B	C	D	PROFILE	AVAILABILITY
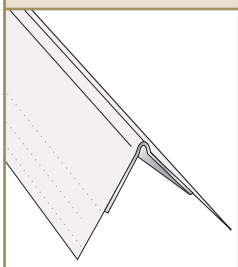	G1-W STANDARD	22mm	13mm	19mm	22mm	90˚  STANDARD	2.4m, 2.7m, 3.0m
	G1-U WIDE EQUAL LEG	19mm	19mm	19mm	19mm		
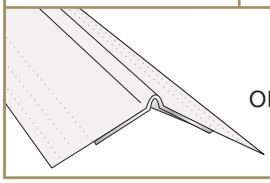	G1-O OFF ANGLE	16mm	19mm	13mm	16mm	135˚ OFF ANGLE 	2.4m, 3.0m

Square Tape-On Inside Corners

TYPE		DIMENSIONS A	B	C	D	PROFILE	AVAILABILITY
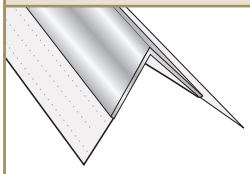	G2 STANDARD	16mm	10mm	10mm	16mm	90˚ 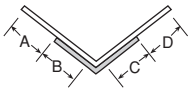 STANDARD	2.4m, 2.7m, 3.0m
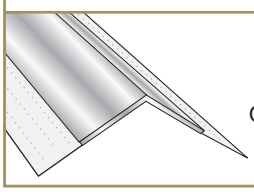	G2-O OFF ANGLE	16mm	19mm	19mm	16mm	135˚ 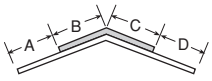 OFF ANGLE	2.4m, 3.0m

Bullnose Tape-On Trims



GIB® Goldline™ Platinum Bullnose Tape-On Trims create a smooth rounded corner giving a sense of openness and contemporary style to any room. The bullnose profile also assists with safety around the home. Any knocks or impact to the rounded corners are less likely to cause injury and/or chip the corner.

GIB® Goldline™ Platinum Bullnose Tape-On Trims are suitable for 10mm, 13mm and 16mm plasterboard and are quickly and easily installed using GIB® joint compound. The result is a strong corner that is not subject to fastener popping. Available in outside/inside 90˚ and outside 135˚ off angle corners.

Bullnose Tape-On Outside Corner

TYPE	DIMENSIONS			PROFILE	AVAILABILITY
	A	RADIUS	B		
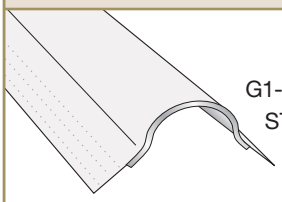 G1-B OUTSIDE STANDARD	22mm	19mm	22mm	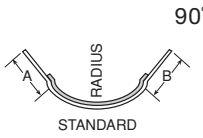	2.4m, 2.7m, 3.0m
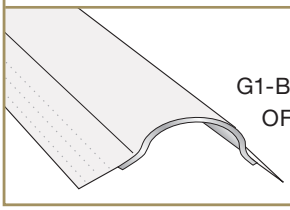 G1-BO OUTSIDE OFF ANGLE	25mm	19mm	25mm	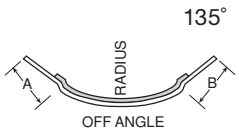	3.0m

Bullnose Tape-On Inside Corner

TYPE	DIMENSIONS			PROFILE	AVAILABILITY
	A	RADIUS	B		
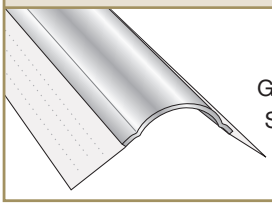 G2-B INSIDE STANDARD	22mm	19mm	22mm		2.4m, 3.0m

Tape-On L-Trims & Reveals



GIB® Goldline™ Platinum Tape-On L-Trims and Reveals are used to finish rough edges of plasterboard where it abuts other building components such as suspended ceilings, beams, masonry or concrete walls, untrimmed door and window jambs and bi-fold door openings. All of these trims can be quickly and easily installed using GIB® joint compound, leaving a strong finish that is not subject to fastener popping. Available in a wide variety of sizes, suitable for most applications.

GIB® Goldline™ Platinum Tape-On L-Trims and Reveals can also be used together to form control joints in large areas, providing an attractive architectural finish.

Tape-On L-Trims

TYPE		DIMENSIONS			PROFILE	AVAILABILITY
		A	B	C		
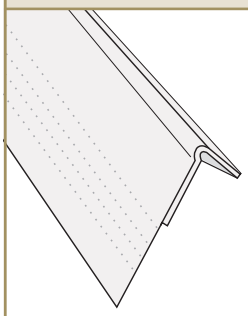	G4 9.5mm Use with 10mm GIB® plasterboard	12mm	27.5mm	30mm	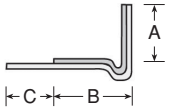	2.4m, 3.0m
	G4 12.5mm Use with 13mm GIB® plasterboard	15mm	27.5mm	30mm		

Tape-On Reveals

TYPE		DIMENSIONS				PROFILE	AVAILABILITY
		A	B	C	D		
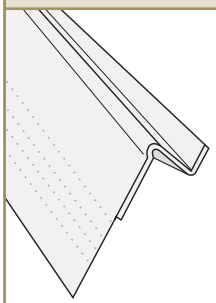	GR 13mm x 13mm Use with 10mm GIB® plasterboard	13mm	13mm	27mm	30mm	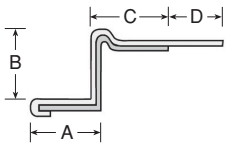	3.0m
	GR 13mm x 16mm Use with 13mm GIB® plasterboard	13mm	16mm	25mm	30mm		

Installation

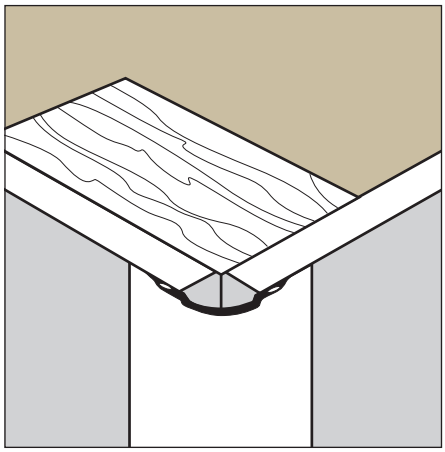

GIB® Goldline™ Platinum Tape-On Trims are simply installed by embedding directly into the joint compound. There's no need for fasteners, so there's no chance of fastener popping. Because the trim is not directly fastened to the frame, the risk of cracking is significantly reduced.

A slightly thinner mix of compound is recommended for the installation of GIB® Goldline™ Platinum Tape-On Trims because it provides better paper adhesion. This means adding a little more water when mixing up the compound. Setting and premix compounds designed for embedding must be used. ie; do not use finishing compounds for the first two coats.

When you are installing external Bullnose Corners, check that the plasterboard edges do not extend past the corner of the framing substrate on either side (see figure). If the plasterboard edges do protrude, simply trim them back prior to commencing installation.

External

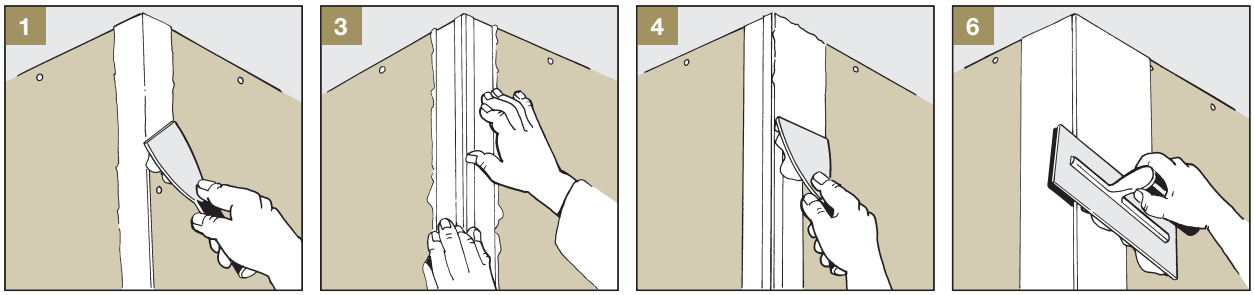

1. Apply a 75mm wide band of GIB® joint compound to each side of the GIB® plasterboard corner.
2. Cut trim to required length and position over the joint compound. Allow 10mm at the bottom for expansion and contraction of framing members, and mitre any corners which will be abbuting other trims at corners.
3. Press the trim firmly into the compound, evenly along its full length, thus embedding the paper tape and forcing out excess compound. The installation of the trim may be performed with the aid of a corner roller.
4. Using a 100mm broad-knife, wipe off surplus compound and eliminate all air bubbles under the paper. Be careful not to remove all compound.
5. Flush the joint with a 150mm broad-knife or trowel using additional compound. Remove any excess jointing compound on the nose of the trim by wiping with a damp sponge.
6. Allow to harden and dry, then apply a light top coat of GIB® finishing compound. This is done using a large (250-300mm wide) finishing knife or trowel, and applying compound in a band about 200mm wide. Level the compound by drawing the knife along the trim with one edge of the blade riding on the nose of the trim and the other on the surface of the GIB® plasterboard.
7. Repeat for the other side of the trim. Allow to dry.
8. Apply a second top coat of GIB® finishing compound once previous coat is dry. Feather the edges of each coat about 50mm beyond the preceding coat, and again wiping the trim with a damp sponge. When the top coat is completely dry, lightly sand taking care not to scuff the face paper of the GIB® plasterboard.

Internal

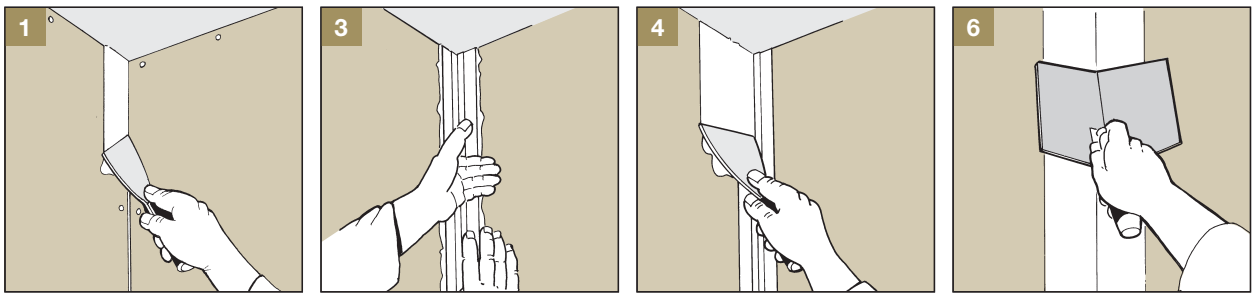

Inside corners are installed similarly to outside corners except usually only one top coat of GIB® finishing compound is required. A corner roller may be used to apply and smooth the compound if desired.

GIB® Goldline™ Platinum products

Manufactured by Bailey Metal Products Limited.

Distributed nationwide by authorised GIB® distributors.

Winstone Wallboards Ltd accepts no liability if GIB® Goldline™ Platinum tape-on trims are not installed in strict accordance with the instructions contained in this publication.

Use only the current specification

This publication may be superseded by a new publication. Winstone Wallboards accepts no liability for reliance upon publications that have been superseded. You should check the current index of publications on www.gib.co.nz before using this publication. If you are unsure whether this is the current publication, simply call the GIB® Helpline on 0800 100 442.

Trademarks

The names GIB® and GIB Tradeset® are registered marks of Fletcher Building Holdings Limited.
The name Goldline™ is a trademark of Bailey Metal Products Limited.

Copyright © Winstone Wallboards Ltd 2004



Winstone Wallboards Limited

37 Felix Street, P O Box 12256
Penrose, Auckland, New Zealand
Phone 64-9-633 0100, Facsimile 64-9-633 0101
Internet website: http://www.gib.co.nz
E-mail: info@gib.co.nz



Platinum is a series of Goldline™



DRYWALL TRIMS

GIB® Helpline: Telephone 0800 100 442 Facsimile 0800 229 222

Patent New Zealand 302378

Printed January 2006 Ref: CBI 5113

GIB® Product and System Warranty

WE ARE 100% BEHIND OUR PRODUCTS AND SYSTEMS

If any of our products or systems* fail to perform as claimed or an issue associated with any GIB® product or system does occur, Winstone Wallboards will work with the relevant parties to help resolve the issue.

YOU'RE PROTECTED WITH GIB® PLASTERBOARD SYSTEMS

BRANZ Appraised
Appraisal No. 427 [2007], 940 [2016], 928 [2016], 394 [2017], 289 [2018], 1048 [2019]

For over 90 years, building professionals have relied on GIB® plasterboard systems. Locally made for local conditions, they meet or exceed the New Zealand Building Code, are BRANZ appraised and are backed by full technical information and support to give complete confidence in using GIB® Plasterboard Systems*.

*When installed and maintained strictly in accordance with the relevant Winstone Wallboards literature current at the time of installation and under normal conditions of dry internal use, unless otherwise permitted in GIB® literature.

Winstone Wallboards is committed through its heavy investment in quality management and technical support to ensure that GIB® products and systems perform as claimed. Comprehensive statements of 'fitness for purpose', functional performance and code compliance (including durability) are contained in GIB® literature and in the relevant BRANZ Appraisal.

SYSTEM AND PRODUCT COMPONENTS

A system is a group of related product components that interact to perform a task. Ensure the full GIB® building system, including the appropriate GIB® branded products, are specified and installed. This will ensure performance is not compromised and that any failure that is attributable to GIB® products and/or systems will be supported. Winstone Wallboards is unable to support system performance where substitute products are used as these have not been tested by us as part of our systems and we cannot be responsible for the ongoing quality and performance of these products.

PRODUCT AND SYSTEM WARRANTY

The Winstone Wallboards warranty covers GIB® products and/or systems for a minimum of 10 years from the date of purchase. Individual GIB® products are always covered by the GIB® product warranty even if these are not used as part of a full GIB® system. Winstone Wallboards warrants that GIB® products will be free from defects caused by factory workmanship or materials and, subject to compliance with the conditions attached, that the product or system will perform to the extent set out in relevant Winstone Wallboards published literature current at the time of installation. Nothing in this document shall exclude or modify any legal rights a customer may have under the Consumer Guarantees Act or otherwise which cannot be excluded or modified at law. This Product and System Warranty is transferable to subsequent owners of the building.

NZ BUILDING CODE CLAUSE B2 - DURABILITY

The New Zealand Building Code sets the required durability standard for specific elements of building work. Clause B2 Durability aims to ensure that building elements and buildings are durable enough so all other objectives of the Building Code are satisfied throughout the life of the building, without the need for reconstruction or major renovation.

GIB® SYSTEMS DURABILITY

The following systems have, unless stated otherwise in the technical literature, a serviceability life in excess of that stated and satisfy the requirements of NZBC Clause B2 Durability.

15 YEARS

— GIB Aqualine® Wet Area Systems
— GIB Weatherline® Rigid Air Barrier Systems**

** 50 years where the cladding durability requirement is 50 years.

50 YEARS

— GIB® Fire Rated Systems
— GIB EzyBrace® Systems
— GIB X-Block® Systems
— GIB Noise Control® Systems

© COPYRIGHT WINSTONE WALLBOARDS LTD 2019

CONDITIONS OF WARRANTY:

This warranty is subject to the following conditions.
Nothing in these conditions excludes or modifies any legal rights a customer may have under the Consumer Guarantees Act or otherwise which cannot be excluded or modified at law:
(a) Receipt of your written claim as soon as practicable but in any event within 30 days after the defect would have become reasonably apparent or, if the defect was reasonably apparent prior to installation, then the claim must be made prior to installation. We may also request written proof of purchase as a condition to considering your claim;
(b) The project must be designed and constructed in strict compliance with all relevant provisions of the current New Zealand Building Code, and in compliance with other regulations and standards that apply to the project;
(c) This warranty only applies to the initial application of the product and/or system where used and maintained in accordance with the relevant Winstone Wallboards product and/or system literature (including GIB® Site Guide instructions, GIB® Systems details and GIB® Plasterboard Lining Systems Care and Maintenance document), other manufacturers' instructions (where applicable if the GIB® products and/or systems are attached to, or dependent on, other manufacturers' products) and good trade practices current at the time of installation, under normal conditions of dry internal use (unless otherwise permitted in GIB® literature), and does not apply to reuse of any product after initial installation;
(d) If a claim under this warranty is covered, we will work with you to find a solution, which might involve product replacement and assistance with replacement work. Any recoating of GIB® products may result in slight colour differences between the original and replacement GIB® products. Depending on the situation, notwithstanding the foregoing, Winstone Wallboards will, at its option, (1) supply replacement product, (2) rectify the affected product or (3) pay for the cost of the replacement of the affected product.

Winstone Wallboards will not be liable for any losses or damages arising as a result of the breach of warranty or the defective product or systems, other than as set out in this paragraph (d);
(e) This warranty does not apply to, and Winstone Wallboards will not be liable for, any claims, damages or defects arising from or in any way attributable to events outside of Winstone Wallboards' control including, but not limited to, poor workmanship or poor design/detailing, settlement or structural movement, failure in and/or movement of materials to which the product is attached or dependent on, performance of paint/coatings applied to the product, normal wear and tear, organisms or growths on or within the product, or any acts of God;
(f) GIB® Systems have been tested and approved to work together as a full building system as set out in GIB® literature and are supported as outlined in the GIB® Product and System Warranty. For any guidance, recommendation, review, information, or assistance ("Guidance") we provide that may fall outside of GIB® Systems and Product literature, we endeavour to provide helpful Guidance based on the information provided to us at the time on an all care, no liability basis. It remains the full responsibility of the receiver of the Guidance to ensure the adequacy and appropriateness of any course of action taken on the project and application it is being used in;
(g) To the extent permitted by law, all warranties, conditions, liabilities and obligations other than those specified in this warranty are excluded.

Before using this publication check whether it is the current publication by calling the GIB® Helpline weekdays on 0800 100 442 or visit gib.co.nz

Winstone Wallboards Limited
37 Felix Street, Penrose 1061
PO Box 12256, Penrose 1642
Auckland, New Zealand
Phone: +64 9 633 0100
Fax: +64 9 633 0101
Website: www.gib.co.nz
Email: info@gib.co.nz
GIB® Helpline: 0800 100 442
Fax: 0800 229 222

Note: To obtain copies of Winstone Wallboards Ltd literature or BRANZ Appraisals, please contact the GIB® Technical Helpline 0800 100 442 or download from gib.co.nz.

Related BRANZ Appraisals can also be downloaded from www.branz.co.nz/appraisals.

© COPYRIGHT WINSTONE WALLBOARDS LTD 2019

CBI 5113
AUG 2012

GIB® RONDO® METAL BATTEN SYSTEMS

SYSTEM AND INSTALLATION MANUAL



GIB® Rondo® Metal Batten Systems

Specification and installation guide

- Suitable for Residential and some commercial applications
- GIB® Rondo® metal battens are the recommended system for use in ceilings in conjunction with 13mm GIB® plasterboard
- Easy to install; achieve a flat and true ceiling
- A stable substrate that reduces the risk of costly call backs

GIB® Rondo® Metal batten systems

Winstone Wallboards accepts no liability if the system is not installed in strict accordance with the instructions contained in this publication.

Use only the current specification

This publication may be superseded by a new publication. Winstone Wallboards accepts no responsibility for reliance on superseded publications. Call 0800 100 442 or visit www.gib.co.nz to confirm the currency of the publication.

Beware of substitution

The performance of GIB® Rondo® Metal batten systems is very sensitive to design detailing and specification. It is important that only GIB® Rondo® branded products are used in the systems contained in this publication. No responsibility will be accepted for alternative manufacturers product.

Customised design solutions

The systems detailed in this publication should cover most commonly encountered situation. For projects where specific performance is required please contact our technical support team on 0800 100 442.

CONTENTS

AUGUST 2012

Introduction **3**
Why Metal? 3

GIB® Rondo® 310 Ceiling Batten System **4-5**
GIB® Rondo® 310 Ceiling Batten System 4-5
GIB® Rondo® 310 Span Tables 5

GIB® Rondo® 308 Ceiling Batten System **6-7**
GIB® Rondo® 308 Ceiling Batten System 6-7
GIB® Rondo® 308 Span Tables 7

GIB® Rondo® Components **8-9**
GIB® Rondo® Ceiling Diaphragms 8
GIB® Rondo® Wall Strapping Systems 8
GIB® Rondo® and Noise Control 9

Suspended Ceiling Systems **10-11**

Notes **12**

INTRODUCTION

AUGUST 2012

WHY METAL?

A large proportion of ceiling defects such as peaking or cracked joints and popped fasteners can be attributed to movement in the substrate. Timber ceiling substrates are more prone to temperature or moisture induced movement and shrinkage. These issues tend to impact on the surface of the plasterboard and can result in call-backs. Metal ceiling batten systems provide a stable substrate for plasterboard ceiling linings. Regular users of metal batten systems consistently have fewer call-backs for movement related ceiling defects such as peaking or cracked joints and popped fasteners.
Once builders change to GIB® Rondo® metal battens they appreciate the simple installation methodology and enjoy reduced callbacks. Very few, if any, revert back to using timber.

Benefits of steel battens include;

- Consistent performance
  - Less influence from moisture or environmental factors than timber. Unlike timber battens which can vary in grade, species with temperature and humidity, the performance of GIB® Rondo® metal battens is consistent throughout New Zealand
- Lighter weight
  - Lower transport costs and easier to handle on site
- Require less storage space
  - Storage space is often at a premium on building sites and a house-lot of GIB® Rondo® componentry will occupy substantially less space on site than timber battens
- Easy to achieve a flat, stable substrate
  - This results in a trouble free ceiling and reduces the risk of costly call-backs

Benefits of GIB® Rondo® metal batten systems

- Versatility
  - The extensive componentry range provides solutions to a multitude of situations
- Technical back up
  - Our well established and highly rated technical team are available to quickly and efficiently handle any enquiries, call us on 0800 100 442
- Flexibility
  - GIB® Rondo® metal batten systems can be used on residential and some commercial ceilings. Components are also available for use in wall strapping situations and have been tested and approved for use in GIB® noise control systems

There are two systems to select from;

GIB® Rondo® 310 metal batten system – (35mm battens)
The GIB® Rondo® 310 metal batten system comprises a 35mm deep batten. The recommended method of fixing is to use clips as illustrated below.
This provides a flat substrate for the plasterboard ceiling as it is able to compensate for any deviations in the framing.
If the substrate is consistently flat the battens can be attached directly to the underside of the framing.

GIB® Rondo® 308 metal batten system – (16mm battens)
The GIB® Rondo® 308 ceiling batten is a light weight system based on a 16mm deep batten fixed to a clip attached to the ceiling framing as shown.

310 METAL BATTEN		308 METAL BATTEN
 Batten on clips	 Direct fix	 Batten on clips

IMPORTANT NOTE:
Manufactured from 0.55BMT steel with a Z275 coating exceeding the NZBC durability requirements for interior use

GIB® RONDO® 310 METAL BATTEN SYSTEM

AUGUST 2012

GIB® RONDO® 310 CEILING BATTEN SYSTEM

The GIB® Rondo® 310 system forms a strong, stable and flat substrate for ceilings in residential and commercial applications. The 35mm dimension allows it to be directly substituted into ceilings where 35mm timber battens would traditionally have been used. Consult an electrical contractor for any earthing requirements that may need to be incorporated.
There are two methods of fixing GIB® Rondo® 310 metal battens.

Recommended method
Clipped using either;
- 311 clip for a drop of 0-30mm
- 313 clip where a larger drop is required between the bottom of the truss chord, joist or rafter and the back of the ceiling batten a drop of up to 130 mm can be achieved in order to accommodate services or variations in framing heights
- GIB Quiet Clip® for use in GIB® Noise control systems

Alternative method
- Directly by fastening with pairs of min GIB Grabber® 32mm x 8g wafer head screws through the flange (consult span tables pg 5)
- Alternatively pairs of min 45mm x 2.8mm FH nails can be used
- For fixing to steel framing a drill tip screw is recommended

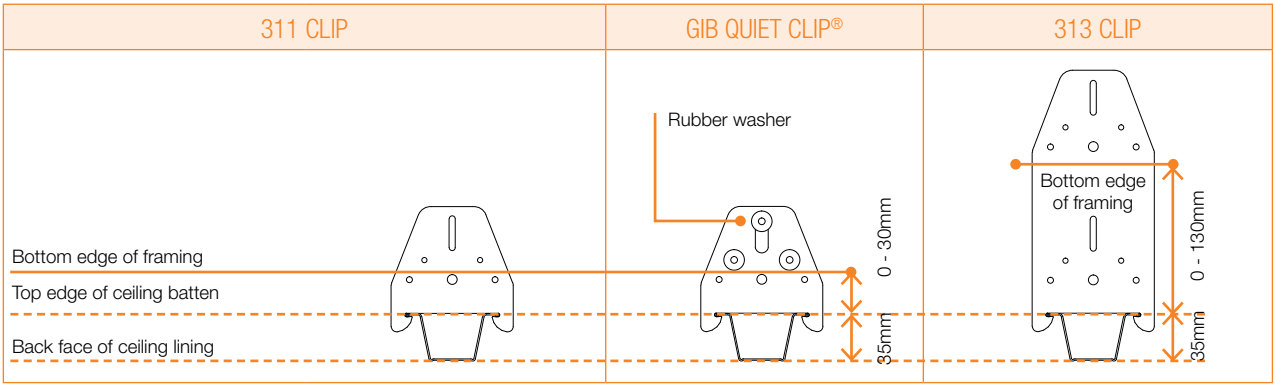

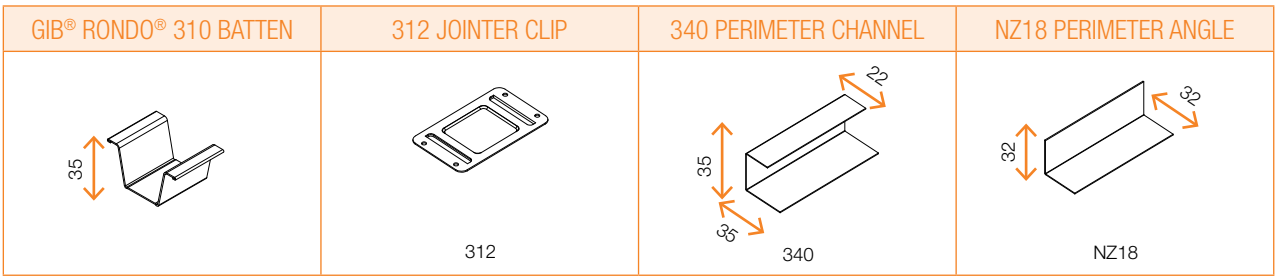

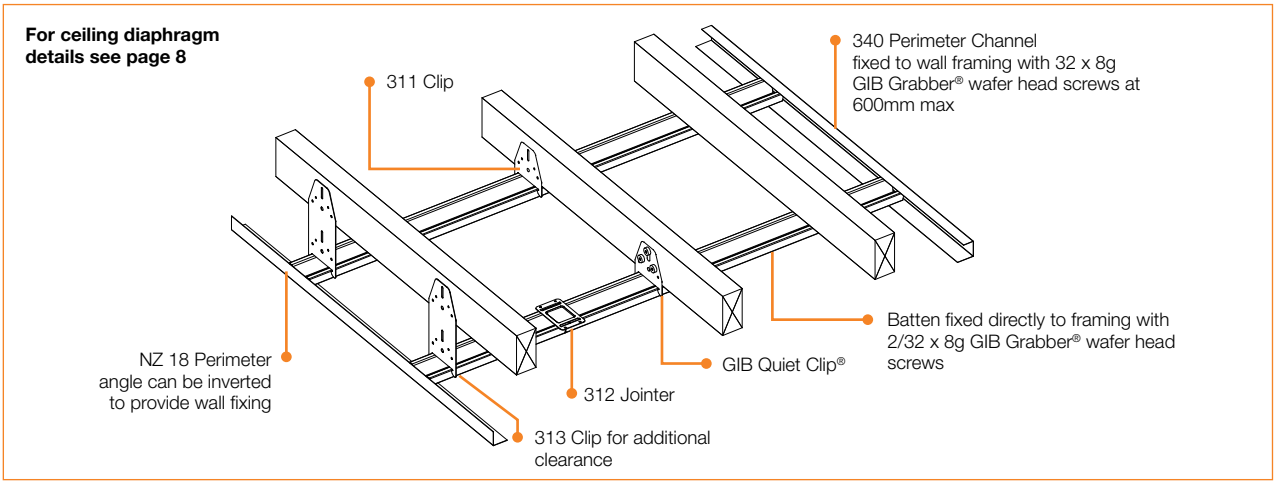

GIB® RONDO® 310 METAL BATTEN SYSTEM

AUGUST 2012

GIB® RONDO® METAL BATTEN SYSTEM INSTALLATION INSTRUCTIONS

Consult an electrical contractor for any earthing requirement that may need to be incorporated

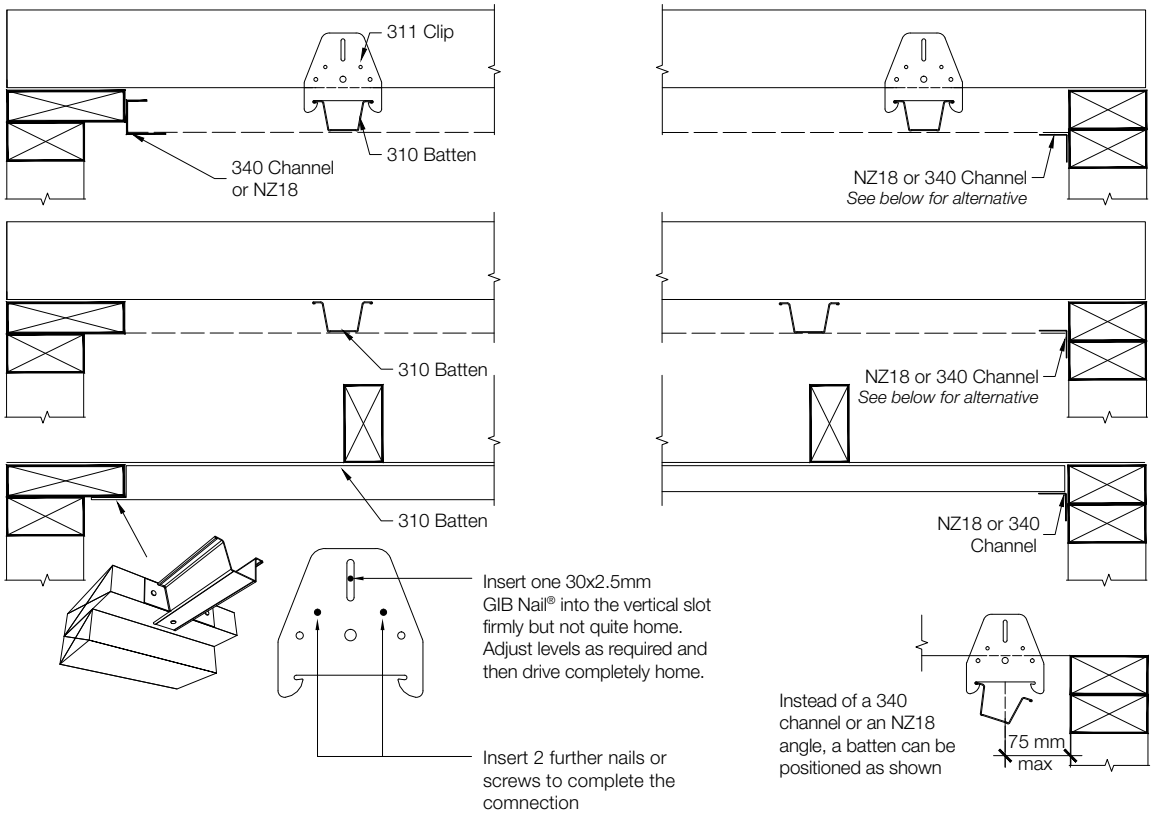

- Establish a datum line for the ceiling
- Place a string line on the datum line at right angles to the battens, under the truss or joist closest to the centre of the room
- Install GIB® Rondo® clips at 600mm centres (450mm for 10mm plasterboard) using the string line to establish the correct position
- Cut the batten to the required length using snips or a hacksaw
- Insert the batten into the channel at each end and fit into the clip
- Install remainder of clips ensuring that the batten is straight and flat

GIB® Rondo® 310 Batten Span Table for Residential Internal Applications

GIB® Plasterboard thickness Single layer	Maximum batten spacing (mm)	Multi Span (mm)	Single Span and Garages (mm)
10mm	450	1200	900
13mm	600		

For situations not covered by this chart please contact the GIB®Helpline on 0800 100 442

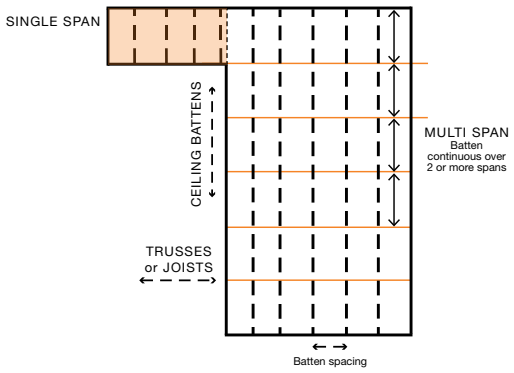

GIB® RONDO® 308 METAL BATTEN SYSTEM

AUGUST 2012

GIB® RONDO® 308 METAL BATTEN SYSTEM

The GIB® Rondo® 308 system is a light weight yet very strong ceiling batten. In addition to its function as a ceiling batten it can also be used as a wall furring channel and is an integral part of GIB® Noise control systems. *See page 9 for details.*
Consult an electrical contractor for any earthing requirements that may need to be incorporated.

The GIB® Rondo® 308 system is installed using either;

- 226 clip for a drop of 0-30mm
- 394 clip where a larger drop is required between the bottom of the truss chord, joist or rafter and the back of the ceiling batten. Up to 130 mm clearance between the bottom of the framing and the back of the batten of can be achieved in order to accommodate services or variations in framing heights

Note: If the 308 system is to be used in a ceiling diaphragm, the batten needs to secured directly to the framing.
See page 8 for details.

226 CLIP



394 CLIP

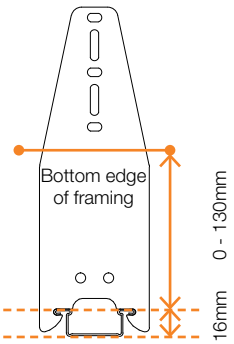

GIB® RONDO® 308 BATTEN

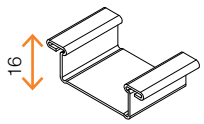

138 JOINTER

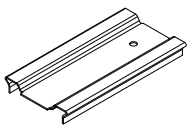

138

142 PERIMETER CHANNEL

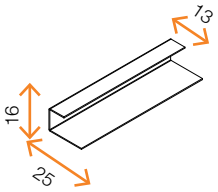

142

NZ 18 PERIMETER ANGLE

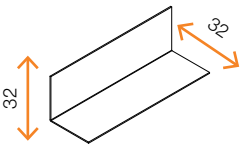

NZ18

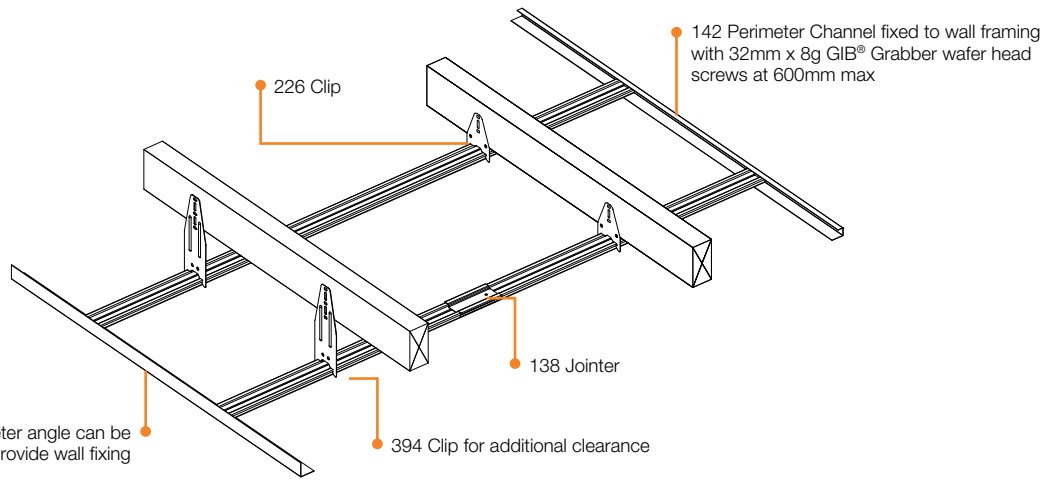

GIB® RONDO® 308 METAL BATTEN SYSTEM

AUGUST 2012

GIB® RONDO® METAL BATTEN SYSTEM INSTALLATION INSTRUCTIONS

Consult an electrical contractor for any earthing requirement that may need to be incorporated.

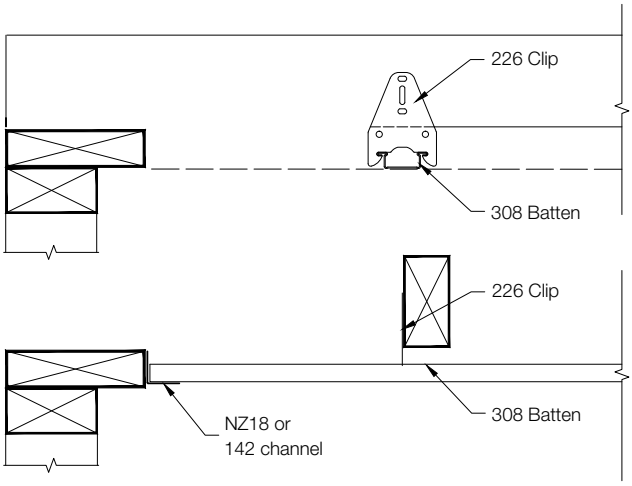

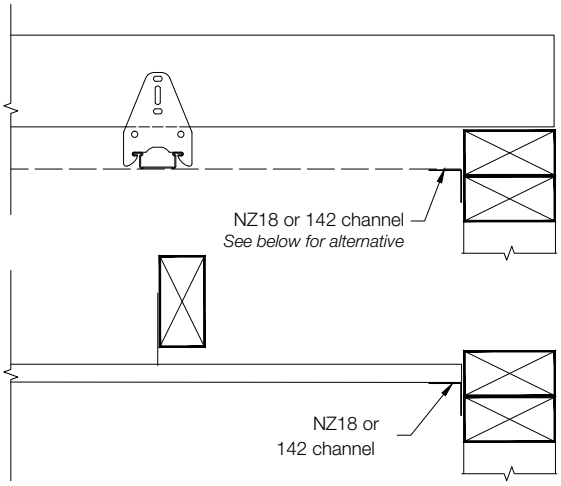

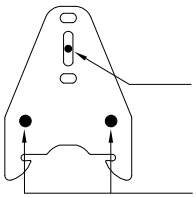

Insert one 30x2.5mm GIB Nail® into the vertical slot firmly but not quite home. Adjust levels as required and then drive completely home.

Insert 2 further nails or screws to complete the connection

Instead of a 142 channel or an NZ18 angle, a batten can be positioned as shown

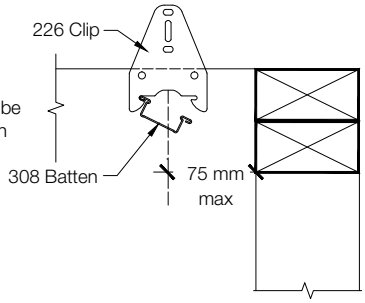

- Establish a datum line for the ceiling
- Place a string line on the datum line at right angles to the battens, under the truss or joist closest to the centre of the room
- Install GIB® Rondo® clips at 600mm centres (450mm for 10mm plasterboard) using the string line to establish the correct position
- Cut the batten to the required length using snips or a hacksaw
- Insert the batten into the channel at each end and fit into the clip
- Install remainder of clips ensuring that the batten is straight and flat

GIB® Rondo® 308 Batten Span Table for Residential Internal Applications

GIB® Plasterboard thickness Single layer	Maximum batten spacing (mm)	Multi Span (mm)	Single Span and Garages (mm)
10mm	450	1200	900
13mm	600		

For situations not covered by this chart please contact the GIB®Helpline on 0800 100 442

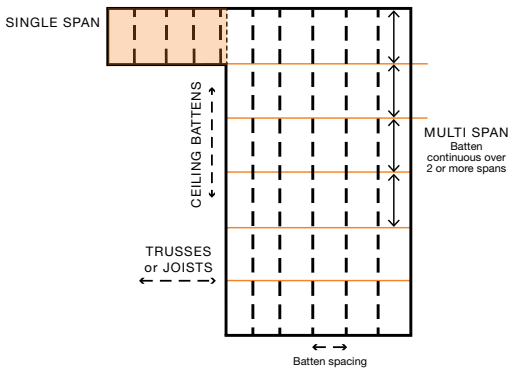

GIB® RONDO® COMPONENTS

AUGUST 2012

Ceiling Diaphragms using GIB® Rondo® Metal Battens

GIB® Rondo® metal batten systems may be used in ceiling diaphragms as required for GIB Ezybrace® systems provided that;

- The batten is either fixed directly to the underside of the ceiling framing OR
- The batten is fixed to a block or continuous member that has been securely attached to the ceiling framing with 4x90mm nails (minimum)

NOTE: It is not acceptable to install a ceiling diaphragm on clips without additional support as shown below:



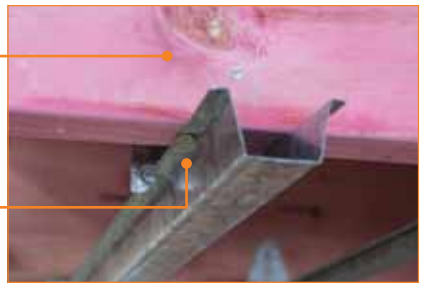

CEILING DIAPHRAGM PERIMETER

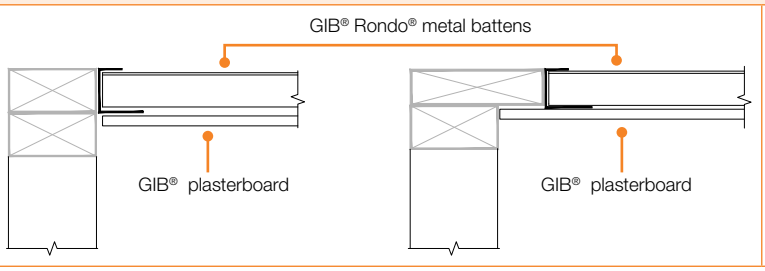

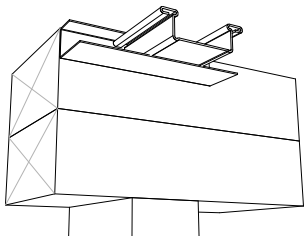

Perimeter channel, (340, 142 or 140) to be fixed with 32mm x 8g GIB® Grabber® wafer head screws at 300mm centres

CHANGE IN PLANE

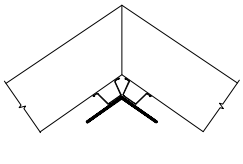

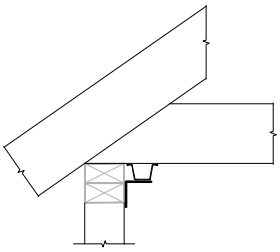

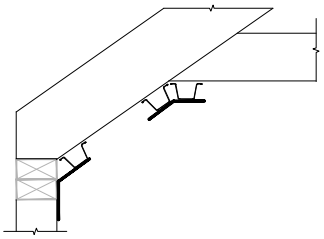

Changes in plane can be achieved by attaching a folded metal angle to the junction.

- Minimum 0.55mm BMT
- Fastened on each edge using 2.8mm x 30mm GIB® Nails or 32mm x 8g GIB® Grabber® wafer head screws at 300mm centres
- Plasterboard linings to be fastened to each edge of the folded angle at 150mm centres

GIB® Rondo® wall strapping systems

In addition to the ceiling batten function the GIB® Rondo® 308 batten system can be used as a wall strapping channel for masonry or concrete wall construction. The adjustable length masonry anchor allows insulation to be installed if required.

A239 CLIP	237 CLIP
Threaded hole, Masonry anchor included (100mm or 180mm)	Unthreaded hole, No masonry anchor included Suitable for timber or masonry application

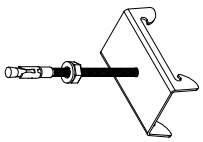

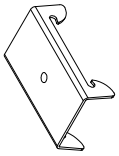

GIB® RONDO® COMPONENTS

AUGUST 2012

The A239 clip can be used in conjunction with the 308 batten to provide an effective wall strapping solution. If required polystyrene insulation can be fitted over the anchor bolts. A239 clips should be spaced at 1200mm centres vertically (max) and 600mm centres horizontally (max).

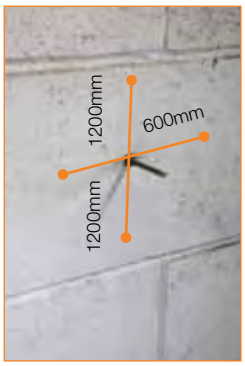









GIB® Rondo® and Noise Control

GIB® Rondo® metal batten systems play an important part in GIB® Noise control systems.

GIB QUIET CLIP®



The GIB Quiet Clip® has rubber grommets that provide isolation between the ceiling and the ceiling framing. Installation is the same as for the 311 clip.

ST001 ACOUSTIC MOUNT





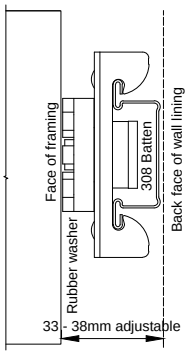

The ST001 clip has a threaded rubber washer to provide isolation from the wall framing. The thread allows the clip to be adjusted to compensate for framing deviations. The clip accepts the GIB® Rondo® 308 batten. This is a high performing noise control system and can deliver STC ratings up to 62.

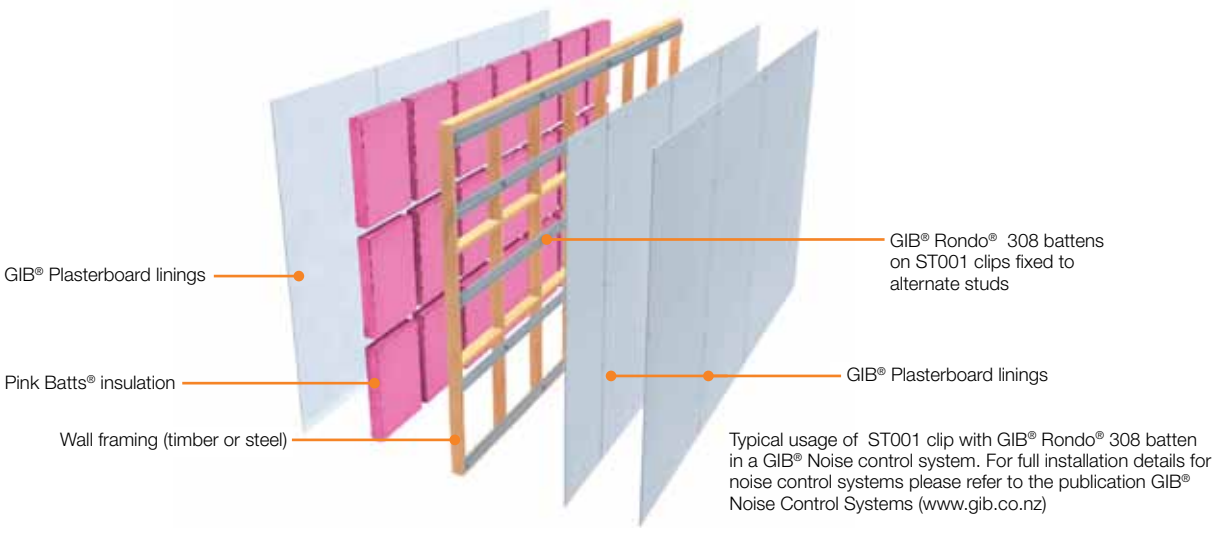

Typical usage of ST001 clip with GIB® Rondo® 308 batten in a GIB® Noise control system. For full installation details for noise control systems please refer to the publication GIB® Noise Control Systems (www.gib.co.nz)

SUSPENDED CEILING SYSTEMS

AUGUST 2012

Suspended ceiling layout and spans are subject to specific design. For further information please contact the GIB® Help line on 0800 100 442

The range of GIB® Rondo® suspended ceiling componentry provides additional clearance above the ceiling level. This could be to run electrical, plumbing or ventilation equipment. The system allows for the ceiling lining material to be directly attached to the lower face of the battens. This is not to be confused with a two way grid system which accommodates proprietary ceiling tiles.

The components can be assembled in a wide range of combinations to suit a variety of applications.

Curved ceilings can also be created by curving the Top Cross Rail (TCR) and attaching the batten to the TCR.

For details on curving componentry contact the GIB® Helpline on 0800 100 442.

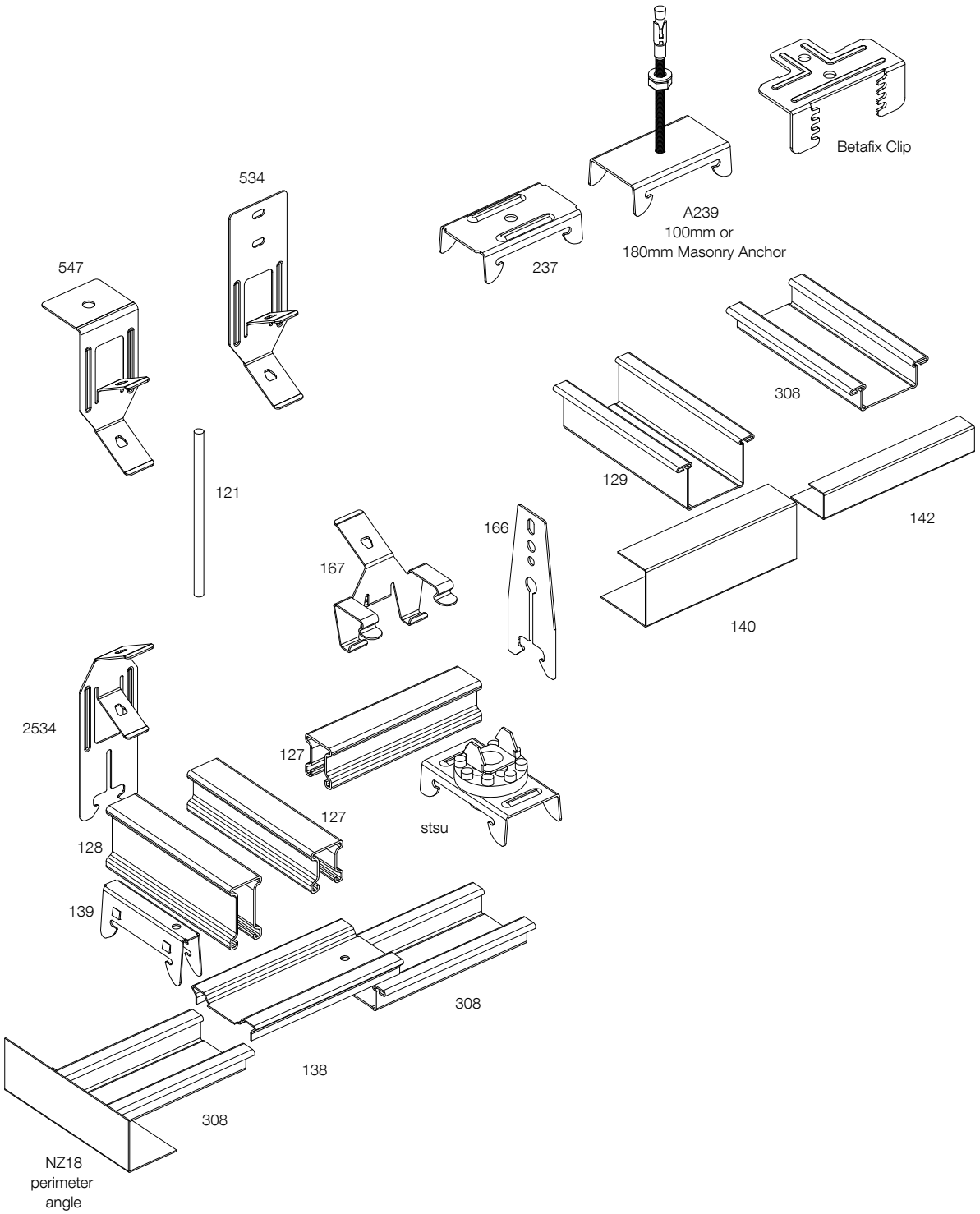

SUSPENDED CEILING SYSTEMS

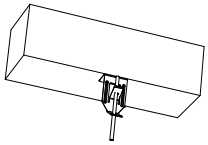

547 to Concrete

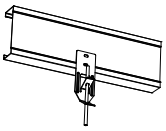

534 to Purlin

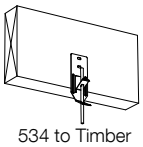

534 to Timber Truss

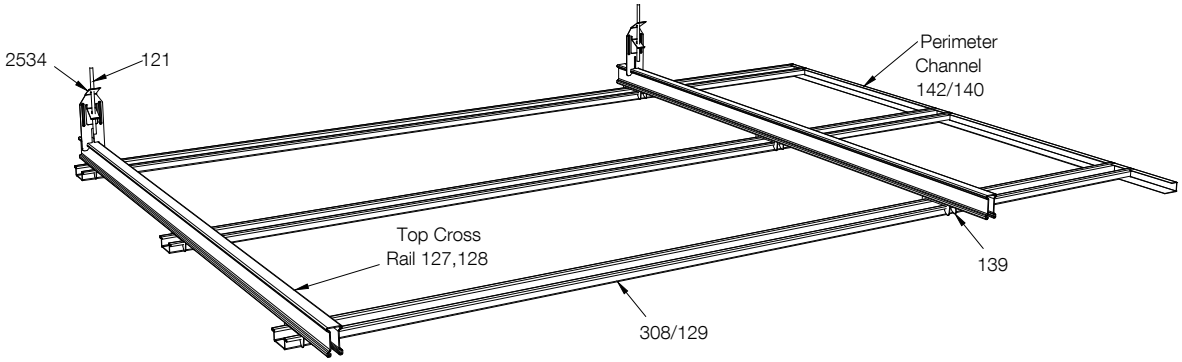

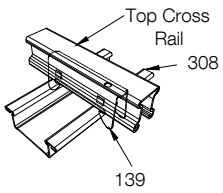

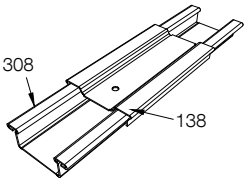

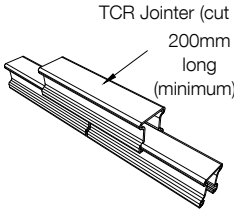

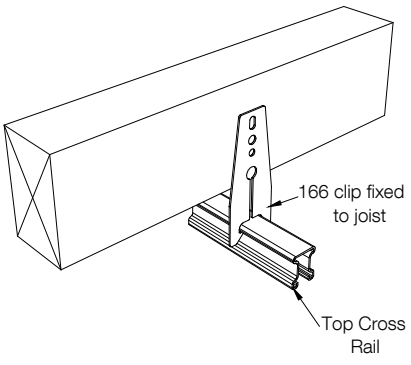

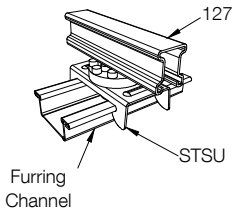

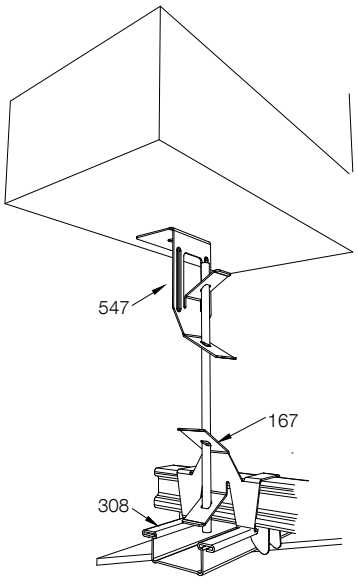

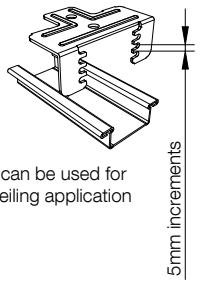

NOTES

AUGUST 2012

GIB Products
Manufactured by Winstone Wallboards Ltd. Distributed nationwide by authorised distributors.

Trademarks
The names GIB®, GIB Ultraline®, GIB Toughline®, GIB Noiseline®, GIB Braceline®, GIB Aqualine®, GIB Wideline®, GIB Fyreline®, GIB Soundseal®, GIB Cove®,
GIB Rail®, GIB Tradeset®, GIB Handibrac®, the colour mauve for GIB Toughline® and the colour blue for GIB Braceline®, GIB Living Solutions®, GIB Living®,
GIB Dry Zone®, GIB Tough Zone®, GIB Feature Zone®, GIB Fix®,
GIB Quiet Zone® and EzyBrace® are all trademarks of Fletcher Building Holdings Ltd

GIB Helpline - Call Free
0800 100 442

Free Facsimile
0800 229 222

Website
www.gib.co.nz

Auckland
P.O Box 12 256 Penrose. Telephone 09 - 633 0100
Facsimile 09 - 633 0101

Copyright © Winstone Wallboards Ltd, 2012

Printed in New Zealand using mineral-oil-free inks on environmentally responsible Media Satin using PEFC pulp from a mill that is EMAS accredited and ISO 14001 certified.



Winstone Wallboards Limited

37 Felix Street, PO Box 12256
Penrose, Auckland, New Zealand
Phone 64-9-633 0100, Facsimile 64-9-633 0101
Website: www.gib.co.nz
Email: info@gib.co.nz

GIB® Helpline: 0800 100 442
Facsimile: 0800 229 222

CBI 5113
SEPT 2018.
RRP $9.95 INCL GST

GIB®

Site Guide

For Residential and
Commercial Installations.



ABOUT WINSTONE WALLBOARDS

Winstone Wallboards Ltd, marketed under the GIB® brand, is New Zealand's largest manufacturer and marketer of gypsum plasterboard, drywall systems and associated products and services. Winstone Wallboards has manufactured plasterboard since 1927 and is committed to the advancement of the New Zealand building industry through ongoing technology development, industry skills training programmes, industry association sponsorship and a number of wider industry initiatives.

This guide provides you with the essential information needed when designing with, and installing, GIB® Systems.

GIB® Help Line – Call Free

0800 100 442

Free Facsimile

0800 229 222

Email

info@gib.co.nz

Website

gib.co.nz

The names GIB®, GIB Fyreline®, GIB Ultraline®, GIB Barrierline®, GIB Braceline®, GIB Toughline®, GIB Toughline®Aqua, GIB Noiseline®, GIB Aqualine®, GIB® Nail, GIB Tradeset®, GIB Plus 4®, GIB-Cove®, GIB Lite Blue®, GIB Tradefilla®, GIB Fix®, GIB RocTape®, GIB Wideline®, GIB Trade Finish®, GIB® RediFilla™, GIB TradeFilla®, the colour mauve for GIB Toughline®, the colour blue for GIB Braceline® / GIB Noiseline®, the colour pink for GIB Fyreline®, the colour green for GIB Aqualine®, and the shield device are registered trademarks of Fletcher Building Holdings Limited.

Copyright © Winstone Wallboards Ltd 2018

USE ONLY THE CURRENT SPECIFICATION

This publication may be superseded by a new publication. Winstone Wallboards Ltd accepts no liability for reliance upon publications that have been superseded.

Before using this publication check whether this is the current publication; simply call the GIB® Helpline on 0800 100 442 or visit gib.co.nz

GIB® Warranty Statement

WE ARE 100% BEHIND OUR PRODUCTS AND SYSTEMS

If any of our products or systems* fail to perform as claimed or an issue associated with any GIB® product or system does occur, Winstone Wallboards will work with the relevant parties to help resolve the issue.

SYSTEM AND PRODUCT COMPONENTS

A system is a group of related product components that interact to perform a task. Ensure the full GIB® building system, including the appropriate GIB® branded products, are specified and installed. This will ensure performance is not compromised and that any failure that is attributable to GIB® products and/or systems will be supported. **Winstone Wallboards will not support system performance where substitute products are used.**

BRANZ Appraised
Appraisal Nos. 427 [2007], 289 [2012], 940 [2016], 928 [2016], 394 [2017]

YOU'RE PROTECTED WITH GIB® PLASTERBOARD SYSTEMS**

Since 1927 building professionals have relied on GIB® plasterboard systems. Locally made for local conditions, they meet or exceed the New Zealand building code, are BRANZ appraised and are backed by full technical information and support to give complete confidence in using GIB® plasterboard systems*.Winstone Wallboards is committed through its heavy investment in quality management and technical support to ensure that GIB® products and systems perform as claimed. Comprehensive statements of 'fitness for purpose', functional performance and code compliance, including durability, are contained in GIB® literature and in the relevant BRANZ Appraisal.

PRODUCT AND SYSTEM WARRANTY**

The Winstone Wallboards warranty covers GIB® products and/or systems for a minimum of 10 years from the date of purchase. Winstone Wallboards warrants that GIB® products will be free from defects caused by factory workmanship or materials and, subject to compliance with the conditions in the Winstone Wallboards warranty statement, that the product or system will perform to the extent set out in relevant Winstone Wallboards published literature current at the time of installation. Nothing in this document shall exclude or modify any legal rights a customer may have under the Consumer Guarantees Act or otherwise which cannot be excluded or modified at law.

NZ BUILDING CODE CLAUSE B2 – DURABILITY

The Building Code sets the required durability standard for specific elements of building work. Clause B2 Durability aims to ensure that building elements and buildings are durable enough so all other objectives of the Building Code are satisfied throughout the life of the building, without the need for reconstruction or major renovation.

GIB® SYSTEMS DURABILITY

The following systems have, unless stated otherwise in the technical literature, a serviceability life in excess of that stated and satisfy the requirements of NZBC Clause B2 Durability.

15 Years

— GIB Aqualine® Wet Area Systems

50 Years

— GIB® Fire Rated Systems
— GIB EzyBrace® Systems
— GIB X-Block® Systems
— GIB Noise Control® Systems
— GIB® Intertenancy Barrier Systems

*When installed and maintained strictly in accordance with the relevant Winstone Wallboards literature current at the time of installation and under normal conditions of dry internal use.

**Visit gib.co.nz/warranty to view the full GIB® products and systems warranty including terms and conditions.

Site Guide: Table of Contents

1.0 INTRODUCTION 4

1.1 GIB® Systems Literature 4
1.2 GIB® Products and Systems 4
1.3 Substitution 4
1.4 Achieving the Desired Finish Quality 4
1.4.1 Levels of Finish 4
1.4.2 Levels of Finish Selection Chart 5
1.4.3 Levels of Finish Guidelines 6
1.4.4 Assessment Of The Surface Condition At Handover 7
1.4.5 Critical Lighting 8
1.4.6 Other Factors that Influence the Finished Surface 8
1.5 Health and Safety 9
1.6 Compliance 9
1.7 Limitations 9
1.8 Complaints Procedure 9

2.0 GIB® PRODUCT RANGE 10

2.1 GIB® System Brochures 10
2.2 GIB® Plasterboard Range 12
2.3 Board Substitution Options 14
2.4 GIB® Fasteners 15
2.5 GIB® Rondo® Metal Batten Ceiling System 16
2.6 GIB® Adhesives and Sealants 18
2.7 GIB-Cove® 18
2.8 GIB® Compounds 19
2.9 GIB® Paper Faced Trims 22

3.0 PRE – INSTALLATION 25

3.1 GIB® Deliver to Site Services 26
3.2 Pre – Installation Checklist 28
3.3 Site Conditions 29
3.4 Stacking, Storage and Handling 29
3.5 Protection from Weather 30
3.6 Ordering and Delivery 30
3.7 Timber Moisture Content 30
3.8 Waste Minimisation 30
3.9 Site Health and Safety 30
3.10 Required Tools 32

4.0 GENERAL WALL AND CEILING INSTALLATION 33

4.1 Before Starting Installation 33
4.2 General Installation Technique 34
4.3 GIB® Plasterboard Installation – Walls 38
4.3.1 Timber Frame – Horizontally Fixed 38
4.3.2 Timber Frame – Vertically Fixed 39
4.3.3 Steel Frame – Horizontally Fixed 40
4.3.4 Steel Frame – Vertically Fixed 41
4.3.5 Fastening to Metal Studs 42
4.3.6 Grooved Jambs and Architraves 43

4.4 Installation to Ceilings 44
4.4.1 General Installation 44
4.4.2 Standard Ceiling Fixing 45
4.4.3 Raking Ceilings and Skillion Roofs 46
4.4.4 Back Blocking – Butt and Edge Joints 47
4.4.5 Control Joints – Walls and Ceilings 48
4.4.6 GIB® Rondo® 310 Metal Batten System Installation Instructions 51
4.4.7 GIB® Rondo® 308 Metal Batten System Installation Instructions 53
4.4.8 GIB® Rondo® Suspended Ceiling System 55
4.5 Curving GIB® Plasterboard 56
4.6 Fixing to Masonry 57

5.0 GIB® PERFORMANCE SYSTEMS 59

5.1 GIB® Bracing Systems 59
5.1.1 Installation Summary 60
5.1.2 System Specifications 61
5.1.3 Bottom Plate Fixing 63
5.1.4 Panel Hold-Down Details 63
5.1.5 GIB EzyBrace® Corner Fastener Pattern 65
5.1.6 Permitted GIB EzyBrace® Plasterboard Substitutions 66
5.1.7 General Installation Details 66
5.1.8 Ceiling Diaphragms 68
5.2 GIB Aqualine® Wet Area Systems 70
5.2.1 Surface in Showers and Around Baths 71
5.2.2 Fixing Details for Non Tiled Walls 72
5.2.3 Fixing Details for Tiled Walls 72
5.2.4 Tiling, Flexible Sheet Vinyl and Rigid Sheet Shower Linings 73
5.2.5 Typical Construction Details 74
5.3 GIB® Fire, Noise and Other Performance Systems 77
5.3.1 GIB® Fire Rated Systems 77
5.3.2 GIB Noise Control® Systems 77

6.0 JOINTING AND FINISHING SYSTEMS 78

6.1 Jointing – Materials 78
6.2 Determining How Much You Need 79
6.3 Weather and Ventilation 80
6.4 Identifying Product Use By Dates 82
6.5 Stopping of Tapered or Recessed Edge Joints – Hand Tools 83
6.6 Jointing Techniques – Hand Tools 84
6.7 Stopping of End Joints / Butt Joints and Cut Edges – Hand Tools 86
6.8 Jointing Techniques – Mechanical Tools 87
6.9 Nail and Screw Stopping 90
6.10 External and Internal Corners 90
6.11 Negative Detail 92
6.12 GIB-Cove® 93
6.13 Skim Coating 94
6.14 Sanding 96
6:15 Joint Systems Recommendation 97
6.16 Painting 99
6.17 Plaster Rendering Interior Masonry or Concrete 99

7.0 REPAIRS AND MAINTENANCE 101

7.1 Plasterboard Repairs 101
7.2 Mounting Fixtures to GIB® Plasterboard 105

8.0 GIB® TROUBLESHOOTING 106

1.0 INTRODUCTION

The planning, building and finishing of a home or commercial building has a large number of important considerations. This guide provides you with the essential information needed when designing with, and/or installing, GIB® systems.

GIB® systems specifically designed for fire rating, noise control, bracing and wet areas are not fully documented in this guide. Please refer to the relevant sections in the specific technical publications.

1.1 GIB® SYSTEMS LITERATURE

Winstone Wallboards offers an extensive range of tested systems to ensure compliance with the requirements of the New Zealand Building Code.

Detailed information about these systems can be found in GIB® systems literature (see p. 10–11).

1.2 GIB® PRODUCTS AND SYSTEMS

GIB® systems incorporate different GIB® products, which are manufactured or supplied by Winstone Wallboards and are distributed nationwide by authorised dealers.

Winstone Wallboards has a range of GIB® branded jointing compounds, adhesives, fasteners and other drywall products. It is recommended that these GIB® branded products are used with GIB® plasterboard systems. They have been specifically developed or chosen by Winstone Wallboards for their compatibility with GIB® plasterboard systems.

Refer to the installation section for instructions on how to handle, store, install, fix and maintain GIB® products and systems. These instructions must be followed if GIB® systems are to achieve their claimed performance levels.

1.3 SUBSTITUTION

Winstone Wallboards accepts no liability if the systems are not installed in accordance with instructions contained in the GIB® technical literature. Substitution of specified or recommended components with alternative brands can compromise performance.

If alternative produts are substituted into GIB® Systems it is the responsibility of the user to ensure that the performance of the system is not compromised.

1.4 ACHIEVING THE DESIRED FINISH QUALITY

No matter how smooth wall and ceiling linings may appear, they will never be 100% physically flat. It is possible however to achieve the ‘appearance’ of blemish free flatness with the appropriate choice of a number of factors. For more detail refer to the ‘GIB® Interior Finishing’ literature. Download from gib.co.nz or call 0800 100 442 for a copy.

1.4.1 Levels of Finish

Having a clear understanding of the Levels of Finish is an important step in delivering an acceptable finished surface.

- Levels of Finish are a set of guidelines contained in AS/NZS 2589:2017 for specifying the required quality of finish prior to the application of decorative finishes such as paint
- No sheet lining material or substrate has a surface that is perfectly flat and totally free of minor imperfections
- It is important to be aware that Levels of Finish apply only to the finished plasterboard surface PRIOR to the application of any paint or decorative systems

Often there is a gap between the finish that a customer expects and the finish that can realistically be delivered. There are several factors that influence the final finished appearance. These include:

- Natural or artificial light from a critical angle
- Installation techniques and workmanship
- Stopping techniques and workmanship

Three Levels of Finish are defined in AS/NZS 2589:2017.

Level 3 — Level 3 must be used in areas that do not require decoration, such as above ceiling level or inside service shafts and the like.

All joints and interior angles must have tape embedded in joint compound and one separate coat of joint compound applied over all joints and fastener heads. All joint compounds must be finished smooth. (Generally this is achieved by scraping off nibs and ridges and the like, with the edge of a trowel.)

Level 4 — Level 4 shall be the default level of finish for gypsum linings unless specified otherwise.

Flat or low sheen paints must be used for this level.

All joints and interior angles must have tape embedded in jointing compound and a minimum of two separate coats of jointing compound applied over all joints, angles, fastener heads and accessories. All jointing compound must be finished evenly and be free of tool marks and ridges in preparation for decoration.

Note:

— Under critical lighting conditions surface imperfections may still be apparent in a Level 4 finish.

Level 5 — Level 5 is for use where gloss or semi-gloss paints are specified or where critical lighting conditions occur on flat or low sheen paints. Level 5 is characterised by a parity of texture and porosity. The surface texture must be random in fashion and monolithic, concealing joints and fixing points.

All joints and interior angles must have tape embedded in joint compound plus a minimum of two separate coats of joint compound applied over all joints, angles, fastener heads and accessories. All joint compound must be finished smooth and be free of tool marks and ridges.

A paint or plaster material shall then be sprayed, rolled or trowelled over the defined area in accordance with the manufacturers recommendations.

Note:

— Level 5 is difficult to achieve and always requires co-operation of the framer, plasterboard installer, plasterer and painter in establishing suitable work practices that deliver the agreed paint finish for the given project

— Some minor imperfections may still be visible in a Level 5 finish, however these will be minimised under the additional measures applied under Level 5

— The surface of the defined area may require sanding to be suitable for decoration

1.4.2 Levels of Finish Selection Chart

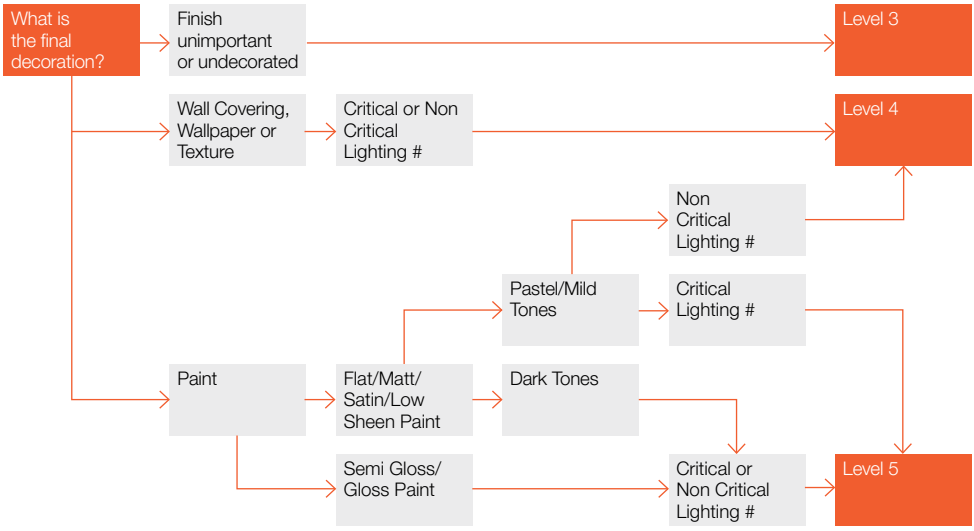

* May not be suitable for subsequent decoration to high levels of quality in the future. Refer to Level 4 or 5 for upgrading requirements.
# Critical lighting – when the light source is nearly parallel to the surface.
Non critical lighting – when the light striking the surface is diffused and / or at right angles

1.4.3 Levels of Finish Guidelines

For light timber framed construction as extracted from AS/NZS 2589:2017.

Note: It is important to recognise that the Level of Finish approach was developed to optimise installed plasterboard surfaces IN PREPARATION for decoration and NOT as a basis for establishing acceptance or rejection criteria for the final decorated surface.

	Levels of Finish Guidelines			
	Level 3	**Level 4**	**Level 5**	
Framing Requirements				
Maximum deviation from a 1800mm straight edge along or across adjacent framing members	90% of measured points must be less than 4mm 10% may be no more than 5mm		90% – less than 3mm 10% no more than 4mm	Preline
Timber moisture content at the time of lining	18% or less. NZS 3602 recommends lower moisture content (8% - 18%) if heat pumps, air conditioning or central heating are to be installed			Preline
Installation Requirements				
Wall Joints	Sheets must be set out to minimise joints, usually requiring wall sheets to be horizontally fixed			Plasterboard Fixer
Joints round openings	Vertical joints must not coincide with the vertical edge of doors or windows. If a joint needs to be made in this area it must be made above the opening, no closer than 200mm to the edge of the opening			Plasterboard Fixer
Control Joints	Control Joints must be positioned at maximum 12.0m centres in either direction. See p. 48			Plasterboard Fixer
Sheet and butt joints in ceilings	These must be made centrally between ceiling battens and back blocked. Butt joints should be staggered by at least 600mm			Plasterboard Fixer
Sheet end butt joints in walls	Can be made on framing or back blocked between studs		All joints must be back blocked	Plasterboard Fixer
Tapered edge joints in ceilings	Back blocking not required but is still highly recommended	Must be back blocked in areas with 3 or more sheet edge joints on timber battens (6 if metal battens have been used) Not required in ceiling suspension systems. See p. 47	All joints must be back blocked	Plasterboard Fixer
Finishing Requirements				
Joints	All joints must have GIB® jointing tape embedded in joint compound PLUS 1 additional coat of joint compound applied over all joints, angles, accessories and fastener heads	All joints must have GIB® jointing tape embedded in joint compound PLUS 2 additional coats of joint compound applied over all joints, angles, accessories and fastener heads.		Stopper
Additional requirements			A skim coat must be applied to remove differential surface porosity	Stopper
*Tapered edge joint total width (incl. formed tapers in backblocked sheets).	170mm min.	250mm min.		Stopper
*Butt joint widths (flat joints)	340mm min.	500mm min.		Stopper
*Joint build-up	Maximum of 2mm build up across entire width as an even curve, without a distinct peak or ridge. Joint should not be hollow.			Stopper
*Joint surface (incl. internal and external corners	No gouges, scratches, voids, pock marks or tool marks. Joint edges should be smooth and feathered without any scuffed paper. Edges should be an even straight line.			Stopper
*External angles	Must be plumb and straight. Minimum joint width 250mm. 3mm max build up at the metal angle over an even, gentle taper. Joint should not be hollow.			Stopper
*Internal angles	Must be plumb and straight. Minimum joint width 100mm. 2mm max build up at the corner, over an even, gentle taper. Joint should not be hollow.			Stopper

This chart is intended as a guide only to critical elements relating to Levels of Finish.
Full details of the requirements can be found in AS/NZS 2589:2017
*These minimum requirements have been extracted from AS/NZS 2589:2017

1.4.4 Assessment Of The Surface Condition At Handover

A satisfactory finish for plasterboard linings is dependent on a number of critical factors including the straightness of the underlying substrate to which they are attached. Careful management of localised build-up of joint compound on the surface of plasterboard linings during the finishing process of jointing, internal and external angles and fastener points is also required.

This clause shall be used to assess the finish of joints, angles and fastener points in plasterboard wall or ceiling linings, or both.

Visual satisfaction of the final job can be impacted by the quality of finished decoration. A sign-off form should be used at handover to assist in agreement between the parties on the quality of finish to avoid concerns being levelled at the finish of the plasterboard lining when it may relate to inadequate decoration.

Note: High intensity lighting is commonly used to provide light for work areas or application purposes but is not deemed suitable for performing a subjective visual inspection of interior surfaces. Inspection should be undertaken under normal lighting conditions (in the absence of critical lighting) and from normal viewing positions. See diagram below.

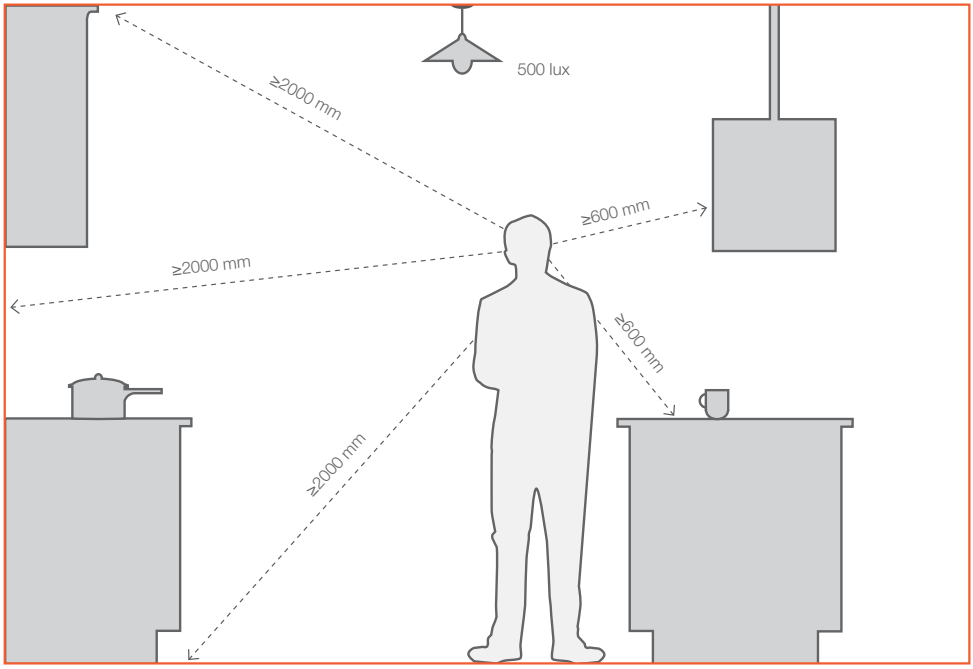

Normal viewing positions vary depending on the type of surface being inspected.

Taken from MBIE Guide to tolerances, materials and workmanship in new residential construction 2015.

1.4.5 Critical Lighting

When light from sources such as windows, skylights and artificial wall or ceiling washer lights strike a surface at a shallow angle surface, irregularities tend to be exaggerated. This is termed "critical lighting". When the angle of light is more or less at right angles to a surface, imperfections are less obvious – this is termed "non-critical lighting".

Minimising Critical Lighting

- Horizontal Fixing – fix GIB® plasterboard sheets horizontally instead of vertically on walls. GIB® plasterboard fixed horizontally allows glancing light from adjacent windows to shine along the joint reducing the "shadowing" effect that can be more noticeable with vertical fixed. Refer to Figures 1 and 2
- Sheet layout is often determined by the system being installed. Ensure that the sheet layout complies with the installation requirements of the particular system.
- Recessed downlights and light shades – incorporating recessed downlights or light shades help to channel light downwards. Refer to Figures 3, 4 and 5
- Spot Lights – avoid spot lighting or wall mounted up-lighting or be careful about where these lights are directed and the angle at which they hit a surface particularly near jointing
- Window Positioning and Shades – avoid positioning narrow windows hard up against the end of a wall or ceiling, particularly on long walls or ceilings at the end of a room or hallway. Making a window wider and placing it away from the room corner should reduce the critical lighting effect. Avoid taking windows right up to the ceiling level. Provide sunshades over the window or recess the window to stop the sunlight reaching the wall. Refer to Figure 6

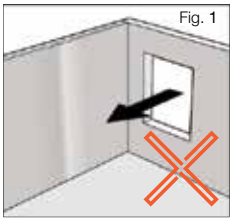
Fig. 1

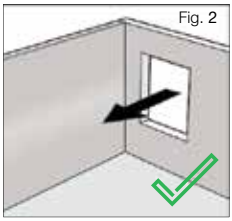
Fig. 2

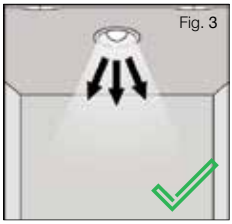
Fig. 3

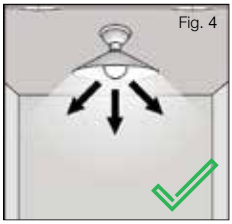
Fig. 4

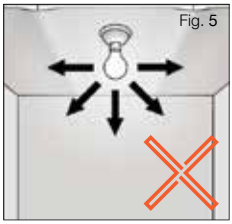
Fig. 5

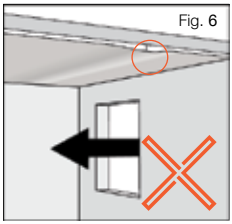
Fig. 6

1.4.6 Other Factors that Influence the Finished Surface

- Heavily textured or patterned finishes tend to hide imperfections
- Smooth, monolithic painted surfaces tend to highlight imperfections
- Matt finishes will aid in disguising imperfections. Conversely, high gloss paint will accentuate imperfections
- Variations in surface, such as negative details, will remove the focus from imperfections
- The method of paint application has an effect. Paint applied by roller will aid in disguising imperfections. Paint applied by spray can accentuate imperfections
- Lighter colours are less likely to show imperfections and are more effective at diffusing light and reducing shadowing, particularly in smaller rooms

1.5 HEALTH AND SAFETY

Under normal conditions of use, GIB® plasterboard presents no known health hazard.

Construction sites can contain multiple hazards. It is important that appropriate health and safety requirements are strictly followed in such environments.

For further information on safety, handling and installing GIB® products and systems refer to the installation section.

1.6 COMPLIANCE

Under normal conditions of dry internal use GIB® plasterboard systems have a service life complying with the durability requirements of NZBC B2 Durability.

The systems and product testing referred to in this guide have been carried out and/or appraised by BRANZ and various other independent testing organisations.

1.7 LIMITATIONS

GIB® plasterboard (paper faced):

- Must not be installed externally or exposed to weather elements for long periods of time without being covered or protected *(refer to exceptions below)
- Must not be handled or installed while in a very damp or wet state
- Must not be placed or installed directly into surface water
- Must not be exposed to chlorine rich environments or areas where relative humidity is greater than 90% RH for long periods of time like; group showers, steam rooms or indoor heated swimming pools
- Must not be exposed to temperatures greater than 52°C for long periods of time as this may cause calcination of the core. Carefully consider the heat output from fittings like: halogen lights, cooking elements, fire places and flues etc. Consult the fitting manufacturer for specifications
- Must not support ceiling loads that exceed 3kg/m^2 including; light fittings, ceiling fixtures and insulation etc
- Can develop mould growth if left wet or damp for extended periods of time and exposed to airborne or surface contaminants. The plasterboard must be replaced if it has not been able to dry within approx. 48 hour period after becoming wet, or the water source has been contaminated

Electric Radiant Ceiling Heating (ERCH)

- ERCH systems may give rise to abnormal localised or overall temperature conditions in ceiling spaces which could affect the timber framing and GIB® plasterboard linings
- Excessive thermal or hygrometric movement induced by these systems may result in some, or combinations, of the following defects; deterioration of the gypsum in the GIB® plasterboard core (possibly affecting structural and fire resistant rating performance), fastener ‘popping’, joint peaking or joint cracking
- Prior to construction, we suggest you contact your designer to fully consider these factors in order to optimise surface finish quality
- Winstone Wallboards will not accept liability for surface finish quality problems where ERCH systems are installed in conjunction with any GIB® lining system

*Exceptions - the following range of plasterboard can be installed externally and exposed for the maximum times shown. The plasterboard must be installed in a dry state:

- 25mm GIB Barrierline® 12 weeks maximum
- 16mm GIB Fyreline® (when used in the GIB Barrierline® system) 4 weeks maximum

1.8 COMPLAINTS PROCEDURE

Should a problem be encountered with any GIB® product during installation or delivery, immediately contact the GIB® Helpline on 0800 100 442. Do not continue to use the product that is not performing to specification or expectation. Keep samples of the product in question and where possible, document batch numbers and/or manufacturing dates.

2.0 GIB® PRODUCT RANGE

Because of the volume of information it is not feasible to include all the GIB® systems publications in the GIB® Site Guide.

If you are installing any of the following GIB® Systems it is important that you obtain a copy of the relevant publication.

These can be accessed by:
- Downloading from gib.co.nz
- Download the GIB® App available from the App or Google Play Stores
- Contacting the GIB® Helpline on 0800 100 442
- Or from most GIB® stockists

2.1 GIB® SYSTEM BROCHURES



GIB EzyBrace® Systems

The GIB EzyBrace® Systems literature provides a guide to wall bracing of buildings constructed in accordance with NZS 3604:2011.



GIB Noise Control® Systems

GIB Noise Control® Systems provide the detail necessary to specify and install elements that will deliver noise control solutions for intertenancy and sub intertenancy requirements.



GIB Aqualine® Wet Area Systems

GIB Aqualine® with its water resistant core containing special polymers helps protect against damage to linings caused by moisture ingress.

The GIB Aqualine® Wet Area Systems literature provides full specification and installation details.



GIB® Fire Systems

GIB® Fire Rated Systems literature has been compiled to make it easy to specify passive fire protection systems that will form part of a complete fire design.



GIB® Tough Systems

GIB® Tough Systems provides information on reducing the effects of impact damage to walls.



GIB® Reverberation Control Systems

GIB® Reverbration Control Systems specifically address spaces with hard reflective surfaces, by absorbing sound.

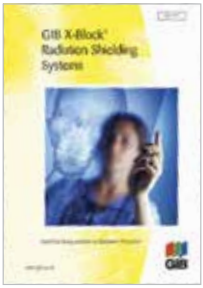

GIB X-Block® Radiation Shielding Systems

GIB X-Block® is a specialist plasterboard and jointing system to provide protection from X-ray radiation in medical facilities, dental clinics and veterinary practices.



GIB® Rondo® Systems

GIB® Rondo® Metal Batten Systems are a simple way to ensure that you get a straight and true ceiling every time.



GIB® Intertenancy Barrier Systems

Intended for multi-unit residential homes designed within the scope of NZS3604:2011, the GIB® Intertenancy Barrier System for Terrace Homes provides peace of mind, delivering fire, noise and security performance.

2.2 GIB® PLASTERBOARD RANGE

TE/TE – Both edges tapered. TE/SE – 1 tapered, 1 square edge.

Shaded box indicates availability

GIB® Standard

GIB® Standard is an economical lining material available in 10mm and 13mm thicknesses.

GIB Wideline® – 1350mm wide GIB® Standard is ideal for horizontal fixing for wall heights above 2.4m



	Thickness (mm)	Sheet Width (mm)	2400	2700	3000	3300	3600	4200	4800	6000	Max. kg/m²
TE/TE	10	1200	■	■	■	■	■	■	■	■	7.0
TE/TE	13	1200	■	■	■	■	■	■	■	■	9.0
TE/SE	10	1200	■		■		■	■	■	■	7.0
GIB Wideline® TE/SE	10	1350					■		■	■	7.0
GIB Wideline® TE/SE	13	1350							■		9.0
GIB® Patch Board	10	1200 x 590									7.0

GIB Braceline® / GIB Noiseline®

GIB Braceline® / GIB Noiseline® is a dual purpose board that provides high level bracing performance when used in GIB® Bracing Systems and helps reduce noise transmission through walls and ceilings. Refer to GIB Noise Control® Systems literature for noise control installation requirements.



	Thickness (mm)	Sheet Width (mm)	2400	2700	3000	3300	3600	4200	4800	6000	Max. kg/m²
TE/TE	10	1200	■	■	■		■		■		9.3
TE/TE	13	1200	■	■	■		■				12.5
TE/SE	10	1200							■		9.3
TE/SE	10	1350							■		9.3

GIB Aqualine®

GIB Aqualine® has a water resistant core to help prevent moisture penetration. Refer to the installation section or GIB Aqualine® Wet Area Systems literature for installation requirements.



	Thickness (mm)	Sheet Width (mm)	2400	2700	3000	3300	3600	4200	4800	6000	Max. kg/m²
TE/TE	10	1200	■	■	■		■				8.0
TE/TE	13	1200	■	■	■		■				11.0
TE/SE	10	1200							■		8.0
TE/SE	10	1350					■				8.0

GIB Ultraline®

GIB Ultraline® features a modified core for enhanced density and rigidity. Its Pearlcoat coated paper provides an enhanced surface appearance for high visibility areas.



	Thickness (mm)	Sheet Width (mm)	2400	2700	3000	3300	3600	4200	4800	6000	Max. kg/m²
TE/TE	10	1200					■		■	■	7.5
TE/TE	13	1200			■		■		■	■	9.1

GIB Fyreline®

GIB Fyreline® has a high density modified core which resists exposure to fire longer than standard plasterboard. Refer to GIB® Fire Rated Systems literature for installation requirements.



	Thickness (mm)	Sheet Width (mm)	2400	2700	3000	3300	3600	4200	4800	6000	Max. kg/m²
TE/TE	10	1200	■	■	■		■				7.0
TE/TE	13	1200	■	■	■	■	■				11.0
TE/TE	16	1200	■	■	■						15.3
TE/TE	19	1200	■		■						16.9

GIB Toughline®

GIB Toughline® is a high density, fibreglass mesh embedded plasterboard for added resistance to impact damage. Refer to GIB® Tough Systems literature for installation requirements.

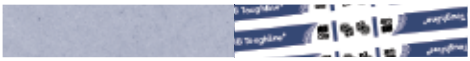

	Thickness (mm)	Sheet Width (mm)	2400	2700	3000	3300	3600	4200	4800	6000	Max. kg/m²
TE/TE	13	1200	■	■	■		■				11.7

GIB Toughline® Aqua

GIB Toughline® Aqua is a multi-performance plasterboard with multiple attributes including noise attenuation, impact, water, fire and bracing resistance. See the appropriate system literature for installation requirements.



	Thickness (mm)	Sheet Width (mm)	2400	2700	3000	3300	3600	4200	4800	6000	Max. kg/m²
TE/TE	13	1200	■	■	■						11.4

GIB Barrierline®

GIB Barrierline® plasterboard is a key component in the GIB® Intertenancy Barrier system. Refer to GIB® Intertenancy Barrier or GIB® Noise Control Systems literature for installation requirements.

	Thickness (mm)	Sheet Width (mm)	2400	2700	3000	3300	3600	4200	4800	6000	Max. kg/m²
SE/SE	25	600			■						20.2

GIB X-Block®

GIB X-Block® plasterboard provides protection from X-ray radiation. Refer to GIB X-Block® Systems literature for installation requirements.

	Thickness (mm)	Sheet Width (mm)	2400	2700	3000	3300	3600	4200	4800	6000	Max. kg/m²
TE/TE	13	1200	■		■						18.3

GIB Quietline®

GIB Quietline® plasterboard is perforated producing unique patterns to absorb and reflect sound. Refer to GIB® Reverberation Control Systems literature for installation requirements.

	Thickness (mm)	Sheet Width (mm)	2400	2700	3000	3300	3600	4200	4800	6000	Max. kg/m²
TE/TE	13	1200	■								8.3

GIB® Plasterboard Sheet Coverage

Sheet width	1200	1200	1200	1200	1200	1200	1200	1200	1350	1350	1350
Sheet length	2400	2700	3000	3300	3600	4200	4800	6000	3600	4800	6000
Sheet area m²	2.88	3.24	3.60	3.96	4.32	5.04	5.76	7.20	4.86	6.48	8.10

2.3 BOARD SUBSTITUTION OPTIONS

With the wide range of plasterboard types there are occasionally some overlaps in functionality.

For situations not covered below contact the GIB® Helpline on 0800 100 442.

10mm Substitution Options

10mm GIB® Standard can be replaced with:	10mm GIB Braceline® / GIB Noiseline® 10mm GIB Fyreline® 10mm GIB Ultraline® 10mm GIB Aqualine®
10mm GIB Fyreline® can be replaced with:	10mm GIB Braceline® / GIB Noiseline® 10mm GIB Ultraline® 10mm GIB Aqualine® 13mm GIB® Standard
10mm GIB Braceline® / GIB Noiseline® can be replaced with:	10mm GIB Aqualine® (see Note 1 below) 13mm or thicker GIB Fyreline® (see Notes 1 & 2 below)

13mm Substitution Options

13mm GIB® Standard can be replaced with:	13mm GIB Braceline® / GIB Noiseline® 13mm GIB Fyreline® 13mm GIB Ultraline® 13mm GIB Aqualine® 13mm GIB Toughline® 13mm GIB Toughline® Aqua
13mm GIB Fyreline® can be replaced with:	13mm GIB Braceline® / GIB Noiseline® 13mm GIB Aqualine® 13mm GIB Toughline® 13mm GIB Toughline® Aqua (See Note 2 below)
13mm GIB Braceline® / GIB Noiseline® can be replaced with:	13mm GIB Aqualine® (see Notes 1 & 3 below) 13mm or thicker GIB Fyreline® (see Notes 1, 2 & 3 below) 13mm GIB Toughline® (see Note 3 below) 13mm GIB Toughline® Aqua (see Note 3 below)

Note 1: The bracing element must be 900mm or greater in length. Fasteners to be at 100mm centres to the perimeter of the bracing element. Corner bracing fastener pattern applies. Hold downs required.

Note 2: Fastener type and length must be as specified for the relevant fire rated system.

Note 3: The bracing performance will be met but the noise control rating will be reduced.

2.4 GIB® FASTENERS

GIB® Grabber® Screws	Size	Quantities		
Plasterboard to Timber – High Thread				
Loose	25mm x 6g	200	1000	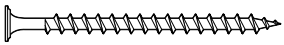
	32mm x 6g	200	1000	
	41mm x 6g	200	1000	
	51mm x 7g	100		
	57mm x 7g	100		
Collated	25mm x 6g	1000		
	32mm x 6g	1000		
	41mm x 6g	1000		
	51mm x 7g	800		
Plasterboard to Steel – Fine Thread, Self Tapping				
Loose	25mm x 6g	200	1000	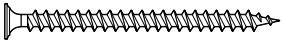
	32mm x 6g	200	1000	
	41mm x 6g	200	1000	
	51mm x 7g	100		
	63mm x 8g	100		
	76mm x 8g	100		
Collated	25mm x 6g	1000		
	32mm x 6g	1000		
	41mm x 6g	1000		
Plasterboard to Timber/Steel GIB® Grabber® Dual Thread				
Collated	32mm x 7g	1000		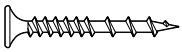
Metal to Timber – Wafer Head, Self Tapping				
Loose	32mm x 8g	200	1000	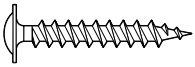
Metal to Metal – Pancake Head, Drill Tip				
Loose	13mm x 8g	500		

GIB® Fastenings coverage	
Screws	Approx. 800 per 100m² plasterboard

2.5 GIB® RONDO® METAL BATTEN CEILING SYSTEM

GIB® Rondo® Metal Batten Systems* provide a flat, stable ceiling substrate.

The long clips 313 and 394 will provide approx. 100mm additional drop below ceiling framing.

Vertically aligned components are compatible.

GIB® RONDO® 310	308 SYSTEM	129 SYSTEM
310 Batten 3.6m 4.8m 6.0m 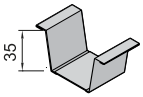	**308 Batten** 3.6m 4.8m 6.0m 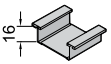	**129 Batten** 3.6m 4.8m 6.0m 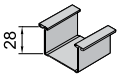
311D Clip 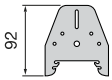	**226 Clip** 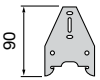	
313 Long Clip 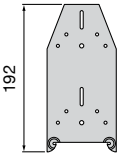	**394 Long Clip** 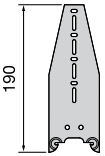	
A311 GIB Quiet Clip® 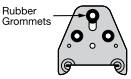	**STWC Acoustic Clip (ST001)** Resilient mount Direct fix to wall or ceiling Accepts 129 or 308 batten 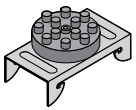	
312 Jointer 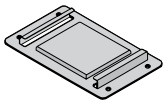	**138 Jointer** 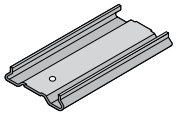	
340 Perimeter Channel 3.0m 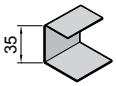	**142 Perimeter Channel** 3.0m 	**140 Perimeter Channel** 3.0m 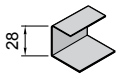
NZ18 Perimeter Angle 3.0m Can also be used for internal corners in tiled shower situations 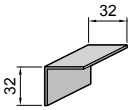	**GIBFix® Angle** 2.4m 2.7m 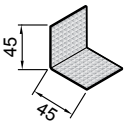	

*Note: GIB® Rondo® components are referred to elsewhere throughout this publication by product numbers rather than including the full GIB® Rondo® name e.g. GIB® Rondo® 310 Batten referred to as 310 batten.

SUSPENDED CEILING ACCESSORIES

547 Clip
Fix vertically.
5mm galv. rod (121) is fitted by squeezing the two lugs of the 547 clip. Easily adjustable for height

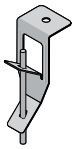

534 Clip
5mm galv. rod (121) is fitted by squeezing the two lugs of the 534 clip. Easily adjustable for height

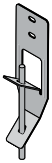

121 Rod
3.6m
5mm galv. rod



2534 Clip
Friction fitted to 121 rod
Connects to TCR



127 TCR
3.6m
4.8m
128 TCR
14923 4.8m
Top Cross Rail (TCR) Also called a strongback. Clips to 2534 clip

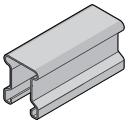

139 Clip
Clicks into TCR at spacings to suit the ceiling lining, ie. 450mm for 10mm plasterboard and 600mm for 13mm plasterboard
Connects to 308 or 129 batten



A239 Clip - clip with 100mm Rod
A239 Clip - clip with 180mm Rod
237 Clip - 100 or 180mm bolt length (incl 30mm anchor)
For direct fixing to concrete walls or ceilings.
Accepts 129 or 308 Batten 239 excl bolt, 237 excl bolt and threaded hole

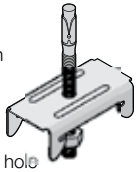

BETAFIX Clip
For direct fixing to concrete walls or ceilings. Approx 25mm adjustment for height in 5mm increments
Accepts 129 or 308 Batten



166 Clip
Direct horizontal fixing to timber or steel framing
Accepts 127 or 128 TCR



STSU Clip
Ceiling resilient mount
Fits into 127 or 128 TCR.
Accepts ether 129 or 308 battens

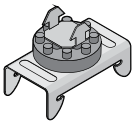

167 Clip
Side mount clip - low profile alternative for 2534 clip
Connects 127 TCR to 5mm rod
Provides height adjustment

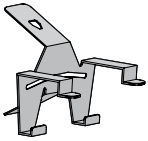

MISCELLANEOUS COMPONENTRY

BMCL Clip
Provides plasterboard fixing to structural steel framing in conjunction with 140 Perimeter channel

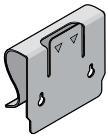

GIB RAIL®
3.0m
Fix directly to studs as per GIB® Noise control systems literature

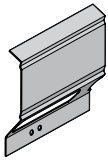

*Note: GIB® Rondo® components are referred to elsewhere throughout this publication by product numbers rather than including the full GIB® Rondo® name e.g. GIB® Rondo® 310 Batten referred to as 310 batten.

2.6 GIB® ADHESIVES AND SEALANTS

GIBFix® All-Bond

Solvent based adhesive suitable for most surfaces except polystyrene (Minimum application temperature is 5°C).



375ml Cartridge
600ml Sausage

GIBFix One®

Acrylic based adhesive with an ultra low VOC content. Compatible with timber/steel framing (Minimum application temperature is 10°C).



375ml Cartridge
600ml Sausage
4 litre Pail

GIB Soundseal®

Water based, highly flexible acoustic sealant for use in GIB Noise Control® Systems. Paintable



375ml Cartridge
600ml Sausage

GIB® Gapfiller

Multipurpose acrylic gapfiller with an ultra low VOC content. Paintable



300ml Cartridge

GIB® Adhesive Coverage	
375ml cartridge	17m² plasterboard
600ml sausage	28m² plasterboard
4 litre pail	170m² plasterboard

GIB Soundseal® Coverage		
Bead Size	**375ml Cartridge**	**600ml Sausage**
10mm x 10mm	3.75 lineal metres	6.0 lineal metres
10mm x 5mm	7.5 lineal metres	12.0 lineal metres

2.7 GIB-COVE®

All profiles available in 3.6m lengths.

Mezzo

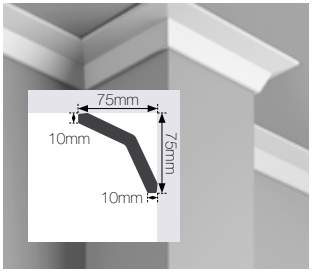

Tenor

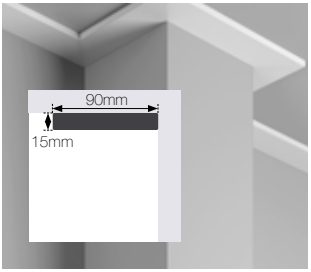

Basso

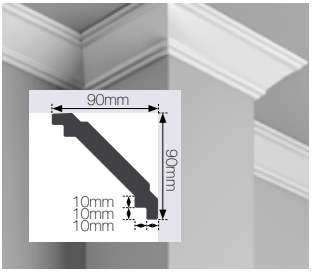

Alto

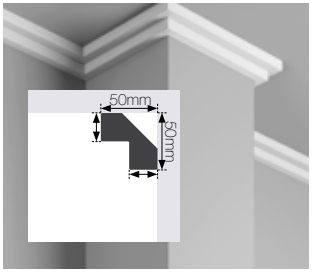

Classic 90mm, 75mm and 55mm

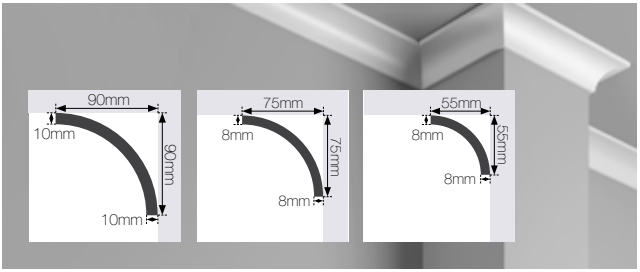

2.8 GIB® COMPOUNDS

There are numerous options for compounds. These fall into two general categories, setting compounds and air drying compounds.

Air Drying Compounds

- Ready to use materials (except GIB® U-Mix)
- Easy to sand producing a smooth finish
- Harden as they dry. Drying can be slow if applied thick and in poor drying conditions

Setting Compounds

- Harden and set by chemical reaction with water
- Supplied in powder form and mixed with clean water to the correct consistency
- The working time is controlled during manufacture so that compound sets and goes hard after a specified time
- Must not be mixed with other compounds
- Must not be applied over air drying materials

Setting Compounds

GIB Tradeset®



- Ideal for bedding tape
- Machine tool compatible
- Variety of working times available

		Base Coat	✓
		Second Coat	✓
		Finishing Coat	✗
		Suitable for GIB-Cove®	✗
Product Size	5kg, 20kg Bag	Compound Type	Setting
Working/Set Times (mins)	20, 45, 90 & 150*	Scraping	Easy

GIB MaxSet®



- Mechanically strong
- Strong tape adhesion
- Sets hard for faster jointing
- Maximum coverage with low shrinkage

		Base Coat	✓
		Second Coat	✓
		Finishing Coat	✗
		Suitable for GIB-Cove®	✗
Product Size	20kg Bag	Compound Type	Setting
Working/Set Times (mins)	90	Scraping	Only while ‘green’

GIB Lite Blue®



- Easy to sand
- Machine and hand tool application
- Low shrinkage

		Base Coat	✗
		Second Coat	✓
		Finishing Coat	✗
		Suitable for GIB-Cove®	✗
Product Size	17.5kg Bag	Compound Type	Setting
Working/Set Times (mins)	90	Sanding	Easy

*GIB Tradeset® 150 is only available in 20kg bags

Air Drying Compounds

GIB Trade Finish® Heavy Weight



- Heavy weight, suitable for machine sanding
- Cool weather application
- Super slick to trowel or apply with box
- Full body trowelling
- Ideal for filling or covering uneven surfaces

		Base Coat	✕
		Second Coat	✕
		Finishing Coat	✓
		Suitable for GIB-Cove®	✕
Product Size	15L Pail	Compound Type	Air Drying Ready Mix
Working/Set Times (mins)	-	Sanding	Hard

GIB Trade Finish® Multi



- Medium weight multi purpose
- Super slick to trowel or apply with box
- Yellow tint enables easy identification

		Base Coat	✓
		Second Coat	✓
		Finishing Coat	✓
		Suitable for GIB-Cove®	✕
Product Size	10L, 15L Pail & 14L Carton	Compound Type	Air Drying Ready Mix
Working/Set Times (mins)	-	Sanding	Modertate

GIB Trade Finish® Lite



- Easy sanding light weight compound
- Super slick to trowel or apply with box
- Yellow tint enables easy top coat identification

		Base Coat	✓
		Second Coat	✓
		Finishing Coat	✓
		Suitable for GIB-Cove®	✕
Product Size	15L Pail & 14L Carton	Compound Type	Air Drying Ready Mix
Working/Set Times (mins)	-	Sanding	Easy

GIB Trade Finish® Extra Lite



- Very easy sanding light weight compound
- Super slick to trowel or apply with box
- Yellow tint enables easy top coat identification
- Warm weather application

		Base Coat	✓
		Second Coat	✓
		Finishing Coat	✓
		Suitable for GIB-Cove®	✕
Product Size	15L Pail & 14L Carton	Compound Type	Air Drying Ready Mix
Working/Set Times (mins)	-	Sanding	Very Easy

GIB® U-Mix



- Economical finishing compound
- Mix and adjust viscosity as required on site
- Good open time
- Machine tool compatible

		Base Coat	✕
		Second Coat	✕
		Finishing Coat	✓
		Suitable for GIB-Cove®	✕
Product Size	20kg Bag	Compound Type	Air Drying Ready Mix
Working/Set Times (mins)	-	Sanding	Easy

GIB Plus 4®



- Suitable for all three jointing coats
- Ideal for skim coating
- Excellent adhesion to a variety of substrates

		Base Coat	✓
		Second Coat	✓
		Finishing Coat	✓
		Suitable for GIB-Cove®	✕
Product Size	4L, 10L & 15L Pails	Compound Type	Air Drying Ready Mix
Working/Set Times (mins)	-	Sanding	Easy

Note: For guidance on approximate drying times for air drying compounds refer to p. 82.

Repair Compounds

GIB® RediFilla™



- Repair scratches, dents, nail heads and cracks
- Sandable, paintable, low shrinkage,good adhesion
- Ready to use

		Base Coat	✓
		Second Coat	✓
		Finishing Coat	✓
		Suitable for GIB-Cove®	✗
Product Size	2L & 4L Pails	Compound Type	Air Drying Ready Mix
Working/Set Times (mins)	-	Sanding	Easy

GIB® TradeFilla™



- Quickly repair and fill holes
- Paintable and doesn't need a finishing coat
- Can apply second coat after 30 minutes if required

		Base Coat	✓
		Second Coat	✓
		Finishing Coat	✓
		Suitable for GIB-Cove®	✗
Product Size	5kg Bag	Compound Type	Setting
Working/Set Times (mins)	10	Sanding & Scraping	Moderate

Cove Bond

GIB-Cove® Bond



- Excellent "wet tack"
- Required for back blocking
- Two setting times available

		Base Coat	✗
		Second Coat	✗
		Finishing Coat	✗
		Suitable for GIB-Cove®	✓
Product Size	5kg* & 20kg Bags	Compound Type	Setting
Working/Set Times (mins)	45 & 90	Scraping	Hard

Victor® Cornice Bond



- Specifically designed for adhering fibrous plaster products

		Base Coat	✗
		Second Coat	✗
		Finishing Coat	✗
		Suitable for GIB-Cove® / Fibrous Mouldings	✓
Product Size	20kg Bag	Compound Type	Setting
Working/Set Times (mins)	30	Scraping	Hard

Specialty Compounds

Victor® Multi Plus



- For solid plaster screeding/rendering over a masonry surface
- Long work time and gradual controlled set
- Use as a finish coat or as general purpose undercoat

		Base Coat	✓
		Second Coat	✓
		Finishing Coat	✓
		Suitable for GIB-Cove®	✗
Product Size	20kg Bag	Compound Type	Setting
Working/Set Times (mins)	90	Sanding	Polished / Not Sanded

GIB X-Block® Jointing Compound



- Eliminates the need for backing joints with lead strip
- High strength joint when used in conjunction with paper joint tape
- Can be finished with any of the GIB® finishing compounds

		Base Coat	✓
		Second Coat	✗
		Finishing Coat	✗
		Suitable for GIB-Cove®	✗
Product Size	25kg Bag	Compound Type	Setting
Working/Set Times (mins)	90	Sanding	Polished / Not Sanded

2.9 GIB® PAPER FACED TRIMS

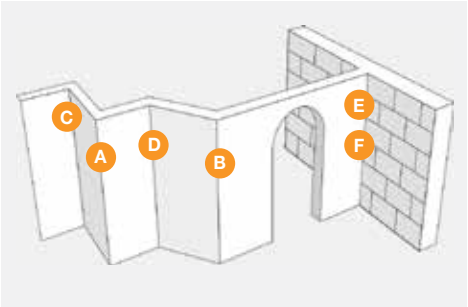

GIB® Goldline® Platinum Trims are made with a patented, high quality paper laminated to galvanised steel forms. The metal provides maximum strength and protection for the corner, while the paper face matches the plasterboard paper surface to help create a more uniform surface finish.

Ext 90° GIB® Goldline® Corner Trim G1-W

2.4m
2.7m
3.0m

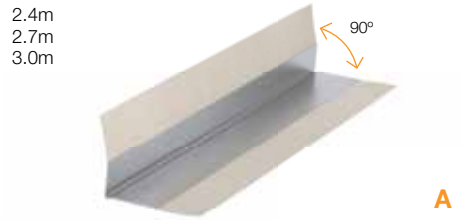

GIB® Goldline® Bullnose Ext 90° Corner Trim G1-B

2.4m
3.0m

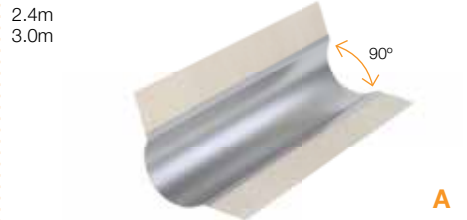

Ext 135° GIB® Goldline® Corner Trim G1-0

2.4m

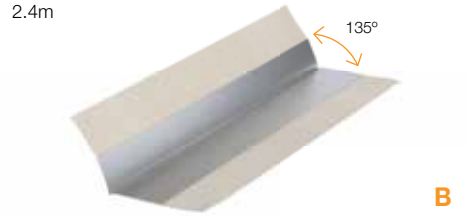

Int 90° GIB® Goldline® Corner Trim G2 Standard

2.4m
2.7m
3.0m

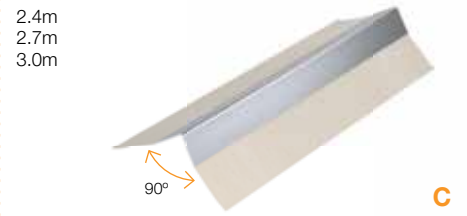

Int 135° GIB® Goldline® Corner Trim G2-0

2.4m

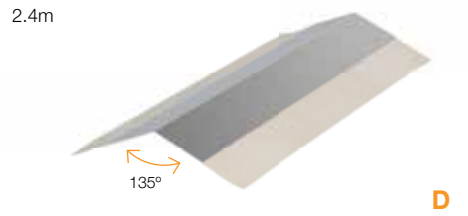

GIB® Goldline® Reveal GR

for 10mm GIB® plasterboard 3.0m
for 13mm GIB® plasterboard 3.0m

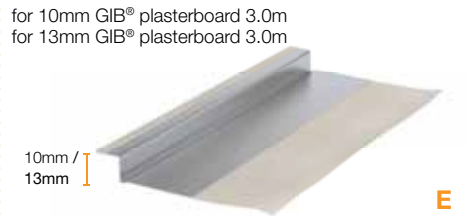

GIB® Goldline® L-Trim G4

for 10mm GIB® plasterboard 3.0m
for 13mm GIB® plasterboard 3.0m



GIB® Goldline® L-Trim / GR Reveal as Control Joint



2.10 GIB® METAL TRIMS

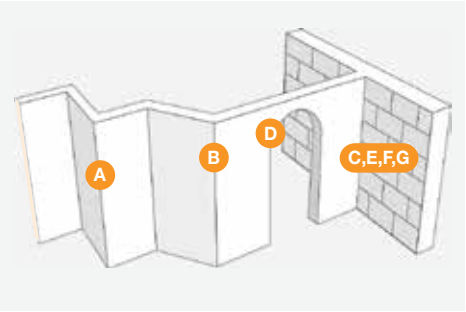

GIB® Metal Trims provide a clean defined edge on either straight or curved details. The perforated legs provide a strong key for compounds and the sharply defined nib provides a knock resistant corner.

Ext 90º GIB® Slim Angle P01

External 90 degree perforated corner trim

2.4m
2.7m
3.0m

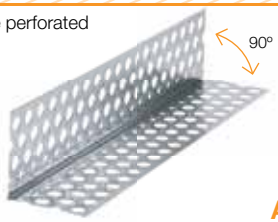

A

Ext 135º GIB® Slim Angle P01A

External 135 degree perforated corner trim

2.4m
2.7m
3.0m

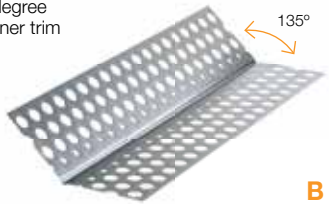

B

Rondo® Stopping Angles P25/26/27

L-Trim for stopped end trim

P25–10mm–3.0m
P26–13mm–3.0m
P27–16mm–3.0m



C

GIB® Slim Arch Bead P10

Perforated curvable corner edge trim

2.4m
3.0m



D

Rondo® Stopping Beads P12/13

End cap bead – stopped

P12–10mm–2.4m
3.0m
P13–13mm–2.4m
3.0m



E

Rondo® Shadowline Stopping Bead P50

Reveal or Z-trim

P50–10mm–3.0m



F

Rondo® Casing Bead P05/7

End cap bead – unstopped

P05–10mm–2.4m
P07–13mm–3.0m

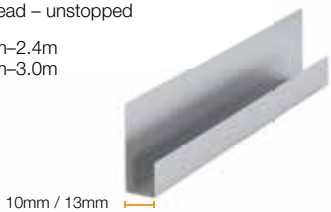

G

Rondo® Control Joint P35

P35 Control Joint – White

3.0m



2.11 GIB® ADDITIONAL COMPONENTS

GIB® Paper Joint Tape

A critical element to reinforce joints. Spark perforated to aid drying and adhesion. Buffed underside to aid bonding with compound

75m roll, 52mm wide

150m roll, 52mm wide



GIB RocTape®

Similar to GIB® Paper Joint Tape and can be installed using hand tools or mechanical tools. Suitable for flat joints only

75m roll, 50mm wide



GIB® UltraFlex® No Coat

High Impact Flexible Composite Trim suitable for all off angles interior or exterior

325"–30m roll, 82mm wide

450"–30m roll, 112mm wide



GIB® Levelline™ Trim

A foldable composite trim with a paper face to match the paper face of GIB® plasterboard for a more uniform finish on corners

30m roll, 70mm wide



GIB® Plastic W-Profile Control Joint

3.0m



GIB HandiBrac®

Required in specific bracing elements

Sold in pairs complete with Tek screws and screw-bolt. Must be installed as per GIB EzyBrace® Systems literature



3.0 PRE – INSTALLATION

Before installation of GIB® products or systems there are some points that need to be considered. In order that products and systems perform as stated, it is important for designers and installers to be familiar with these points.

Achieving a satisfactory finished wall or ceiling surface is the result of teamwork involving several trades and disciplines.

It is the responsibility of each contractor to carry out their part of the process in a manner that allows following trades to do their part effectively.

There is no place in the industry for the phrase "The stopper will fix it".

All trades involved in the process have to take full responsibility for the quality of their workmanship.

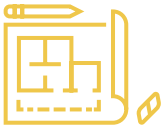

Designers

- Convert the client's brief into working drawings
- Comply with Building Code requirements and ensure that all relevant standards are applied
- Determine final decoration
- Determine lighting design to achieve functional requirements and optimised quality of finish
- Determine the level of finish required
- Determine the location of control joints
- Provide sufficient detail on the drawings for trades people to interpret accurately



Builders

- Provide project management and supervision to ensure that the site is ready for each incoming trade
- Co-ordinate the sub-trades
- Site management to provide suitable dry storage for plasterboard products



Carpenters

- Ensure framing is erected plumb, straight, level and flat
- Ensure that ceiling battens are all running in the same direction within rooms
- Provide an acceptable substrate for the plasterboard installer



Plasterboard Installers

- Check the substrate prior to installing plasterboard
- Ensure that remedial work is carried out before any plasterboard is installed
- Check with builder that the pre-lining inspection has taken place and the timber moisture content does not exceed 18%
- Install plasterboard to manufacturer's instructions
- Provide an acceptable substrate for the plasterboard stopper



Stoppers

- Check the substrate prior to commencing finishing work
- Ensure that remedial work is carried out before finishing
- Carry out stopping work in accordance with manufacturer's instructions and the requirements of AS/NZS 2589:2017
- Provide an acceptable substrate for the painter



Painters

- Check the substrate prior to painting.
- Ensure that remedial work is carried out before any painting commences
- Apply paint according to the manufacturer's instructions and to best trade practice

3.1 DELIVERED TO SITE SERVICES

At Winstone Wallboards we are always striving to ensure that every site delivery is as smooth, safe and efficient as possible. Make sure your site is ready for your delivery – first time.

Note: GIB® Delivered to Site (DTS) services not available to all areas.

What is a 'Plasterboard Ready' site?

A plasterboard ready site is one that has clear and unobstructed access. Hazards (e.g. building waste, scaffolding) need to be removed before the plasterboard is delivered to site.

The floor area where the plasterboard is to be stored must be clean, clear, dry and free of obstacles. This means the roof is installed and the building is weatherproof, i.e. closed in.

What if the site is not plasterboard ready?

Will result in delivery delays and redelivery charges (i.e. If risk is too high, delivery of plasterboard will not go ahead).

Increases the potential risk of injury and product damage.

Extra delivery charges

DTS prices include the costs for a Standard Delivery. Your delivery may incur extra changes for a Specialist Delivery if one or more of the following apply:

- Plasterboard is to be carried more than 20 metres
- Multi-storey pass up
- Plasterboard split into more than two areas.
- Foundations higher than 400mm
- Use of long (23m) or extra long reach hiab (32m)
- Bulk plasterboard delivery to commercial sites.
- Plasterboard to be carried from door/window where hiab has dropped to another location
- Narrow driveway, height + weight restriction
- Unstable ground (mud, loose dirt) prevents truck/hiab from getting within 20 metres of nearest point of cover
- Driver has to be on site for more than 2 hours
- Poor weather conditions prevent the safe delivery of the plasterboard (eg. heavy rain)

Do you need a site check?
A site check requires 2 full working days' notice prior to delivery date. Order must be received by Winstone Wallboards before site check can be organised. The site check will be booked in within 48 hours of delivery.

If in doubt, book a free site check so we can let you know if your site is Plasterboard Ready, and advise on the most efficient delivery service for you.

You must book a site check for:
- Commercial sites
- Orders over 10 tonne (i.e. approximately two standard house lots or 1250m^2)
- Hill (steep) sites

How you can help

Make sure the site is plasterboard ready.

Ensure the site contact is contactable by phone at least 1 hour before delivery (e.g. for a 7am delivery, site contact will need to be able to take a call from 6am).

Provide all required information when placing your order so we can despatch the correct delivery vehicle, including:

- Site address
- Site contact and number
- Site access description (e.g. from truck to building, type of building – single or multi-level)
- Delivery requirements
- Specific safety equipment for the site (if applicable)

If in doubt, request a free site inspection to avoid potential delivery delays and extra re-delivery charges.

For more information on getting your site plasterboard ready, contact your local GIB® representative or call the GIB® Helpline on 0800 100 442.

Is your site 'Plasterboard Ready'? Check the examples below.









3.2 PRE – INSTALLATION CHECKLIST

Using a checklist can help with inter-trade co-operation.

Site Address

Builder	
Fixer	
Stopper	
Painter	

Fixer

Before any fixing commences...	Y/N	Checked by	Date
Has the framing surface been checked for flatness? i.e. no protruding nogs, lintels etc.?			
Is the moisture content acceptable i.e. 18% or less			
Are grooved jambs set up correctly to allow 1–1.5mm clearance for sheet edge?			
Are all ceiling battens running in same direction within room spaces?			
Are there any factors that could affect the fixing of the board? Please note here:			
Substrate accepted by fixer			

Name	Signed		Date

Stopper

Before any stopping commences...	Y/N	Checked by	Date
Have the number and length of joints been kept to a minimum?			
Has the lineal meterage of joints been kept to a minimum?			
Has the board been fixed horizontally wherever practical?			
Correct fasteners used?			
Fastenings (nails or screws) have not been overdriven?			
No joints above or below the edges of windows or doors?			
No fastenings to sheet centres on walls? (Not applicable to Fire Rated systems or tiled surfaces)			
Butt joints in ceiling back blocked where required?			
Correct size and spacing of glue daubs? (If viewed during installation)			
Only GIB® tape used on stopping joints			
Are there any factors that could affect the stopping of the board? Please note here:			
Substrate accepted by stopper			

Name	Signed	Date

Painter

Before any painting commences...	Y/N	Checked by	Date
Surface free of visible trowel marks or defects			
Are there any factors that could affect the painting of the board? Please note here:			
Substrate accepted by fixer			

Name	Signed	Date

3.3 SITE CONDITIONS

It is important to consider the impact of damp and cold site conditions during the construction process on the finish quality once the building has been occupied and reaches equilibrium.

Maintain a minimum temperature (interior) of 10˚C during the plasterboard fixing process and a controlled temperature of above 10˚C for 24 hours before, during and after the joint stopping process. With concrete slab construction, provide sufficient ventilation to minimise the build-up of internal humidity (which increase the risk of sagging of plasterboard as well as delaying the project due to prolonged drying/curing of joint compounds).

Failure to observe these requirements may result in framing and plasterboard surface defects.

3.4 STACKING, STORAGE AND HANDLING

GIB® plasterboard is a finishing product and needs to be handled as such. For safety reasons, plasterboard sheets should be stacked horizontally wherever possible, taking the following considerations into account:

- To avoid sheet distortion or damage, sheets must be neatly stacked on a clean surface not susceptible to moisture
- Sheets stacked flat on a concrete floor must be separated from the floor surface by a moisture barrier (e.g. polythene sheet) or placed on bearers (min. 75 x 50)
- Consider floor loadings as GIB® plasterboard weighs in the range of 700–800kg/m^3
- Stacks should be limited to 300mm high on suspended floors to minimise the risk of structural damage through point loading

Due to the complexity of a construction site and the restricted site conditions, it is not always possible to horizontally stack plasterboard on a flat surface. Plasterboard can be stored vertically as a last option, taking the following considerations into account:

- For safety reasons and to prevent sheets from falling, vertical supports/restraints must always be used when plasterboard is vertically stacked
- The maximum number of 10mm and 13mm sheets that can be vertically stacked is 20 against timber framing. This reduces to 13 sheets maximum for 16mm and 19mm GIB Fyreline®
- To reduce the risk of toppling, the first sheet must be placed 150–180mm from the bottom plate
- Winstone Wallboards does not recommend stacking sheets vertically on the short edge

When handling plasterboard sheets, lift sheets from the stack rather than dragging them. This also reduces the risk of face paper damage. Carry sheets on edge. This is easier than carrying them on the flat and sheets are less likely to crack or break.

Horizontal Storage

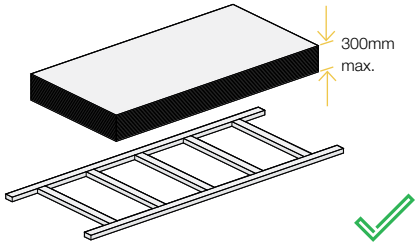

Vertical Storage

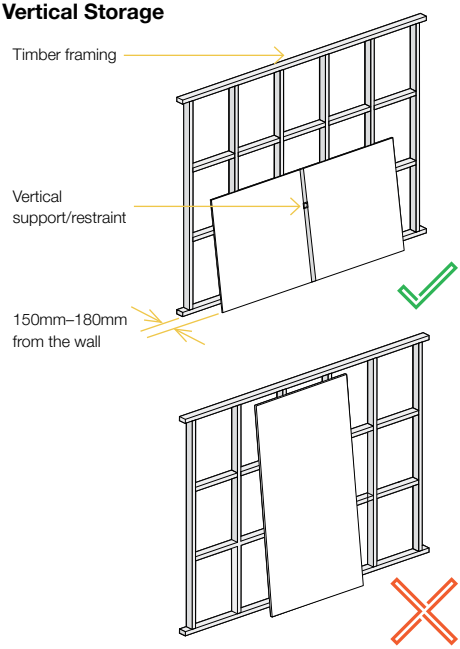

3.5 PROTECTION FROM WEATHER

Do not install GIB® plasterboard in any situation where external claddings are not in place or which is not totally protected from the elements. If plasterboard is installed under such conditions it greatly increases the risk of surface defects such as cracked or peaked joints and fastener pops.

GIB® products must be kept dry preferably by being stored inside a building and under cover. Where it is necessary to store GIB® plasterboard outside, it must be stacked off the ground and be fully protected from the weather.

3.6 ORDERING AND DELIVERY

At the time of ordering, consider specifying which sheet sizes are designated for walls and those for ceilings so that they can be placed in separate stacks.

With the extensive GIB® product range it is impossible for building merchants to stock all types and sizes of product. Winstone Wallboards has a strong customer service promise to back up our merchant customers. Planning ahead will mean you can get the exact products you require.

Deliver GIB® plasterboard to site immediately prior to installation to reduce the risk of damage.

3.7 TIMBER MOISTURE CONTENT

The moisture content of timber at the time of fixing plasterboard must be 18% or less.

Fixing plasterboard to timber with moisture content exceeding 18% will increase the risk of surface defects such as peaked or cracked joints and popped fasteners.

Winstone Wallboards strongly recommends builders invest in the use of moisture meters to check timber framing is suitable for plasterboard linings prior to installation.

Winstone Wallboards recommends a lower moisture content (8% to 18%) if air conditioning, heat pumps or central heating are to be installed.

The objective should be to install linings to timber framing with a moisture content as close as possible to the final equilibrium level of the complete and occupied building.

Winstone Wallboards recommends:

- The use of GIB® Rondo® Metal Ceiling Battens
- The use of Kiln Dried Machine Stress Graded (KDMG) timber for all wall, roof and mid-floor framing members

Note: Mixing KDMG framing with non KD timber can cause undue substrate movement and is not recommended.

3.8 WASTE MINIMISATION

Ever increasing pressure is being placed on waste disposal facilities. As the construction industry is a major contributor of waste material, consideration should be given to methods of waste minimisation.

The use of longer sheets and horizontal fixing helps reduce on-site waste.

GIB® plasterboard off cuts, if separated from other waste building materials, can be readily recycled. For larger projects the waste can be diverted to compost manufacturers who grind up the GIB® plasterboard and utilise it in compost.

3.9 SITE HEALTH AND SAFETY

Construction sites can contain multiple hazards. It is important that appropriate health and safety requirements are strictly followed at all times.

Before commencing any installation work, familiarise yourself with the safety requirements of the site you are working on.

Identify any potential hazards, applying the steps in the table to the right.

Under normal conditions of use, GIB® plasterboard presents no known health hazards.

1. **Eliminate the Hazard -** Eliminate the hazard altogether if at all possible
2. **Isolate the Hazard -** Install barriers or guard rails to isolate people from the hazard
3. **Minimise the Risk of Harm -** For example, use fall restraints or provide soft landing systems to minimise the risk of harm

Lifting Machines

Plasterboard lifting machines are recommended for ceiling sheets. These can generally be hired from a local hire centre. If a plasterboard lifter is not available, ensure that adequate labour is on hand to assist.



Lifting Techniques

Careful lifting techniques must be employed to minimise the risk of back injury.



Knives

Knives used for scoring and snapping need to be sharp to operate effectively. Extreme care needs to be taking when using any cutting implements.



Dust Masks

Dust masks complying with AS/NZS 1715 and 1716 must be worn for all sanding of stopping compounds. For more information visit business.govt.nz/worksafe.



Waste Materials

Do not dispose of waste materials or compounds into any drainage system. Most local authorities will accept gypsum waste materials in landfills. If in doubt, check with your local authority.



Vertical Restraints

For safety reasons, flat stacking of sheets is recommended wherever possible (see page 29). Plasterboard can be stored vertically as a last option and should always be restrained to prevent sheets from falling. No more than 20 sheets should be vertically stacked at any one point against a timber frame. This reduces to 13 sheets for 16mm and 19mm GIB Fyreline®. To reduce the risk of toppling, the first sheet must be placed 150–180mm from the bottom plate.



Scaffolding

Ensure that scaffolding complies with relevant safety requirements.



Safety Tags

All electrical equipment and leads must have a current and appropriate safety tag.



3.10 REQUIRED TOOLS

Plasterboard installation requires a range of general carpentry tools

Hammer



Measuring Tape



Folding Rule



Plasterboard Knife



Hand Rasp – Surform



T Square



Straight Edge



Nail Punch



Keyhole Saw



Plasterboard Saw



Flat Lifting Bar



Drywall Screwdriver



Adhesive Gun



Tip: If using a cordless drill with clutch for fixing, take some time to adjust the clutch so that the screws do not cut through the surface of the paper.

Practise on some off-cuts and timber or in an area that will be out of normal view. Remember that old timber will be much harder than newly installed timber, so be careful when working in areas with both.

4.0 GENERAL WALL AND CEILING INSTALLATION

This section covers the installation of GIB® plasterboard in walls and ceilings. Installation guidance is also provided for speciality systems; GIB EzyBrace® and GIB Aqualine® Wet Area Systems.

For further installation guidance including system specifications for GIB Toughline®, GIB Noiseline®, GIB Fyreline® and GIB Barrierline® refer to the appropriate system literature.

4.1 BEFORE STARTING INSTALLATION

Inspect the framing

Check that the surface is flat and that there is nothing that could affect the finished surface. For example:



Nogs not flush.

Nails not below the framing surface.



Do not simply rely on the building inspector at the pre-line inspection but take responsibility and understand the effects of framing moisture on content and the quality of finish.

Moisture content to be 18% or less.



Nail plates or hold down ties not checked in flush with the surface insulation bulging out between studs.



These are all factors that will affect the quality of the finished surface. **The time to correct them is now.** Once fixing commences it indicates an acceptance of the substrate quality.

It is the responsibility of the framing contractor to provide a substrate that allows the plasterboard fixer to effectively install the plasterboard in accordance with the manufacturer's instructions.

Likewise it is the responsibility of the plasterboard fixer to provide a suitable surface for the plasterboard stopper to effectively carry out the stopping process.

There is no place in the industry for the phrase "The stopper will fix it".

All trades involved in the process have to take full responsibility for the quality of their workmanship.

4.2 GENERAL INSTALLATION TECHNIQUE

Cutting GIB® Plasterboard

Measure the wall to determine the required sheet size. Generally cut the sheet 2mm–3mm less than the exact dimension needed.



Position the sheet with the face paper side up. Mark the sheet as required.



Firmly hold the straight edge on the line to be cut.

Cut through the face paper and into the plaster core by sliding the knife blade against the straight edge.



Break the sheet core by snapping the sheet back firmly while holding on to the sheet edge.



Turn the sheet over so that back paper is now facing up. Score the back paper to complete the cut.



4.2 GENERAL INSTALLATION TECHNIQUE

Cutting GIB® Plasterboard

For sheets requiring multiple cuts, use a handsaw to complete the short cuts before scoring and snapping the longer cut.







Mark the position of any power outlets or pipes on the face of the board.

Make hole at a corner of the marked outlet. Cut out the box as marked.



Tip: To get the saw started, drill holes at each of the corners but within the opening. In some cases the saw can simply be pushed through the sheet without the need for holes.

4.2 GENERAL INSTALLATION TECHNIQUE

Fixing GIB® Plasterboard

Apply GIBFix® adhesive at specified centres. Apply immediately prior to fixing the GIB® plasterboard. Do not allow time for the adhesive to "skin" over.

GIBFix® adhesive daubs should be approximately 35mm in diameter and about 12mm high.

Cold temperatures (10ºC or less) will affect the curing time of adhesive. It is recommended that steps are taken to achieve 10ºC at the time of installation.



Tip: Do not place GIBFix® adhesive behind fasteners. This will increase the risk of "fastener popping" Place at least 200mm from fasteners

Fit the GIB® plasterboard in position against the framing. Press the sheet firmly against the framing to ensure a good bond with the adhesive.



Sheets must be 5–10mm from the floor. Place packers to suit OR use a flat bar to lift the sheet off the floor.

(Note that some specific fire rated systems require that the sheets are fixed hard to the floor).



Install fasteners at specified centres. Make sure that the head of the fastener is bedded just below the surface of the board.



Tip: Use an electric drywall screwgun equipped with an adjustable depth control head and Philips bit. If a screw is overdriven and the paper and/or core of the GIB® plasterboard is damaged, insert a second screw approximately 50mm from the first and then remove the first screw.

How much GIBFix® adhesive to use?

A simple method of reducing GIBFix® waste and having consistently sized daubs of adhesive is to remove the sealer cap from a sipper type drink bottle top and fit it to the nozzle of an adhesive cartridge. Press the face of the cap against the surface and apply pressure to the adhesive applicator gun. The cap will fill with adhesive and when full, pull the cap away from the surface. This will leave a daub of adhesive approximately 35mm in diameter and with a raised "peak" of about 10–12mm.

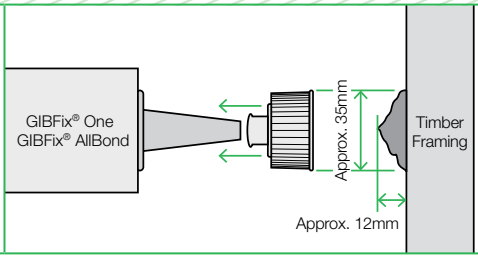

4.2 GENERAL INSTALLATION TECHNIQUE

Joint Placement

Give careful consideration to the placement of sheet joints in walls and ceilings.

Try to minimise sheet joints by using the largest sheet size available.

Where possible place joints in situations where they are less likely to affected by critical lighting.

Vertical Fixing

Form sheet edge joints in vertically fixed walls on studs.

Shorter vertical joints (400mm or less) such as above a window or door can be made off the stud. Joints under windows can be made off the stud provided that nogs are installed to reduce the unsupported joint to 600mm or less. Alternatively the joint may be back blocked.

Horizontal Fixing

Sheet edge joints in horizontally fixed walls may be unsupported (stud centres must not exceed 600mm).

For levels of finish 3 and 4, sheet end butt joints may be made on studs. However, to reduce the risk of joint defects, it is strongly recommended that sheet end butt joints are back blocked off framing.

Around Door or Window Openings

Sheet edge joints formed at the edge of door and window openings are highly prone to cracking. To reduce the risk of cracking it is strongly recommended that sheets are cut around openings and joints are formed no closer than 200mm to the edge of the opening.

General Installation – Not recommended

Prone to cracking due to frame flexibility. Not recommended for general installations.

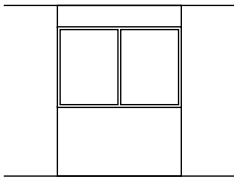

General Installation – Not recommended

Time consuming for no real benefit. Still highly prone to cracking.

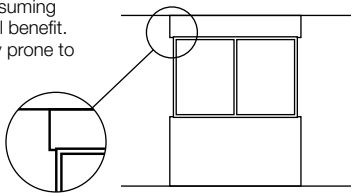

General Installation – Acceptable

This moves the joint away from problem area. Floating joint, correctly taped and stopped is less likely to crack.

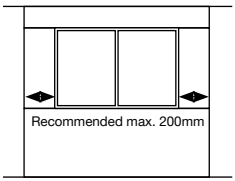

General Installation – Acceptable

Positioning the joint 200mm from the window edge will reduce the likelihood of cracking.

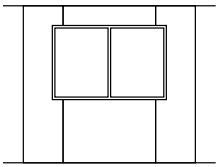

General Installation – Recommended

If the grooved jambs have been accurately installed, this is not difficult for a competent fixer. The lining on this wall will need to be fixed prior to any adjacent walls.

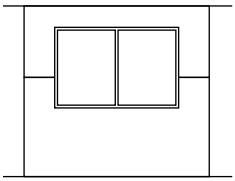

High Movement Applications

For applications prone to a high degree of movement, such as transportable homes, consideration should be given to installing a control joint at the edges of the door or window (see p. 49)

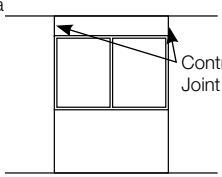

4.3 GIB® PLASTERBOARD INSTALLATION – WALLS

For installation guidance on GIB EzyBrace® and GIB Aqualine® Wet Area Systems refer to the GIB® Performance Systems section.

For all other GIB® Performance Systems refer to the relevant GIB® Systems literature.

4.3.1 Timber Frame – Horizontally Fixed

Wall Framing

- Framing dimensions, spacings and nog requirements must comply with NZS3604:2011
- Timber moisture content must not exceed 18% (see p. 30)
- Nogs to be evenly spaced with a maximum spacing of 1350mm. If staggering nogs off a centreline (Option A) it is recommended a maximum offset of 50mm–75mm
- Nogs are not required behind the horizontal joint except in shower situations and specific fire, noise or impact prone area, such as stairwells or doorways

Fasteners

- 10mm GIB® plasterboard, minimum 25mm x 6g GIB® Grabber® high thread screws*
- 13mm GIB® plasterboard, minimum 32mm x 6g GIB® Grabber® high thread screws*

Installation

- 300mm to top and bottom plates and perimeter studs
- Pairs of single fasteners to each stud where horizontal joint crosses
- Place fasteners no closer than 12mm from paper bound sheet edge or 18mm from any cut edge
- Fasteners at wall corners to be placed 50mm in from the corner in each direction
- Do not place GIBFix® adhesive at sheet edges or within 200mm of fasteners
- Place daubs of GIBFix® adhesive at 300mm centres to intermediate studs
- Sheet edges at door or window openings can be adhesive fixed unless forming part of the perimeter of a bracing element

Stopping

- Refer to the Jointing and Finishing section (p. 78)

*Some GIB® Performance Systems may require different fastener lengths and types. Refer to the applicable GIB® System literature for more information.

Timber Frame – Horizontally Fixed

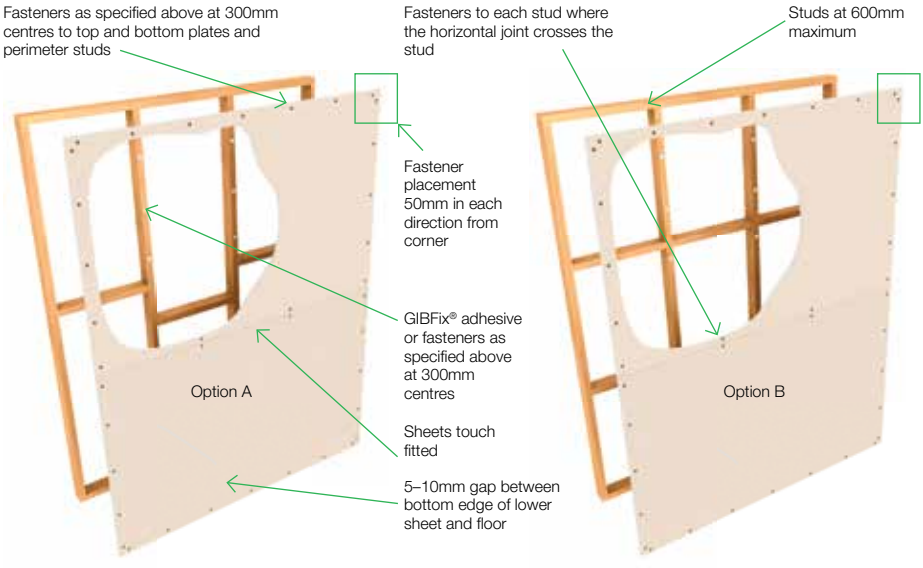

4.3 GIB® PLASTERBOARD INSTALLATION – WALLS

For installation guidance on GIB EzyBrace® and GIB Aqualine® Wet Area Systems refer to the GIB® Performance Systems section.

For all other GIB® Performance Systems refer to the relevant GIB® systems literature.

4.3.2 Timber Frame – Vertically Fixed

Wall Framing

— Framing dimensions, spacings and nog requirements must comply with NZS3604:2011
— Timber moisture content must not exceed 18% (see p. 30)

Fasteners

— 10mm GIB® plasterboard, minimum 25mm x 6g GIB® Grabber® high thread screws*
— 13mm GIB® plasterboard, minimum 32mm x 6g GIB® Grabber® high thread screws*

Installation

— 300mm centres around sheet perimeter
— Place fasteners no closer than 12mm from paper bound sheet edge or 18mm from any cut edge
— Fasteners at wall corners to be placed 50mm in from the corner in each direction
— Do not place GIBFix® adhesive at sheet edges or within 200mm of fasteners
— Place daubs of GIBFix® adhesive at 300mm centres to intermediate studs
— Sheet edges at door or window openings can be adhesive fixed unless forming part of the perimeter of a bracing element

Stopping

— Refer to the Jointing and Finishing section (p. 78)

*Some GIB® Performance Systems may require different fastener lengths and types. Refer to the applicable GIB® System literature for more information.

Timber Frame – Vertically Fixed

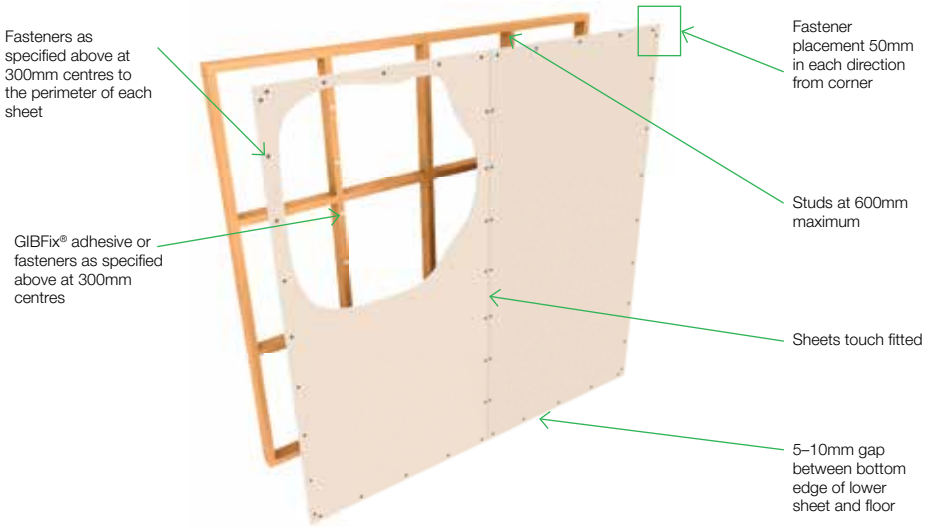

4.3 GIB® PLASTERBOARD INSTALLATION – WALLS

For installation guidance on GIB EzyBrace® and GIB Aqualine® Wet Area Systems refer to the GIB® Performance Systems section.

For all other GIB® Performance Systems refer to the relevant GIB® systems literature.

4.3.3 Steel Frame – Horizontally Fixed

Metal framing to which GIB® plasterboard is fixed must be in accordance with AS/NZS 4600 or NASH Standard. The lining thickness for specific design steel framing systems can be determined by the designer as a component in the system.

For other light steel framing application a minimum thickness of 13mm GIB® plasterboard shall be used.

Wall Framing

- Steel stud dimensions to be min. 64 x 34 x 0.50mm nominal with a 6mm return
- Steel channel dimensions to be min. 64 x 30 x 0.50mm nominal
- Studs must be spaced at 600mm centres maximum
- Ensure that the studs are placed with the open side facing in the same direction (see diagram p. 42)

Fasteners

- 13mm GIB® plasterboard, minimum 25mm x 6g GIB® Grabber® fine thread self taping screws*

Installation

- 300mm to top and bottom channels and end studs
- Pairs of single fasteners to each stud where horizontal joint crosses
- Place fasteners no closer than 12mm from paper bound sheet edge or 18mm from any cut edge
- It is recommended that fasteners at wall corners be placed 50mm in from the corner in each direction
- Do not place GIBFix® adhesive at sheet edges or within 200mm of fasteners
- Place daubs of GIBFix® adhesive at 300mm centres to intermediate studs
- Sheet edges at door or window openings can be adhesive fixed unless forming part of the perimeter of a bracing element

Stopping

- Refer to the Jointing and Finishing section (p. 78)

*Some GIB® Performance Systems may require different fastener lengths and types. Refer to the applicable GIB® System literature for more information.

Steel Frame – Horizontally Fixed

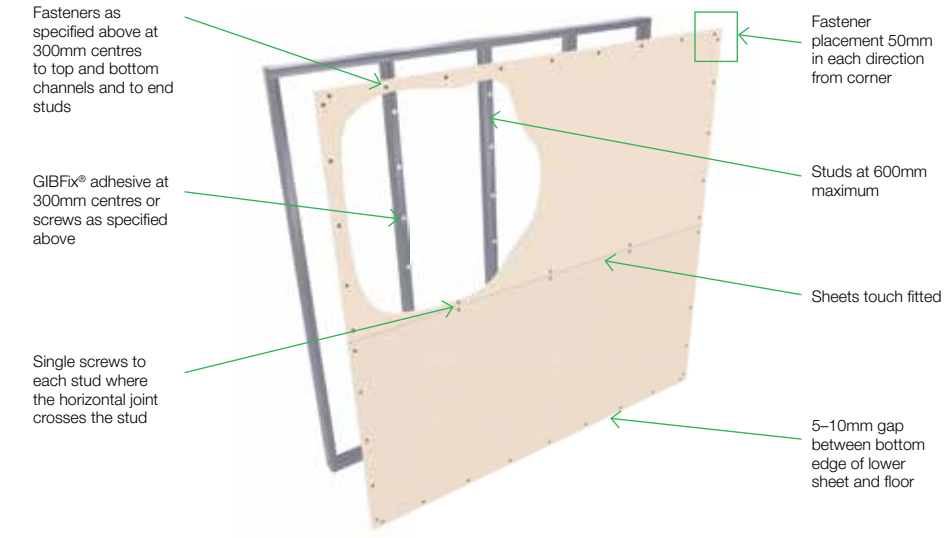

4.3 GIB® PLASTERBOARD INSTALLATION – WALLS

For installation guidance on GIB EzyBrace® and GIB Aqualine® Wet Area Systems refer to the GIB® Performance Systems section.

For all other GIB® Performance Systems refer to the relevant GIB® systems literature.

4.3.4 Steel Frame – Vertically Fixed

Metal framing to which GIB® plasterboard is fixed must be in accordance with AS/NZS 4600 or NASH Standard. The lining thickness for specific design steel framing systems can be determined by the designer as a component in the system.

For other light steel framing application a minimum thickness of 13mm GIB® plasterboard must be used.

Wall Framing

- Minimum steel stud dimensions to be min. 64 x 34 x 0.50mm nominal with a 6mm return
- Steel channel dimensions to be min. 64 x 30 x 0.50mm nominal
- Studs shall be spaced at 600mm centres maximum
- Ensure that the studs are placed with the open side facing in the same direction (see diagram p. 42)

Fasteners

- 13mm GIB® plasterboard, minimum 25mm x 6g GIB® Grabber® fine thread screws*

Installation

- 300mm to centres around sheet perimeter
- Place fasteners no closer than 12mm from paper bound sheet edge or 18mm from any cut edge
- It is recommended that fasteners at wall corners be placed 50mm in from the corner in each direction
- Do not place GIBFix® adhesive at sheet edges or within 200mm of fasteners
- Place daubs of GIBFix® adhesive at 300mm centres to intermediate studs
- Sheet edges at door or window openings can be adhesive fixed unless forming part of the perimeter of a bracing element

Stopping

- Refer to the Jointing and Finishing section (p. 78)

*Some GIB® Performance Systems may require different fastener lengths and types. Refer to the applicable GIB® System literature for more information.

Steel Frame – Vertically Fixed

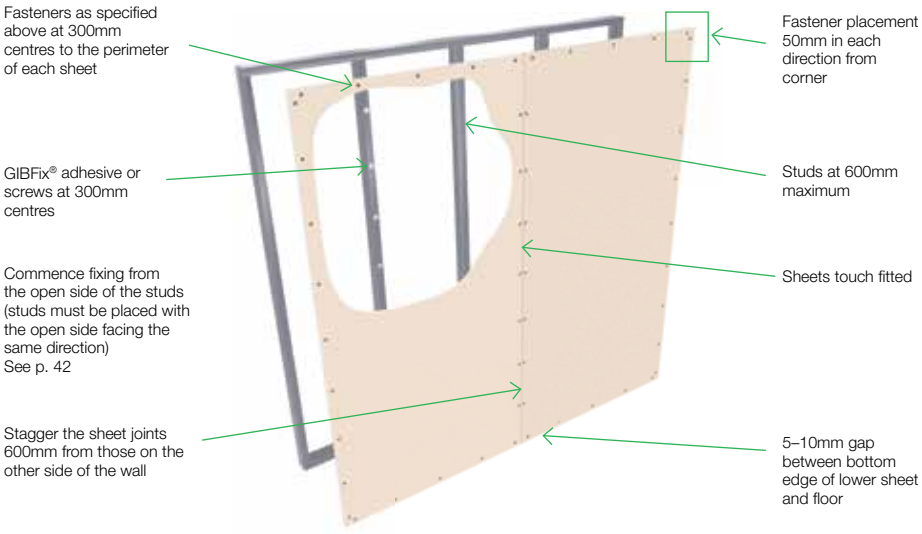

4.3.5 Fastening to Metal Studs

Correct Method

As the face of a steel stud can deflect initially, the correct sequence of attaching the plasterboard is important. The first sheet is attached to the open side of the stud which will cause minor deflection but will pull back tight against the sheet when the screw is fully tightened.

When the second sheet is fixed there will be minimal deflection as the open flange is now supported by the previous sheet.

Support the stud to avoid twisting.

Fastening GIB® Plasterboard to Metal Studs

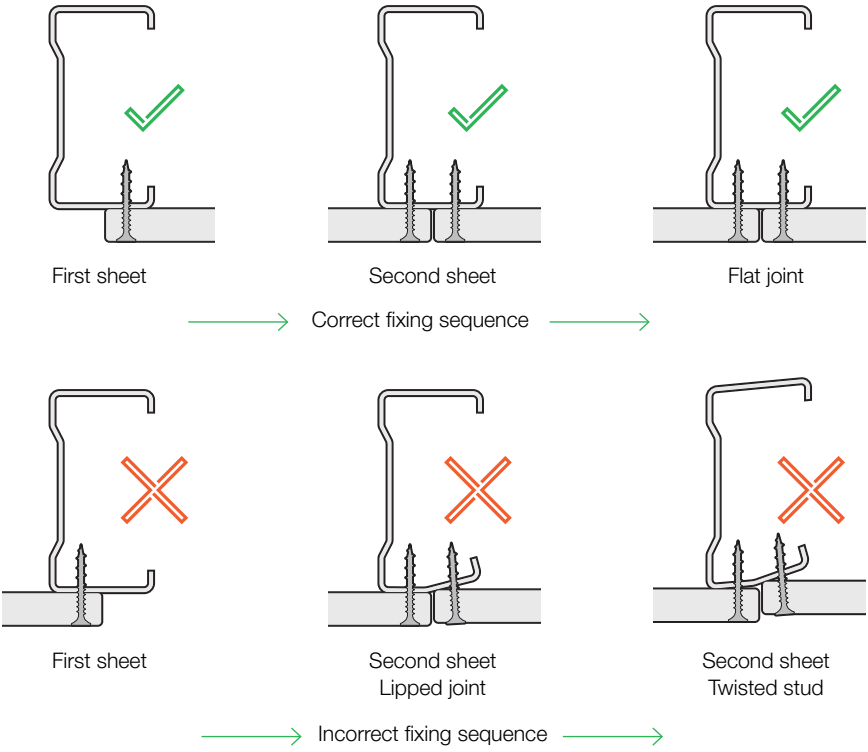

Incorrect fixing method can result in lipped joints, twisted studs and misalignment of the wall.

Temporary Fixing

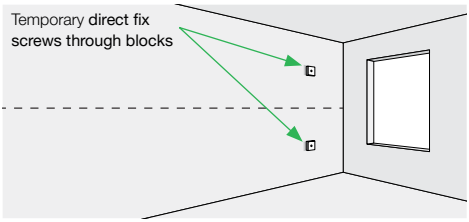

Tip: Occasionally a bow may develop in the board due to storage methods. It might be necessary to temporarily hold the board until the adhesive cures.

Screw through an offcut of plasterboard and remove the block and screw once adhesive has cured.

4.3.6 Grooved Jambs and Architraves

Winstone Wallboards recommends:
The use of architraves for finishing around doors and windows for the following reasons.
- Larger plasterboard sheets can be used, resulting in fewer joints.
- Speedier installation of plasterboard.
- Reduced chance of remedial work due to better placement of joints

Architraves make best practice fixing of plasterboard much simpler. If the use of grooved jambs is unavoidable here is some information to help minimise plasterboard fixing problems.

Grooved door jambs and window liners are an integral part of the New Zealand building scene. Unfortunately their use means that additional joints often need to be made in the wall surface. Installation of grooved jambs is subject to workmanship skills. Unless the jambs are correctly set up and installed, with a 1–2mm clearance for the plasterboard, it is difficult to install the board effectively.

If the use of grooved jambs is unavoidable there are some golden rules to be followed.

The groove must be at least 1–2mm wider than the board that is being used. Trying to get a 10mm plasterboard into a 10mm groove will be difficult.

Line the back of the groove up with the face of the substrate.



Correct installation of grooved jambs using an 11–12mm packer.

Grooved Jambs and Architraves

Summary
- Grooved jambs are designed to be quick and easy to install. Unless they are installed correctly, they can cause delays in plasterboard fixing and remedial work due to poorly positioned joints
- Unless a small amount of time and effort is invested in getting the unit set up correctly, grooved jambs and liners can cause far more problems than they are worth
- Simple best practice carpentry techniques are all that is required to install units accurately
  - Accurate measuring and ordering by the building contractor
  - Accurate fabrication by the joinery manufacturer
  - Careful installation by the installer
- The use of architraves is the recommended method of finishing around doors and windows

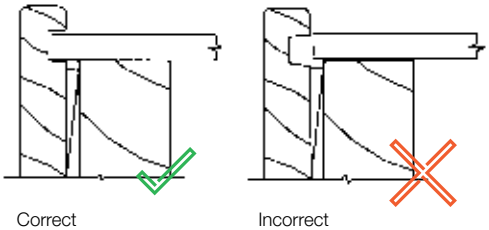

Correct

Incorrect

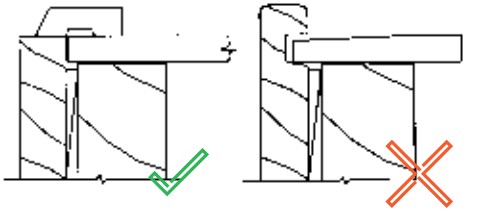

Recommended option using architrave

DO NOT place the tapered edge of a sheet into the groove. This requires unnecessary additional stopping.

4.3.7 Reducing Joints When Using Grooved Jambs

- Line the wall with the opening before lining any adjacent walls
- Joinery must be accurately installed to give 1.5–2mm clearance for sheet into the groove. (see p. 43)
- Groove depth should be 8mm minimum
- Cut lower sheet 20mm less than overall wall length
- Measure from wall or floor to outer edge of joinery frame (not into groove)
- Cut lower sheet as shown in Fig. 2
- Install sheet by placing against the wall and sliding and lifting into grooves as required
- Repeat the procedure for the upper sheet. Measure D from the top edge of the fixed lower sheet to the top outer edge of the window frame. Deduct 6mm from this measurement

Fig. 1

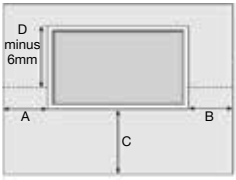

Fig 2. – Lower Sheet

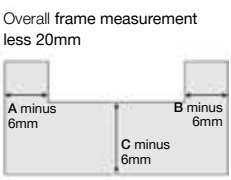

4.4 INSTALLATION TO CEILINGS

4.4.1 General Installation

Truss dimensions and spacings must comply with NZS3604:2011.

The use of GIB® Rondo® metal ceiling battens is strongly recommended. Timber battens can be prone to conditions that contribute to joint failure and popped fasteners. If the use of timber ceiling battens is unavoidable, additional care needs to be taken to ensure that the moisture content is 18% or less (see p. 30).

To limit sag in GIB® plasterboard ceilings, long term uniformly distributed loads such as that of fixtures and fittings and/or overlaid insulation shall not exceed 3kg/m^2 unless independently supported

Winstone Wallboards recommends:

- 13mm GIB® plasterboard on GIB® Rondo® steel battens at 600mm centres
- Ceiling battens are installed after the roof framing is complete and the roof has been loaded
- All ceiling sheets be fixed at right angles to the ceiling framing. Sheets must not be fixed in the same direction as the framing to which it is attached. All ceiling battens in a single area need to run in the same direction to enable this. Sometimes this will require additional nogs to be fitted between trusses. Failure to do this will result in a tapered edge/cut edge joint at a point that is highly susceptible to cracking

General Ceiling Installation



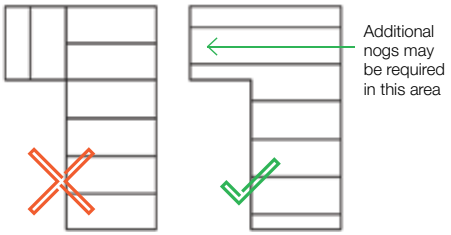

4.4.2 Standard Ceiling Fixing

This information applies to the general installation of GIB® plasterboard. If bracing, fire or noise control is a consideration consult the relevant GIB® Systems literature.

Ceiling Framing

— If using timber ceiling battens, timber moisture content must not exceed 18% prior to lining (see p. 30)
— Battens should all run in the same direction within a ceiling area. Additional nogs may be required to achieve this

Batten Spacing

— 10mm GIB® plasterboard – 450mm maximum
— 13mm GIB® plasterboard – 600mm maximum
— Winstone Wallboards recommends the use of 13mm GIB® plasterboard in ceiling applications for optimal performance

Fasteners

Metal Battens

— Minimum 25mm x 6g GIB® Grabber® fine thread self tapping screws*

Timber Battens

— Minimum 32mm x 6g GIB® Grabber® high thread screws*

Fastener Spacings

— Single screws at the edges and centre of the sheet across the batten
— Single screw at 600mm maximum to the perimeter of the ceiling. See p. 68 for ceiling diaphragm installation
— Place fasteners no closer than 12mm from a taper sheet edge or 18mm from a cut sheet edge

Adhesive

— Place daubs of GIBFix® adhesive at 200mm to intermediaries
— Do not place adhesive at sheet edges or within 200mm of fasteners

Lining

— Sheets should be touch fitted
— Sheets must be fixed at right angles to the ceiling framing unless otherwise specified in GIB® Performance System specifications

Stopping

— Refer to the Joint and Finishing section (p.78)

*Some GIB® Performance Systems may require different fastener lengths and types. Refer to the applicable GIB® System literature for more information

Ceilings

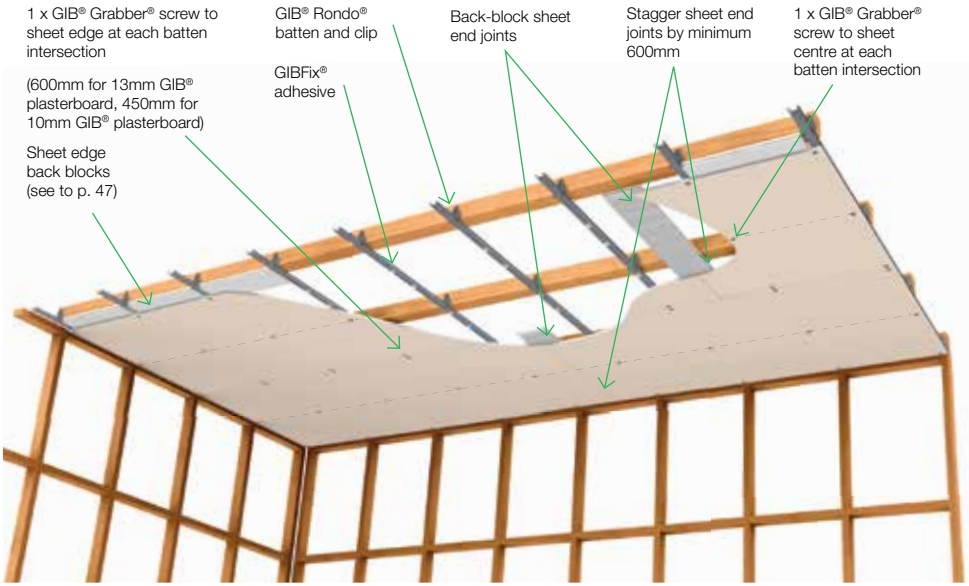

4.4.3 Raking Ceilings and Skillion Roofs

Due to the higher temperatures and low air movement that can occur in raking ceilings it is strongly recommended that clip fixed GIB® Rondo® metal battens are used (these are considered to be ceiling suspension systems).

Because of the heat that can be generated in roof spaces, timber battens can be subjected to conditions that contribute to joint failure and popped fasteners.

The use of control joints or perimeter relief will help reduce the risk of cracking in large, expansive ceilings.

These may not be suitable for use in Fire or Noise Control Systems.

Back blocking of all ceiling joints is highly recommended as it can reduce the likelihood of cracking.

Fixed – Steel Backing Angle

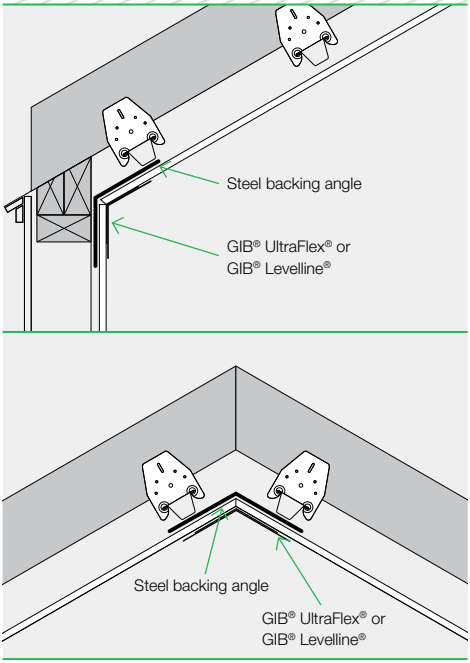

Note: It is recommended that a flexible perimeter relief be used where there is a high risk of movement.

Flexible – Perimeter Relief

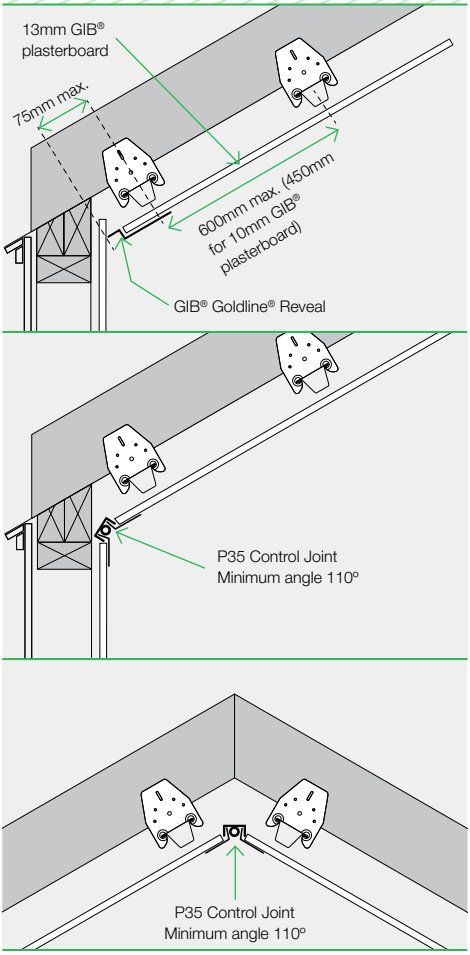

4.4.4 Back Blocking – Butt and Edge Joints

Back blocking is the practice of laminating an off-cut of plasterboard to the back of a joint using GIB-Cove® Bond adhesive.

Back blocking is required to ceiling sheet edge joints as follows:

Timber Battens	When there are 3 or more tapered edge joints in a ceiling area
Metal Battens	When there are 6 or more tapered edge joints in a ceiling area

Back blocking is required to all joints when a Level 5 Finish has been specified.

Back blocking is strongly recommended at sheet end joints in ceilings. Some fire rated systems require that joints are made on solid blocking and that requirement takes precedence and must be followed. Refer to GIB® Fire Rated Systems specifications for more information.

Back blocking is not required for a Level 4 Finish when a suspension system has been used. This includes GIB® Rondo® metal ceiling batten system fixed on clips. See p. 46. Sheets ends should be back blocked.

Due to wind pressure when garage door is open, and vibration from garage door opening, it is recommended that all sheet joints in garage ceilings are back blocked.

Back Blocking Comprises 2 Steps:

- Laminating a piece of plasterboard to the back of the joint
- Forming a tapered edge to help form a flat stopped joint

Step 2 can be omitted but the stopped joint will need to be much wider (500–600mm) in order to minimise the effect of the stopping joint thickness.

Back Blocking Technique

- Make back blocks at least 300mm wide and cut to fit loosely between framing members
- Apply GIB-Cove® Bond to the underside of the back block with a 6–8mm notched trowel
- Do not use synthetic wall board adhesive for back blocking
- If possible, attach the back block to the back of the joint from above
- If access from above is not possible, apply GIB-Cove® Bond to one half of the back block before attaching the back block to the edge of the sheet. Install a couple of screws through the tapered edge to secure the back block
- Apply GIB-Cove® Bond to the remainder of the back block just before fixing the next sheet

Back Blocking

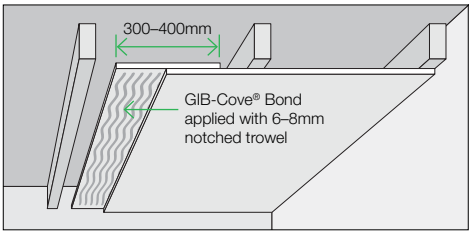

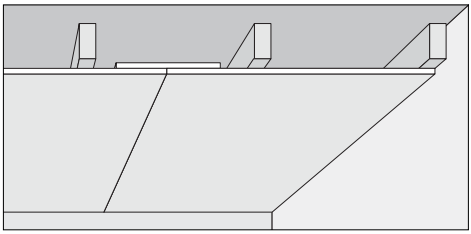

Creating a Tapered Edge

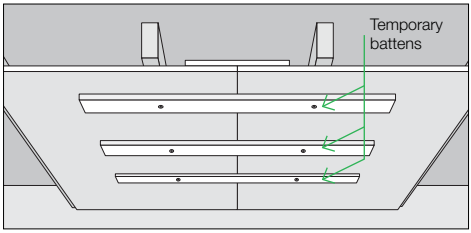

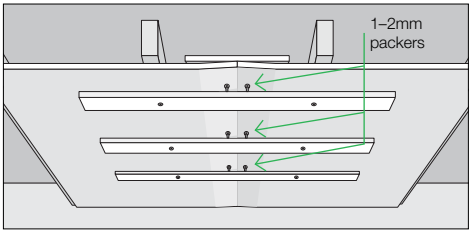

4.4.5 Control Joints – Walls and Ceilings

These control joints and maximum recommended centres aim to provide relief from stresses associated with changes in temperature, humidity and the response of dissimilar construction materials (e.g. metal, timber, gypsum and plasterboard). For more significant structural movements consult the building designer.

Walls

— In long unbroken partitions or wall runs, control joints are required at maximum 12m centres They are also required where structural control joints occur in the primary structure
— Door frames extending from floor to ceiling constitute effective control joints

Ceilings

— Extensive ceiling areas must have control joints spaced at maximum 12m centres
— It is recommended joints be positioned to intersect lighting fixtures, heating vents or air diffusers

Other situations

— Where GIB® plasterboard meets dissimilar materials, it must be isolated by an edge trim or casing bead
— In stairwells and high timber framed walls, provision should be made for timber movement by leaving a 20mm gap between the sheet lining at, or near, the upper floor joists. This gap can be covered by a suitable cover batten

Joint Control	
Joint Position	**Maximum Centres**
Walls	12 metres
Ceilings	12 metres

Perimeter relief using GIB® Goldline® Tape-On Trims

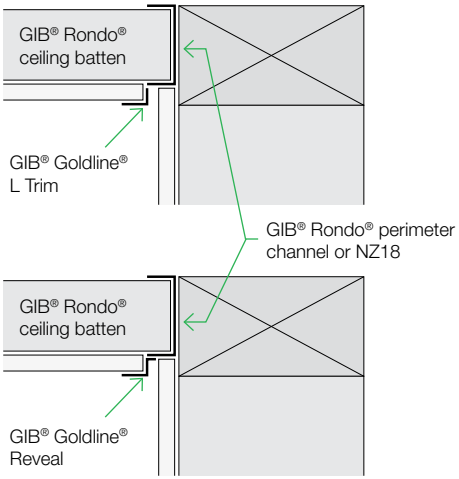

Control Joints in Ceilings – Recommendation to Reduce Risk of Cracking

There are some common places within the 12m spacing where cracks are most likely to occur in ceilings (as shown below).

It is recommended to consider installing control joints in these locations (as shown below) to reduce the risk of cracking.

Where hallways exit from a larger ceiling area.	At internal corners in irregular shaped ceilings or where the main ceiling would look better divided into smaller sections.	At openings such as skylights, voids or recessed strip lighting. This may also include designated functional areas of a space.
Plan view 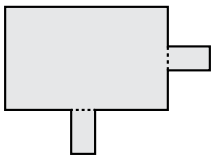	Plan view 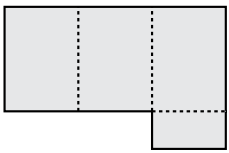	Plan view 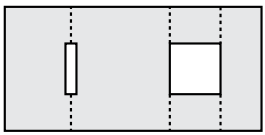

4.4.5 Control Joints – Walls and Ceilings

Installation of the GIB® Rondo® P35 control joint

- Allow an 18mm minimum gap between the plasterboard sheets
- Locate the GIB® Rondo® P35 control joint centrally in the gap. Staple both flanges to the lining at 150mm centres maximum
- Finish with jointing compound using the channel nibs as screeding guides
- When the joint is dry remove the protective tape

Control joint using GIB® Goldline® Platinum trim

- Allow a 14–17mm gap between the plasterboard sheets
- Install GIB® Goldline® Platinum GR reveal to one side of joint
- Install GIB® Goldline® L Trim to the other side. Use a spacer to provide an even gap between the trim. This can be between 3–12mm
- Apply compounds as described on p. 83–84

GIB® Plastic W-profile Control Joint

- Discrete finish and has tear-away tabs for easy installation
- This trim is thicker than the other control joint trims and thus may have implications for the final joint height
- Available in 3.0m lengths

Note: Contact the GIB® Helpline 0800 100 442 for detailing of control joints in GIB® Performance Systems (e.g. fire, noise, bracing).

Installation of the Rondo® P35 control joint

1.

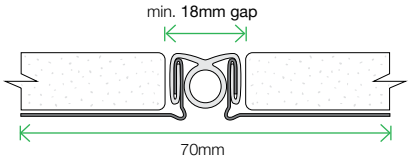

Control joint using GIB® Goldline® Platinum trim

2.

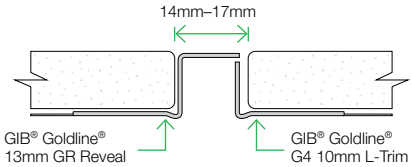

GIB® Plastic W-profile Control Joint

3.

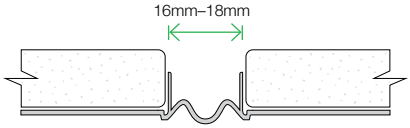

GIB® Rondo® Steel Battens

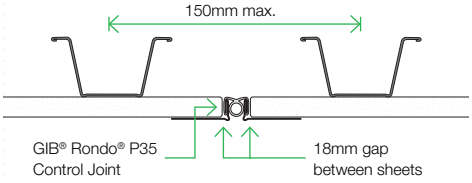

Timber Stud Walls

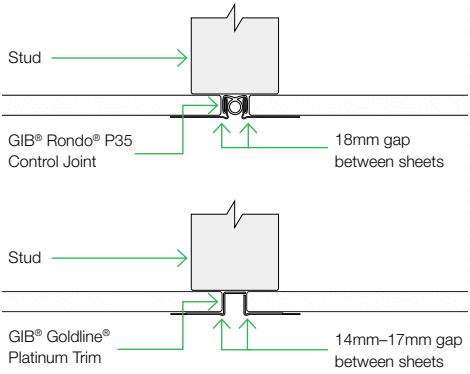

Two Storey Full Height Wall with Expansion Joint

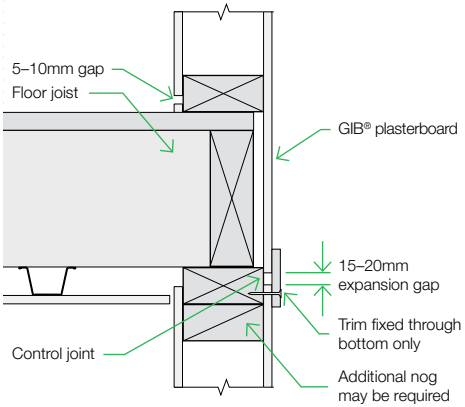

Masonry Junction Timber or Steel Framing

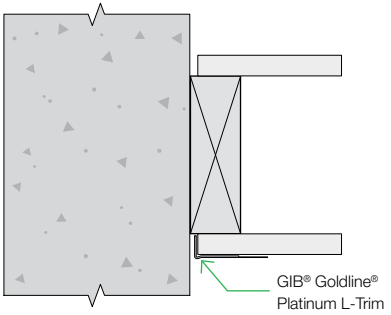

4.4.6 GIB® Rondo® 310 Metal Batten System Installation Instructions

The GIB® Rondo® 310 system forms a strong, stable and flat substrate for ceilings in residential and commercial applications. The 35mm dimension allows it to be directly substituted into ceilings where 35mm timber battens would traditionally have been used. Consult an electrical contractor for any earthing requirements that may need to be incorporated.

There are two methods of fixing GIB® Rondo® 310 metal battens.

Recommended method

Clipped using either:

- 311D clip for a drop of 0–30mm
- 313 clip where a larger drop is required between the bottom of the truss chord, joist or rafter and the back of the ceiling batten

  A drop of up to 130mm can be achieved in order to accommodate services or variations in framing heights
- GIB Quiet Clip® in GIB Noise Control® Systems

Alternative method

- Directly by fastening with pairs of min. GIB® Grabber® 32mm x 8g wafer head screws through the flange
- Alternatively pairs of min. 45mm x 2.8mm flat head nails can be used
- For fixing to steel framing a drill tip screw is recommended

Note: If the 310 system is to be used in a ceiling diaphragm the batten needs to be screwed directly through the flanges to the framing.

See detail on page (69)

GIB® Rondo® 310 System

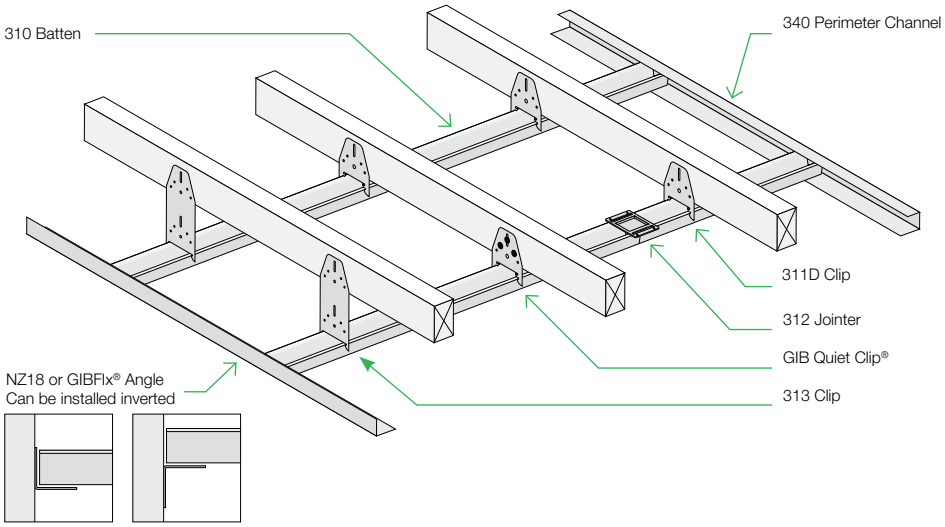

For ceiling diaphragm details refer to p. 66

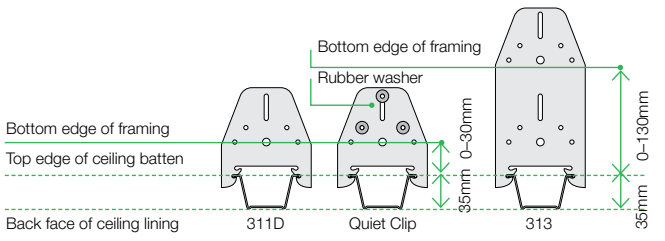

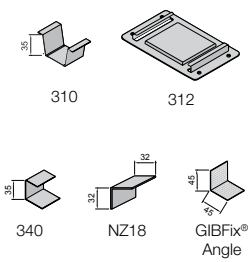

4.4.6 GIB® Rondo® 310 Metal Batten System Installation Instructions

GIB® Rondo® 310 System

Recommended Best Practice Details

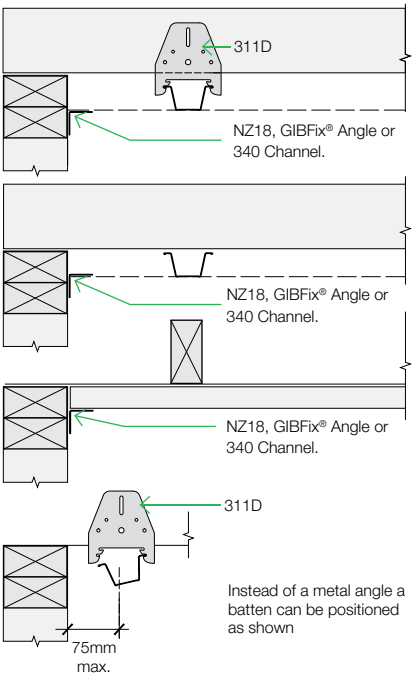

Other Details

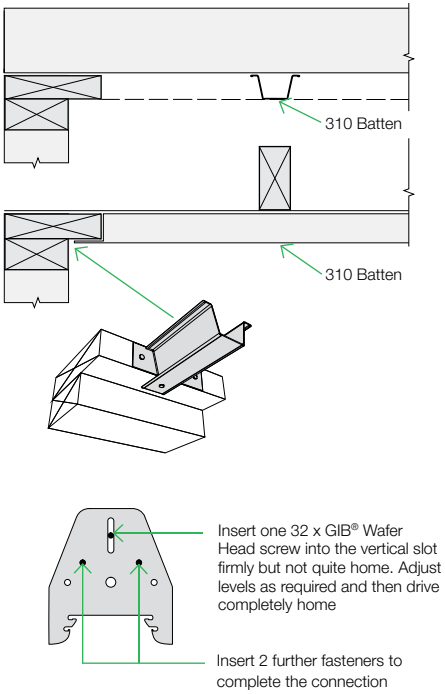

— Establish a datum line for the ceiling
— Place a string line on the datum line at right angles to the battens, under the truss or joist closest to the centre of the room
— Install GIB® Rondo® clips at 600mm centres (450mm for 10mm GIB® plasterboard) using the string line to establish the correct position
— Cut the batten to the required length using snips or a hacksaw
— Insert the batten into the channel at each end and fit into the clip
— Install remainder of clips ensuring that the batten is straight and flat

GIB® Rondo® 310 Batten Span Table for Residential Internal Applications

GIB® Plasterboard Thickness – Single layer	10mm	13mm
Maximum Batten Spacing (mm)	450	600
Multi Span (mm)	1200	
Single Span and Garages (mm)	900	

Battens

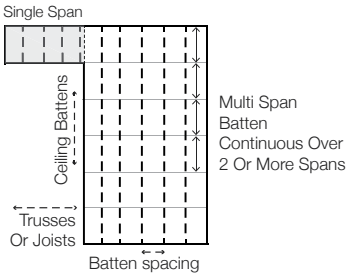

4.4.7 GIB® Rondo® 308 Metal Batten System Installation Instructions

The GIB® Rondo® 308 system is a light weight yet very strong ceiling batten. In addition to its function as a ceiling batten it can also be used as a wall furring channel and is an integral part of GIB Noise Control® Systems for walls. Consult an electrical contractor for any earthing requirements that may need to be incorporated.

Recommended method

The GIB® Rondo® 308 system is installed using either:

- 226 clip for a drop of 0–30mm
- 394 clip where a larger drop is required between the bottom of the truss chord, joist or rafter and the back of the ceiling batten. Up to 130mm clearance between the bottom of the framing and the back of the batten of can be achieved in order to accommodate services or variations in framing heights

Note: If the 308 system is to be used in a ceiling diaphragm, the batten needs to secured directly to the framing (see p. 69).

GIB® Rondo® 308 System

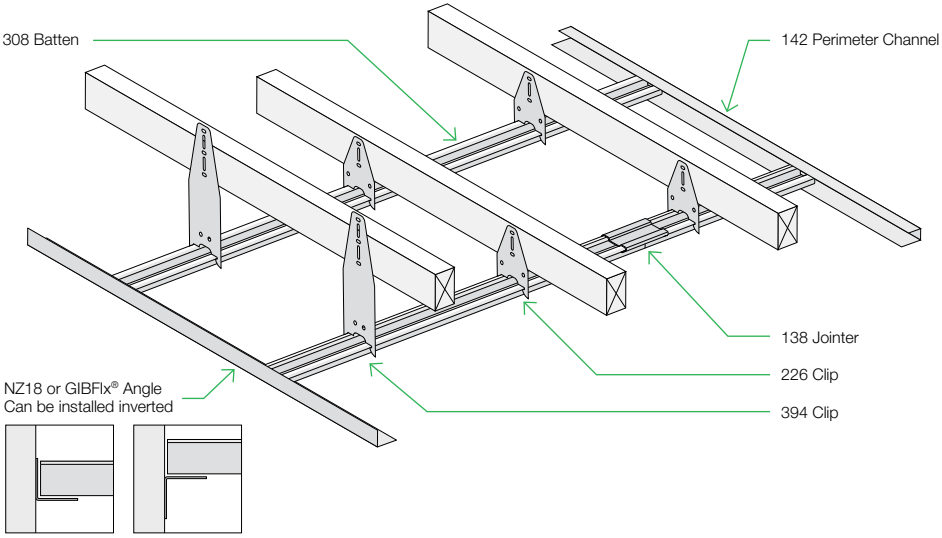

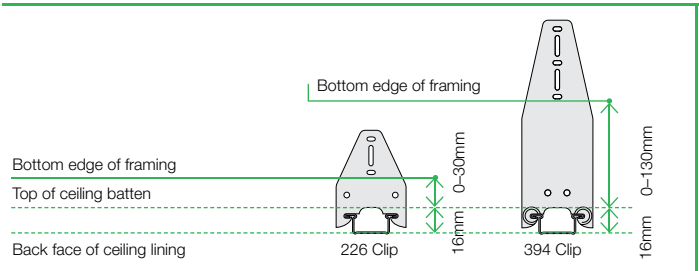

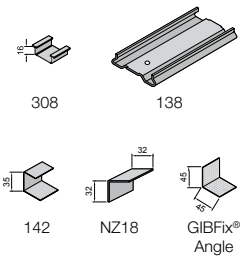

4.4.7 GIB® Rondo® 308 Metal Batten System Installation Instructions

GIB® Rondo® 308 System

Recommended Best Practice Details

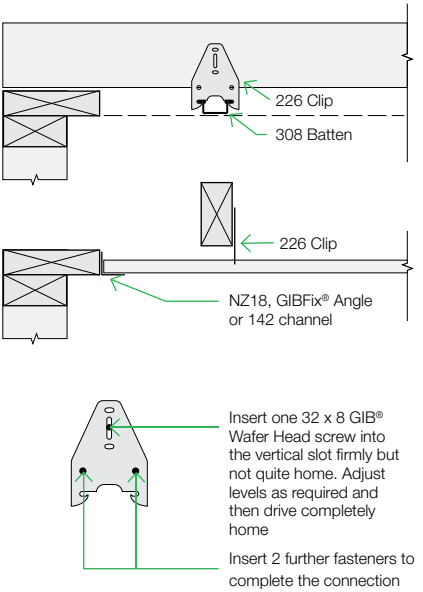

Other Details

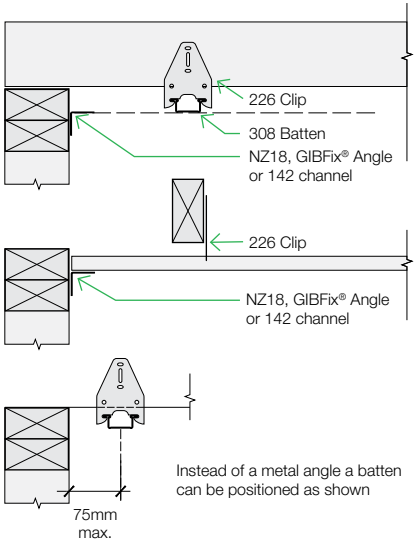

- Establish a datum line for the ceiling
- Place a string line on the datum line at right angles to the battens, under the truss or joist closest to the centre of the room
- Install GIB® Rondo® clips at 600mm centres (450mm for 10mm GIB® plasterboard) using the string line to establish the correct position
- Cut the batten to the required length using snips or a hacksaw
- Insert the batten into the channel at each end and fit into the clip
- Install remainder of clips ensuring that the batten is straight and flat

GIB® Rondo® 308 Batten Span Table for Residential Internal Applications

GIB® Plasterboard Thickness – Single layer	10mm	13mm
Maximum Batten Spacing (mm)	450	600
Multi Span (mm)	1200	
Single Span and Garages (mm)	900	

Battens

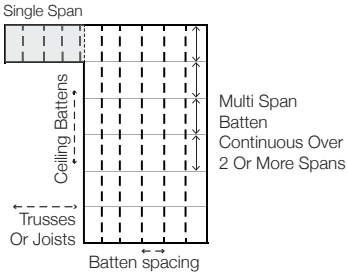

4.4.8 GIB® Rondo® Suspended Ceiling System

The range of GIB® Rondo® suspended ceiling componentry provides additional clearance above the ceiling level. This could be to run electrical, plumbing or ventilation equipment. The system allows for the ceiling lining material to be directly attached to the lower face of the battens.

This is not to be confused with a two way grid system which accommodates proprietary ceiling tiles. The components can be assembled in a wide range of combinations to suit a variety of applications. Refer to GIB® Rondo® System literature for more information.

GIB® Rondo® Suspended Ceiling Components

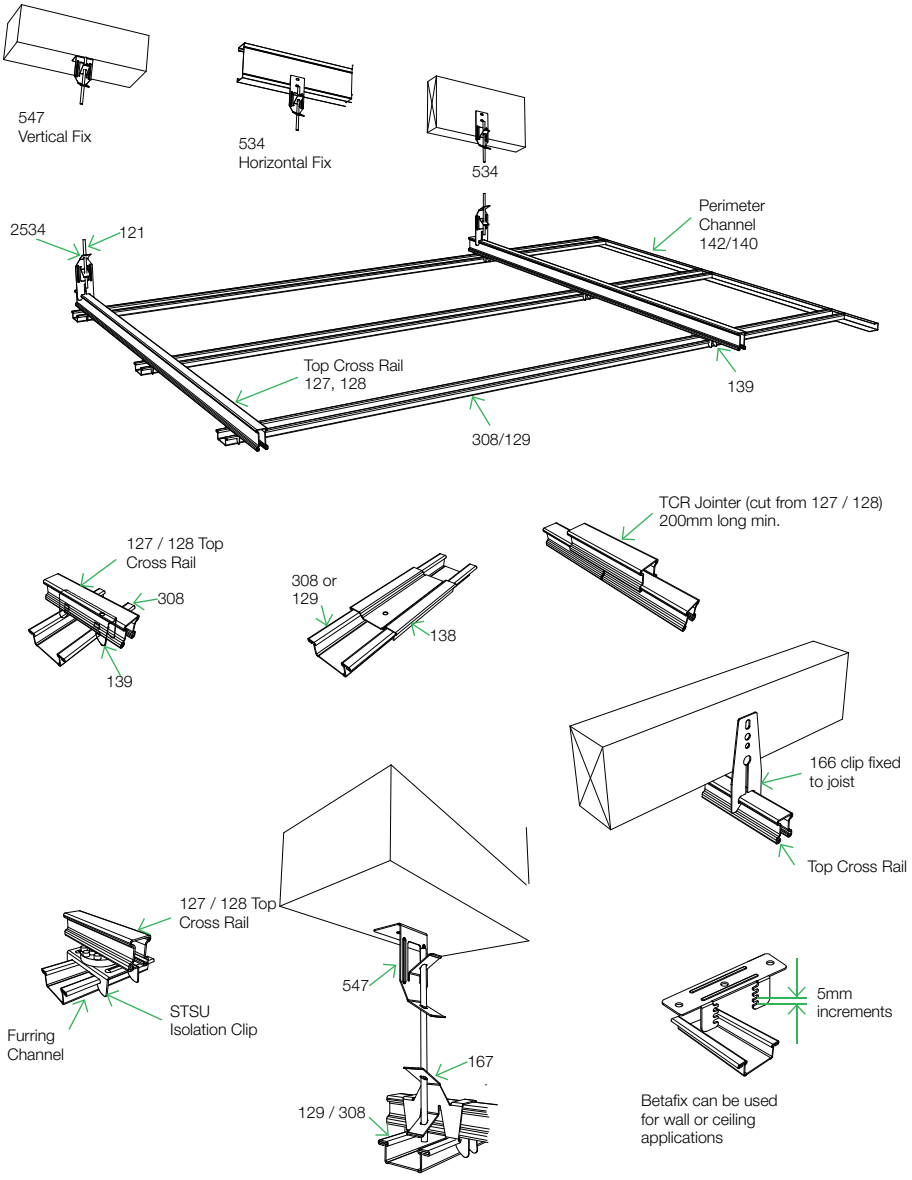

4.5 CURVING GIB® PLASTERBOARD

GIB® plasterboard can be curved. Curvature is dependent on the thickness and type of board and whether the board is applied wet or dry. Sheets must be fixed horizontally to walls.

The radii shown are for GIB® Standard and GIB Ultraline®. Other performance boards such as GIB Fyreline® and GIB Aqualine® can also be curved but with slightly increased radii due to the increased density of the board.

It is not recommended to curve high density boards such as GIB Braceline / GIB Noiseline® or GIB Toughline® due to the risk of breakage.

Minimum Bending Radii of GIB® Plasterboard

Board Thickness/Type	Minimum Radius (Wet)	Minimum Radius (Dry)
10mm GIB® Standard	900mm	1200mm
13mm GIB® Standard	1000mm	1500mm
10mm GIB Ultraline®	1000mm	1500mm
13mm GIB Ultraline®		1500mm

Framing Centres

Wall or Ceiling Radius	Maximum Stud, Batten or Joist Spacing
900mm–1200mm	200mm
Over 1200mm–3000mm	300mm
Over 3000mm	400mm

Application Method

- Ensure that framing spacings are correct
- If possible, select board length to allow for one unbroken panel to cover the entire curve with enough extra length to extend 300mm beyond each end
- Alternatively apply water with a paint roller to both sides
- If creating an outside curve, begin installation at one end and fasten the sheet as it is wrapped around the curve
- If creating an inside curve, start fastening the sheet at the centre of the curve and work outwards to the end of the sheet

Note: Lining the inside of the curve will be more difficult than lining the outside and will require additional labour.

Curving GIB® Plasterboard

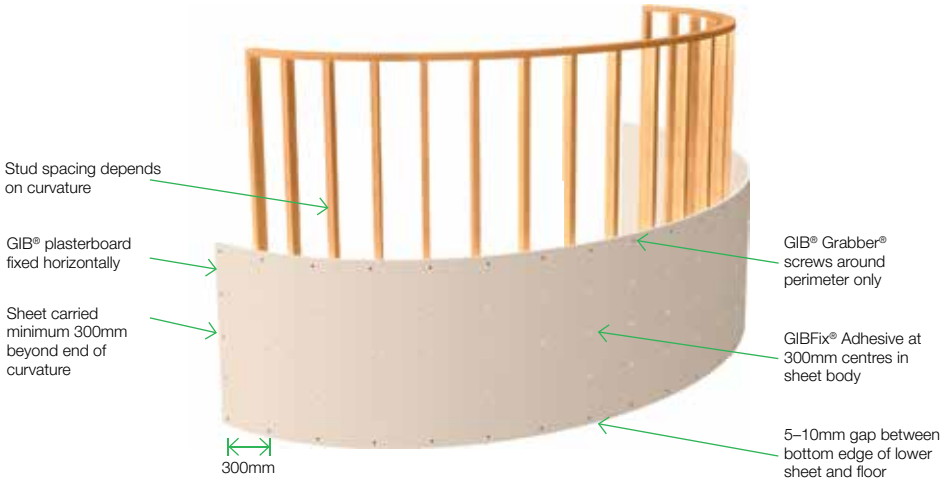

4.6 FIXING TO MASONRY

Direct bonding of GIB® plasterboard to concrete or brick masonry walls must only be considered when the concrete or masonry substrate is thoroughly dry and adequately protected against moisture penetration.

The substrate must be firm, dry, and free of dust, grease, release agents and curing compounds.

In situations where dampness or rain penetration problems exist, corrective measures must be taken prior to installation of interior linings.

Movement and control joints in the main structure must be carried through the GIB® plasterboard linings. This can be achieved by installing a control joint in the plasterboard.

Direct Bonding (For Sheet Heights up to 3m)

- Determine the sheet position for either vertical or horizontal fixing and mark on wall
- GIB® plasterboard sheets can be fixed vertically or horizontally. Horizontal fixing creates fewer joints and is recommended
- Use GIB-Cove® Bond to bond the GIB® plasterboard to concrete or masonry surfaces
- Mix GIB-Cove® Bond to a smooth, thick consistency
- Apply GIB-Cove® Bond daubs approximately 50mm diameter x 12mm thick at 300–400mm centres vertically and 500–600mm centres horizontally. Ensure that adhesive is placed no closer than 25mm from the edge of the sheet
- Where irregularities up to 10mm occur on the masonry surface, use larger daubs of adhesive to bridge the gap
- Position the sheet and press into place
- Obtain true alignment and flatness by using a long straight edge over the surface of the sheet
- Alternatively, apply adhesive over the entire back surface of the sheet using a notched trowel
- Apply GIB-Cove® or GIB® Trims to wall and ceiling intersections
- Fix skirting and architrave with masonry nails or adhesive

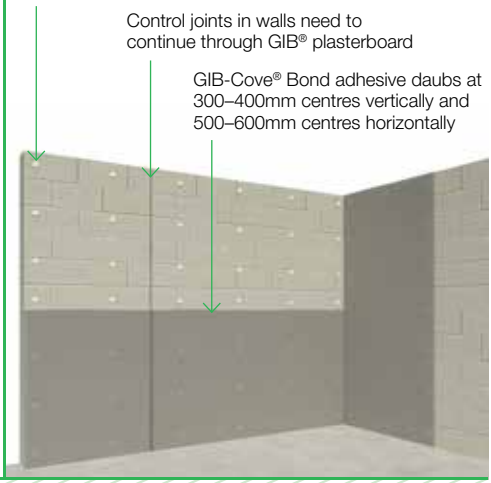

Wall Strapping must be used:

- Wall Strapping must be used:
  - When the concrete or masonry wall is below ground level
  - When the concrete or masonry wall is an external wall, unless a proprietary external weatherproofing system can be verified as providing weather tightness for the life of the building
  - In bathrooms, laundries and other wet areas
  - When the concrete or masonry substrate or paintwork is in poor condition
  - When the wall surface contains irregularities of more than 8–10mm strapping can be packed to provide a flat surface for the plasterboard
  - For walls in excess of 3.0m in height
- Use either nominally 50 x 25mm timber strapping or metal furring channels. Deeper strapping may be required to accommodate insulation requirements
- Fix DPC behind timber strapping
- Fix strapping vertically to the wall surface at a maximum of 600mm centres, with either a continuous horizontal batten or nogs at the top and bottom of the wall
- Install services prior to installing GIB® plasterboard linings



4.6 FIXING TO MASONRY

If insulation is required to concrete or masonry, it is recommended that GIB® Rondo® 308 battens are clipped to GIB® Rondo® A239 clips as shown. A239 clips should be spaced at 1200mm centres (maximum) vertically and 600mm centres (maximum) horizontally.

Anchor bolt

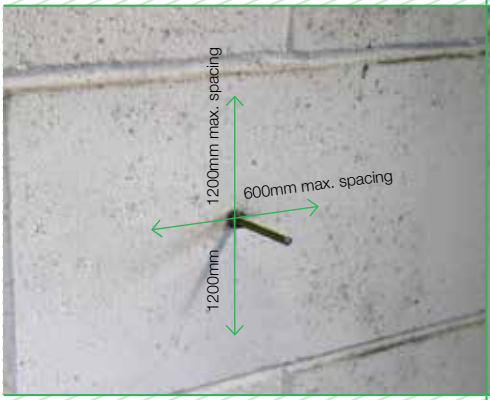

Polystyrene



A239 Clip



308 Batten



GIB® Plasterboard overlay



5.0 GIB® PERFORMANCE SYSTEMS

The GIB® Performance Systems section covers installation of GIB EzyBrace® and GIB Aqualine® Wet Area Systems. For other systems including GIB Noise Control®, GIB® Fire Rated, GIB® Tough and GIB® Intertenancy Barrier Systems refer to the appropriate GIB® systems literature.

5.1 GIB® BRACING SYSTEMS

This section covers the installation of GIB EzyBrace® Systems to timber framing to NZS 3604:2011. Full design details can be found in the GIB EzyBrace® Systems literature.

Bracing of steel framed walls is by specific design. For assistance refer to the document GIB EzyBrace® for Light Steel Frame Systems available from gib.co.nz or nashnz.org.nz.

GIB® Bracing elements code system:	
GS	GIB® Standard plasterboard or other similar thickness
BL	GIB Braceline®
P	7mm structural plywood manufactured to AS/NZS 2269:2012
1	Bracing element fixed to one side of the wall only
2	Bracing element fixed to both sides of the wall
N	Panel hold down not required
H	GIB HandiBrac® or metal strap and hold down bolt
NOM	Nominal fixing as per p. 38-39

5.1.1 Installation Summary

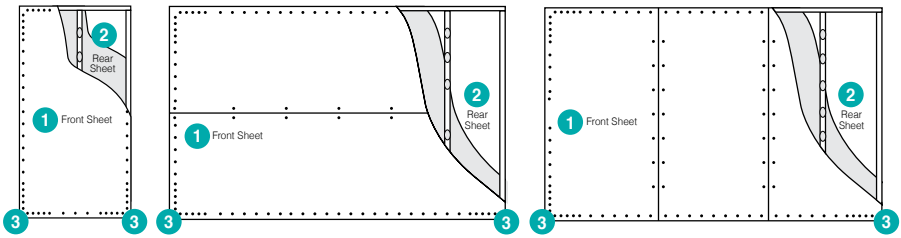

Sheet Installation

	Front Sheet 1		Rear Sheet 2		Panel Hold-Down Fixings 3	Fastener Spacing
	Lining	**Fasteners**	**Lining**	**Fasteners**		
GS2-NOM	Any 10mm or 13mm GIB® plasterboard	Minimum 32mm x 6g GIB® Grabber® high thread screws	Any 10mm or 13mm GIB® plasterboard	Minimum 32mm x 6g GIB® Grabber® high thread screws	Not Required	Corner fastening pattern as illustrated on p. 65. All four corners of GS2-NOM bracing element must be fastened at 50mm and 250mm from the edge of the sheet at 300mm centres
GS1-N	Any 10mm or 13mm GIB® plasterboard	Minimum 32mm x 6g GIB® Grabber® high thread screws	Not Required	Not Required	Not Required	**GIB® Plasterboard** Corner fastening pattern as illustrated on p. 65 Fasteners at 150mm to bracing element perimeter and: at 300mm centres to intermediate sheet joints for vertical fixing, or at stud/sheet junction for horizontally fixed elements, and GIBFix® adhesive daubs at 300mm are to intermediate framing **Structural Plywood** Fasteners at 150mm around the perimeter of every sheet and at 300mm centres to intermediate studs. Place fasteners no closer than 7mm from sheet edges. Plasterboard corner fastener pattern does not apply to plywood
GS2-N			Any 10mm or 13mm GIB® plasterboard	32mm x 6g GIB® Grabber® high thread screws		
GSP-H			Minimum 7mm structural plywood manufactured to AS/NZS 2269	50mm x 2.8mm flat head galvanised or stainless steel nails	Yes	
BL1-H	10mm or 13mm GIB Braceline®	Minimum 32mm x 6g GIB® Grabber® high thread screws	Not required	Not required		
BLG-H			Any 10mm or 13mm GIB® plasterboard	32mm x 6g GIB® Grabber® high thread screws		
BLP-H			Minimum 7mm structural plywood manufactured to AS/NZS 2269	50mm x 2.8mm flat head galvanised or stainless steel nails		

Note: Minimum bracing element length is 400mm

5.1.2 System Specifications

GS2-NOM

1. 10mm or 13mm GIB® Standard plasterboard fixed to each side of the wall framing
2. Corner fastening pattern applies (see p. 65)
3. 32 x 6g GIB® Grabber® screws or GIB® Grabber® Dual Thread screws at 300mm to perimeter
4. Panel hold downs not required
5. Centre of the sheet may be fixed with adhesive or fastenings at 300mm
6. Joints and fastener heads must be stopped
7. GIB® tape must be used in joints
8. Sheets may be fixed horizontally or vertically

Bracing Element – Plasterboard side shown

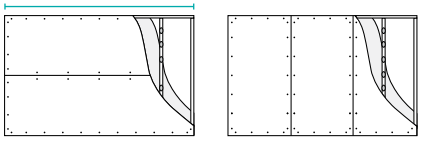

Horizontal Fixing | Vertical Fixing

GS1-N

1. Any 10mm or 13mm GIB® plasterboard to one side of the wall only
2. Corner fastening pattern applies (see p. 65)
3. 32 x 6g GIB® Grabber® screws or GIB® Grabber® Dual Thread screws at 150mm to perimeter
4. Centre of the sheet may be fixed with adhesive or fastenings at 300mm
5. Panel hold downs not required
6. Joints and fastener heads must be stopped
7. GIB® tape must be used in joints
8. Sheets may be fixed horizontally or vertically

Bracing Element – Plasterboard side shown

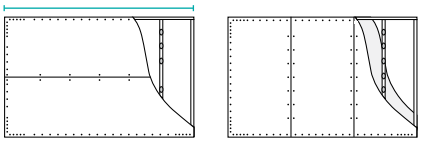

Horizontal Fixing | Vertical Fixing

GS2-N

1. Any 10mm or 13mm GIB® plasterboard to both sides of the wall. Both sides fixed as bracing elements
2. Corner fastening pattern applies (see p. 65)
3. 32 x 6g GIB® Grabber® screws or GIB® Grabber® Dual Thread screws at 150mm to perimeter
4. Centre of the sheet may be fixed with adhesive or fastenings at 300mm
5. Panel hold downs not required
6. Joints and fastener heads must be stopped
7. GIB® tape must be used in joints
8. Sheets may be fixed horizontally or vertically

Bracing Element – Plasterboard side shown

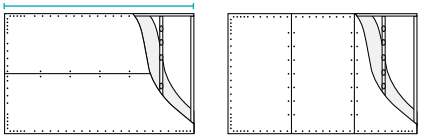

Horizontal Fixing | Vertical Fixing

GSP-H

1. Any 10mm or 13mm GIB® plasterboard to one side of the wall
2. 7mm structural plywood to the other side
3. Corner fastening pattern applies (see p. 65)
4. 32 x 6g GIB® Grabber® screws or GIB® Grabber® Dual Thread screws at 150mm to perimeter (plasterboard side) 50 x 2.8mm FH nails at 150mm to perimeter. Corner fastening pattern not applicable to plywood side
5. Panel hold downs required
6. Centre of the sheet may be fixed with adhesive or fastenings at 300mm
7. Joints and fastener heads must be stopped
8. GIB® tape must be used in joints
9. Sheets may be fixed horizontally or vertically

Bracing Element – Plasterboard side shown

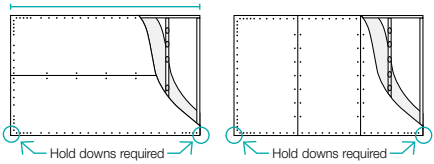

Horizontal Fixing | Vertical Fixing

5.1.2 System Specifications

BL1-H

1. 10mm or 13mm GIB Braceline® to one side of the wall only
2. Corner fastening pattern applies (see p. 65)
3. 32 x 6g GIB® Grabber® screws or GIB® Grabber® Dual Thread screws at 150mm to perimeter
4. Centre of the sheet may be fixed with adhesive or fastenings at 300mm
5. Panel hold downs required
6. Joints and fastener heads must be stopped
7. GIB® tape must be used in joints
8. Sheets may be fixed horizontally or vertically

Bracing Element – Plasterboard side shown

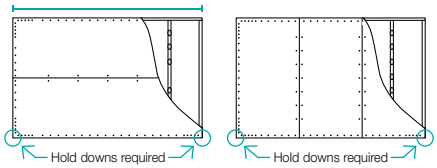

Horizontal Fixing | Vertical Fixing

BLG-H

1. 10mm or 13mm GIB Braceline® to one side of the wall
2. Any 10mm or 13mm GIB® plasterboard to the other side. Both sides fixed as bracing elements
3. Corner fastening pattern applies (see p. 65)
4. 32 x 6g GIB® Grabber® screws or GIB® Grabber® Dual Thread screws at 150mm to perimeter
5. Centre of the sheet may be fixed with adhesive or fastenings at 300mm
6. Panel hold downs required
7. Joints and fastener heads must be stopped
8. GIB® tape must be used in joints
9. Sheets may be fixed horizontally or vertically

Bracing Element – Plasterboard side shown

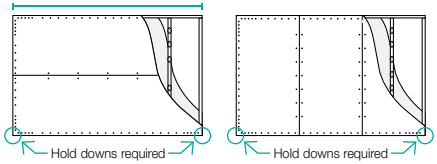

Horizontal Fixing | Vertical Fixing

BLP-H

1. 10mm or 13mm GIB Braceline® to one side of the wall only
2. 7mm structural plywood to the other side
3. Corner fastening pattern applies (see p. 65)
4. 32 x 6g GIB® Grabber® screws or GIB® Grabber® Dual Thread screws at 150mm to perimeter (plasterboard side). 50 x 2.8mm FH nails at 150mm to plywood perimeter. Corner fastening pattern not applicable (plywood side)
5. Panel hold downs required
6. Centre of the sheet may be fixed with adhesive or fastenings at 300mm
7. Joints and fastener heads must be stopped
8. GIB® tape must be used in joints
9. Sheets may be fixed horizontally or vertically

Bracing Element – Plasterboard side shown

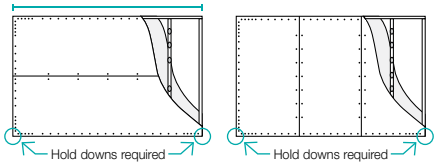

Horizontal Fixing | Vertical Fixing

For sheet substitution options refer to p. 14.

5.1.3 Bottom Plate Fixing

Bottom Plate Fixings for GIB® Bracing Elements

Brace Type	Concrete Slabs		Timber Floors
	External Walls	Internal Walls	External and Internal Walls
GS1-N	As per NZS 3604:2011 No specific additional fastening required	As per NZS 3604:2011 Alternatively use 75 x 3.8mm shot-fired fasteners with 16mm discs, 150mm and 300mm from each end of the bracing element and at 600mm thereafter.	Pairs of 100 x 3.75mm flat head hand driven nails or 3/90 x 3.15mm power driven nails at 600mm centres in accordance with NZS 3604:2011
GS2-N **GS2-NOM**	Not applicable		
GSP-H **BL1-H** **BLP-H**	Intermediate fastenings to comply with NZS 3604:2011 In addition: GIB HandiBrac® fixings or metal wrap-around strap fixings and bolt as illustrated on p. 63–64		Pairs of 100 x 3.75mm flat head hand driven nails or 3/90 x 3.15mm power driven nails at 600mm centres in accordance with NZS 3604:2011 In addition: GIB HandiBrac® fixings or metal wrap-around strap fixings and bolt as illustrated below
BLG-H	Not applicable	As for GSP-H, BL1-H, BLP-H on concrete slab as illustrated on p. 63 & 64	

5.1.4 Panel Hold-Down Details

GIB HandiBrac® – Recommended Method

Developed in conjunction with MiTek™ NZ, the GIB HandiBrac® has been designed and tested for use as a hold-down in GIB® BL and GSP bracing elements.

- The GIB HandiBrac® registered design provides for quick and easy installation
- The GIB HandiBrac® provides a flush surface for the wall linings because it is fitted inside the framing. There is no need to check into the framing as recommended with conventional straps
- The GIB HandiBrac® is suitable for both new and retrofit construction
- The design also allows for installation and inspection at any stage prior to fitting internal linings

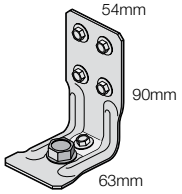

Concrete Floors		Timber Floors	
External Walls	**Internal Walls**	**External Walls**	**Internal Walls**
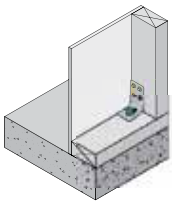	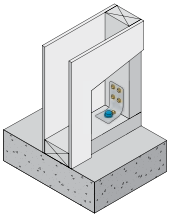	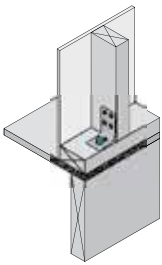	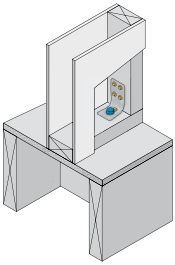
Position GIB HandiBrac® as close as practicable to the internal edge of the bottom plate	Position GIB HandiBrac® at the stud / plate junction	Position GIB HandiBrac® in the centre of the perimeter boundary joist	Position GIB HandiBrac® in the centre of floor joist or full depth solid block

Hold-Down Fastener Requirements

A mechanical fastening with a minimum characteristic uplift capacity of 15kN or use supplied BT 10/140 screw bolt in GIB HandiBrac® pack.	12 x 150mm galvanised coach screw or use supplied BT 10/140 screw bolt in GIB HandiBrac® pack.

Bracing Strap Installation

Care needs to be taken with the installation of the bracing strap. It should be checked in to be flush with the face of the stud providing a flat substrate for the plasterboard. It should be positioned in such a way that the important corner fastenings of the bracing element are not affected by it. Keeping the strap to the edge of the end stud as shown will allow the important corner fastenings to be installed without having to penetrate the bracing strap.

Concrete Floors	Timber Floors
400 x 25 x 0.9mm galvanised strap to pass under the plate and up the other side of the stud. Six 30 x 2.5 flat head galvanised nails to each side of the stud. Three 30 x 2.5 flat head galvanised nails to each side of the plate. Hold down bolt with 50 x 50 x 3mm washer to be fitted within 80mm of the edge of the element.	

Internal Walls	External Walls	Internal Walls	External Walls
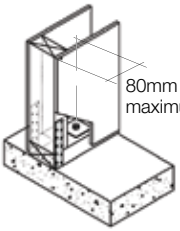	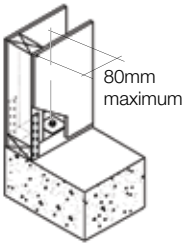	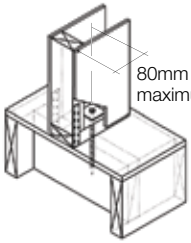	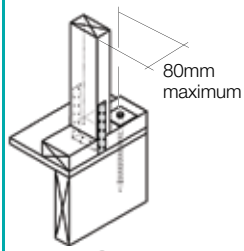 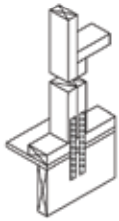 2/300 x 25 x 0.9mm galvanised straps with six 30 x 2.5mm flat head galvanised nails to each stud and into the floor joist and three nails to the plate. Block to nog fixed with 3/100 x 3.75mm nails to stud.

Hold-Down Fastener Requirements

Concrete Floors	Timber Floors
A mechanical fastening with a minimum characteristic uplift capacity of 15kN fitted with a 50 x 50 x 3mm square washer within 80mm of the ends of the bracing element.	12 x 150mm galvanised coach screw fitted with a 50 x 50 x 3mm square washer within 80mm of the ends of the bracing element.

5.1.5 GIB EzyBrace® Corner Fastener Pattern

Corner Fastener Pattern for ALL 4 CORNERS OF GIB® Bracing Elements (excluding GS2-NOM).

- All four corners of a GIB® plasterboard bracing element must be fastened as per the fastening patterns shown below
- Bracing element perimeter is then fastened at 150mm centres, or for GS2-NOM 300mm centres
- Fasteners must be no closer than 12mm from the paper enclosed edge and no closer than 18mm from sheet ends or cut edges of sheets

GIB EzyBrace® Corner Fastener Pattern

Unless specified all fastener spacings are maximums.

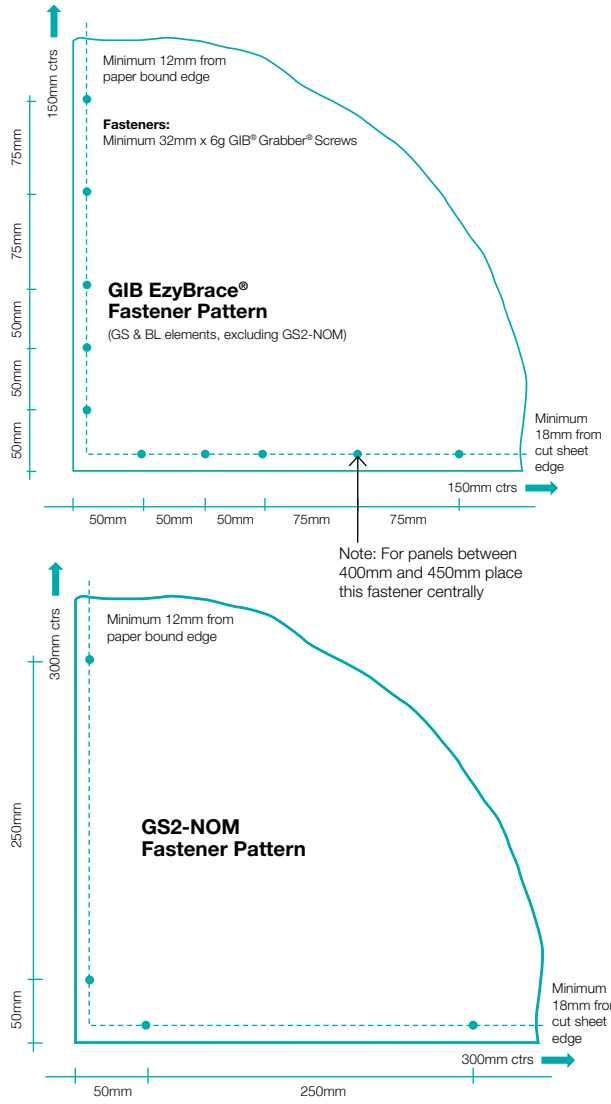

5.1.6 Permitted GIB EzyBrace® Plasterboard Substitutions

Refer to p. 14 for GIB® plasterboard substitutions in GIB EzyBrace® systems

5.1.7 General Installation Details

- Timber framing to comply with NZS 3604:2011
- Minimum stud dimensions:
  - External walls – 90 x 35mm
  - Internal walls – 70 x 45mm
- Use full sheets where possible
- If part sheets are required a minimum dimension of 300mm applies for all bracing elements
- All joints and fastener heads in GIB EzyBrace® Systems must be stopped. GIB® tape must be used in joints

Bracing in Wet Areas

GIB EzyBrace® Systems are not to be installed inside shower cubicles or around baths.

Outside of these areas it is acceptable to use GIB EzyBrace® Systems in bathrooms and other wet areas provided that the surface of the element is maintained impervious for the life of the building.

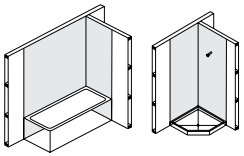

No bracing in shaded areas

Small Openings in Bracing Elements

Small openings (e.g. power outlets) of 90 x 90mm maximum or circular holes no more than 100mm may be placed no closer than 90mm to the edge of the braced element. A block may need to be provided alongside the perimeter stud as shown below.

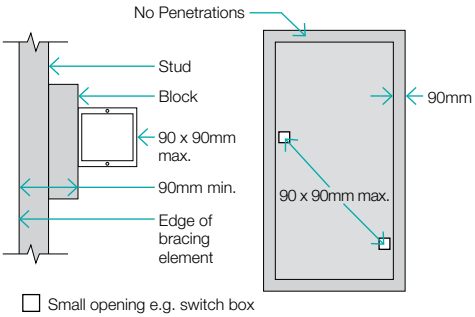

Large Openings in Bracing Elements

For openings above 90 x 90mm such as switch boards, recessed cabinets and TV's etc. should be placed outside of the bracing element or locate the bracing element on the other side of the wall framing.

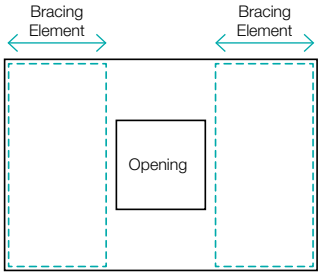

Intersecting Walls

GIB® Bracing Elements may have intersecting walls with a minimum length of 200mm. Fasteners are required around the perimeter of the bracing element. Vertical joints at T-junctions shall be fixed and jointed as specified for intermediate sheet joints. The bracing element length must be no less than 900mm.

Where a Wall Bracing Element is interrupted by a T-junction the element is deemed to be continuous for the whole length (900mm minimum in the example illustrated).

When fixing part sheets of GIB® plasterboard to the side of a T-junction, a minimum width of 300mm applies for bracing elements. See figures on p. 67.

5.1.7 General Installation Details

Intersecting Walls

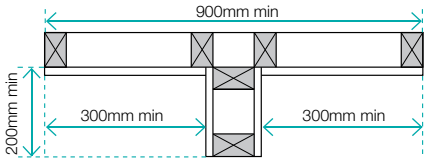

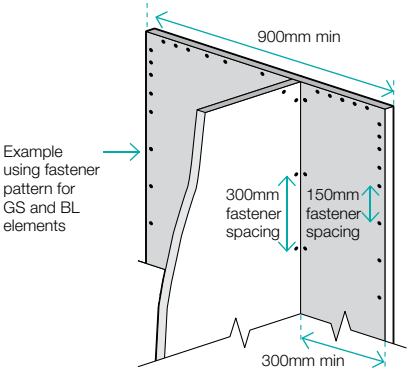

Junction
Minimum 32mm x 6g GIB® Grabber® High Thread or 32mm x 7g GIB® Grabber® Dual Thread Screws at 300mm centres each side

Top Plate Connections

For top plate connection refer to NZS3604:2011 section 8.7.3.

Parapets and Gable End Walls

Bracing elements must be fixed from top plate to bottom plate. Fixing to a row of nogs is not acceptable unless either:

A continuous member such as an 90 x 45mm ribbon plate is fixed across the studs just above a row of nogs at the ceiling line;

OR

GIBFix® Angle is installed as shown. The angle is fixed to a row of nogs with 30 x 2.5mm galvanised flat head nails at 300mm centres.

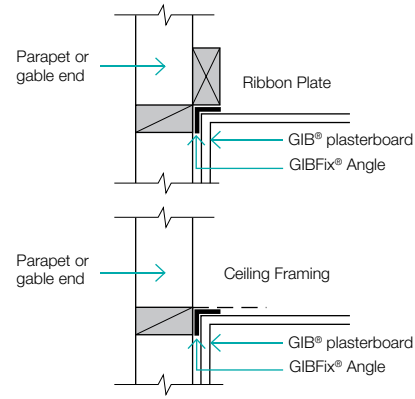

Screw and Adhesive Fix for Openings - GS2-NOM Only

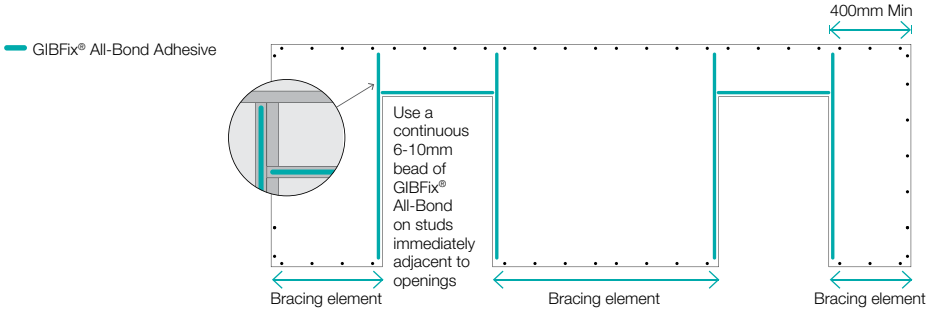

5.1.8 Ceiling Diaphragms

Ceiling diaphragms do not have a bracing unit rating but are used when bracing lines are spaced further than 6.0m apart.

Any 10mm or 13mm GIB® plasterboard can be used for ceiling diaphragms.

Ceiling Diaphragms

Small Openings
Small opening (e.g. down lights) of 90 x 90mm or less may be placed no closer than 90mm to the edge of the ceiling diaphragm.

Large Openings
Openings are allowed within the middle third of the diaphragms length and width. Fixing of sheet material to opening trimmers shall be at 150mm centres. Neither opening dimension shall exceed a third of the diaphragm width. Larger openings or openings in other locations require specific engineering design.

Where fireplace flue or range hood openings are required in a ceiling diaphragm the use of a galvanised metal backing plate is recommended, with a maximum hole diameter of 350mm.

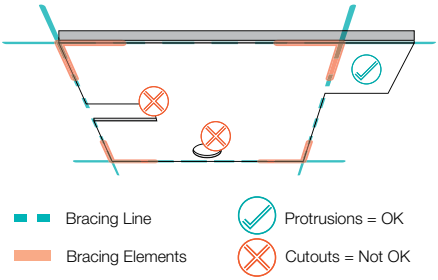

Use full width sheets where possible.

Minimum length sheet – 1.8m

Minimum width sheet – 900mm

Sheets less than 900mm in width but no less than 600mm may be used provided that the sheet edge joint is fully back blocked.

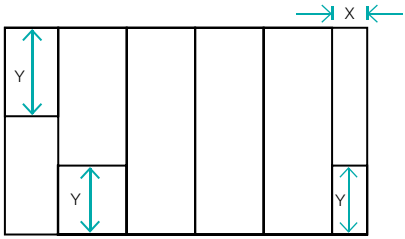

X = 900mm min or 600-900mm min provided all adjacent joints are back-blocked

Y = 1800mm min sheet lengths at ends of ceiling diaphragms

Ceiling diaphragms may be constructed using any GIB® plasterboard provided perimeter fixing is at;

150mm centres for: Diaphragms up to 7.5m in length, no steeper than 15°.

100mm centres for: Diaphragms up to 7.5m in length, no steeper than 45°. Diaphragms up to 12m in length, no steeper than 25°.

Diaphragms outside these parameters must be specifically designed.

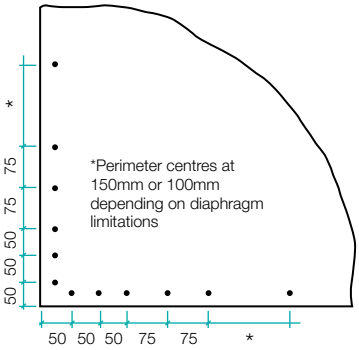

All fastener spacings are maximums

5.1.8 Ceiling Diaphragms

Ceiling Diaphragms

GIB® Rondo® 310 metal ceiling battens may be used if fixed directly through the flanges into the ceiling framing using 2/32mm x 8g wafer head screws.

If the 310 ceiling battens are required to be clip fixed, a block or continuous timber member must be securely attached to the ceiling framing at the level of the back of the metal batten. The batten is then fastened to this timber as shown.

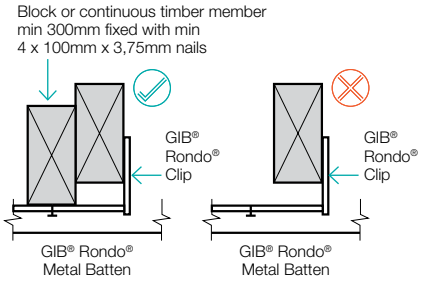

For steel battens a continuous channel or angle is required to the perimeter of the diaphragm.

This shall be fastened to the framing with GIB® Grabber® 32mm x 8g wafer head screws at 300mm centres.

Battens shall be fixed to the channel with 32 x 8g GIB® Grabber® wafer head screws.

It is important that a positive connection is created between the top plate and the ceiling substrate.

Coved ceiling diaphragms can be achieved by attaching a folded metal angle to the junctions.

- Minimum .55mm BMT with 100mm each leg
- Fastened at 300mm centres on each edge using 32mm x 6g GIB® wafer head screws

Linings shall be fixed to both sides of the metal angle at 150mm or 100mm centres with minimum 25mm x 6g GIB® Grabber® self-tapping screws

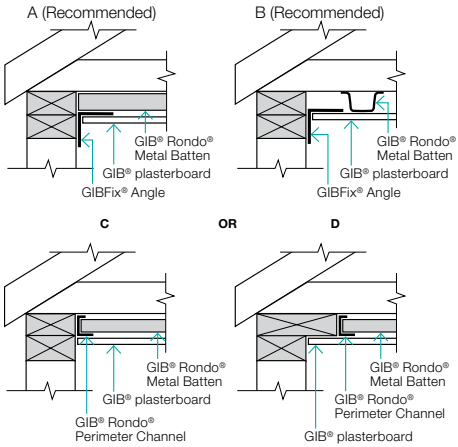

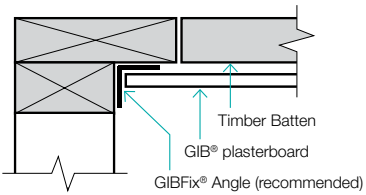

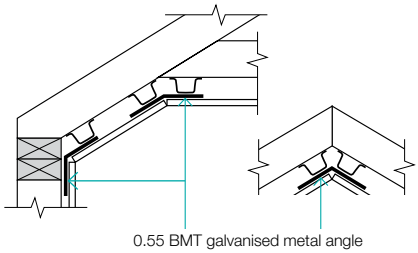

General installation

- Sheet end butt joints must be formed off framing and back-blocked (see p. 47)
- Framing and ceiling batten requirements for ceiling diaphragms are the same as for general ceiling installation (see p. 45)
- The body of the ceiling shall be fixed as per general ceiling installation (see p. 45)
- Openings and penetrations in ceiling diaphragms are as for wall bracing (see p. 66)
- Linings shall be installed over the entire area of the diaphragm
- Joints and fastener heads must be stopped. GIB® tape must be used in joints

5.2 GIB AQUALINE® WET AREA SYSTEMS

This section covers the installation of GIB Aqualine® Wet Area Systems. Full information can be found in the GIB Aqualine® Wet Area Systems literature.

GIB Aqualine®

GIB Aqualine®, with its green face paper, has a water resistant core which will provide resistance to the effects of moisture in wet areas such as bathrooms and laundries.

Although able to cope with infrequent short-term exposure, standard gypsum plasterboard will have a shortened life expectancy when frequently exposed to water or moisture.

The NZBC does not call for water resistant linings in wet areas but it is highly desirable to incorporate lining materials which will maintain their integrity longer when exposed more frequently to water or steam and particularly to one-off events such as leakages or flooding of a room.

Limitations

- Do not use GIB Aqualine® in situations where it is exposed for extended periods to humidities of 90% RH or greater. Such areas include group shower rooms, as well as moisture and chlorine laden environments such as indoor heated swimming pools
- GIB Aqualine® must not be installed in exterior situations
- GIB Aqualine® must not be directly applied to solid plaster (gypsum or cement) wood based sheet linings or similar materials, masonry or concrete. GIB Aqualine® may only be applied to these materials where timber strapping or steel furring channels are installed
- GIB Aqualine® must not be installed over a vapour barrier or a wall acting as a vapour barrier
- GIB Aqualine® must not be used for bracing purposes in shower cubicles or over baths

NZBC Clauses E3 Internal Moisture

E3.3.4 requires impervious and easily cleaned surfaces to all surfaces adjacent to sanitary fixtures or laundering facilities.

E3.3.5 requires that surfaces of building elements likely to be splashed or contaminated in the course of the intended use of the building, must also be impervious and easily cleaned.

E3.3.6 requires that surfaces of building elements likely to be splashed must be constructed in a way that prevents water from penetrating behind linings or into concealed spaces (e.g. wall cavities).

Walls in wet areas therefore need to be addressed according to whether they fall within the scope of one of the following descriptions:

1. Wall surface likely to be splashed
2. Wall surfaces directly exposed to water e.g. shower walls

Although not a requirement of NZBC it is highly recommended that the wall surfaces within 150mm of the top edge of a bath, and the vertical faces immediately under the edge of a bath, are treated in the same way as for a shower wall.

5.2.1 Surface in Showers and Around Baths

A waterproof membrane complying with AS/NZS 4858 MUST be applied to all lining materials used under ceramic tiles in these areas.

The waterproof membrane must extend to a 1500mm horizontal radius from a shower rose unless the shower is contained within a fixed enclosure. A shower curtain does not constitute a fixed enclosure.

Particleboard flooring manufacturers recommend that in wet areas, panels should be protected with a suitable wet area membrane or an integrally waterproof sheet material. Some local authorities call for this treatment on all timber based floors. Local requirements should be checked before proceeding.

Dark grey shaded areas in the diagrams below represent the minimum extent of wall surfaces requiring impervious sheet materials or waterproof membranes prior to tiling. Light grey shaded areas represent best practice.

Enclosed shower over bath

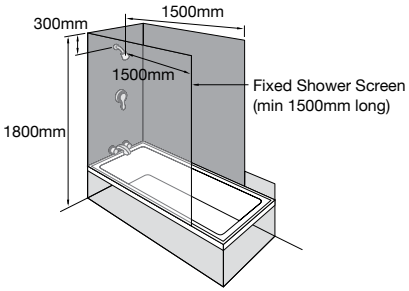

Unenclosed shower over bath

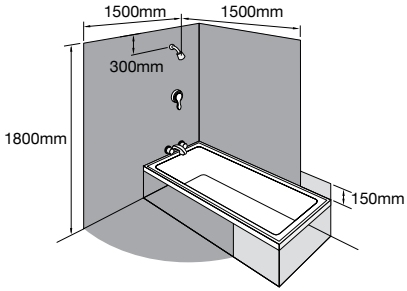

Enclosed Shower

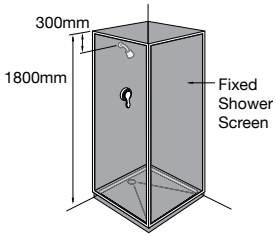

Unenclosed shower

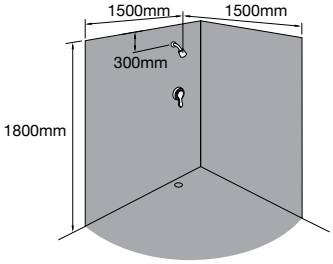

Bath

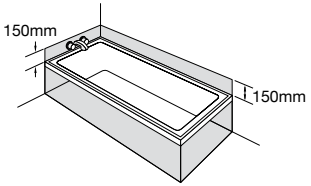

Code requirements

Best practice

5.2.2 Fixing Details for Non Tiled Walls

As for general installation details (see p. 38–41)

Ceilings

Battens or ceiling joists shall be spaced at 450mm centres maximum for 10mm GIB Aqualine® and 600mm centres maximum for 13mm GIB Aqualine®.

Ceiling Fixing

Fixing as for GIB® Standard plasterboard (see p. 45)

Jointing

All sheet joints must be GIB® tape reinforced and stopped in accordance with instructions on p. 83.

5.2.3 Fixing Details for Tiled Walls

Wall Framing

Timber Framing dimensions and spacings must comply with the requirements of NZS 3604:2011.

Prior to lining in tiled areas (shower cubicles and shower over bath only) the internal corners shall be reinforced with a minimum 32mm x 32mm angle such as NZ18 or GIBFix® Angle. Each side of the angle shall be fastened to the framing with 30mm galvanised clouts at 300mm centres (see p. 74).

Steel stud systems are proprietary but do not generally incorporate nogs except as required below:

- Adjacent to each pipe penetration and behind sink and tub flashings
- Between all studs above bath flanges and preformed shower bases
- To support towel rails, grab rails and wall basin brackets
- For impact protection in shower cubicles or shower over bath situations it is important that all sheet joints are made on solid blocking. This may either require vertical fixing of the GIB Aqualine® or the installation of some additional nogs

Lining and Tile Weights

- 10mm or 13mm GIB Aqualine® is recommended for use on timber or steel framing and for tile weights up to 20kg/m^2
- 13mm GIB Aqualine® must be used for tile weights between 20 and 32kg/m^2 and when steel framing has been used
- GIB® Grabber® Drywall Screws at 100mm centres to perimeter of tiled wall and to all intermediate studs
- For 10mm GIB Aqualine® use minimum 25mm x 6g GIB® Grabber® Drywall Screws
- For 13mm GIB Aqualine® use minimum 32mm x 6g GIB® Grabber® Drywall Screws
- GIB Aqualine® may be fixed vertically or horizontally
- Provide a 5mm–10mm gap at the wall/floor junction
- Provide a 5mm–10mm gap between the bottom edge of the GIB Aqualine® and any bath rim or preformed shower base to allow for placement of sealant
- GIB Aqualine® sheets shall be touch fitted
- Where the framing or fastener centres required for tiled GIB Aqualine® are closer than those specified for GIB® Fire Rated and GIB Noise Control® Systems, the GIB Aqualine® specification shall prevail. Where relevant check fastener lengths comply with requirements of GIB® Fire Rated Systems
- Do not fix tiles to GIB® plasterboard ceilings or non-vertical planes

Jointing

- Jointing shall be carried out in accordance with instructions on p. 85
- No joint compound is required under impervious shower linings
- Air drying compounds shall not be used on areas that are to be tiled

Fastening the Linings – Horizontal Fixing in Tiled Areas

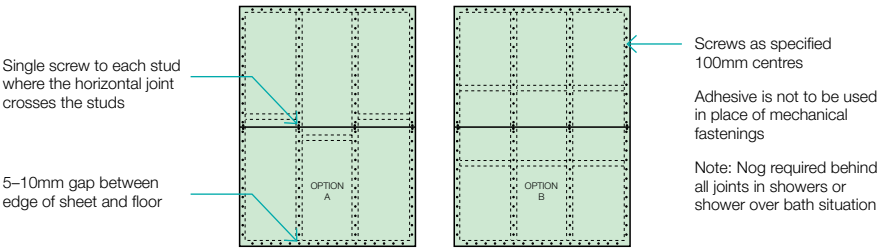

5.2.4 Tiling, Flexible Sheet Vinyl and Rigid Sheet Shower Linings

Tiling

- Tile grouting and sealing shall be carried out in accordance with the requirements of AS3958.1 2007 (Guide to the Installation of Ceramic Tiles)
- Provide for surface control joints at 4m centres maximum
- The adhesive shall be organic based complying with AS2358 – 1990 (Adhesives for Fixing Ceramic Tiles)
- Note that the adhesive should be combed in a horizontal direction only. It is important that adhesive is applied to the wall and not "buttered" onto individual tiles

Flexible Sheet Vinyl – Showers and Other Wet Areas

- GIB Aqualine® is a suitable substrate for flexible vinyl wall finishes in wet areas of residential, commercial or institutional buildings
- Framing requirements and installation procedures for the GIB Aqualine® substrate shall be as per p. 72, except that the lining gap at the floor is reduced to 5mm when a pencil cove detail is used
- The installation of metal reinforcing angles (minimum. 32 x 32 x 0.55mm) behind internal GIB Aqualine® corners is recommended for sheet vinyl applications in showers or shower over bath situations (see illustration p. 74)
- The GIB Aqualine® lining must be jointed and stopped to a paint quality finish (Level 4) – trowel marks can telegraph through even a commercial grade 2mm vinyl
- A minimum vinyl thickness of 2mm is recommended for the wall finish in commercial or institutional bathrooms and showers
- In areas directly exposed to liquid water, all joints in flexible sheet vinyl must be heat welded
- Installation of the flexible vinyl must be carried out strictly in accordance with the specifications provided by the suppliers/ manufacturers of the vinyl

Rigid Sheet Shower Linings

- The manufacturers/suppliers of thin (usually 2mm–3mm) and rigid acrylic shower linings commonly recommend direct adhesive fixing to wall linings using solvent-based adhesives
- Do not pre-seal areas which are to be covered by the rigid shower linings
- Some suppliers of rigid sheet acrylic shower linings recommend a minimum of one week for the adhesive to cure fully prior to use
- Water temperature changes will cause movement of the thin acrylic sheet, which in turn will stress the adhesive and wall lining substrate
- Care must be taken to ensure that rooms are adequately ventilated and the adhesive is fully cured before the shower is used
- Consult the manufacturer/supplier of the shower lining for full installation details

Waterproof Membranes (tiled shower areas and shower over baths)

- In showers and shower over bath situations the GIB Aqualine® system is not complete and ready for tiling until coated with a waterproof membrane over the lining and the jointed areas
- Only in-situ waterproofing materials which are manufactured to AS/NZS 4858:2004 Wet Area Membranes Requirements are recommended.
- Waterproof membranes must be fully cured and dry prior to application of tiling adhesives
- Embed reinforcing mats in the membrane at all internal corners of the shower (including floor/wall junctions)

For further information on waterproof membranes prior to tiling, consult BRANZ GOOD PRACTICE GUIDE TILING.

5.2.5 Typical Construction Details

FIG. B: Typical Details for Tiled Shower over Bath

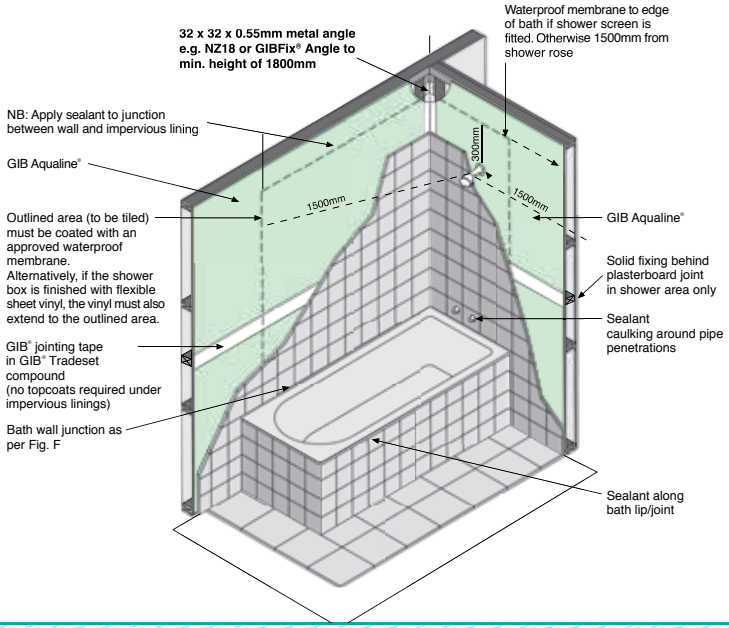

FIG. C: Typical Details for Tiled Shower Enclosure

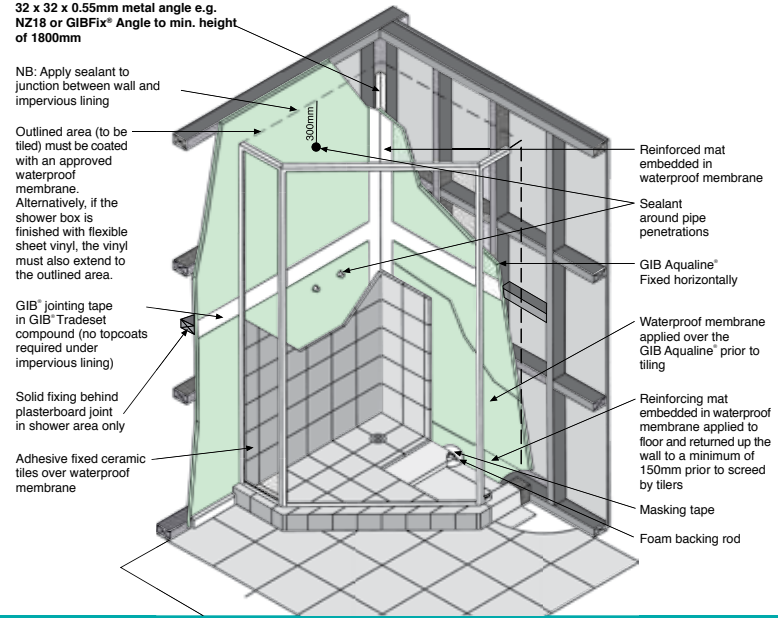

5.2.5 Typical Construction Details

FIG. D: Typical shower edge detail

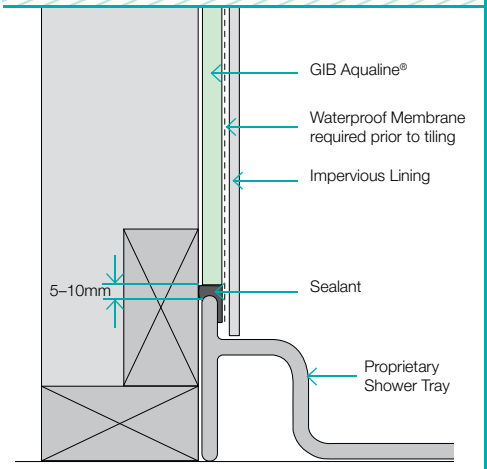

FIG. E: Typical shower edge detail in fire or noise control area

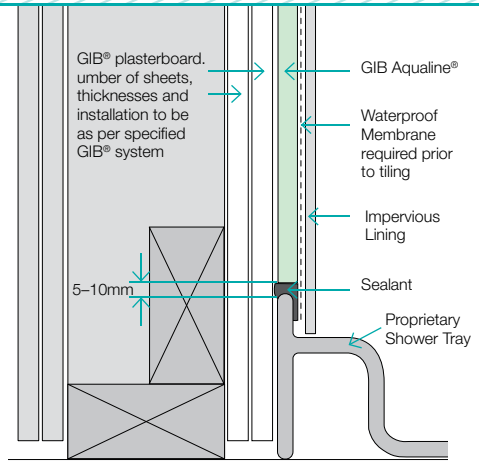

FIG. F: Typical bath edge detail

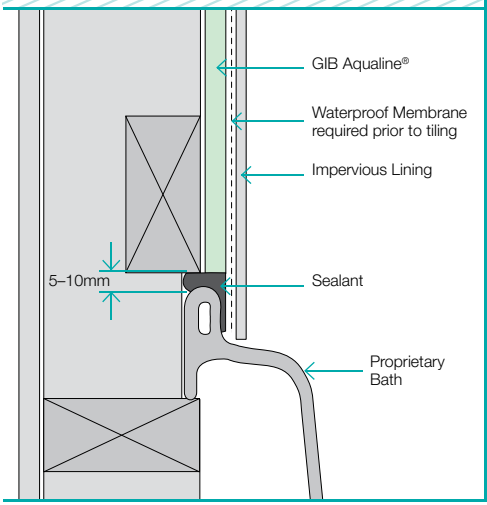

FIG. G: Typical bath edge detail in fire or noise control area

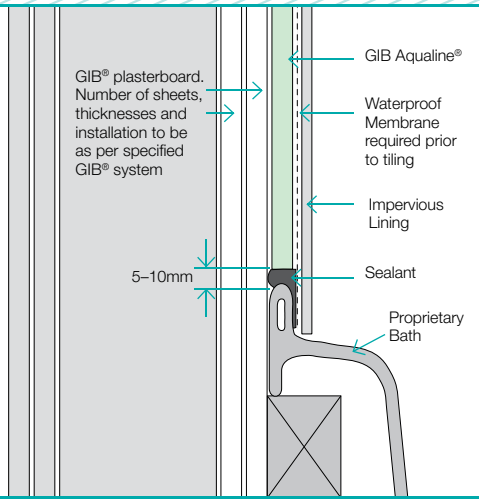

As the edge profiles of showers and baths can vary significantly between manufacturers, these details are intended only as a guide. Attention should be paid to ensure that:

- Sufficient sealant to effect a waterproof barrier has been used
- The sealant has been applied in a manner that does not permit water ingress

Note: The gap between the front face of the shower/bath upstand and the front face of the GIB Aqualine® should be 1mm–4mm. This may require additional packing behind final layer of GIB Aqualine® OR checking shower tray or bath into framing.

Silicone sealants must be of the mould inhibiting type and must be compatible with GIB Aqualine®, shower/bath surfaces and the impervious lining.

5.2.5 Typical Construction Details

It is recommended that GIB Aqualine® is fixed to ceilings in wet areas such as bathrooms and laundries. Installation is the same as for standard ceiling. See p. 45.

FIG. H: Typical Plumbing Penetration

Penetrations in wet areas should be sealed with silicon sealant to prevent moisture access to the framing.

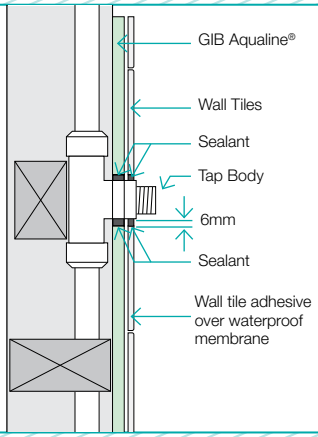

FIG. I: Sealing Under Mixer Facia

Apply a bead of sealant behind the cover plate on shower mixer to divert any water from the penetration.

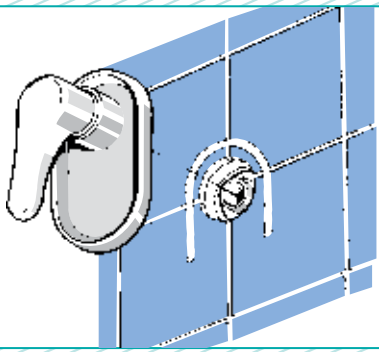

FIG. J: Tiled Shower – Internal Corner Detail

Edge profiles of baths and shower trays can vary significantly between manufacturers. Always follow the manufacturers installation instructions.

The details shown are intended as a guide only.

Allow 5mm–10mm gap between bath rim and/or shower base to allow for installation of sealant.

Sealants should contain a mould inhibitor.

Ensure that the gap is well filled with sealant.

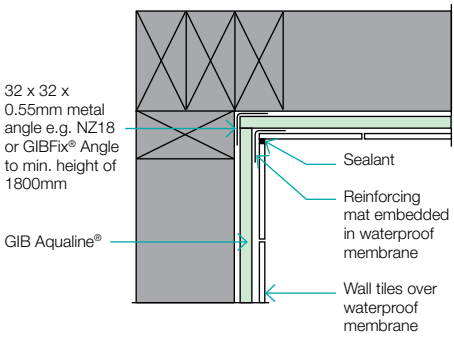

5.3 GIB® FIRE, NOISE AND OTHER PERFORMANCE SYSTEMS

Because of the volume of information it is not feasible to include installation guidance for all the GIB® Performance Systems in the GIB® Site Guide. If you are installing GIB® Performance Systems including GIB® Fire, Noise, Tough or Intertenancy systems it is strongly recommended that you obtain a copy of the relevant specification and installation publication prior to commencing installation.

These can be easily accessed by:

- Download from gib.co.nz
- Download the GIB® App available free from the App or Google Play Stores
- Contact the GIB® Helpline on 0800 100 442
- Or from most GIB® plasterboard stockists

5.3.1 GIB® Fire Rated Systems

The NZBC requires fire safety systems to reduce the risk of injury or death, and to protect adjacent property in a fire situation.

Fire rated systems require attention to the details in the GIB® Fire Rated Systems literature.

Deviating from these specifications can invalidate the system leading to expensive remedial work to comply or increased risk in case of fire.

A fire system is NOT simply a matter of fixing GIB Fyreline® instead of another GIB® plasterboard.

The fire resistance rating can only be assured when the board has been installed strictly in accordance with the relevant instructions in the GIB® Fire Rated Systems literature.

5.3.2 GIB Noise Control® Systems

Noise control for Intertenancy situations is comprehensively covered in GIB Noise Control® Systems literature. As these situations are generally subject to building code requirements it is important that the publication is consulted to design and construct Intertenancy noise control systems.

Sound Transmission Class (STC)
STC relates to airborne noise such as speech, TV and so on. It is the ability of a wall, ceiling, or floor/ceiling to reduce noise from rooms next door. In general a higher STC means a better performance.

STC 35 – Normal speech may be clearly heard in the next room

STC 45 – Muffled speech may be heard in the next room

STC 55 – Minimum building code requirement for intertenancy walls

Impact Insulation Class (IIC)
IIC measures the ability of a floor or ceiling system to reduce noise resulting from impacts such as footsteps, falling objects and moving furniture. A higher IIC means a better performance. Impact noises easily travel from hard surfaces into the structure and to the room below. Hard surfaces such as finished timber floors and ceramic tiles often cause noise transmission to the room below. Semi-hard surfaces such as cork tiles and flooring grade vinyl perform a little better, but still do not efficiently absorb impact energy. Installing carpet and underlay is an effective way of reducing impact noise. Installing a GIB Noise Control® System will help reduce impact and airborne noise levels.

Substitution
GIB Noise Control® Systems are not generic. It is important that only GIB® branded components are used when specifying and installing GIB Noise Control® Systems. Substitution is not in accordance with GIB® Systems recommendations and is at the risk of the owner, specifier or builder.

6.0 JOINTING AND FINISHING SYSTEMS

Jointing and finishing of GIB® plasterboard is to be as per instructions to meet requirements of AS/NZS 2589:2017.

This section covers the basics of joint construction and finishing.

For details on the full GIB® compound and accessory range refer to p. 19–24.

Note: The use of correct GIB® materials and practices is critical to delivering adequate joint strength and resistance to cracking which in turn contributes to the performance of GIB® plasterboard bracing systems.

6.1 JOINTING – MATERIALS

GIB® Jointing Tapes

GIB® Paper Tape provides reinforcing and resistance to joint cracking. It is pre-creased for use in internal corners. The rougher side of the tape must face the wall surface when bedded in to the jointing compound.

GIB RocTape® is a fibreglass mesh tape suitable for flat joints.

Jointing Compounds.
There are two general types of jointing compound:

Plaster Based (Setting Compounds)

These compounds are powders based on plaster of paris. They have a specific working time before they start to set and harden when mixed with water in the recommended ratio.

Once the set time is reached, the product begins to harden as a result of chemical reaction between the plaster with water.

Plaster based compounds are mixed on site, enabling viscosity to be adjusted as it's mixed so that it's suitable for the chosen application method.

Product examples: GIB Tradeset® range (different set times), GIB Lite Blue® and GIB MaxSet®. Refer to p. 19–21 for details.

Air Drying Compounds

These compounds are pre-mixed pastes and are ready to use direct from their pails. They do not set but rather rely on evaporation of water to enable their polymer binder to cure.

These products are generally formulated to be softer and easier to sand, so are normally used for the third or top coat. Some air drying compounds are designed as multi-purpose so they can be used for all three coats. Please consult p. 19–21 before using a three-coat air drying compound system.

GIB® Jointing Tapes



Plaster Based Jointing Compounds



Air Drying Jointing Compounds



Product examples: GIB Trade Finish® range (Heavy Weight, Multi, Lite and Extra Lite), GIB Plus 4® or GIB Redifilla® range.

Refer to p. 19–21 for details of each compound's performance.

6.2 DETERMINING HOW MUCH YOU NEED

The table below gives the approximate usage rates for some joint compounds. These figures are approximate and will vary depending on wastage and the actual thickness at which the product is applied.

APPROXIMATE COVERAGE OF JOINT COMPOUNDS

Coverage in lineal metres per package size	
2 coats (taping plus second coat)	
GIB Tradeset®	200m (per 20kg bag)
GIB MaxSet®	260m (per 20kg bag)
GIB X-Block®	90m (per 25kg bag)
Second coat only	
GIB Lite Blue®	330m (per 17.5kg bag)
Top coat only	
GIB Plus 4®	75m (per 15L pail)
GIB Trade Finish® Heavy	70m (per 15L pail)
GIB Trade Finish® Multi	75m (per 15L pail)
GIB Trade Finish® Lite	75m (per 15L pail)
GIB Trade Finish® Extra Lite	75m (per 15L pail)
GIB® U-Mix Finishing Compound	375m (per 20kg bag)
All three coats (taping plus two coats)	
GIB Plus 4®	50m (per 15L pail)
GIB Trade Finish® Multi	50m (per 15L pail)
GIB Trade Finish® Lite	50m (per 15L pail)
GIB Trade Finish® Extra Lite	50m (per 15L pail)

*Skim coat at 1mm thick yields approximately 10m^2 per kg.

Note: These are estimated quantities, and can vary significantly due to site conditions and fixing practices. They are intended as a rough guide and should not be used for quoting purposes.

6.3 WEATHER AND VENTILATION

Weather Conditions

Understanding the part that weather conditions play in joint construction is critical for the creation of trouble free joints.

Cool Weather

In cool weather the rate of drying drops dramatically so achieving a dry coating in a commercially acceptable time becomes an issue. Under these conditions a thick coating of air drying compound also results in longer drying times, so most stoppers use a setting compound for the first and second coats followed by a thin top coat of an air drying compound.

As the overall amount of drying is diminished under cool weather conditions, it is wise to use a harder sanding finishing compound such as GIB Trade Finish® Multi, or GIB Trade Finish® Heavy which will sand with less risk of scratching or “swirling”.

In cold weather, issues such as partial freezing of the mixing water can result in poor feathered edge adhesion. Do not use below the minimum temperature stated on the bag or pail. The biggest issue here is the speed of drying of plaster. If it has not dried before the next coat is applied, it will shrink, and the result can be delayed shrinkage and hollow joints.

To minimise the above issues, the building needs a source of heating. One option is placement of one 2kW fan heater every 50m^2 of floor area. This will create slight air movement and take the chill off the air, thereby creating conditions more favourable to drying at a reasonable rate. These provide a gentle uniform heating effect. Always check with the main building contractor before doing this. Check the heater has a thermal overload and always remove all possible sources of combustion (bits of paper etc.) before using.

Try to avoid going above 18–20ºC in any individual room in the building. Rapid drying through excessive heat can cause popping or movement of fasteners and joints.

Note: It is not a good idea to use air drying compounds for all coats in winter in an unheated building. Shrinkage will result if each coat has not dried properly, and the ability to dry in a reasonable time is significantly diminished in this situation.

Hot Weather

This may be defined as ‘any part of the job and/or the air around the area of stopping with a temperature at, or above, 25ºC’.

In these conditions we recommend the use of GIB Tradeset® 90 or shorter set products such as GIB Tradeset® 45. Air drying compounds tend to be good in hot weather and dry out reasonably quickly.

Rooms that heat up to this extent during the morning should be taped in early so that the compound has a chance to fully set.

Digital thermometers are readily available at hardware stores, to accurately measure surface and air temperatures on site for more informed decision making.

Ventilation and Air Drying

Winstone Wallboards recommends:

- At least one window be opened at either end of the building. Even in wet weather this will allow airchanges and some drying throughout the building. The exception to this would be fog and continual rain. In colder weather these air changes are even more critical as the air carries less moisture
- If the building is locked shut with no air movement the air will dry the joints until such time it has reached 100% humidity and then the drying process will stop

Examples of Relative Humidity (RH) in New Zealand Homes				
Averages				
Average ambient humidity (approx.)		=	70% RH	
At 70% RH the moisture air can carry		=	30% moisture	
Air temp	RH		Moisture air can carry	
10ºC	70%	=	2.7g /m^3	
20ºC	70%	=	5.1g /m^3	
Typical house example				
Floor Area		=	190m^2	
Cubic volume		=	450m^3 (approx.)	
Plaster used on house (approx.)		=	100kg	
Water required to mix plaster (approx.)		=	66ltrs	
Water naturally retained in plaster (approx.)		=	10ltrs	
Water to be evaporated from plaster (approx.)		=	56ltrs	
Example #1 – House temp 10C and RH 70%				
House volume multiplied by 450m^3 x 2.7g/m^3		=	1.21kg	
Moisture the air can carry		=	At 10ºC/ 70% RH the maximum moisture the air inside this house can hold is 1.21kg	
Example #2 – House temp 20C and RH 70%				
House volume multiplied by 450m^3 x 5.1g/m		=	2.30kg	
Moisture the air can carry		=	At 20ºC/ 70% RH the maximum moisture the air inside this house can hold is 2.30kg	
Conclusion				
At 20ºC / 70%RH it will take 24 complete air changes to remove the 56ltrs of moisture in this house. However at 10ºC / 70%RH it will take even longer requiring 46 complete air changes.				

Setting Compounds

Plaster based compounds are generally used for the base and the second coats of a plasterboard jointing system.

When the setting compound is mixed with water it forms a paste which can be trowelled to form smooth flat joints and which subsequently sets hard.

Plaster requires a specific amount of water to fully set. In hot weather the mixed compound can dry and the water content can drop below this amount before it starts to set. The longer the compound's set time, the more likely it can dry too much before it sets. When dry, the end result can be a "soft" or "weak" bedding compound, poor tape adhesion and poor resistance to cracking.

Air Drying

To provide better plasterboard surface finish quality, sandable air drying compounds are used as the top coat on jointing systems. Some air drying compounds such as GIB Plus 4® are designed as multi-purpose and can be used for each coat in the entire joint system.

Air drying compounds contain powdered mineral fillers held together with a polymer binder (or glue) in a water emulsion. After applying air drying compound to a plasterboard surface, the water needs to evaporate to create a solid mass. This hardening, unlike setting compounds, is directly related to the speed (and temperature) at which the compound dries out. In winter with poor drying conditions, these products can take a very

long time to thoroughly dry to a point where they are sandable. If it has not dried in total before painting, the product can shrink.

A minimum temperature is also required in order to form a film to bind the compound together. In most cases the minimum air and compound temperature for satisfactory application and performance of air drying compounds is 10°C.

If the compound dries below this minimum temperature, the end result is likely to be a much softer compound, that scratches readily when sanded, has poor adhesion to underlying compounds and poor paint adhesion properties.

Approximate Drying Times for Air Drying and Setting Compounds

Relative Humidity	Temperature				
	10˚ C	16˚ C	21˚ C	27˚ C	32˚ C
98%	26 days	18 days	12 days	9 days	6 days
94%	10 days	7 days	5 days	3 days	2 days
90%	6 days	4 days	3 days	49 hrs	36 hrs
80%	3 days	2 days	38 hrs	27 hrs	19 hrs
60%	42 hrs	29 hrs	20 hrs	14 hrs	10 hrs
40%	29 hrs	20 hrs	14 hrs	10 hrs	7 hrs

Indicates common weather conditions in New Zealand.
Based on 1.5mm–2mm thickness of wet compound.

Drying And Shrinkage

At the time of usage all jointing compounds will contain water. As the excess water evaporates from the compound, varying degrees of shrinkage occurs depending on the type of compound.

Shrinkage is one of the more common failures seen and is usually the result of a coat of jointing compound not being adequately dried before the next is applied. It is avoidable however!

In general, air drying compounds shrink far more than plaster based compounds generally between 15-25%. As air drying compounds are typically applied quite thin, shrinkage does not tend to detract from the overall joint shape.

Setting compounds can shrink by 8-9% with around half of their shrinkage occurring between application and setting. The rest of the shrinkage occurs during the drying process and after setting. Setting compounds are typically used for the base coats and often are up to 1.4mm deep. Whilst the shrinkage percentage may be lower, the thicker amount means the actual amount of shrinkage can be noticeable.

When all is considered the shrinkage that can occur if a coat is not dry before the next coat is applied is in the order of 0.2mm-0.35mm. These are tiny figures, however are detectable on a generally flat wall and quite obvious in critical or glancing light conditions.

6.4 IDENTIFYING PRODUCT USE BY DATES

5kg Bags and Pails



GIB® and Victor Bags

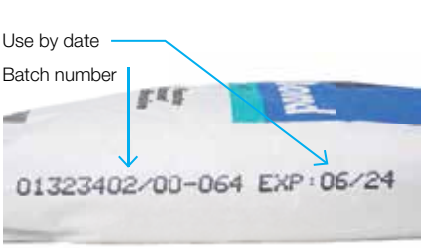

Note: The performance of GIB® and Victor compound products may be compromised if used after the date indicated.

6.5 STOPPING OF TAPERED OR RECESSED EDGE JOINTS – HAND TOOLS

These are the joints where the two tapered (recessed) edges of plasterboard meet.

Surface Preparation

- Ensure that all fixings, screws or nails, are seated just below the surface of the plasterboard. Any fixings that are driven too far into the plasterboard will cut the paper of the board causing problems such as 'popping' or 'dimpling'
- Remove any dust or loose material from the plasterboard

Mixing Instructions

- Mixing instructions for GIB® compounds can be found on the back of the bag or pail
- If hand mixing, it is better to initially mix a setting compound too thick than too thin and add water to adjust. Adding more powder to a thin mixture tends to create lumps that are difficult to mix in by hand
- If machine mixing with a paddle and drill, use a paddle with vertical sides
- Use a slow speed drill. If possible ensure the entire mixing part of the blade is under the compound whilst it is mixing. This reduces the amount of air stirred in to the product, which in turn reduces the incidence of 'pock marks' and 'pin holes'

Tips

- Paint mixing blades are not recommended (identified by the mixing part which looks like two flat wide curved ribbons). These work well in paint, but tend to mix a lot of air into the (thicker) jointing compounds
- A large battery drill is perfect for slow speed mixing, with less introduction of air to the mix compared to most relatively high speed mains power drills

Surface Preparation

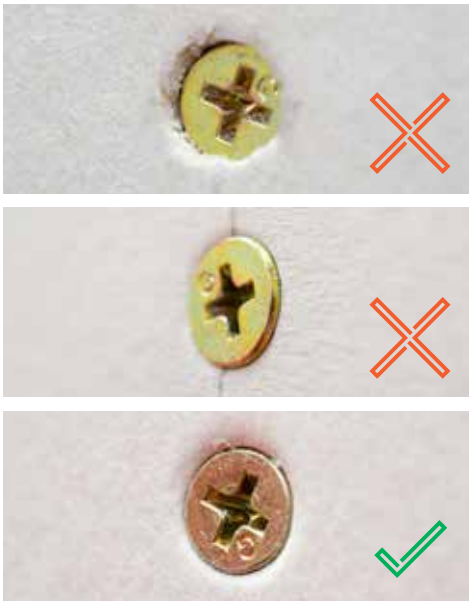

Mixing Compounds



6.6 JOINTING TECHNIQUES – HAND TOOLS

Tools Required

Some or all of the following tools will be required depending on the work being carried out.

— Rubber Spatula, or similar, for mixing plaster
— Plastic Pail
— 75mm Chamfered Broad-knife
— 100mm Chamfered Broad-knife
— 150mm Broad-knife
— 200mm Trowel (Optional)
— 280mm Trowel
— Sanding Float
— Corner Trowel
— Dust Mask

All tools must be clean and free of any old/set plaster. Remember that as these tools are being used to create a smooth finish, any kinks or scratches in the edge of the tool will cause rough areas in the plaster. To preserve edges, do not use broad-knifes for opening paint cans, etc.



First (Taping) Coat

Using a 150mm broad-knife, fill the recess formed by the edges of the sheets with GIB® jointing compound.

Centre the GIB® tape along the joint and using a 150mm broad-knife press the tape down into the GIB® compound.

GIB® Paper Joint Tape has two distinct sides. The rougher side, facing out on the roll, is bedded into the compound toward the wall surface. GIB® Paper Joint Tape can be folded for use in internal corners.

GIB RocTape® is installed similar to paper joint tape on flat joints but is not recommended for corner joints.

Draw the broad-knife (held at approximately 45 degrees to the board surface), along the joint to remove any trapped air bubbles beneath the tape.

Ensure that sufficient compound is left behind the tape to achieve a good bond.

Immediately apply a thin coat of compound over the surface of the tape. This reduces the possibility of the tape curling and wrinkling, which can lead to edge cracking.

When the compound is set, scrape back any build-up of compound along the joint.

Allow this coat to dry.



Second Coat

Apply a second coat of jointing compound with a trowel. Ensure that this coat extends at least 25mm beyond the edge of the first coat.

Feather the joints to eliminate build-up of the compound at the edges.

Allow to thoroughly dry (at least 24 hours) and scrape back any build-up of compound along the joint.

If a sandable second coat is desired: use GIB Lite Blue®, an easy sanding plaster-based compound with a 90 minute set time, developed for second coating.



Top Or Finishing Coat

Apply a finishing coat of GIB® Air Drying compound with a 280mm trowel. Joint edges should be feathered at least 25mm beyond the edges of the previous coat. Allow at least 24 hours to dry.

Using 220 grit sand paper (or finer sandpaper), lightly sand in the same direction as the joint. Take care not to scuff the face paper of the GIB® plasterboard when sanding the joint.

Tip: The finishing compound should not be harder to sand than the second coat. Refer to p. 98



6.7 STOPPING OF END JOINTS / BUTT JOINTS AND CUT EDGES – HAND TOOLS

End Joints / Butt Joints And Cut Edges

- Where possible ensure the plasterboard sheets are fixed so that the butt joint sits mid span and not on framing. If the board is already fixed, use the technique described on p. 47 (where possible) to ensure a joint recess is created
- When jointing two cut edges or sheet ends which are not recessed, care must be taken to ensure the surface build-up of compound is minimised (whilst still creating a strong joint)
- The same procedure should be followed for tapered edge joints, except that the width of each stage is double that required for the tapered edge method. This results in a joint that is around 600mm wide
- Use GIB Tradeset® 45 for the first coat and tape in
- Take extra care when bedding in the tape to ensure that sufficient compound remains behind the tape
- Blending the resultant “bump” from stopping on an un-recessed surface is an issue, especially where critical light comes into play. The wider the joint is, the less the angle it presents to the critical light, so it is less likely that a shadow will show on the side of the joint opposite the light source

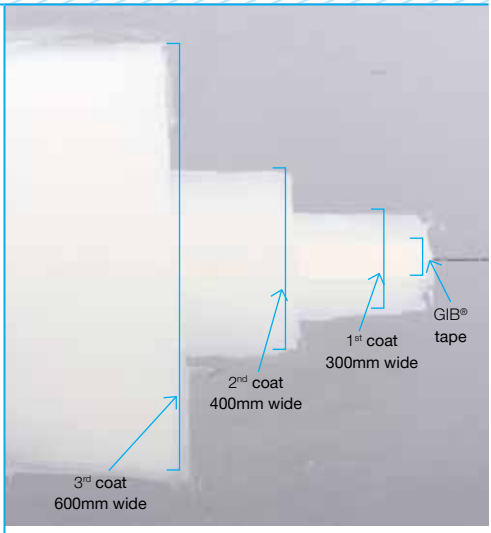

6.8 JOINTING TECHNIQUES – MECHANICAL TOOLS

The mechanical tools referenced in this guide are for representative purposes only and do not preclude the use of alternatives. These include pneumatic taping machines and spring loaded flat boxes. All tools must be used in strict accordance with the relevant manufacturer's recommendations.

Tools Include

Banjo – a taping tool containing a roll of jointing tape and compound which simultaneously applies the jointing tape and compound to a joint.

Automatic Taping tool – a more sophisticated taping tool which has better control of the depth of material under the tape and so is a more reliable tool for ensuring good tape adhesion in hot weather. However, as they can be expensive and difficult to clean, these tools do not lend themselves to applying setting compounds, and consequently are seldom seen in NZ.

Box – a box shaped metal vessel with a slot at the top and adjustable wiping surface to control the flow to the joint, and the shape of the joint. Available in different widths for the different coats of the joint and handles to suit the operator.

Corner Finishing Tools – can apply joint compound to internal corners.

Preparation

- Ensure that all fixings, screws or nails are seated just below the surface of the plasterboard. Any fixings that are driven too far into the plasterboard will cut the paper of the board causing problems such as 'popping'
- Tidy up any damaged areas of plasterboard such as broken corners. It is usually easier to remove these completely and fill them with a plaster based (setting) compound prior to continuing
- Remove any dust or loose material from the plasterboard
- Mixing instructions can be found on the back of the compound packaging

Refer to p. 83 for mixing detail.

Mechanical Stopping With Banjo And Box

A Banjo taping tool applies bedding compound and tape in one step and is an efficient method for taping-in of medium/large areas of plasterboard walls or ceilings.

Note: This device places the tape on top of a layer of plaster, the depth of which is not easily controlled. Be aware that lack of compound under the tape can cause tape adhesion issues.

Always place the banjo on the maximum setting when applying the compound in warm / hot weather.

First Coat – Banjo

— Mix the bedding compound with a drill and then carefully adjust the water content until it can just be poured from one bucket to another

Note: if the compound is too thin, the tape will tend to slide along the recess and may peel or drop out.

— Place and lock the roll of GIB® tape onto the spindle and thread inside the banjo and along the top (handle) inside edge as illustrated. Pour the compound into the banjo cavity underneath the GIB® tape. Close and clip the side panel
— Place the coated tape centrally in the joint. Hold the tape with one hand whilst pulling the banjo along the joint with the other hand (make sure that the nose of the banjo is held against the surface of the joint)
— Adjust the banjo control knob so that a layer of approximately 2mm thick of compound is on the underside of the tape and is not excessively squeezed out from the edge of the tape when applied
— After placing the tape at the end of a joint, cut the tape neatly with a broad-knife
— Using a 150mm broad-knife held at about 45 degrees, press the tape down into the compound and at the same time removing excess compound
— When the compound is set (or dry) scrape back any ridges

Note: Do not allow setting compounds to set in the banjo.



Second Coat – Flat Box

The flat boxes used for second coating of tapered joints are typically 200mm-250mm wide. They automatically dispense the correct amount of joint compound and feather the edges in one pass. The adjustable blade holder fine tunes the 'crown' for proper compound distribution and shape. The boxes are controlled by a specially designed handle.

To start, place the adjustable notch for the wiper blade on the second lowest setting and then adjust to suit the job. The advantage of using flat boxes for tapered joints is the speed with which joints can be filled. They generally will not require any further touch-up if set up and operated correctly.

— Mix the compound with a drill and adjust to a 'pourable consistency', i.e. requires a minimal effort to 'push' out of the box but not so thin that it will 'run' out of the box, or slump on the wall during use
— Using a scoop, broad-knife, or pump; fill the flat boxes with compound
— Place the box on the surface of the board as flat as possible. Place one hand just below the head of the box handle (to control application pressure to force compound out of the box) and the other hand at the other end (to control the 'brake' and keep the box running parallel to the joint)
— Allow the compound to dry thoroughly before scraping back any ridges or build up

Note: Do not allow setting compounds to set or air-drying compound to dry in the flat box.

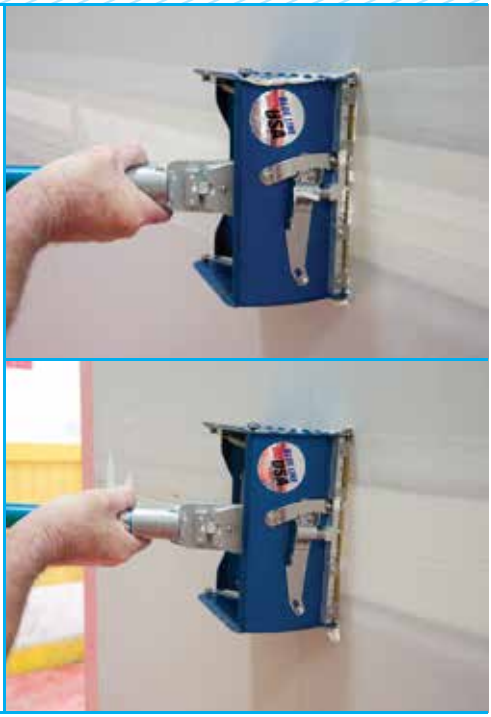

Top Or Finishing Coat – Flat Box

A 300mm flat box is typically used with specifically formulated air-drying finishing/topping compounds for the top/finishing coat.

The air drying compound should be thoroughly mixed and if necessary, the consistency adjusted to give a smooth 'tear free' finish (but not so thin that it will 'run' out of the box during use).

The 'setting' of the flat box is typically two notches above the bottom setting. However, adjustment may be necessary.

The box is adjusted and operated to leave a very smooth surface free from lumps, ridges or scratches.

Note: Don't allow air-drying compound to dry in the flat box. Placing too much compound in one application may result in bubbles, pin holes, and streaks.

Please read notes below to understand some of the issues that can be created by the use of machine tools.

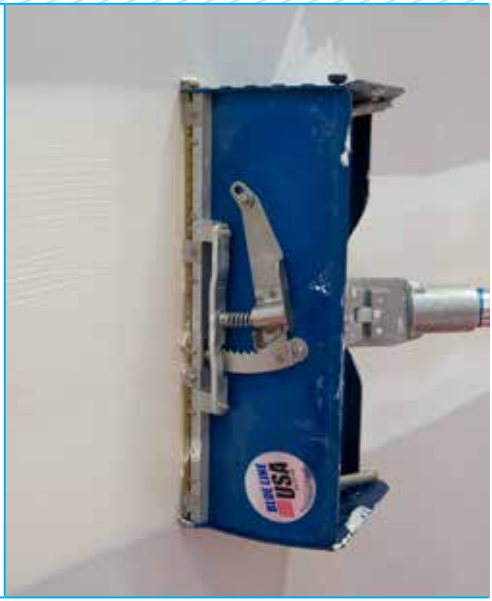

Possible Issues With Machine Tool Application

1. When using machine tools, the compounds placed in them have to be diluted (compared with that required for trowel application) to achieve a viscosity that flows readily through the machine.
2. The addition of water will result in:
   - Greater Shrinkage as the compound dries
   - Longer Drying Time due to a greater amount of water to dry
   - Possibility of Delayed Shrinkage as more water soaks into the substrate (then has to dry back through the joint)

   Longer drying times in cooler conditions must be allowed for before the next coat is applied. Delayed shrinkage may occur if the next coat is applied before the first has dried. Make allowances for this, by warming the rooms to be stopped until the joints are dry.
3. Placing tapes with an automatic taping tool is quick and easy. However it is very easy to force too much compound from under the tape. This can result in poor tape adhesion in summer, as the compound can dry out more quickly. In extreme situations this can lead to the plaster in the compound not being able to set. Be aware and check material depth when starting (to ensure the machine set up and methods of use are appropriate).
4. Horizontally fixed board not supported with framing adjacent to the joint, can result in a variation in the depth of the taper between the two boards. Machine tools can easily place a thin layer on only one edge (this can result in tape adhesion issues).

6.9 NAIL AND SCREW STOPPING

If good fixing practice has been followed, there should be no fixings in the middle of the plasterboard sheet on the wall. However, this cannot be avoided on ceilings or in fire rated or noise control systems.

Critical light areas

This method takes longer, but ensures that no air is trapped between the screw or nail head and the first coat of compound. This reduces the possibility of dimpling.

— For the first coat, press a mixed GIB® plaster based compound into the fastener indentation with a 25mm putty knife, then wipe off the excess
— Do the second and third coats as per the normal jointing procedure

Non-critical light areas

— For the first coat, wipe the compound across the top of the screw or nail head, as per normal towelling application. Use a 100mm broad-knife for the first two coats of compound
— Do the second and third coats as per normal jointing procedure

For either method, leave the first two coats to dry for at least 24 hours before applying the finishing coat with a 150mm broad-knife. Leave to dry for at least 24 hours and then lightly sand with 220 grit sandpaper.

For over-driven screws, use a short set time setting compound to minimise the time and amount of water that can soak in and swell the board paper. Leave for a longer period to dry compared to normal screw stopping. These actions may reduce the incidence of “popping” or “dimpling” on these surfaces.

6.10 CORNERS AND FINISHING TRIMS

External Corners

These can be finished with:

Paper Faced Trims

— GIB® Goldline® profiled paper faced trims
— GIB® UltraFlex® high impact reinforced corner trims
— GIB® Levelline® reinforced corner trims

Metal Trims

— GIB® Slim Angle metal trims

GIB® Slim Angle

— Mechanically fix at 100mm centres on alternate sides of the corner (fixings should also be placed on both sides at each end of the trim)
— GIB® Slim Angle can be fixed with GIB® Grabber® screws or staples (minimum 10mm)
— Apply a first coat of GIB® setting compound, using a 150mm broad-knife or 200mm trowel
— When hard, lightly scrape back using a broad-knife or the edge of a trowel
— Apply a second coat of GIB® setting compound using a 200mm trowel. When hard, lightly scrape back
— Apply a third coat of a GIB® air drying topping compound using a 300mm trowel and leave to dry
— When thoroughly dry, lightly sand in the direction of the joint with 220 grit or finer sandpaper, taking care not to scuff surface paper of the plasterboard

Internal Metal Corner Trims

Inside corners are installed similarly to outside corners except that only one top coat of a GIB® finishing compound is required. A corner trowel may be used to apply and smooth the compound if desired.

Apply similar installation methods for the other metal trims. Casing beads can be secured using GIBFix® adhesive.

Note: Bullnose external corners are not permitted in fire rated systems.

Paper Faced Trims

- Paper faced trims such as GIB® Goldline® Platinum Tape-on trims, GIB® UltraFlex® and GIB® Levelline™ are installed by embedding directly into the joint compound
- A slightly thinned mix of a GIB® setting compound is recommended for the installation of paper faced trims because they provide maximum adhesion to the paper surface of these trims
- When installing external Bullnose Corners, check that the plasterboard edges do not extend past the corner of the framing substrate on either side. If the plasterboard edges do protrude, trim them back before commencing installation
- Make sure that products such as GIB® UltraFlex® are fully supported by the two plasterboards neatly butted up to each other. Otherwise a void is left behind the trim, which will become a weak/fail point if the corner is impacted at some point during its life
- Apply a 75mm wide band of GIB Tradeset® or GIB MaxSet® to each side of the GIB® plasterboard corner
- Cut trim to required length and position over the joint compound. Allow 10mm at the bottom for expansion and contraction of framing members. Mitre any corners which will be meeting other trims at corners
- Press the trim firmly into the compound evenly along its full length, embedding the trim and forcing out excess compound. The installation of the trim may be performed with the aid of a corner roller. It is crucial an adequate amount of compound remains under the tape for good adhesion
- Using a 100mm broad-knife, wipe off surplus compound and eliminate all air bubbles under the paper. Be careful not to remove all compound
- Using additional compound, flush the joint with a 150mm broad-knife or trowel. Remove any excess jointing compound on the nose of the trim by wiping with a damp sponge
- Allow to harden and dry, then apply a light top coat of GIB® air dry compound (in a band of about 200mm wide). This is done using a large (250–300mm wide) broad-knife or trowel
- Feather the compound by drawing the knife along the trim, with one edge of the blade riding on the nose of the trim and the other on the surface of the GIB® plasterboard
- Repeat for the other side of the trim and allow to dry
- Once the previous coat is dry, apply a second top coat of GIB® finishing compound. Feather the edges of each coat about 50mm beyond the preceding coat. When the top coat is completely dry, lightly sand, taking care not to scuff the face paper of the GIB® plasterboard

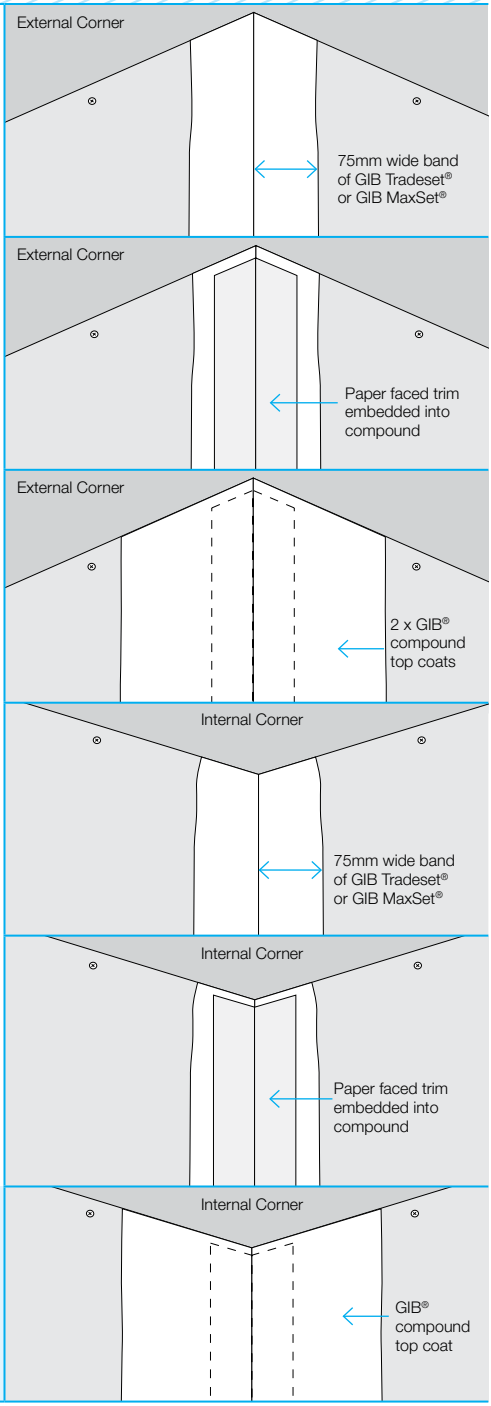

Tips:

- Multi purpose air drying compounds may be used to adhere GIB® UltraFlex® and GIB® Levelline® trims, however they may take a long time to dry
- Generally air drying compounds have a higher shrinkage. Filling of any voids behind tapes with air drying compounds is not recommended, voids should be filled with setting compounds

6.11 NEGATIVE DETAIL

Negative details can be formed at plane junctions and at junctions between dissimilar building materials. There are many different effects that can be achieved and some suggestions are shown below.

- GIB® Goldline® Platinum GR reveals, or the GIB® Rondo® P50 metal reveals, can be used to create straight, evenly spaced details that clearly define the junction
- Care needs to be taken to ensure that joints are straight and that adequate clearance is provided for the flange of the reveal trim

Note: Allow a 14mm–17mm gap for the top flange of the GIB® Goldline® Platinum trim or a 12mm gap for the Rondo® P50 metal reveal trim

Negative Detail

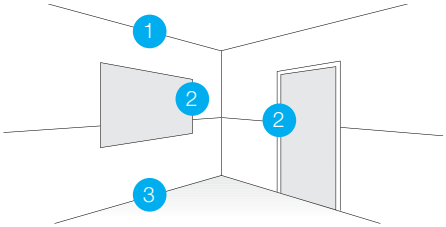

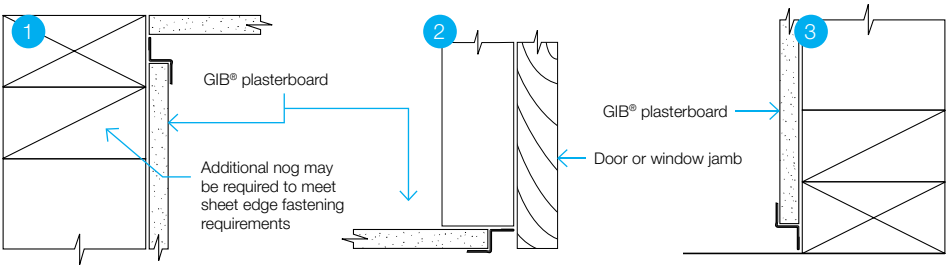

6.12 GIB-COVE®

Preparation

- Always fix GIB-Cove® prior to skim coating or any paint application
- Ensure that all joints that are not to be covered with GIB-Cove® are stopped first. For accurate placement of GIB-Cove®, mark walls with a chalk line (either 50mm, 55mm, 75mm or 90mm) from the wall/ceiling angle. Measure and cut the GIB-Cove®, using a fine toothed saw and a mitre box. Tidy the cut edges using sandpaper
- If cove work has not been done before, it is suggested that slight over-ordering is done so a short length is available to practice cutting the angles up the right way
- It is also suggested that a chalk line be used around the room to establish the correct position on the wall for the bottom of the GIB-Cove®
- Measure the GIB-Cove® to get the correct measurement for the chalk line set up. Do this by placing a straight edge from each edge of the cove, and measuring the length to where they bisect. Use this measure as the chalk line datum
- Align the cove on the chalk line to ensure all the cove is installed at the same level
- Joints in long runs of GIB-Cove® should be mitred (not square cut)
- Mix GIB-Cove® Bond to instructions on the back of the bag







Application

- In smaller rooms (e.g. toilets and bathrooms) fix shorter lengths of GIB-Cove® first. This allows the longer more flexible pieces to be placed last for a tight fit
- Apply the GIB-Cove® Bond in two strips (about 10mm thick) along the entire length of each edge of the GIB-Cove® where contact will be made with ceiling and wall
- Where friction joints or deflection heads are used in non Fire Resistant Rated commercial light steel framed construction, the GIB-Cove® may be adhered to the ceiling only and sealed to the wall using a flexible sealant
- Carefully place the first length along the chalk line and press firmly into position. Hold in place until the adhesive grips
- Remove excess GIB-Cove® Bond using a broad-knife and clean the joints with a moistened brush or sponge
- Where walls and ceilings are uneven, it may be necessary to hold the GIB-Cove® in position for longer until the GIB-Cove® Bond has set. This is done with partly driven nails or screws supporting the edge of the GIB-Cove®. These can be removed and the holes stopped when the adhesive has set. Note: GIB-Cove® Bond must be discarded after it shows signs of stiffening



6.13 SKIM COATING

All paint products and systems must be applied in strict accordance to the manufacturer's recommendations.

Level 5 Skim Coating

Skim coating is one method to achieve a Level 5 Finish as specified in AS/NZS 2589:2017. A Level 5 Finish is defined as being 'characterised by a parity of texture and porosity' over the entire surface of the plasterboard, jointing and fastener points.

Skim coating can be achieved by applying jointing compound to the surface with a trowel. This creates a uniform texture (and also hides bumps, steps and joint protrusions).

Alternatively, high build paint systems can be used. These are comprised of a specially formulated high build coating which is very efficiently applied with airless spray equipment. These also do an excellent job of masking surface texture variance, but may not correct irregularity in the board surface.

Trowel Application of a Skim Coat New GIB® Plasterboard

This surface is the simplest to skim coat, however care should still be taken as problems can occur through incorrect application.

Any of the GIB® ready mixed air drying range of compounds can be used for trowel applied skim coating. Consider weather conditions when making the choice to ensure optimum sand-ability is achieved. See p. 98 for further detail.

- Joints should be prepared in the normal manner up to the finish coating stage. Allow plaster to dry thoroughly
- Apply a skim coat of approximately 0.25mm–0.5mm (but no greater than 1.0mm) of the GIB® compound of choice to the entire surface of the board
- Leave the skim coated area until completely dry
- Sand by hand or a pole sander, in one direction with 220 grit or finer sandpaper

— Ensure surface is free of dust. Seal with a wallboard sealer prior to decoration. Use a pigmented oil based sealer for areas that will be exposed to moisture

Existing Plasterboard – Undecorated

These areas would typically include board that has been fixed to the wall and has not been stopped. When the board has been exposed to the elements for an extended period of time face paper may fade.

1. Remove any dirt or oil with detergent. Allow to thoroughly dry before continuing
2. Seal the entire area with a pigmented-oil based sealer
3. Lightly sand the entire area with 100–120 grit sandpaper
4. Apply a skim coat of approximately 0.25mm–0.50mm of GIB® air drying compound to the entire surface of the board
5. Leave GIB® air drying compound to completely dry. Sand with 220 grit or finer sandpaper, in one direction, using either a pole sander or sanding block. A vacuum power sander can also be used
6. Ensure surface is free of dust. Seal with an Acrylic Wallboard Sealer prior to decoration. Use a pigmented oil based sealer for areas that will be exposed to moisture

Existing Plasterboard – Painted Surface

1. Clean the entire area to be skimmed with water and a scouring pad. Use an alkaline cleaning solution in water to remove any dirt/oil. Thoroughly rinse with water
2. Sand painted areas to be skimmed with 100–120 grit sandpaper
3. Apply a skim coat of approximately 0.25mm–0.50mm of GIB® air drying compound
to the entire surface of the board
4. Leave GIB® air drying compound to completely dry. Sand, with 220 grit or finer sandpaper, in one direction, using either a pole sander or sanding block.
5. Ensure surface is free of dust. Seal with an Acrylic Wallboard Sealer prior to decoration. Use a pigmented oil based sealer for areas that will be exposed to moisture

Existing Plasterboard – Previously Wallpapered

This surface would be commonly encountered in renovation work where old wallpaper has been removed and skim coat is required. This surface presents special problems because it is usually rough, uneven, has loose paper and is covered with wallpaper size.

1. Rinse area twice with warm water and leave to dry
2. Repair any damaged areas to the core of the plasterboard with GIB Tradeset® 20 or 45. Ensure plaster is completely set and dry before proceeding
3. Seal the entire area to be skim coated with a pigmented oil based sealer. (**Note:** Water based acrylic sealers must not be used on existing wallpapered plasterboard)
4. Sand the entire area with 100–120 grit sandpaper
5. Apply approximately 0.25mm–0.5mm thick coat of GIB® air drying compound
6. Leave the GIB® air drying compound to completely dry. Sand, with 220 grit or finer sandpaper, in one direction, using either a pole sander or sanding block
7. Ensure surface is free of dust. Seal with an Acrylic Wallboard Sealer prior to decoration. Use a pigmented oil based sealer for areas that will be exposed to moisture

6.14 SANDING

Winstone Wallboards has a range of compounds to cater for different drying conditions experienced in New Zealand.

The GIB Trade Finish® compounds have different sanding characteristics. For example, during winter a harder finishing compound can be used to avoid scratching and swirl marks. During summer, an easier to sand finishing compound can be selected to speed up sanding (and where a lot of hand sanding is required).

When drying conditions are not ideal, problems may arise with softer compounds scratching too easily and leaving “swirl” marks after sanding. A harder finishing compound is recommended in these conditions (e.g. a switch from GIB Trade Finish® Lite to GIB Trade Finish® Multi or from GIB Trade Finish® Multi to GIB Trade Finish® Heavy Weight in colder conditions).

When selecting a harder finishing compound, it is important to remember the coats underneath need to be just as hard (or harder) and not softer. Using softer compounds underneath a hard compound can be problematic if the top coat is completely sanded away. This can manifest as grooves or trench marks being created rapidly as the softer compound underneath is removed more easily; and may give the impression the top coat has delaminated when it has not. To avoid this, use the same compound or a softer compound for the top coat.

Ease Of Sanding

The plaster based GIB Tradeset® range and GIB MaxSet® taping compounds are both much harder than any of the GIB® air drying compounds, so there are no compatibility issues.

GIB Lite Blue® (which is used as a second coat) is a softer setting compound compared to the GIB Tradeset® range and GIB MaxSet®. GIB Lite Blue® is softer than the hardest air drying compound but suitable to use under GIB TradeFinish® Multi or softer compounds.

Refer to p. 98 for a list of GIB® compounds ordered from easiest to hardest to sand.

Machine sanding

Purpose built vacuum sanding machines can be used to significantly reduce airborne dust, as well as the time and effort taken to sand the joints (and general clean-up time).

- Follow the manufacturer’s instructions. Use 220 grit paper
- When sanding, position the sanding head so that it is in contact with the joint. Press lightly on any feathered edges so that the paper is not scuffed excessively
- Be careful when using a machine sander on nail and screw hole areas. If the paper surface is scuffed excessively, it may show through the finished painted surface as a variance in texture or sheen, diminishing the overall quality of the finish

Pole sanding

- Pole sanding is a dry sanding technique
- Round pole sanders have no corners to dig into the surface and use standard sanding disks like a machine sander
- Rectangular pole sanders are good for corners
- The main drawback with pole sanding is the volume of dust created. Ensure all safety issues are addressed by wearing suitable personal protective equipment before using these tools

Sanding Blocks

These are block shaped sanding pads, handy for corners and small sanding areas.

Sandpaper

Sanding disks come in many types.

Although they may state the same grit size, the abrasive material used also plays a part in how quickly the surface can be sanded. If too abrasive and drying issues are experienced, swirl marks may be left in the surface of the joint.

If problems are experienced with one sort of sanding disk, try another. If the problems are on-going, change to a harder air drying compound, or heat the premises to be stopped (to ensure the joint has dried), and is therefore sandable.

Sanding In General

- Always sand in the direction of the joint
- Try to minimise “scuffing” of the paper surface next to the joint
- If scuffed excessively, the “furry” quality of the sanded paper will show as a different texture through the painted surface, creating a visible difference in sheen
- Be aware that damp conditions (such as foggy weather), can cause the surface of the board to absorb moisture, and be far more likely to scuff badly when sanded. Either heat the room, or use worn sand paper disks to ensure a less abrasive effect is applied to the paper

GIB Ultraline® plasterboard has a surface coating on the paper which is far more resilient to sanding compared to conventional paper surfaces. This is one of the reasons why this board is touted as a Level 4-plus product.

6:15 JOINT SYSTEMS RECOMMENDATION

The GIB® plasterboard range of air drying compounds caters for different weather conditions caused by seasonal change.

Air drying compounds (the compounds in pails) are held together by binders (glue). When these binders coalesce and cure, they bind the filler particles (mostly limestone) together which causes the product to go hard. How hard a specific compound will be to sand is dictated by temperature as it cures.

- The warmer the weather, the harder the product will become to sand
- The colder the weather, the softer the same product will become to sand

This can be seen when a compound that is great to machine or hand sand when applied on a hot summer’s day is seen to be much easier to sand if applied on a cold winter’s day. This can result in the winter application sanding too easily, resulting in swirl marks that ruin the finish when sanded, it may also be easily damaged if trade folk brush past a dry but not painted joint.

Conversely, a harder compound may sand well in winter, but become too hard if applied in very hot weather, or if in-line with sun shining through a window in summer resulting in direct UV penetration.

This may result in the product becoming “glazed” as it is sanded and very difficult to sand.

To resolve this issue there is a range of GIB® compounds, each of which is optimised for warm, cold, or in-between weather use. It is up to the trades person to select the product most suited to the condition to ensure ease of sanding and quality of finish.

The GIB Trade Finish® range was developed to ensure a product is available that has similar rheological (trowelling) properties through the range, but different sanding characteristics to suit different seasons.

The harder to sand products should be used in the colder weather (winter). In these conditions the binder will not cure as hard, however it will still be hard enough to resist swirl marks, scratching and trade damage.

The easiest products to sand should be used in warm weather, when the binder will cure harder. This creates a surface that is easy to sand and can be machine sanded in summer without leaving swirls and dig marks.

The table on the right shows the sanding characteristics of each GIB® compound.

Remember

- Harder sanding products in cold seasons
- Easier sanding products in warmer weather

Change from one to the other for the cold and warm seasons if ultimate ease of sanding without swirl marks and scratching is desired. Use the chart to guide you to figure what will work best for you.

Ease of Sanding Table

	Sanding/Scrape	GIB® Air Drying Compound	Setting Compound
Warmer ↑ Weather Conditions ↓ Colder	Very easy sanding	GIB Trade Finish® Extra Lite 	
	Easy sanding	GIB Trade Finish® Lite GIB Plus 4® 	
		GIB U-Mix® 	
	Moderate sanding	GIB Trade Finish® Multi 	GIB Lite Blue® 
	Harder to sand	GIB Trade Finish® Heavy Weight 	
	Easy to scrape		GIB Tradeset® 
	Scrape while “green”		GIB Maxset® 

6.16 PAINTING

All preparation and painting work should be undertaken in accordance with AS/NZS 2311 'Painting of Buildings' and with the relevant paint manufacturers recommendations.

Surface Preparation Prior to Painting
Ensure all stopped surfaces are dry, sanded smooth and that any dust, oil, grease or dirt has been removed with a soft brush, damp soft cloth or a vacuum cleaner.

Ensure all windows, electrical fittings, furniture, covers, doors (or other components which are not to be painted), are masked out, covered or protected throughout the painting process.

Guidelines
- Flat paints tend to minimise visibility of any minor surface imperfections but may not be suited to areas that need regular cleaning
- Light tone colours tend to diffuse light, which helps in disguising any minor surface imperfections
- Avoid the use of harsh lighting (e.g. 'wall washers') or situations such as windows extending to the wall or ceiling line. If these situations are unavoidable consider the use of a Level 5 pre-decorative skim coat
- As a general rule 'cut in' around edges and doors with a brush and then apply the remainder of the paint system with a 6mm –10mm nap roller sleeve
- Always maintain a 'wet edge' with the roller and lay off the final coat in one direction, preferably parallel to the dominant light source
- On faded GIB® plasterboard, use a pigmented alkyd sealer as the first coat

IMPORTANT NOTE: BACK ROLLING

Where the paint system will be applied by airless spray equipment, it is essential to 'back roll' the final coat of paint using a roller with a fine nap. This is to create a 'soft' orange peel effect which aids in disguising plasterboard jointing, or any other minor surface imperfections.

Painting Existing Walls
Follow the paint manufacturer's instructions regards preparation and methods of application.

Wallcoverings
New Surfaces – Follow the application instructions of the wallcovering manufacturer.

6.17 PLASTER RENDERING INTERIOR MASONRY OR CONCRETE

Victor® Multi Plus is a plaster based material formulated for application to interior concrete or masonry surfaces.

Mixing Instructions: Undercoat
Victor® Multi Plus with the addition of sand, can be used as a base or undercoat coat (up to a ratio of 35% of sand by volume) to rule out uneven internal concrete substrates. The sand must be a good washed grade, free of contaminants.

- As a guide, use a ratio of 2:1 (two dry volumes Victor® Multi Plus to one volume dry sand). The grade and moisture content of the sand will influence the water requirement
- Ensure mixing equipment and water is clean
- Use 1.1–1.2 litres of water to 2kg of the Victor® Multi Plus and Sand Mixture (11–12 litres of water per 20kg bag)
- Place one volume of water in the container and then sprinkle two volumes of compound into the water. DO NOT use lime
- Briefly mix until plaster is blended (by hand or electric drill fitted with mixing blade). Note: maximum drill speed 600rpm, as over-mixing can accelerate setting and reduce working time
- Add 1 volume of sand and thoroughly remix, adjusting consistency if necessary. Note: do not retain product that has started to harden (or intermix with previously prepared material), as this will affect the finish and give an unpredictable setting time
- Wire brush surface to provide key for subsequent coats if the surface has been 'polished'

Mixing Instructions – Finish Coat

- Ensure mixing equipment and water is clean
- Use 1–1.06 litres of water to 2kg of Victor® Multi Plus (10–10.6 litres of water per 20kg bag)
- Place water in the container and then sprinkle the compound into the water. DO NOT add lime
- Allow to soak for 3–5 minutes
- Mix until plaster is smooth (by hand or electric drill fitted with mixing blade). Note: maximum drill speed 600 rpm; as over-mixing can accelerate setting and reduce working time

Adjust consistency if necessary by adding water sparingly. Note: do not retain product that has started to harden (or intermix with previously prepared material), as this will affect the finish and give an unpredictable setting time.

Application of Undercoat and Finishing Coat

- Application thickness should be approximately 3mm for a finishing coat. For thicker filling of uneven surfaces such as recessed mortar joints (up to 15mm), it is preferable to lay on an undercoat. The undercoat should be ruled off and trowelled to a flush, but unpolished finish. The Victor® Multi Plus finishing coat may be applied once the undercoat has adequately set (if applied too early the undercoat may distort and fail)
- The finishing coat of Victor® Multi Plus is applied and lightly trowelled to fill imperfections and then finished to a smooth surface. Do not attempt to feather out the gauge as the minimum coating thickness is 3mm. After the background has absorbed most of the water from the finish coat, trowel the surface to make it denser. Light dampening of the surface with water may be necessary to enhance trowelling. As the final set takes place, close in with the trowel to provide a dense smooth surface. Walls should be worked from the top to the base
- Victor® Multi Plus may be applied to a suitably prepared base (which must be sound and free of oil, grease, wetting agents, shiny smooth finishes, dirt or other loose material). If the surface will not provide a key (as for some precast concretes), then it should be roughened or coated with a suitable bonding agent. Check with the concrete manufacturer for bonding agent recommendations

Concrete Masonry, Blocks and Bricks

The surface should be:

- dampened with water if dry
- under coated with Victor® Multi Plus, render, then the finishing coat is applied. Check with a concrete manufacturer for sealing agent recommendations

If the undercoat has dried out, it should be uniformly and lightly dampened down with water (immediately prior to the finish coat application).

Precast or 'Off the Form' Concrete

- Generally application of a bonding agent is required before plastering is commenced. If the surface is uneven, undercoating is recommended
- The finish coat can be applied as soon as the undercoat has set

Low Suction Backgrounds

Precast slab construction, high density concrete, no-fines cement, etc.

- The substrate has a very large influence on the nature of application where a low suction background limits the Victor® Multi Plus thickness
- If too thick a coating is applied in the first coat (above 5mm), there may be a tendency for the material to "slump" on the wall. In any low suction background situation, a bonding agent MUST be used to avoid failure

Medium to High suction Backgrounds

Sand/cement undercoats, aerated concrete slabs and blocks, normal unglazed porous brick work, etc.

- In high suction background situations, the substrate must be adequately dampened down with water (or preferably a diluted bonding agent applied) to control the porosity/ suction

These types of substrate do aid the application of a thicker coating, with the subsequent higher suction holding the coats more firmly onto the substrate. Ideally the final coat should be between 3mm-5mm thick.

7.0 REPAIRS AND MAINTENANCE

7.1 PLASTERBOARD REPAIRS

Plasterboard repairs are necessary for a number of reasons. Cracks in plasterboard or sheet joints are generally the result of movement of a building. A common example of this is where joints are made at the high stress points above and/or below the corners of windows and doors. If you notice these cracks forming, it is suggested you leave these for approximately 1 year before repairing. This allows the building to settle and should reduce the likelihood of problems recurring, but is no guarantee the same problems will not occur.

We also include some useful pointers when repairing dings and holes in GIB® plasterboard. In addition we cover the mounting of fixtures to GIB® plasterboard when fixing into a stud with screws or nails is not possible.

Note: These instructions are NOT suitable when conducting repairs to fire rated walls or ceilings. Similarly, mounting fixtures in GIB® fire rated walls MUST BE AVOIDED as this will affect the performance of the fire rated system (see GIB® Fire Rated Systems literature).

Tools

Some, or all, of the following tools will be required depending on the actual work being carried out.

- Rubber spatula (or similar) for mixing plaster
- Plastic Bowl
- 150mm Broad-knife
- Sanding Block
- Sharp Craft Knife
- 280mm Trowel

All tools should be clean and free of any old and set plaster. Stainless steel tools are recommended as these are less likely to corrode.

Tip: A light spray with lubricant and a wipe with a cloth or paper towel will also help keep metal tools in the best condition.

Remember that as these tools, e.g. broad-knives, are being used to create a smooth finish, any kinks or scratches in the edge of the tool will cause rough areas in the plaster. Do not use broad-knifes for scraping, opening paint cans, etc.



Repairing Dings, Cracks and Scratches

The following procedure should be used for repairing dings, cracks and scratches less than 2mm deep.

- Sand the area around the repair to ensure the best adhesion between the compound and the painted surface
- Using a broad-knife apply GIB RediFilla® to the damaged area
- Leave the compound to dry (at least 24 hours for areas up to 1mm thick and 48 hours for thicker areas)
- Using 220 grit sandpaper (or finer), sand the area in one direction (not in a circular motion)
- Decorate as required



Repairing Minor Holes

Occasionally a plasterboard patch will be required to repair a damaged wall.

- GIB RediFilla® is a pre-mixed, air drying compound that can be used to repair dings, marks, dents, and blemished surfaces on plasterboard and other surfaces
- It's an easy-sand product to which paint adheres, so can be used as a total repair system for minor repairs
- GIB RediFilla® is available in handy 2 litre pails

Minor holes or construction of small joints for one-off hole repairs

- GIB TradeFilla® is a setting compound. When mixed with water, it has a 10 minute working life
- It changes viscosity during its working life, enabling differing surfaces to be filled by the same product (e.g. repairing a grazed or rough surface when thin, and filling holes as it thickens up)
- When dry, GIB TradeFilla® is a sandable product to which quality paints adhere
- It can be used for the entire repair process, or for the first two coats (in conjunction with GIB® air drying compound as the top coat)
- GIB TradeFilla® is available in a 5kg bag

Larger or multiple repairs

GIB Tradeset® 20 is a setting compound that sets hard in approximately 10–30 minutes when mixed with water.

- Complete drying may take a further 24 hours depending on how thick the compound is applied
- GIB Tradeset® 20 is available in 5kg and 20kg bags
- Tip: As a guide when mixing powder compounds, sprinkle in just enough powder until the water no longer soaks through. If water soaks through, sprinkle in a little more powder
- Tip: It is preferable to mix the compound too thick than too thin. It is easier to add water than to add powder
- Leave the mixture to soak for approximately 30 seconds
- Mix using a rubber spatula or similar for approximately 90 seconds until the mixture is smooth and lump free.

Drying Time

Joint compound must be allowed to dry before it is painted.

Approximate drying times for air drying compounds is a minimum of 24 hours between coats (and longer if the conditions are cold and/or damp). See p. 84.

Water, air and mix temperatures should be kept above 10°C. If temperatures are low, place a fan heater in the room and leave on a moderate setting (no more than 20°C) for a couple of hours. Complete the job, then leave the fan heater going for 24 hours, with the door open to allow exchange of air into the room. This will ensure the taping coat dries out in a reasonable time.

Buy only as much product as is necessary to complete the work you will be doing.

Clean Up

Leave any spilt material to harden before scraping up and disposing of to landfill. A little warm water on a cloth is normally sufficient to remove any residue.

Repairing Small To Medium Holes (up to 150mm in diameter)

Winstone Wallboards recommends the use of GIB Tradeset® 20 or GIB TradeFilla® for base coats and GIB Plus 4® or GIB RediFilla® for the finishing coats.

1. A GIB® plasterboard patch will be required for holes up to 150mm in diameter
2. Cut away the damaged area to a neat rectangular hole
3. Sand the area around the repair to ensure the best adhesion between the compound and the painted surface
4. Cut a piece of GIB® plasterboard that is approximately 20mm longer than the hole, but small enough to fit through the hole
5. Place a 60mm flat head nail through the centre of the piece of GIB® plasterboard and coat the ends with compound
6. Insert the patch into the hole and pull toward the front using the nail
7. Once hard (approximately 1 hour) gently push the nail back through the patch
8. Cut a piece of GIB® plasterboard to loosely fit the hole
9. Use compound to fix the patch in place
10. Apply compound over the joints
11. Immediately place a length of paper jointing tape over the four edges into the compound, using the broad-knife to remove any air bubbles under the tape
12. Once the first coat is hard, apply a second coat of compound over the joint areas, feathering the edges, so that it is approximately 250mm wide
13. Leave the compound to dry for at least 24 hours
14. Scrape away any rough edges using a broad-knife
15. Apply a thin finishing coat over the patched area
16. Leave to dry and sand smooth
17. Decorate the area as required

Note: These instructions are NOT suitable when conducting repairs to fire-rated walls. Similarly mounting fixtures in fire-rated walls MUST BE AVOIDED as this will affect the performance of the fire rated system.

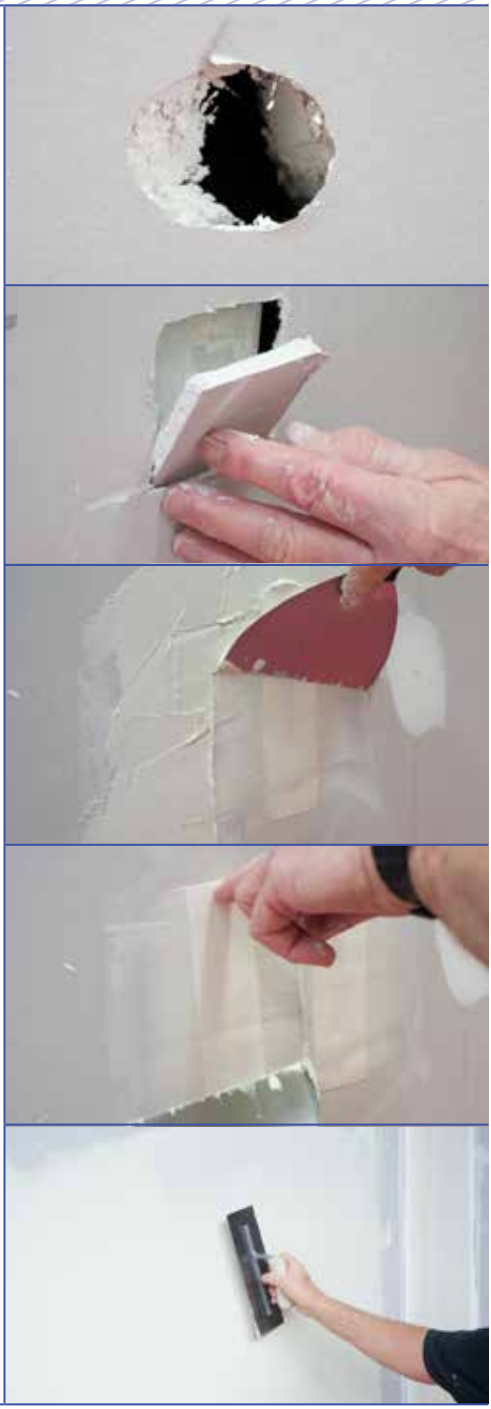

Repairing Large Holes (over 150mm in diameter)

For larger holes it becomes necessary to cut away the damaged area back to one or two studs and use a GIB® plasterboard patch.

- Cut away the damaged area to either one or both studs surrounding the damage to form a rectangular hole
- Sand the area around the repair to ensure the best adhesion between the compound and painted surface
- Cut a length of GIB® plasterboard that is 100mm wide and 100mm longer than the height of the hole.
- Tip: If you have cut away to both studs this will not be required. Fixing to both studs is the easier method of repair, but is not always possible
- Using GIB Tradeset® 20 or GIB TradeFilla®, fix the plasterboard to the side of the hole which is not over the stud
- Cut a new piece of GIB® plasterboard to fit the hole and fix this to the stud(s) and/or plasterboard back-block
- Apply a coat of GIB Tradeset® 20 or GIB TradeFilla® over the four joints using a broad knife
- Immediately place a length of paper jointing tape into the compound, using the broad knife to remove any air bubbles under the tape

Tip: If any blisters appear in the tape this is usually an indicator that insufficient compound is present behind the tape. Lift the area of tape away using the corner of the broad-knife, apply a small amount of compound and press the tape back into the compound once more.

- Once the first coat is hard apply a second coat of GIB Tradeset® 20 or GIB TradeFilla® over the joint areas, feathering the edges, so that it is approximately 250mm wide
- Leave the compound to dry for at least 24 hours
- Scrape away any rough edges using a broad knife
- Apply a thin coat of GIB RediFilla®, or any other GIB® air drying compound, over the patched area
- Leave to dry and sand smooth
- Decorate the area as required



7.2 MOUNTING FIXTURES TO GIB® PLASTERBOARD

The first option for attaching fixtures to plasterboard walls is to try and locate any framing behind the fixture. If it is not possible to make use of the framing to attach the fixture, there is a wide range of proprietary fastenings for attaching fixtures of varying weights.

Strictly follow the manufacturer's instructions regarding weight limits.

Tools

Some, or all, of the following tools will be required depending on the actual work being carried out.

- Drill and bits
- Screw Driver

Systems

- Some options are shown in the diagrams on the right hand side of this page
- These can be used in GIB® plasterboard walls that are NOT fire-rated
- They are suitable for fixing lightweight items such as pictures, coat hooks and fire extinguishers (up to 20kg), etc. in situations where fixing into the stud with nails or screws are not possible.
- These systems are NOT suitable for heavy items such as shelving, cupboards or vanity units which require additional framing for support
- The fixing method depends on the thickness of the GIB® plasterboard and the distance that the fixture hangs out from the wall

The following guidelines are indicative only. If in any doubt, consult the fixing manufacturer or distributor. The capacities shown are given for 10mm GIB® Standard plasterboard.

Allowable Fixture Weight 3kg

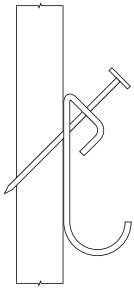

Allowable Fixture Weight 6–8kg

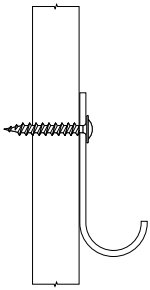

Allowable Fixture Weight 8kg

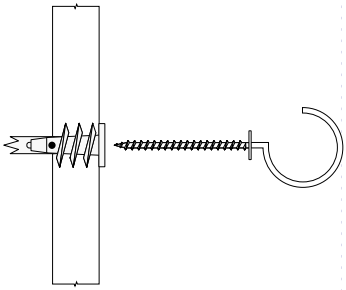

Allowable Fixture Weight 15–20kg

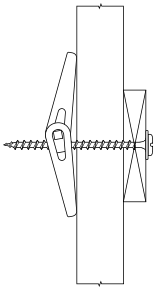

8.0 GIB® TROUBLESHOOTING

Blisters in Tape

Description
— Bubbles appear in areas of the paper jointing tape (ranging in size from approximately 10mm to 40mm, or more)

Remedy
— Slit tape to open up blistered area
— Fill out with compound, then press tape back in place with broad-knife
— When dry, smooth to level finish

Cause
— Insufficient compound used under tape
— Tape not initially pressed into good contact with compound
— Too much compound forced from under tape by excessive tool pressure when embedding
— Not enough compound in recess
— Compound gauge is too dry

Prevention
— Provide sufficient compound under entire tape – 0.8mm

Centre Cracking

Description
— Cracks appear in the joint down the centre of the joint tape

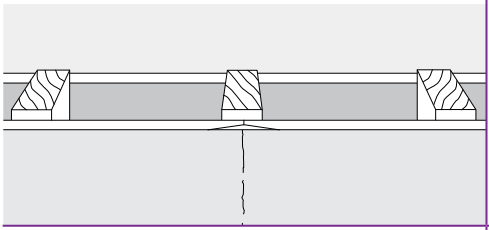

Remedy
Relieve stress, i.e. providing adequate isolation by installing a control joint and re-taping, then feathering compound over broad area to disguise build-up

Cause
— Abnormal stress build-up resulting from structural deflection or racking
— Excessive stresses resulting from hygrometric and/or thermal expansion and contraction

Prevention
— Correct unsatisfactory environmental conditions
— Provide sufficient relief and re-tape
— Provide proper isolation from structure to prevent stress build-up
— Provide adequate control joints
— Structurally brace underlying framing
— Ensure moisture content of timber is 18% or less

Joint Darkening

Description
— A dark area occurs in the area of the joint commonly as a result of set compound being darker than dried compound

Remedy
— Redecorate after joints are thoroughly dry

Cause
— Occurs most commonly with colour-tinted paint rather than white. Most severe when applied in humid weather or when joints have not fully dried

Prevention
— Be sure joints are thoroughly dry before painting

Edge Cracking

Description
— Cracks at edge of GIB® tape or GIB® Goldline® trims



Remedy
— Remove all poorly bonded tape, then reapply compound and tape in correct manner

Cause
— Fast drying of taping compound due to high temperature and low humidity, or excessive drafts
— Improper application, e.g. over-dilution of compound, use of wrong compound, or no second coat over tape
— Cold, wet application conditions (also causes poor bond)

Prevention
— In hot, dry conditions, use GIB Tradeset® 45
— In extreme conditions use a multi-purpose air drying compound. Note: these dry rather than set, so provide more open time
— Place shielding devices over room openings to prevent drafts. Do not apply joint treatment over hot surfaces
— During cold weather, control heat at minimum 10ºC and supply good ventilation
— Avoid practices listed under “Cause” opposite

Excessive and/or Delayed Shrinkage

Description
— Shrinkage that occurs after longer time periods or is unusually high

Remedy
— See ‘starved joints’ (p. 108)

Cause
— Atmospheric conditions – slow drying and high humidity
— Insufficient drying time between coats of compound
— Excessive water added in mixing compound
— Excessive compound depth
— Combinations of the above

Prevention
— Ensure that each coat of compound is properly dry before applying the next. Ensure a minimum temperature of 10°C is maintained during application and drying of compounds

Shadowing

Description
— Shows as a build-up of dust, typically once the wall has been decorated

Remedy
— Wash painted surfaces with warm water and redecorate surface if necessary

Cause
— Temperature differentials in outside walls or top floor ceilings cause airborne dust to collect on colder condensation spots of interior surface

Starved Joints

Description
— Joint area is under filled in relation to the surrounding plasterboard

Remedy
— Reapply a full coat of compound over tape. Since this is the thickest application most shrinkage occurs in this coat, making it easier to fill taper properly. Finish by standard procedure

Cause
— Delayed shrinkage caused chiefly by insufficient drying time between coats of compound
— Insufficient compound applied for second taping coat to fill joint recess/taper. Shrinkage usually progresses until drying is complete
— Over-thinning compound, particularly with boxes

Prevention
— Allow each coat of compound to dry thoroughly before applying succeeding coat, or use a low-shrinkage setting compound such as GIB Tradeset® or GIB Lite Blue®

Finish Gloss Variation

Description
— Variations in gloss level of paint between the plasterboard and joint area

Remedy
— Allow to ‘age’ for 3–4 weeks then redecorate. Ensure that the paint is roller applied

Cause
— Differences in suction of the board paper and joint compound. Problem accentuated by strong side lighting with slight angle of incidence to ceiling or wall surface. May also be chemical incompatibility of joint compounds and paint system

Prevention
— Before painting with high gloss paint, apply skim coat of compound over entire surface (or use a spray on skim coat system)
— Consider where critical lighting is coming from and move if possible

Paint Sheen Variation

Description
— A differential in gloss levels over the whole area of the wall. This variation can be greater on nail holes and joints, and is highlighted by the use of semi and full gloss paints

Remedy
— Sand back and allow joint compound to fully dry before applying a sealer coat. Then apply correct paint system as per the manufacturer's instructions

Cause
— Nail holes and joints not sealed and undercoated correctly
— Joint compound not fully dry before paint application
— Burnish marks caused by rubbing or washing the wall
— Incorrect sealer used which does not equalise surface absorption of paper and compound

Prevention
— Use correct paint system and apply as per manufacturer's instructions

High Crowns

Description
— Joint area is higher than the surrounding plasterboard and may result in shadowing across the joints

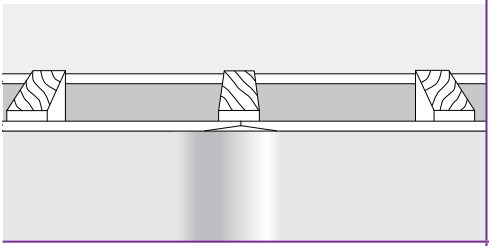

Remedy
— Sand joints to flush surface (take care to avoid scuffing paper or joint tape by over-sanding)

Cause
— Excessive compound over joint
— Compound not feathered out beyond shoulders
— Improper bedding of tape
— Framing out of alignment or sheet edges not tight against framing
— Improper adjustment of mechanical tools
— Misuse of, or worn, tools

Prevention
— Embed tape properly, using only enough compound to cover tape. Adequately feather compound

Tram Lines/Tracks

Description
— Shrinkage of the joint adjacent to the paper tape. Looks like the tape is visible on the joint

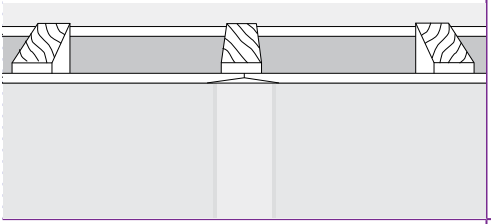

Remedy
— Lightly sand affected areas
— Apply a skim coat to the joint with an air drying compound, and sand and decorate

Cause
— The first coat of compound is not sufficiently dry before the second coat is applied. When the first coat dries it shrinks and pulls the tape back into the joint
— The second and top coat are too thin
— Compound is too thin or watery
— Inadequate drying between coats
— Poor drying conditions
— Slow drying due to excessive filling in one coat
— Premature paint application

Prevention
— Allow joint compound to fully dry between coats

Trim Defects

Description
— Cracks appearing at the edge of GIB® Goldline® Platinum trims

Remedy
— Remove all poorly bonded trims and reapply compound and trims as recommended

Cause
— Taping compound drying too fast, due to high temperatures and low humidity (or excessive drafts) or not enough compound
— Improper application, such as over-dilution of compound, use of wrong compound, excessive compound under tape, or no second coat over tape
— Cold, wet application resulting in poor bond

Prevention
— Do not install at temperatures below 10˚C. During cold weather, control heat at a minimum 10˚C and supply good ventilation. In hot, dry conditions, place shielding devices over room openings to prevent drafts. Do not apply joint treatment over hot surfaces. Lightly wet down floors if room humidity is too low
— Avoid practices listed under “Causes” opposite

Nail/Screw Pops

Description

— Protrusions or bumps directly over the nail/screw head
— Rupture of the surface around nail/screw head
— Looks like nail/screw head protruding above the surface of the board

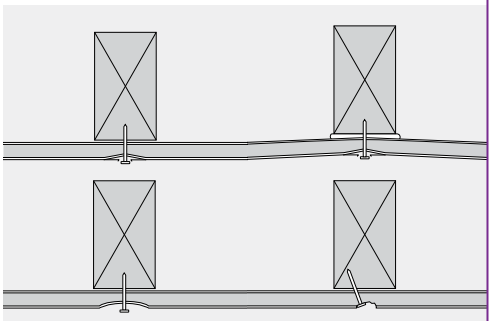

Remedy

— Nail pops that occur after at least one month's heating cycle are probably caused by timber shrinkage. Because further shrinkage is likely to occur and pops reappear, do not repair until the end of a heating season
— A screw should be reapplied 50mm from the popped fastener. Drive in a new fastener whilst applying firm pressure, to ensure firm contact with framing. Use a nail punch to seat the popped fastener beneath the surface of the plasterboard
— Remove compound. Apply two coats of setting compound followed by an air dry compound coat, then redecorate

Cause

— Timber shrinkage (timber shrinks as it dries, causing the fastener to protrude). Nail/screw pops may not become apparent for some considerable time after installation
— Fixing through glue – if screws or nails are applied through adhesive, a pop can occur as the glue dries and shrinks back; pulling the plasterboard closer to the framing member
— Plasterboard not held in close contact with the framing members. If the plasterboard is not held firmly against the stud while fixing, it increases the possibility of over-driving the nail (resulting in a blister-like defect the size of the hammerhead)
— Overdriven or skewed nails/screws can puncture the face paper, which results in no holding power
— Air trapped between the fixture and the compound, when the compound is placed
— Nail heads/screw heads puncturing face paper

Prevention

— Avoid timber shrinkage by using GIB® Rondo® metal ceiling battens for ceilings or kiln dried timber. Close in the building and protect the framing from the elements as soon as possible. Ensure that timber moisture content is 18% or less at the time of lining. Use of steel battens for large ceiling areas will eliminate shrinkage factors
— Fixing through glue – for walls, use nails/screws around the perimeter and GIBFix One® or GIBFix® All-Bond adhesive in the centre of the sheet. No mechanical fastener should be within 200mm of an adhesive daub. Never nail/screw through glue
— Plasterboard not in close contact with the framing members – when fixing ceilings, fix the centre of the plasterboard first. In all cases hold the plasterboard firm against the framing member whilst fixing
— Drive nails/screw in straight so they are neatly seated slightly below the surface of the sheet
— Apply compound in critical light areas by pressing the compound into the fixings, rather than trowelling it on. This removes trapped air

Peaking

Description
- A condition where joints are visible under critical lighting
- More prevalent when board has been installed in cold weather
- Often called ridging or beading
- Looks like a continuous ridge along the length of the joint, with a uniform peak-like pattern at the centre
- Commonly occurs in conjunction with 'nail popping'

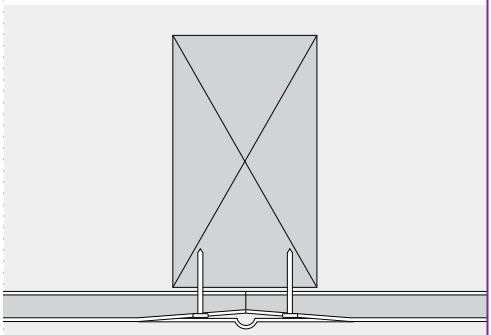

Remedy
- Ridges must only be repaired after a full heating cycle (6 months to a year). Mid-summer is generally the best time for rectifications
- Apply a coat of setting compound over the joints using a 300mm trowel to widen the joint. Scrape back and apply a light coat of a topping coat. Reseal affected area. Examine the surface with harsh lighting to determine whether the ridge has been concealed. If all right, then decorate

Cause
- Excessive gaps (i.e. over 2mm) left between sheets
- Timber movement due to excessive moisture content of timber at time of lining and subsequently drying out. This is more prevalent with 10mm plasterboard than thicker plasterboards
- No gaps at the base of wall sheets. This can cause pressure on the base of the sheets thus transferring tension to the joints
- Inadequate ventilation with concrete floor slabs, resulting in a build-up of water vapour

Prevention
- Use GIB® Rondo® metal ceiling battens on ceilings
- Ensure timber framing moisture content is 18% or less at time of lining
- Use a back blocking system on ceilings
- Gaps between sheets should be pre-filled with a setting compound and allowed to completely dry before application of tape and subsequent coats of compound
- Always allow a 5mm-10mm gap at the base of wall sheets to allow for shrinkage of the wall plates and studs
- Ensure compound materials are maintained at a minimum temperature of 10ºC during, and following, installation. Allow adequate ventilation

Peeling/Flaking, Severe Cracking

Description
- Large flakes that adhere loosely to the surface
- This problem is an extension of cracking and the causes and remedies are the same

Shrinkage

Description
- Compound shrinking back when it dries, causing a depression at the joint or on a fastener
- Looks like depressions at the joint

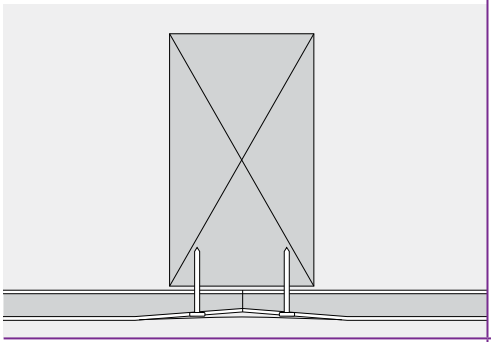

Remedy
- Lightly sand affected areas and apply air drying compound, then sand (using 220 grit or finer sand paper)
- Seal repaired areas and then re-decorate

Cause
- Compound too thin or watery
- Inadequate drying between coats
- Slow drying due to excessive filling in one coat
- Under slow drying conditions, joints and plasterboard may hold moisture for weeks

Prevention
- Provide proper drying conditions for compound. The two setting coats must be thoroughly dry prior to top coating. The top coat must be thoroughly dry prior to application of sealer
- Use compound at heaviest workable consistency and allow to stand for 2–3 minutes before applying
- In slow drying conditions apply a number of thinner coats rather than a few thick coats
- Under slow drying conditions use shorter set time joint compounds
- Allow joint compound to fully dry between coats

Paint Checking/Cracking

Description
- Small splits or star shape cracks on paint film surface

Remedy
- Remove paint allow joint compound to fully dry, repair any damage and reapply paint (as per manufacturer's instructions)

Cause
- Joint or topping compound not fully dry before paint application
- Paint not fully dried before next application
- Paint applied too thick
- Incorrect paint used

Wavy surfaces

Description
- Plasterboards are not flat but have a bowed, dished or undulating surface
- Studs or ceiling joists not on the same plane as other framing members
- A twisted framing member
- Shadows being cast across the joint
- Plasterboard forced into place

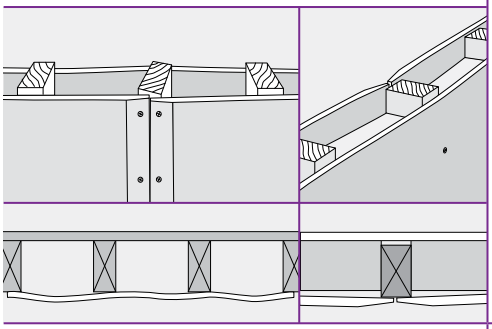

Remedy
- It is extremely difficult to rectify some of these problems without having to resort to full replacement of the linings after rectifying underlying factors
- Replace all warped or crooked studs

Cause
- Framing oversights
- Framing out of alignment with adjacent framing, making it difficult to bring the sheet into firm contact with framing members
- Excessive moisture in the timber framing can also cause warping, twisting or bowing as it dries
- Fixing the perimeter of the sheet prior to the centre
- Fixing of damp plasterboard
- Excessive loading from insulation or light fittings causing too much weight on plasterboard
- Incorrect placement of vapour barrier causing moisture build-up within the plasterboard
- Exceeding maximum span of fasteners when fixing
- Not allowing a 5mm–10mm gap between the floor and the plasterboard
- Incorrect fastening sequence for lining light gauge steel framing
- High temperatures in the ceiling space causing board expansion, particularly in skillion roofs with poor ventilation
- Incorrect storage – storing of plasterboard on edge on damp concrete floors

Prevention
- Timber members must be brought into alignment
- Check stud, batten and joist alignment, correcting wherever necessary
- Always fix from the centre outwards
- Sheets must be touch fitted and not forced into place

Fibre Raise Adjacent to Joint Areas

Description
— A shadow adjacent to the stopped area

Prevention
— Lightly sand between all coats

Cause
— Commonly encountered with spray applied sealer and top coats which have not been lightly sanded back between coats
— Also common where alkyd sealers are used and not sanded back before the application of top coats
— Excessive sanding of paper raising fibres

Compound Defects

Grit
— Small pieces of raw material or contaminant that show up when the compound is trowelled

Shrinkage
— The compound shrinks back into the joint when it dries. Caused by thick coats of compound, not allowing the compound to dry between coats and using incorrect mixing ratios

Seeding/Lumps
— Small lumps of hard compound that can form towards the end of a compounds working time. Can be due to contamination, over mixing, dirty tools, or particles of dry compound left in the mixing bowl

Inconsistent Set Time
— Setting compounds having a different set time to those stated on the bag. There are a number of probable causes including contamination, particles of dry compound left in the mixing bowl, variable water temperature, over mixing and re-working, as well as inappropriate product storage

Board Defects

Delamination
— Separation of the paper ply from the main body of the paper. Paper still adhered to the core with weak inter-ply bond.

Peeler
— Paper liner coming away cleanly from the core with no paper adhesion. Caused by calcinated (over dried) board. Also occurs when the plasterboard is damp

End Split
— Peeling or splitting 50mm–100mm from end of sheet
— Usually caused by soft board at the knives during the manufacture of plasterboard

Shoulder
— The thickness of the board at the inner edge of the taper is greater than that in the body of the board itself

Cupped or Hooked Edges
— Scalloped or hooked. Taper does not have regular profile
— Can be caused during manufacture or incorrect storage of the board edge on damp concrete surfaces

Soft Edges
— Soft core or calcinated due to over drying of the edge
— Damp due to storage on damp concrete surfaces

Blisters
— Intermittent splitting of the core and paper



FOR MORE INFORMATION VISIT

gib.co.nz

OR CALL THE GIB® HELPLINE

0800 100 442

6221M Mapei Tiling Solutions

Mapei Products (MBP (NZ) Ltd)
+64 09 9211994
enquiries@mapei.co.nz
www.mapei.co.nz

SUPPORTING DOCUMENTS

BRANZ Appraisal 484

Ref 10514. Uploaded 10 Aug 2020

Purpose: Performance

BRANZ Appraised

Appraisal No. 484 [2018]

MAPEGUM WPS, MAPELASTIC, MAPELASTIC SMART, MAPELASTIC TURBO AND MAPELASTIC AQUADEFENSE WET AREA MEMBRANES

Appraisal No. 484 (2018)

This Appraisal replaces BRANZ Appraisal No. 484 (2012)



BRANZ Appraisals

Technical Assessments of products for building and construction.

Mapei New Zealand Ltd

P O Box 12 326
Penrose
Auckland

Tel: 09 921 1994

Fax: 09 921 1993

Web: www.mapei.co.nz

BRANZ

1222 Moonshine Rd,
RD1, Porirua 5381
Private Bag 50 908
Porirua 5240,
New Zealand
Tel: 04 237 1170
branz.co.nz

Product

1.1 Mapegum WPS and Mapelastic AquaDefense are one component, liquid-applied waterproofing membranes for internal applications under ceramic or stone tile finishes.

1.2 Mapelastic, Mapelastic Smart and Mapelastic Turbo are two-component liquid applied waterproofing membranes suitable for internal applications on substrates under ceramic or stone tile finishes.

Scope

2.1 Mapegum WPS, Mapelastic, Mapelastic Smart, Mapelastic Turbo and Mapelastic AquaDefense Wet Area Membranes have been appraised for use as waterproofing membranes for the internal wet areas of buildings, within the following scope:

- on floor substrates of concrete, flooring grade particle board, plywood, compressed fibre cement sheet and fibre cement sheet tile underlay, and on wall substrates of concrete, concrete masonry, wet area fibre cement sheet lining systems and wet area plasterboard lining systems; and,
- when protected from physical damage by ceramic or stone tile finishes; and,
- where floors are designed and constructed such that deflections do not exceed 1/360th of the span.

2.2 The use of Mapegum WPS, Mapelastic, Mapelastic Smart, Mapelastic Turbo and Mapelastic AquaDefense Wet Area Membranes on concrete slabs where hydrostatic or vapour pressure is present is outside the scope of this Appraisal.

2.3 Movement and control joints in the substrate must be carried through the membrane and tile finish. The design and construction of the substrate and movement and control joints is specific to each building, and is therefore the responsibility of the building designer and building contractor and is outside the scope of this Appraisal.

2.4 The ceramic or stone tile finishes are outside the scope of this Appraisal.

2.5 The membranes must be installed by trained applicators, approved by Mapei New Zealand Ltd, to the conditions of the Technical Data Sheet (TDS) of the products.

Readers are advised to check the validity of this Appraisal by referring to the Valid Appraisals listing on the BRANZ website, or by contacting BRANZ.

Building Regulations

New Zealand Building Code (NZBC)

3.1 **In the opinion of BRANZ, Mapegum WPS, Mapelastic, Mapelastic Smart, Mapelastic Turbo and Mapelastic AquaDefense Wet Area Membranes if designed, used, installed and maintained in accordance with the statements and conditions of this Appraisal, will meet the following provisions of the NZBC:**

Clause B2 DURABILITY: Performance B2.3.1 (b) 15 years and B2.3.2. Mapegum WPS, Mapelastic, Mapelastic Smart, Mapelastic Turbo and Mapelastic AquaDefense Wet Area Membranes meet these requirements. See Paragraph 9.1.

Clause E3 INTERNAL MOISTURE: Performance E3.3.6. Interior wet area floors and walls incorporating Mapegum WPS, Mapelastic, Mapelastic Smart, Mapelastic Turbo and Mapelastic AquaDefense Wet Area Membranes will meet this requirement. See Paragraphs 11.1 - 11.7.

Clause F2 HAZARDOUS BUILDING MATERIALS: Performance F2.3.1. Mapegum WPS, Mapelastic, Mapelastic Smart, Mapelastic Turbo and Mapelastic AquaDefense Wet Area Membranes meet this requirement and will not present a health hazard to people.

Technical Specification

4.1 Materials supplied by Mapei New Zealand Ltd are as follows:

- **Mapegum WPS** - A one-part, fast drying, polymer-based, ready-to-use, liquid-applied membrane. It is supplied as a light grey-coloured paste in 5, 10 and 25 kg buckets.
- **Mapelastic** - A two-part, flexible, cementitious, liquid-applied membrane. It is supplied as a Part A powder in 24 kg multi-wall bags and a Part B liquid in 8 kg plastic containers. When dry, the membrane is grey in colour.
- **Mapelastic Smart** - A two-part, flexible, cementitious, liquid-applied membrane. It is supplied as a Part A powder in 20 kg multi-wall bags and a Part B liquid in 10 kg plastic containers. When dry, the membrane is light grey in colour.
- **Mapelastic Turbo** - A two-part, cementitious, liquid-applied membrane. It is supplied as a Part A powder in 20 kg multi-wall bags and a Part B liquid in 16 kg containers. When dry, the membrane is light grey in colour.
- **Mapelastic AquaDefense** - A one-part solvent free, ultra-quick drying synthetic resin based paste in water dispersion liquid applied membrane. It is supplied as a light blue coloured paste in 15 kg drums.
- **Mapeband and Mapeband Gaskets** - A rubber-coated polyester tape for waterproofing expansion joints and sealing around drains and pipes. Available as a tape 120 mm wide in rolls 50 m long, and also in ready-made internal and external corners (90 and 270 degrees) and pipe gaskets 118 x 118 mm and 300 x 300 mm, "T" profiles 515 mm x 315 mm and cross profiles 515 x 515 mm.
- **Mapeband PE120** - A PVC fabric tape used to reinforce wall/wall and floor/wall joints. It is only used with Mapegum WPS and Mapelastic AquaDefense. Available as a tape 120 mm wide in rolls 10 m and 50 m long, and also as preformed angles 90° and 270°.
- **Mapetex Sel** - A macro-holed non-woven fabric, used to reinforce the first and second layer of the waterproofing membranes. It is supplied as a polypropylene, white fabric in rolls 100 mm, 200 mm and 1.0 m wide x 25 m long.
- **Mapenet 150** - A glass fibre mesh used to reinforce the membranes. It is supplied as a blue mesh in rolls 1.0 m wide and 50 m long.
- **Mapeband SA** - A self-adhesive Butyl Rubber tape used to reinforce all joints. It is supplied as a 2.0 mm thick, 100 mm wide tape in rolls 25 m long.
- **Mapei Primer 3296** - A acrylic primer for absorbent surfaces. It is an opaque colour and supplied in 5 and 10 kg drums.

Readers are advised to check the validity of this Appraisal by referring to the Valid Appraisals listing on the BRANZ website, or by contacting BRANZ.

Handling and Storage

5.1 All materials must be stored inside, up off concrete floors, in dry conditions, out of direct sunlight and out of freezing conditions. The membrane products have a shelf life of 24 months from date of manufacture in the original unopened packaging. Once opened, the products must be used within 3 months.

Technical Literature

6.1 Refer to the Appraisals listing on the BRANZ website for details of the current Technical Literature for the Mapegum WPS, Mapelastic, Mapelastic Smart, Mapelastic Turbo and Mapelastic AquaDefense Wet Area Membranes. The Technical Literature must be read in conjunction with this Appraisal. All aspects of design, use, installation and maintenance contained in the Technical Literature and within the scope of this Appraisal must be followed.

Design Information

General

7.1 Mapegum WPS, Mapelastic, Mapelastic Smart, Mapelastic Turbo and Mapelastic AquaDefense Wet Area Membranes are for use in buildings where an impervious waterproof membrane is required to floors and walls to prevent damage to building elements and adjoining areas.

7.2 Mapegum WPS and Mapelastic AquaDefense are designed to be used where a one-component product is preferred.

7.3 The membranes must be protected from physical damage by the application of ceramic or stone tile finishes.

7.4 Movement and control joints may be required depending on the shape and size of the building or room, and the tile finish specified. Design guidelines can be found in the BRANZ Good Practice Guide - Tiling.

7.5 Timber framing must comply with NZS 3604, or where specific engineering design is used, the framing shall be of at least equivalent stiffness to the framing provisions of NZS 3604, or comply with the serviceability criteria of AS/NZS 1170. In all cases framing must be provided so that the maximum span of the substrate as specified by the substrate manufacturer is met and all sheet edges are fully supported. Timber framing systems supporting the substrates must be constructed such that deflections do not exceed 1/360th of the span. Where NZS 3604 is used, the allowable joist spans given in Table 7.1 shall be reduced by 20%.

Substrates

Plywood

8.1 Plywood must be a minimum of 17 mm thick complying with AS/NZS 2269, CD Grade Structural with sanded C face upwards and treated to H3 (CCA treated). LOSP treated plywood must not be used.

8.2 The plywood must be laid with the face grain at right angles to the floor joists. The plywood must be supported with dwangs or framing with a maximum span of 400 mm in each direction, fixed with 10g x 50 mm stainless steel countersunk head screws at 150 mm centres along the sheet edges and 200 mm through the body of the sheets.

Fibre Cement Compressed Sheet/Fibre Cement Sheet Tile Underlay

8.2 Fibre cement compressed sheet and tile underlay must be manufactured to comply with the requirements of AS/NZS 2908.2 and must be specified by the manufacturer as being suitable for use as a wet area substrate. Installation must be in accordance with the instructions of the manufacturer.

Particleboard

8.3 Particleboard must be specified for the end use in accordance with NZS 3602.

Readers are advised to check the validity of this Appraisal by referring to the Valid Appraisals listing on the BRANZ website, or by contacting BRANZ.

Concrete and Concrete Masonry

8.4 Concrete and concrete masonry substrates must be to a specific engineering design meeting the requirements of the NZBC, such as concrete construction to NZS 3101, concrete slab-on-ground to NZS 3604 or NZS 4229 and concrete masonry to NZS 4229 and NZS 4230.

Wet Area Wall Linings

8.5 Plasterboard wall linings must be manufactured to comply with AS/NZS 2588, and be suitable for use in internal wet areas.

8.6 Fibre cement sheet must be suitable for use in wet areas and comply with AS/NZS 2908.2.

8.7 Installation of plasterboard or fibre cement wall linings must be carried out in accordance with the instructions of the manufacturer.

Durability

Serviceable Life

9.1 The Mapegum WPS, Mapelastic, Mapelastic Smart, Mapelastic Turbo and Mapelastic AquaDefense Wet Area Membranes, when subjected to normal conditions of environment and use, are expected to have a serviceable life of at least 15 years and be compatible with ceramic or stone tile finishes with a design service life of 15-25 years.

Maintenance

10.1 No maintenance of the membranes will be required provided significant substrate movement does not occur and the tile finish remains intact. Regular checks must be made of the tiled areas to ensure they are sound and will not allow moisture to penetrate. Any cracks or damage must be repaired immediately by repairing the tiles, grout and sealant.

10.2 In the event of damage to a membrane, the tiles must be removed and the membrane repaired by removing the damaged portion and applying a patch with sufficient overlap over the damaged section.

10.3 Drainage outlets must be maintained to operate effectively, and tile finishes must be kept clean.

Internal Moisture

11.1 Mapegum WPS, Mapelastic, Mapelastic Smart, Mapelastic Turbo and Mapelastic AquaDefense Wet Area Membranes are impervious to water and when appropriately designed and installed will avoid the likelihood of water penetrating behind linings or entering concealed spaces.

11.2 Surfaces must be finished with ceramic or stone tiles. A means of compliance with NZBC Clause E3.3.3 and E3.3.4 is given in NZBC Acceptable Solution E3/AS1, Paragraph 3.1.1 (b), 3.1.2 (b) and 3.3.1 (b).

11.3 Falls in showers and shower areas must be a minimum of 1 in 50. In unenclosed showers, falls must extend a minimum of 1500 mm out from the shower rose. Floor wastes and drainage flanges must be provided and the floor must fall to the outlet.

11.4 Mapegum WPS, Mapelastic, Mapelastic Smart, Mapelastic Turbo and Mapelastic AquaDefense Wet Area Membranes are suitable for use to contain accidental overflow to meet NZBC Clause E3.3.2. A means of compliance for overflow is given in NZBC Acceptable Solution E3/AS1, Paragraph 2.

11.5 The waterproofing membrane must completely cover shower bases, and for unenclosed showers it must extend a minimum of 1500 mm out from the shower rose. Further design guidance on waterproofing wet areas, including waterproofing walls and junctions can be obtained from AS 3740, the BRANZ Good Practice Guide - Tiling, and flooring and wall lining manufacturers.

11.6 Where water resistant wall finishes such as prefinished sheet materials are used they must be installed as per the NZBC requirements. They must flash over the membrane a minimum of 30 mm.

11.7 BRANZ recommends the entire floor be covered by a waterproof membrane for bath, shower and spa rooms where timber and plywood floors are used.

Readers are advised to check the validity of this Appraisal by referring to the Valid Appraisals listing on the BRANZ website, or by contacting BRANZ.

Installation Information

Installation Skill Level Requirement

12.1 Installation of the membranes must be completed by trained applicators approved by Mapei New Zealand Ltd

12.2 Installation of substrates must always be carried out in accordance with the Mapegum WPS, Mapelastic, Mapelastic Smart, Mapelastic Turbo and Mapelastic AquaDefense Wet Area Membranes Technical Literature and this Appraisal by, or under the supervision of, a Licensed Building Practitioner (LBP) with the relevant Licence Class.

Preparation of Substrates

13.1 Substrates must be dry, clean and stable before installation commences. Surfaces must be smooth and free from nibs, sharp edges, dust, dirt or other materials such as oil, grease or concrete formwork release agents.

13.2 The relative humidity of concrete substrates must be 75% or less before membrane application. The concrete substrates can be checked for dryness by using a hygrometer as set out in BRANZ Bulletin No. 585.

13.3 All voids, cracks, holes, joints and excessively rough areas must be filled to achieve an even and uniform surface. Junctions of substrate abutments, such as at wall/floor and wall/wall junctions must have a reinforcement installed as set out in the Technical Literature.

13.4 Refer to the product manufacturer for correct priming requirements.

Membrane Installation

14.1 Installation must not be undertaken where the substrate surface temperature is below 8°C or above 35°C.

14.2 Mapelastic, Mapelastic Turbo and Mapelastic Smart require the liquid and powder to be mixed and left to stand for 5 minutes before re-mixing, then applying. Mapegum WPS and Mapelastic AquaDefense must be thoroughly stirred before application.

14.3 The membrane must be applied in a minimum of two coats at the rates set out in the Technical Literature. Subsequent coats must be applied in an opposite direction to the previous coat. The total finished system thickness of the Mapegum WPS must be a minimum of 1.0 mm, Mapelastic AquaDefense membrane must be a minimum of 1.0 mm and the Mapelastic, Mapelastic Turbo and Mapelastic Smart Membranes must be a minimum of 2.0 mm.

14.4 Application can be made by roller (medium/long nap), brush (long bristle), or a notched steel trowel (finished with a flat steel trowel).

14.5 Reinforcement fabric or Mapeband is bedded into the wet layer between coats to provide movement protection at wall/wall and wall/floor junctions, or any other areas such as joints in the flooring substrate, floor cracks, or around penetrations in the membrane. In all other situations, reinforcement provisions as set out in this Appraisal and the Technical Literature apply.

14.6 Clean up may be undertaken with water.

14.7 For further information refer to the product TDS.

Tiling

15.1 The membranes must be fully cured before tiling. The cured membranes must be protected at all times to prevent mechanical damage, so may require temporary covers until the finishing is completed.

15.2 Tiling must be undertaken in accordance with AS 3958.1 and the BRANZ Good Practice Guide - Tiling. The compatibility of the tile adhesive must be confirmed with the adhesive manufacturer or Mapei New Zealand Ltd.

Readers are advised to check the validity of this Appraisal by referring to the Valid Appraisals listing on the BRANZ website, or by contacting BRANZ.

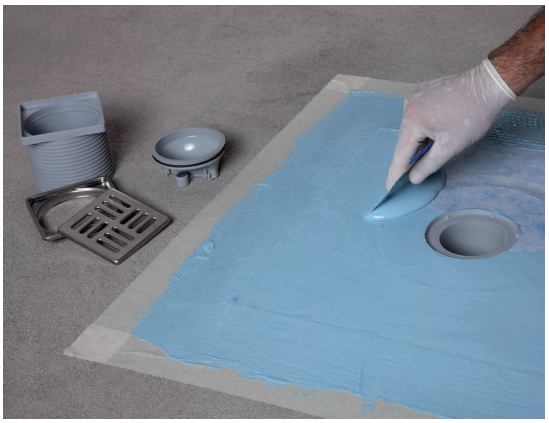

Impregnating Drain Vertical fabric with Mapelastic AquaDefense



Application of Mapeband to a wall-floor joint with Mapelastic AquaDefense



Application of the first coat of Mapelastic AquaDefense



Application of the second coat of Mapelastic AquaDefense

Readers are advised to check the validity of this Appraisal by referring to the Valid Appraisals listing on the BRANZ website, or by contacting BRANZ.

Inspections

16.1 The Technical Literature must be referred to during the inspection of membrane installations.

16.2 Critical areas of inspection are:

- Construction of substrates, including crack control and installation of bond breakers and movement control joints.
- Moisture content of the substrate prior to the application of the membrane.
- Acceptance of the substrate by the membrane installer prior to application of the membrane.
- Installation of the membrane to the manufacturer's instructions, particularly installation to the correct thickness and use of reinforcement.
- Membrane curing and integrity prior to the installation of tiles including protection from mechanical damage during curing and prior to tile installation.

Health and Safety

17.1 Safe use and handling procedures for the membranes are provided in the Technical Literature. The materials must be used in conjunction with the relevant Material Safety Data Sheet.

Basis of Appraisal

The following is a summary of the technical investigations carried out:

Tests

18.1 The following testing has been undertaken by various organisations:

- Mapegum WPS and Mapelastic Wet Area Membranes in accordance with; EN 14891 for initial tensile adhesion strength, tensile strength after water contact, tensile adhesion strength after heat ageing, tensile adhesion strength after contact with lime water, tensile adhesion strength after contact with chlorine water, tensile adhesion strength after freeze-thaw cycles, waterproofing and crack bridging ability; DIN 53504 for tensile strength and maximum elongation after exposure to air and water immersion (Mapegum WPS only) and; Mapei internal method for water absorption after exposure and water immersion.
- Mapelastic Smart in accordance with EN 1502-4 for bond strength to concrete, freeze thaw, flexibility, static and dynamic crack bridging, water vapour permeability, impermeability to water and bond strength after water immersion, heat ageing, freeze-thaw and alkali ageing.
- Mapelastic in accordance with; EN 14891 for crack bridging after 28 days exposure to air, crack bridging after 7 days exposure to air and 21 days immersion in water, adhesion to concrete surface after 28 days exposure to air, adhesion to concrete surface after 28 days exposure to air and 21 days immersion in water; DIN 52615 for resistance to water vapour transmission and; Mapei internal method for deformability under low temperatures.
- Mapegum WPS in accordance with; EN 1384 for tensile adhesion strength after exposure and water immersion; UNI 8202/22 for water absorption after exposure and water immersion and; DIN 53505 for shore A hardness.
- Mapelastic AquaDefense in accordance with AS/NZS 4858 Appendix A including effect of heat ageing, bleach, detergent and water on tensile and elongation, water vapour transmission to ASTM E96-92 and cyclic movement resistance requirements of AS/NZS4858:2004 Appendix B. Testing to ANSI 118.10-1999 including seam strength, breaking strength, dimensional stability, resistance to fungi, static head and shear strength to ceramic tile and cement mortar. Also tensile adhesion on a plywood substrate and low temperature flexibility of the membrane.
- Mapelastic Turbo in accordance with EN1504-2 and EN14891 for water vapour permeability, capillary adsorbtion and permeability to water, permeability to water, freeze-thaw cycling, crack-bridging ability, pull off adhesion and bond strength. Also tensile adhesion on a plywood substrate.

18.2 The above test methods and results have been reviewed by BRANZ and found to be satisfactory.

Readers are advised to check the validity of this Appraisal by referring to the Valid Appraisals listing on the BRANZ website, or by contacting BRANZ.

18.3 Testing of Mapegum WPS and Mapelastic has been undertaken by BRANZ for durability in accordance with AS/NZS 4858: 2004, Appendix A covering tensile strength and elongation after immersion in water, bleach, detergent, and after heat ageing.

18.4 Testing for suitability of Mapelastic over particleboard in accordance with AS/NZS 4858: 2004, Appendix C has been undertaken by BRANZ and found to be satisfactory.

Other Investigations

19.1 An assessment was made of the durability of the Mapegum WPS, Mapelastic, Mapelastic Smart, Mapelastic Turbo and Mapelastic AquaDefense Wet Area Membranes by BRANZ technical experts.

19.2 Site inspections have been carried out by BRANZ to examine the practicability of installation and to examine completed installations.

19.3 The Technical Literature has been examined by BRANZ and found to be satisfactory.

Quality

20.1 The manufacture of the membranes has not been examined by BRANZ, but details regarding the quality and composition of the materials used were obtained by BRANZ and found to be satisfactory.

20.2 The quality management system of the membranes manufacturer has been assessed and found to be satisfactory.

20.3 The quality of supply of the membrane system materials to the market is the responsibility of Mapei New Zealand Ltd.

20.4 Quality on site is the responsibility of the Mapei New Zealand Ltd trained applicators.

20.5 Designers are responsible for the building design, and building contractors are responsible for the quality of installation of the framing systems and substrates.

20.6 Building owners are responsible for the maintenance of the ceramic or stone tiles in accordance with the instructions of Mapei New Zealand Ltd.

Sources of Information

- AS/NZS 1170: 2002 Structural design actions.
- AS/NZS 2908.2: 2000 Cellulose-cement products – Flat sheet.
- AS/NZS 2269: 2012 Plywood-Structural.
- AS 3958.1: 2007 Guide to the installation of ceramic tiles.
- AS/NZS 4858: 2004 Wet area membranes.
- DIN 53504 May 1994 Determination of tensile stress/strain properties of rubber.
- EN 1348: 1997/A1 Adhesives for tiles – Determination of tensile adhesion strength for cementitious adhesives.
- EN 14891 March 2003 Liquid applied waterproofing membranes for use beneath ceramic tiling – Definitions, specifications and test methods.
- NZS 3101: 2006 The design of concrete structures.
- NZS 3602: 2003 Timber and wood-based products for use in buildings.
- NZS 3604: 2011 Timber-framed buildings.
- NZS 4229: 2013 Concrete masonry buildings not requiring specific engineering design.
- NZS 4230: 2004 Code of Practice for the design of masonry structures.
- Ministry of Business, Innovation and Employment Record of amendments - Acceptable Solutions, Verification Methods and handbooks.
- The Building Regulations 1992.
- Good Practice Guide - Tiling, BRANZ, April 2015.
- UNI 8202 – 22: 1987 Building. Water proof sheets. Determination of behaviour in water.

Readers are advised to check the validity of this Appraisal by referring to the Valid Appraisals listing on the BRANZ website, or by contacting BRANZ.

BRANZ

In the opinion of BRANZ, Mapegum WPS, Mapelastic, Mapelastic Smart, Mapelastic Turbo and Mapelastic Aquadefense Wet Area Membranes are fit for purpose and will comply with the Building Code to the extent specified in this Appraisal provided they are used, designed, installed and maintained as set out in this Appraisal.

The Appraisal is issued only to Mapei New Zealand Ltd, and is valid until further notice, subject to the Conditions of Appraisal.

Conditions of Appraisal

1. This Appraisal:
   a) relates only to the product as described herein;
   b) must be read, considered and used in full together with the Technical Literature;
   c) does not address any Legislation, Regulations, Codes or Standards, not specifically named herein;
   d) is copyright of BRANZ.
2. Mapei New Zealand Ltd:
   a) continues to have the product reviewed by BRANZ;
   b) shall notify BRANZ of any changes in product specification or quality assurance measures prior to the product being marketed;
   c) abides by the BRANZ Appraisals Services Terms and Conditions;
   d) warrants that the product and the manufacturing process for the product are maintained at or above the standards, levels and quality assessed and found satisfactory by BRANZ pursuant to BRANZ's Appraisal of the product.
3. BRANZ makes no representation or warranty as to:
   a) the nature of individual examples of, batches of, or individual installations of the product, including methods and workmanship;
   b) the presence or absence of any patent or similar rights subsisting in the product or any other product;
   c) any guarantee or warranty offered by Mapei New Zealand Ltd.
4. Any reference in this Appraisal to any other publication shall be read as a reference to the version of the publication specified in this Appraisal.
5. BRANZ provides no certification, guarantee, indemnity or warranty, to Mapei New Zealand Ltd or any third party.

For BRANZ

Chelydra Percy
Chief Executive

Date of Issue:
09 February 2018

Readers are advised to check the validity of this Appraisal by referring to the Valid Appraisals listing on the BRANZ website, or by contacting BRANZ.

7112 Water Storage Tanks

Devan Tanks Brochure

Ref 21098. Uploaded 26 Feb 2021

Purpose: Performance

Devan Tanks Installation & Maintenance Guide

Ref 21099. Uploaded 26 Feb 2021

Purpose: Installation

DEVAN TANKS



PROUDLY
MADE IN TAURANGA
SINCE 1992



Devan Tanks are developed, designed and produced to the highest standards for New Zealand conditions.

www.devan.co.nz

WHY CHOOSE DEVAN?

Devan pioneered New Zealand's first large volume plastic water tank with the first development starting in the late 1980's.

Since then Devan has gone on to develop a full range of water tanks, septic tanks, wastewater systems and key accessories to assist with all your water based needs.

Devan Tanks are only manufactured from the highest quality polyethylene which is ideally suited to our moulding technique giving long life and trouble free service.

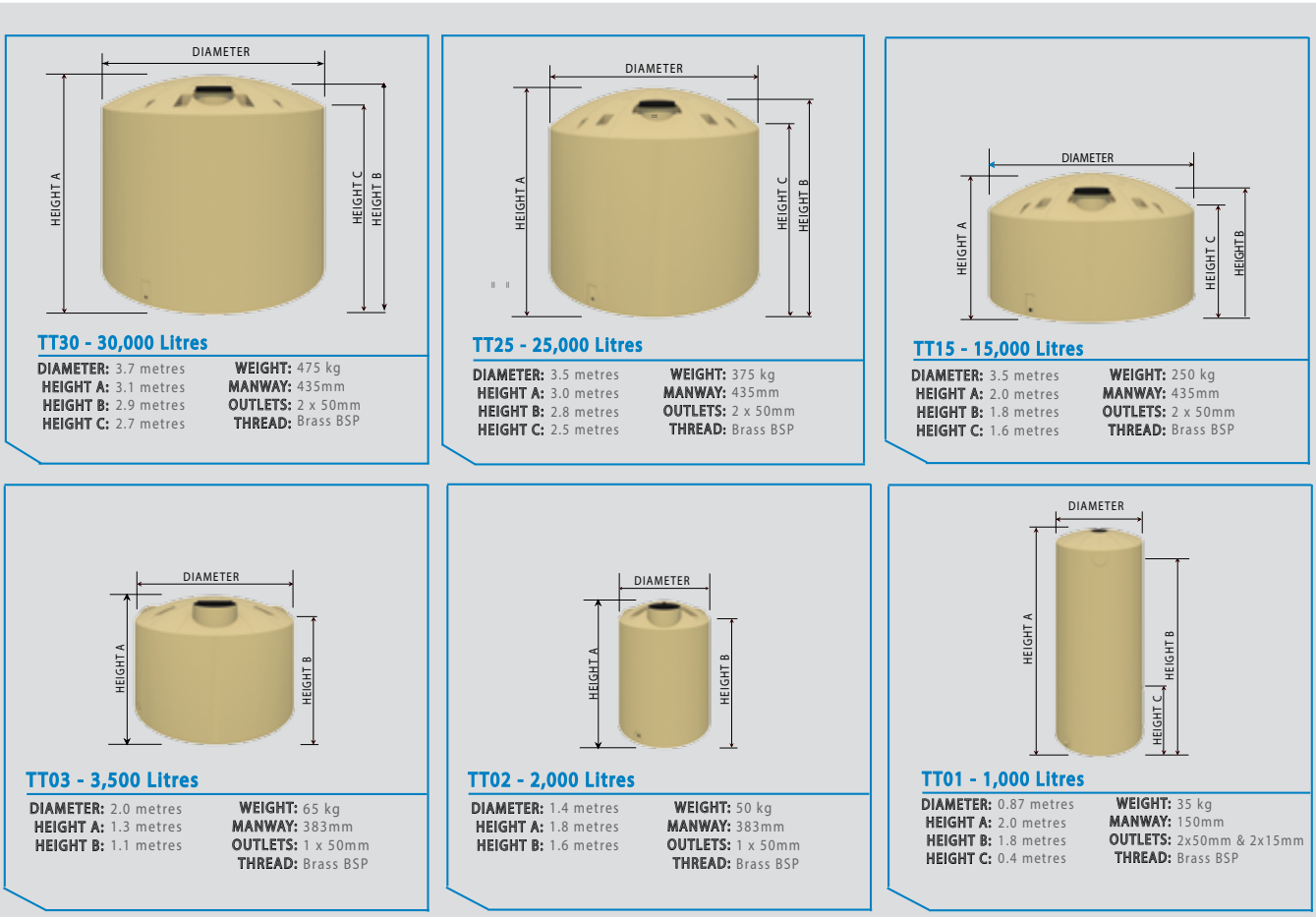

TT30 - 30,000 Litres

DIAMETER: 3.7 metres
HEIGHT A: 3.1 metres
HEIGHT B: 2.9 metres
HEIGHT C: 2.7 metres
WEIGHT: 475 kg
MANWAY: 435mm
OUTLETS: 2 x 50mm
THREAD: Brass BSP

TT25 - 25,000 Litres

DIAMETER: 3.5 metres
HEIGHT A: 3.0 metres
HEIGHT B: 2.8 metres
HEIGHT C: 2.5 metres
WEIGHT: 375 kg
MANWAY: 435mm
OUTLETS: 2 x 50mm
THREAD: Brass BSP

TT15 - 15,000 Litres

DIAMETER: 3.5 metres
HEIGHT A: 2.0 metres
HEIGHT B: 1.8 metres
HEIGHT C: 1.6 metres
WEIGHT: 250 kg
MANWAY: 435mm
OUTLETS: 2 x 50mm
THREAD: Brass BSP

TT03 - 3,500 Litres

DIAMETER: 2.0 metres
HEIGHT A: 1.3 metres
HEIGHT B: 1.1 metres
WEIGHT: 65 kg
MANWAY: 383mm
OUTLETS: 1 x 50mm
THREAD: Brass BSP

TT02 - 2,000 Litres

DIAMETER: 1.4 metres
HEIGHT A: 1.8 metres
HEIGHT B: 1.6 metres
WEIGHT: 50 kg
MANWAY: 383mm
OUTLETS: 1 x 50mm
THREAD: Brass BSP

TT01 - 1,000 Litres

DIAMETER: 0.87 metres
HEIGHT A: 2.0 metres
HEIGHT B: 1.8 metres
HEIGHT C: 0.4 metres
WEIGHT: 35 kg
MANWAY: 150mm
OUTLETS: 2x50mm & 2x15mm
THREAD: Brass BSP

OUR 20 YEAR GUARANTEE

Devan Tanks offers a no nonsense 20 year guarantee on all our domestic water tanks. Our tanks are manufactured to the highest standards utilising advanced technology and production procedures. Full installation guides are available to ensure your installation meets the warranty conditions.



MOULDED OUTLETS

Devan Tanks are the only tank that comes with brass (or stainless steel) moulded in outlets. Having metal outlets allows for an easy plumb that is solid and eliminates any risk of cross threading. Better yet, our big tanks come with two of them as standard!

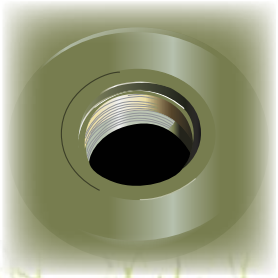

Devan Colours	Dark Green	Olive Green	Mist Green	Black	Beige	Birch Grey	Light Grey	Slate Grey	Mountain Blue	White	Clay Brown
Colorsteel Colours	Permanent Green	Karaka	Mist Green	Ebony	Desert Sand	Cloud	Gull Grey	Iron Sand	Denim Blue	White	Lignite

Please note that the colours represented above are the best match possible within screen and printing variations. Colorsteel colours are a guide only not colour matches.

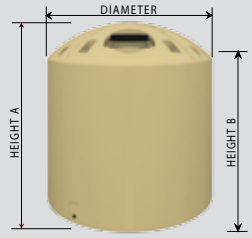

TT10 - 10,000 Litres

DIAMETER: 2.5 metres
HEIGHT A: 2.6 metres
HEIGHT B: 2.2 metres
WEIGHT: 225 kg
MANWAY: 435mm
OUTLETS: 2 x 50mm
THREAD: Brass BSP

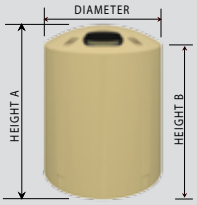

TT05 - 5,500 Litres

DIAMETER: 1.9 metres
HEIGHT A: 2.3 metres
HEIGHT B: 2.0 metres
WEIGHT: 112.5 kg
MANWAY: 435mm
OUTLETS: 1 x 50mm
THREAD: Brass BSP

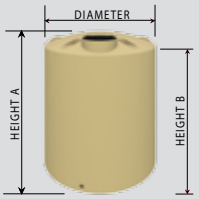

TT04 - 4,000 Litres

DIAMETER: 1.7 metres
HEIGHT A: 1.9 metres
HEIGHT B: 1.8 metres
WEIGHT: 75 kg
MANWAY: 383mm
OUTLETS: 1 x 50mm
THREAD: Brass BSP

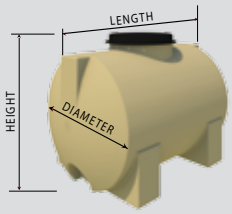

TT007 - 750 Litres

LENGTH: 1.3 metres
HEIGHT: 1.0 metres
DIAMETER: 0.9 metres
WEIGHT: 30 kg
MANWAY: 435mm

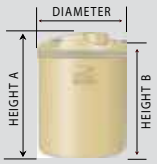

TT006 - 600 Litres

DIAMETER: 0.86 metres
HEIGHT A: 1.2 metres
HEIGHT B: 1.1 metres
WEIGHT: 20 kg
MANWAY: 190mm
OUTLET: 1 x 50mm
THREAD: Brass BSP

FREE DELIVERY
ALL SIZES WITHIN NORTH ISLAND

CERTIFIED VPLAS MATERIAL

CERTIFIED MATERIAL

Devan Tanks are manufactured from the highest quality food grade polyethylene which is ideally suited to our moulding technique giving long life and trouble free service. Polyethylene cannot rot or corrode, and is ultra violet stabilised for New Zealand's harsh environmental conditions. It will not leach or taint your drinking water.

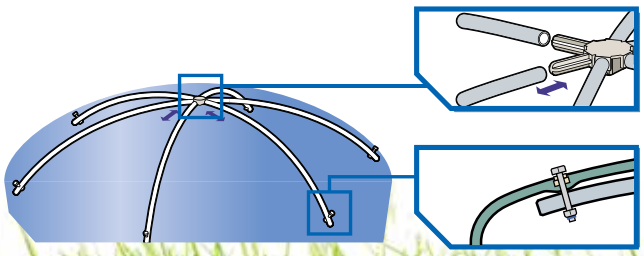

SUPER-STRONG DOME

The unique Devan Spaceframe provides for maximum strength in the dome of your tank which means it won't pop in when you are installing or servicing your tank nor will extreme snow loading have an effect. (Large tanks only)

ACCESSORIES

Devan have carefully selected a few key accessories to assist with your water collection, storage and use needs. Give some thought to what you may need to go with your tank and talk to one of the friendly team when ordering.








- First flush diverters
- Leaf/debris diverters
- Level indicators/gauges
- Plumbing kits
- Water pumps
- Pump Covers
- Uniseals
- UV systems
- Overflow kits
- Tank vents
- Float valves
- Connector kits

DEVAN TANKS

Tauranga Factory & Sales
PO Box 2602
125 Birch Avenue
Tauranga
Phone: 07 578 8726
Free Phone: 0800 338 268
Email: tauranga@devan.co.nz

Buy online or find more information @ www.devan.co.nz

DEVAN

Installation & Maintenance Guide

Devan Water Tanks



Please read these guidelines before installation begins.

Failure to properly prepare and install your tank correctly or continue with ongoing maintenance will void your warranty.

V1.1

CONTENTS

DELIVERY OF YOUR DEVAN TANK	Page 3
FOUNDATION AND LOCATION	Page 4
BOTTOM OUTLET PLUMBING GUIDELINES	Page 6
TOP PLUMBING	Page 8
WATER PUMP INSTALLATION	Page 10
WARRANTY POLICY	Page 11
WATER TANK DIMENSIONS	Page 14
CLEANING AND MAINTENANCE	Page 17
WARRANTY REGISTRATION	Page 20

Devan Water Tanks. Made in New Zealand for New Zealand Conditions!

In order to gain maximum benefit from your Devan water tank, we have outlined the following instructions for installation and setup. Please read all these instructions carefully before installing your tank. The tank warranty will be void if the installation instructions are not adhered to.

DELIVERY OF YOUR DEVAN TANK

Devan water tanks are delivered by road to your gate. Transportation to the actual site and installation is the risk and responsibility of the purchaser. Where there is easy and suitable road access, our drivers may agree to off-load closer to the installation site, however this will be at the purchaser's risk. On arrival please make sure that somebody is available to help our drivers off-load your tank.

Our drivers will phone the person nominated at the time of order on the morning of delivery to confirm details. They will advise an approximate delivery time. If the driver is unable to get hold of the nominated contact person, the tank will be off-loaded at the most convenient location at the site and it will be the purchasers responsibility to relocate the tank at their risk and responsibility.

If you have special access issues, please make sure these are made known either to the Devan sales team or to the driver. Examples of such issues include truck only access in tight spaces, farm gate entry as opposed to main driveway or tanker track entry or no wet weather access.



FOUNDATION AND LOCATION

A full Devan tank is extremely heavy (up to 30 tonnes). Be thoughtful in selecting your tank location.

When installing the Devan tank, choose a firm and level area that is free from any projections. Elevated locations must have a solid floor and be strong enough to withstand wind loads in conjunction with the weight of a full tank.

A level foundation is required for tanks 5,000 litres and larger. Concrete, quarry fines (<7mm), pumice and sand are all suitable.

Sand is the recommended option. The sand base needs to be 100mm deep, 500mm greater than the tank diameter and most importantly, free from any sharp objects or projections such as rocks, roots or stones.

The sand base must be retained at all times. Pipe tank overflow well clear of the sand base to ensure overflowing water does not aid erosion.

In high wind areas such as hilltops, the Devan tank can be secured to the ground using all four lifting lugs. Do not overtighten the tie-downs or damage will result.

Devan water tanks are not designed for in-ground installation but can be buried up to 500mm and back filled with clean fill. If further depth is required tanks must not be buried any further than a maximum of 1000mm below ground level keeping a free space of at least 500mm around the tank. This space should have drainage installed and the gap filled with bark so it is not a trap hazard for small animals or children.

Devan tanks can be recessed into banks or similar, providing the tank is not backfilled against and there is free space of at least 500mm around the tank.

Do not install water tanks over buried pipes, cables or any other utility connections which may require servicing or maintenance.

Do not install water tanks over underground structures such as cellars, septic tanks, sewage canals, etc.

Do not install water tanks where they could pose a potential hazard to life or property. eg under foundations or within a building.

FOUNDATION AND LOCATION - CONTINUED

In areas prone to rabbit or other burrowing animals it is advisable to bury wire mesh to a depth of at least 600mm in a narrow trench around the foundation parameter.

In areas where livestock have access to the tank, the area surrounding the tank should be fenced to a minimum of 1.0 metre from the tank, to avoid any damage to the tank wall or outlet fittings.

Where the tank needs to be lifted into place, all four lifting eyes must be used in doing so. The lifting eyes are not rated sufficiently to be used with any water in the tank.

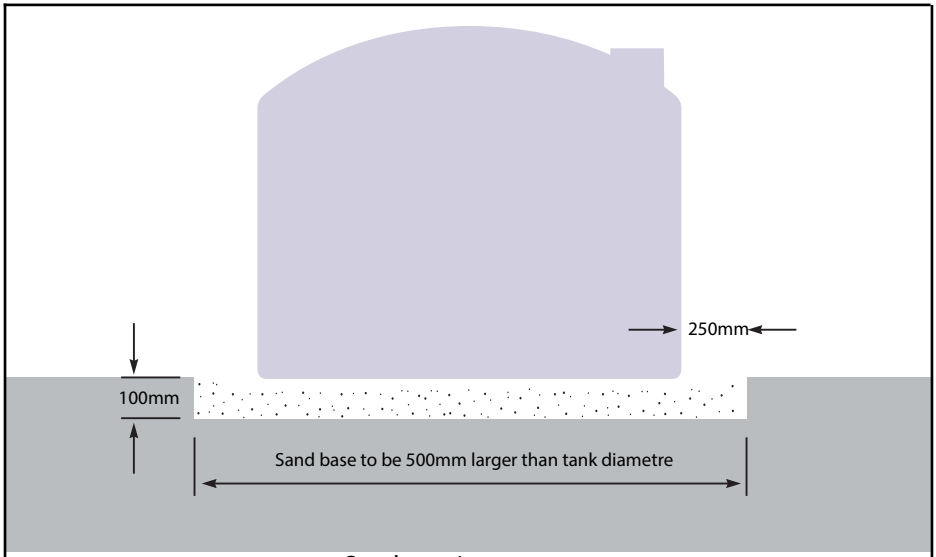

Sand requirements

30,000L	1.4m3
25,000L	1m3
15,000L	1m3
10,000L	0.75m3
5,000L	0.50m3

BOTTOM OUTLET PLUMBING GUIDELINES

Bungs are screwed in loosley for transport only. If used permanently, please remove the bung and Teflon tape the threads and screw back in. Do not overtighten the bungs if they are to be refitted. This procedure must be completed before filling the tank.

Because polyethylene water tanks expand when full, plumbing to the tank must be flexible. Tanks will expand 30 to 40mm from new when filled for the first time. Tanks will contiune to expand up to 100mm over their life span.

All plumbing attached to the bottom of the tank must be done correctly with all base connections flexible and free from stress. Plumbing kits are recommended and are available from Devan in 25mm, 32mm and 50mm sizes.

Polyethylene pipe does not constitute flexible plumbing. Flexi-hose needs to be used to provide sufficient flexibility.

No extra penetrations are to be cut into the walls of the tank without written approval of the manufacturer. Doing so will seriously affect the structural integrity of the tank and could lead to premature failure.

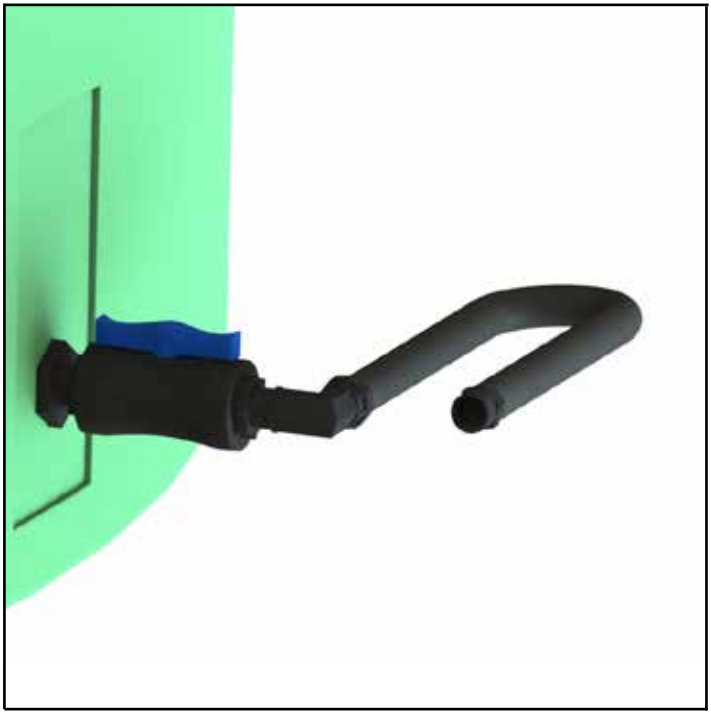

25mm Plumbing Kit - TAKPL25

BOTTOM OUTLET PLUMBING GUIDELINES - CONTINUED

There are specially designed mounting areas on the wall of the tank for outlet plumbing with brass fittings moulded-in for extra plumbing strength. These fittings are pre-drilled and tapped ready for use. These moulded-in fittings are raised off the bottom of the tank to prevent sludge pick-up and to retain sufficient weight (up to approx. one tonne in large tanks) making the tank more stable in exposed areas.

It is not recommended to install tank fittings anywhere else in the tank wall as this will create a stressed point in the tank structure and void the warranty. If an outlet fitting is required at a specific level, connect an internal vertical pipe to the desired level from the inside of the provided wall mounted outlet. These Restricted height outlets are available for purchase from Devan.

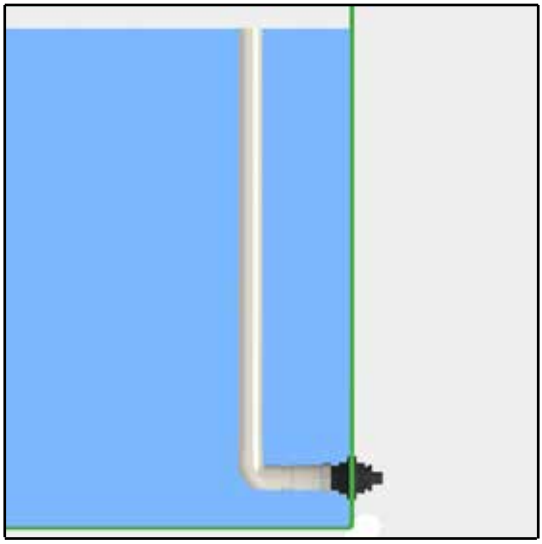

25mm Restricted Height outlet - RO25

All pipe fittings larger than 25mm must be supported independently to minimise stress on base. Please use only appropriate PVC or polyethylene fittings and make sure that all joints are flexibale and are well sealed and watertight with no light penetration.

Where a bottom outlet fitting of over 50mm is required it is strongly recommended that the tank be upgraded to heavy duty or extra heavy duty to accommodate the high-use nature of the application. If a larger fitting is installed in a standard tank it will void the warranty.

Any aftermarket fittings installed in the tank wall or base will void warranty.

TOP PLUMBING

Connecting to the dome

There are specially designed mounting areas on the dome of the tank, for inlet and overflow plumbing. We recommend the use of Universal seals® with all top plumbing and care should be taken when drilling the corresponding hole size. Proper hole saws must be used.

Universal seals® are available from Devan (25mm to 100mm).
The overflow should be piped away from the foundation to avoid erosion.

Overflows

An overflow must be installed in all instances to let excess water out of the tank. This is also important if the tank is filled from a float valve in case it sticks open.

A 'Hockey stick' shaped overflow will not provide sufficient out flow in instances of heavy rain and failure to allow could lead to the tank dome eventually vacuuming in.

Ninety degree overflow and vent pipe work is essential.



Rainwater Tank - example

TOP PLUMBING - CONTINUED

Venting

It is essential that you have more than adequate overflow and air venting for your operating conditions. Air and water must be able to exit the tank at the combined maximum rate that it can enter. If the tank is not sufficiently vented it will inevitably suck in the dome of the tank which will cause the tank to fail prematurely.

For high flow situations such as a wash down tank at a cowshed an appropriate size vent must be installed in the dome.

Venting options are available from Devan.



100mm Overflow vent kit- TAKOV100

WATER PUMP INSTALLATION

Do not directly install water pumps to the side of your water tank. The water pump and its motor must be self-supported on its own mount and connected to the tank via flexible hose to isolate any vibration or movement by the pumping unit itself. The tank outlet areas and their fittings must not be stressed by the weight of the water pump, motor or plumbing.

Remember to allow more than adequate overflow and venting when water pumps are used. Air and water must be able to enter or escape the tank at the same rate the water is being pumped in or out. Use the top plumbing areas when attaching overflow or vent plumbing to your water tank.

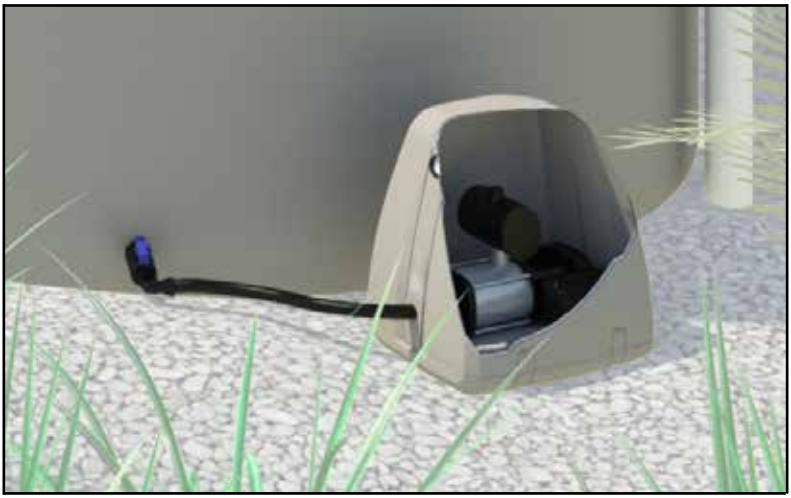

25mm Plumbing kit with Pump and Cover

WARRANTY POLICY

Your Devan product has been manufactured to the highest standards utilising advanced technology and production procedures. Devan Plastics Limited ("Devan") offers a warranty to the original purchaser that their products to be free of defects in workmanship or materials for the period defined in Appendix A, provided the provisions detailed below have been complied with.

A third party manufacturers' warranty applies to all other components used in the manufacture of Devan products. Third party manufacturer's warrant their products are free from defects in material and workmanship at the time of shipment and will make good, by repair or at its option replacement, any defects which occur during the warrantable period as defined in Appendix A provided the provisions below have been complied with.

Necessary provisions

In order for a warranty claim to be accepted by Devan or a third party manufacturer the following provisions must be met:

1) The equipment was correctly installed and in proper use as was intended by the manufacturer in accordance with the Installation and operating instructions supplied, and generally accepted code of practice or national standard/s.

2) The warranty period (as defined in Appendix A) from the date of invoice to the end user has not lapsed.

3) The claim for goods under warranty arises solely from faulty material or manufacturers' workmanship.

4) The customer or agent of the customer must return goods under warranty (where appropriate), stating the date and place of purchase promptly and within the product warranty period.

5) No repairs must be entered into by anybody other than a specified distributor or repairer as agreed and appointed by Devan.

6) Devan must be given a reasonable opportunity to inspect the tank and, if deemed necessary by Devan to have an independent engineering or other expert analysis of the cause of failure carried out.

Exclusions

Both the Devan warranty and third party manufacturer's warranty do not cover the following exclusions:

WARRANTY - CONTINUED

1) Except where otherwise stated by law, the manufacturer shall not be under liability for any injury, damage, or loss, including consequential damage or loss resulting from the use of its products, or resulting from defects therein. This may specifically refer to the cost of but not limited to lifting, installation, electrical or plumbing requirements.

2) Damage caused by abnormal operating conditions, war, violence, cataclysm, or any force majeure.

3) Damage caused by the equipment being used for an application for which it is not manufactured or recommended by the original manufacturer or Devan.

4) Damage caused by sand or abrasive materials, corrosion due to salt water, hazardous liquids, electrolytic action, and liquid temperatures beyond the recommended range, cavitation, and improper power supply voltage or outages.

5) Attempted repair, dismantling or any other tampering with any component of the system without the prior written approval of Devan will void any warranty.

6) If the Devan product or third party component has not been maintained in accordance with Devan.

7) Ingress of water or insect infestation to electrical components due to post-manufacture electrical penetrations not being appropriately protected.

8) Incorrect installation or negligent practices of the installer of the product.

9) Tank colour that may change or fade over time.

10) Any transport, insurance and freight costs.

This warranty does not exclude any condition or warranty implied by the Consumer Guarantees Act 1993, Fair Trading Act 1986, and the Commerce Act 1986 and is in addition to any rights the purchaser may have at law.

Appendix A - Product warranty periods

Product	Warranty Period
Water tanks (residential)	20 years
Water tanks (commercial)	10 years
Water tanks (custom made outlets - > 100mm)	1 year
Molasses tanks	10 years
Septic tanks	15 years
WWTS vessels	15 years
Grease traps	10 years
Flout tank	10 years
Detention/retention tanks	15 years
Drums	1 year
Refuse bins	1 year
Industrial bins	1 year
Third party components (WWTS)	1 year
Third party components (other)	1 year
Grundfos pumps	2 years

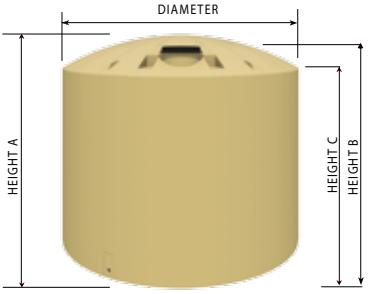

TT30 - 30,000 Litres

DIAMETER: 3.7 metres
HEIGHT A: 3.1 metres
HEIGHT B: 2.9 metres
HEIGHT C: 2.7 metres
WEIGHT: 475 kg
MANWAY: 435mm
OUTLETS: 2 x 50mm
THREAD: Brass BSP

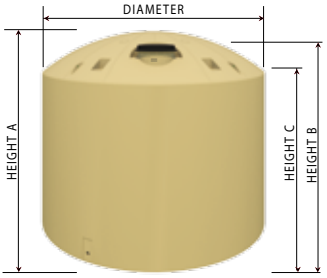

TT25 - 25,000 Litres

DIAMETER: 3.5 metres
HEIGHT A: 3.0 metres
HEIGHT B: 2.8 metres
HEIGHT C: 2.5 metres
WEIGHT: 375 kg
MANWAY: 435mm
OUTLETS: 2 x 50mm
THREAD: Brass BSP

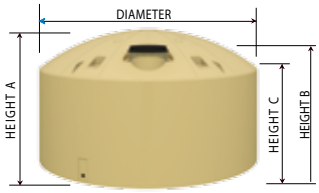

TT15 - 15,000 Litres - NORTH ISLAND

DIAMETER: 3.5 metres
HEIGHT A: 2.0 metres
HEIGHT B: 1.8 metres
HEIGHT C: 1.6 meters
WEIGHT: 250kg
MANWAY: 435mm
OUTLETS: 2 x 50mm
THREAD: Brass BSP

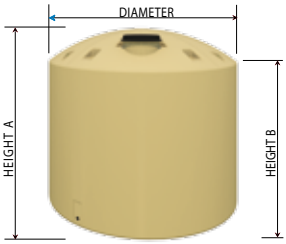

TT15 - 15,000 Litres - SOUTH ISLAND

DIAMETER: 2.9 metres
HEIGHT A: 2.6 metres
HEIGHT B: 2.2 metres
WEIGHT: 275 kg
MANWAY: 435mm
OUTLETS: 2 x 50mm
THREAD: Brass BSP

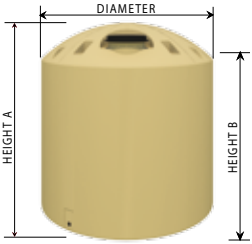

TT10 - 10,000 Litres - NORTH ISLAND

DIAMETER: 2.5 metres
HEIGHT A: 2.6 metres
HEIGHT B: 2.2 metres
WEIGHT: 225 kg
MANWAY: 435mm
OUTLETS: 2 x 50mm
THREAD: Brass BSP

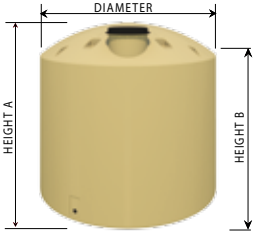

TT10 - 10,000 Litres - SOUTH ISLAND

DIAMETER: 2.6 metres
HEIGHT A: 2.4 metres
HEIGHT B: 2.1 metres
WEIGHT: 225 kg
MANWAY: 435mm
OUTLETS: 2 x 50mm
THREAD: Brass BSP

WATER TANK DIMENSIONS - CONTINUED

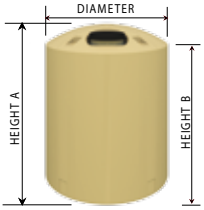

TT05 - 5,500 Litres - NORTH ISLAND

DIAMETER: 1.9 metres
HEIGHT A: 2.3 metres
HEIGHT B: 2.0 metres
WEIGHT: 112.5 kg
MANWAY: 435mm
OUTLETS: 1 x 50mm
THREAD: Brass BSP

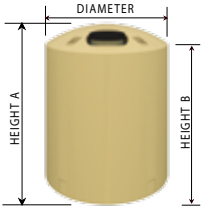

TT05 - 5,000 Litres - SOUTH ISLAND

DIAMETER: 1.9 metres
HEIGHT A: 1.9 metres
HEIGHT B: 1.8 metres
WEIGHT: 100 kg
MANWAY: 435mm
OUTLETS: 1 x 50mm
THREAD: Brass BSP

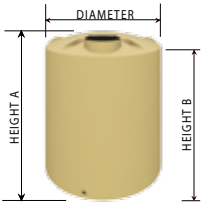

TT04 - 4,000 Litres

DIAMETER: 1.7 metres
HEIGHT A: 1.9 metres
HEIGHT B: 1.8 metres
WEIGHT: 75 kg
MANWAY: 383mm
OUTLETS: 1 x 50mm
THREAD: Brass BSP

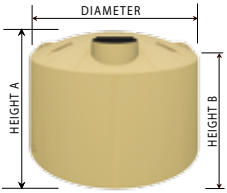

TT03 - 3,500 Litres

DIAMETER: 2.0 metres
HEIGHT A: 1.3 metres
HEIGHT B: 1.1 metres
WEIGHT: 75 kg
MANWAY: 383mm
OUTLETS: 1 x 50mm
THREAD: Brass BSP

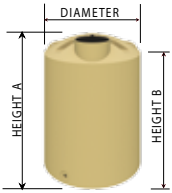

TT02 - 2,000 Litres

DIAMETER: 1.4 metres
HEIGHT A: 1.8 metres
HEIGHT B: 1.6 metres
WEIGHT: 50 kg
MANWAY: 383mm
OUTLETS: 1 x 50mm
THREAD: Brass BSP

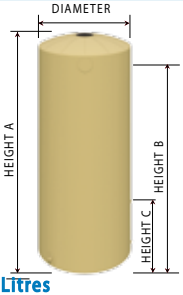

TT01 - 1,000 Litres

DIAMETER: 0.87 metres
HEIGHT A: 2.0 metres
HEIGHT B: 1.8 metres
HEIGHT C: 0.4 metres
WEIGHT: 35 kg
MANWAY: 150mm
OUTLETS: 2x50mm & 2x16mm
THREAD: Brass BSP

WATER TANK DIMENSIONS - CONTINUED

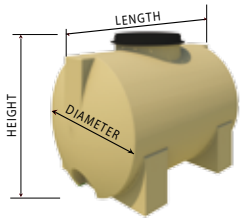

TT007 - 750 Litres

LENGTH: 1.3 metres
HEIGHT: 1.0 metres
DIAMETER: 0.9 metres
WEIGHT: 30 kg
MANWAY: 435mm

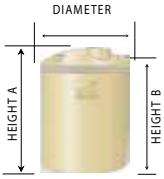

TT006 - 600 Litres

DIAMETER: 0.86 metres
HEIGHT A: 1.2 metres
HEIGHT B: 1.1 metres
WEIGHT: 20 kg
MANWAY: 190mm
OUTLET: 1 x 50mm
THREAD: Brass BSP



Depending on the cleanliness of your water source, your water tank should be cleaned on a regular basis.

What can end up in my water?
Algae growth is a common occurrence in water tanks. Devan water tanks are manufactured to strict quality tolerances, meaning that no light can penetrate the tank which will eliminate any algae growth, as algae need light to exist. Sometimes the nature of an installation can change this whereby an installer may cut oversized holes for inlets or overflows/venting. Blocking up any points for light to enter the tank will reduce or eliminate algae growth in the tank.

External debris are a much more visible source of contamination that will either float on the top of the water, of form sediment on the bottom of the tank. Such contaminants will consist of leaf litter, bird droppings, dead insects and even animals. This debris will build up on the bottom of your tank and require removal periodically.

Cleaning frequency
Devan recommend that you clean your tank out at least annually; however it is important to inspect your water tank on a quarterly basis to assess the level of contamination. A quality installation with the right pretreatment accessories could mean your tank remains in immaculate condition for a number of years before requiring cleaning. Cleaning of your tank will either take a bunch of your time or money and so the less frequently you need to clean it, the better. If you are noticing the rapid build up of sediment on the bottom of your tank, investigate the options for pre-treatment.

Devan tanks have outlet locations positioned up off the bottom of the tank which means you are not drawing off the contaminated water at the bottom of the tank for your day to day consumption. This is a precautionary measure only and should not be relied upon to prevent organic material entering your water supply.

Tank cleaning options

Professional contractors
The Yellow Pages and other online sources will provide the details of people providing 'Water Tank Services'.

Depending on your proximity to the nearest service provider, this is not a terribly expensive exercise with reports of $200-$300 plus the cost of a tank of water, which varies dramatically around the country.

CLEANING AND MAINTENANCE - CONTINUED

Although a self clean (described below) is a relatively straight forward exercise, it can be very time consuming, while a contractor will have it done in a couple of hours.

Do it yourself

Warning: If you will be getting into the tank to clean it, make sure there is adequate ventilation, and you have another person present at all times in case something should go wrong. Working in confined spaces is dangerous and should not be attempted by an individual working alone.

Draining the tank down to the last 1-2 thousand litres through the spare outlet will concentrate all contaminants into the bottom of the tank. The quickest and easiest way to then remove the concentrated contaminants is to hire a wet vacuum system or pump and stir up all the debris with a soft broom, which will then be sucked out by the vacuum or pump.

Siphoning off sediments may also be done using an inverted funnel (described below) or pool vacuum cleaner, by dragging it along the bottom of the tank.



1) Start with a piece of flexible plastic tubing long enough to reach into your tank. Then fix an ordinary kitchen funnel to one end.



2) Fill the tube with water from a garden hose, making sure there are no air spaces present and the funnel is partially filled.



3) Block up the open end with a watertight seal and hold the funnel end vertical so the water stays contained in the tube.



4) If you are unable to enter the tank, attach the funnel to a long pole that you can manoeuvre through the tank opening.



5) When ready, plunge the funnel end into the tank water, then position the outside end in bucket and remove the stopper.



6) Water should begin to flow out the tank into the bucket, and you can now suck up any accumulated debris on the tank floor.

Devan would like to credit Gisborne District Council for some written content and the pictorial siphon instructions, and the Ministry of Health for some written content.

Attach stamp

Devan Plastics Limited
PO Box 2602
Tauranga 3140

FOLD

WARRANTY REGISTRATION

Thank you for purchasing your tank from Devan, please take the time to fill out the warranty registration form. You can complete this online under 'warranty registration' or complete the form below and post it in.

Name .....

Address .....

.....

.....

.....

Phone .....

Email .....

Product Purchased .....

Serial or Sales Number .....

Installer (if used) .....

Description of tank use (stock water, home supply, molasses etc)

.....

.....

Check List

- ☐ Base outlets flexibly plumbed
- ☐ Overflow installed (larger than inflow)
- ☐ Base fill clean and level
- ☐ Tank vented correctly
- ☐ Depth of burial not exceeded

CUT

7701 Electrical Basic

Real Flame Owner's Manual

Ref 27744. Uploaded 22 Jun 2021

Purpose: Installation, Maintenance

REAL FLAME

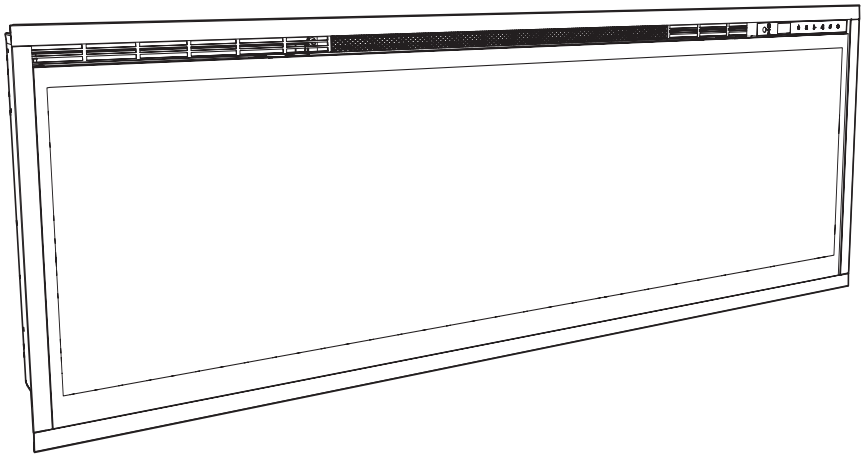

Owner’s Manual

Model's
Ignite 50" / RF XLF50
Ignite 74" / RF XLF74
Ignite 100" / RF XLF100

EN

CE The product complies with the European Safety Standards EN60335-2-30 and the European Standard Electromagnetic Compatibility (EMC) EN55014, EN60555-2 and EN60555-3. These cover the essential requirements of EEC Directives 2006/95/EC and 2004/108/EC

08/53411/0 Version 6

Table of Contents

Welcome & Congratulations 3
IMPORTANT INSTRUCTIONS 4
Quick Reference Guide 6
Fireplace Installation 7
Operation 11
Maintenance 15

Always use a qualified technician or service agency to repair this fireplace.

! **NOTE:** Procedures and techniques that are considered important enough to emphasize.

CAUTION: Procedures and techniques which, if not carefully followed, will result in damage to the equipment.

WARNING: Procedures and techniques which, if not carefully followed, will expose the user to the risk of fire, serious injury, or death.

Welcome & Congratulations

Thank you and congratulations for purchasing an electric fireplace from Real Flame. Please take note of the location of the Model & Serial for this product it is important to be able to locate it in the event of requiring technical support.

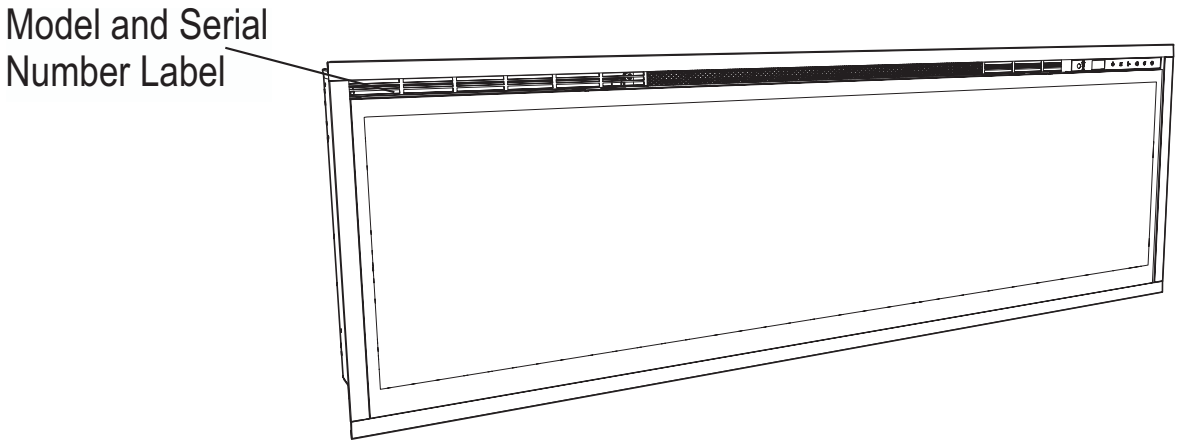

Please carefully read and save these instructions.

CAUTION: Read all instructions and warnings carefully before starting installation. Failure to follow these instructions may result in a possible electric shock, fire hazard and will void the warranty.

⚠ IMPORTANT INSTRUCTIONS

Important Safety Advice

When using electrical appliances, basic precautions should be followed to reduce the risk of fire, electric shock, and injury to persons, including the following:

If the appliance is damaged, check immediately with the supplier before installation and operation.

Do not use this appliance in the immediate surroundings of a bath, shower or swimming pool.

Do not use outdoors.

This appliance must not be located immediately above or below a fixed socket outlet or connection box.

WARNING : The appliance carries the Warning Symbol indicating that it must not be covered or has a Do not cover label. Do not cover or obstruct in any way the heat outlet grille located at the top of the appliance overheating will result if the appliance is accidentally covered. Do not place material or garments on the appliance, or obstruct the air circulation around the appliance, for instance by curtains or furniture, as this could cause overheating and a fire risk.

In the event of a fault unplug the heater.Unplug the appliance when not required for long periods.The supply cord must be placed on the right hand side of the heater away from the heat outlet underneath the appliance.

Although this appliance complies with safety standards, we do not recommend its use on deep pile carpets or on long hair type of rugs.

This appliance can be used by children aged from 8 years and above and persons with reduced physical, sensory or mental capabilities or lack of experinence and knowledge if they have been given supervision or instruction concerning use of the appliance in a safe way and understand the hazards involved. Children shall not play with the appliance. Cleaning and user maintaince shall not be made by children

⚠ IMPORTANT INSTRUCTIONS

without supervision.

Children of less than 3 years should be kept away unless continuously supervised. Children aged from 3 years and less than 8 years shall only switch on/off the appliance provided that it has been placed or installed in its intended normal operating position and they have been given supervision or instruction concerning use of the appliance in a safe way and understanding the hazards involved. Children aged from 3 years and less than 8 years shall not plug in, regulate and clean the appliance or perform user maintaince.

The appliance must be positioned so that the plug is accessible.

If the supply cord is damaged it must be replaced by the manufacturer or service agent or similarly qualified person in order to avoid a hazard.

CAUTION: In order to avoid a hazard due to inadvertent resetting of the thermal cut-out, this appliance must not be supplied through an external switching device, such as a timer, or connected to a circuit that is regularly switched on and off by the utility.

CAUTION - Some parts of this product can become very hot and cause burns. Particular attention has to be given where children and vulnerable people are present.

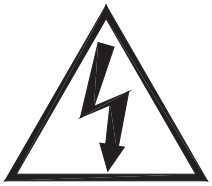

CAUTION
RISK OF ELECTRIC SHOCK
DO NOT OPEN
NO USER-SERVICABLE PARTS INSIDE



SAVE THESE INSTRUCTIONS

Quick Reference Guide

1. The electrical information regarding your electric fireplace can be found on the rating label located on the top of the unit.

2. If you have any technical questions or concerns regarding the operation of your electric fireplace, or require service contact the relavent customer service as listed on your warrenty card.

3. For dimensions of your fireplace, refer to Figure 1.

Figure 1

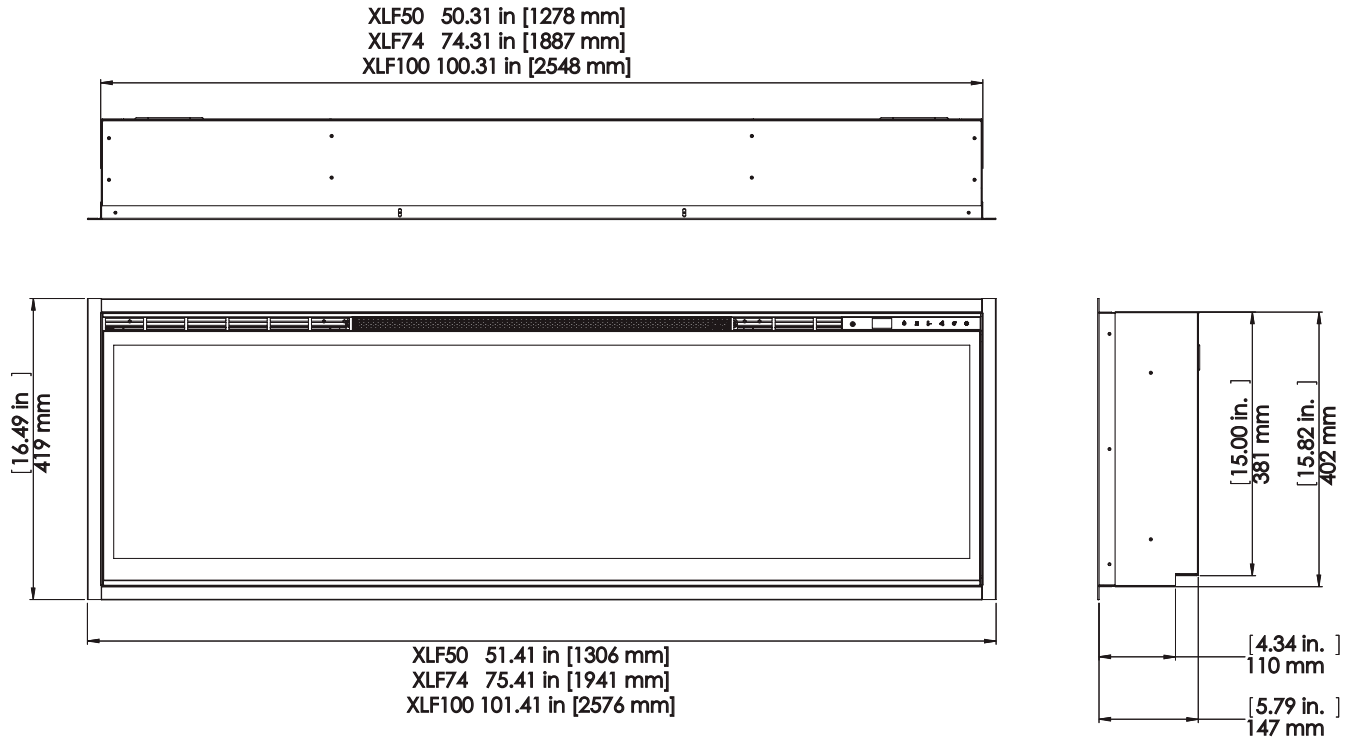

Framing Detail

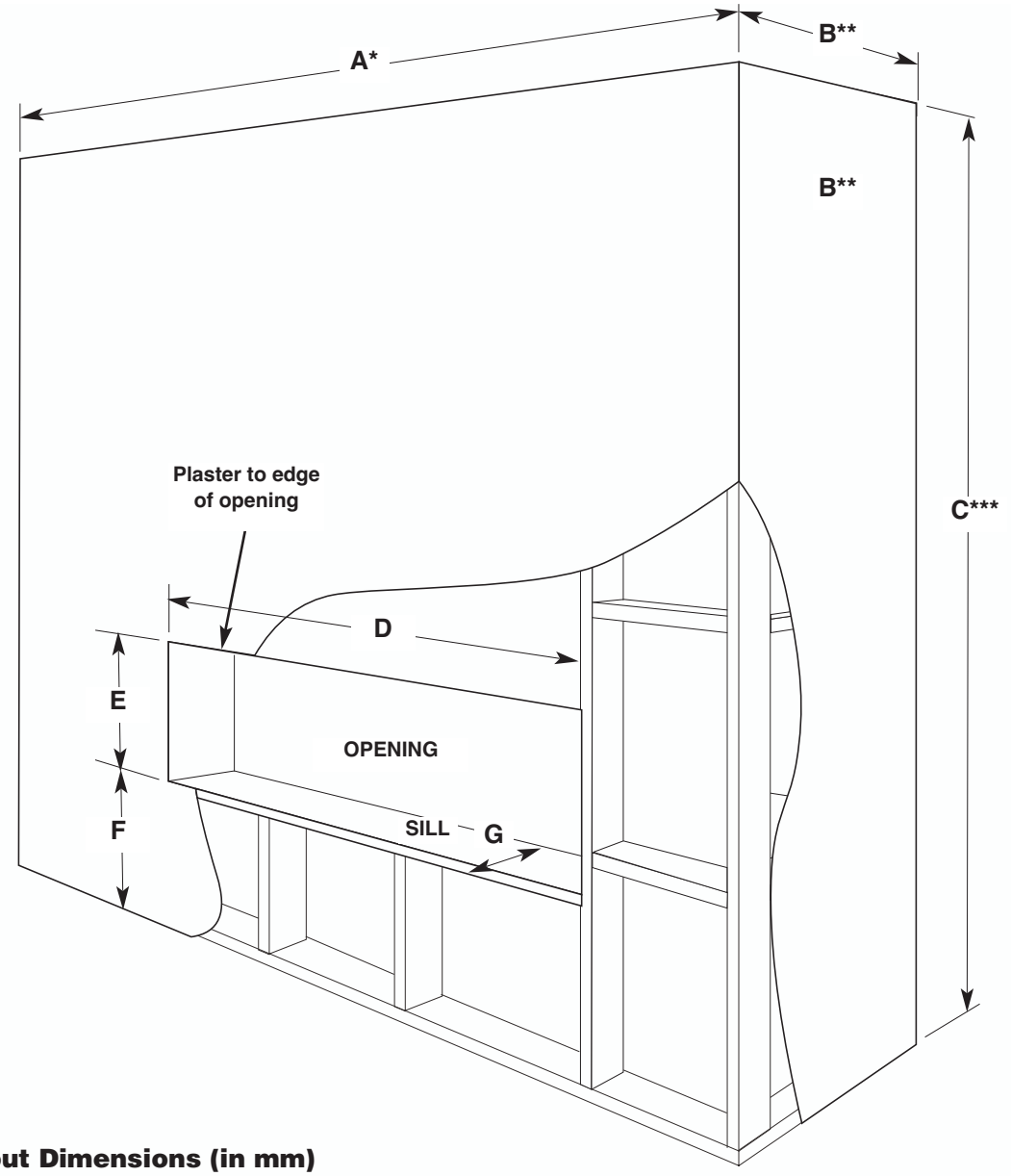

Frameout Dimensions (in mm)

MODEL	A	B	C	D	E	F	G
XLF50	1420	160	1500	1287	406	900	102
XLF74	2050	160	1500	1897	406	900	102
XLF100	2690	160	1500	2557	406	900	102

A * Minimum

B ** Minimum

C *** Minimum

Refer to notes on pages 8 to 11.

Fireplace Installation

CAUTION: Ensure installation does not allow fireplace to be in direct contact with building vapor barrier or insulation and meets all local building code.

NOTE: A 10 Amp, 230 – 240 Volt circuit is required. A dedicated circuit is preferred but not essential in all cases. A dedicated circuit will be required if, after installation, the circuit breaker trips or fuse blows on a regular basis when the heater is operating.

WARNING: Construction and wiring must comply with local building codes and other applicable regulations to reduce the risk of fire, electric shock and injury to persons.

WARNING: To reduce the risk of fire, electric shock or injury to persons, always use a licensed electrician.

WARNING: To reduce the risk of fire, do not store or use gasoline or other flammable vapors or liquids in the vicinity of the heater.

1. Select a location that is not susceptible to moisture and is away from drapes, furniture and high traffic.
2. Unpack the fireplace and hardware from the box.

NOTE: Leave the front glass and partially reflective glass, safely, in the box until the time you are ready to install it.

3. Store the fireplace in a safe, dry and dust free location until you are ready to install the fireplace.

Installation

CAUTION: Two people will be required for various steps of this procedure.

This design of this unit allows three options for installation: **partial recess**, **flush mounted** or **sub-surface** mounted.

CAUTION: **Sub-surface** mounting should be limited to ½ in. (12 mm) to ensure adequate air flow of heated air out of the firebox area.

1. Prepare a wall with a framed opening of 16 in. (40.6 cm) high,
   - XLF50 - 50 ⅝ in. (128.7 cm)
   - XLF74 - 74 ⅝ in. (189.7 cm)
   - XLF100 - 100 ⅝ in. (255.7 cm) wide, with a bottom sill that is a ***minimum*** of 4 in. (10.2 cm) deep. The sill can be constructed to support the front of the unit to allow the power supply wires to easily be run behind or flush with the back of the unit and a pass thru

Fireplace Installation

hole drilled for electrical wire routing.

! NOTE: It is recommended that the bottom of the unit be mounted between 30 in. (76.2 cm) and 40 in. (102 cm) from the ground to maintain an optimized viewing angle of the flame.

⚠ WARNING: Do not attempt to wire your own new circuits. To reduce the risk of fire, electric shock or injury to persons, always use a licensed electrician.

⚠ WARNING: Ensure that the circuit on which the fireplace is to be installed has the power cut off at the service panel until installation is complete.

2. The unit is provided with an installed ¾ in. (2.0 cm) trim. Depending on the installation, this trim can be removed by removing the securing screws and the 4 trim pieces.
3. Lift fireplace, from the bottom and the handles located on the back, and insert into opening to the desired depth.
4. Using a bubble level (supplied) ensure that the fireplace is level within the framing. Adjust as required.
5. Drive four supplied mounting screws through the four mounting holes located on the inside surface of the fireplace chassis, into wall studs (Figure 2).

For Bathroom Use

If this unit is installed in a bathroom it must be protected by a GFI receptacle or circuit. If receptacle is used it must be readily accessible.

Figure 2

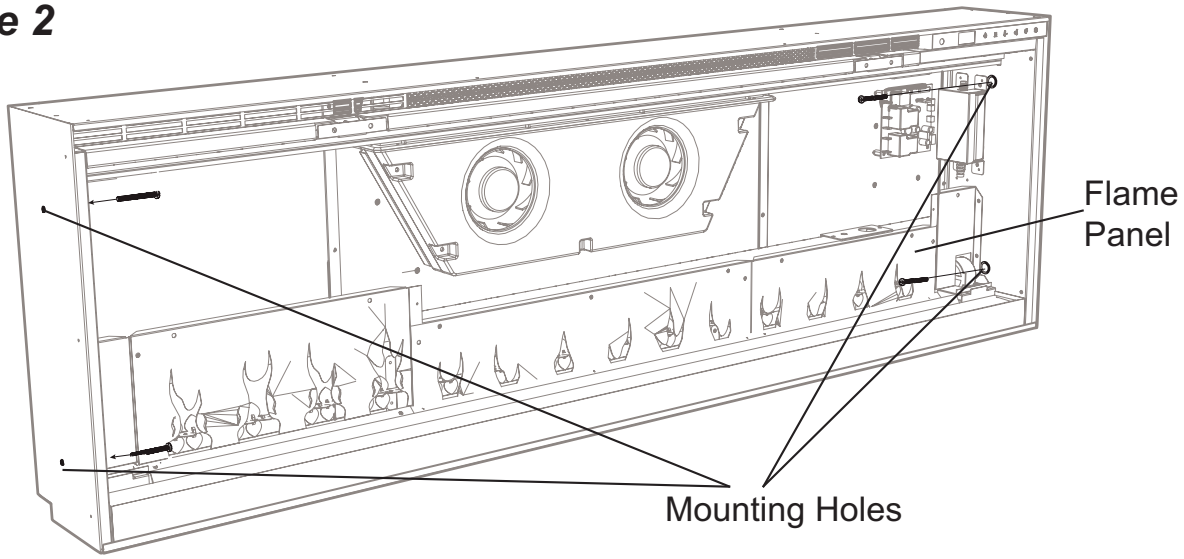

Fireplace Installation

Figure 3

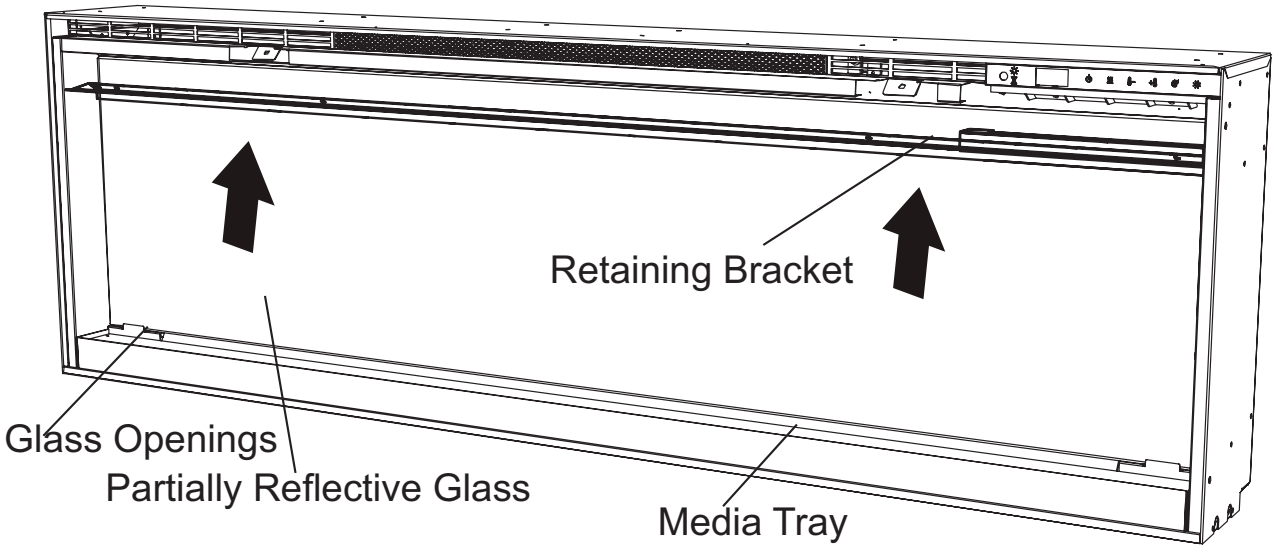

To prevent electrical shock this unit is an electrical appliance that is ***NOT*** watertight and must be installed as to prevent water from entering unit. This must be installed away from showers, tubs, etc. Never locate fireplace where it may fall into a bathtub or other water container.

Final Assembly

1. Locate and remove the 12 screws securing the partially reflective glass bracket to the unit, along the top of the opening, and set bracket and screws aside.
2. Remove the provided suction cup from the inside cavity of the unit (only for XLF74 and XLF100 units).
3. Before installation ensure that the front glass and the partially reflective glass are clean. Particles can be removed by dusting lightly with a clean dry cloth. To remove fingerprints or other marks, the glass can be cleaned with a damp cloth. Ensure that the glass has completely dried before installation.
4. Carefully secure the suction cup to the partially reflective glass, reflective side out, and place into the openings on either side of the unit.
5. Tip the glass into the unit and using the removed screws secure the glass into the unit with the provided bracket (Figure 3). Remove the suction cup.

Fireplace Installation

6. Evenly space the large media in the media tray along the back of the media tray (for optimum media effect), then carefully pour and evenly distribute the smaller media into the Media Tray.
7. Carefully place the front glass into the lip located at the bottom of the opening of the firebox.
8. Tip the front glass into the unit and secure using the provided screws and Allen key. (Figure 4).

! **NOTE:** Ensure that the suction cup and Allen key are kept for any future maintenance or service.

Figure 4

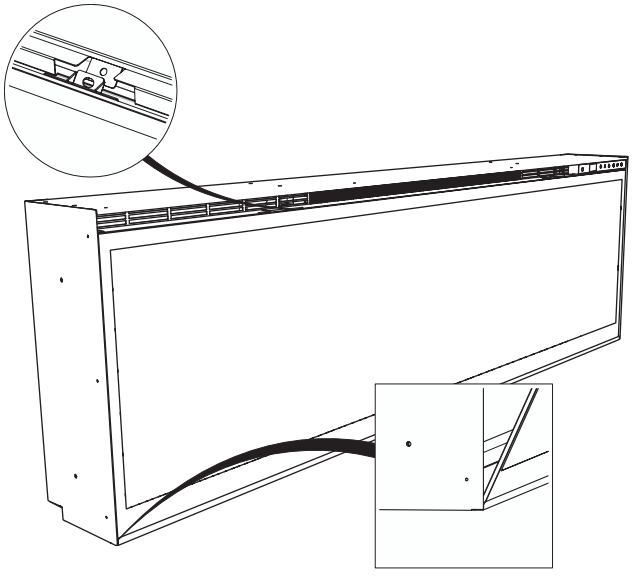

☛ Operation

General Operation

WARNING: This electric firebox must be properly installed before it is used.

This firebox operates with Comfort$aver™ technology, which automatically adjusts the fan speed and heater wattage to safely and precisely match the requirements of the room based on the thermostat setting. The heater operates such that once the room reaches the set point, the fan and heater will continuously run at a low level, to maintain the desired room temperature. If the temperature in the room rises significantly, i.e. sun coming through a window or a central furnace turns on, the heater will turn off and periodically turn back on to circulate the air around the unit, until the room temperature drops and requires the heater to be constantly on again.

! NOTE: The unit is designed so that the fan will run continuously while the heater is on.

! NOTE: The element retains heat after shutdown, there is a built in cool down period of 2 minute before the fan shuts off completely, when the heat function is turned Off.

Remote Operation

The fireplace is supplied with an IR multi-function remote control.

! NOTE: To operate correctly, the remote control must be pointed towards the front of the unit.

Controls

The unit can be controlled by either the manual controls which are located on the upper right of the fireplace or the remote (Figure 5 & 6).

A. ⏻ Standby

Turns the unit On and Off.

→ Activated by pressing the Standby button on the remote or the unit.

- The unit will turn On with the same functions that it was set to when it was turned Off and the intake temperature will be indicated on the Display.

! NOTE: When any button is pressed on the unit the intake temperature will be displayed on the Display for 7 seconds.

B. Flame Effects

Turns the Flame Effect On and Off.

→ Activated by pressing the button on the remote.

☛ Operation

Figure 7

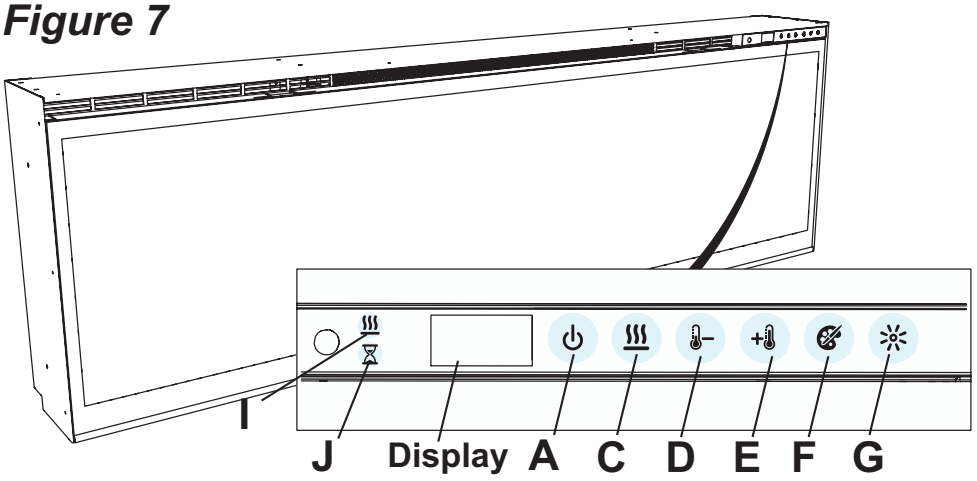

Figure 8

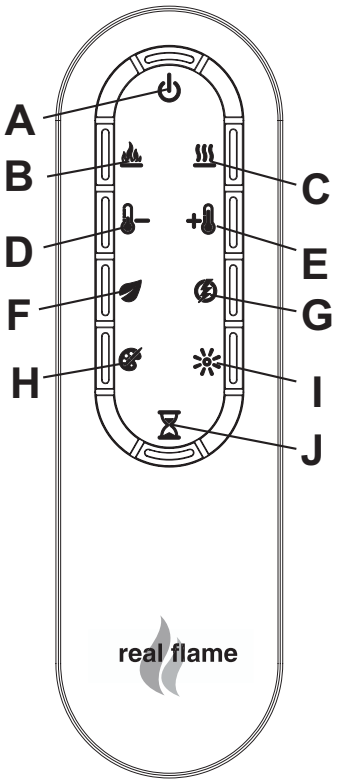

C. Heat ON/OFF

Turns the heater On and Off.

→ Activated by pressing the button on the remote or the unit.

- Indicated by the icon and the setpoint temperature will flash on the display, then the intake temperature will be displayed before turning off.

! NOTE: After the heater is switched off, there is a 2 minute fan delay, where the fan will continue running before turning off.

! NOTE: The unit can be operated in ***Heat Only Mode***. When the unit is only running with the heater, the icon will continuously be displayed on the Display.

! NOTE: The heater may emit a slight, harmless odor when first used. This odor is a normal condition caused by initial heating of internal heater parts and will not occur again.

D Temperature Down

Decreases the temperature setting.

→ Adjusted by repeatedly pressing the corresponding button on the remote.*

- Indicated by setpoint temperature on the Display decreasing and the speed of the fan decreasing to reduce the amount of heat being projected into the room.**

E. Temperature Up

Increases the temperature setting.

Operation

→ Adjusted by repeatedly pressing the corresponding button on the remote.*

- Indicated by the setpoint on the Display increasing and the speed of the fan increasing to increase the amount of heat being projected into the room.

* The first time the button is pressed the current temperature set point will be displayed for 2 seconds.

** The temperature can be adjusted from 5 °C to 37 °C (41 °F to 99 °F).

! NOTE: Holding the + and the − buttons down for two seconds, on the unit, will change the temperature scale from °C to °F, or vice versa.

F. Eco Operation

Runs the heater in a reduced wattage range when activated.

→ Adjusted by pressing the corresponding button on the remote when the heater is on.

- Indicated by the Display and a reduced fan speed.

G. Heat Boost

Turns the Heater Boost On and Off. Runs the unit at the full rated wattage.

→ Activated and adjusted by repeatedly pressing the corresponding button on the remote.

- Indicated by the heater running at full heat, for a user set amount of time, to quickly heat up a cold room/space. The Heat Boost can be set for a maximum of 20 minutes, in 5 minute increments.

Disable Heat

If desired, depending on the season, the heater on the unit can be disabled. The function of the remaining controls will continue to function as outlined in this manual.

Pressing the and − buttons on the unit at the same time and holding for 2 seconds will disable and enable the heater.

! NOTE: When the heater has been disabled and any of the heat related functions are used, the Display will indicate "---".

F. Color Themes

Different presets of lighting color combinations are available in the unit.

→ Changed by repeatedly pressing the corresponding button on the remote or the unit.

☛ Operation

- Cycles through the different preset light settings of the unit, this includes different combinations of colors of the flame base and media lighting.

! NOTE: Two of the themes in the cycle are a prism where the unit cycles through a variety of colors. Pressing the ✲ stops the cycling and holds the unit on the preferred color, indicated by a solid circle. When the unit is on prism, and is cycling through the colors, a rotating circle will be displayed.

G. ✲ Brightness

Changes the Brightness of the lights in the unit.

→ Adjusted by repeatedly pressing the corresponding button on the remote or the unit.

- Indicated by the second digit on the Display changing to show: "H" (high), and "L" (low).

H. ⧖ Sleep Timer

The Sleep Timer can be set to automatically shut off the fireplace after a preset time (from 30 minutes to 8 hours).

→ To set the timer press the timer button on the remote, repeatedly, until the desired time is displayed.

- The Display will display the different times as it is adjusted.

Once the timer has begun, pressing the ⧖ button will display the time remaining before the unit turns Off.

! NOTE: The Sleep Timer can be cancelled at any time by pressing the ⧖ button repeatedly until the sleep timer displays nothing.

Resetting the Temperature Cutoff Switch

Should the heater overheat, an automatic cut out will turn the whole unit off and it will not come back on without being reset. If the ⏻ button on the unit is pressed, Er2 will be displayed on the unit. It can be reset by turning the unit off at the main disconnect panel and waiting 5 minutes before turning the unit back on.

⚠ CAUTION: If you need to continuously reset the heater, turn the unit off at the main disconnect panel and call technical support.

Operation

Maintenance

Remote Control Battery Replacement

To replace the Battery:

1. Slide battery cover open on the remote control.
2. Correctly install one 3 Volt (CR2032 [longer life] or CR2025) Battery in the battery holder.
3. Close the battery cover.

Battery must be recycled or disposed of properly. Check with your Local Authority or Retailer for recycling advice in your area

WARNING: Disconnect power and allow heater to cool before attempting any maintenance or cleaning to reduce the risk of fire, electric shock or damage to persons.

NOTE: The fireplace should not be operated with an accumulation of dust or dirt on or in the unit, as this can cause a build up of heat and eventual damage. For this reason the heater must be inspected regularly, depending upon conditions and at a minimum yearly intervals.

Partially Reflective Glass Cleaning

The partially reflective glass is cleaned in the factory during the assembly operation. During shipment, installation, handling, etc., the partially reflective glass may collect dust particles; these can be removed by dusting lightly with a clean dry cloth.

To remove fingerprints or other marks, the partially reflective glass can be cleaned with a damp cloth. The partially reflective glass should be completely dried with a lint free cloth to prevent water spots. To prevent scratching, do not use abrasive cleaners.

Maintenance

Fireplace Surface Cleaning

Use only a damp cloth to clean painted surfaces of the fireplace. Do not use abrasive cleaners.

Recycling



For electrical products sold within the European Community. At the end of the electrical products useful life it should not be disposed of with household waste. Please recycle where facilities exist. Check with your Local Authority or retailer for recycling advice in your country.

After Sales Service

Your product is guaranteed for one year from the date of purchase.

Within this period, we undertake to repair or exchange this product free of charge (excluding lamps & subject to availability) provided it has been installed and operated in accordance with these instructions.

Your rights under this guarantee are additional to your statutory rights, which in turn are not affected by this guarantee.

Should you require after sales service you should contact our customer services the contact number is located on your warrenty card. It would assist us if you can quote the model number, series, date of purchase, and nature of the fault at the time of your call. The customer services help desk will also be able to advise you should you need to purchase any spares.

Please do not return a faulty product to us in the first instance as this may result in loss or damage and delay in providing you with a satisfactory service.

Please retain your receipt as proof of purchase.

REAL FLAME

GLEN DIMPLEX AUSTRALIA PTY LTD
ABN 69 118 275 460

Head Office/Factory/Showroom
1340 Ferntree Gully Rd.
Scoresby Vic 3179
Ph: (03) 8706 2000 Fax: (03) 8706 2001
E-mail: info@realflame.com.au

Richmond - VIC Showroom
300 Swan St.
Richmond Vic 3121
Ph: (03) 9428 4443 Fax: (03) 9428 4445

Dandenong - VIC Showroom
3/328 South Gippsland Highway,
Dandenong South Vic 3164
Ph: (03) 9702 7853
E-mail: sales@realflamedandenong.com.au

Geelong - VIC Showroom
1/2A Gordon Avenue.
Geelong West Vic 3218
Ph/Fax: 5229 0844
E-mail: realflamegeelong@hotmail.com.au

Sydney - NSW Showroom
546 Pacific Highway.
Chatswood NSW 2067
Ph: (02) 8905 0189 Fax: (02) 8905 0192
E-mail: info@realflame.com.au

Miranda - NSW Showroom
36 Kareena Rd
Miranda NSW 2228
Ph: (02) 8513 6202 Fax: (02) 9520 1974
E-mail: fireplace@realflamesouth.com.au

Adelaide - SA Showroom
173 -175 Magill Rd.
Norwood SA 5067
Ph: (08) 8132 0371 Fax: (08) 8132 1687
E-mail: realflamesa@iprimus.com.au

Milton - QLD Showroom
46 Douglas St,
Milton QLD 4064
Ph: (07) 3368 2011

Perth – WA Showroom
47-53 McDonald St East,
Osborne Park WA 6017
Ph: (08) 9444 9900 Fax: (08) 9444 9800

Fyshwick – ACT Showroom
88 Wollongong St,
Fyshwick ACT 2609
Ph: (02) 6280 5522

Ulverstone – TAS Showroom
31A Victoria St,
Ulverstone TAS 7315
Ph: (03) 6425 4440

BUILDING COMPLIANCE
DELIVERING CONSISTENT COLLABORATIVE COMPLIANCE THROUGHOUT NEW ZEALAND

Date: 21st April 2021

The Building Department Kaipara District Council

Dear Sir/Madam,

Re: Construction of New Dwelling at Lot 81, Robert Hastie Drive, Mangawhai

Please direct all correspondence for the lodgement and management of the Building Consent in relation to the construction of our dwelling, to our agent below:

C3 Building Compliance Lisa@c3bc.co.nz & daniel@c3bc.co.nz

Yours faithfully

Lance Vale
12 William Gilbert Place, Mangawhai

Director / Project Manager

ACDL TRUSTEE LTD
Linda and David Kendal
17 Pinefield Road, Whenuapai

Property Owner

If you are signing this application on behalf of a company/trust/other entity (the applicant), you are declaring that you are duly authorised to sign on behalf of the applicant to make such an application.

PLEASE NOTE: C3 Building Compliance does not meet the definition of Designer Or Building as defined in sections 14d & 14e of the Building Act 2004.

30 June 2021

ACDL Trustee Limited
17 Pinefield Road
Whenuapai
Auckland 0618

Dear ACDL Trustee Limited,

Section 45 request for further information on Building Consent including PIM

Reference Number: 210441
Project Location: Robert Hastie Drive
Mangawhai
Project Description: New Single Storey 4 Bedroom Dwelling with Attached Double Garage and Swimming Pool

This communication is to advise that your application has been checked for compliance with section 45 of the Building Act and does not contain sufficient information to enable building consent processing to begin.

MBIE recommend returning or rejecting applications that are not complete. This is sub-optimal, so rather than rejecting your application could you simply attach and return the information requested below to this email.

All information is to be supplied within 28 days (or the application may be refused). Please keep us informed if additional time is required.

We will advise you when we are in receipt of a complying section 45 application and start the building consent process and statutory time tracking in accordance with section 48 of of the Act.

Should further information be required during processing we will communicate via email. An email request for further information will stop the statutory time clock until sufficient information is provided to enable processing to be completed.

Main Building

Deposit / Fee
Please arrange payment of the deposit fee to complete the s45 lodgment process. The deposit/fee for the application is $9025.00 Bank Details for internet banking are shown at the bottom of this letter. Please quote the reference number off the top of this letter in the particulars field.

The invoice has been emailed to - lance@coastalhomesnz.com

Application Form
Our system shows that the property does not have a registered Council street number. Please provide the Rapid address of the property. The process and forms are available on our website https://www.kaipara.govt.nz/services/a-z-services-forms-documents/a-z-forms

Please return the form to council@kaipara.govt.nz

Vetting will not be held up for this purpose, but a block has been put on inspections until you advise us of this number.

Plumbing & Drainage Detailing
Please provide the following:
a. Owner Specification/Installation manual for the electric hot water cylinder
b. Storm water dispersal detail - water tank overflow

My apologies if any of the above matters are already covered by the documents but have been overlooked.

Should you have any queries regarding this letter, please reply to this email or phone our technical administration team on (09) 439 3123.

Yours sincerely,



Fay Fergus
Building Technical Support
On behalf of: Kaipara District Council

Kaipara District Council Bank Details
BNZ Dargaville
02 0308 0090743 07

Project information memorandum

Section 34, Building Act 2004

Application

Owner:	ACDL Trustee Limited C/- Lisa Fletcher 14 Fallow Street Queenstown 9300
Issue Date:	16 July 2021

Project

Description:	New Single Storey 4 Bedroom Dwelling with Attached Double Garage and Swimming Pool
Intended use:	2.0 Housing: 2.0.2 Detached Dwelling
Location:	Robert Hastie Drive Mangawhai
Legal description:	Lot 81 DP 556753
Valuation number:	0122008878

Please Note: This is not an approval to start building work. Please ensure your Building Consent is issued prior to commencing any work. Upon receiving your building consent please check carefully and ensure that compliance with any Conditions, District Planning restrictions or Resource Consent conditions are satisfied. The information below should be read with the understanding that should changes be made at building consent stage then this may alter the requirements listed below.

This project information memorandum does NOT constitute a building consent.

Heritage status of the building

Building work associated with this project will not be affecting land or structures that have heritage status. This project is exempt from the rules of the district plan that relate to heritage buildings.

Notable trees

Council is not aware of there being any notable trees associated with this site. Therefore the project is exempt from the rules of the District Plan that relate to Notable Trees.

Special features of the land concerned

There are no known special features of the land concerned - this includes potential natural hazards, or the likely presence of hazardous contaminants that is likely to be relevant to the design and construction or alteration of the building or proposed buildings; and that is known to the Territorial Authority; and that is not apparent from the district plan under the Resource Management Act 1991.

"Land concerned" means the land on which the proposed building work is to be carried out; and includes any

other land likely to affect or be affected by the building work.

"Special feature of the land concerned" includes, without limitation, potential natural hazards, or the likely presence of hazardous contaminants, that -
a) are likely to be relevant to the design and construction or alteration of the building or proposed building; and
b) is known to the Territorial Authority; and
c) is not apparent from the District Plan under the Resource Management Act 1991.

Other information
Once a Building Consent is issued, the Council will follow up on building work not completed within two years of building consent issue.

A Building Consent lapses and is of no effect if the building work has not been started within 12 months of the date of issue.

If the building is public premises it may not be occupied until either a Code Compliance Certificate or Certificate for Public Use has been issued.

If the building is wholly or partly a dam, a Project Information Memorandum and Building Consent must be obtained from the regional authority.

The Northland Regional Council has a register of contaminated sites. Please contact them on 0800 002 004 if you suspect that your property may be contaminated e.g. historic timber treatment sites, service stations, landfill sites.

Please check your Certificate of Title for any encumbrances (such as easements, section 73 notice) before you make an application for a Building Consent.

All archaeological sites are protected under the provisions of the Historic Places Act 1993. If subsurface archaeological evidence (shell, midden, hangi, storage pits, etc) should be unearthed during construction, work should cease in the immediate vicinity of the remains and the Historic Places Trust should be contacted.

The proposed project complies with the District Plan zoning as it does meet the Rural Zone Rule with a Harbour Overlay.

Consent Notice 8509265.4 12012486.1 12012486.3

Please be advised there are consent notices registered against this property. A breach of these conditions may result in legal action.

Council's desktop assessment has found that the site wind zone rating is high

The Council's desktop assessment has found that the site exposure zone is zone C - Inland

Council's desktop assessment has found that the site wind zone rating is high

Development Contributions do not apply to this project.

The proposed vehicle access (gradient / width / length) needs to comply with the requirements of the District Plan / Council's Engineering Standards. Attached if required, for your use, is a copy of the crossing application form.
Our system shows that the property does not have a registered Council street number.

ATTACHMENTS:
-Consent Notices 8509265.4 12012486.1 12012486.3
-Vehicle Crossing application form
- Rapid/ Urban Street Number application Form

Notes:

1. The information supplied in the sections of this project information memorandum is specific to the building project to which the application relates by reference to Council files and records. No property inspection, or title search, has been undertaken. To enable the Council to measure the accuracy of this document based on our current records we would appreciate your response should you find any information contained herein which may be considered to be incorrect or omitted. Please telephone the Council (09) 439 3123.

2. The Council has used its best endeavors to ensure that all information provided in this project information memorandum is correct and complete in all material respects. In the event that a material error or omission can be proven the Council's liability, whether in contract or in tort shall be limited to the fee paid to Council to obtain this report.

3. This information reflects the Kaipara District Council's current understanding of information which is relevant to the project. This is based only on the information thus far provided to it and held on record. As a result the Council is not in a position to warrant that the information is complete or without error and accepts no liability for any inaccuracy in, or omission from, this information.

4. The information contained in this project information memorandum is current at the date the memorandum is issued. Further relevant information may come into the Council's possession subsequent to the date of issue.

RECORD OF TITLE
UNDER LAND TRANSFER ACT 2017
FREEHOLD

Search Copy

R.W. Muir
Registrar-General
of Land

Identifier **973221**
Land Registration District **North Auckland**
Date Issued 23 February 2021

Prior References
781590

Estate Fee Simple
Area 5903 square metres more or less
Legal Description Lot 81 Deposited Plan 556753
Registered Owners
ACDL Trustee Limited

Estate Fee Simple - 1/826 share
Area 96.8877 hectares more or less
Legal Description Lot 100-103, 106, 200, 202 Deposited Plan 404128 and Lot 1 Deposited Plan 430128 and Lot 1 Deposited Plan 482523
Registered Owners
ACDL Trustee Limited

Interests

Subject to a water supply right over part Lot 100 DP 404128 marked B on DP 404128 specified in Easement Certificate 974832.2 - 19.5.1981 at 11.52 am

Appurtenant to the parts Lot 1 DP 482523 and Lot 202 DP 404128 formerly contained in NA133C/596 are rights of way specified in Easement Certificate C414433.4 - 17.9.1992 at 1:36 pm

Appurtenant to the parts Lot 1 DP 482523 and Lot 202 DP 404128 formerly contained in NA133C/596 are rights of way specified in Easement Certificate D549922.4 - 17.10.2000 at 10.22 am

The easements specified in Easement Certificate D549922.4 are subject to Section 351E (1) (a) Municipal Corporations Act 1954

Subject to a right to drain sewage over part Lot 1 DP 430128 marked BJ on DP 430128 created by Easement Instrument 8138731.3 - 20.10.2009 at 9:12 am

Appurtenant to Lot 100 DP 404128 herein is a right of way and appurtenant to Lot 1 DP 430128 herein is a right to convey stormwater created by Easement Instrument 8138731.3 - 20.10.2009 at 9:12 am

The easements created by Easement Instrument 8138731.3 are subject to Section 243 (a) Resource Management Act 1991

Subject to a right (in gross) to convey telecommunications and computer media over part Lot 200 DP 404128 marked BN and over part Lot 202 DP 404128 marked BP all on DP 404128 in favour of Telecom New Zealand Limited created by Easement Instrument 8138731.4 - 20.10.2009 at 9:12 am

The easements created by Easement Instrument 8138731.4 are subject to Section 243 (a) Resource Management Act 1991

Identifier **973221**

Subject to a right (in gross) to convey electricity over part Lot 200 DP 404128 marked BN and over part Lot 202 DP 404128 marked BP all on DP 404128 in favour of Northpower Limited created by Easement Instrument 8138731.6 - 20.10.2009 at 9:12 am

The easements created by Easement Instrument 8138731.6 are subject to Section 243 (a) Resource Management Act 1991

8138731.7 Conservation Covenant pursuant to Section 77 Reserves Act 1977 - 20.10.2009 at 9:12 am

8138731.8 Conservation Covenant pursuant to Section 77 Reserves Act 1977 - 20.10.2009 at 9:12 am

8509265.4 Consent Notice pursuant to Section 221 Resource Management Act 1991 - 6.7.2010 at 3:48 pm (affects Lots 100, 101 &103 DP 404128 and Lots 1 DP 430128 and Lot 81 DP 556753)

Land Covenant in Easement Instrument 8581297.2 - 17.2.2011 at 10:51 am

8581297.3 Encumbrance to The Sanctuary Residents Association Incorporated – 17.2.2011 at 10:51 am (Affects part Lot 1 DP 482523 formerly comprised in CT's 524301, 524302, 524303, 524306, 524308, 524309, 524312, 524315, 524316, 524318, 524328, 524335, 524342, 524343, 524346, 524349, 524351, 524298)

8581297.4 Encumbrance to The Sanctuary Residents Association Incorporated – 17.2.2011 at 10:51 am (Affects Lot 81 DP 556753, Lot 1 DP 430128 and Lot 100-103, 106, 200, 202 DP 404128 and part Lot 1 DP 482523 formerly comprised in CT's 517272, 524294, 524295, 524296, 524297, 524299, 524300, 524304, 524305, 524307, 524310, 524311, 524313, 524314, 524317, 524319, 524320, 524321, 524322, 524323, 524324, 524325, 524326, 524327, 524329, 524330, 524331, 524332, 524333, 524334, 524336, 524337, 524338, 524339, 524340, 524341, 524344, 524345, 524347, 524348, 524350)

Land Covenant in Easement Instrument 9542293.3 - 7.2.2014 at 12:23 pm (affects Lot 1 DP 482523)

12012486.1 Variation of Consent Notice 8509265.4 pursuant to Section 221(5) Resource Management Act 1991 - 23.2.2021 at 12:23 pm

Subject to Section 241(2) Resource Management Act 1991 (affects DP 556753)

12012486.3 Consent Notice pursuant to Section 221 Resource Management Act 1991 - 23.2.2021 at 12:23 pm(Affects Lot 81 DP 556753)

12012486.5 Conservation Covenant pursuant to Section 77 Reserves Act 1977 - 23.2.2021 at 12:23 pm (Affects Lot 81 DP 556753)

Land Covenant (in gross) in favour of The Santuary Residents Association Incorporated created by Covenant Instrument 12028708.1 - 26.3.2021 at 2:55 pm (Affects Lot 81 DP 556753)

Identifier **973221**

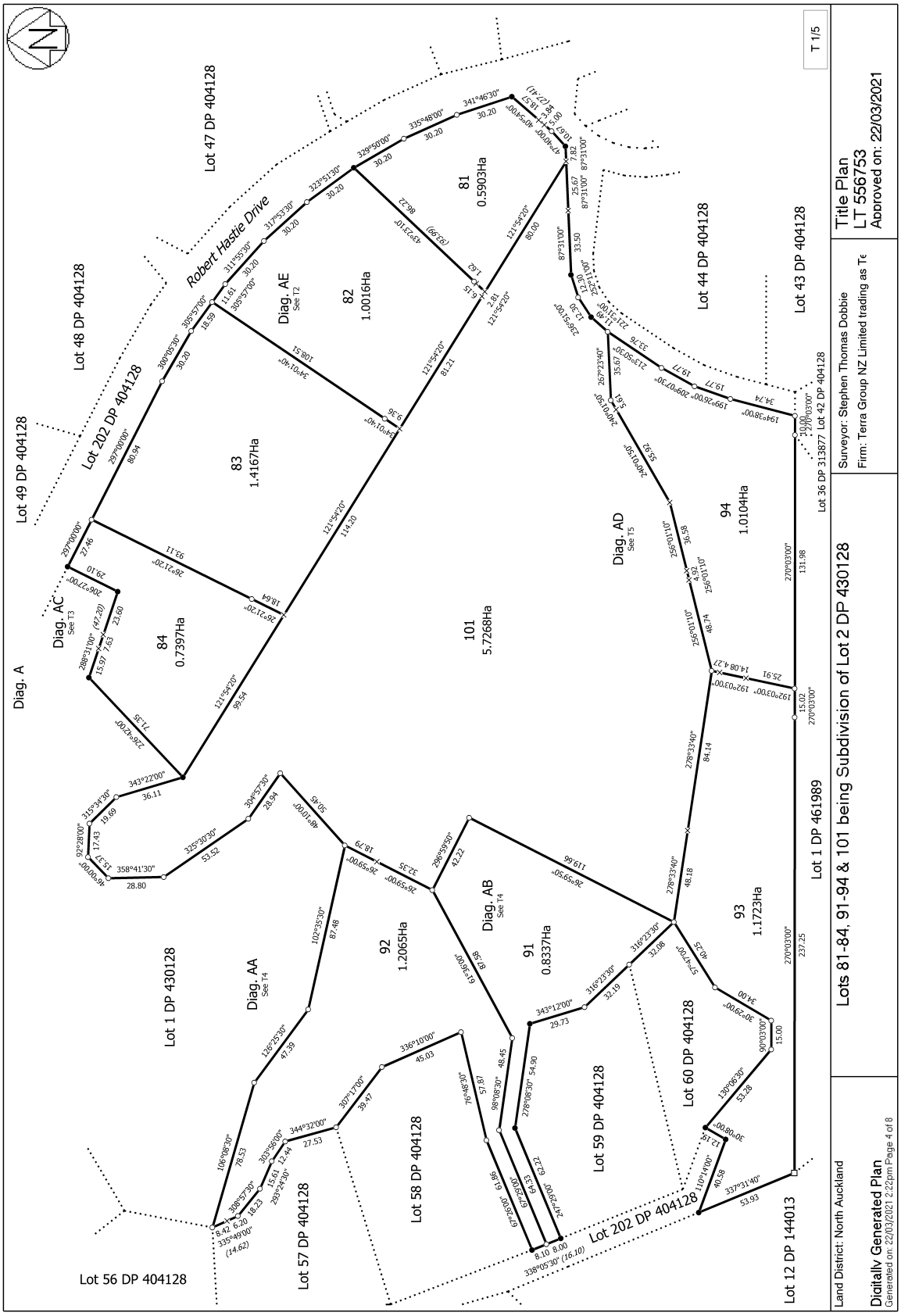

View Instrument Details

Instrument No	12012486.1
Status	Registered
Date & Time Lodged	23 February 2021 12:23
Lodged By	Cameron, Nichole Julienne
Instrument Type	Variation of Consent Notice Condition under s221(5) Resource Management Act 1991

Affected Records of Title	**Land District**
781590	North Auckland

Affected Instrument Consent Notice under s221(4)(a) Resource Management Act 1991 8509265.4

Annexure Schedule Contains 1 Pages.

Signature

Signed by Christopher Calder Hamilton Allan as Territorial Authority Representative on 22/02/2021 11:56 AM

***** End of Report *****

© Copyright: Land Information New Zealand

VARIATION OF CONSENT NOTICE
PURSUANT TO SECTION 221 (3)
RESOURCE MANAGEMENT ACT 1991

IN THE MATTER of Record of Title No 781590 (North Auckland Land Registration District)

AND

IN THE MATTER of a Consent Notice 8509265.4 (North Auckland Land Registration District)

Pursuant to Section 221(3) of the Resource Management Act 1991 the **KAIPARA DISTRICT COUNCIL** ("the Council") being satisfied that the conditions of subdivision imposed in respect of Lot 2 on Deposited Plan 430128 and 1/59 share Lot 100-103, 106, 200, 202 Deposited Plan 404128 and Lot 1 Deposited Plan 430128 and Lot 1 Deposited Plan 482523 where such conditions of consent were to be complied with on a continuing basis and were secured by way of a consent notice may now be varied by deleting from clause 16 of Consent Notice 8509265.4 referred to Lot 2 on Deposited Plan 430128 and 1/59 share Lot 100-103, 106, 200, 202 Deposited Plan 404128 and Lot 1 Deposited Plan 430128 and Lot 1 Deposited Plan 482523 to the intent that:

Reference to Lot 2 DP 430128 of the Subdivision in clause 16 of Consent Notice 8509265.4 shall be cancelled.

It is hereby agreed between the registered proprietor of the land contained in Record of Title No 781590 and the Council that Consent Notice No. 8509265.4 (North Auckland Lands Registration District) ("the Consent Notice") can be varied and the parties request the District Land Registrar to make an entry in the register and on any relevant instrument of title noting that the Consent Notice has been varied.

In all other respects Consent Notice 8509265.4 remains unaltered

DATED this 4th day of February 2021

SIGNED by
KAIPARA DISTRICT COUNCIL
by its authorised signatory

Dina Tetzner

View Instrument Details

Instrument No	8509265.4
Status	Registered
Date & Time Lodged	06 July 2010 15:48
Lodged By	Shepherd, Andrea Jane
Instrument Type	Consent Notice under s221(4)(a) Resource Management Act 1991

Affected Computer Registers	Land District
414229	North Auckland
414230	North Auckland
414231	North Auckland
414232	North Auckland
414233	North Auckland
414234	North Auckland
414235	North Auckland
414236	North Auckland
414237	North Auckland
414238	North Auckland
414239	North Auckland
414240	North Auckland
414241	North Auckland
414242	North Auckland
414243	North Auckland
414244	North Auckland
414245	North Auckland
414246	North Auckland
414247	North Auckland
414248	North Auckland
414249	North Auckland
414250	North Auckland
414251	North Auckland
414252	North Auckland
414253	North Auckland
414254	North Auckland
414255	North Auckland
414256	North Auckland
414257	North Auckland
414258	North Auckland
414259	North Auckland
414260	North Auckland
414261	North Auckland
414262	North Auckland
414263	North Auckland
414264	North Auckland
414265	North Auckland
414266	North Auckland
414267	North Auckland
414268	North Auckland
414269	North Auckland

© Copyright: Land Information New Zealand

Affected Computer Registers	Land District
414270	North Auckland
414271	North Auckland
414272	North Auckland
414273	North Auckland
414274	North Auckland
414275	North Auckland
414276	North Auckland
414277	North Auckland
414278	North Auckland
414279	North Auckland
414280	North Auckland
414281	North Auckland
414282	North Auckland
414283	North Auckland
414284	North Auckland
414285	North Auckland
414286	North Auckland
414287	North Auckland

Annexure Schedule: Contains 7 Pages.

Signature

Signed by Nicholas William Dovell Francis as Territorial Authority Representative on 06/07/2010 03:39 PM

***** End of Report *****

KAIPARA DISTRICT COUNCIL

CONSENT NOTICE
PURSUANT TO SECTION 221 OF THE
RESOURCE MANAGEMENT ACT 1991

In the matter of a Consent Notice issued pursuant to Section 221 of the Resource Management Act 1991 (*Act*) in respect of Resource Consents RM090281 and RM090281A (*Resource Consent*) for the subdivision (*Subdivision*) on survey plan DP 404128 showing Lots 1, 4-6, 8-10, 12, 13, 15-17, 19-27, 27a, 28, 28a, 29-33, 35, 35a, 36-60, 69, 70, 100-106, 200 and 202 (all inclusive) and on survey plan DP 430128 showing Lots 1 and 2 DP 430128.

I, Alan John McKerchar, the Principal Administrative Officer of the Kaipara District Council (*Council*), hereby certify that pursuant to the consents under RM090281 dated 18 April 2006 and RM090281A dated 18 November 2009, the following shall apply as conditions of such consents to be complied with on a continuing basis by the Owner as defined in the Act:

In relation to Lots 1, 4-6 (inclusive), 8, 9, 12, 13, 27A, 28, 28A, 29-33 (inclusive), 35, 35A, 36-38 (inclusive) on DP 404128 of the Subdivision

1 The Owner of each lot is required to be a shareholder or member of The Sanctuary Residents Association Incorporated formed to operate, maintain and administer those components of the communal wastewater treatment and disposal system for the Subdivision located on commonly owned land and administer monitoring of individual treatment systems connected to the communal system.

2 The Owner of each lot is required to enter into an ongoing contract for the maintenance of the individual treatment systems with an organisation approved by The Sanctuary Residents Association Incorporated .

3 In the event that The Sanctuary Residents Association Incorporated is wound up or liquidated, or ceases or fails to carry out its prescribed purposes, the Owners are deemed to be an unincorporated society for the purposes set out in paragraphs 1 and 2 of this Consent Notice.

In relation to Lots 10, 17, 19-23 (inclusive), 27, 39-60 (inclusive), 69 and 70 on DP 404128 and Lot 2 on DP 430128 of the Subdivision

4 The Owner acknowledges that the construction and use of on site wastewater disposal systems for each lot may require discharge permits from the Northland Regional Council and that advice on specific resource

consent requirements (if any) should be sought from the Northland Regional Council accordingly.

5 The Owner shall ensure that the wastewater treatment and disposal systems on each lot shall be designed by and installed under the supervision of a competent engineer with appropriate experience in wastewater systems or other suitable qualified person to the approval of the Council; and.

6 The Owners of each lot shall enter into an ongoing contract for the maintenance of the wastewater treatment and disposal systems on each lot and provide details to the entity formed to administer all matters associated with the maintenance of all on-site effluent disposal systems.

In relation to lots 1, 4-6 (inclusive), 8-10 (inclusive), 12, 13, 15-17 (inclusive), 19-27 (inclusive), 27a, 28, 28a, 29-33 (inclusive), 35, 35a, 36-60 (inclusive), 69 and 70 on DP 404128 and Lot 2 on DP 430128 of the Subdivision

7 The Owner shall have regard to the Engineering and Geotechnical Report (Job No. 4819) prepared by Hawthorne Geddes Engineers & Architects Ltd dated September 2004 (*the Hawthorne Geddes Report*).

8 The Owner of each Lot shall ensure that it complies with the recommendations of that report with respect to foundations and drainage at the time of development of the Lot.

9 The Owner of each Lot shall not erect or permit the erection of any building otherwise than within the identified building sites and additional building sites referred to in the Hawthorne Geddes Report, such sites being identified in respect of each lot on the table annexed to this consent notice as Schedule One.

10 The Owner shall comply with the building and landscaping guidelines for the Subdivision which have been approved by Council and shall ensure that any buildings on the lot be sited and constructed and the lots landscaped in accordance with those building and landscaping guidelines.

11 The Owner shall maintain any landscaping on the lot in accordance with the Landscape Amenity Enhancement Plan approved under Condition 2(bb) of Resource Consent. The areas of the landscaping on the lots to which this condition 9 apply are as set out in the table annexed to this consent notice as Schedule Two.

12 The Owner acknowledges that condition 10 above will be monitored by the Council for a period of five years from the date of completion of planting to

the reasonably satisfaction of Council, and that there will be a Council charge for this monitoring payable by the Owner.

13 The Owner shall not allow the planting of exotic vegetation that could pose a threat to the ecological values of the lots. This includes the introduction of invasive plant species, including those currently listed on the nationally banned for sale list (see N.R.C Regional Pest Management Strategy).

14 The Owner of each Lot acknowledges that it is required to be a member of The Sanctuary Residents Association Incorporated for so long as it is the owner of a Lot. The Owner of each Lot acknowledges that it shall not take steps to wind up or liquidate The Sanctuary Residents Association Incorporated without the Council's prior written consent.

In relation to lots 52 and 70 on DP 404128 of the Subdivision

15 The Owner acknowledges the presence of recorded archaeological sites in the Time Depth Heritage Consultants Archaeological Assessment Report and the protection given to these sites under the Historic Places Act 1993.

In relation to lots 1, 4-6 (inclusive), 8-10 (inclusive), 12, 13, 15-17 (inclusive), 19-27 (inclusive), 27a, 28, 28a, 29-33 (inclusive), 35, 35a, 36-60 (inclusive), 69 and 70 on DP 404128 and Lot 2 on DP 430128 of the Subdivision

16 The Owner of each Lot acknowledges that no further subdivision of the lot shall be permitted for a period of 10 years from the date of registration of this consent notice.

In relation to lots 1, 10, 13 and 15-17 (inclusive) on DP 404128 of the Subdivision

17 The Owner of each Lot must not use and must not permit the use of direct vehicular access from the Lot onto Cove Road.

In relation to Lots 100 and 101 on DP 404128 of the Subdivision

18 The Owner must take all practicable steps to protect and enhance the amenity, ecological and water quality values of the lakes on the Lots and must not use or permit the use of motorised craft on the lakes except by the Owner for dam maintenance or emergency purposes.

In relation to Lot 103 on DP 404128 of the Subdivision

19 The Owner must not use and must not permit the use of the Lot for any purpose other than recreation and recreation facilities and must not use or

permit the use of the Lot for residential development or commercial accommodation.

In relation to Lot 1 DP 430128 of the Subdivision

20 The Owner must not use or permit the use of the Lot for any purpose other than maintaining and enhancing its agricultural use and for effluent disposal and must not use or permit the use of the Lot for residential development or commercial accommodation.

Dated this day 16th of June 2010

AUTHENTICATED by the Chief Executive of the Council, Alan John McKerchar

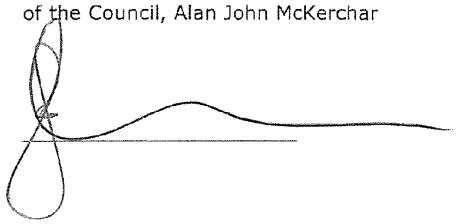

SCHEDULE ONE

Building sites and additional building sites

Lot	Building sites as shown on DP 404128	Additional building sites shown on DP 404128
Lot 1 on DP 404128	ZZ	
Lot 4 on DP 404128	ZY	
Lot 5 on DP 404128	ZX	
Lot 6 on DP 404128	ZW	
Lot 8 on DP 404128	ZV	
Lot 9 on DP 404128	ZU	
Lot 10 on DP 404128	ZT	
Lot 12 on DP 404128	ZS	
Lot 13 on DP 404128	ZQ	
Lot 15 on DP 404128	ZP	
Lot 16 on DP 404128	ZO	
Lot 17 on DP 404128	ZN	XP
Lot 19 on DP 404128	ZL	XE and XF
Lot 20 on DP 404128	ZM	XO
Lot 21 on DP 404128	ZK	
Lot 22 on DP 404128	ZJ	
Lot 23 on DP 404128	ZI	
Lot 24 on DP 404128	ZH	
Lot 25 on DP 404128	ZG	
Lot 26 on DP 404128	ZF	
Lot 27 on DP 404128	XR	
Lot 27a on DP 404128	ZD and ZE	
Lot 28 on DP 404128	ZC	
Lot 28a on DP 404128	ZB	
Lot 29 on DP 404128	ZA	
Lot 30 on DP 404128	YZ	
Lot 31 on DP 404128	YY	
Lot 32 on DP 404128	YX	
Lot 33 on DP 404128	YW	
Lot 35 on DP 404128	YV	
Lot 35a on DP 404128	YU	XN
Lot 36 on DP 404128	YT	XM
Lot 37 on DP 404128	YS	XL
Lot 38 on DP 404128	YR	XG and XK
Lot 39 on DP 404128	YQ	
Lot 40 on DP 404128	YP	XJ
Lot 41 on DP 404128	YO	XI
Lot 42 on DP 404128	YN	XH
Lot 43 on DP 404128	YM	
Lot 44 on DP 404128	YL	XD
Lot 45 on DP 404128	YJ	
Lot 46 on DP 404128	YI	
Lot 47 on DP 404128	YH	
Lot 48 on DP 404128	YG	

Lot	Building sites as shown on DP 404128	Additional building sites shown on DP 404128
Lot 49 on DP 404128	YF	
Lot 50 on DP 404128	YE	
Lot 51 on DP 404128	YD	
Lot 52 on DP 404128	YC	
Lot 53 on DP 404128	YB	
Lot 54 on DP 404128	YA	
Lot 55 on DP 404128	XZ	
Lot 56 on DP 404128	XY	
Lot 57 on DP 404128	XX	
Lot 58 on DP 404128	XW	
Lot 59 on DP 404128	XV	
Lot 60 on DP 404128	XU	
Lot 69 on DP 404128	XT	
Lot 70 on DP 404128	XQ and XS	
Lot 2 on DP 404128	YK	ZR

7

SCHEDULE TWO

Landscape enhancement areas

Lot	Landscape enhancement areas as shown on DP 404128
Lot 1 on DP 404128	C, D, P, CA, CE and CH
Lot 4 on DP 404128	E and CC
Lot 5 on DP 404128	F and CJ
Lot 6 on DP 404128	G
Lot 8 on DP 404128	H
Lot 9 on DP 404128	I
Lot 10 on DP 404128	J
Lot 12 on DP 404128	K
Lot 13 on DP 404128	L, N and O
Lot 17 on DP 404128	CT
Lot 19 on DP 404128	Y, Z, AG and AO
Lot 24 on DP 404128	CW
Lot 25 on DP 404128	AH
Lot 27 on DP 404128	AK
Lot 27a on DP 404128	AM
Lot 29 on DP 404128	AP
Lot 30 on DP 404128	AQ
Lot 31 on DP 404128	AR
Lot 32 on DP 404128	AS
Lot 33 on DP 404128	S and CU
Lot 35a on DP 404128	AU
Lot 36 on DP 404128	AV
Lot 37 on DP 404128	AW
Lot 38 on DP 404128	AX
Lot 102 on DP 404128	BQ
Lot 103 on DP 404128	BD
Lot 106 on DP 404128	BO
Lot 1 on DP 430128	BR
Lot 2 on DP 430128	BK and BL

View Instrument Details

Instrument No	12012486.3
Status	Registered
Date & Time Lodged	23 February 2021 12:23
Lodged By	Cameron, Nichole Julienne
Instrument Type	Consent Notice under s221(4)(a) Resource Management Act 1991

Affected Records of Title	Land District
973221	North Auckland
973222	North Auckland
973223	North Auckland
973224	North Auckland
973225	North Auckland
973226	North Auckland
973227	North Auckland
973228	North Auckland

Annexure Schedule Contains 4 Pages.

Signature

Signed by Christopher Calder Hamilton Allan as Territorial Authority Representative on 22/02/2021 11:57 AM

***** End of Report *****

IN THE MATTER of the Resource Management Act 1991 (**"Act"**)

A N D

IN THE MATTER of the subdivision of land shown in Deposited Plan 556753 (North Auckland Land Registration District) (**"Plan"**)

CONSENT NOTICE
(Section 221 of the Act)

KAIPARA DISTRICT COUNCIL (**"Council"**) being the territorial authority of the district within which the land described in the First Schedule below (**"Land"**) is located has consented to the subdivision of the Land as shown in the Plan, subject to the conditions of the Second Schedule below to be complied with on a continuing basis by the Owner (as defined in the Act).

FIRST SCHEDULE
(Land)

Lot 2 on Deposited Plan 430128 and 1/59 share Lot 100-103, 106, 200, 202 Deposited Plan 404128 and Lot 1 Deposited Plan 430128 and Lot 1 Deposited Plan 482523

SECOND SCHEDULE
(Conditions)

The Owner (as defined in the Act) must, on a continuing basis, to the satisfaction of the Council, comply with the following conditions of the Council's Subdivision Consent RM190258, namely:

1. In respect of Lots 81-84 and Lots 91 to 94 on the Plan (each a "Lot").

   (i) Earthworks, the location of buildings, building foundations and stormwater and wastewater disposal shall be subject to specific engineering design by a suitably qualified Chartered Professional Engineer having regard to any soil instability/saturation issues that may exist or arise as a result of the development. Design shall take into account the recommendations identified in the Engineering Suitability Report prepared by Hawthorn Geddes dated 12 July 2019 and submitted to Council with subdivision consent RM190258.

   (ii) At the time of lodging a building consent for a habitable building on the lots and before issuing a Code of Compliance for that building, a vehicle crossing and driveway must be

constructed which meets the requirements of the Kaipara District Council Engineering Standards 2011.

(iii) At the time of lodging a building consent, a site specific landscape plan prepared by a suitably qualified and experienced Landscape Architect shall be submitted to the Council for approval and be approved. The landscape plan shall refer to Appendix 10 - Building Site Landscape Planting Plan examples within the Assessment of Landscape and Visual Effects prepared by Hawthorn Landscape Architects dated 20 August 2019 and integrate any future buildings within each lot with the landscape, using planting that reflects the character of the surrounding landscape and should include but not be limited to the following:

- A description of the purpose and objectives of the planting.
- A plan of the planted areas detailing proposed plant species, plant sourcing, plant sizes at time of planting, plant locations, density of planting and timing of planting, height and density upon maturity.
- A programme of establishment and post establishment protection and maintenance (e.g. planting method, fertilising, weed removal / spraying, replacement of dead or poorly performing plants, watering, length of maintenance programme). Management of the vegetation within the lot shall be the responsibility of the Lot owner.
- Details of weed management.
- Details of certification process once established

(iv) All works described in the approved site specific landscape plan (above) shall be implemented to the satisfaction of the Council or their delegated representative within the next available planting season following approval of the plan. Evidence shall be prepared by a qualified and experienced landscape architect that the planting required has been implemented to the satisfaction of Council or their delegated representative.

(v) The planting undertaken in accordance with the approved Landscape Plan and the approved site specific landscape plan for this lot created by resource consent RM190258 shall be maintained in perpetuity to the satisfaction of Council or their delegated authority. Should the vegetation be removed or die off, equivalent landscape planting is to be undertaken immediately for the purposes of softening the overall effect of the development and protecting rural character and amenity values in the area.
Note: No plants listed in Section 6 of the Northland Regional Pest and Marine Pathway Management Plan 2017- 2027 are permitted.

(vi) All planting on site shall be maintained in accordance with the approved Ecological Enhancement Plan. Evidence of compliance with this requirement shall be provided to Council in writing by a suitably qualified ecologist five years from the date of issue of titles for RM190258. Maintenance of planting will be monitored by Council for a period of five years from the date of issuing of 224 certificate for RM190258. There will be a Council charge for this monitoring payable by the lot owner.

(vii) Ongoing weed and pest control shall be undertaken in accordance with the approved Ecological Enhancement Plan in perpetuity. Evidence of compliance with this requirement shall be provided to Council in writing by a suitably qualified ecologist five years from the date of issuing of 224 certificate for RM190258.

Weed and pest plant control will be monitored by Council for a period of five years from the date of issuing of 224 certificate for RM190258. There will be a Council charge for this monitoring payable by the lot owner.

(viii) The keeping of mustelids and rodents on the lots is prohibited. Cats shall be limited to no more than two cats for each lot and they shall be required to wear a bell when outside.

No cats or dogs shall be permitted within the conservation covenanted areas and appropriate signs/symbols to this effect shall be erected and maintained at any access points to the conservation covenanted areas.

(ix) Within the lots, dogs shall not be kept on the lot unless the following conditions are complied with:

1. Any dog kept on the lot shall be secured/contained at all times to ensure that they cannot roam into the covenant area on the lot or beyond the boundaries of the lot. Containment shall be demonstrated to the satisfaction of the Council's Team Leader Monitoring and Compliance and may be in the form of an "electronic pet containment fence", secure fenced area or dog run. For the purposes of this condition, "electronic pet containment fence" means a system installed or attached to the perimeter of a defined area (or wireless equivalent) which is designed to prevent dogs escaping by transmitting a digital or electronic signal to a receiver collar worn by the dog.

2. Ongoing compliance with this condition will be monitored by Council. There will be a Council charge for this monitoring payable by the lot owner.

(x) All buildings must be located within the identified building areas shown on the Plan.

Lot	DP	Record of Title	Building Site
81	556753	973221	N
82	556753	973222	O
83	556753	973223	P
84	556753	973224	Q
91	556753	973225	R
92	556753	973226	S
93	556753	973227	T
94	556753	973228	U

(xi) No buildings shall be constructed within the identified areas to be retained as open space within the lots.

(xii) Sufficient firefighting water supply shall be provided for any single residential dwelling on the lot(s) with a minimum volume of 10,000 litres and shall remain accessible and available all year round.

Sufficient firefighting water supply shall be provided for any commercial or industrial land use on the lot(s). Sufficient firefighting water supply is deemed to mean meeting full criteria of the Code of Practice for firefighting water supplies (SNZ PAS 4509:2008 New Zealand Fire Service Firefighting Water Supplies Code of Practice.

(xiii) All buildings shall be sited and constructed, and landscaping provided in accordance with the Sanctuary Building and Landscaping Guidelines.

(xiv) The site specific landscaping plan required above shall be accompanied by evidence of compliance with the Sanctuary Building and Landscaping Guidelines and associated consultation with the Sanctuary Residents Association who administer the guidelines.

(xv) At the time of building consent suitable engineering evidence/design shall be provided to demonstrate that on site stormwater attenuation will be provided to limit peak flows from impervious areas to less than 1.2l/sec/100m^2 impervious area during a 20% Annual Event Probability (AEP) storm event and 1.2l/sec/100m^2 impervious area during a 1% AEP storm event. The evidence/design shall take into account the findings and recommendations of the Stormwater Management Staging Letter prepared by Hawthorn Geddes dated 25 June 2020 and submitted to Council with subdivision consent RM190258.

(xvi) Future lot owners are advised that no physical telecommunication connections are provided and the Kaipara District Council will not be responsible for ensuring nor providing telecommunication connections to the lots.

DATED the 16th day of February 2021

SIGNED by)
KAIPARA DISTRICT COUNCIL)
by its authorised signatory)

Dina Tetzner

KAIPARA DISTRICT

Kaipara te Oranganui • Two Oceans Two Harbours

Rural Rapid Number Application
$42.00 Fee

KAIPARA DISTRICT COUNCIL

Office Use Only
New Number Allocated: _____

Number Request
(please tick appropriate box)

☐ New Number ☐ Replacement Number

The application fee of $42.00 (refer to Fees and Charges) must accompany this form.

Location of Property

Road Name: .....

Locality:.....

Valuation Number:.....

Legal Description:.....

Area *(approx)*:.....

Other Details:.....

.....

.....

Location of Entrance

In relation to neighboring entrances, start of road, bridges, etc **and** in relation to property boundary.
(eg. near western end of boundary approx. 300m from number 716)

.....

.....

.....

Enquirers Details

Name: .....

Address:.....

..... Phone Number: .....

Received by: ..... Date: .....

Receipt No. .....

Please return Completed Form to

Kaipara District Council
Roading Team
Private Bag 1001
Dargaville 0340

Attention: Customer Services

KAIPARA DISTRICT

Kaipara te Oranganui • Two Oceans Two Harbours

Vehicle Crossing Permit Application

KAIPARA DISTRICT COUNCIL

Application No .....

Resource Consent No .....
(only required if current RC exists of which a VC permit is a part of)

Applicants Details

Owner's Name .....

Postal Address .....

Contact Telephone No .....Email .....

Agent Name .....

Postal Address .....

Contact Telephone No .....Email .....

Send permit to: ☐ Owner ☐ Agent

Site Location

Street/Rapid No ..... Road Name .....

Town or Locality .....

Legal Description ..... Valuation No .....

Contractor/Traffic Management Plan Details

Please Note: ***Application will not be accepted by Council if a Plan is not attached for the location of your vehicle access. If constructing a vehicle crossing, your application will be rejected if a Traffic Management Plan is not attached.***

Name of person/firm constructing the crossing .....

Person in Charge of Traffic Management .....

Postal Address .....

Contact Telephone No .....Email .....

Crossing Information Required

Location:

Adjacent Road is: .....

☐ Urban (S05) ☐ Rural (S06)

☐ Sealed with kerb and channel ☐ Sealed with no kerb and channel ☐ Metalled

Intended Use

☐ Residential ☐ Commercial ☐ Other *(please specify)*.....

KAIPARA DISTRICT
Kaipara te Oranganui • Two Oceans Two Harbours

Vehicle Crossing Permit Application

KAIPARA DISTRICT COUNCIL

SITE LOCALITY PLAN

Map Showing Location of Vehicle Crossing	**Please show the following:** • Roads • Property boundaries • Location of entranceway – including **distances** from boundaries and adjacent numbered property entrances • Other identifiable land marks, buildings etc.
Property Description:	
Road Name:	

The Application Fee must be paid before permit the can be processed.
If the applicant has a current resource consent of which the Vehicle Crossing is a part of the fee to be charged is $345.00, an additional inspection fee will be charged as part of the consent application. For all other applications the fee is $485.00 which includes the pre and post approval inspections.

NB: A further $150.00 will be charged if an additional inspection is required.

Signed by Owner/Agent: …… Date: ..... ……

Office Use Only

Receipt No: ..... Date: .....

RCA consent (eg CAR/WAP) and/or RCA contract reference	

TRAFFIC MANAGEMENT PLAN (TMP) – SHORT FORM

*Complete **short form** if simple activity and RCA permits. Refer to the NZ Transport Agency's Traffic control devices manual, part 8 Code of practice for temporary traffic management (CoPTTM), section E, appendix A for a guide on how to complete each field.*

Organisations/ TMP reference	TMP reference:	Contractor:	Principal ***(Client)*:**			
			RCA:			
Location details and road characteristics	Road names and suburb		House no. / RPs ***(From and to)***	Road level	Permanent speed	AADT/Peak flows
Description of work activity						

Planned work programme

Start date		Time		End date		Time	
Consider significant stages, **for example:** • **road closures** • **detours** • **no activity periods.**							
Alternative dates if activity delayed							

Road aspects affected ***(delete either Yes or No to show which aspects are affected)***

Pedestrians affected?	**Yes No**	Property access affected?	**Yes No**	Traffic lanes affected?	**Yes No**
Cyclists affected?	**Yes No**	Restricted parking affected?	**Yes No**	Delays or queuing likely?	**Yes No**

TSL/ Diagram ***(see TSL decision matrix for guidance)***	TSL details as required **Approval of Temporary Speed Limits (TSL) are in terms of Section 5 of Land Transport Rule: Setting of Speed Limits 2003,Rule 54001** ***(List speed, length and location)***	Times ***(From and to)***	Dates ***(Start and finish)***	Diagram ref. no's ***(Layout drawings or TMDs)***
Attended day/ night	**A temporary maximum speed limit of km/h is hereby fixed for motor vehicles travelling over the length of m situated between (House no./RP) and (House no./RP) on (street or road name)**			
Unattended day/ night	**A temporary maximum speed limit of km/h is hereby fixed for motor vehicles travelling over the length of m situated between (House no./RP) and (House no./RP) on (street or road name)**			

RCA consent (eg CAR/WAP) and/or RCA contract reference	

Contingency plan		
If long queues form or delays exceed 5mins *(or any other period required by RCA)*, site to be disestablished or additional lanes made available.	**Adjust TMD to suit unforeseen circumstances *(eg weather or site overlaps with another work site)*.**	**Emergency services will be accommodated and access provided through the site as required.**
Add additional contingencies:		

Contact details

	Name	24/7 contact number	CoPTTM ID	Qualification	Expiry date
Principal					
TMC					
Engineers' representative					
Contractor					
STMS					
TC					
Others as required					

TMP preparation (or approval if STMS delegated authority to approve TMPs)

Delete the option that does not apply (either prepared or approved)

Prepared / Approved						
	Name	**Date**	***Signature***	***ID no.***	***Qualification***	***Expiry date***
This TMP meets CoPTTM requirements		Number of diagrams attached				
TMP returned for correction						
	Name	**Date**	***Signature***	***ID no.***	***Qualification***	***Expiry date***

Engineer/TMC to complete following section when approval or acceptance required

Approved by TMC or engineer ***(delete one)***						
	Name	**Date**	***Signature***	***ID no.***	***Qualification***	***Expiry date***
Acceptance by TMC ***(if required)***						
	Name	**Date**	***Signature***	***ID no.***	***Qualification***	***Expiry date***

Qualifier for engineer or TMC approval

RCA consent (eg CAR/WAP) and/or RCA contract reference	

Approval of this TMP authorises the use of any regulatory signs included in the TMP or attached traffic management diagrams.

This TMP is approved on the following basis:

1. To the best of the approving engineer's/TMC's judgment this TMP conforms to the requirements of CoPTTM.

2. This plan is approved on the basis that the activity, the location and the road environment have been correctly represented by the applicant. Any inaccuracy in the portrayal of this information is the responsibility of the applicant.

3. The STMS for the activity is reminded that it is the STMS's duty to postpone, cancel or modify operations due to the adverse traffic, weather or other conditions that affect the safety of this site.

23 July 2021

ACDL Trustee Limited
17 Pinefield Road
Whenuapai
Auckland 0618

Dear Sir or Madam,

Request for further information on project information memorandum / building consent application - section 48

Reference Number: 210441.1
Project Location: Robert Hastie Drive

Mangawhai
Project Description: New Single Storey 4 Bedroom Dwelling with Attached Double Garage and Swimming Pool

Processing of your building consent application in accordance with section 48 of the Act is currently in progress. To enable this work to be completed the following additional information / clarification is required to ensure compliance with the building code is demonstrated:

Main Building

Section 45: Consent Documents
RFI 1: I have identified other means of compliance within the consent documentation. Please confirm these are correct:
E2 - Alt sol
E3 - Alt - Gib Aqualine
G13/AS3/VM4
Please also advise of any other compliance paths different to AS1 and I will add these to the application.

Site Considerations
RFI 1: Please show on the elevations the contours and slopes surrounding the dwelling.

Miscellaneous - Other
RFI 1: The consent notice specifies the proposed buildings for Lot 81 must be located within the identified building areas shown on the Plan - building site N. Please provide evidence the proposed dwelling is within this area.

B1: Footings, Foundations (In-situ, masonry, SED)

RFI 1: Expansive soils is outside the scope of the Firth Ribraft Technical manual. The geotech report also notes that although a waffle slab is suitable, the foundation needs to be designed for expansive soils to AS2870. The consent notice requires building foundations to be the subject of specific engineering design by a suitably qualified Chartered Professional Engineer, taking into account the recommendations of the Hawthorn Geddes report dated 12 July 2019.
Please have a Chartered Professional Engineer review the design and provide calculations and PS1 to support the design. He will also need to review both geotechnical reports and reference this on his PS1.
RFI 1: Please provide a copy of the Engineering Suitability report by Hawthorn Geddes dated 12 July 2019. Please also supply a copy to Wiley Geotechnical Consultants Ltd for their information should they need to revise any of their report.

B1: Walls, Wall bracing, Posts, Beams

RFI 1: The wall bracing design does not demonstrate compliance. Please provide the following additional information.
A. Diaphragm is longer than 12m and design is outside scope of NZS3604:2011 requirements for diaphragms (see NZS3604:2011 5.6.1 - Diaphragms may be used to distribute horizontal loads. They shall be no longer than 12 m with an aspect ratio (length divided by width) no greater
than 2. Diaphragms shall be directly connected to bracing elements and
consist of either:
(a) A floor diaphragm complying with 7.3; or
(b) A ceiling diaphragm complying with 13.5.)
Please revise design or have a Chartered Professional Engineer review the design and provide a PS1 along with supporting docs.
B. Provide separated bracing calculations for the wing section of the dwelling as per NZS3604:2011 5.1.5, or alternatively have a CPEng review the entire bracing, provide calculations and PS1 to support the design for one set of bracing. (Note: you may also wish to used Gib Ezybrace system which has another alternative ref Gib bracing supplement attached to this RFI. We would need to see the calcs on the Gib Ezybrace software sheet and the percentages of bracing per wing).
RFI 1: Please specify post to beam fixing detail to ensure there is allowance for uplift as per NZS3604:2011 Sec 9.
RFI 1: Please ensure structural engineer reviews and include post footing and connection as shown on sheet 707 - outside scope of NZS3604:2011 and all foundations require CPEng as per consent notice.

B2: DURABILITY

RFI 1: Sheet 707 - Timber post is noted to be H1.2, framing appears to be acting as cavity battens also noted to be H1.2. There is no building wrap specified. I am concerned this structure will be subject to wetting and the treatment of timber specified is only suitable for dry situations. Please review this structure and provide evidence of compliance with B2.
RFI 1: Please provide coating and maintenance requirements for the cedar facings (to posts).

E1: Surface Water

RFI 1: Where the land is sloping towards the dwelling, please show how overland flow will be directed away from the dwelling ensuring this will not affect other properties. This may need to be included in the SW design for the site.

E1/VM 1: Drainage

RFI 1: Consent notice conditions require stormwater disposal to be designed by a suitable qualified Chartered Professional Engineer. There are specific requirements to the design as noted in the consent notice. Please have a CPEng design the SW disposal, includes calculations, drawings and how 10,000 ltr will be detained for fire fighting purposes and overflow. Ensure the engineer has a copy of all consent notices.

E2: Wall Cladding Systems

RFI 1: Please provide manufacturer details for the EZPanel applicable to this consent ie rebated slab edge, door sill to rebated slab, window and door details, corner junctions etc. If details presented in the plan set are different to manufacturer, please provide full summary for the alternative solution presented.

F4: Safety from Falling

RFI 1: Due to the height difference between the dwelling FFL and associated decks, and the land contours, please confirm whether any barriers are required to the decks where there may be a fall greater than 1m. Revised elevations may clarify this already.

F9: Restricting Access to Residential Pools

RFI 1: It appears that there will be extensive planting alongside the pool fencing which may provide climbable objects within 1200mm of the fencing. Please provide evidence of compliance with F9.3.3 - that the barrier is free of permanent objects or projections on the outside that could assist children in negotiating the barrier. (Refer F9/AS1 Fig 2).

RFI 1: Please provide further information to demonstrate that where the building forms all or part of an immediate pool area barrier, then windows opening from a building into the immediate pool area are constructed or positioned to restrict the passage of children. W0.01 restrictor stay not specified.

RFI 1: Please provide manufacturer technical specification for the pool barrier, installation details, PS1 for the glass barrier, pool gates and self closing latches.

When responding via email, just select "reply" which will automatically link your reply back to your application and ensure it receives prompt attention.

Please ensure that:

- Drawing amendments are clearly identified and document changes are referenced (e.g revision clouds);
- All attached files are in PDF format and all documents are printable at the correct scale;

- Maximum document size for printing is A3;
- All information is to be supplied within 28 days (or the application may be refused). Please keep us informed if additional time is required.

Your consent application has been temporarily placed on hold while we await this information.

Yours Faithfully,

Sharon Campbell
Contractor
On behalf of: Kaipara District Council

25 August 2021

ACDL Trustee Limited
17 Pinefield Road
Whenuapai
Auckland 0618

Dear Sir or Madam,

Request for further information on project information memorandum / building consent application - section 48

Reference Number: 210441.2
Project Location: Robert Hastie Drive

Mangawhai
Project Description: New Single Storey 4 Bedroom Dwelling with Attached Double Garage and Swimming Pool

Processing of your building consent application in accordance with section 48 of the Act is currently in progress. To enable this work to be completed the following additional information / clarification is required to ensure compliance with the building code is demonstrated:

Main Building

B1: Walls, Wall bracing, Posts, Beams
RFI 1: The wall bracing design does not demonstrate compliance. Please provide the following additional information.
A. Diaphragm is longer than 12m and design is outside scope of NZS3604:2011 requirements for diaphragms (see NZS3604:2011 5.6.1 - Diaphragms may be used to distribute horizontal loads. They shall be nolonger than 12 m with an aspect ratio (length divided by width) no greaterthan 2. Diaphragms shall be directly connected to bracing elements andconsist of either:
(a) A floor diaphragm complying with 7.3; or
(b) A ceiling diaphragm complying with 13.5.)
Please revise design or have a Chartered Professional Engineer review the design and provide a PS1 along with supporting docs. NOT RESOLVED - see RFI 2 below.

B. Provide separated bracing calculations for the wing section of the dwelling as per NZS3604:2011 5.1.5, or alternatively have a CPEng review the entire bracing, provide calculations and PS1 to support the design for

one set of bracing. (Note: you may also wish to used Gib Ezybrace system which has another alternative ref Gib bracing supplement attached to this RFI. We would need to see the calcs on the Gib Ezybrace software sheet and the percentages of bracing per wing). RESOLVED.

RFI 2: A. The diaphragm does not appear to be connected directly to the bracing elements below (Line C) as is required by NZS3604:2011. Please review this again.
RFI 1: Please specify post to beam fixing detail to ensure there is allowance for uplift as per NZS3604:2011 Sec 9. NOT RESOLVED - see RFI 2 below.

RFI 2: Proposed post fixing provides 7.5kN fixing, however I believe to comply with NZS3604:2011 Table 9.2, a 11.8kN connection is required to uplift. Please revise or clarify how compliance with B1 has been met (for roof areas outside the living and Master bedroom).

E2: Wall Cladding Systems
RFI 1: Please provide manufacturer details for the EZPanel applicable to this consent ie rebated slab edge, door sill to rebated slab, window and door details, corner junctions etc. If details presented in the plan set are different to manufacturer, please provide full summary for the alternative solution presented. NOTE RESOLVED - see RFI 2 below.

RFI 2: Sheet 701 was missing from the revised plan set. Please send through a copy with your response.

F9: Restricting Access to Residential Pools
RFI 1: It appears that there will be extensive planting alongside the pool fencing which may provide climbable objects within 1200mm of the fencing. Please provide evidence of compliance with F9.3.3 - that the barrier is free of permanent objects or projections on the outside that could assist children in negotiating the barrier. (Refer F9/AS1 Fig 2). NOT RESOLVED - see RFI 2 below.

RFI 2: Please see attached landscape plan that has been proposed. This does show extensive planting outside and along the pool barrier. Please review and show how compliance with F9 will be achieved.
RFI 1: Please provide manufacturer technical specification for the pool barrier, installation details, PS1 for the glass barrier, pool gates and self closing latches. NOT RESOLVED - see RFI 2 below.

RFI 2: We did receive information for the aluminium pool barrier, but we did not receive any information for the glass pool barrier. Please provide as per the previous request.

When responding via email, just select "reply" which will automatically link your reply back to your application and ensure it receives prompt attention.

Please ensure that:
- Drawing amendments are clearly identified and document changes are referenced (e.g revision clouds);
- All attached files are in PDF format and all documents are printable at the correct scale;
- Maximum document size for printing is A3;
- All information is to be supplied within 28 days (or the application may be refused). Please keep us informed if additional time is required.

Your consent application has been temporarily placed on hold while we await this information.

Yours Faithfully,

Sharon Campbell
Contractor
On behalf of: Kaipara District Council

27 August 2021

ACDL Trustee Limited
17 Pinefield Road
Whenuapai
Auckland 0618

Dear Sir or Madam,

Request for further information on project information memorandum / building consent application - section 48

Reference Number: 210441.3
Project Location: Robert Hastie Drive

Mangawhai
Project Description: New Single Storey 4 Bedroom Dwelling with Attached Double Garage and Swimming Pool

Processing of your building consent application in accordance with section 48 of the Act is currently in progress. To enable this work to be completed the following additional information / clarification is required to ensure compliance with the building code is demonstrated:

Main Building

F9: Restricting Access to Residential Pools
RFI 3: PS1 submitted for glass pool barrier is outdated. Please provide a current PS1.

When responding via email, just select "reply" which will automatically link your reply back to your application and ensure it receives prompt attention.

Please ensure that:
- Drawing amendments are clearly identified and document changes are referenced (e.g revision clouds);
- All attached files are in PDF format and all documents are printable at the correct scale;
- Maximum document size for printing is A3;
- All information is to be supplied within 28 days (or the application may be refused). Please keep us informed if additional time is required.

Your consent application has been temporarily placed on hold while we await this information.

Yours Faithfully,

Sharon Campbell
Contractor
On behalf of: Kaipara District Council

Form 5
Building consent - BC210441
Section 51, Building Act 2004

The building

Street address of building:	53 Robert Hastie Drive Mangawhai
Legal description of land where building is located:	Lot 81 DP 556753
Building name:	
Location of building within site/block number:	53 Robert Hastie Drive Mangawhai
Level/unit number:	0

The owner

Name of owner:	ACDL Trustee Limited
Contact person:	Lance Kendall
Mailing address:	17 Pinefield Road Whenuapai Auckland 0618
Street address/registered office:	
Phone number:	Landline: Mobile: 02102210567
Daytime:	No information provided
After hours:	No information provided
Facsimile number:	No information provided
Email address:	
Website:	No information provided

First point of contact for communications with the building consent authority:
Lisa Fletcher ; Mailing Address: 14 Fallow Street
Queenstown 9300; Mobile: 02102210567; Email: lisa@c3bc.co.nz

Building work

The following building work is authorised by this building consent:
New Single Storey 4 Bedroom Dwelling with Attached Double Garage and Swimming Pool

This building consent is issued under section 51 of the Building Act 2004. This building consent does not relieve the owner of the building (or proposed building) of any duty or responsibility under any other Act relating to or affecting the building (or proposed building). This building consent also does not permit the construction, alteration, demolition, or removal of the building (or proposed building) if that construction,

alteration, demolition, or removal would be in breach of any other Act.

Conditions

This building consent is subject to the following conditions:

Section 90 - Inspections by Building Consent Authorities: (1) Every building consent is subject to the condition that agents authorised by the building consent authority for the purposes of this section are entitled, at all times during normal working hours or while building work is being done, to inspect-
(a) land on which building work is being or is proposed to be carried out; and
(b) building work that has been or is being carried out on or off the building site; and
(c) any building.

(2) The provisions (if any) that are endorsed on a building consent in relation to inspection during the carrying out of building work must be taken to include the provisions of this section.

(3) In this section, inspection means the taking of all reasonable steps to ensure that building work is being carried out in accordance with a building consent.

Electrical Energy Works Certificate as per section 92 (4)

Ground bearing to be confirmed by a CPEng engineer or Geotechnical engineer

NOTE: The required PS4 and Specialist documentation are in support of the required Council Inspections Specified on the Form 5.
These do not negate the requirements for the Council Inspections but are additional to them.

Construction monitoring requirements
Please contact the following consultants directly to arrange the construction monitoring identified which they have been engaged to carry out.

- Wiley Geotechnical:
  Ground conditions, hardfill, pre-pour

Copies of all site reports/records must be provided to the Building Consent Authority as work proceeds for their records, please forward these to buildingsupport@kaipara.govt.nz referencing the building consent number.

Inspections

The following inspections are required:

- Siting and Site Scrape Inspection
- Pool Prepour
- Floor Slab
- Post Wrap / Cavity
- Post Line
- Final
- Prepour
- Wastepipes
- Framing / Pre-wrap
- Preline
- Drainage

Documents required

Prepour

- B1: Ground bearing certificate
- B1: Foundations - Construction monitoring records

Floor Slab

- B1: Slab - Construction monitoring records

Drainage

- E1: Stormwater drain leakage test and as-built plans
- G13: As-builts, drainlayer details, pipework test

Final

- G9: Energy works certificate
- G12: Water potability certification - Non NUO supply

Compliance schedule

A compliance schedule is not required for the building.

Attachments

Copies of the following documents are attached to this building consent:

- Advice notes
- Project Information Memorandum (PIM): BC210441

Signature: Sharon Campbell
Position: Contractor
On behalf of: Kaipara District Council
Issue Date: 30 August 2021

Advice notes

Swimming Pool Register: The swimming pool that was identified by the applicant when completing the the application form is recorded on the council swimming pool register. The owner has a statutory obligation to ensure that the pool is fenced in accordance with Building (Pools) Amendment Act 2016 and with New Zealand Building Code Clause F9 to prevent young children from gaining direct access to the pool.

Section 92 (2A) - Code Compliance Certificate Application - Restricted Building Work: An application for Code Compliance Certificate is required to be applied for within 24 months of the Building Consent issued date, please complete this within the AlphaOne system.
As the building work involves restricted building work, all licensed building practitioners who carry out or supervise restricted building work under this consent must on completion of the work provide the Owner and the Territorial Authority (Kaipara District Council) with a record of work, in the prescribed form (Form 6A), detailing what restricted building work has been carried out or supervised.
In accordance with S92 of the Building Act records of work must be included with the application for Code Compliance Certificate.

The records of building work may be submitted via the customer portal as follows:
Sign in;
Search for the appropriate project in My Applications;
Go to the Action menu by the application progress bar and select Upload Documents;
On the Miscellaneous document select attach file and upload your document.

Site Safety: Please ensure all appropriate site safety measures are provided throughout the contract works to comply with NZ Building Code Clause F5 and all occupational safety and health requirements.

Electrical Energy Works Certificate: The Building Consent Authority places full reliance of the issue of energy work certificates to verify that the installation and completion of electrical services comply with the provisions of New Zealand Building Code Clauses G9. Code compliance certificate will not be issued unless the energy works certificates identifies compliance with this specific code clause and confirms compliance with this building consent.

KDC AN46: On-site effluent disposal systems - An Installation and commissioning report verifying the system and all components have been installed and operate in conformity with the design is required upon completion in accordance with 6.2.5.4, AS/NZS1547(2012).

Waste water maintenance contract: A signed copy of a maintenance contract between the property owner and a suitably qualified wastewater maintenance contractor is required for all onsite waste water systems prior to issue of Code Compliance Certificate.

Ground Bearing - Confirmation of suitability of ground bearing conditions to support imposed loads will be

required at time of inspection and before commencement of pouring of any concrete.

KDC AN45 - **Compacted hardfill -** A PS4 - Construction review by a suitably qualified engineer is required to confirm compacted fill under building platform has adequate bearing capacity (100kPa minimum).

KDC AN08 - **As-built truss layout:** An "as built" truss layout, showing truss and top plate connectors, along with design verification data and lintel sizes outside the scope of NZS 3604 must be available on site at the Prewrap for the Kaipara District Council Building Consent Authority Inspector to collect to facilitate the inspection and retain for record purposes.

Waterproofing System Verification - As most internal water proofing systems rely on installation of multiple coats the Building Consent Authority will not undertake inspection of these. Verification will be required from the installer of the internal tanking systems to certify that the system has been installed in accordance with the building consent and manufacturer specifications.

KDC AN05 - **Swimming pool water supply:** A vacuum break should be provided on any feed likely to supply water to a swimming pool - typically, this would be an outdoor tap suitable for a hose connection.

KDC AN15 - **Effluent disposal system - limitation of inspections -** Inspection of any onsite effluent system by Kaipara District Council is limited to relevant "building work" which terminates at the discharge point to the septic tank/ effluent treatment system and excludes the effluent field/drip lines/bore discharge system from that point. The monitoring of the system function, including effluent field etc. is a function of the regional council. Northland Regional Council require that:- When the construction of the treatment and land application system or soakage hole is completed:- a) The work be certified by a suitably qualified and competent person (typically the designer or registered drainlayer) as having been carried out in accordance with the design plan; and b) A copy of the certificate shall be forwarded to Regional Council within twenty working days following the completion of the work. Applicants are advised that a code compliance certificate for any building work which includes an onsite effluent disposal system, will not be issued unless appropriate discharge approval has been confirmed by Regional Council.

Potable Water Supply - Confirmation of potability of the individual supply criteria of New Zealand Drinking Water Standards 1995, is required to be supplied as part of the documentation for code compliance certificate application. Proof of potability of water supply must be demonstrated before the code compliance certificate is issued by provision of suitable bacteriological and chemical test results from an approved laboratory. Sampling results provided from a sampling routine of one chemical and one bacteriological test from pipe work as close to the well head as possible, followed by two further bacteriological tests at 30 day intervals from the same sampling point will be accepted as giving adequate assessment of water quality.

KDC AN40.1.1 - **Smoke alarms:** Compliant and operating smoke alarms with hush facility shall be installed within 3 metres of every bedroom and on every level of the dwelling and will be checked at the time of final inspection.

ADDENDA TO THIS BUILDING CONSENT:

1. This building consent will lapse and be of no effect if the building work to which it relates does not commence within 12 months after the date of issue. The consent may be extended for any further period at the discretion of council.

2. No deviation or alteration from the original plans and specifications can be carried out without written approval of Council and no building may be converted to any other use other than that stated on the building consent.

3. IMPORTANT: YOU ARE FULLY RESPONSIBLE FOR ANY DAMAGE DONE TO ANY WORKS SUCH AS TELEPHONE CABLES, POWER CABLES, WATER MAINS, GAS MAINS, SEWERS, PIPES, FOOTPATHS, ROADS OR OTHER SERVICES.

4. As the property owner is responsible for the correct siting of all works in accordance with the NZ Building Code and the Resource Management Act, the owner must ascertain the true position of the survey pegs before work commences.

5. NOTICE THAT BUILDING WORK IS READY FOR INSPECTION. For the purposes of Section 222 of the Building Act 2004, and unless otherwise provided by the building consent, the owner or other person undertaking any building work shall give at least 2 working days notice of the covering up of any
   i) drainage or plumbing
   ii) excavation for a foundation
   iii) reinforcing steel for a foundation
   iv) timber required to have a specific moisture content
   v) other work required to give notice as a condition

6. Council MUST be notified at the completion of building work on the attached form.

BUILDING CONSENT FEES:

Please note that further fees may be required to be paid before a Code Compliance Certificate is issued for this Building Consent. All fees must be paid before a Code Compliance Certificate will be issued.

Project information memorandum

Section 34, Building Act 2004

Application

Owner:	ACDL Trustee Limited C/- Lisa Fletcher 14 Fallow Street Queenstown 9300
Issue Date:	16 July 2021

Project

Description:	New Single Storey 4 Bedroom Dwelling with Attached Double Garage and Swimming Pool
Intended use:	2.0 Housing: 2.0.2 Detached Dwelling
Location:	Robert Hastie Drive Mangawhai
Legal description:	Lot 81 DP 556753
Valuation number:	0122008878

Please Note: This is not an approval to start building work. Please ensure your Building Consent is issued prior to commencing any work. Upon receiving your building consent please check carefully and ensure that compliance with any Conditions, District Planning restrictions or Resource Consent conditions are satisfied. The information below should be read with the understanding that should changes be made at building consent stage then this may alter the requirements listed below.

This project information memorandum does NOT constitute a building consent.

Heritage status of the building

Building work associated with this project will not be affecting land or structures that have heritage status. This project is exempt from the rules of the district plan that relate to heritage buildings.

Notable trees

Council is not aware of there being any notable trees associated with this site. Therefore the project is exempt from the rules of the District Plan that relate to Notable Trees.

Special features of the land concerned

There are no known special features of the land concerned - this includes potential natural hazards, or the likely presence of hazardous contaminants that is likely to be relevant to the design and construction or alteration of the building or proposed buildings; and that is known to the Territorial Authority; and that is not apparent from the district plan under the Resource Management Act 1991.

"Land concerned" means the land on which the proposed building work is to be carried out; and includes any

other land likely to affect or be affected by the building work.

"Special feature of the land concerned" includes, without limitation, potential natural hazards, or the likely presence of hazardous contaminants, that -
a) are likely to be relevant to the design and construction or alteration of the building or proposed building; and
b) is known to the Territorial Authority; and
c) is not apparent from the District Plan under the Resource Management Act 1991.

Other information
Once a Building Consent is issued, the Council will follow up on building work not completed within two years of building consent issue.

A Building Consent lapses and is of no effect if the building work has not been started within 12 months of the date of issue.

If the building is public premises it may not be occupied until either a Code Compliance Certificate or Certificate for Public Use has been issued.

If the building is wholly or partly a dam, a Project Information Memorandum and Building Consent must be obtained from the regional authority.

The Northland Regional Council has a register of contaminated sites. Please contact them on 0800 002 004 if you suspect that your property may be contaminated e.g. historic timber treatment sites, service stations, landfill sites.

Please check your Certificate of Title for any encumbrances (such as easements, section 73 notice) before you make an application for a Building Consent.

All archaeological sites are protected under the provisions of the Historic Places Act 1993. If subsurface archaeological evidence (shell, midden, hangi, storage pits, etc) should be unearthed during construction, work should cease in the immediate vicinity of the remains and the Historic Places Trust should be contacted.

The proposed project complies with the District Plan zoning as it does meet the Rural Zone Rule with a Harbour Overlay.

Consent Notice 8509265.4 12012486.1 12012486.3

Please be advised there are consent notices registered against this property. A breach of these conditions may result in legal action.

Council's desktop assessment has found that the site wind zone rating is high

The Council's desktop assessment has found that the site exposure zone is zone C - Inland

Council's desktop assessment has found that the site wind zone rating is high

Development Contributions do not apply to this project.

The proposed vehicle access (gradient / width / length) needs to comply with the requirements of the District Plan / Council's Engineering Standards. Attached if required, for your use, is a copy of the crossing application form.
Our system shows that the property does not have a registered Council street number.

ATTACHMENTS:
-Consent Notices 8509265.4 12012486.1 12012486.3
-Vehicle Crossing application form
- Rapid/ Urban Street Number application Form

Notes:

1. The information supplied in the sections of this project information memorandum is specific to the building project to which the application relates by reference to Council files and records. No property inspection, or title search, has been undertaken. To enable the Council to measure the accuracy of this document based on our current records we would appreciate your response should you find any information contained herein which may be considered to be incorrect or omitted. Please telephone the Council (09) 439 3123.

2. The Council has used its best endeavors to ensure that all information provided in this project information memorandum is correct and complete in all material respects. In the event that a material error or omission can be proven the Council's liability, whether in contract or in tort shall be limited to the fee paid to Council to obtain this report.

3. This information reflects the Kaipara District Council's current understanding of information which is relevant to the project. This is based only on the information thus far provided to it and held on record. As a result the Council is not in a position to warrant that the information is complete or without error and accepts no liability for any inaccuracy in, or omission from, this information.

4. The information contained in this project information memorandum is current at the date the memorandum is issued. Further relevant information may come into the Council's possession subsequent to the date of issue.

RECORD OF TITLE
UNDER LAND TRANSFER ACT 2017
FREEHOLD

Search Copy

R.W. Muir
Registrar-General
of Land

Identifier **973221**
Land Registration District **North Auckland**
Date Issued 23 February 2021

Prior References
781590

Estate Fee Simple
Area 5903 square metres more or less
Legal Description Lot 81 Deposited Plan 556753
Registered Owners
ACDL Trustee Limited

Estate Fee Simple - 1/826 share
Area 96.8877 hectares more or less
Legal Description Lot 100-103, 106, 200, 202 Deposited Plan 404128 and Lot 1 Deposited Plan 430128 and Lot 1 Deposited Plan 482523
Registered Owners
ACDL Trustee Limited

Interests

Subject to a water supply right over part Lot 100 DP 404128 marked B on DP 404128 specified in Easement Certificate 974832.2 - 19.5.1981 at 11.52 am

Appurtenant to the parts Lot 1 DP 482523 and Lot 202 DP 404128 formerly contained in NA133C/596 are rights of way specified in Easement Certificate C414433.4 - 17.9.1992 at 1:36 pm

Appurtenant to the parts Lot 1 DP 482523 and Lot 202 DP 404128 formerly contained in NA133C/596 are rights of way specified in Easement Certificate D549922.4 - 17.10.2000 at 10.22 am

The easements specified in Easement Certificate D549922.4 are subject to Section 351E (1) (a) Municipal Corporations Act 1954

Subject to a right to drain sewage over part Lot 1 DP 430128 marked BJ on DP 430128 created by Easement Instrument 8138731.3 - 20.10.2009 at 9:12 am

Appurtenant to Lot 100 DP 404128 herein is a right of way and appurtenant to Lot 1 DP 430128 herein is a right to convey stormwater created by Easement Instrument 8138731.3 - 20.10.2009 at 9:12 am

The easements created by Easement Instrument 8138731.3 are subject to Section 243 (a) Resource Management Act 1991

Subject to a right (in gross) to convey telecommunications and computer media over part Lot 200 DP 404128 marked BN and over part Lot 202 DP 404128 marked BP all on DP 404128 in favour of Telecom New Zealand Limited created by Easement Instrument 8138731.4 - 20.10.2009 at 9:12 am

The easements created by Easement Instrument 8138731.4 are subject to Section 243 (a) Resource Management Act 1991

Identifier **973221**

Subject to a right (in gross) to convey electricity over part Lot 200 DP 404128 marked BN and over part Lot 202 DP 404128 marked BP all on DP 404128 in favour of Northpower Limited created by Easement Instrument 8138731.6 - 20.10.2009 at 9:12 am

The easements created by Easement Instrument 8138731.6 are subject to Section 243 (a) Resource Management Act 1991

8138731.7 Conservation Covenant pursuant to Section 77 Reserves Act 1977 - 20.10.2009 at 9:12 am

8138731.8 Conservation Covenant pursuant to Section 77 Reserves Act 1977 - 20.10.2009 at 9:12 am

8509265.4 Consent Notice pursuant to Section 221 Resource Management Act 1991 - 6.7.2010 at 3:48 pm (affects Lots 100, 101 &103 DP 404128 and Lots 1 DP 430128 and Lot 81 DP 556753)

Land Covenant in Easement Instrument 8581297.2 - 17.2.2011 at 10:51 am

8581297.3 Encumbrance to The Sanctuary Residents Association Incorporated – 17.2.2011 at 10:51 am (Affects part Lot 1 DP 482523 formerly comprised in CT's 524301, 524302, 524303, 524306, 524308, 524309, 524312, 524315, 524316, 524318, 524328, 524335, 524342, 524343, 524346, 524349, 524351, 524298)

8581297.4 Encumbrance to The Sanctuary Residents Association Incorporated – 17.2.2011 at 10:51 am (Affects Lot 81 DP 556753, Lot 1 DP 430128 and Lot 100-103, 106, 200, 202 DP 404128 and part Lot 1 DP 482523 formerly comprised in CT's 517272, 524294, 524295, 524296, 524297, 524299, 524300, 524304, 524305, 524307, 524310, 524311, 524313, 524314, 524317, 524319, 524320, 524321, 524322, 524323, 524324, 524325, 524326, 524327, 524329, 524330, 524331, 524332, 524333, 524334, 524336, 524337, 524338, 524339, 524340, 524341, 524344, 524345, 524347, 524348, 524350)

Land Covenant in Easement Instrument 9542293.3 - 7.2.2014 at 12:23 pm (affects Lot 1 DP 482523)

12012486.1 Variation of Consent Notice 8509265.4 pursuant to Section 221(5) Resource Management Act 1991 - 23.2.2021 at 12:23 pm

Subject to Section 241(2) Resource Management Act 1991 (affects DP 556753)

12012486.3 Consent Notice pursuant to Section 221 Resource Management Act 1991 - 23.2.2021 at 12:23 pm(Affects Lot 81 DP 556753)

12012486.5 Conservation Covenant pursuant to Section 77 Reserves Act 1977 - 23.2.2021 at 12:23 pm (Affects Lot 81 DP 556753)

Land Covenant (in gross) in favour of The Santuary Residents Association Incorporated created by Covenant Instrument 12028708.1 - 26.3.2021 at 2:55 pm (Affects Lot 81 DP 556753)

Identifier **973221**

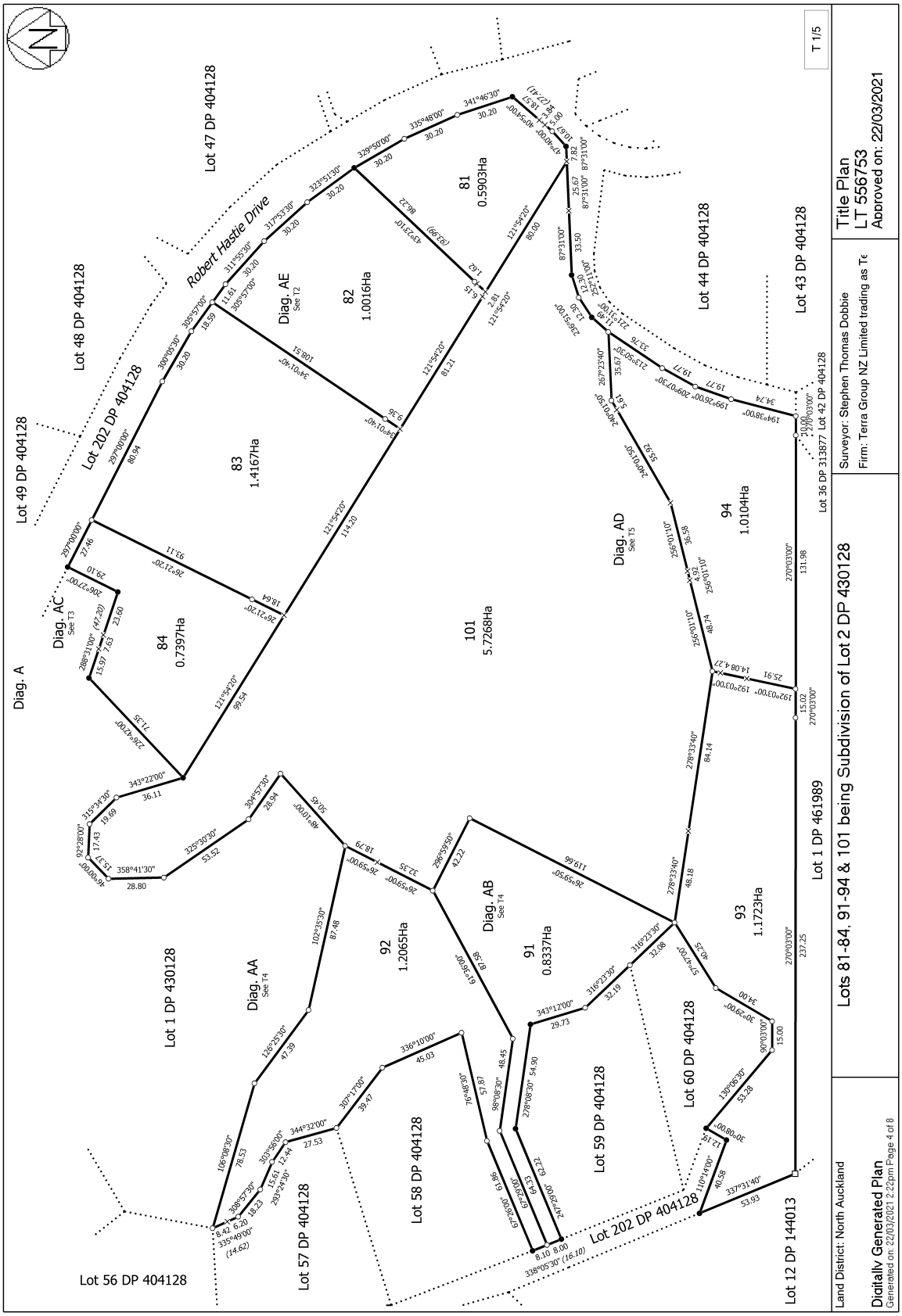

View Instrument Details

Instrument No	12012486.1
Status	Registered
Date & Time Lodged	23 February 2021 12:23
Lodged By	Cameron, Nichole Julienne
Instrument Type	Variation of Consent Notice Condition under s221(5) Resource Management Act 1991

Affected Records of Title	**Land District**
781590	North Auckland

Affected Instrument Consent Notice under s221(4)(a) Resource Management Act 1991 8509265.4

Annexure Schedule Contains 1 Pages.

Signature

Signed by Christopher Calder Hamilton Allan as Territorial Authority Representative on 22/02/2021 11:56 AM

***** End of Report *****

© Copyright: Land Information New Zealand

VARIATION OF CONSENT NOTICE
PURSUANT TO SECTION 221 (3)
RESOURCE MANAGEMENT ACT 1991

IN THE MATTER of Record of Title No 781590 (North Auckland Land Registration District)

AND

IN THE MATTER of a Consent Notice 8509265.4 (North Auckland Land Registration District)

Pursuant to Section 221(3) of the Resource Management Act 1991 the **KAIPARA DISTRICT COUNCIL** ("the Council") being satisfied that the conditions of subdivision imposed in respect of Lot 2 on Deposited Plan 430128 and 1/59 share Lot 100-103, 106, 200, 202 Deposited Plan 404128 and Lot 1 Deposited Plan 430128 and Lot 1 Deposited Plan 482523 where such conditions of consent were to be complied with on a continuing basis and were secured by way of a consent notice may now be varied by deleting from clause 16 of Consent Notice 8509265.4 referred to Lot 2 on Deposited Plan 430128 and 1/59 share Lot 100-103, 106, 200, 202 Deposited Plan 404128 and Lot 1 Deposited Plan 430128 and Lot 1 Deposited Plan 482523 to the intent that:

Reference to Lot 2 DP 430128 of the Subdivision in clause 16 of Consent Notice 8509265.4 shall be cancelled.

It is hereby agreed between the registered proprietor of the land contained in Record of Title No 781590 and the Council that Consent Notice No. 8509265.4 (North Auckland Lands Registration District) ("the Consent Notice") can be varied and the parties request the District Land Registrar to make an entry in the register and on any relevant instrument of title noting that the Consent Notice has been varied.

In all other respects Consent Notice 8509265.4 remains unaltered

DATED this 4th day of February 2021

SIGNED by
KAIPARA DISTRICT COUNCIL
by its authorised signatory

Dina Tetzner

View Instrument Details

Instrument No	8509265.4
Status	Registered
Date & Time Lodged	06 July 2010 15:48
Lodged By	Shepherd, Andrea Jane
Instrument Type	Consent Notice under s221(4)(a) Resource Management Act 1991

Affected Computer Registers	Land District
414229	North Auckland
414230	North Auckland
414231	North Auckland
414232	North Auckland
414233	North Auckland
414234	North Auckland
414235	North Auckland
414236	North Auckland
414237	North Auckland
414238	North Auckland
414239	North Auckland
414240	North Auckland
414241	North Auckland
414242	North Auckland
414243	North Auckland
414244	North Auckland
414245	North Auckland
414246	North Auckland
414247	North Auckland
414248	North Auckland
414249	North Auckland
414250	North Auckland
414251	North Auckland
414252	North Auckland
414253	North Auckland
414254	North Auckland
414255	North Auckland
414256	North Auckland
414257	North Auckland
414258	North Auckland
414259	North Auckland
414260	North Auckland
414261	North Auckland
414262	North Auckland
414263	North Auckland
414264	North Auckland
414265	North Auckland
414266	North Auckland
414267	North Auckland
414268	North Auckland
414269	North Auckland

© Copyright: Land Information New Zealand

Affected Computer Registers	Land District
414270	North Auckland
414271	North Auckland
414272	North Auckland
414273	North Auckland
414274	North Auckland
414275	North Auckland
414276	North Auckland
414277	North Auckland
414278	North Auckland
414279	North Auckland
414280	North Auckland
414281	North Auckland
414282	North Auckland
414283	North Auckland
414284	North Auckland
414285	North Auckland
414286	North Auckland
414287	North Auckland

Annexure Schedule: Contains 7 Pages.

Signature

Signed by Nicholas William Dovell Francis as Territorial Authority Representative on 06/07/2010 03:39 PM

***** End of Report *****

KAIPARA DISTRICT COUNCIL

CONSENT NOTICE
PURSUANT TO SECTION 221 OF THE
RESOURCE MANAGEMENT ACT 1991

In the matter of a Consent Notice issued pursuant to Section 221 of the Resource Management Act 1991 (*Act*) in respect of Resource Consents RM090281 and RM090281A (*Resource Consent*) for the subdivision (*Subdivision*) on survey plan DP 404128 showing Lots 1, 4-6, 8-10, 12, 13, 15-17, 19-27, 27a, 28, 28a, 29-33, 35, 35a, 36-60, 69, 70, 100-106, 200 and 202 (all inclusive) and on survey plan DP 430128 showing Lots 1 and 2 DP 430128.

I, Alan John McKerchar, the Principal Administrative Officer of the Kaipara District Council (*Council*), hereby certify that pursuant to the consents under RM090281 dated 18 April 2006 and RM090281A dated 18 November 2009, the following shall apply as conditions of such consents to be complied with on a continuing basis by the Owner as defined in the Act:

In relation to Lots 1, 4-6 (inclusive), 8, 9, 12, 13, 27A, 28, 28A, 29-33 (inclusive), 35, 35A, 36-38 (inclusive) on DP 404128 of the Subdivision

1 The Owner of each lot is required to be a shareholder or member of The Sanctuary Residents Association Incorporated formed to operate, maintain and administer those components of the communal wastewater treatment and disposal system for the Subdivision located on commonly owned land and administer monitoring of individual treatment systems connected to the communal system.

2 The Owner of each lot is required to enter into an ongoing contract for the maintenance of the individual treatment systems with an organisation approved by The Sanctuary Residents Association Incorporated .

3 In the event that The Sanctuary Residents Association Incorporated is wound up or liquidated, or ceases or fails to carry out its prescribed purposes, the Owners are deemed to be an unincorporated society for the purposes set out in paragraphs 1 and 2 of this Consent Notice.

In relation to Lots 10, 17, 19-23 (inclusive), 27, 39-60 (inclusive), 69 and 70 on DP 404128 and Lot 2 on DP 430128 of the Subdivision

4 The Owner acknowledges that the construction and use of on site wastewater disposal systems for each lot may require discharge permits from the Northland Regional Council and that advice on specific resource

consent requirements (if any) should be sought from the Northland Regional Council accordingly.

5 The Owner shall ensure that the wastewater treatment and disposal systems on each lot shall be designed by and installed under the supervision of a competent engineer with appropriate experience in wastewater systems or other suitable qualified person to the approval of the Council; and.

6 The Owners of each lot shall enter into an ongoing contract for the maintenance of the wastewater treatment and disposal systems on each lot and provide details to the entity formed to administer all matters associated with the maintenance of all on-site effluent disposal systems.

In relation to lots 1, 4-6 (inclusive), 8-10 (inclusive), 12, 13, 15-17 (inclusive), 19-27 (inclusive), 27a, 28, 28a, 29-33 (inclusive), 35, 35a, 36-60 (inclusive), 69 and 70 on DP 404128 and Lot 2 on DP 430128 of the Subdivision

7 The Owner shall have regard to the Engineering and Geotechnical Report (Job No. 4819) prepared by Hawthorne Geddes Engineers & Architects Ltd dated September 2004 (*the Hawthorne Geddes Report*).

8 The Owner of each Lot shall ensure that it complies with the recommendations of that report with respect to foundations and drainage at the time of development of the Lot.

9 The Owner of each Lot shall not erect or permit the erection of any building otherwise than within the identified building sites and additional building sites referred to in the Hawthorne Geddes Report, such sites being identified in respect of each lot on the table annexed to this consent notice as Schedule One.

10 The Owner shall comply with the building and landscaping guidelines for the Subdivision which have been approved by Council and shall ensure that any buildings on the lot be sited and constructed and the lots landscaped in accordance with those building and landscaping guidelines.

11 The Owner shall maintain any landscaping on the lot in accordance with the Landscape Amenity Enhancement Plan approved under Condition 2(bb) of Resource Consent. The areas of the landscaping on the lots to which this condition 9 apply are as set out in the table annexed to this consent notice as Schedule Two.

12 The Owner acknowledges that condition 10 above will be monitored by the Council for a period of five years from the date of completion of planting to

the reasonably satisfaction of Council, and that there will be a Council charge for this monitoring payable by the Owner.

13 The Owner shall not allow the planting of exotic vegetation that could pose a threat to the ecological values of the lots. This includes the introduction of invasive plant species, including those currently listed on the nationally banned for sale list (see N.R.C Regional Pest Management Strategy).

14 The Owner of each Lot acknowledges that it is required to be a member of The Sanctuary Residents Association Incorporated for so long as it is the owner of a Lot. The Owner of each Lot acknowledges that it shall not take steps to wind up or liquidate The Sanctuary Residents Association Incorporated without the Council's prior written consent.

In relation to lots 52 and 70 on DP 404128 of the Subdivision

15 The Owner acknowledges the presence of recorded archaeological sites in the Time Depth Heritage Consultants Archaeological Assessment Report and the protection given to these sites under the Historic Places Act 1993.

In relation to lots 1, 4-6 (inclusive), 8-10 (inclusive), 12, 13, 15-17 (inclusive), 19-27 (inclusive), 27a, 28, 28a, 29-33 (inclusive), 35, 35a, 36-60 (inclusive), 69 and 70 on DP 404128 and Lot 2 on DP 430128 of the Subdivision

16 The Owner of each Lot acknowledges that no further subdivision of the lot shall be permitted for a period of 10 years from the date of registration of this consent notice.

In relation to lots 1, 10, 13 and 15-17 (inclusive) on DP 404128 of the Subdivision

17 The Owner of each Lot must not use and must not permit the use of direct vehicular access from the Lot onto Cove Road.

In relation to Lots 100 and 101 on DP 404128 of the Subdivision

18 The Owner must take all practicable steps to protect and enhance the amenity, ecological and water quality values of the lakes on the Lots and must not use or permit the use of motorised craft on the lakes except by the Owner for dam maintenance or emergency purposes.

In relation to Lot 103 on DP 404128 of the Subdivision

19 The Owner must not use and must not permit the use of the Lot for any purpose other than recreation and recreation facilities and must not use or

permit the use of the Lot for residential development or commercial accommodation.

In relation to Lot 1 DP 430128 of the Subdivision

20 The Owner must not use or permit the use of the Lot for any purpose other than maintaining and enhancing its agricultural use and for effluent disposal and must not use or permit the use of the Lot for residential development or commercial accommodation.

Dated this day 16th of June 2010

AUTHENTICATED by the Chief Executive of the Council, Alan John McKerchar

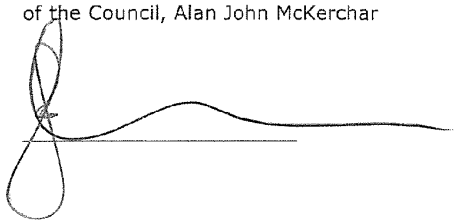

SCHEDULE ONE

Building sites and additional building sites

Lot	Building sites as shown on DP 404128	Additional building sites shown on DP 404128
Lot 1 on DP 404128	ZZ	
Lot 4 on DP 404128	ZY	
Lot 5 on DP 404128	ZX	
Lot 6 on DP 404128	ZW	
Lot 8 on DP 404128	ZV	
Lot 9 on DP 404128	ZU	
Lot 10 on DP 404128	ZT	
Lot 12 on DP 404128	ZS	
Lot 13 on DP 404128	ZQ	
Lot 15 on DP 404128	ZP	
Lot 16 on DP 404128	ZO	
Lot 17 on DP 404128	ZN	XP
Lot 19 on DP 404128	ZL	XE and XF
Lot 20 on DP 404128	ZM	XO
Lot 21 on DP 404128	ZK	
Lot 22 on DP 404128	ZJ	
Lot 23 on DP 404128	ZI	
Lot 24 on DP 404128	ZH	
Lot 25 on DP 404128	ZG	
Lot 26 on DP 404128	ZF	
Lot 27 on DP 404128	XR	
Lot 27a on DP 404128	ZD and ZE	
Lot 28 on DP 404128	ZC	
Lot 28a on DP 404128	ZB	
Lot 29 on DP 404128	ZA	
Lot 30 on DP 404128	YZ	
Lot 31 on DP 404128	YY	
Lot 32 on DP 404128	YX	
Lot 33 on DP 404128	YW	
Lot 35 on DP 404128	YV	
Lot 35a on DP 404128	YU	XN
Lot 36 on DP 404128	YT	XM
Lot 37 on DP 404128	YS	XL
Lot 38 on DP 404128	YR	XG and XK
Lot 39 on DP 404128	YQ	
Lot 40 on DP 404128	YP	XJ
Lot 41 on DP 404128	YO	XI
Lot 42 on DP 404128	YN	XH
Lot 43 on DP 404128	YM	
Lot 44 on DP 404128	YL	XD
Lot 45 on DP 404128	YJ	
Lot 46 on DP 404128	YI	
Lot 47 on DP 404128	YH	
Lot 48 on DP 404128	YG	

Lot	Building sites as shown on DP 404128	Additional building sites shown on DP 404128
Lot 49 on DP 404128	YF	
Lot 50 on DP 404128	YE	
Lot 51 on DP 404128	YD	
Lot 52 on DP 404128	YC	
Lot 53 on DP 404128	YB	
Lot 54 on DP 404128	YA	
Lot 55 on DP 404128	XZ	
Lot 56 on DP 404128	XY	
Lot 57 on DP 404128	XX	
Lot 58 on DP 404128	XW	
Lot 59 on DP 404128	XV	
Lot 60 on DP 404128	XU	
Lot 69 on DP 404128	XT	
Lot 70 on DP 404128	XQ and XS	
Lot 2 on DP 404128	YK	ZR

7

SCHEDULE TWO

Landscape enhancement areas

Lot	Landscape enhancement areas as shown on DP 404128
Lot 1 on DP 404128	C, D, P, CA, CE and CH
Lot 4 on DP 404128	E and CC
Lot 5 on DP 404128	F and CJ
Lot 6 on DP 404128	G
Lot 8 on DP 404128	H
Lot 9 on DP 404128	I
Lot 10 on DP 404128	J
Lot 12 on DP 404128	K
Lot 13 on DP 404128	L, N and O
Lot 17 on DP 404128	CT
Lot 19 on DP 404128	Y, Z, AG and AO
Lot 24 on DP 404128	CW
Lot 25 on DP 404128	AH
Lot 27 on DP 404128	AK
Lot 27a on DP 404128	AM
Lot 29 on DP 404128	AP
Lot 30 on DP 404128	AQ
Lot 31 on DP 404128	AR
Lot 32 on DP 404128	AS
Lot 33 on DP 404128	S and CU
Lot 35a on DP 404128	AU
Lot 36 on DP 404128	AV
Lot 37 on DP 404128	AW
Lot 38 on DP 404128	AX
Lot 102 on DP 404128	BQ
Lot 103 on DP 404128	BD
Lot 106 on DP 404128	BO
Lot 1 on DP 430128	BR
Lot 2 on DP 430128	BK and BL

View Instrument Details

Instrument No	12012486.3
Status	Registered
Date & Time Lodged	23 February 2021 12:23
Lodged By	Cameron, Nichole Julienne
Instrument Type	Consent Notice under s221(4)(a) Resource Management Act 1991

Affected Records of Title	Land District
973221	North Auckland
973222	North Auckland
973223	North Auckland
973224	North Auckland
973225	North Auckland
973226	North Auckland
973227	North Auckland
973228	North Auckland

Annexure Schedule Contains 4 Pages.

Signature

Signed by Christopher Calder Hamilton Allan as Territorial Authority Representative on 22/02/2021 11:57 AM

***** End of Report *****

© Copyright: Land Information New Zealand

IN THE MATTER of the Resource Management Act 1991 (**"Act"**)

A N D

IN THE MATTER of the subdivision of land shown in Deposited Plan 556753 (North Auckland Land Registration District) (**"Plan"**)

CONSENT NOTICE
(Section 221 of the Act)

KAIPARA DISTRICT COUNCIL (**"Council"**) being the territorial authority of the district within which the land described in the First Schedule below (**"Land"**) is located has consented to the subdivision of the Land as shown in the Plan, subject to the conditions of the Second Schedule below to be complied with on a continuing basis by the Owner (as defined in the Act).

FIRST SCHEDULE
(Land)

Lot 2 on Deposited Plan 430128 and 1/59 share Lot 100-103, 106, 200, 202 Deposited Plan 404128 and Lot 1 Deposited Plan 430128 and Lot 1 Deposited Plan 482523

SECOND SCHEDULE
(Conditions)

The Owner (as defined in the Act) must, on a continuing basis, to the satisfaction of the Council, comply with the following conditions of the Council's Subdivision Consent RM190258, namely:

1. In respect of Lots 81-84 and Lots 91 to 94 on the Plan (each a "Lot").

   (i) Earthworks, the location of buildings, building foundations and stormwater and wastewater disposal shall be subject to specific engineering design by a suitably qualified Chartered Professional Engineer having regard to any soil instability/saturation issues that may exist or arise as a result of the development. Design shall take into account the recommendations identified in the Engineering Suitability Report prepared by Hawthorn Geddes dated 12 July 2019 and submitted to Council with subdivision consent RM190258.

   (ii) At the time of lodging a building consent for a habitable building on the lots and before issuing a Code of Compliance for that building, a vehicle crossing and driveway must be

constructed which meets the requirements of the Kaipara District Council Engineering Standards 2011.

(iii) At the time of lodging a building consent, a site specific landscape plan prepared by a suitably qualified and experienced Landscape Architect shall be submitted to the Council for approval and be approved. The landscape plan shall refer to Appendix 10 - Building Site Landscape Planting Plan examples within the Assessment of Landscape and Visual Effects prepared by Hawthorn Landscape Architects dated 20 August 2019 and integrate any future buildings within each lot with the landscape, using planting that reflects the character of the surrounding landscape and should include but not be limited to the following:

- A description of the purpose and objectives of the planting.
- A plan of the planted areas detailing proposed plant species, plant sourcing, plant sizes at time of planting, plant locations, density of planting and timing of planting, height and density upon maturity.
- A programme of establishment and post establishment protection and maintenance (e.g. planting method, fertilising, weed removal / spraying, replacement of dead or poorly performing plants, watering, length of maintenance programme). Management of the vegetation within the lot shall be the responsibility of the Lot owner.
- Details of weed management.
- Details of certification process once established

(iv) All works described in the approved site specific landscape plan (above) shall be implemented to the satisfaction of the Council or their delegated representative within the next available planting season following approval of the plan. Evidence shall be prepared by a qualified and experienced landscape architect that the planting required has been implemented to the satisfaction of Council or their delegated representative.

(v) The planting undertaken in accordance with the approved Landscape Plan and the approved site specific landscape plan for this lot created by resource consent RM190258 shall be maintained in perpetuity to the satisfaction of Council or their delegated authority. Should the vegetation be removed or die off, equivalent landscape planting is to be undertaken immediately for the purposes of softening the overall effect of the development and protecting rural character and amenity values in the area.
Note: No plants listed in Section 6 of the Northland Regional Pest and Marine Pathway Management Plan 2017- 2027 are permitted.

(vi) All planting on site shall be maintained in accordance with the approved Ecological Enhancement Plan. Evidence of compliance with this requirement shall be provided to Council in writing by a suitably qualified ecologist five years from the date of issue of titles for RM190258. Maintenance of planting will be monitored by Council for a period of five years from the date of issuing of 224 certificate for RM190258. There will be a Council charge for this monitoring payable by the lot owner.

(vii) Ongoing weed and pest control shall be undertaken in accordance with the approved Ecological Enhancement Plan in perpetuity. Evidence of compliance with this requirement shall be provided to Council in writing by a suitably qualified ecologist five years from the date of issuing of 224 certificate for RM190258.

Weed and pest plant control will be monitored by Council for a period of five years from the date of issuing of 224 certificate for RM190258. There will be a Council charge for this monitoring payable by the lot owner.

(viii) The keeping of mustelids and rodents on the lots is prohibited. Cats shall be limited to no more than two cats for each lot and they shall be required to wear a bell when outside.

No cats or dogs shall be permitted within the conservation covenanted areas and appropriate signs/symbols to this effect shall be erected and maintained at any access points to the conservation covenanted areas.

(ix) Within the lots, dogs shall not be kept on the lot unless the following conditions are complied with:

1. Any dog kept on the lot shall be secured/contained at all times to ensure that they cannot roam into the covenant area on the lot or beyond the boundaries of the lot. Containment shall be demonstrated to the satisfaction of the Council's Team Leader Monitoring and Compliance and may be in the form of an "electronic pet containment fence", secure fenced area or dog run. For the purposes of this condition, "electronic pet containment fence" means a system installed or attached to the perimeter of a defined area (or wireless equivalent) which is designed to prevent dogs escaping by transmitting a digital or electronic signal to a receiver collar worn by the dog.

2. Ongoing compliance with this condition will be monitored by Council. There will be a Council charge for this monitoring payable by the lot owner.

(x) All buildings must be located within the identified building areas shown on the Plan.

Lot	DP	Record of Title	Building Site
81	556753	973221	N
82	556753	973222	O
83	556753	973223	P
84	556753	973224	Q
91	556753	973225	R
92	556753	973226	S
93	556753	973227	T
94	556753	973228	U

(xi) No buildings shall be constructed within the identified areas to be retained as open space within the lots.

(xii) Sufficient firefighting water supply shall be provided for any single residential dwelling on the lot(s) with a minimum volume of 10,000 litres and shall remain accessible and available all year round.

Sufficient firefighting water supply shall be provided for any commercial or industrial land use on the lot(s). Sufficient firefighting water supply is deemed to mean meeting full criteria of the Code of Practice for firefighting water supplies (SNZ PAS 4509:2008 New Zealand Fire Service Firefighting Water Supplies Code of Practice.

(xiii) All buildings shall be sited and constructed, and landscaping provided in accordance with the Sanctuary Building and Landscaping Guidelines.

(xiv) The site specific landscaping plan required above shall be accompanied by evidence of compliance with the Sanctuary Building and Landscaping Guidelines and associated consultation with the Sanctuary Residents Association who administer the guidelines.

(xv) At the time of building consent suitable engineering evidence/design shall be provided to demonstrate that on site stormwater attenuation will be provided to limit peak flows from impervious areas to less than 1.2l/sec/100m^2 impervious area during a 20% Annual Event Probability (AEP) storm event and 1.2l/sec/100m^2 impervious area during a 1% AEP storm event. The evidence/design shall take into account the findings and recommendations of the Stormwater Management Staging Letter prepared by Hawthorn Geddes dated 25 June 2020 and submitted to Council with subdivision consent RM190258.

(xvi) Future lot owners are advised that no physical telecommunication connections are provided and the Kaipara District Council will not be responsible for ensuring nor providing telecommunication connections to the lots.

DATED the 16th day of February 2021

SIGNED by)
KAIPARA DISTRICT COUNCIL)
by its authorised signatory)

Dina Tetzner

KAIPARA DISTRICT

Kaipara te Oranganui • Two Oceans Two Harbours

Rural Rapid Number Application
$42.00 Fee

KAIPARA DISTRICT COUNCIL

Office Use Only
New Number Allocated: _____

Number Request
(please tick appropriate box)

☐ New Number ☐ Replacement Number

The application fee of $42.00 (refer to Fees and Charges) must accompany this form.

Location of Property

Road Name: .....

Locality:.....

Valuation Number:.....

Legal Description:.....

Area *(approx)*:.....

Other Details:.....

.....

.....

Location of Entrance

In relation to neighboring entrances, start of road, bridges, etc **and** in relation to property boundary.
(eg. near western end of boundary approx. 300m from number 716)

.....

.....

.....

Enquirers Details

Name: .....

Address:.....

..... Phone Number: .....

Received by: ..... Date: .....

Receipt No. .....

Please return Completed Form to

Kaipara District Council
Roading Team
Private Bag 1001
Dargaville 0340

Attention: Customer Services

KAIPARA DISTRICT

Kaipara te Oranganui • Two Oceans Two Harbours

Vehicle Crossing Permit Application

KAIPARA DISTRICT COUNCIL

Application No .....

Resource Consent No .....
(only required if current RC exists of which a VC permit is a part of)

Applicants Details

Owner's Name .....

Postal Address .....

Contact Telephone No .....Email .....

Agent Name .....

Postal Address .....

Contact Telephone No .....Email .....

Send permit to: ☐ Owner ☐ Agent

Site Location

Street/Rapid No ..... Road Name .....

Town or Locality .....

Legal Description ..... Valuation No .....

Contractor/Traffic Management Plan Details

Please Note: ***Application will not be accepted by Council if a Plan is not attached for the location of your vehicle access. If constructing a vehicle crossing, your application will be rejected if a Traffic Management Plan is not attached.***

Name of person/firm constructing the crossing .....

Person in Charge of Traffic Management .....

Postal Address .....

Contact Telephone No .....Email .....

Crossing Information Required

Location:

Adjacent Road is: .....

☐ Urban (S05) ☐ Rural (S06)

☐ Sealed with kerb and channel ☐ Sealed with no kerb and channel ☐ Metalled

Intended Use

☐ Residential ☐ Commercial ☐ Other *(please specify)*.....

KAIPARA DISTRICT
Kaipara te Oranganui • Two Oceans Two Harbours

Vehicle Crossing Permit Application

KAIPARA DISTRICT COUNCIL

SITE LOCALITY PLAN

Map Showing Location of Vehicle Crossing	**Please show the following:** • Roads • Property boundaries • Location of entranceway – including **distances** from boundaries and adjacent numbered property entrances • Other identifiable land marks, buildings etc.
Property Description:	
Road Name:	

The Application Fee must be paid before permit the can be processed.
If the applicant has a current resource consent of which the Vehicle Crossing is a part of the fee to be charged is $345.00, an additional inspection fee will be charged as part of the consent application. For all other applications the fee is $485.00 which includes the pre and post approval inspections.

NB: A further $150.00 will be charged if an additional inspection is required.

Signed by Owner/Agent: …… Date: ..... ……

Office Use Only

Receipt No: ..... Date: .....

RCA consent (eg CAR/WAP) and/or RCA contract reference	

TRAFFIC MANAGEMENT PLAN (TMP) – SHORT FORM

*Complete **short form** if simple activity and RCA permits. Refer to the NZ Transport Agency's Traffic control devices manual, part 8 Code of practice for temporary traffic management (CoPTTM), section E, appendix A for a guide on how to complete each field.*

Organisations/ TMP reference	TMP reference:	Contractor:	Principal ***(Client)*:**			
			RCA:			
Location details and road characteristics	Road names and suburb		House no. / RPs ***(From and to)***	Road level	Permanent speed	AADT/Peak flows
Description of work activity						

Planned work programme							
Start date		Time		End date		Time	
Consider significant stages, **for example:** • **road closures** • **detours** • **no activity periods.**							
Alternative dates if activity delayed							

Road aspects affected ***(delete either Yes or No to show which aspects are affected)***							
Pedestrians affected?	**Yes**	**No**	Property access affected?	**Yes**	**No**	Traffic lanes affected?	**Yes** **No**
Cyclists affected?	**Yes**	**No**	Restricted parking affected?	**Yes**	**No**	Delays or queuing likely?	**Yes** **No**

TSL/ Diagram ***(see TSL decision matrix for guidance)***	TSL details as required **Approval of Temporary Speed Limits (TSL) are in terms of Section 5 of Land Transport Rule: Setting of Speed Limits 2003,Rule 54001** ***(List speed, length and location)***	Times ***(From and to)***	Dates ***(Start and finish)***	Diagram ref. no's ***(Layout drawings or TMDs)***
Attended day/ night	**A temporary maximum speed limit of km/h is hereby fixed for motor vehicles travelling over the length of m situated between (House no./RP) and (House no./RP) on (street or road name)**			
Unattended day/ night	**A temporary maximum speed limit of km/h is hereby fixed for motor vehicles travelling over the length of m situated between (House no./RP) and (House no./RP) on (street or road name)**			

RCA consent (eg CAR/WAP) and/or RCA contract reference	

Contingency plan		
If long queues form or delays exceed 5mins *(or any other period required by RCA)*, site to be disestablished or additional lanes made available.	**Adjust TMD to suit unforeseen circumstances *(eg weather or site overlaps with another work site)*.**	**Emergency services will be accommodated and access provided through the site as required.**
Add additional contingencies:		

Contact details	Name	24/7 contact number	CoPTTM ID	Qualification	Expiry date
Principal					
TMC					
Engineers' representative					
Contractor					
STMS					
TC					
Others as required					

TMP preparation (or approval if STMS delegated authority to approve TMPs)

Delete the option that does not apply (either prepared or approved)

Prepared / Approved						
	Name	**Date**	***Signature***	***ID no.***	***Qualification***	***Expiry date***

This TMP meets CoPTTM requirements	Number of diagrams attached					
TMP returned for correction						
	Name	**Date**	***Signature***	***ID no.***	***Qualification***	***Expiry date***

Engineer/TMC to complete following section when approval or acceptance required

Approved by TMC or engineer ***(delete one)***						
	Name	**Date**	***Signature***	***ID no.***	***Qualification***	***Expiry date***
Acceptance by TMC ***(if required)***						
	Name	**Date**	***Signature***	***ID no.***	***Qualification***	***Expiry date***

Qualifier for engineer or TMC approval

RCA consent (eg CAR/WAP) and/or RCA contract reference	

Approval of this TMP authorises the use of any regulatory signs included in the TMP or attached traffic management diagrams.

This TMP is approved on the following basis:

1. To the best of the approving engineer's/TMC's judgment this TMP conforms to the requirements of CoPTTM.

2. This plan is approved on the basis that the activity, the location and the road environment have been correctly represented by the applicant. Any inaccuracy in the portrayal of this information is the responsibility of the applicant.

3. The STMS for the activity is reminded that it is the STMS's duty to postpone, cancel or modify operations due to the adverse traffic, weather or other conditions that affect the safety of this site.

KDC - Approved Building Consent Document - BC210441 - Pg 1 of 27 - 30/08/2021 - ComplyNZ

Kaipara te Oranganui

KAIPARA DISTRICT

Two Oceans Two Harbours

Approved Building Consent Documents

Please note: A copy of the stamped, approved documents must be available onsite for **all** inspections.

Date Submitted: Monday, 28 June 2021

Form 2
Application for project information memorandum and/or building consent
Section 33 or section 45, Building Act 2004

KDC - Approved Building Consent Document - BC210441 - Pg 2 of 27 - 30/08/2021 - ComplyNZ

The building

Street address of building:	Robert Hastie Drive Mangawhai New Zealand mangawhai
Legal description of land where building is located:	Lot 81 Deposited Plan 556753
Building name:	Main Building
Location of building within site/block number:	Robert Hastie Drive Mangawhai New Zealand mangawhai
Number of levels:	No information provided
Level/unit number:	No information provided
Area:	Total: 277.00 m2, Change: 277.00 m2
Current, lawfully established, use:	2.0 Housing: 2.0.2 Detached Dwelling has 4 occupants
Year first constructed:	2021

The owner

Name of owner:	Acdl Trustee Limited
Contact person:	Lance Kendall
Mailing address:	17 Pinefield Road Whenuapai Auckland 0618
Street address/registered office:	No information provided
Phone number:	Landline: 02102210567 Mobile: N/A
Daytime:	Landline: 02102210567 Mobile: N/A
After hours:	Landline: 02102210567 Mobile: N/A
Facsimile number:	No information provided
Email address:	lisa@c3bc.co.nz
Website:	No information provided

The following evidence of ownership is attached to this application:

1. 973221_Title_Search_Copy.pdf (282.71K)
2. CN_and_Covenant._12012486_1.pdf (203.36K)
3. CN_and_Covenant._12012486_3.pdf (368.98K)

4. CN_and_Covenant._8509265_4.pdf (488.98K)

Agent

Name of agent:	Lisa Fletcher			
Mailing address:	14 Fallow Street Queenstown New Zealand Wakatipu Queenstown 9300			
Street address/registered office:	14 Fallow Street Queenstown New Zealand Wakatipu Queenstown			
Phone number:	Landline:	02102210567	Mobile:	02102210567
Daytime:	Landline:	02102210567	Mobile:	02102210567
After hours:	Landline:	02102210567	Mobile:	02102210567
Facsimile number:	No information provided			
Email address:	lisa@c3bc.co.nz			
Website:	No information provided			
Relationship to owner:	Application made on owners behalf			

First point of contact for communications with the council/building consent authority:

Full name:	Lisa Fletcher
Mailing address:	14 Fallow Street, Queenstown, New Zealand Wakatipu Otago Queenstown 9300
Phone number(s):	02102210567
Facsimile number(s):	N/A
Email address(es):	lisa@c3bc.co.nz

KDC - Approved Building Consent Document - BC210441 - Pg 3 of 27 - 30/08/2021 - ComplyNZ

Application

I request that you issue a project information memorandum and building consent for the building work described in this application.

Signature of agent on behalf of and with the authority of the owner:

LISA FLETCHER

Date: 28 Jun 2021

space for council use

Application Type	Building Consent including PIM
Reference Key:	44408311CW
Name:	lisa fletcher
Application Role:	Agent

The project

Description of the building work:

Erect a Single Storey, Four Bedroom Residential Dwelling with attached double garage

Will the building work result in a change of use of the building?	No
Intended life of the building if less than 50 years:	50 years
List building consents previously issued for this project (if any):	No information provided
Estimated value of the building work on which the building levy will be calculated (including goods and services tax):	$820,000

Restricted building work

Will the building work include any restricted building work? Yes

If Yes, provide the following details of all licensed building practitioners who will be involved in carrying out or supervising the restricted building work:

Name	Marc Vale
Licensing class	Design
Licensed building practitioner number (or registration number if treated as being licensed under section 291 of Act)	BP134199

KDC - Approved Building Consent Document - BC210441 - Pg 4 of 27 - 30/08/2021 - ComplyNZ

Project information memorandum

The following matters are involved in the project:

- ☑ Subdivision
- ☑ Alterations to land contours
- ☑ Disposal of stormwater and wastewater

Building consent

The following plans and specifications are attached to this application:

1. Kendall_-_Lot_81_The_Sanctuary_-_Building_Consent.pdf (6.73M)
2. Kendall_-_Specification.pdf (1.01M)
3. Kendall_-_Manufacturer_Docs.pdf (41.42M)

The building work will comply with the building code as follows:

Main Building

B1 - Structure	AS1, VM1
B2 - Durability	AS1
C1 - C6 - Protection from Fire (current)	AS1
D1 - Access Routes	AS1
E1 - Surface Water	AS1, VM1
E2 - External Moisture	AS1
E3 - Internal Moisture	AS1
F2 - Hazardous Building Materials	AS1
F4 - Safety from Falling	AS1
F7 - Warning Systems	AS1
G1 - Personal Hygiene	AS1
G2 - Laundering	AS1
G3 - Food Preparation	AS1
G4 - Ventilation	AS1
G7 - Natural Light	AS1
G8 - Artificial Light	AS1
G9 - Electricity	AS1
G10 - Piped Services	AS1
G12 - Water Supplies	AS1
G13 - Foul Water	AS1
H1 - Energy Efficiency	AS1
Waiver / Modification Required:	N/A

KDC - Approved Building Consent Document - BC210441 - Pg 5 of 27 - 30/08/2021 - ComplyNZ

Compliance schedule

There are no specified systems in the building.

KDC - Approved Building Consent Document - BC210441 - Pg 6 of 27 - 30/08/2021 - ComplyNZ

Attachments

The following documents are attached to this application:

Plans and specifications

1. Kendall_-_Lot_81_The_Sanctuary_-_Building_Consent.pdf (6.73M)
2. Kendall_-_Specification.pdf (1.01M)
3. Kendall_-_Manufacturer_Docs.pdf (41.42M)

Record of title

1. 973221_Title_Search_Copy.pdf (282.71K)
2. CN_and_Covenant._12012486_1.pdf (203.36K)
3. CN_and_Covenant._12012486_3.pdf (368.98K)
4. CN_and_Covenant._8509265_4.pdf (488.98K)

Restricted building work memorandums / Owner-builder declaration

1. Certificate_of_Design_Works.pdf (359.06K)
2. Client_Authority_Form.pdf (237.86K)

Supporting documents

1. Kendall_-_designIT_Calculation.pdf (464.13K)
2. Kendall_-_H1_Calcs.pdf (103.39K)
3. Kendall_-_Geotech.pdf (1.10M)
4. Kendall_BTL.pdf (1.07M)
5. Kendall_-_On-site_wastewater.pdf (7.26M)
6. Example_Plan_with_soak_pit_page_2.pdf (33.59K)
7. Coping_Detail.pdf (287.61K)
8. Example_Plan_with_soak_pit.pdf (46.55K)
9. President.pdf (380.66K)
10. Fibreglass_Pool_Calculations.pdf (1.75M)
11. Soak_Pit_Detail.pdf (28.94K)
12. Specification-Residential-Pool-Fencing.pdf (19.38K)
13. Magnalatch_Install_Instructions.pdf (2.66M)
14. Truclose_Hinge_Installation.pdf (2.36M)

Building Consent Application: 44408311CW

Date Submitted: Monday, 28 June 2021

KDC - Approved Building Consent Document - BC210441 - Pg 7 of 27 - 30/08/2021 - ComplyNZ

FORM PLG 1

National Environmental Standard (NES) for Assessing and Managing Contaminants in Soil to Protect Human Health

For assistance in answering these questions please refer to (PLG 1A)

Please note that any inaccuracies may result in the applicant being in breach of the Resource Management Act 1991 and/or exposed to liability if the site is subsequently found to be contaminated, including being liable for remedial works.

Is the building work and all associated activities:

Changing the use of the land? **YES**

(Please note that "changing the use of the land" includes erecting a dwelling on an area of land which previously had no dwelling erected upon it.)

Disturbing soil? **NO**

(more than 25m3 per 500m2 of land) or removing soil? (more than 5m3 per 500m2 of land) (e.g.: foundations, on-site effluent treatment and disposal systems, wells or bores)

Is the land currently being used, has been used in the past, or is likely to have been used for an activity described on the HAIL?

NO

For more information on this process please contact the Duty Planner on 09 439 3123 or go the Ministry for the Environment website: http://www.mfe.govt.nz/laws/standards/contaminants-in-soil/

KAIPARA DISTRICT
Kaipara te Oranganui • Two Oceans Two Harbours

KDC - Approved Building Consent Document - BC210441 - Pg 8 of 27 - 30/08/2021 - ComplyNZ

Signature

The name below as AGENT has the authority for the application to proceed to processing and accept the associated charges.

Signed By:

Lisa Fletcher

28 Jun 2021

The Agent will be the first point of contact for communications with the Council/Building Consent authority regarding this application / building work and will receive all correspondence including all invoices.

RECORD OF TITLE
UNDER LAND TRANSFER ACT 2017
FREEHOLD

Search Copy

R.W. Muir
Registrar-General
of Land

KDC - Approved Building Consent Document - BC210441 - Pg 9 of 27 - 30/08/2021 - ComplyNZ

Identifier **973221**

Land Registration District **North Auckland**

Date Issued 23 February 2021

Prior References
731590

Estate Fee Simple
Area 5903 square metres more or less
Legal Description Lot 81 Deposited Plan 556753
Registered Owners
ACDL Trustee Limited

Estate Fee Simple - 1/826 share
Area 96.8877 hectares more or less
Legal Description Lot 100-103, 106, 200, 202 Deposited Plan 404128 and Lot 1 Deposited Plan 430128 and Lot 1 Deposited Plan 482523
Registered Owners
ACDL Trustee Limited

Interests

Subject to a water supply right over part Lot 100 DP 404128 marked B on DP 404128 specified in Easement Certificate 974832.2 - 19.5.1981 at 11.52 am

Appurtenant to the parts Lot 1 DP 482523 and Lot 202 DP 404128 formerly contained in NA133C/596 are rights of way specified in Easement Certificate C414433.4 - 17.9.1992 at 1:36 pm

Appurtenant to the parts Lot 1 DP 482523 and Lot 202 DP 404128 formerly contained in NA133C/596 are rights of way specified in Easement Certificate D549922.4 - 17.10.2000 at 10.22 am

The easements specified in Easement Certificate D549922.4 are subject to Section 351E (1) (a) Municipal Corporations Act 1954

Subject to a right to drain sewage over part Lot 1 DP 430128 marked BJ on DP 430128 created by Easement Instrument 8138731.3 - 20.10.2009 at 9:12 am

Appurtenant to Lot 100 DP 404128 herein is a right of way and appurtenant to Lot 1 DP 430128 herein is a right to convey stormwater created by Easement Instrument 8138731.3 - 20.10.2009 at 9:12 am

The easements created by Easement Instrument 8138731.3 are subject to Section 243 (a) Resource Management Act 1991

Subject to a right (in gross) to convey telecommunications and computer media over part Lot 200 DP 404128 marked BN and over part Lot 202 DP 404128 marked BP all on DP 404128 in favour of Telecom New Zealand Limited created by Easement Instrument 8138731.4 - 20.10.2009 at 9:12 am

The easements created by Easement Instrument 8138731.4 are subject to Section 243 (a) Resource Management Act 1991

Identifier **973221**

Subject to a right (in gross) to convey electricity over part Lot 200 DP 404128 marked BN and over part Lot 202 DP 404128 marked BP all on DP 404128 in favour of Northpower Limited created by Easement Instrument 8138731.6 - 20.10.2009 at 9:12 am

The easements created by Easement Instrument 8138731.6 are subject to Section 243 (a) Resource Management Act 1991

8138731.7 Conservation Covenant pursuant to Section 77 Reserves Act 1977 - 20.10.2009 at 9:12 am

8138731.8 Conservation Covenant pursuant to Section 77 Reserves Act 1977 - 20.10.2009 at 9:12 am

8509265.4 Consent Notice pursuant to Section 221 Resource Management Act 1991 - 6.7.2010 at 3:48 pm (affects Lots 100, 101 &103 DP 404128 and Lots 1 DP 430128 and Lot 81 DP 556753)

Land Covenant in Easement Instrument 8581297.2 - 17.2.2011 at 10:51 am

8581297.3 Encumbrance to The Sanctuary Residents Association Incorporated – 17.2.2011 at 10:51 am (Affects part Lot 1 DP 482523 formerly comprised in CT's 524301, 524302, 524303, 524306, 524308, 524309, 524312, 524315, 524316, 524318, 524328, 524335, 524342, 524343, 524346, 524349, 524351, 524298)

8581297.4 Encumbrance to The Sanctuary Residents Association Incorporated – 17.2.2011 at 10:51 am (Affects Lot 81 DP 556753, Lot 1 DP 430128 and Lot 100-103, 106, 200, 202 DP 404128 and part Lot 1 DP 482523 formerly comprised in CT's 517272, 524294, 524295, 524296, 524297, 524299, 524300, 524304, 524305, 524307, 524310, 524311, 524313, 524314, 524317, 524319, 524320, 524321, 524322, 524323, 524324, 524325, 524326, 524327, 524329, 524330, 524331, 524332, 524333, 524334, 524336, 524337, 524338, 524339, 524340, 524341, 524344, 524345, 524347, 524348, 524350)

Land Covenant in Easement Instrument 9542293.3 - 7.2.2014 at 12:23 pm (affects Lot 1 DP 482523)

12012486.1 Variation of Consent Notice 8509265.4 pursuant to Section 221(5) Resource Management Act 1991 - 23.2.2021 at 12:23 pm

Subject to Section 241(2) Resource Management Act 1991 (affects DP 556753)

12012486.3 Consent Notice pursuant to Section 221 Resource Management Act 1991 - 23.2.2021 at 12:23 pm(Affects Lot 81 DP 556753)

12012486.5 Conservation Covenant pursuant to Section 77 Reserves Act 1977 - 23.2.2021 at 12:23 pm (Affects Lot 81 DP 556753)

Land Covenant (in gross) in favour of The Santuary Residents Association Incorporated created by Covenant Instrument 12028708.1 - 26.3.2021 at 2:55 pm (Affects Lot 81 DP 556753)

KDC - Approved Building Consent Document - BC210441 - Pg 10 of 27 - 30/08/2021 - ComplyNZ

Identifier **973221**

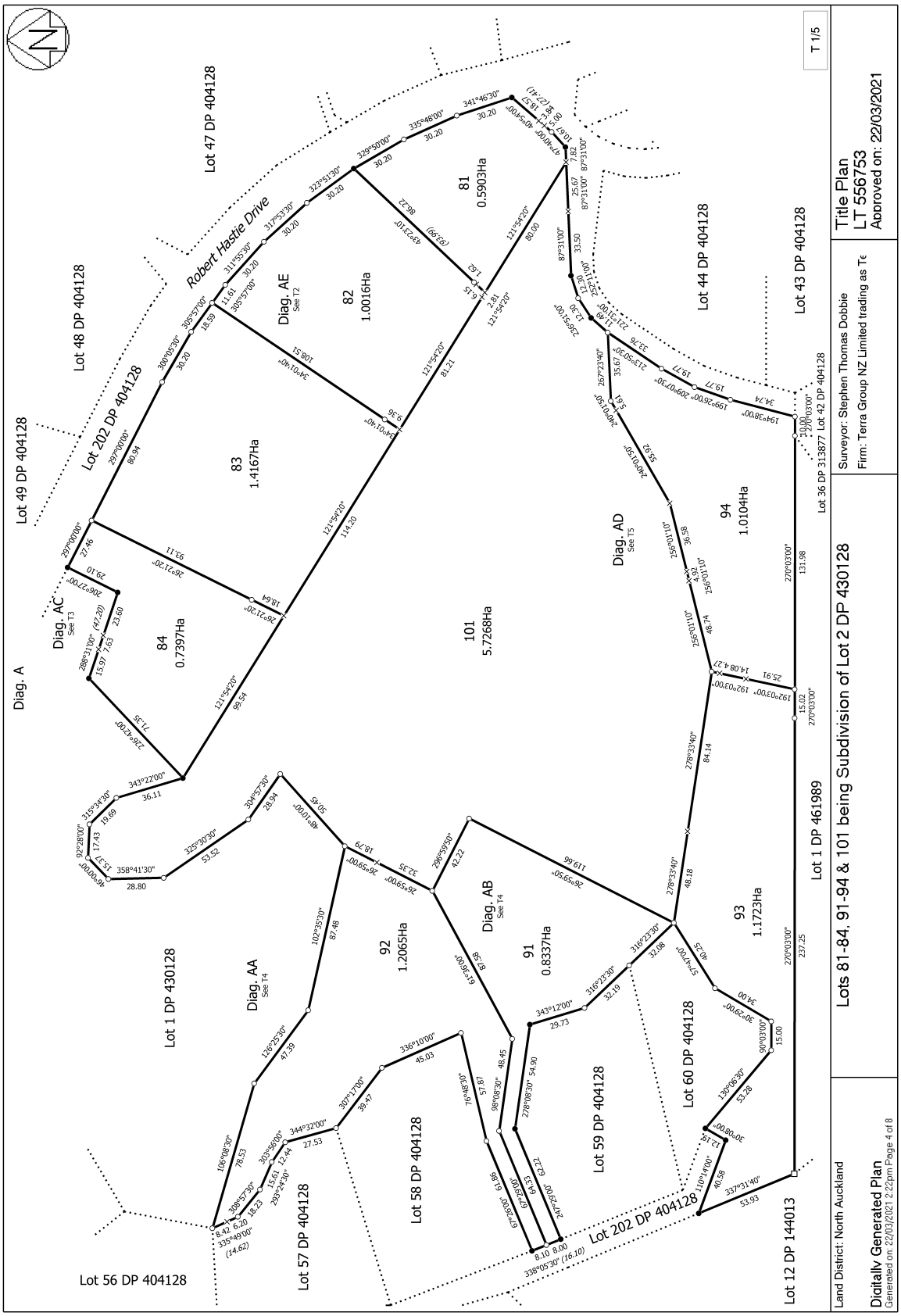

KDC - Approved Building Consent Document - BC210441 - Pg 11 of 27 - 30/08/2021 - ComplyNZ

View Instrument Details

Instrument No	12012486.1
Status	Registered
Date & Time Lodged	23 February 2021 12:23
Lodged By	Cameron, Nichole Julienne
Instrument Type	Variation of Consent Notice Condition under s221(5) Resource Management Act 1991

Affected Records of Title	**Land District**
781590	North Auckland

Affected Instrument Consent Notice under s221(4)(a) Resource Management Act 1991 8509265.4

Annexure Schedule Contains 1 Pages.

Signature

Signed by Christopher Calder Hamilton Allan as Territorial Authority Representative on 22/02/2021 11:56 AM

***** End of Report *****

KDC - Approved Building Consent Document - BC210441 - Pg 12 of 27 - 30/08/2021 - ComplyNZ

KDC - Approved Building Consent Document - BC210441 - Pg 13 of 27 - 30/08/2021 - ComplyNZ

VARIATION OF CONSENT NOTICE
PURSUANT TO SECTION 221 (3)
RESOURCE MANAGEMENT ACT 1991

IN THE MATTER of Record of Title No 781590 (North Auckland Land Registration District)

AND

IN THE MATTER of a Consent Notice 8509265.4 (North Auckland Land Registration District)

Pursuant to Section 221(3) of the Resource Management Act 1991 the **KAIPARA DISTRICT COUNCIL** ("the Council") being satisfied that the conditions of subdivision imposed in respect of Lot 2 on Deposited Plan 430128 and 1/59 share Lot 100-103, 106, 200, 202 Deposited Plan 404128 and Lot 1 Deposited Plan 430128 and Lot 1 Deposited Plan 482523 where such conditions of consent were to be complied with on a continuing basis and were secured by way of a consent notice may now be varied by deleting from clause 16 of Consent Notice 8509265.4 referred to Lot 2 on Deposited Plan 430128 and 1/59 share Lot 100-103, 106, 200, 202 Deposited Plan 404128 and Lot 1 Deposited Plan 430128 and Lot 1 Deposited Plan 482523 to the intent that:

Reference to Lot 2 DP 430128 of the Subdivision in clause 16 of Consent Notice 8509265.4 shall be cancelled.

It is hereby agreed between the registered proprietor of the land contained in Record of Title No 781590 and the Council that Consent Notice No. 8509265.4 (North Auckland Lands Registration District) ("the Consent Notice") can be varied and the parties request the District Land Registrar to make an entry in the register and on any relevant instrument of title noting that the Consent Notice has been varied.

In all other respects Consent Notice 8509265.4 remains unaltered

DATED this 4th day of February 2021

SIGNED by
KAIPARA DISTRICT COUNCIL
by its authorised signatory

Dina Tetzner

View Instrument Details

Instrument No	8509265.4
Status	Registered
Date & Time Lodged	06 July 2010 15:48
Lodged By	Shepherd, Andrea Jane
Instrument Type	Consent Notice under s221(4)(a) Resource Management Act 1991

Affected Computer Registers	Land District
414229	North Auckland
414230	North Auckland
414231	North Auckland
414232	North Auckland
414233	North Auckland
414234	North Auckland
414235	North Auckland
414236	North Auckland
414237	North Auckland
414238	North Auckland
414239	North Auckland
414240	North Auckland
414241	North Auckland
414242	North Auckland
414243	North Auckland
414244	North Auckland
414245	North Auckland
414246	North Auckland
414247	North Auckland
414248	North Auckland
414249	North Auckland
414250	North Auckland
414251	North Auckland
414252	North Auckland
414253	North Auckland
414254	North Auckland
414255	North Auckland
414256	North Auckland
414257	North Auckland
414258	North Auckland
414259	North Auckland
414260	North Auckland
414261	North Auckland
414262	North Auckland
414263	North Auckland
414264	North Auckland
414265	North Auckland
414266	North Auckland
414267	North Auckland
414268	North Auckland
414269	North Auckland

KDC - Approved Building Consent Document - BC210441 - Pg 14 of 27 - 30/08/2021 - ComplyNZ

© Copyright: Land Information New Zealand

Affected Computer Registers	Land District
414270	North Auckland
414271	North Auckland
414272	North Auckland
414273	North Auckland
414274	North Auckland
414275	North Auckland
414276	North Auckland
414277	North Auckland
414278	North Auckland
414279	North Auckland
414280	North Auckland
414281	North Auckland
414282	North Auckland
414283	North Auckland
414284	North Auckland
414285	North Auckland
414286	North Auckland
414287	North Auckland

Annexure Schedule: Contains 7 Pages.

Signature

Signed by Nicholas William Dovell Francis as Territorial Authority Representative on 06/07/2010 03:39 PM

***** End of Report *****

KDC - Approved Building Consent Document - BC210441 - Pg 15 of 27 - 30/08/2021 - ComplyNZ

KDC - Approved Building Consent Document - BC210441 - Pg 16 of 27 - 30/08/2021 - ComplyNZ

KAIPARA DISTRICT COUNCIL

CONSENT NOTICE
PURSUANT TO SECTION 221 OF THE RESOURCE MANAGEMENT ACT 1991

In the matter of a Consent Notice issued pursuant to Section 221 of the Resource Management Act 1991 (*Act*) in respect of Resource Consents RM090281 and RM090281A (*Resource Consent*) for the subdivision (*Subdivision*) on survey plan DP 404128 showing Lots 1, 4-6, 8-10, 12, 13, 15-17, 19-27, 27a, 28, 28a, 29-33, 35, 35a, 36-60, 69, 70, 100-106, 200 and 202 (all inclusive) and on survey plan DP 430128 showing Lots 1 and 2 DP 430128.

I, Alan John McKerchar, the Principal Administrative Officer of the Kaipara District Council (*Council*), hereby certify that pursuant to the consents under RM090281 dated 18 April 2006 and RM090281A dated 18 November 2009, the following shall apply as conditions of such consents to be complied with on a continuing basis by the Owner as defined in the Act:

In relation to Lots 1, 4-6 (inclusive), 8, 9, 12, 13, 27A, 28, 28A, 29-33 (inclusive), 35, 35A, 36-38 (inclusive) on DP 404128 of the Subdivision

1 The Owner of each lot is required to be a shareholder or member of The Sanctuary Residents Association Incorporated formed to operate, maintain and administer those components of the communal wastewater treatment and disposal system for the Subdivision located on commonly owned land and administer monitoring of individual treatment systems connected to the communal system.

2 The Owner of each lot is required to enter into an ongoing contract for the maintenance of the individual treatment systems with an organisation approved by The Sanctuary Residents Association Incorporated .

3 In the event that The Sanctuary Residents Association Incorporated is wound up or liquidated, or ceases or fails to carry out its prescribed purposes, the Owners are deemed to be an unincorporated society for the purposes set out in paragraphs 1 and 2 of this Consent Notice.

In relation to Lots 10, 17, 19-23 (inclusive), 27, 39-60 (inclusive), 69 and 70 on DP 404128 and Lot 2 on DP 430128 of the Subdivision

4 The Owner acknowledges that the construction and use of on site wastewater disposal systems for each lot may require discharge permits from the Northland Regional Council and that advice on specific resource

KDC - Approved Building Consent Document - BC210441 - Pg 17 of 27 - 30/08/2021 - ComplyNZ

consent requirements (if any) should be sought from the Northland Regional Council accordingly.

5 The Owner shall ensure that the wastewater treatment and disposal systems on each lot shall be designed by and installed under the supervision of a competent engineer with appropriate experience in wastewater systems or other suitable qualified person to the approval of the Council; and.

6 The Owners of each lot shall enter into an ongoing contract for the maintenance of the wastewater treatment and disposal systems on each lot and provide details to the entity formed to administer all matters associated with the maintenance of all on-site effluent disposal systems.

In relation to lots 1, 4-6 (inclusive), 8-10 (inclusive), 12, 13, 15-17 (inclusive), 19-27 (inclusive), 27a, 28, 28a, 29-33 (inclusive), 35, 35a, 36-60 (inclusive), 69 and 70 on DP 404128 and Lot 2 on DP 430128 of the Subdivision

7 The Owner shall have regard to the Engineering and Geotechnical Report (Job No. 4819) prepared by Hawthorne Geddes Engineers & Architects Ltd dated September 2004 (*the Hawthorne Geddes Report*).

8 The Owner of each Lot shall ensure that it complies with the recommendations of that report with respect to foundations and drainage at the time of development of the Lot.

9 The Owner of each Lot shall not erect or permit the erection of any building otherwise than within the identified building sites and additional building sites referred to in the Hawthorne Geddes Report, such sites being identified in respect of each lot on the table annexed to this consent notice as Schedule One.

10 The Owner shall comply with the building and landscaping guidelines for the Subdivision which have been approved by Council and shall ensure that any buildings on the lot be sited and constructed and the lots landscaped in accordance with those building and landscaping guidelines.

11 The Owner shall maintain any landscaping on the lot in accordance with the Landscape Amenity Enhancement Plan approved under Condition 2(bb) of Resource Consent. The areas of the landscaping on the lots to which this condition 9 apply are as set out in the table annexed to this consent notice as Schedule Two.

12 The Owner acknowledges that condition 10 above will be monitored by the Council for a period of five years from the date of completion of planting to

KDC - Approved Building Consent Document - BC210441 - Pg 18 of 27 - 30/08/2021 - ComplyNZ

the reasonably satisfaction of Council, and that there will be a Council charge for this monitoring payable by the Owner.

13 The Owner shall not allow the planting of exotic vegetation that could pose a threat to the ecological values of the lots. This includes the introduction of invasive plant species, including those currently listed on the nationally banned for sale list (see N.R.C Regional Pest Management Strategy).

14 The Owner of each Lot acknowledges that it is required to be a member of The Sanctuary Residents Association Incorporated for so long as it is the owner of a Lot. The Owner of each Lot acknowledges that it shall not take steps to wind up or liquidate The Sanctuary Residents Association Incorporated without the Council's prior written consent.

In relation to lots 52 and 70 on DP 404128 of the Subdivision

15 The Owner acknowledges the presence of recorded archaeological sites in the Time Depth Heritage Consultants Archaeological Assessment Report and the protection given to these sites under the Historic Places Act 1993.

In relation to lots 1, 4-6 (inclusive), 8-10 (inclusive), 12, 13, 15-17 (inclusive), 19-27 (inclusive), 27a, 28, 28a, 29-33 (inclusive), 35, 35a, 36-60 (inclusive), 69 and 70 on DP 404128 and Lot 2 on DP 430128 of the Subdivision

16 The Owner of each Lot acknowledges that no further subdivision of the lot shall be permitted for a period of 10 years from the date of registration of this consent notice.

In relation to lots 1, 10, 13 and 15-17 (inclusive) on DP 404128 of the Subdivision

17 The Owner of each Lot must not use and must not permit the use of direct vehicular access from the Lot onto Cove Road.

In relation to Lots 100 and 101 on DP 404128 of the Subdivision

18 The Owner must take all practicable steps to protect and enhance the amenity, ecological and water quality values of the lakes on the Lots and must not use or permit the use of motorised craft on the lakes except by the Owner for dam maintenance or emergency purposes.

In relation to Lot 103 on DP 404128 of the Subdivision

19 The Owner must not use and must not permit the use of the Lot for any purpose other than recreation and recreation facilities and must not use or

permit the use of the Lot for residential development or commercial accommodation.

In relation to Lot 1 DP 430128 of the Subdivision

20 The Owner must not use or permit the use of the Lot for any purpose other than maintaining and enhancing its agricultural use and for effluent disposal and must not use or permit the use of the Lot for residential development or commercial accommodation.

Dated this day 16th of June 2010

AUTHENTICATED by the Chief Executive
of the Council, Alan John McKerchar

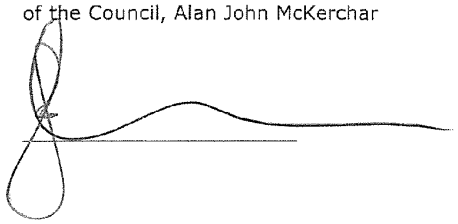

KDC - Approved Building Consent Document - BC210441 - Pg 19 of 27 - 30/08/2021 - ComplyNZ

KDC - Approved Building Consent Document - BC210441 - Pg 20 of 27 - 30/08/2021 - ComplyNZ

SCHEDULE ONE

Building sites and additional building sites

Lot	Building sites as shown on DP 404128	Additional building sites shown on DP 404128
Lot 1 on DP 404128	ZZ	
Lot 4 on DP 404128	ZY	
Lot 5 on DP 404128	ZX	
Lot 6 on DP 404128	ZW	
Lot 8 on DP 404128	ZV	
Lot 9 on DP 404128	ZU	
Lot 10 on DP 404128	ZT	
Lot 12 on DP 404128	ZS	
Lot 13 on DP 404128	ZQ	
Lot 15 on DP 404128	ZP	
Lot 16 on DP 404128	ZO	
Lot 17 on DP 404128	ZN	XP
Lot 19 on DP 404128	ZL	XE and XF
Lot 20 on DP 404128	ZM	XO
Lot 21 on DP 404128	ZK	
Lot 22 on DP 404128	ZJ	
Lot 23 on DP 404128	ZI	
Lot 24 on DP 404128	ZH	
Lot 25 on DP 404128	ZG	
Lot 26 on DP 404128	ZF	
Lot 27 on DP 404128	XR	
Lot 27a on DP 404128	ZD and ZE	
Lot 28 on DP 404128	ZC	
Lot 28a on DP 404128	ZB	
Lot 29 on DP 404128	ZA	
Lot 30 on DP 404128	YZ	
Lot 31 on DP 404128	YY	
Lot 32 on DP 404128	YX	
Lot 33 on DP 404128	YW	
Lot 35 on DP 404128	YV	
Lot 35a on DP 404128	YU	XN
Lot 36 on DP 404128	YT	XM
Lot 37 on DP 404128	YS	XL
Lot 38 on DP 404128	YR	XG and XK
Lot 39 on DP 404128	YQ	
Lot 40 on DP 404128	YP	XJ
Lot 41 on DP 404128	YO	XI
Lot 42 on DP 404128	YN	XH
Lot 43 on DP 404128	YM	
Lot 44 on DP 404128	YL	XD
Lot 45 on DP 404128	YJ	
Lot 46 on DP 404128	YI	
Lot 47 on DP 404128	YH	
Lot 48 on DP 404128	YG	

Annexure Schedule: Page:6 of 7

Lot	Building sites as shown on DP 404128	Additional building sites shown on DP 404128
Lot 49 on DP 404128	YF	
Lot 50 on DP 404128	YE	
Lot 51 on DP 404128	YD	
Lot 52 on DP 404128	YC	
Lot 53 on DP 404128	YB	
Lot 54 on DP 404128	YA	
Lot 55 on DP 404128	XZ	
Lot 56 on DP 404128	XY	
Lot 57 on DP 404128	XX	
Lot 58 on DP 404128	XW	
Lot 59 on DP 404128	XV	
Lot 60 on DP 404128	XU	
Lot 69 on DP 404128	XT	
Lot 70 on DP 404128	XQ and XS	
Lot 2 on DP 404128	YK	ZR

KDC - Approved Building Consent Document - BC210441 - Pg 21 of 27 - 30/08/2021 - ComplyNZ

KDC - Approved Building Consent Document - BC210441 - Pg 22 of 27 - 30/08/2021 - ComplyNZ

SCHEDULE TWO

Landscape enhancement areas

Lot	Landscape enhancement areas as shown on DP 404128
Lot 1 on DP 404128	C, D, P, CA, CE and CH
Lot 4 on DP 404128	E and CC
Lot 5 on DP 404128	F and CJ
Lot 6 on DP 404128	G
Lot 8 on DP 404128	H
Lot 9 on DP 404128	I
Lot 10 on DP 404128	J
Lot 12 on DP 404128	K
Lot 13 on DP 404128	L, N and O
Lot 17 on DP 404128	CT
Lot 19 on DP 404128	Y, Z, AG and AO
Lot 24 on DP 404128	CW
Lot 25 on DP 404128	AH
Lot 27 on DP 404128	AK
Lot 27a on DP 404128	AM
Lot 29 on DP 404128	AP
Lot 30 on DP 404128	AQ
Lot 31 on DP 404128	AR
Lot 32 on DP 404128	AS
Lot 33 on DP 404128	S and CU
Lot 35a on DP 404128	AU
Lot 36 on DP 404128	AV
Lot 37 on DP 404128	AW
Lot 38 on DP 404128	AX
Lot 102 on DP 404128	BQ
Lot 103 on DP 404128	BD
Lot 106 on DP 404128	BO
Lot 1 on DP 430128	BR
Lot 2 on DP 430128	BK and BL

View Instrument Details

Instrument No	12012486.3
Status	Registered
Date & Time Lodged	23 February 2021 12:23
Lodged By	Cameron, Nichole Julienne
Instrument Type	Consent Notice under s221(4)(a) Resource Management Act 1991

Affected Records of Title	Land District
973221	North Auckland
973222	North Auckland
973223	North Auckland
973224	North Auckland
973225	North Auckland
973226	North Auckland
973227	North Auckland
973228	North Auckland

Annexure Schedule Contains 4 Pages.

Signature

Signed by Christopher Calder Hamilton Allan as Territorial Authority Representative on 22/02/2021 11:57 AM

***** End of Report *****

KDC - Approved Building Consent Document - BC210441 - Pg 23 of 27 - 30/08/2021 - ComplyNZ

KDC - Approved Building Consent Document - BC210441 - Pg 24 of 27 - 30/08/2021 - ComplyNZ

IN THE MATTER of the Resource Management Act 1991 (**"Act"**)

A N D

IN THE MATTER of the subdivision of land shown in Deposited Plan 556753 (North Auckland Land Registration District) (**"Plan"**)

CONSENT NOTICE
(Section 221 of the Act)

KAIPARA DISTRICT COUNCIL (**"Council"**) being the territorial authority of the district within which the land described in the First Schedule below (**"Land"**) is located has consented to the subdivision of the Land as shown in the Plan, subject to the conditions of the Second Schedule below to be complied with on a continuing basis by the Owner (as defined in the Act).

FIRST SCHEDULE
(Land)

Lot 2 on Deposited Plan 430128 and 1/59 share Lot 100-103, 106, 200, 202 Deposited Plan 404128 and Lot 1 Deposited Plan 430128 and Lot 1 Deposited Plan 482523

SECOND SCHEDULE
(Conditions)

The Owner (as defined in the Act) must, on a continuing basis, to the satisfaction of the Council, comply with the following conditions of the Council's Subdivision Consent RM190258, namely:

1. In respect of Lots 81-84 and Lots 91 to 94 on the Plan (each a "Lot").

   (i) Earthworks, the location of buildings, building foundations and stormwater and wastewater disposal shall be subject to specific engineering design by a suitably qualified Chartered Professional Engineer having regard to any soil instability/saturation issues that may exist or arise as a result of the development. Design shall take into account the recommendations identified in the Engineering Suitability Report prepared by Hawthorn Geddes dated 12 July 2019 and submitted to Council with subdivision consent RM190258.

   (ii) At the time of lodging a building consent for a habitable building on the lots and before issuing a Code of Compliance for that building, a vehicle crossing and driveway must be

KDC - Approved Building Consent Document - BC210441 - Pg 25 of 27 - 30/08/2021 - ComplyNZ

constructed which meets the requirements of the Kaipara District Council Engineering Standards 2011.

(iii) At the time of lodging a building consent, a site specific landscape plan prepared by a suitably qualified and experienced Landscape Architect shall be submitted to the Council for approval and be approved. The landscape plan shall refer to Appendix 10 - Building Site Landscape Planting Plan examples within the Assessment of Landscape and Visual Effects prepared by Hawthorn Landscape Architects dated 20 August 2019 and integrate any future buildings within each lot with the landscape, using planting that reflects the character of the surrounding landscape and should include but not be limited to the following:

- A description of the purpose and objectives of the planting.
- A plan of the planted areas detailing proposed plant species, plant sourcing, plant sizes at time of planting, plant locations, density of planting and timing of planting, height and density upon maturity.
- A programme of establishment and post establishment protection and maintenance (e.g. planting method, fertilising, weed removal / spraying, replacement of dead or poorly performing plants, watering, length of maintenance programme). Management of the vegetation within the lot shall be the responsibility of the Lot owner.
- Details of weed management.
- Details of certification process once established

(iv) All works described in the approved site specific landscape plan (above) shall be implemented to the satisfaction of the Council or their delegated representative within the next available planting season following approval of the plan. Evidence shall be prepared by a qualified and experienced landscape architect that the planting required has been implemented to the satisfaction of Council or their delegated representative.

(v) The planting undertaken in accordance with the approved Landscape Plan and the approved site specific landscape plan for this lot created by resource consent RM190258 shall be maintained in perpetuity to the satisfaction of Council or their delegated authority. Should the vegetation be removed or die off, equivalent landscape planting is to be undertaken immediately for the purposes of softening the overall effect of the development and protecting rural character and amenity values in the area.
Note: No plants listed in Section 6 of the Northland Regional Pest and Marine Pathway Management Plan 2017- 2027 are permitted.

(vi) All planting on site shall be maintained in accordance with the approved Ecological Enhancement Plan. Evidence of compliance with this requirement shall be provided to Council in writing by a suitably qualified ecologist five years from the date of issue of titles for RM190258. Maintenance of planting will be monitored by Council for a period of five years from the date of issuing of 224 certificate for RM190258. There will be a Council charge for this monitoring payable by the lot owner.

(vii) Ongoing weed and pest control shall be undertaken in accordance with the approved Ecological Enhancement Plan in perpetuity. Evidence of compliance with this requirement shall be provided to Council in writing by a suitably qualified ecologist five years from the date of issuing of 224 certificate for RM190258.

KDC - Approved Building Consent Document - BC210441 - Pg 26 of 27 - 30/08/2021 - ComplyNZ

Weed and pest plant control will be monitored by Council for a period of five years from the date of issuing of 224 certificate for RM190258. There will be a Council charge for this monitoring payable by the lot owner.

(viii) The keeping of mustelids and rodents on the lots is prohibited. Cats shall be limited to no more than two cats for each lot and they shall be required to wear a bell when outside.

No cats or dogs shall be permitted within the conservation covenanted areas and appropriate signs/symbols to this effect shall be erected and maintained at any access points to the conservation covenanted areas.

(ix) Within the lots, dogs shall not be kept on the lot unless the following conditions are complied with:

1. Any dog kept on the lot shall be secured/contained at all times to ensure that they cannot roam into the covenant area on the lot or beyond the boundaries of the lot. Containment shall be demonstrated to the satisfaction of the Council's Team Leader Monitoring and Compliance and may be in the form of an "electronic pet containment fence", secure fenced area or dog run. For the purposes of this condition, "electronic pet containment fence" means a system installed or attached to the perimeter of a defined area (or wireless equivalent) which is designed to prevent dogs escaping by transmitting a digital or electronic signal to a receiver collar worn by the dog.

2. Ongoing compliance with this condition will be monitored by Council. There will be a Council charge for this monitoring payable by the lot owner.

(x) All buildings must be located within the identified building areas shown on the Plan.

Lot	DP	Record of Title	Building Site
81	556753	973221	N
82	556753	973222	O
83	556753	973223	P
84	556753	973224	Q
91	556753	973225	R
92	556753	973226	S
93	556753	973227	T
94	556753	973228	U

(xi) No buildings shall be constructed within the identified areas to be retained as open space within the lots.

(xii) Sufficient firefighting water supply shall be provided for any single residential dwelling on the lot(s) with a minimum volume of 10,000 litres and shall remain accessible and available all year round.

Sufficient firefighting water supply shall be provided for any commercial or industrial land use on the lot(s). Sufficient firefighting water supply is deemed to mean meeting full criteria of the Code of Practice for firefighting water supplies (SNZ PAS 4509:2008 New Zealand Fire Service Firefighting Water Supplies Code of Practice.

KDC - Approved Building Consent Document - BC210441 - Pg 27 of 27 - 30/08/2021 - ComplyNZ

(xiii) All buildings shall be sited and constructed, and landscaping provided in accordance with the Sanctuary Building and Landscaping Guidelines.

(xiv) The site specific landscaping plan required above shall be accompanied by evidence of compliance with the Sanctuary Building and Landscaping Guidelines and associated consultation with the Sanctuary Residents Association who administer the guidelines.

(xv) At the time of building consent suitable engineering evidence/design shall be provided to demonstrate that on site stormwater attenuation will be provided to limit peak flows from impervious areas to less than 1.2l/sec/100m^2 impervious area during a 20% Annual Event Probability (AEP) storm event and 1.2l/sec/100m^2 impervious area during a 1% AEP storm event. The evidence/design shall take into account the findings and recommendations of the Stormwater Management Staging Letter prepared by Hawthorn Geddes dated 25 June 2020 and submitted to Council with subdivision consent RM190258.

(xvi) Future lot owners are advised that no physical telecommunication connections are provided and the Kaipara District Council will not be responsible for ensuring nor providing telecommunication connections to the lots.

DATED the 16th day of February 2021

SIGNED by)
KAIPARA DISTRICT COUNCIL)
by its authorised signatory)

Dina Tetzner

Kaipara te Oranganui

KAIPARA DISTRICT

Two Oceans Two Harbours

Approved Building Consent Documents

Kaipara District Council
Approved Building Consent Document

BC210441 - Pg 1 of 46

30/08/2021 ComplyNZ

Please note: A copy of the stamped, approved documents must be available onsite for **all** inspections.

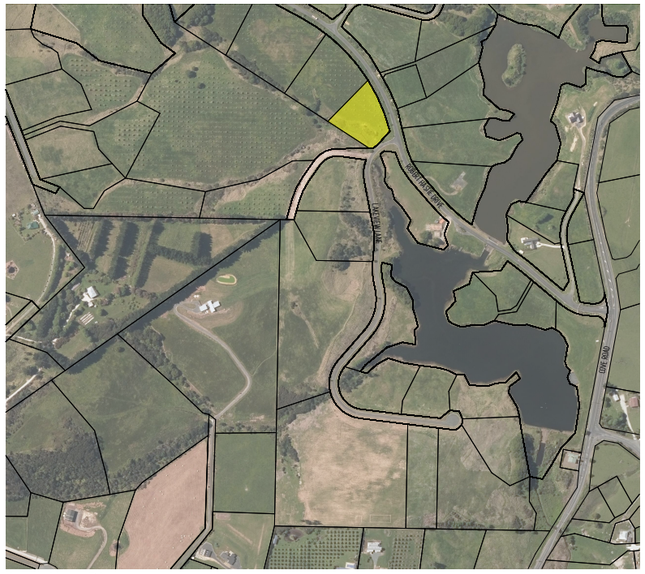

Location Plan

ID	Layout Name	Revision ID
	Cover	02
001	General	01
101	Overall Site Plan	02
102	Site Plan	02
103	Earthworks Plan	01
201	Floor Plan	02
301	Elevations	02
302	Elevations	02
401	Cross Sections	02
402	Cross Sections	02
403	Cross Sections	02
501	Foundation Plan	02
502	Dimension Plan	02
503	Bracing + Fixing Plan	02
504	Roof Framing Plan	02
505	Roofing Plan	02
506	Reflected Ceiling Plan	02
507	Interior Elevation	01
601	Plumbing and Drainage Plan	02
602	Electrical & Ventilation Plan	02
701	Details - Foundation	01
702	Details - Foundation	01
703	Details - Foundation	01
704	Details - Cladding	01
705	Details - Cladding	01
706	Details - Roofing	01
707	Details - Roofing	01
708	Details - Fixing	01
709	Details - Fixing	01
710	Details - Bracing	01
711	Details - GIB	01
712	Details - GIB	01
713	Details - HWC	01
714	Details - Drainage	01
715	Details - Sediment Control	01
801	Exterior Door & Window Schedule	02
802	Internal Door Schedule	01
803	Bracing Calculations	02

Kaipara District Council
Approved Building Consent Document

BC210441 - Pg 2 of 46

30/08/2021 ComplyNZ

COASTAL HOMES

Project Title

ACDL Trustee Ltd. D&L Kendall

Site Address

Lot 81 The Sanctuary, Mangawhai

Drawing Issue

Building Consent

General

These drawings and the intellectual property it represents remain the copyright of CADetailer Limited.

These drawings must not be scaled. All dimensions to be read off the plans. All dimensions in millimetres unless stated otherwise otherwise.

Architectural Drawings to be read in conjunction with the Engineering Drawings, Specifications and Calculations

All work shall comply with the NZBC and all other relevant and associated standards, codes and Territorial Authority by-laws.

All work shall comply with the terms and conditions of the Building, Resource and Demolition Consents issued for this project.

All proprietary items and materials shall be handled, placed, stored, fixed, installed or applied in strict accordance with the manufacturers recommendations.

Contractor shall check and confirm on site all dimensions, levels, falls, heights etc. Any discrepancies or differences within the contract documents should be highlighted to the issuer of these drawings prior to starting the works.

Sediment and Soil run-off control shall be designed and installed by the licensed building practitioner prior to or during earthworks for the project. The sediment controls shall be installed in accordance with the requirements of the Territorial Authority.

Abbreviations

(Generally in accordance with NZS/AS 1100)

A	Area
AAV	Air Admittance Valve
AD	Above Datum
AFL	Above Floor Level
AP	Access Panel
Appr	Approved
AS	Australian Standard
B	Basin
BM	Benchmark
c/c	Centre to Centre
CB	Coach Bolt
CBI	Coordinated Building Information
CHS	Circular Hollow Section
cj	Control Joint
CL	Centre Line
cm	Centimeter
Conc	Concrete
Corr	Corrugated
COS	Check on Site
CP	Cesspit
crs	Centres
CS	Coach Screw
D	Desk
DB	Distribution Board
DEP	Dead End Path
DG	Disconnector Gully
DHS	Diamond Hi-Span (Purlin)
Dia	Diameter
Diag	Diagonal
Dim	Dimension
DN	Diameter Nominal
DP	Downpipe
DPC	Damp Proof Course
DPM	Damp Proof Membrane
DRG	Drawing
Dr	Dry
Du	Duct
Dw	Dishwasher
EA	Equal Angle
ej	Expansion Joint
EF	Extraction Fan
EH	Extra High
ENG	Engineer(ed)
F	Fridge
FL	Floor Level
FDL	Finished Deck Level
FFL	Finished Floor Level
FGL	Finished Ground Level
fg	Fixed Glass
FHR	Fire Hose Reel
FP	Fireplace
FRR	Fire Resistance Rating
Galv.	Galvanised
GB	Gas Bayonet
GC	Gas Califont
GT	Gully Trap
h	Hob
H	High
HD	Holding Down Bolt
HG	Hot Dipped Galvanised
HL	Heat Loss
Hor	Horizontal
HP	Heatpump
Ht	Hose tap
Hy	Hydrobox
IB	Inspection Board
ID	Inside Diameter
IL	Invert Level
IP	Inspection Point
kN	Kilonewton
kW	Kilowatt
l	Litre
L	Low
m	Metre
M	Medium
max.	Maximum
Mf	Manifold
Mi	Mirror
min.	Minimum
mm	Millimetre
MS	Mild Steel
Mx	Mixer
Mw	Microwave
N	Niche
nb	Nominal Bore
NZBC	New Zealand Building Code
NTS	Not to Scale
NZS	New Zealand Standard
O/A	Overall
O/F	Overflow
O/H	Overhead
od	Outside Diameter
ORG	Overflow Relief Gully
OU	Outdoor Unit
P	Power
pc	Precast Concrete
PFC	Parallel Flange Channel
R	Radius
RAB	Rigid Air Barrier
Rad	Radiata
RC	Reinforced Concrete
RE	Rodding Eye
REF	Reference
RH	Rangehood
RHS	Rolled Hollow Section
RL	Reducted Level
ROW	Right of Way
Rs	Rosehead
S	Sink
sc	Sawcut Joint
Sched	Schedule
SD	Smoke Detector
SED	Small End Diameter
SG8	Stress Grade 8
Sh	Shower
SHS	Square Hollow Section
Sht	Sheet
Sim	Similar
Sk	Sketch
SP	Soil Pipe
sq/m	Square Metre
SS	Sanitary Sewer
S/S	Stainless Steel
STC	Sound Transmission Class
SV	Stack Vent
SW	Stormwater
T	Tub
TBC	To be Confirmed
TFC	Tapered Flange Channel
TGV	Tongue, Groove and Vee Joint
TOP	Total Open Path
TV	Terminal Vent
Typ	Typical
t/s	Top Side
u/s	Under Side
UB	Universal Beam
UC	Universal Column
VH	Very High
W	Water
WC	Water Closet (Toilet)
WM	Washing Machine
WR	Wardrobe
WT	Wall Thickness

Zone Reference

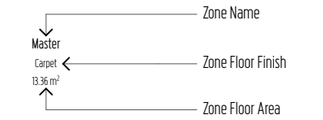

Exterior Joinery Coding

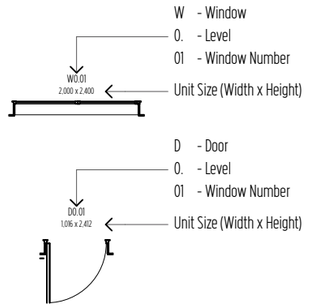

Drawing Titles

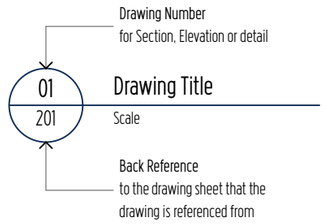

Drawing Markers

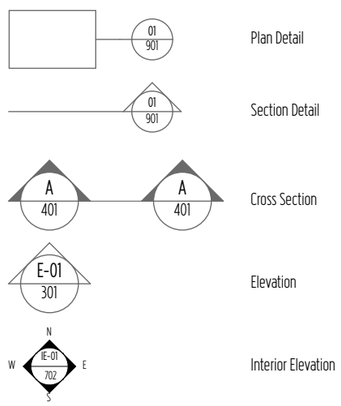

Expression of Levels


Spot level

FL	Floor Level - not including floor finishings
FFL	Finished Floor Level - including floor finishings
FGL	Finished Ground Level
FDL	Finished Deck Level
FPL	Finished Patio Level
FCL	Finished Ceiling Level
AFL	Above Floor Level

Floor Levels shown on sections & elevations

Relative level shown on sections & details

Kaipara District Council
Approved Building Consent Document

BC210441 - Pg 3 of 46

30/08/2021 ComplyNZ

COASTAL HOMES

Project Title

ACDL Trustee Ltd. D&L Kendall

Site Address

Lot 81 The Sanctuary, Mangawhai

Drawing Issue

Building Consent

Sheet Title

General

Scale	Drawn
N/A	Marc R. Vale
Date	Checked
27/06/21	CADetailer Ltd.
Drawing no.	Revision
001	01

All dimensions to be verified on site before commencing any work or producing shop drawings. Do not scale.
The copyright of this drawing remains with CH Northland Ltd and CADetailer Ltd.

RevID	ChID	Change Name	Date
01			27/06/21

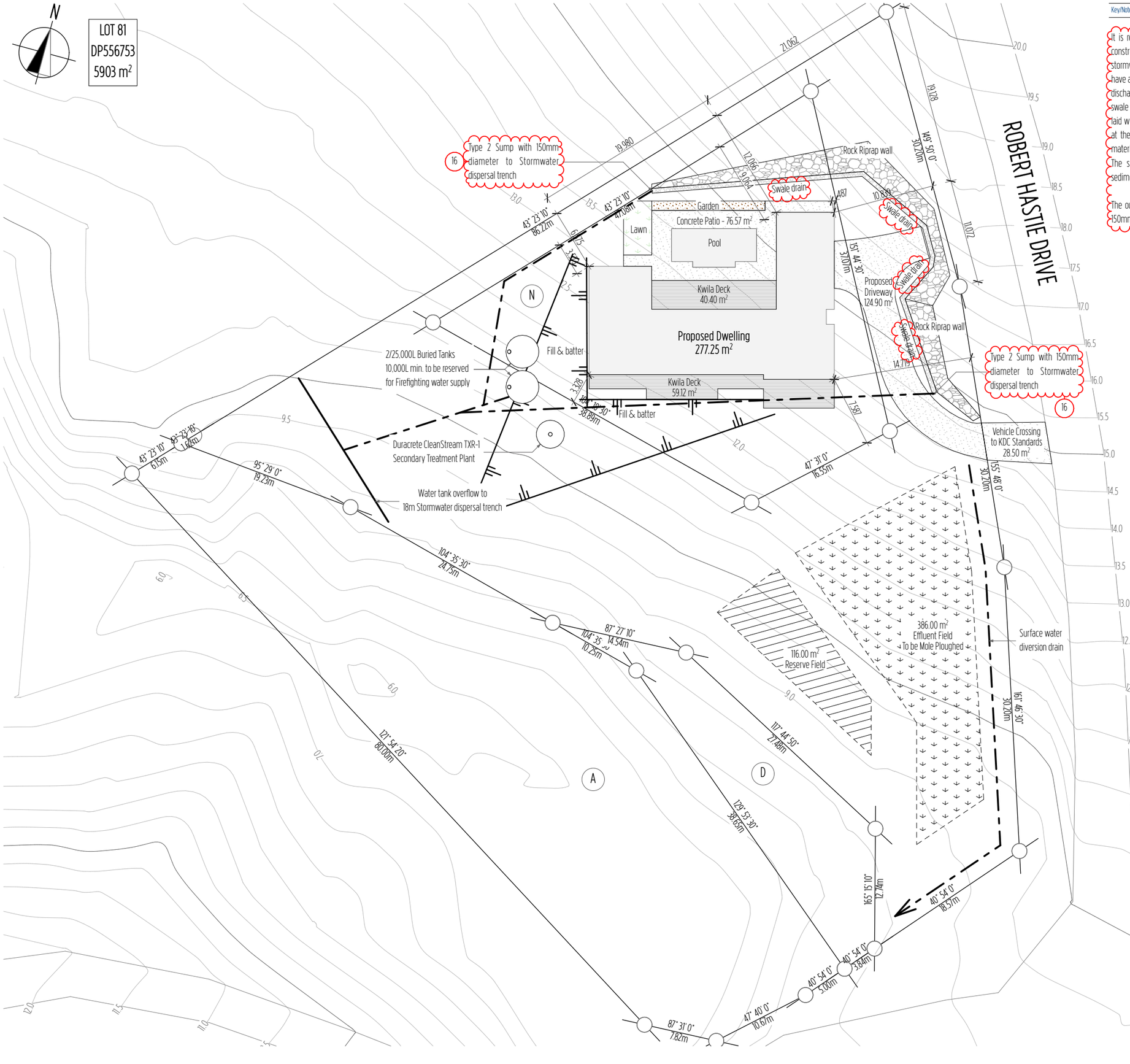

Key/Notes

It is recommended that a swale drain or simple v-drain is constructed upslope of the proposed house site to help catch stormwater run-off from the upslope areas. The drain should have a minimum width of 500 mm and depth of 300 mm and discharge downslope clear of the proposed dwelling. The swale should be situated towards the base of the cut and be laid with a minimum gradient of 1% towards a sump structure at the lowest point. The sump shall aid in filtering out any material which could block or fill up the stormwater pipes. The sump should be routinely inspected for debris and sediment, and cleaned out if required.

The outflow from the sump should then be conveyed via a 150mm closed pipe to proposed water tank overflow location.

16

Key/Notes

Wind Zone -	High
Earthquake Zone -	1
Exposure Zone -	C
Climate Zone -	1
Territorial Authority -	Kaipara District Council
Environment -	Rural Harbour

Coverage - 35% max.
Actual Coverage - 3.84%

Impermeable Surfaces - 10% max.
Actual Impermeable Surfaces = 9.04%

Levels are in terms of the NZVD2016 Datum

Temporary Site Fences to be constructed around the site as per New Zealand Building Code Clause F5/AS1

Sediment and runoff control shall be designed and installed by the licensed building practitioner prior to or during earthworks for the project. The sediment controls shall be installed in accordance with the requirements of the acceptable guidelines for erosion and sediment control are documented in the ARC publication TP90.

Sediment and erosion control measures shall be the responsibility of the main contractor and shall be regularly checked and maintained as required during construction. Refer to earthworks plan for sediment control locations.

Refer to the On-site 'secondary' wastewater treatment / disposal system design reference WW_21076 by Wiley Geotechnical Ltd. dated 1 June 2021.

Kaipara District Council
Approved Building Consent Document
BC210441 - Pg 4 of 46
30/08/2021 ComplyNZ

COASTAL HOMES

Project Title
ACDL Trustee Ltd. D&L Kendall

Site Address
Lot 81 The Sanctuary, Mangawhai

Drawing Issue
Building Consent

Sheet Title
Overall Site Plan

Scale	Drawn
1:400 @ A3	Marc R. Vale
Date	Checked
18/08/21	CADetailer Ltd.
Drawing no.	Revision
101	06

All dimensions to be verified on site before commencing any work or producing shop drawings. Do not scale.
The copyright of this drawing remains with CH Northland Ltd and CADetailer Ltd.

RevID	ChID	Change Name	Date
03	02	Water tank overflow	30/06/21
04	03	Firefighting water reserve	12/07/21
05	04	Stormwater dispersal	19/07/21
06	16	Site drainage	18/08/21

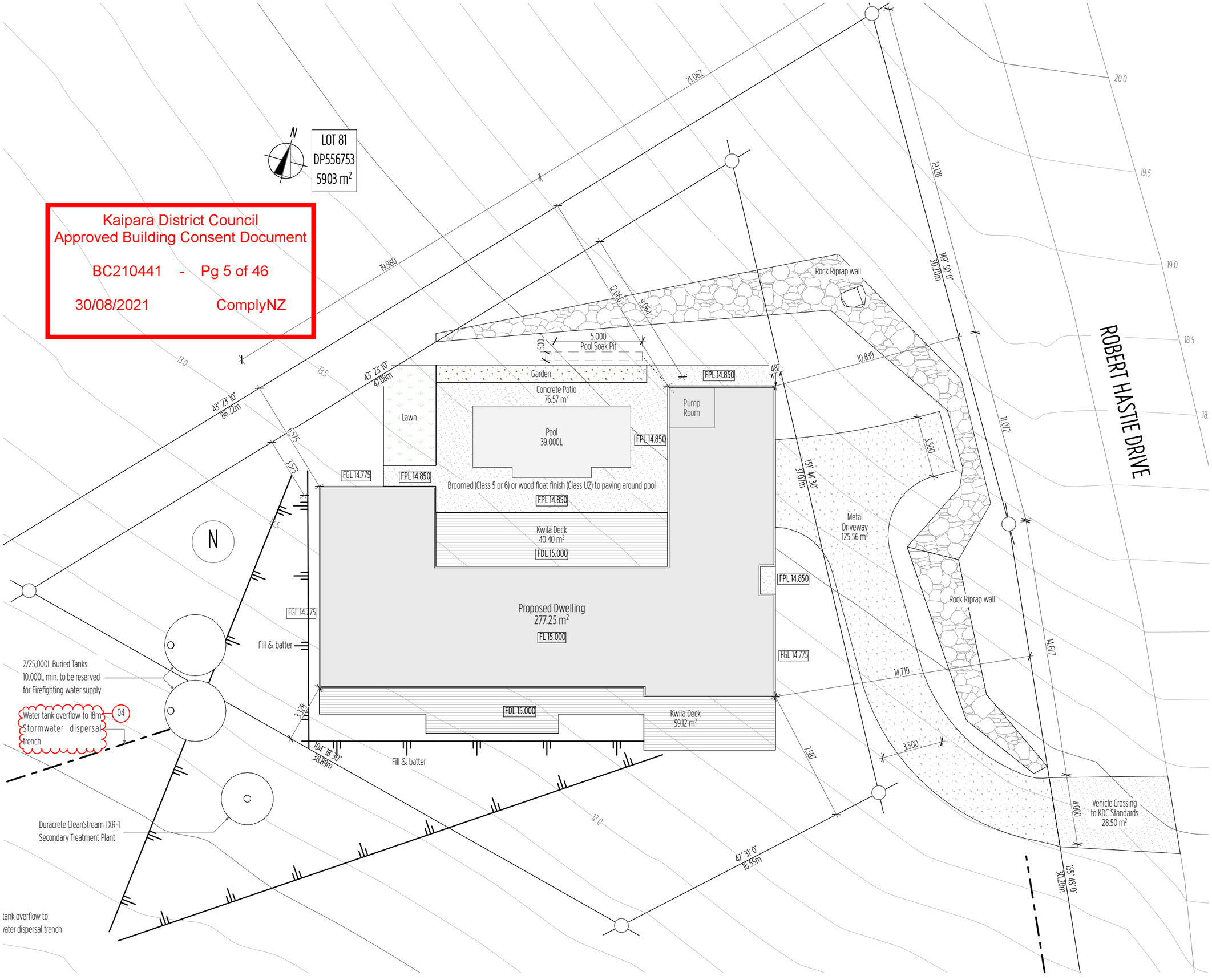

Key/Notes

Wind Zone -	High
Earthquake Zone -	1
Exposure Zone -	C
Climate Zone -	1
Territorial Authority -	Kaipara District Council
Environment -	Rural Harbour

Levels are in terms of the NZVD2016 Datum

A minimum 200 mm layer of compacted hard fill is recommended to be placed for a waffle slab (i.e Rib-Raft) with the foundation being designed for expansive site class 'M – Moderate', as per AS 2870. All topsoil and fill material must be removed before foundation construction commences.

Refer to the Geotechnical Investigation reference 21076 by Wiley Geotechnical Ltd. dated 27 May 2021 for specific site preparation details, bearing depth and capacity.

Broomed (Class 5 or 6) or wood float finish (Class U2) to all access route paving

Temporary Site Fences to be constructed around the site as per New Zealand Building Code Clause F5/AS1

Sediment and runoff control shall be designed and installed by the licensed building practitioner prior to or during earthworks for the project. The sediment controls shall be installed in accordance with the requirements of the acceptable guidelines for erosion and sediment control are documented in the ARC publication TP90.

Sediment and erosion control measures shall be the responsibility of the main contractor and shall be regularly checked and maintained as required during construction. Refer to earthworks plan for sediment control locations.

COASTAL HOMES

Project Title

ACDL Trustee Ltd. D&L Kendall

Site Address

Lot 81 The Sanctuary, Mangawhai

Drawing Issue

Building Consent

Sheet Title

Site Plan

Scale	Drawn
1:200 @ A3	Marc R. Vale
Date	Checked
19/07/21	CADetailer Ltd.
Drawing no.	Revision
102	05

All dimensions to be verified on site before commencing any work or producing shop drawings. Do not scale.
The copyright of this drawing remains with CH Northland Ltd and CADetailer Ltd.

RevID	ChID	Change Name	Date
02	01	Building Consent	27/06/21
03	02	Water tank overflow	30/06/21
04	03	Firefighting water reserve	12/07/21
05	04	Stormwater dispersal	19/07/21

Kaipara District Council
Approved Building Consent Document

BC210441 - Pg 6 of 46

30/08/2021 ComplyNZ

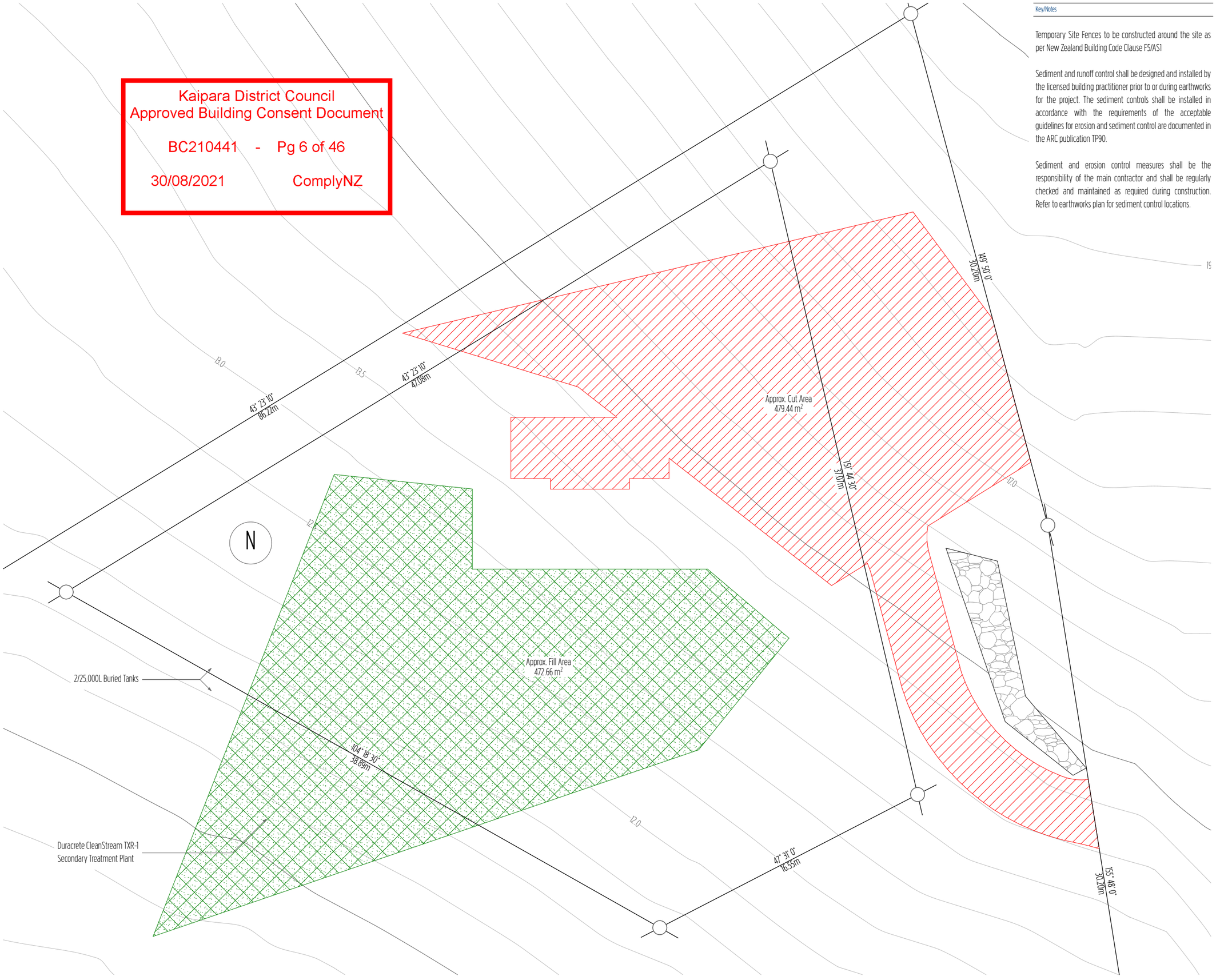

Key/Notes

Temporary Site Fences to be constructed around the site as per New Zealand Building Code Clause F5/AS1

Sediment and runoff control shall be designed and installed by the licensed building practitioner prior to or during earthworks for the project. The sediment controls shall be installed in accordance with the requirements of the acceptable guidelines for erosion and sediment control are documented in the ARC publication TP90.

Sediment and erosion control measures shall be the responsibility of the main contractor and shall be regularly checked and maintained as required during construction. Refer to earthworks plan for sediment control locations.

Key/Notes

Refer to the Geotechnical Investigation reference 21076 by Wiley Geotechnical Ltd. dated 27 May 2021 for specific site preparation details, bearing depth and capacity.

Wiley Geotechnical Ltd recommend that the earthworks are undertaken by an experienced contractor familiar with the contents of this report and is experienced in these soils.

It is considered that the vast majority of on-site soil material shall be suitable to be utilised as engineered fill supporting the proposed residential development. This is expected to primarily consist of silty clay soil and highly to completely weathered rock material. We recommend that all overlying topsoil and organic rich material is stripped and removed from the proposed cut areas prior to excavating the in-situ soil material. The excavated in-situ soil should be handled separately to the topsoil material. No topsoil should be used as, mixed with or remain below any engineered fill material. The cut excavation areas should be graded to allow the flow of stormwater away from the area. Suitable erosion and sediment control methodologies should be employed. Any sloping ground that is excavated into should be battered back to a slope of 3:1 (H:V). Once cut excavation are complete planting or regressing of the areas may have to be employed or long-term erosion and sediment control measures implemented. At this point we would envisage a maximum allowable slope of on-site engineered fill material being 3:1 (H:V), while imported engineered hardfill may be placed up to a maximum slope of 2:1 (H:V).

A minimum 200 mm layer of compacted hard fill is recommended to be placed for a waffle slab (i.e Rib-Raft) with the foundation being designed for expansive site class 'M – Moderate', as per AS 2870. All topsoil and fill material must be removed before foundation construction commences.

Approximate Earthworks
Total Fill Area - 472.66 m²
Total Fill Volume - 131.23 m³
Total Cut Area - 479.44 m²
Total Cut Volume - 155.50 m³
Total Earthworks Area - 952.10 m²
Total Earthworks Volume - 286.73 m³

COASTAL HOMES

Project Title
ACDL Trustee Ltd. D&L Kendall

Site Address
Lot 81 The Sanctuary, Mangawhai

Drawing Issue
Building Consent

Sheet Title
Earthworks Plan

Scale	Drawn
1:200 @ A3	Marc R. Vale
Date	Checked
27/06/21	CADetailer Ltd.
Drawing no.	Revision
103	01

All dimensions to be verified on site before commencing any work or producing shop drawings. Do not scale.
The copyright of this drawing remains with CH Northland Ltd and CADetailer Ltd.

RevID	ChID	Change Name	Date
01			27/06/21

Kaipara District Council
Approved Building Consent Document

BC210441 - Pg 7 of 46

30/08/2021 ComplyNZ

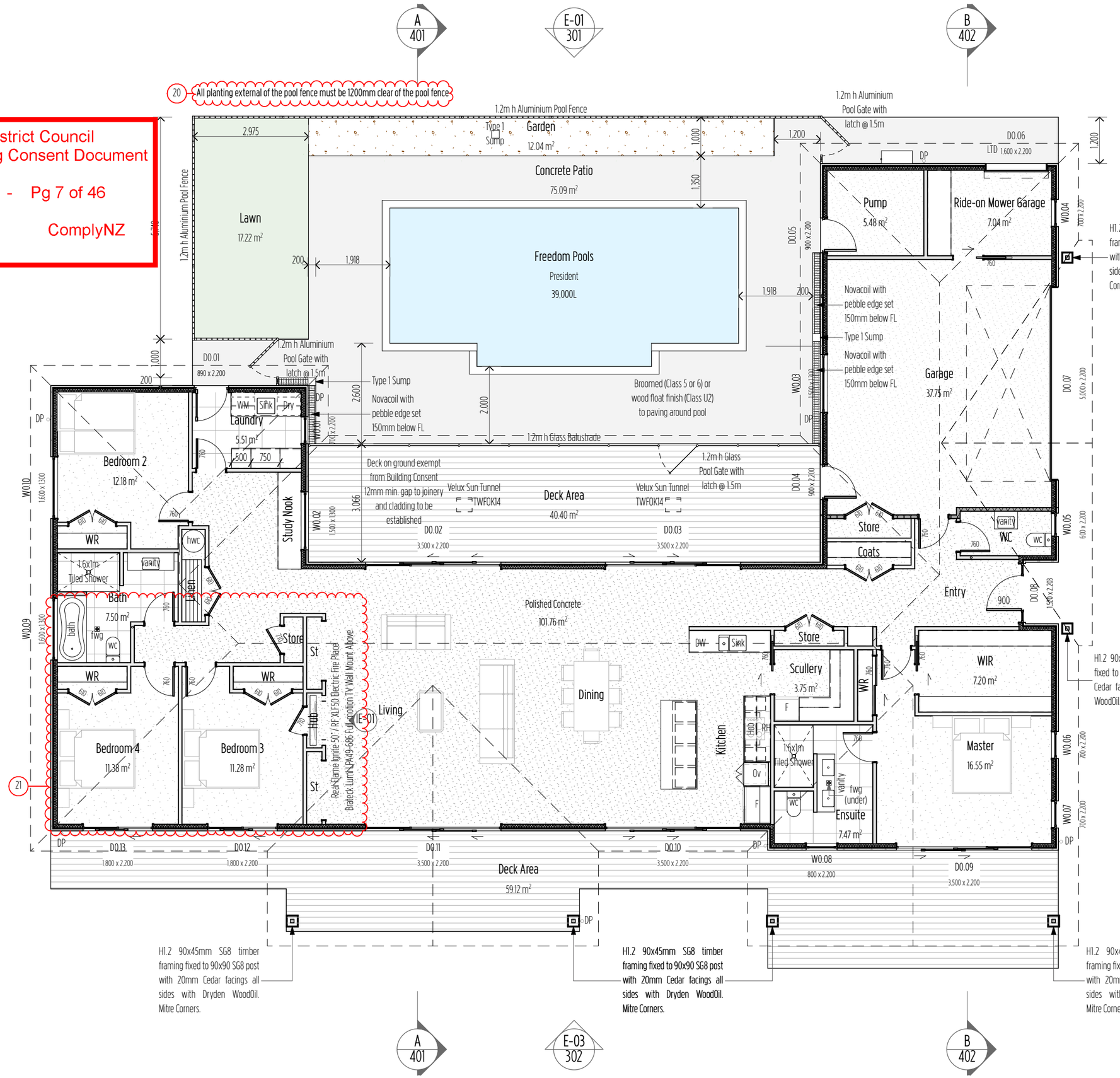

Key/Notes

- Insulated H1.2 SG8 wall framing
- Acoustic insulated H1.2 SG8 wall framing
- Un-insulated H1.2 SG8 wall framing

Waterproofing Membrane installed to entire bathroom/ensuite floor area with 2.1m upstand on walls 1.5m from corner of shower

All flooring tiles to a mean coefficient of friction no less than 0.4

Square stop to ceiling/wall junction

Internal shower glass to be safety glass

Main access deck to be in place for the final inspection, any steps to be max. 190mm riser and min. 280mm tread

Ground Floor Area over Framing
269.69 m²

Ground Floor Area over Cladding
277.25 m²

COASTAL HOMES

Project Title
ACDL Trustee Ltd. D&L Kendall

Site Address
Lot 81 The Sanctuary, Mangawhai

Drawing Issue
Building Consent

Sheet Title
Floor Plan

Scale	Drawn
1:100 @ A3	Marc R. Vale
Date	Checked
25/08/21	CADetailer Ltd.
Drawing no.	Revision
201	04

All dimensions to be verified on site before commencing any work or producing shop drawings. Do not scale.
The copyright of this drawing remains with CH Northland Ltd and CADetailer Ltd.

RevID	ChID	Change Name	Date
03	10	Cedar coating	18/08/21
	14	Door swings	
04	20	Pool fence landscaping clearance	25/08/21
	21	Lounge wall moved closer	



E-01
201

North Elevation

Scale 1:100



E-02
201

East Elevation

Scale 1:100

Risk Factor	Description	Risk	Score
Wind Zone	High	M	1
Number of Storeys	Single Storey	L	0
Roof/Wall Intersection Design	Fully protected (e.g. hip and gable roof with eaves)	L	0
Eaves Width	450mm - 600mm wide	M	1
Envelope Complexity	Simple L-shape with single cladding type.	L	0
Deck Design	Timber slat deck at ground floor level	L	0
		Total Score: 2	
Selected Cladding:	Stucco over nominal 20mm drained cavity		

Kaipara District Council
Approved Building Consent Document

BC210441 - Pg 8 of 46

30/08/2021 ComplyNZ

COASTAL HOMES

Project Title

ACDL Trustee Ltd. D&L Kendall

Site Address

Lot 81 The Sanctuary, Mangawhai

Drawing Issue

Building Consent

Sheet Title

Elevations

Scale	Drawn
1:100 @ A3	Marc R. Vale
Date	Checked
18/08/21	CADetailer Ltd.
Drawing no.	Revision
301	03

All dimensions to be verified on site before commencing any work or producing shop drawings. Do not scale.
The copyright of this drawing remains with CH Northland Ltd and CADetailer Ltd.

RevID	ChID	Change Name	Date
01			14/05/21
02	01	Building Consent	27/06/21
03	05	Skylights added	18/08/21
	10	Cedar coating	



E-03 / 201

South Elevation

Scale 1:100

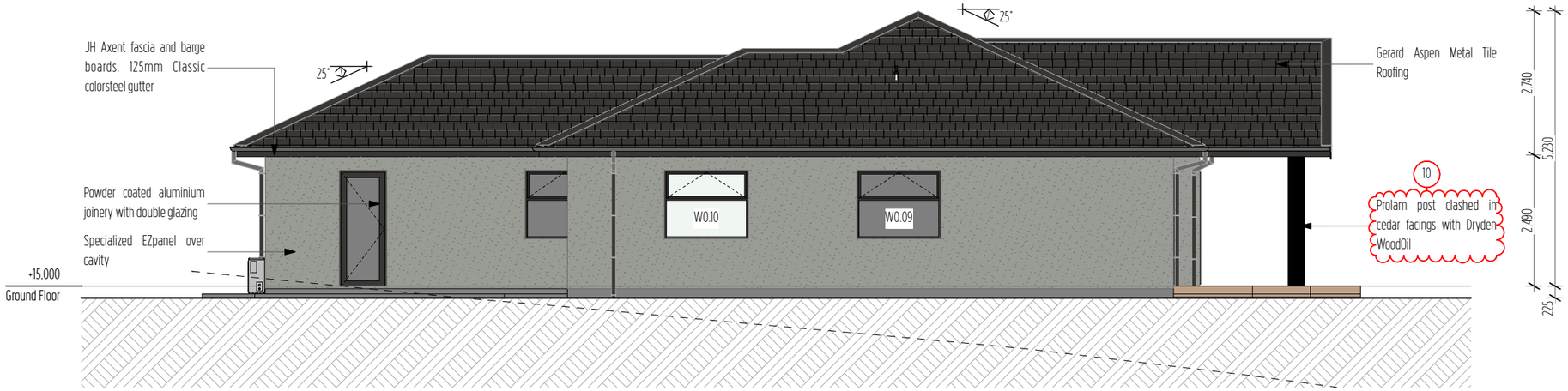

E-04 / 201

West Elevation

Scale 1:100

Risk Factor	Description	Risk	Score
Wind Zone	High	M	1
Number of Storeys	Single Storey	L	0
Roof/Wall Intersection Design	Fully protected (e.g. hip and gable roof with eaves)	L	0
Eaves Width	450mm - 600mm wide	M	1
Envelope Complexity	Simple L-shape with single cladding type.	L	0
Deck Design	Timber slat deck at ground floor level	L	0
		Total Score: 2	
Selected Cladding:	Stucco over nominal 20mm drained cavity		

Kaipara District Council
Approved Building Consent Document

BC210441 - Pg 9 of 46

30/08/2021 ComplyNZ

COASTAL HOMES

Project Title

ACDL Trustee Ltd. D&L Kendall

Site Address

Lot 81 The Sanctuary, Mangawhai

Drawing Issue

Building Consent

Sheet Title

Elevations

Scale	Drawn
1:100 @ A3	Marc R. Vale
Date	Checked
18/08/21	CADetailer Ltd.
Drawing no.	Revision
302	03

All dimensions to be verified on site before commencing any work or producing shop drawings. Do not scale.
The copyright of this drawing remains with CH Northland Ltd and CADetailer Ltd.

RevID	ChID	Change Name	Date
01			14/05/21
02	01	Building Consent	27/06/21
03	10	Cedar coating	18/08/21

Stud Framing as per NZS 3604:2011 Section 8 - Walls		High Wind
from Table 8.2 - Load bearing walls		
Stud height	Stud size	Stud Spacing
2.7m	90x45mm	400crs
3.0m	90x45mm	300crs
3.6m	2/90x45mm	300crs
from Table 8.4 - Non-load bearing walls		
Stud height	Stud size	Stud Spacing
2.7m	90x45mm	400crs
3.0m	90x45mm	300crs

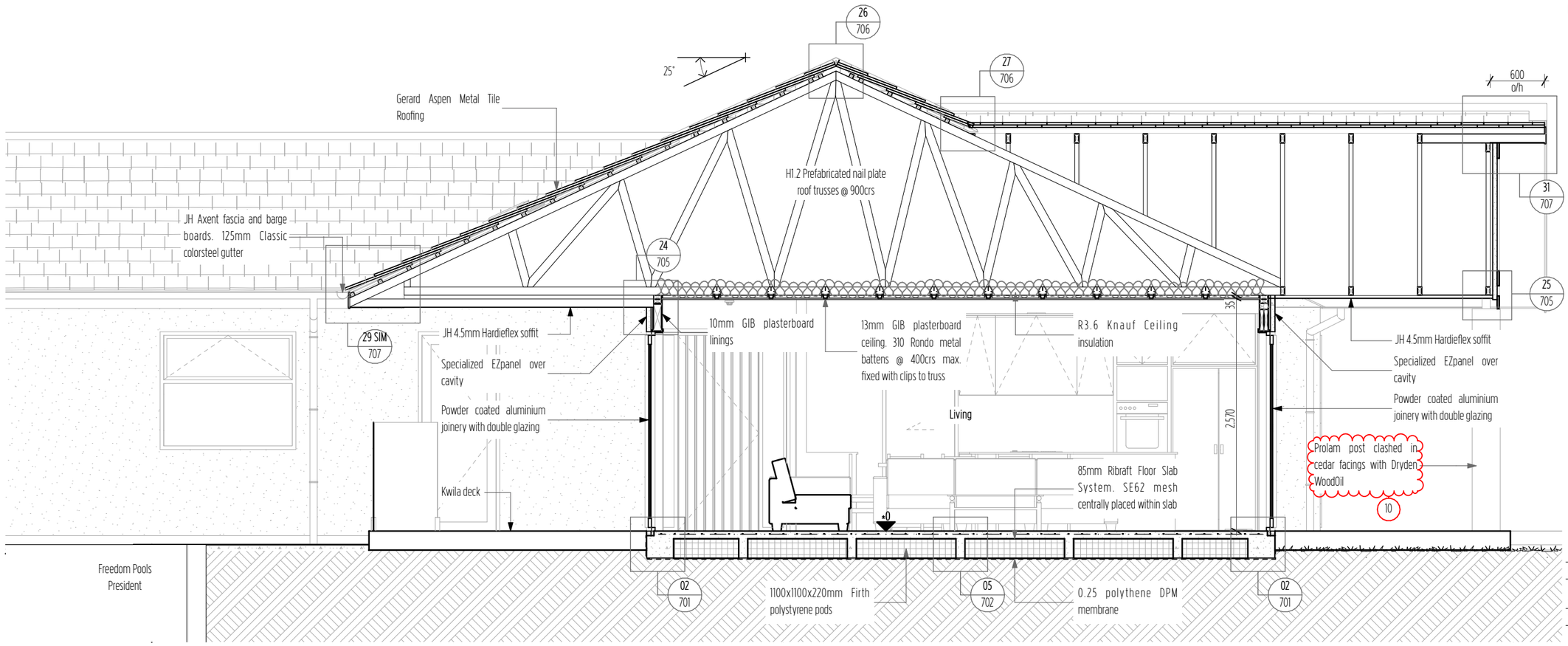

A
201, 504
Cross Section A-A
Scale 1:50

Key/Notes

Refer to the Geotechnical Investigation reference 21076 by Wiley Geotechnical Ltd. dated 27 May 2021 for specific site preparation details, bearing depth and capacity.

A minimum 200 mm layer of compacted hard fill is recommended to be placed for a waffle slab (i.e Rib-Raft) with the foundation being designed for expansive site class 'M – Moderate', as per AS 2870. All topsoil and fill material must be removed before foundation construction commences.

Square stop to ceiling/wall junction

All structural fixings sheltered and exposed in Exposure Zone D to be Type 304 stainless steel as per NZS3604:2011

Kaipara District Council
Approved Building Consent Document

BC210441 - Pg 10 of 46

30/08/2021 ComplyNZ

COASTAL HOMES

Project Title
ACDL Trustee Ltd. D&L Kendall

Site Address
Lot 81 The Sanctuary, Mangawhai

Drawing Issue
Building Consent

Sheet Title
Cross Sections

Scale	Drawn
1:50 @ A3	Marc R. Vale
Date	Checked
18/08/21	CADetailer Ltd.
Drawing no.	Revision
401	03

All dimensions to be verified on site before commencing any work or producing shop drawings. Do not scale.
The copyright of this drawing remains with CH Northland Ltd and CADetailer Ltd.

RevID	ChID	Change Name	Date
01			14/05/21
02	01	Building Consent	27/06/21
03	10	Cedar coating	18/08/21

Stud Framing as per NZS 3604:2011 Section 8 - Walls		High Wind
from Table 8.2 - Load bearing walls		
Stud height	Stud size	Stud Spacing
2.7m	90x45mm	400crs
3.0m	90x45mm	300crs
3.6m	2/90x45mm	300crs
from Table 8.4 - Non-load bearing walls		
Stud height	Stud size	Stud Spacing
2.7m	90x45mm	400crs
3.0m	90x45mm	300crs

Kaipara District Council
Approved Building Consent Document
BC210441 - Pg 11 of 46
30/08/2021 ComplyNZ

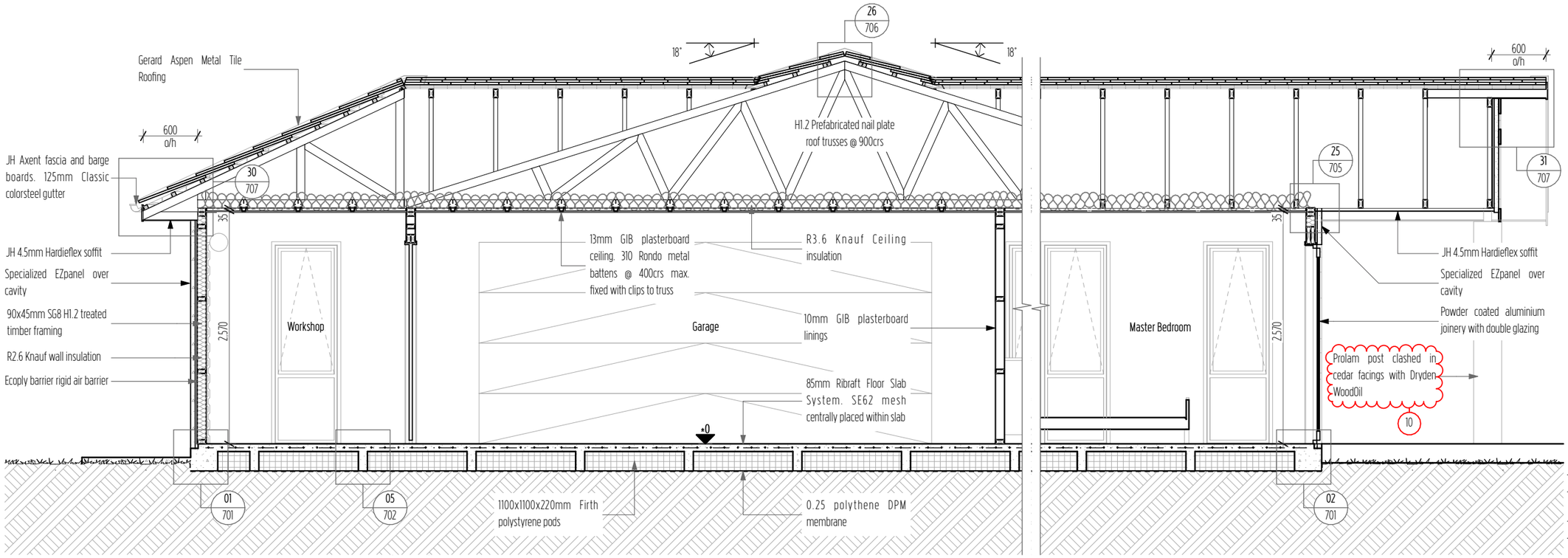

B
201, 504

Cross Section B-B

Scale 1:50

Key/Notes

Refer to the Geotechnical Investigation reference 21076 by Wiley Geotechnical Ltd. dated 27 May 2021 for specific site preparation details, bearing depth and capacity.

A minimum 200 mm layer of compacted hard fill is recommended to be placed for a waffle slab (i.e Rib-Raft) with the foundation being designed for expansive site class 'M – Moderate', as per AS 2870. All topsoil and fill material must be removed before foundation construction commences.

Square stop to ceiling/wall junction

All structural fixings sheltered and exposed in Exposure Zone D to be Type 304 stainless steel as per NZS3604:2011

COASTAL HOMES

Project Title

ACDL Trustee Ltd. D&L Kendall

Site Address

Lot 81 The Sanctuary, Mangawhai

Drawing Issue

Building Consent

Sheet Title

Cross Sections

Scale	Drawn
1:50 @ A3	Marc R. Vale
Date	Checked
18/08/21	CADetailer Ltd.
Drawing no.	Revision
402	03

All dimensions to be verified on site before commencing any work or producing shop drawings. Do not scale.
The copyright of this drawing remains with CH Northland Ltd and CADetailer Ltd.

RevID	ChID	Change Name	Date
01			14/05/21
02	01	Building Consent	27/06/21
03	10	Cedar coating	18/08/21

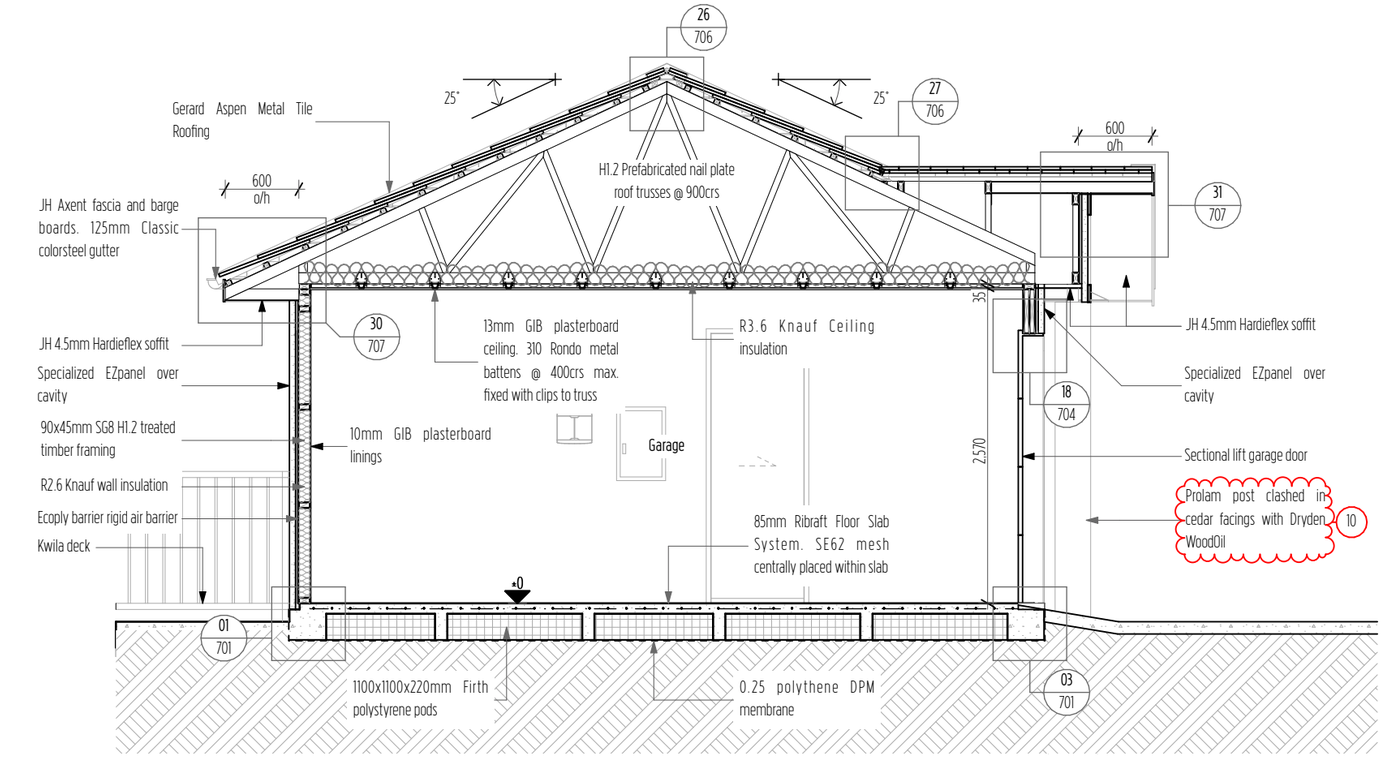

C
201, 504

Cross Section C-C

Scale 1:50

Key/Notes

Refer to the Geotechnical Investigation reference 21076 by Wiley Geotechnical Ltd. dated 27 May 2021 for specific site preparation details, bearing depth and capacity.

A minimum 200 mm layer of compacted hard fill is recommended to be placed for a waffle slab (i.e Rib-Raft) with the foundation being designed for expansive site class 'M – Moderate', as per AS 2870. All topsoil and fill material must be removed before foundation construction commences.

Square stop to ceiling/wall junction

All structural fixings sheltered and exposed in Exposure Zone D to be Type 304 stainless steel as per NZS3604:2011

Stud Framing as per NZS 3604:2011
Section 8 - Walls — High Wind

from Table 8.2 - Load bearing walls

Stud height	Stud size	Stud Spacing
2.7m	90x45mm	400crs
3.0m	90x45mm	300crs
3.6m	2/90x45mm	300crs

from Table 8.4 - Non-load bearing walls

Stud height	Stud size	Stud Spacing
2.7m	90x45mm	400crs
3.0m	90x45mm	300crs

Kaipara District Council
Approved Building Consent Document
BC210441 - Pg 12 of 46
30/08/2021 ComplyNZ

COASTAL HOMES

Project Title
ACDL Trustee Ltd. D&L Kendall

Site Address
Lot 81 The Sanctuary, Mangawhai

Drawing Issue
Building Consent

Sheet Title
Cross Sections

Scale	Drawn
1:50 @ A3	Marc R. Vale
Date	Checked
18/08/21	CADetailer Ltd.
Drawing no.	Revision
403	03

All dimensions to be verified on site before commencing any work or producing shop drawings. Do not scale.
The copyright of this drawing remains with CH Northland Ltd and CADetailer Ltd.

RevID	ChID	Change Name	Date
01			14/05/21
02	01	Building Consent	27/06/21
03	10	Cedar coating	18/08/21

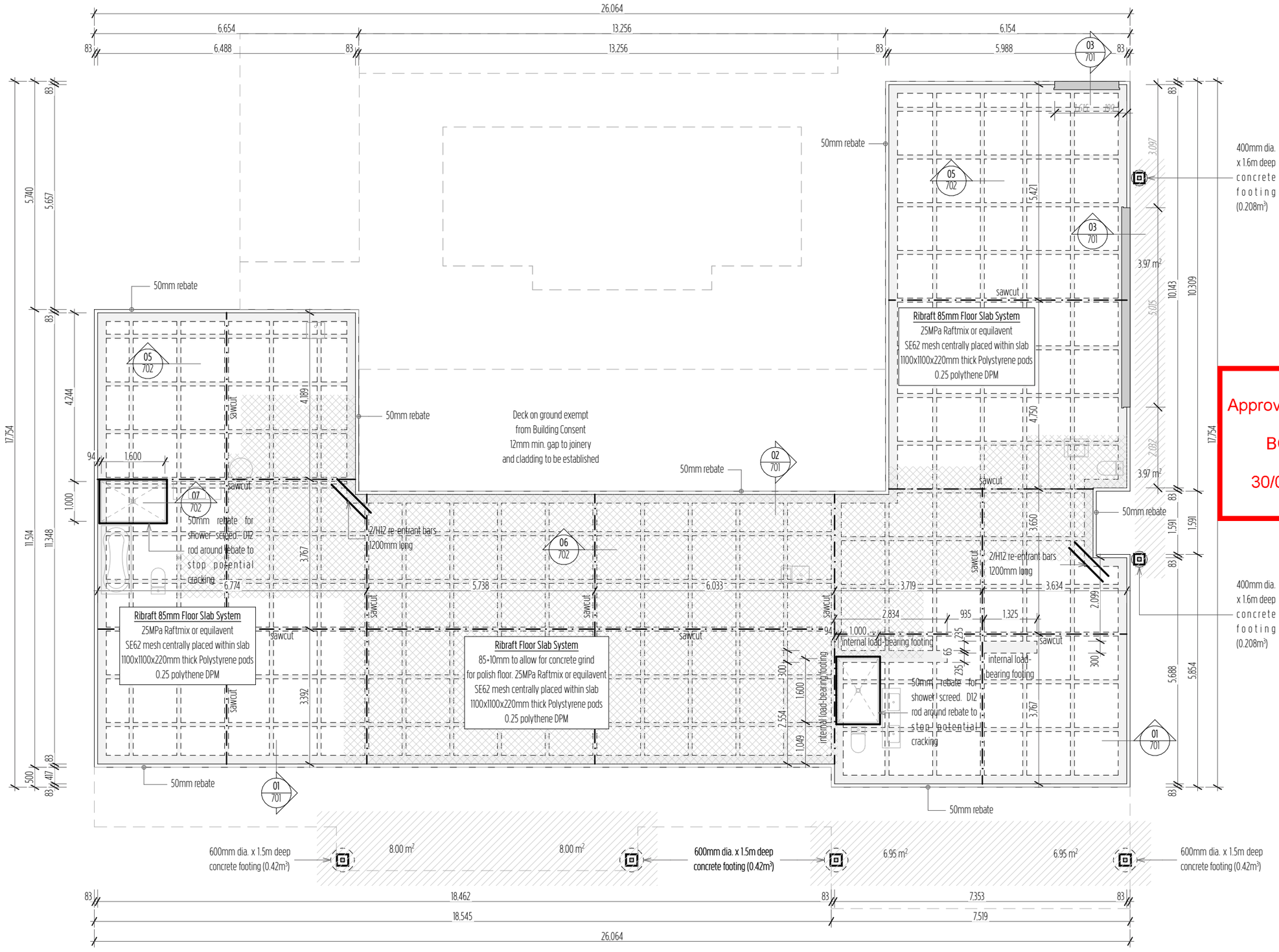

Key/Notes

Refer to the Geotechnical Investigation reference 21076 by Wiley Geotechnical Ltd. dated 17 August 2021 for specific site preparation details, bearing depth and capacity.

A minimum 300 mm layer of compacted hard fill is placed for a waffle slab (i.e Firth Rib- Raft) which can be placed on top. The gravel raft should extend a minimum of 1 m beyond the building footprint. All topsoil and fill material must be removed before foundation construction commences.

Underslab hard fill comprising GAP40/GAP65, or an equivalent approved product, should be placed across the building platform in 100 mm lifts and compacted using appropriate compaction plant (e.g. a hand held or excavator mounted vibrating compaction plate), and brought up to the finished design levels. It is recommended that a high quality gravel without too many fines is used.

For fills greater than 0.6 m. Every third layer of hard fill lift should be observed and tested by WGL to confirm that it has been placed to an appropriate specification. At this stage it is anticipated that compaction should be to achieve 95% of the maximum dry density (MDD) of the material, to be confirmed onsite using either a NDM (nuclear densometer) or Impact Hammer testing (Target 15 CBR).

15

Kaipara District Council
Approved Building Consent Document
BC210441 - Pg 13 of 46
30/08/2021 ComplyNZ

Ground Floor Area over Framing
269.69 m²
Ground Floor Area over Cladding
277.25 m²

COASTAL HOMES

Project Title
ACDL Trustee Ltd. D&L Kendall

Site Address
Lot 81 The Sanctuary, Mangawhai

Drawing Issue
Building Consent

Sheet Title
Foundation Plan

Scale	Drawn
1:100, 1:1 @ A3	Marc R. Vale
Date	Checked
18/08/21	CADetailer Ltd.
Drawing no.	Revision
501	03

All dimensions to be verified on site before commencing any work or producing shop drawings. Do not scale.
The copyright of this drawing remains with CH Northland Ltd and CADetailer Ltd.

RevID	ChID	Change Name	Date
01			14/05/21
02	01	Building Consent	27/06/21
03	15	Site preparation	18/08/21

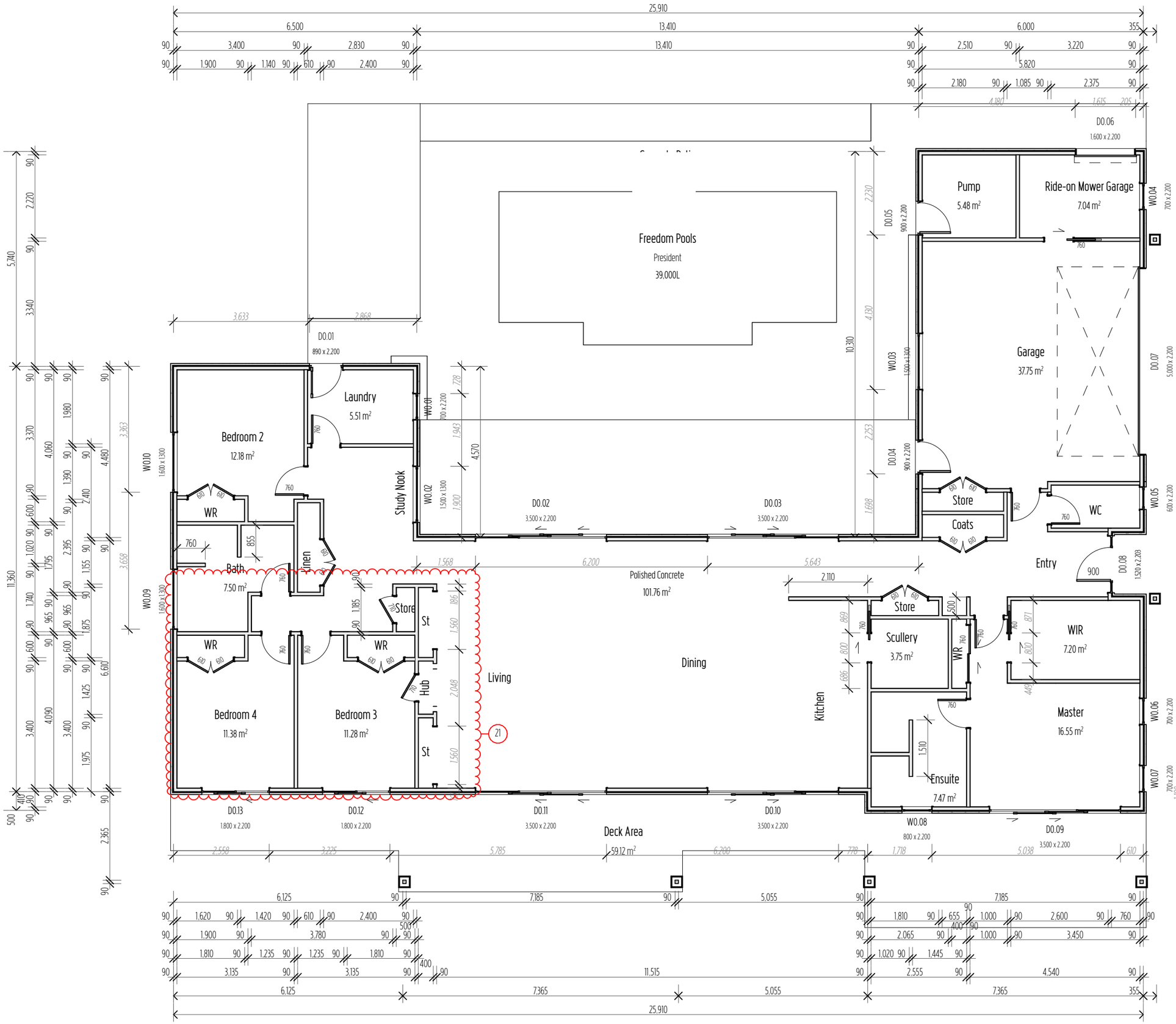

Key/Notes

Trimming Studs shall be sized in accordance with NZS 3604:2001 Table 8.5

Fix bottom plate with M12 through bolts @ 600crs & 150mm from ends. 120mm min.
embedment into header block

Center all internal doors unless dimensioned otherwise

Kaipara District Council
Approved Building Consent Document
BC210441 - Pg 14 of 46
30/08/2021 ComplyNZ

Ground Floor Area over Framing
269.69 m²
Ground Floor Area over Cladding
277.25 m²

COASTAL HOMES

Project Title
ACDL Trustee Ltd. D&L Kendall

Site Address
Lot 81 The Sanctuary, Mangawhai

Drawing Issue
Building Consent

Sheet Title
Dimension Plan

Scale	Drawn
1:100 @ A3	Marc R. Vale
Date	Checked
25/08/21	CADetailer Ltd.
Drawing no.	Revision
502	03

All dimensions to be verified on site before commencing any work or producing shop drawings. Do not scale.
The copyright of this drawing remains with CH Northland Ltd and CADetailer Ltd.

RevID	ChID	Change Name	Date
01			14/05/21
02	01	Building Consent	27/06/21
03	21	Lounge wall moved closer	25/08/21

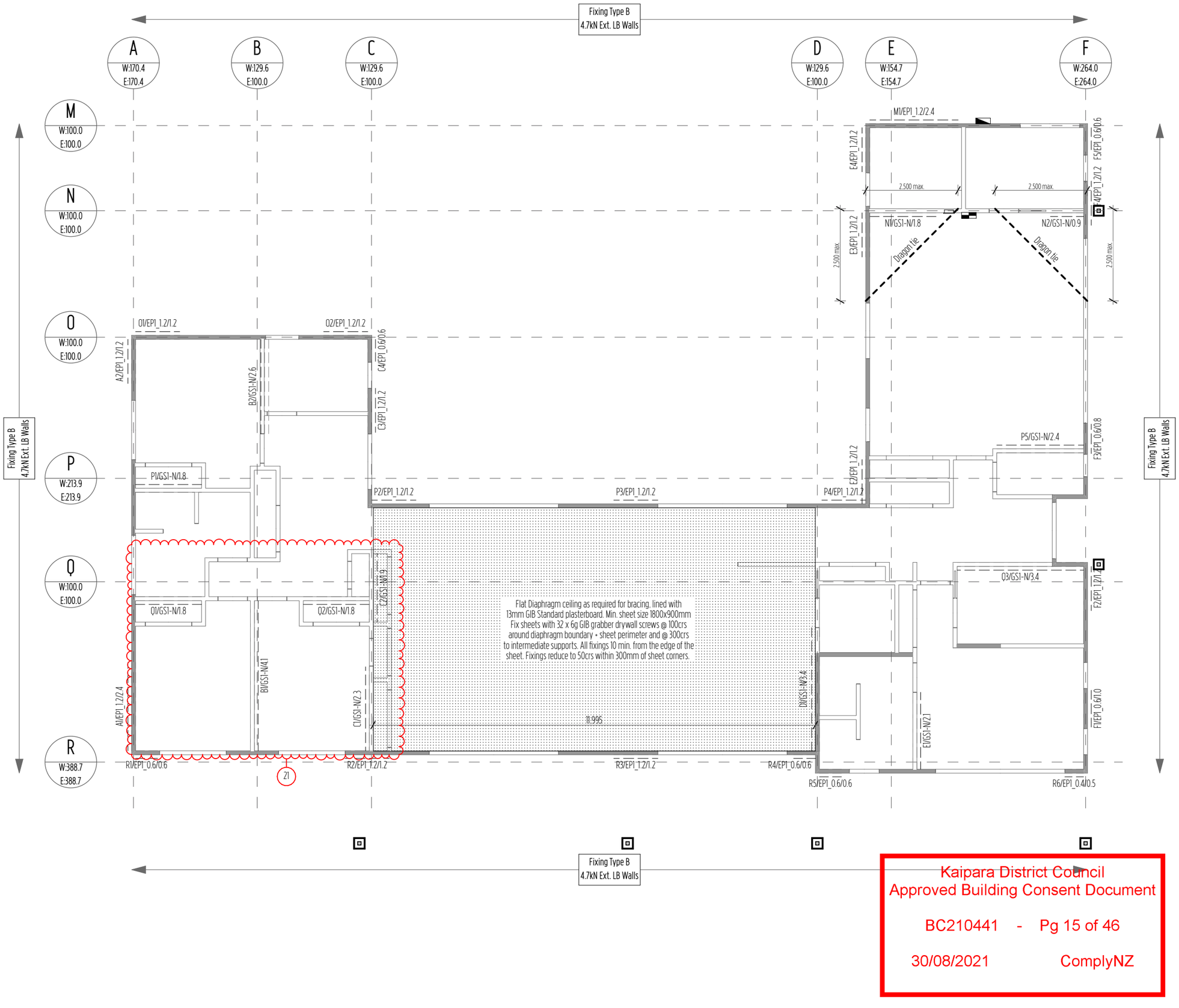

Kaipara District Council
Approved Building Consent Document

BC210441 - Pg 15 of 46

30/08/2021 ComplyNZ

Key/Notes

Load-bearing wall

Non-Load bearing wall

Stud to Top Plate fixing as per MiTek Structural fixings on-site Guide page 88 as an alternative to NZS3604:2011 table 8.18

Lintel fixing as per MiTek Structural fixings on-site Guide page 73 as an alternative to NZS3604:2011 table 8.14 & figure 8.12

All bracing elements shall be installed and fixed as per the manufacturers recommendations.

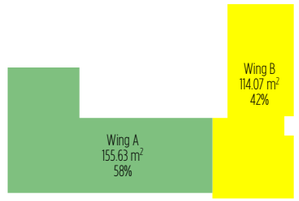

Bracing Wing Key

Bracing Wings representing % of overall building as per GIB Bracing Supplement Document Issue Date December 2016.

Wing A - 58% of Demand
Wing Along = 988 x 58% = 573.04BU's - 1275BU's achieved ✓
Wing Across = 1530 x 58% = 887.40BU's - 1525BU's achieved ✓
Earthquake Along & Across = 807 x 58% = 468.06BU's - 1366 & 1476BU's achieved ✓

Wing B - 42% of Demand
Wing Along = 988 x 42% = 414.96BU's - 1039BU's achieved ✓
Wing Across = 1530 x 42% = 642.60BU's - 1031BU's achieved ✓
Earthquake Along & Across = 807 x 42% = 338.94BU's - 1035 & 1116BU's achieved ✓

COASTAL HOMES

Project Title
ACDL Trustee Ltd. D&L Kendall

Site Address
Lot 81 The Sanctuary, Mangawhai

Drawing Issue
Building Consent

Sheet Title
Bracing + Fixing Plan

Scale	Drawn
1:100 @ A3	Marc R. Vale
Date	Checked
25/08/21	CADetailer Ltd.
Drawing no.	Revision
503	04

All dimensions to be verified on site before commencing any work or producing shop drawings. Do not scale.
The copyright of this drawing remains with CH Northland Ltd and CADetailer Ltd.

RevID	ChID	Change Name	Date
02	01	Building Consent	27/06/21
03	11	Diaphragm length	18/08/21
	12	Bracing Wing percentages	
04	21	Lounge wall moved closer	25/08/21

A 401

B 402

C 403

Total Roof Plan Area - 405.45 m²

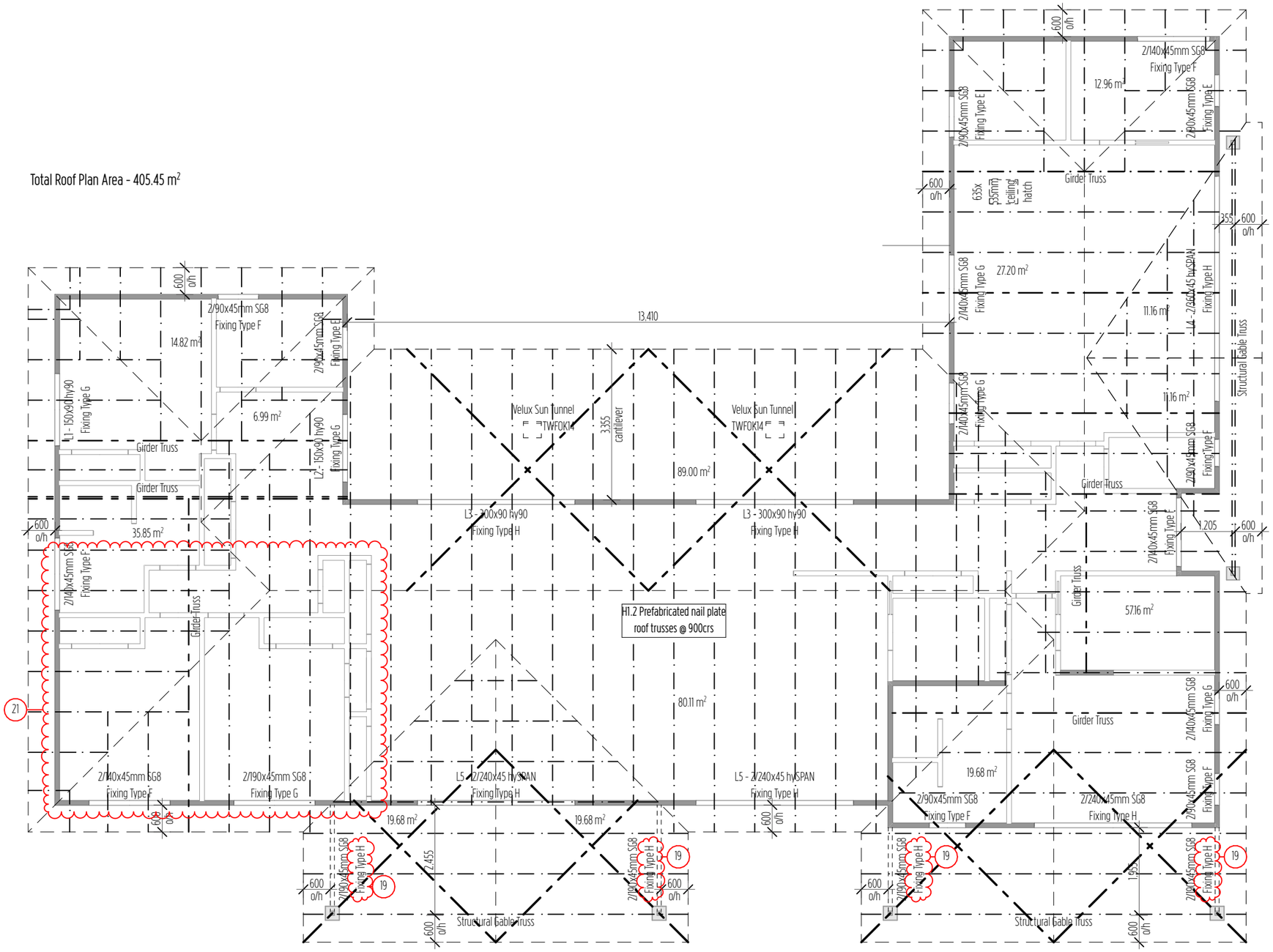

Key/Notes

- Load-bearing wall
- Non-Load bearing wall
- Roof plane Brace - pair of tensioned and crossed LUMBERLOK Strip Brace running continuously from ridge to top plate

Roof bracing as per NZS3604:2011 sections 10.3 & 10.4. 1 brace per 50m2 for light roof

Lintel and beam sizes as per NZS3604:2011 table 8.9 & designIT calculations

Kaipara District Council
Approved Building Consent Document

BC210441 - Pg 16 of 46

30/08/2021 ComplyNZ

COASTAL HOMES

Project Title

ACDL Trustee Ltd. D&L Kendall

Site Address

Lot 81 The Sanctuary, Mangawhai

Drawing Issue

Building Consent

Sheet Title

Roof Framing Plan

Scale	Drawn
1:100, 1:1 @ A3	Marc R. Vale
Date	Checked
25/08/21	CADetailer Ltd.
Drawing no.	Revision
504	04

All dimensions to be verified on site before commencing any work or producing shop drawings. Do not scale.
The copyright of this drawing remains with CH Northland Ltd and CADetailer Ltd.

RevID	ChID	Change Name	Date
02	01	Building Consent	27/06/21
03	05	Skylights added	18/08/21
04	19	Post uplift	25/08/21
	21	Lounge wall moved closer	

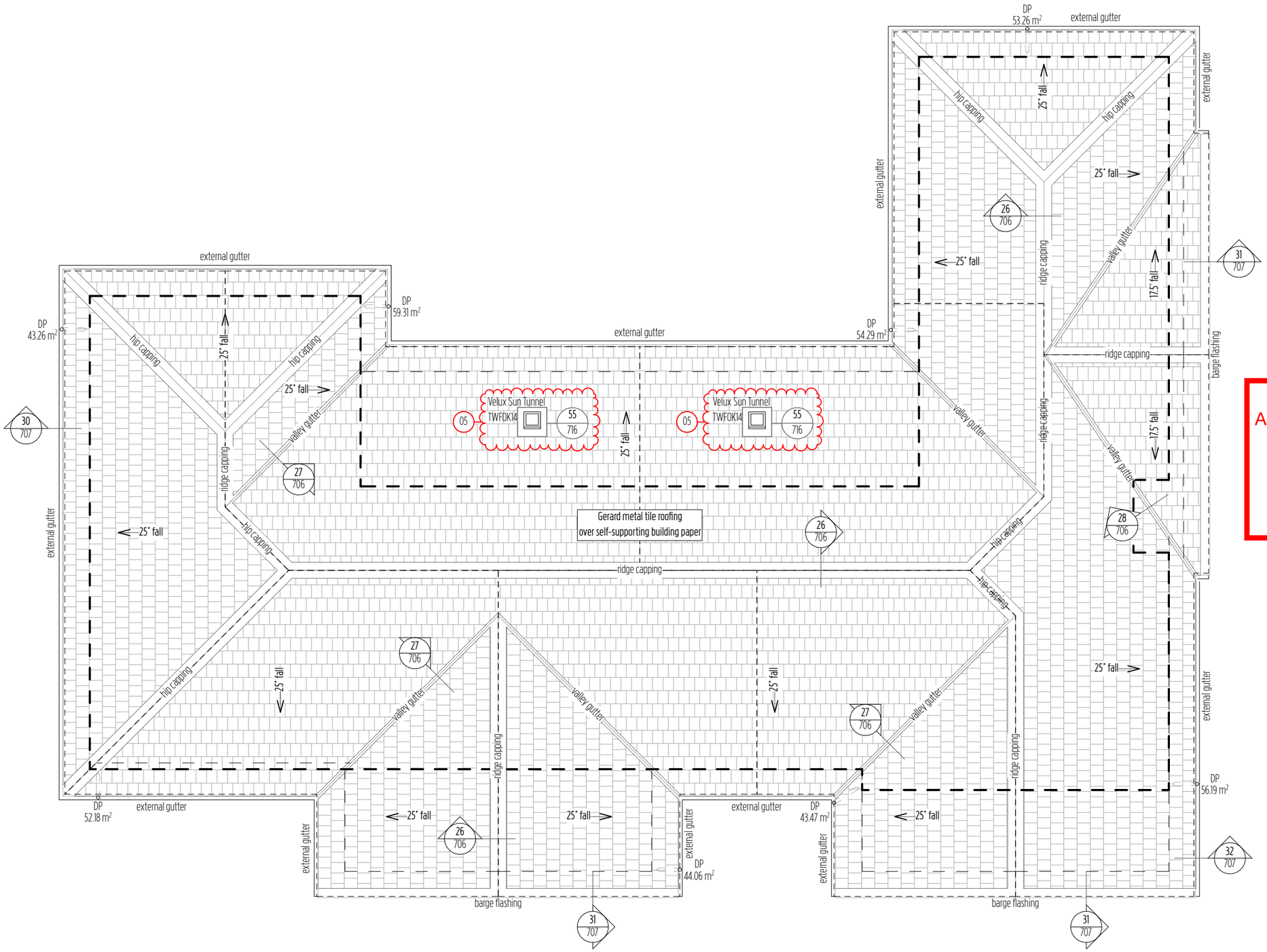

Key/Notes

	Building outline over framing
- - - - -	Roof plan catchment area
5º fall →	Roof pitch and direction of fall
DP	80Ø downpipe location
→	Direction of 1:100 gutter fall
8.51 m²	Roof plan area served by downpipe

Roof Catchment Area

Note: Catchment areas exclusive of external gutters.

External Gutter Calculations

Diamond 125 Box colorsteel gutter cross sectional area = 7500mm².
NZBC stipulates this size gutter services 67m² maximum of plan roof area ÷
80mm Ø downpipe services 70m²

All roof flashings are to E2/AS1

Kaipara District Council
Approved Building Consent Document
BC210441 - Pg 17 of 46
30/08/2021 ComplyNZ

COASTAL HOMES

Project Title
ACDL Trustee Ltd. D&L Kendall

Site Address
Lot 81 The Sanctuary, Mangawhai

Drawing Issue
Building Consent

Sheet Title
Roofing Plan

Scale	Drawn
1:100 @ A3	Marc R. Vale
Date	Checked
18/08/21	CADetailer Ltd.
Drawing no.	Revision
505	03

All dimensions to be verified on site before commencing any work or producing shop drawings. Do not scale.
The copyright of this drawing remains with CH Northland Ltd and CADetailer Ltd.

RevID	ChID	Change Name	Date
01			14/05/21
02	01	Building Consent	27/06/21
03	05	Skylights added	18/08/21

Key/Notes

- Flat 13mm GIB Standard Ceiling
- Flat 13mm GIB Aqualine ceiling
- Flat 4.5mm JH Hardieflex soffit

Square stop to ceiling/wall junction

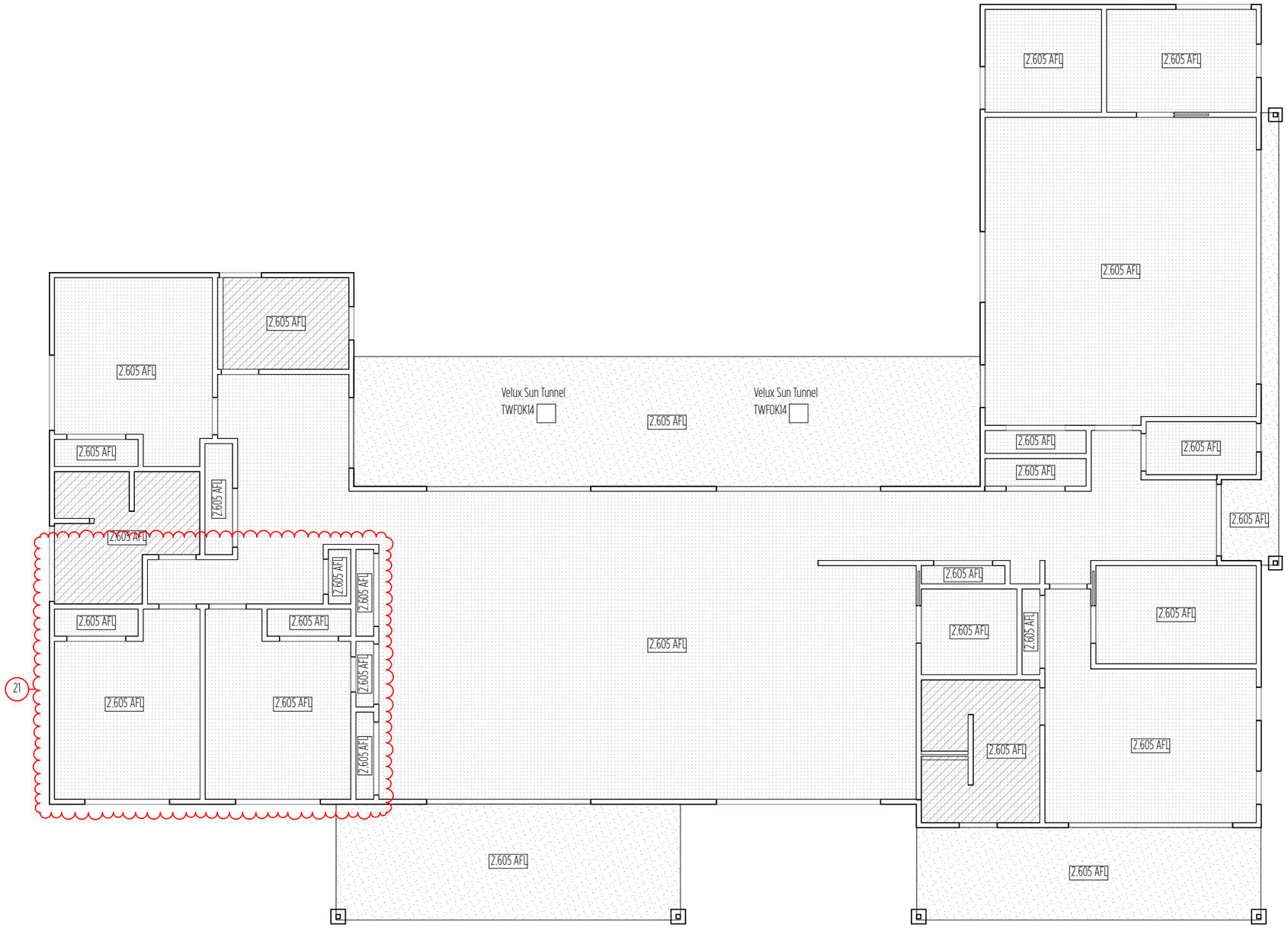

Kaipara District Council
Approved Building Consent Document
BC210441 - Pg 18 of 46
30/08/2021 ComplyNZ

COASTAL HOMES

Project Title

ACDL Trustee Ltd. D&L Kendall

Site Address

Lot 81 The Sanctuary, Mangawhai

Drawing Issue

Building Consent

Sheet Title

Reflected Ceiling Plan

Scale	Drawn
1:100 @ A3	Marc R. Vale
Date	Checked
25/08/21	CADetailer Ltd.
Drawing no.	Revision
506	04

All dimensions to be verified on site before commencing any work or producing shop drawings. Do not scale.
The copyright of this drawing remains with CH Northland Ltd and CADetailer Ltd.

RevID	ChID	Change Name	Date
01			14/05/21
02	01	Building Consent	27/06/21
03	05	Skylights added	18/08/21
04	21	Lounge wall moved closer	25/08/21

Key/Notes

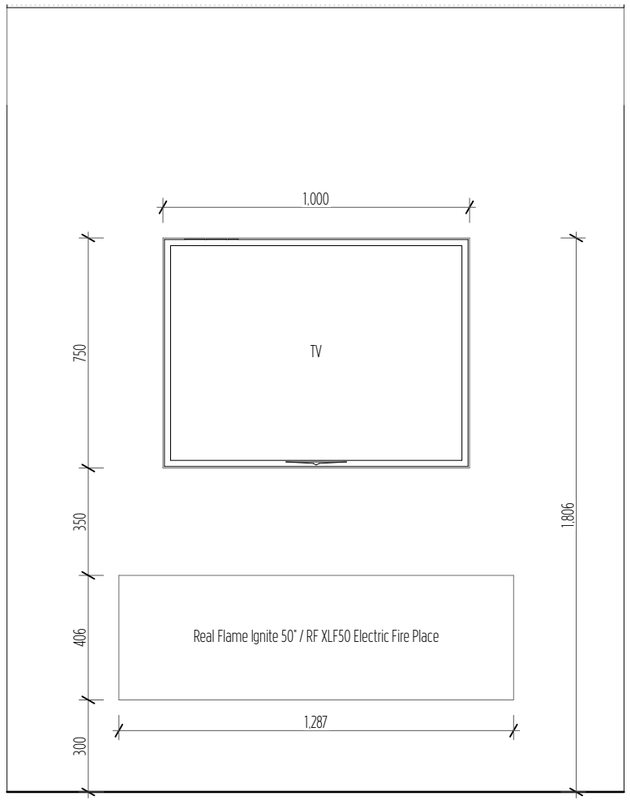

IE-01
201

Living Elevation

Scale 1:20

Kaipara District Council
Approved Building Consent Document

BC210441 - Pg 19 of 46

30/08/2021 ComplyNZ

COASTAL HOMES

Project Title

ACDL Trustee Ltd. D&L Kendall

Site Address

Lot 81 The Sanctuary, Mangawhai

Drawing Issue

Building Consent

Sheet Title

Interior Elevation

Scale	Drawn
1:20 @ A3	Marc R. Vale
Date	Checked
27/06/21	CADetailer Ltd.
Drawing no.	Revision
507	01

All dimensions to be verified on site before commencing any work or producing shop drawings. Do not scale.
The copyright of this drawing remains with CH Northland Ltd and CADetailer Ltd.

RevID	ChID	Change Name	Date
01			27/06/21

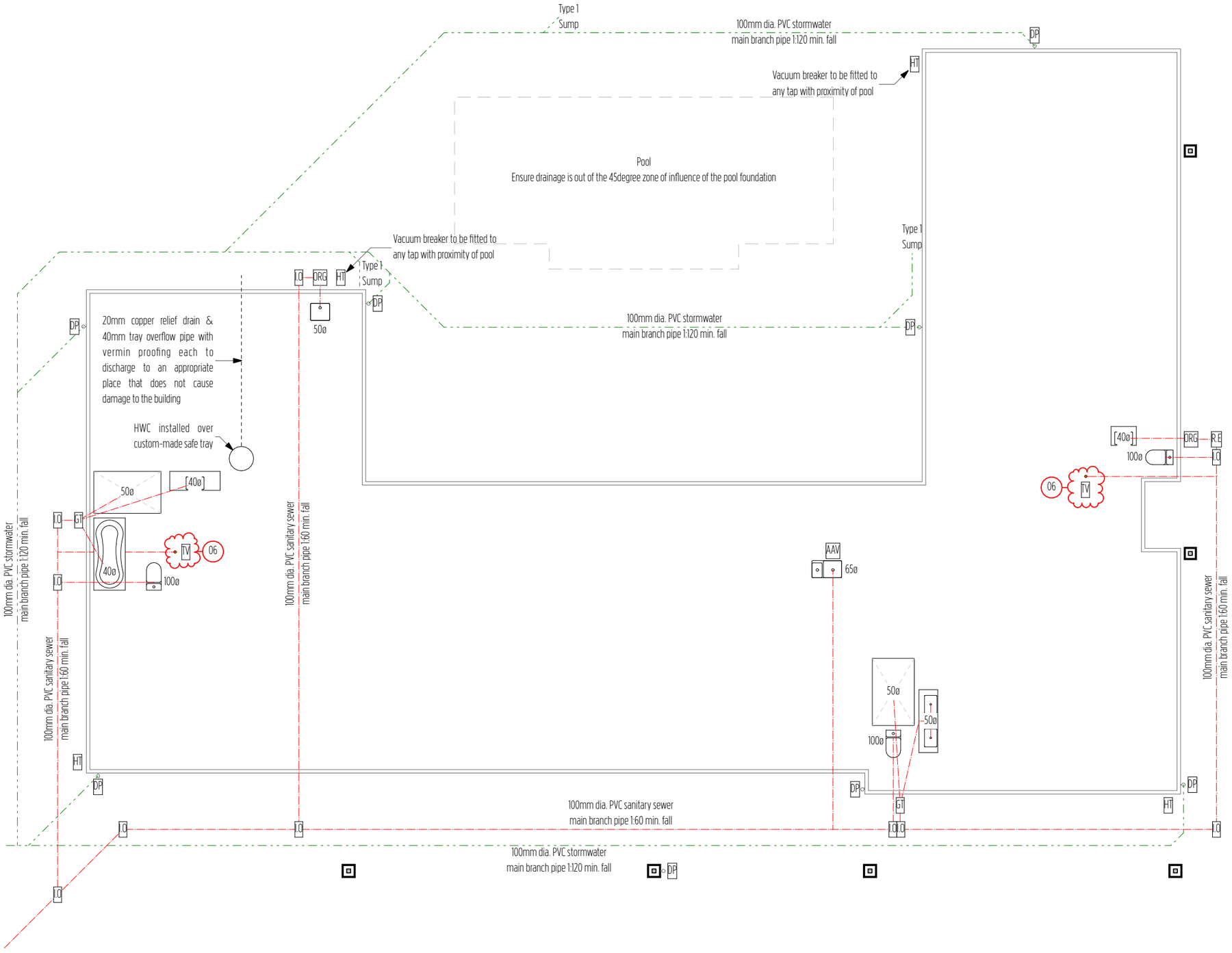

Key/Notes

RE	Rodding Eye
IO	Inspection Point
AAV	Air Admittance Valve
DRG	Overflow Relief Gully
DG	Disconnector Gully
TV	Terminal Vent
FV	Fixture Vent
SV	Stack Vent
- - -	uPVC Sanitary Sewer Pipe
DP	Downpipe
- - -	100mm uPVC Stormwater Pipe
HT	Hosetap

Key/Notes

Carry out all sanitary sewer work and complete all tests to NZBC G1/AS1: 2.0, 3.0 and AS/NZS 3500.2, as modified by NZBC G13/AS3

1:40 for 65mm diameter and under
1:60 for 100mm diameter and under

Carry out all stormwater work and complete all tests to NZBC E1/AS1

1:120 for 100mm diameter and under

Lay uPVC pipe systems to relevant sections of AS/NZS 2032, NZS 2566.1 and AS/NZS 2566.2

All plumbing and drainage to be confirmed by contractor before commencement of works

A registered drainlayer/plumber is to provide an as-built layout to council

Drains installed under buildings shall be:
a) Straight and of even gradient,
b) Separated from the building foundation by at least 25 mm, and
c) When passing through concrete, sleeved or wrapped in a durable and flexible material to allow for expansion and contraction.

Drains passing beneath buildings with a concrete slab on the ground floor shall have in addition to Paragraph 5.8.1:
a) 50 mm clearance from the top of the pipe to the underside of the slab, and
b) Junctions beneath the building joining at an angle of not more than 45°

Kaipara District Council
Approved Building Consent Document

BC210441 - Pg 20 of 46

30/08/2021 ComplyNZ

COASTAL HOMES

Project Title

ACDL Trustee Ltd. D&L Kendall

Site Address

Lot 81 The Sanctuary, Mangawhai

Drawing Issue

Building Consent

Sheet Title

Plumbing and Drainage Plan

Scale	Drawn
1:100 @ A3	Marc R. Vale
Date	Checked
18/08/21	CADetailer Ltd.
Drawing no.	Revision
601	03

All dimensions to be verified on site before commencing any work or producing shop drawings. Do not scale.
The copyright of this drawing remains with CH Northland Ltd and CADetailer Ltd.

RevID	ChID	Change Name	Date
01			14/05/21
02	01	Building Consent	27/06/21
03	06	Terminal vents	18/08/21

Key/Notes

SD Type 1 Domestic smoke alarm to NZBC F7/AS1

3.0m smoke alarm radius

Mechanical Ventilation to NZS 4303:1990

All electrical work to be confirmed by client before commencement of works

Kaipara District Council
Approved Building Consent Document

BC210441 - Pg 21 of 46

30/08/2021 ComplyNZ

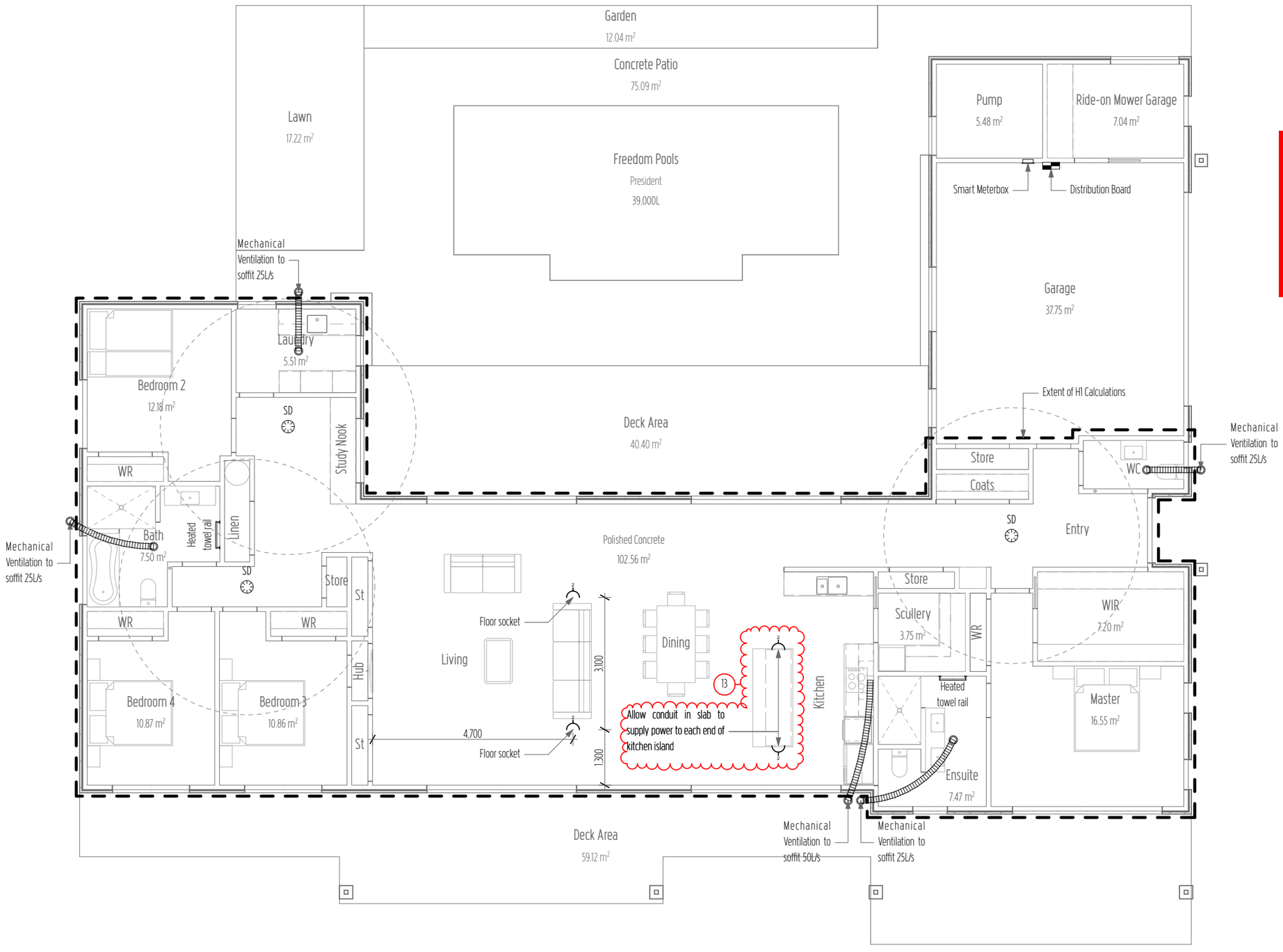

COASTAL HOMES

Project Title

ACDL Trustee Ltd. D&L Kendall

Site Address

Lot 81 The Sanctuary, Mangawhai

Drawing Issue

Building Consent

Sheet Title

Electrical & Ventilation Plan

Scale	Drawn
1:100 @ A3	Marc R. Vale
Date	Checked
18/08/21	CADetailer Ltd.
Drawing no.	Revision
602	03

All dimensions to be verified on site before commencing any work or producing shop drawings. Do not scale.
The copyright of this drawing remains with CH Northland Ltd and CADetailer Ltd.

RevID	ChID	Change Name	Date
01			14/05/21
02	01	Building Consent	27/06/21
03	13	Island bench powerpoints	18/08/21

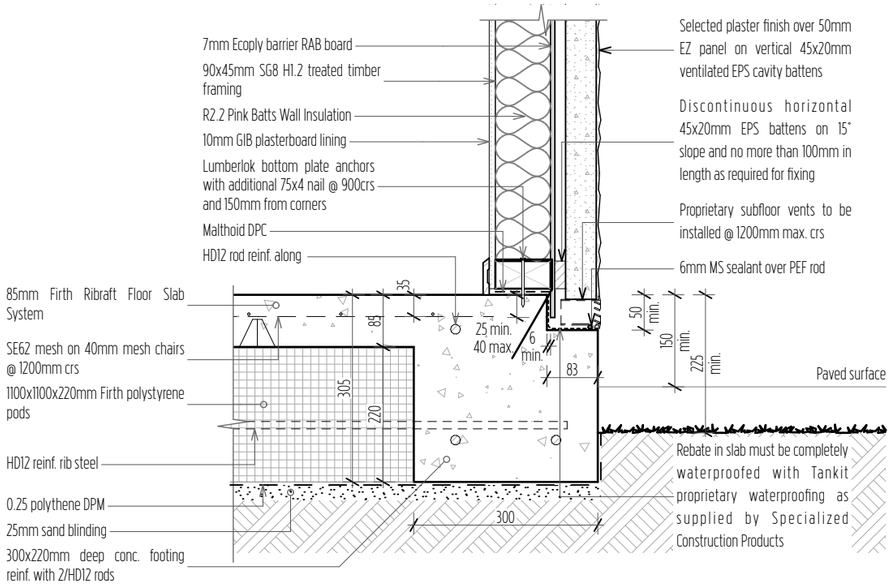

01 Ribraft Edge Beam - EZpanel

Scale 1:10

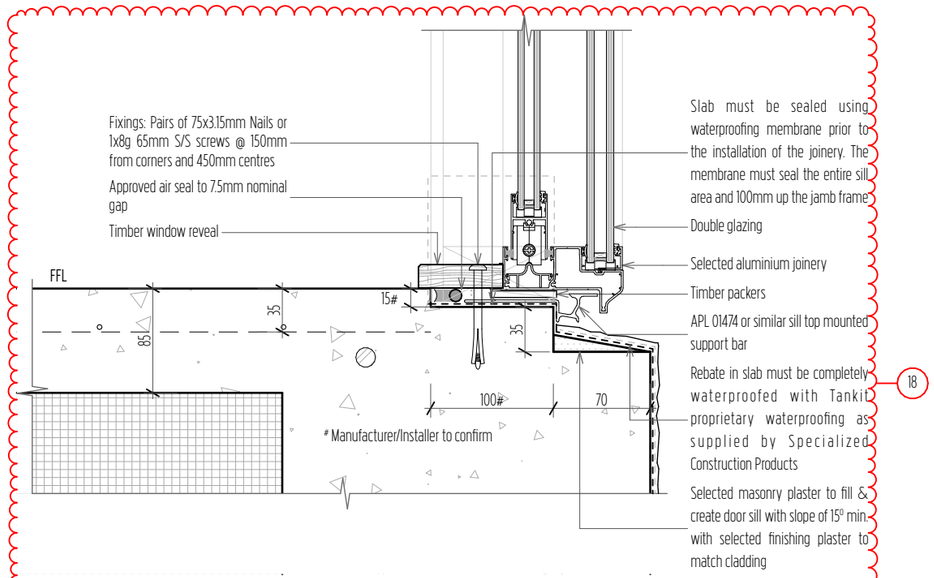

18

02 Joinery Sill Rebate - EZpanel

Scale 1:5

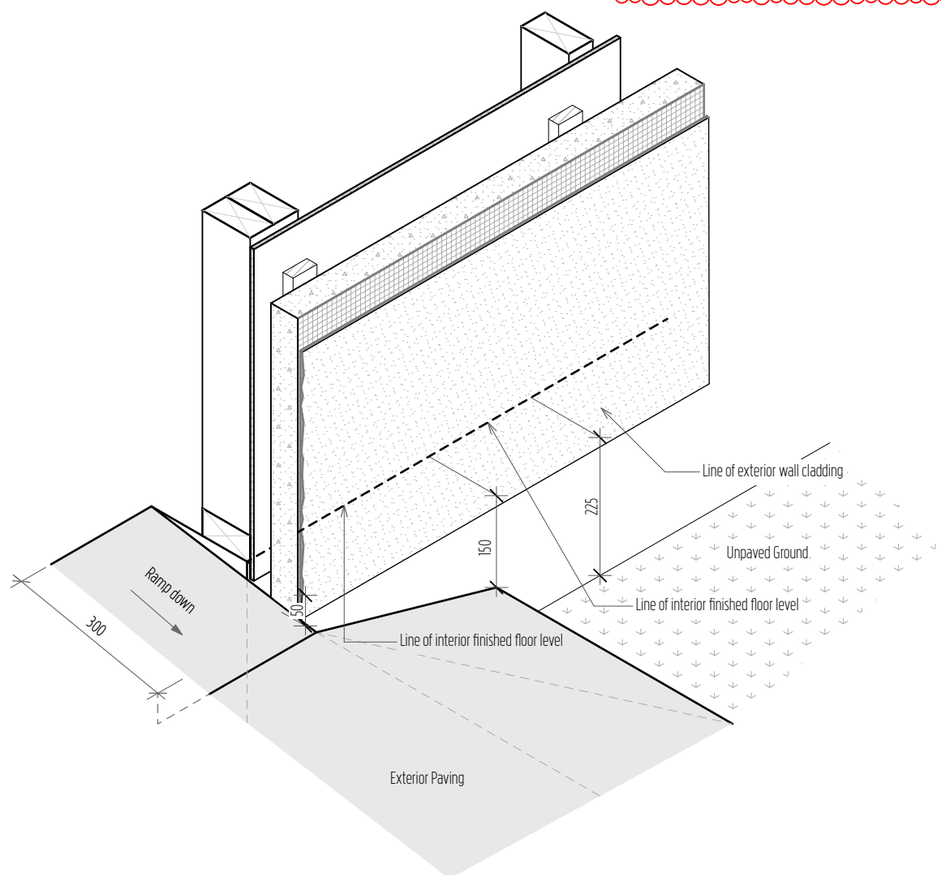

03 Garage Door Threshold - EZpanel

Scale 1:10

Key/Notes

Refer to the Geotechnical Investigation reference 21076 by Wiley Geotechnical Ltd. dated 27 May 2021 for specific site preparation details, bearing depth and capacity.

A minimum 200 mm layer of compacted hard fill is recommended to be placed for a waffle slab (i.e Rib-Raft) with the foundation being designed for expansive site class 'M – Moderate', as per AS 2870. All topsoil and fill material must be removed before foundation construction commences.

Kaipara District Council
Approved Building Consent Document

BC210441 - Pg 22 of 46

30/08/2021 ComplyNZ

COASTAL HOMES

Project Title

ACDL Trustee Ltd. D&L Kendall

Site Address

Lot 81 The Sanctuary, Mangawhai

Drawing Issue

Building Consent

Sheet Title

Details - Foundation

Scale	Drawn
1:10, 1:5 @ A3	Marc R. Vale
Date	Checked
25/08/21	CADetailer Ltd.
Drawing no.	Revision
701	02

All dimensions to be verified on site before commencing any work or producing shop drawings. Do not scale.
The copyright of this drawing remains with CH Northland Ltd and CADetailer Ltd.

RevID	ChID	Change Name	Date
01			27/06/21
02	18	Joinery Sill update	25/08/21

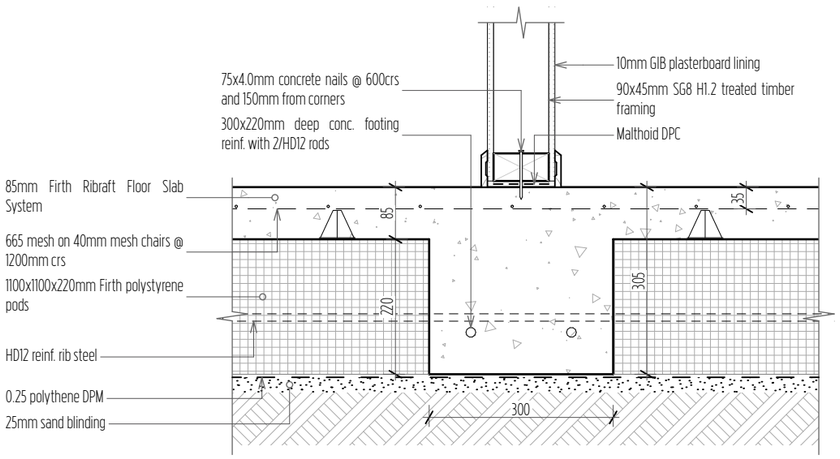

04 Internal Load-bearing Footing

Scale 1:10

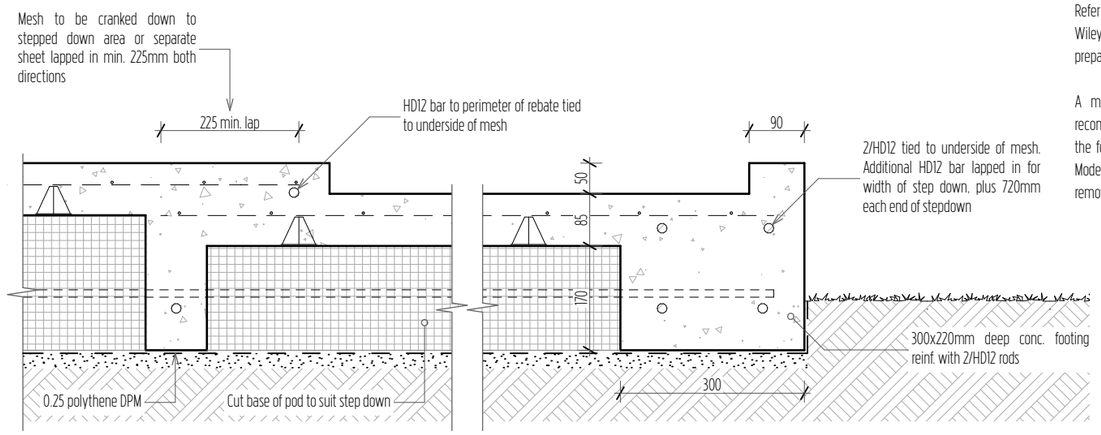

07 Shower Rebate

Scale 1:10

Key/Notes

Refer to the Geotechnical Investigation reference 21076 by Wiley Geotechnical Ltd. dated 27 May 2021 for specific site preparation details, bearing depth and capacity.

A minimum 200 mm layer of compacted hard fill is recommended to be placed for a waffle slab (i.e Rib-Raft) with the foundation being designed for expansive site class 'M – Moderate', as per AS 2870. All topsoil and fill material must be removed before foundation construction commences.

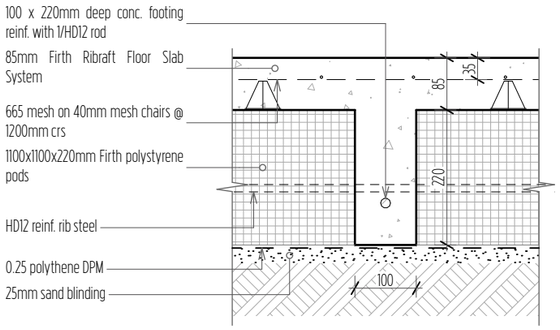

05 Internal Rib

Scale 1:10

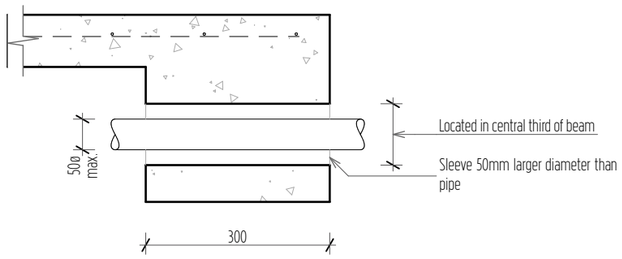

08 Horizontal Penetration through Edge Beam

Scale 1:10

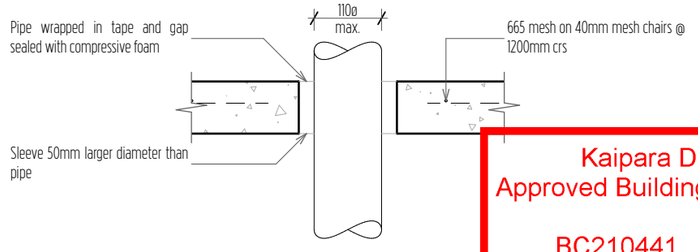

09 Small Vertical Penetration through Slab

Scale 1:10

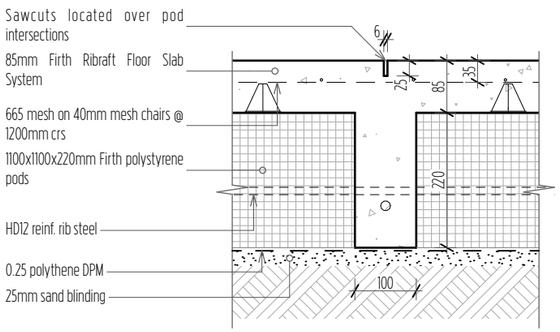

06 Sawcut

Scale 1:10

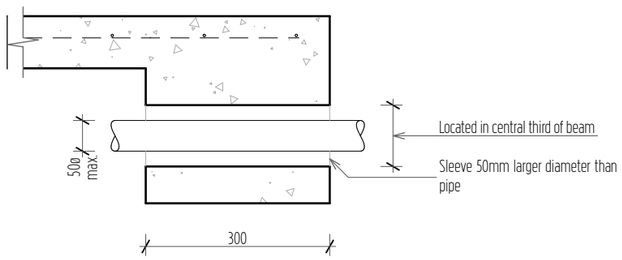

10 Vertical Penetration through Edge Beam

Scale 1:10

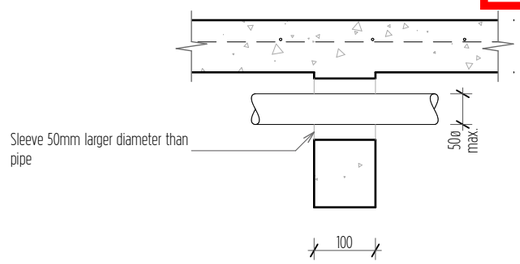

11 Horizontal Penetration through Pod Intersection

Scale 1:10



12 Large Vertical Penetration through Slab

Scale 1:10

Kaipara District Council
Approved Building Consent Document

BC210441 - Pg 23 of 46

30/08/2021 ComplyNZ

COASTAL HOMES

Project Title

ACDL Trustee Ltd. D&L Kendall

Site Address

Lot 81 The Sanctuary, Mangawhai

Drawing Issue

Building Consent

Sheet Title

Details - Foundation

Scale	Drawn
1:10 @ A3	Marc R. Vale
Date	Checked
27/06/21	CADetailer Ltd.
Drawing no.	Revision
702	01

All dimensions to be verified on site before commencing any work or producing shop drawings. Do not scale.
The copyright of this drawing remains with CH Northland Ltd and CADetailer Ltd.

RevID	ChID	Change Name	Date
01			27/06/21

Key/Notes

Refer to the Geotechnical Investigation reference 21076 by Wiley Geotechnical Ltd. dated 27 May 2021 for specific site preparation details, bearing depth and capacity.

A minimum 200 mm layer of compacted hard fill is recommended to be placed for a waffle slab (i.e Rib-Raft) with the foundation being designed for expansive site class 'M – Moderate', as per AS 2870. All topsoil and fill material must be removed before foundation construction commences.

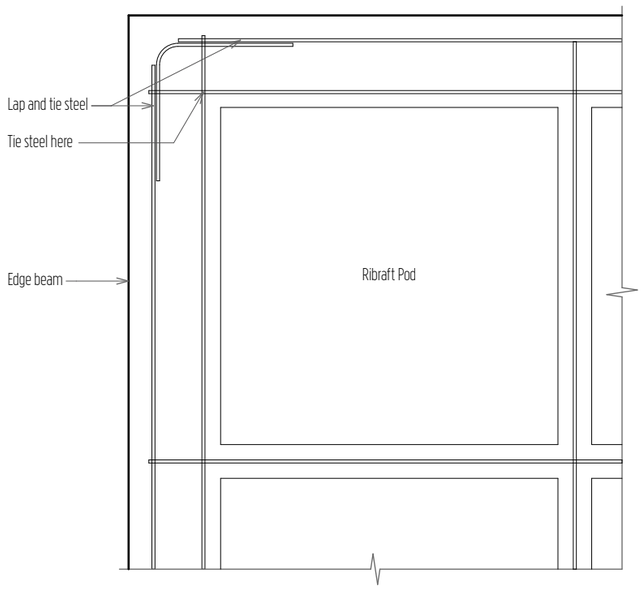

13 Re-Entrant Corner Steel

Scale 1:20

14 Vertical Penetration through Edge Beam (Plan)

Scale 1:20

Kaipara District Council
Approved Building Consent Document

BC210441 - Pg 24 of 46

30/08/2021 ComplyNZ

COASTAL HOMES

Project Title

ACDL Trustee Ltd. D&L Kendall

Site Address

Lot 81 The Sanctuary, Mangawhai

Drawing Issue

Building Consent

Sheet Title

Details - Foundation

Scale	Drawn
1:20 @ A3	Marc R. Vale
Date	Checked
27/06/21	CADetailer Ltd.
Drawing no.	Revision
703	01

All dimensions to be verified on site before commencing any work or producing shop drawings. Do not scale.
The copyright of this drawing remains with CH Northland Ltd and CADetailer Ltd.

RevID	ChID	Change Name	Date
01			27/06/21

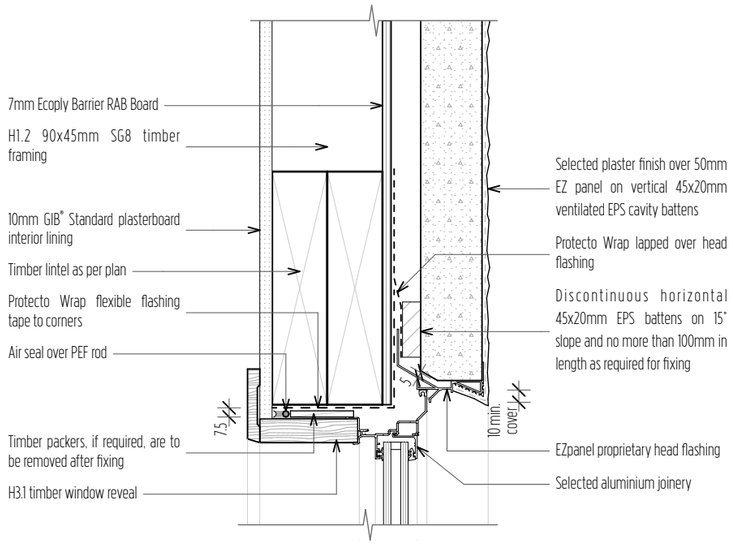

15 Window Head - EZpanel

Scale 1:5

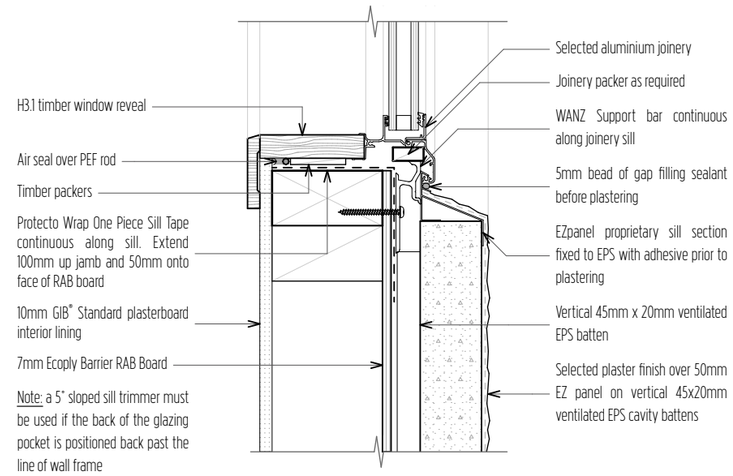

16 Window Sill - EZpanel

Scale 1:5

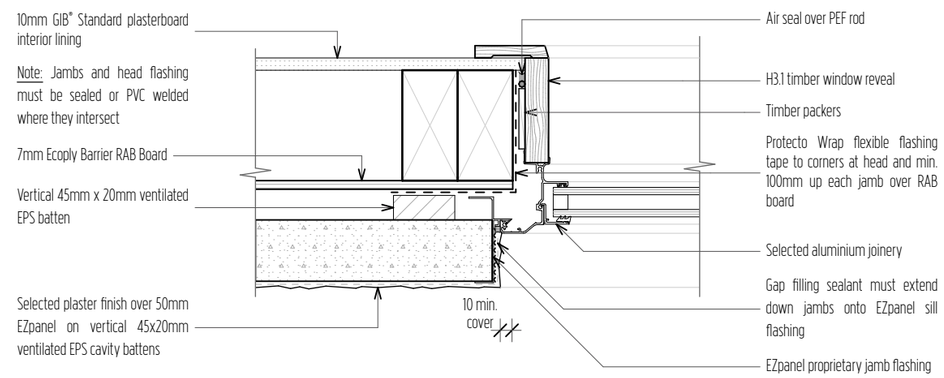

17 Window Jamb - EZpanel

Scale 1:5

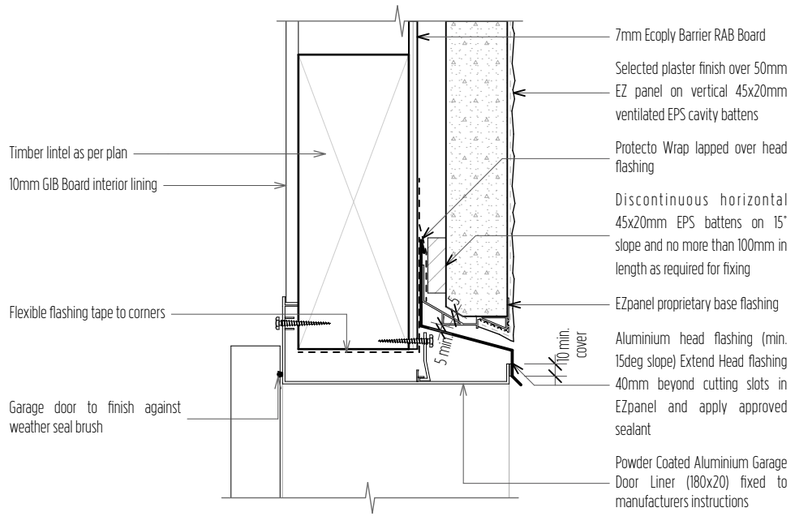

18 Garage Door Head - EZpanel

Scale 1:5

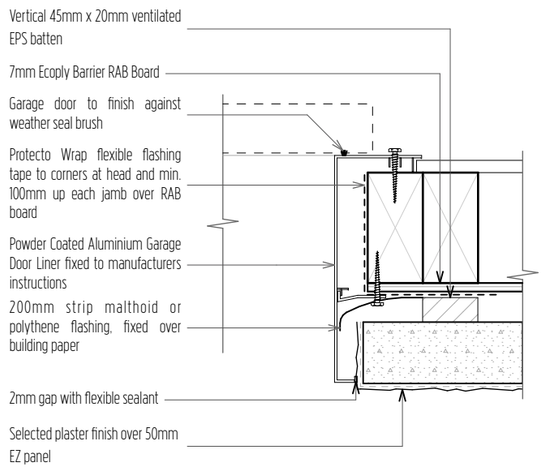

19 Garage Door Jamb - EZpanel

Scale 1:5

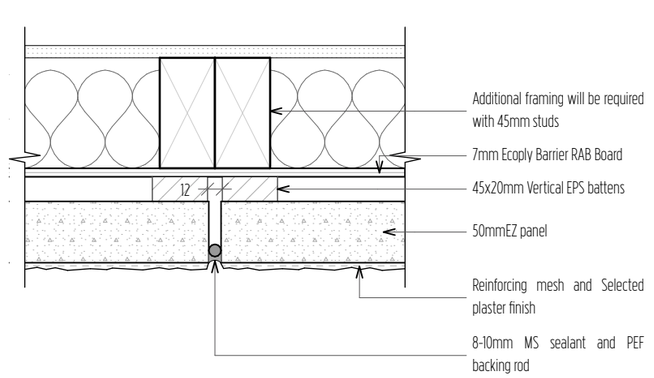

20 Vertical Control Joint - EZpanel

Scale 1:5

Kaipara District Council
Approved Building Consent Document
BC210441 - Pg 25 of 46
30/08/2021 ComplyNZ

COASTAL HOMES

Project Title
ACDL Trustee Ltd. D&L Kendall

Site Address
Lot 81 The Sanctuary, Mangawhai

Drawing Issue
Building Consent

Sheet Title
Details - Cladding

Scale	Drawn
1:5 @ A3	Marc R. Vale
Date	Checked
27/06/21	CADetailer Ltd.
Drawing no.	Revision
704	01

All dimensions to be verified on site before commencing any work or producing shop drawings. Do not scale.
The copyright of this drawing remains with CH Northland Ltd and CADetailer Ltd.

RevID	ChID	Change Name	Date
01			27/06/21

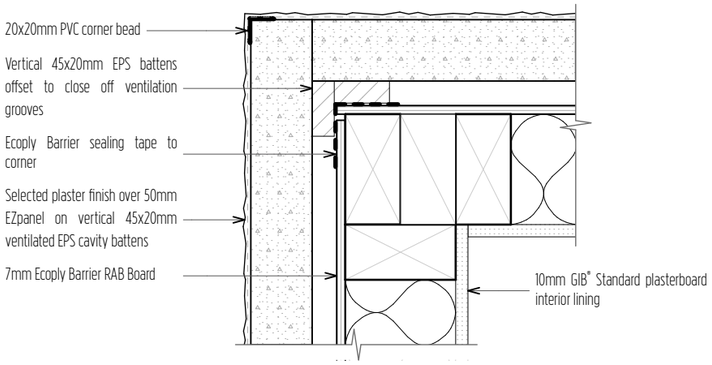

21 External Corner - EZpanel

Scale 1:5

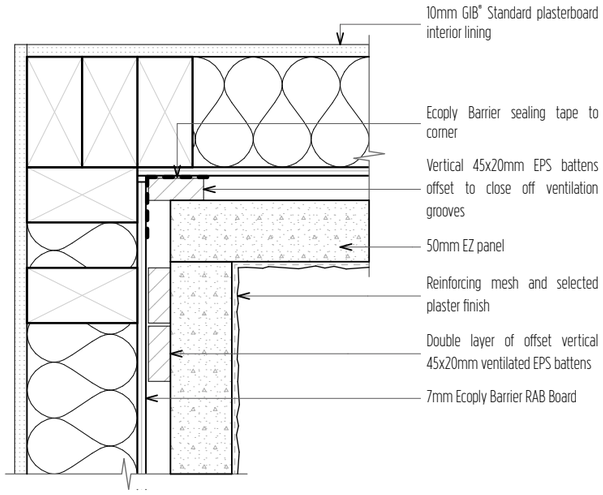

22 Internal Corner - EZpanel

Scale 1:5

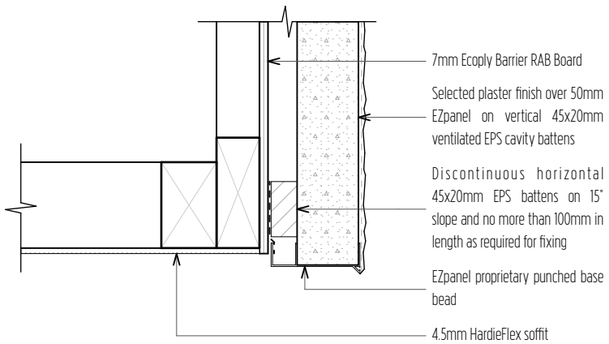

25 Soffit Overhang - EZpanel

Scale 1:5

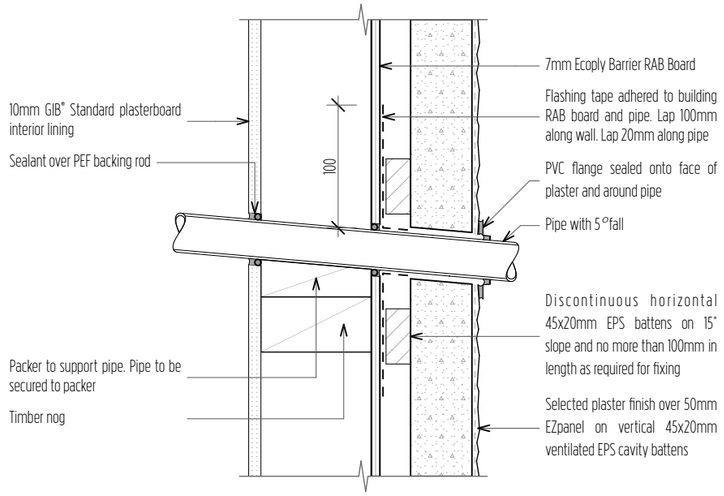

23 Pipe Penetration - EZpanel

Scale 1:5

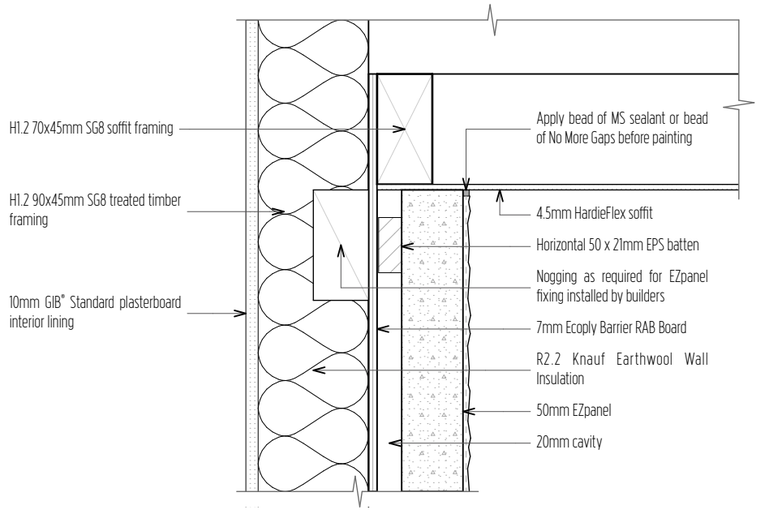

24 Flat Soffit Junction - EZpanel

Scale 1:5

Kaipara District Council
Approved Building Consent Document

BC210441 - Pg 26 of 46

30/08/2021 ComplyNZ

COASTAL HOMES

Project Title

ACDL Trustee Ltd. D&L Kendall

Site Address

Lot 81 The Sanctuary, Mangawhai

Drawing Issue

Building Consent

Sheet Title

Details - Cladding

Scale	Drawn
1:5 @ A3	Marc R. Vale
Date	Checked
27/06/21	CADetailer Ltd.
Drawing no.	Revision
705	01

All dimensions to be verified on site before commencing any work or producing shop drawings. Do not scale.
The copyright of this drawing remains with CH Northland Ltd and CADetailer Ltd.

RevID	ChID	Change Name	Date
01			27/06/21

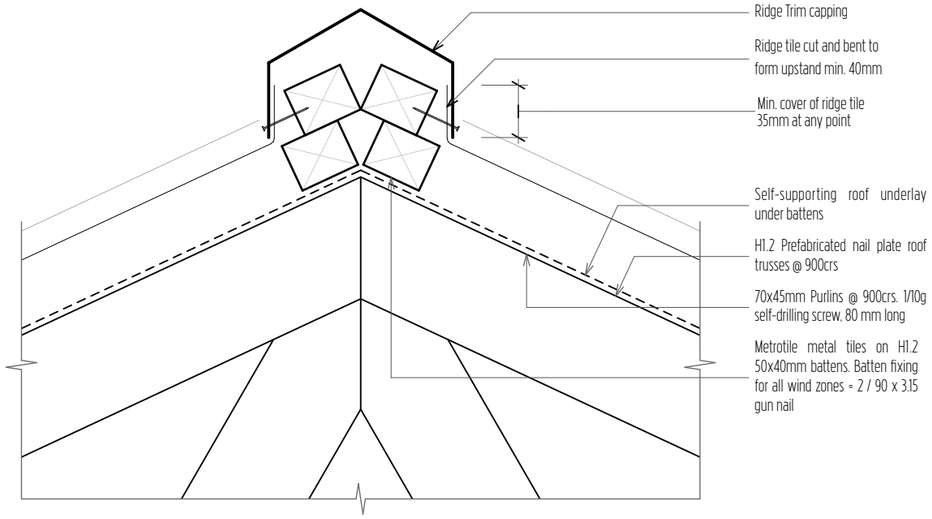

26 Truss Ridge Capping

Scale 1:5

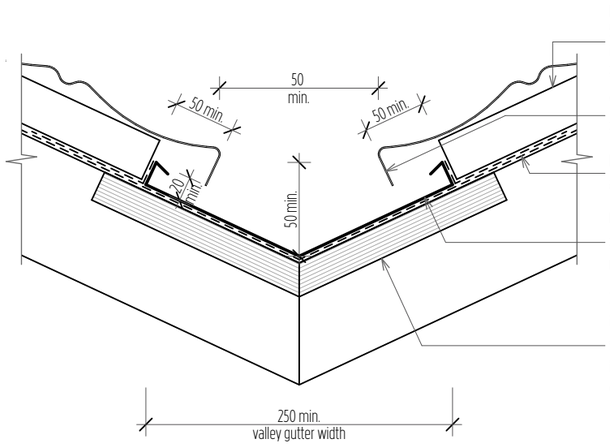

27 Valley Gutter

Scale 1:5

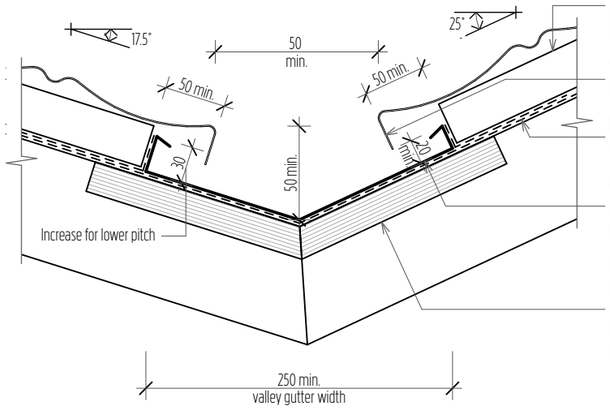

28 Valley Gutter - Varied Pitch

Scale 1:5

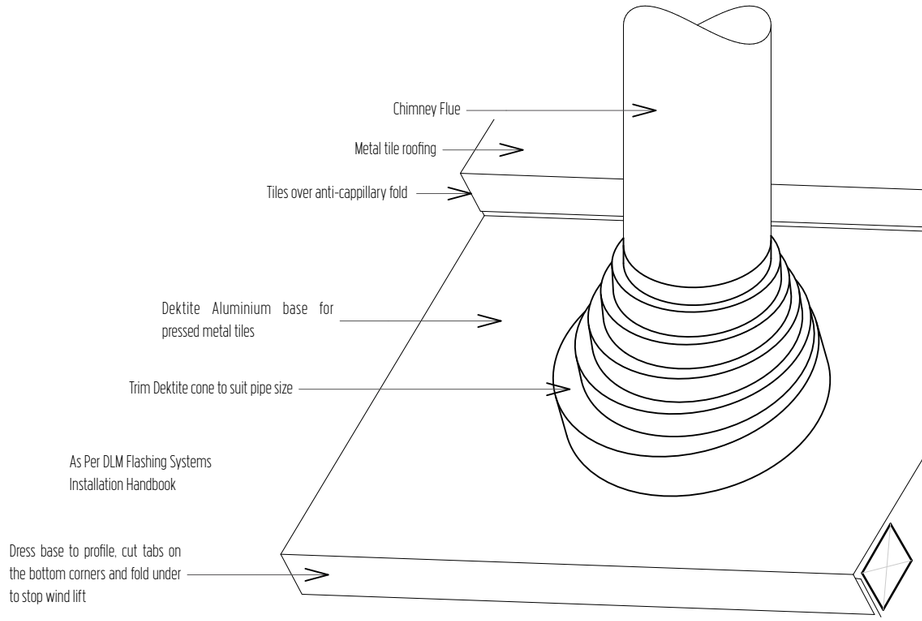

Code	Base (mm)	Pipe (mm)	Pitch
TFA 12 - 70	500 x 600	12 - 70	0 - 45 °
TFA 50 - 170	600 x 600	50 - 170	0 - 45 °
TFA 110 - 220	764 x 764	110 - 200	0 - 45 °
TFA 160 - 300	600 x 900	160 - 300	0 - 45 °
TFA 300 - 450	965 x 965	300 - 450	0 - 45 °

29 Roof Penetration

Scale 1:10

Kaipara District Council
Approved Building Consent Document
BC210441 - Pg 27 of 46
30/08/2021 ComplyNZ

COASTAL HOMES

Project Title

ACDL Trustee Ltd. D&L Kendall

Site Address

Lot 81 The Sanctuary, Mangawhai

Drawing Issue

Building Consent

Sheet Title

Details - Roofing

Scale	Drawn
1:5, 1:10 @ A3	Marc R. Vale
Date	Checked
27/06/21	CADetailer Ltd.
Drawing no.	Revision
706	01

All dimensions to be verified on site before commencing any work or producing shop drawings. Do not scale.
The copyright of this drawing remains with CH Northland Ltd and CADetailer Ltd.

RevID	ChID	Change Name	Date
01			27/06/21

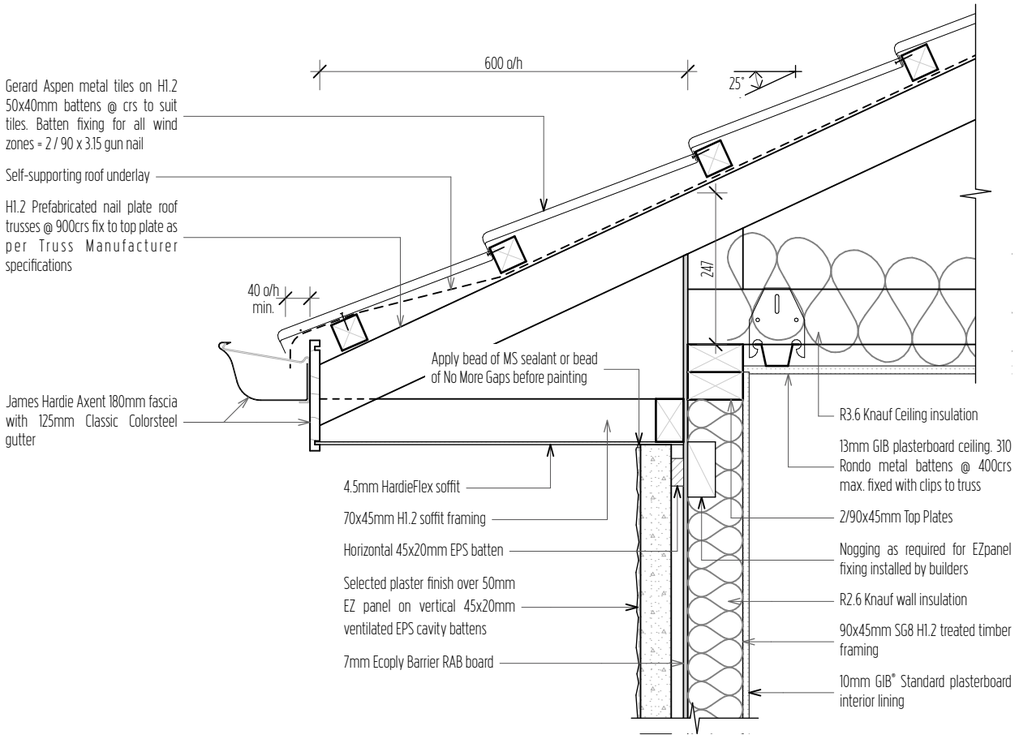

30 25deg. Metal Tile Heeled Eave - EZpanel

Scale 1:10

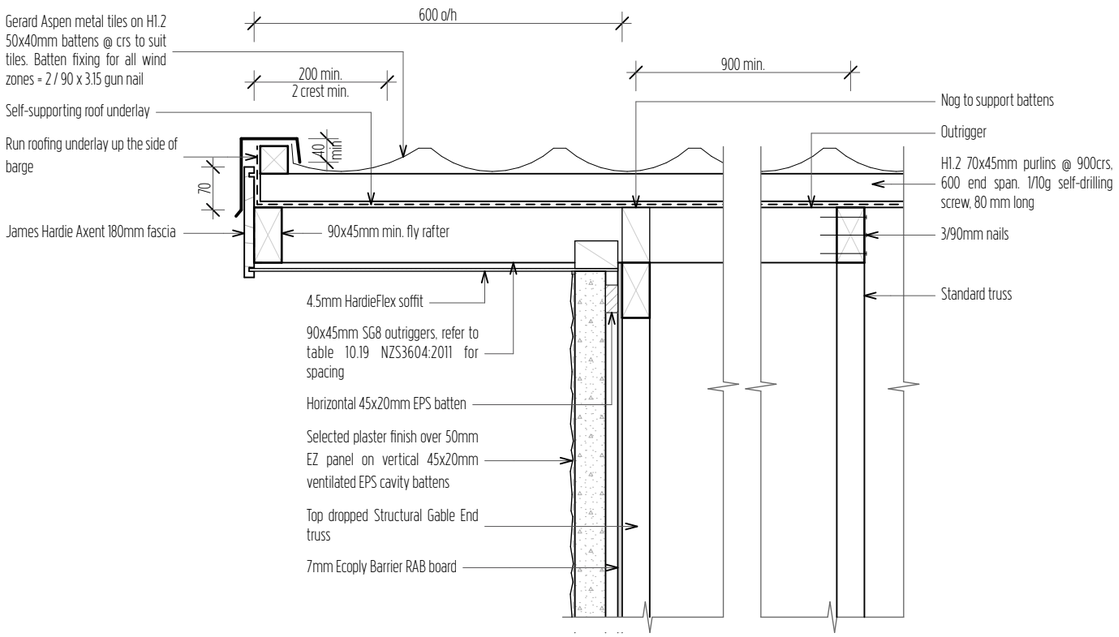

31 Metal Tile Truss Barge - EZpanel

Scale 1:10

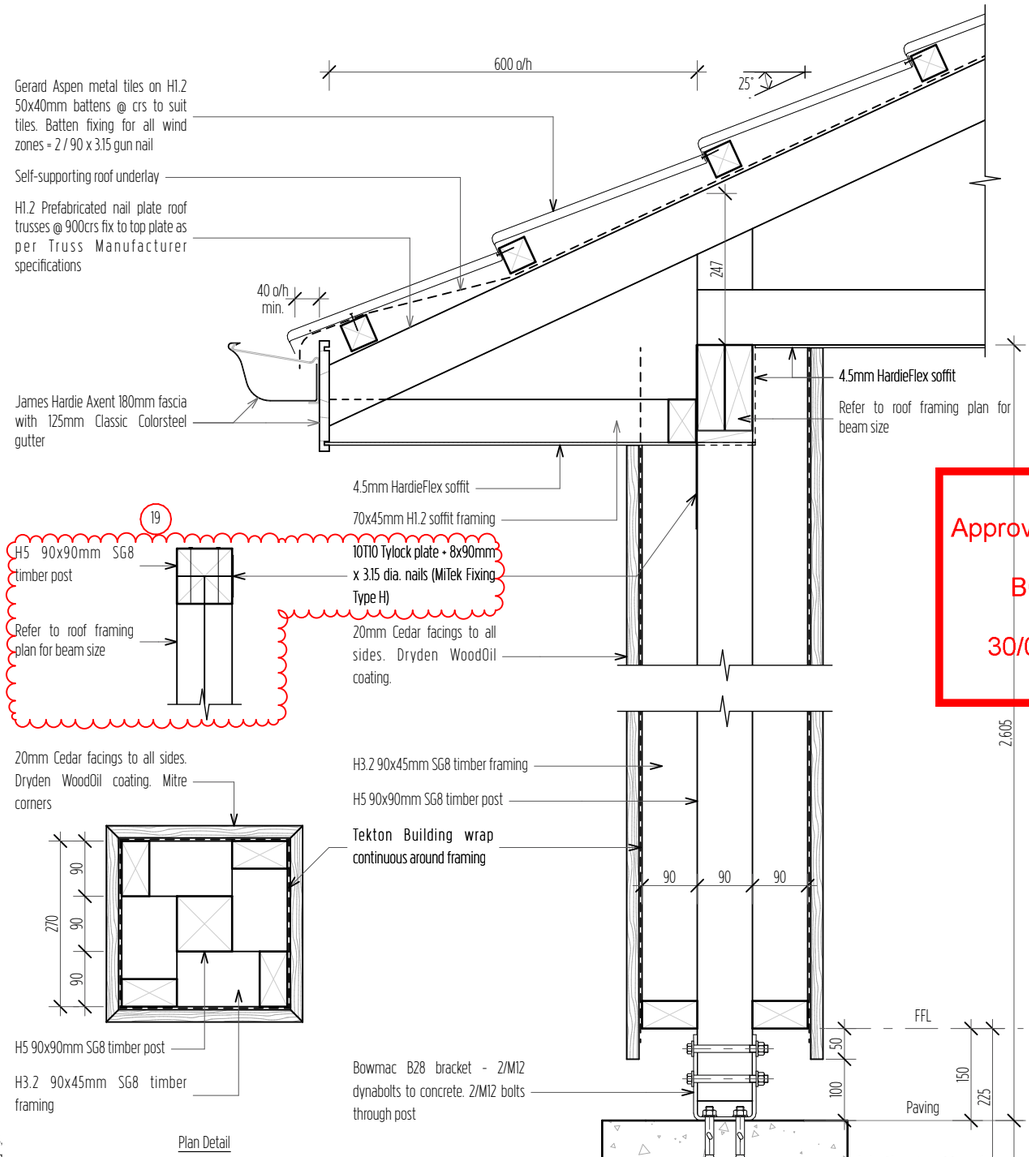

32 25deg. Metal Tile Alfresco Eave - EZpanel

Scale 1:10

Kaipara District Council
Approved Building Consent Document
BC210441 - Pg 28 of 46
30/08/2021 ComplyNZ

COASTAL HOMES

Project Title

ACDL Trustee Ltd. D&L Kendall

Site Address

Lot 81 The Sanctuary, Mangawhai

Drawing Issue

Building Consent

Sheet Title

Details - Roofing

Scale	Drawn
1:10 @ A3	Marc R. Vale
Date	Checked
25/08/21	CADetailer Ltd.
Drawing no.	Revision
707	03

All dimensions to be verified on site before commencing any work or producing shop drawings. Do not scale.
The copyright of this drawing remains with CH Northland Ltd and CADetailer Ltd.

RevID	ChID	Change Name	Date
02	09	Post treatment	18/08/21
	10	Cedar coating	
	17	Post footings	
03	19	Post uplift	25/08/21

FIXING TYPE B
4.7kN

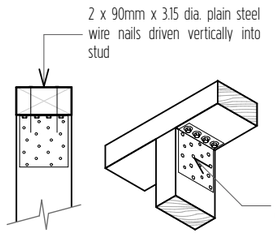

Recommended for internal wall options to avoid lining issues

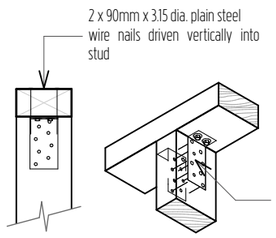

Recommended for internal wall options to avoid lining issues

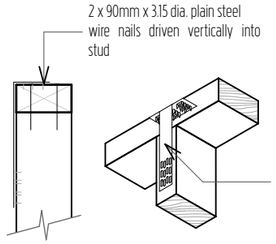

33 Lumberlok Top Plate Fixing Type B

Scale 1:10

FIXING TYPE E
1.4kN

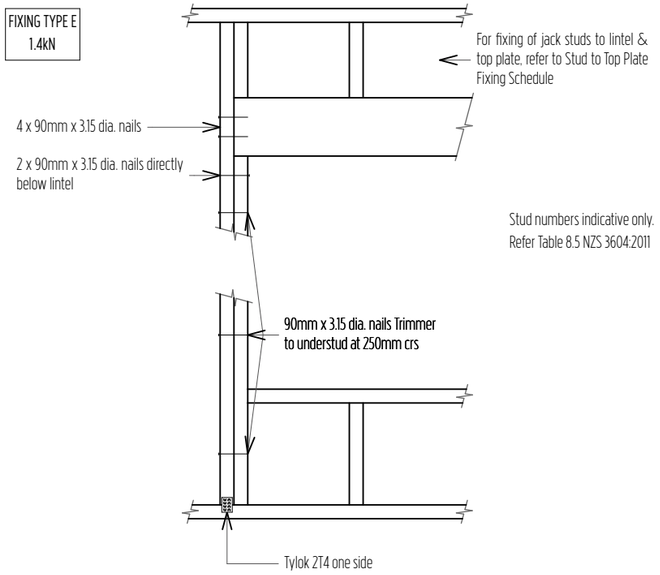

34 Lumberlok Lintel Fixing Type E

Scale 1:20

FIXING TYPE F
4.0kN

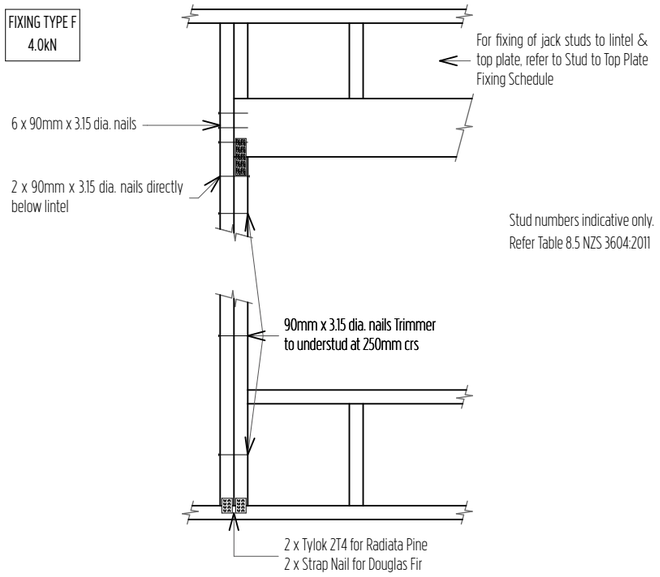

35 Lumberlok Lintel Fixing Type F

Scale 1:20

Kaipara District Council
Approved Building Consent Document

BC210441 - Pg 29 of 46

30/08/2021 ComplyNZ

COASTAL HOMES

Project Title

ACDL Trustee Ltd. D&L Kendall

Site Address

Lot 81 The Sanctuary, Mangawhai

Drawing Issue

Building Consent

Sheet Title

Details - Fixing

Scale	Drawn
1:10, 1:20 @ A3	Marc R. Vale
Date	Checked
27/06/21	CADetailer Ltd.
Drawing no.	Revision
708	01

All dimensions to be verified on site before commencing any work or producing shop drawings. Do not scale.
The copyright of this drawing remains with CH Northland Ltd and CADetailer Ltd.

RevID	ChID	Change Name	Date
01			27/06/21

FIXING TYPE G
7.5kN

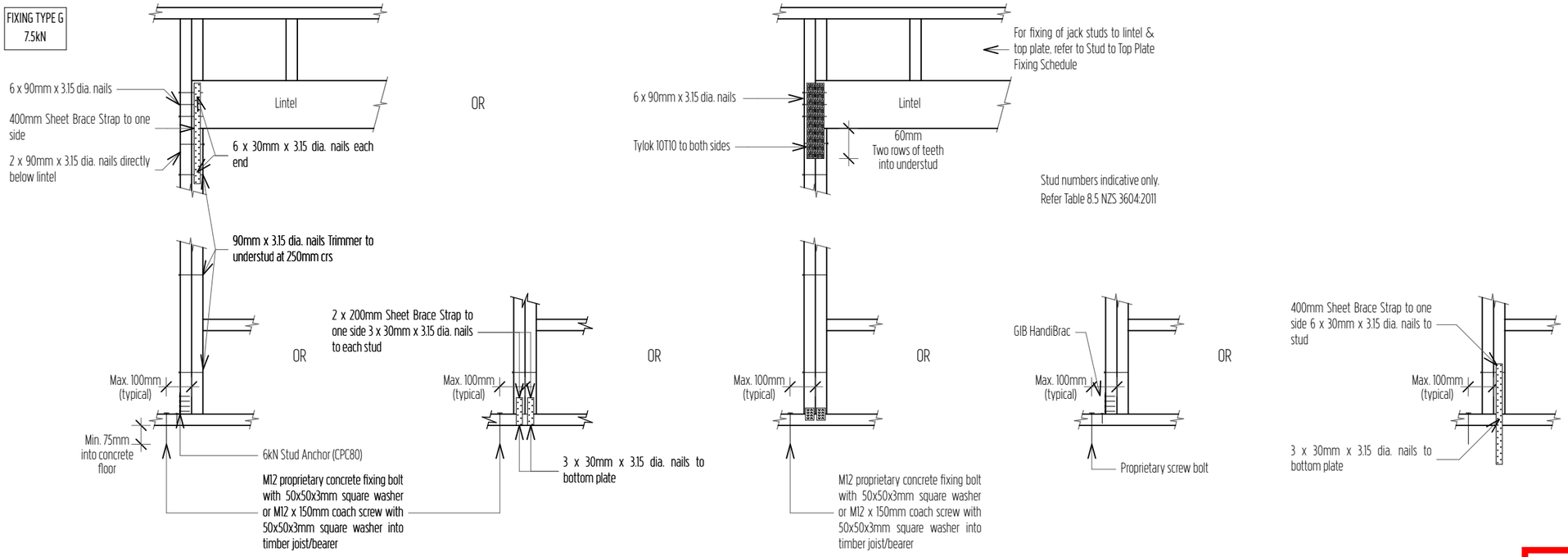

36 Lumberlok Lintel Fixing Type G

Scale 1:20

FIXING TYPE H
13.5kN

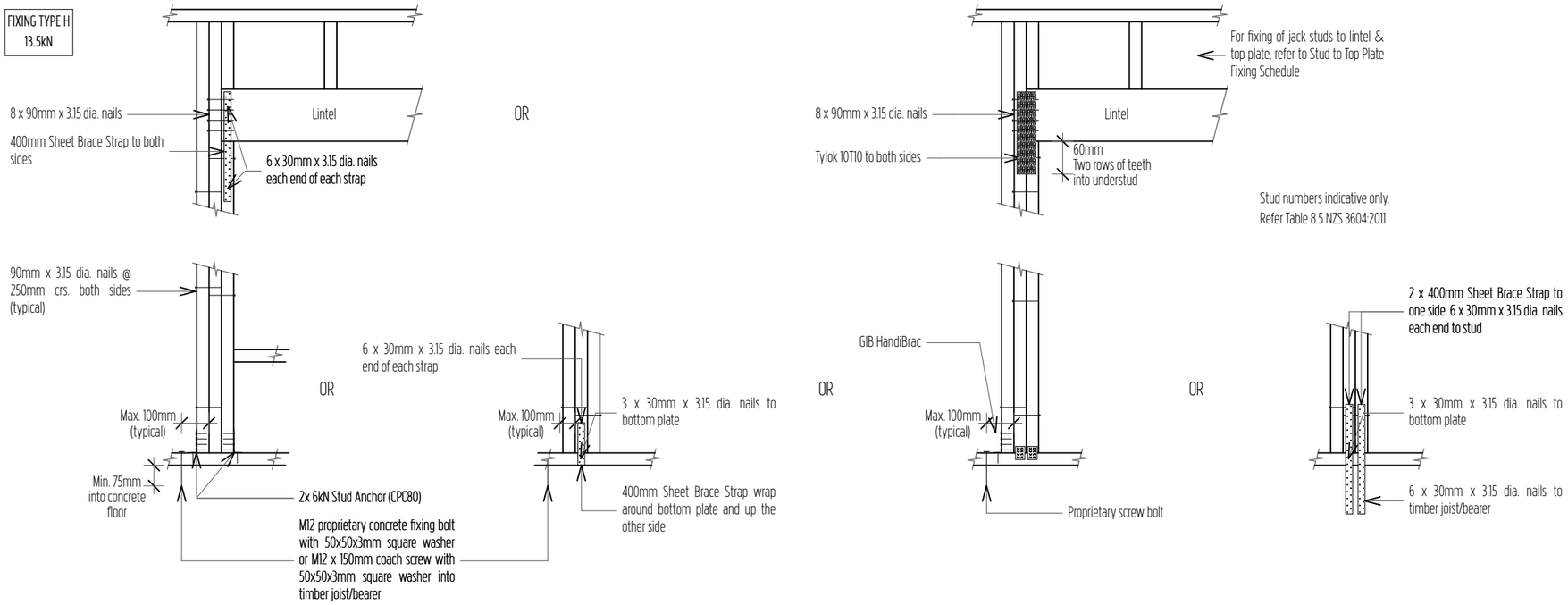

37 Lumberlok Lintel Fixing Type H

Scale 1:20

Kaipara District Council
Approved Building Consent Document

BC210441 - Pg 30 of 46

30/08/2021 ComplyNZ

COASTAL HOMES

Project Title

ACDL Trustee Ltd. D&L Kendall

Site Address

Lot 81 The Sanctuary, Mangawhai

Drawing Issue

Building Consent

Sheet Title

Details - Fixing

Scale	Drawn
1:20 @ A3	Marc R. Vale
Date	Checked
27/06/21	CADetailer Ltd.
Drawing no.	Revision
709	01

All dimensions to be verified on site before commencing any work or producing shop drawings. Do not scale.
The copyright of this drawing remains with CH Northland Ltd and CADetailer Ltd.

RevID	ChID	Change Name	Date
01			27/06/21

Key/Notes

TE	Tapered Edge
SE	Square Edge

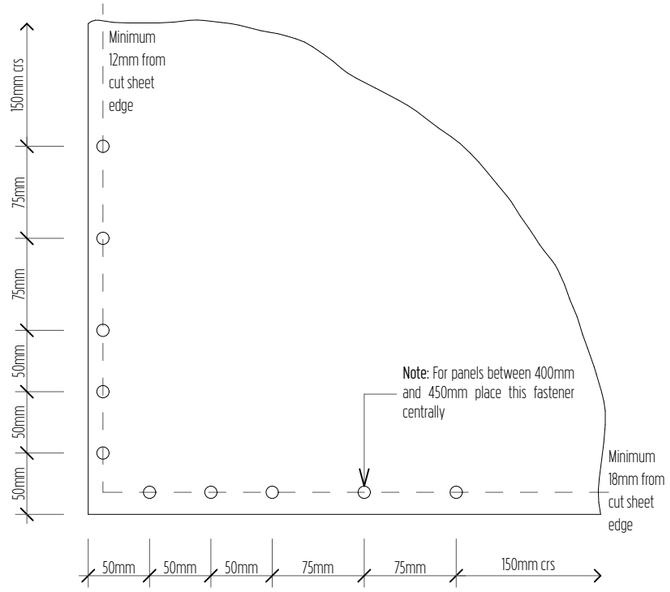

Unless stated all fastener spacings are maximums.

38 Corner Fastener Pattern

Scale 1:5

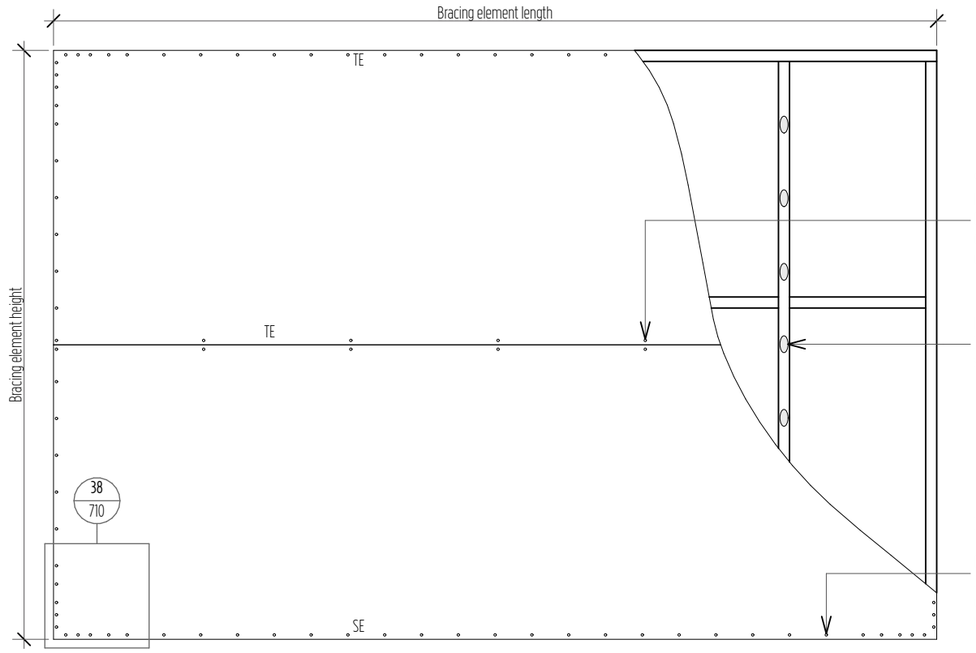

Specification code	Minimum length (m)	Lining requirement
GS1-N	0.4	Any 10mm or 13mm GIB® Standard plasterboard to one side only

39 GS1-N Horizontal Fixing

Scale 1:25

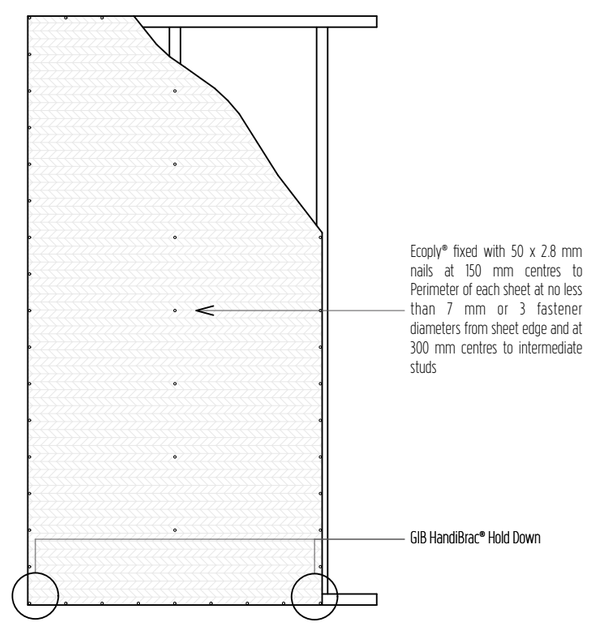

Specification code	Minimum length (m)	Lining requirement
EP1_0.4 EP1_0.6 EP1_1.2	0.4 0.6 1.2	Ecoply one side

40 EP1 Fixing

Scale 1:25

Kaipara District Council
Approved Building Consent Document

BC210441 - Pg 31 of 46

30/08/2021 ComplyNZ

COASTAL HOMES

Project Title

ACDL Trustee Ltd. D&L Kendall

Site Address

Lot 81 The Sanctuary, Mangawhai

Drawing Issue

Building Consent

Sheet Title

Details - Bracing

Scale	Drawn
1:5, 1:25 @ A3	Marc R. Vale
Date	Checked
27/06/21	CADetailer Ltd.
Drawing no.	Revision
710	01

All dimensions to be verified on site before commencing any work or producing shop drawings. Do not scale.
The copyright of this drawing remains with CH Northland Ltd and CADetailer Ltd.

RevID	ChID	Change Name	Date
01			27/06/21

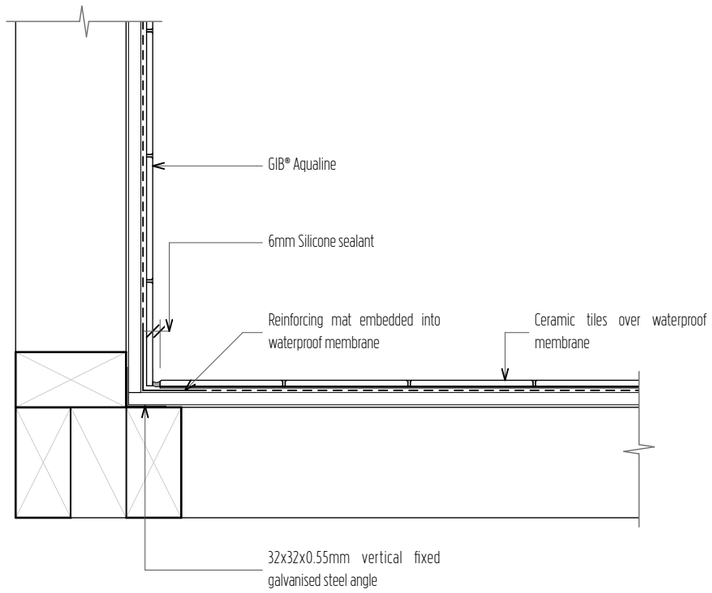

41 Shower Corner Detail - Plan

Scale 1:5

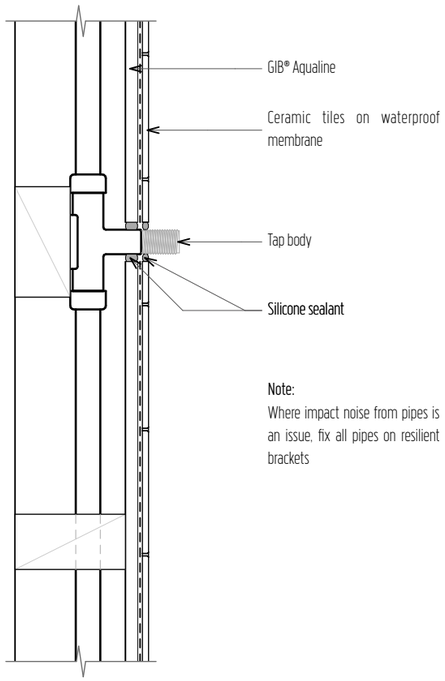

Note:
Where impact noise from pipes is an issue, fix all pipes on resilient brackets

42 Tiled Penetration Detail

Scale 1:5

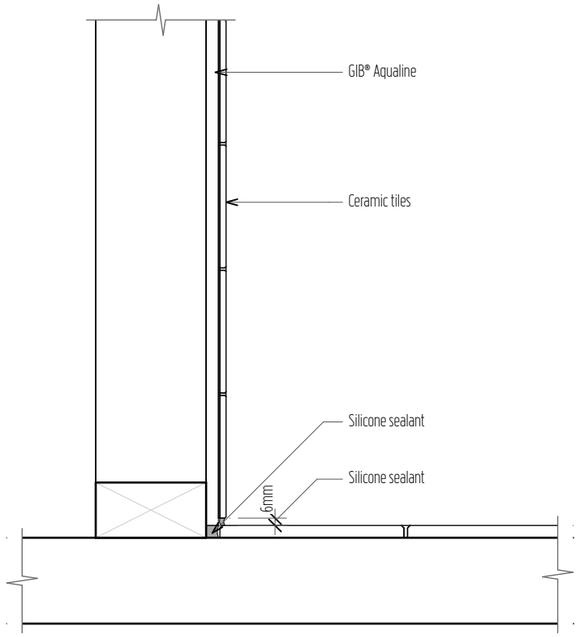

43 Tiled Wall/Floor Detail

Scale 1:5

Kaipara District Council
Approved Building Consent Document

BC210441 - Pg 32 of 46

30/08/2021 ComplyNZ

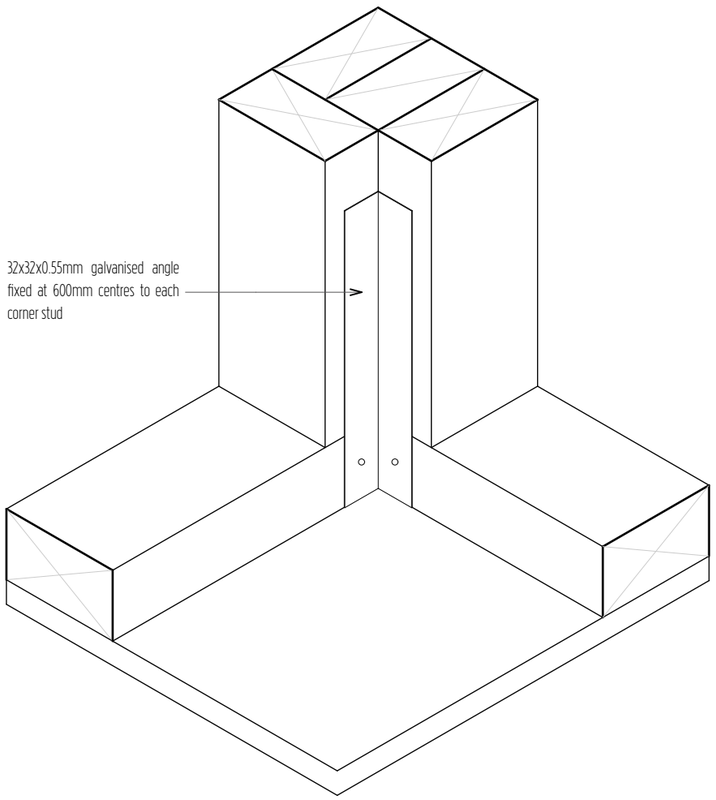

44 Shower Corner Angle Detail

Scale 1:5

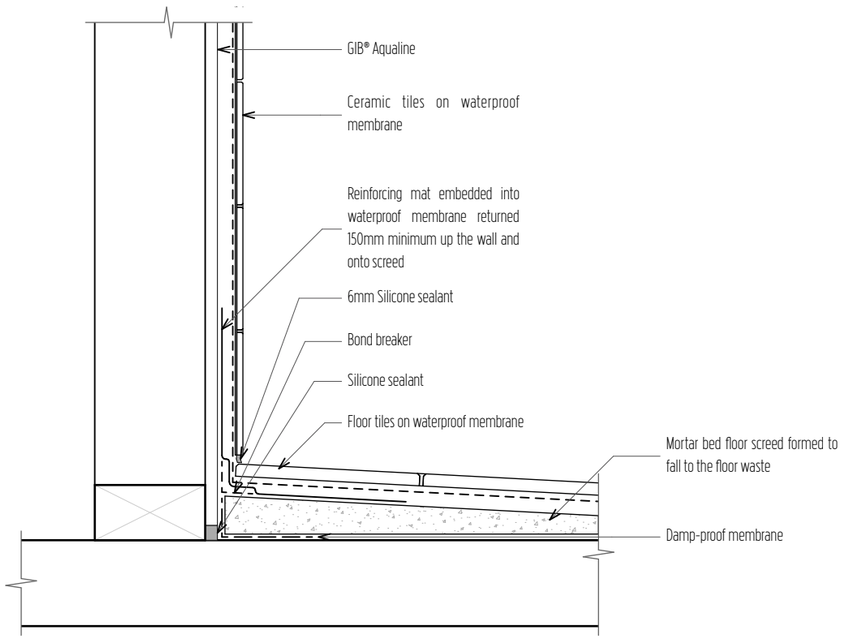

45 Shower - Tiled Walls and Base

Scale 1:5

COASTAL HOMES

Project Title

ACDL Trustee Ltd. D&L Kendall

Site Address

Lot 81 The Sanctuary, Mangawhai

Drawing Issue

Building Consent

Sheet Title

Details - GIB

Scale	Drawn
1:5 @ A3	Marc R. Vale
Date	Checked
27/06/21	CADetailer Ltd.
Drawing no.	Revision
711	01

All dimensions to be verified on site before commencing any work or producing shop drawings. Do not scale.
The copyright of this drawing remains with CH Northland Ltd and CADetailer Ltd.

RevID	ChID	Change Name	Date
01			27/06/21

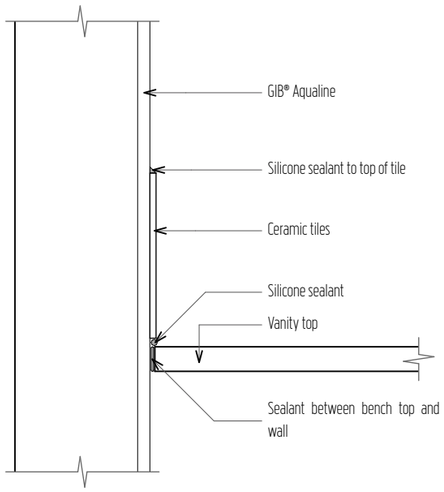

46 Vanity Top/Wall Detail

Scale 1:5

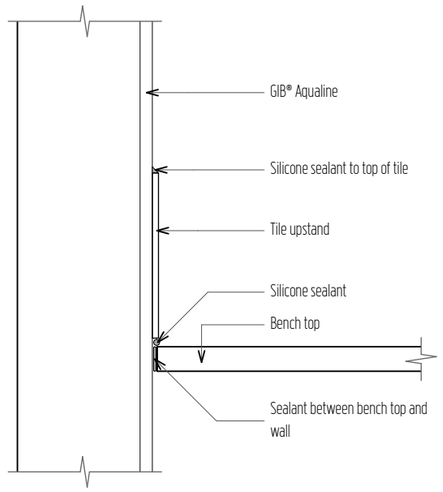

47 Kitchen and Laundry Bench Top/Wall Detail

Scale 1:5

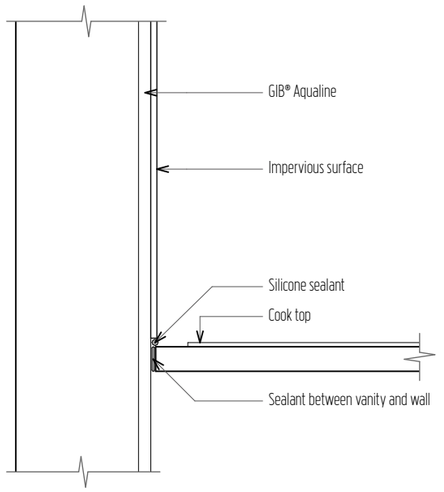

48 Cook Top/Wall Detail

Scale 1:5

Kaipara District Council
Approved Building Consent Document

BC210441 - Pg 33 of 46

30/08/2021 ComplyNZ

COASTAL HOMES

Project Title

ACDL Trustee Ltd. D&L Kendall

Site Address

Lot 81 The Sanctuary, Mangawhai

Drawing Issue

Building Consent

Sheet Title

Details - GIB

Scale	Drawn
1:5 @ A3	Marc R. Vale
Date	Checked
27/06/21	CADetailer Ltd.
Drawing no.	Revision
712	01

All dimensions to be verified on site before commencing any work or producing shop drawings. Do not scale.
The copyright of this drawing remains with CH Northland Ltd and CADetailer Ltd.

RevID	ChID	Change Name	Date
01			27/06/21

Kaipara District Council
Approved Building Consent Document

BC210441 - Pg 34 of 46

30/08/2021 ComplyNZ

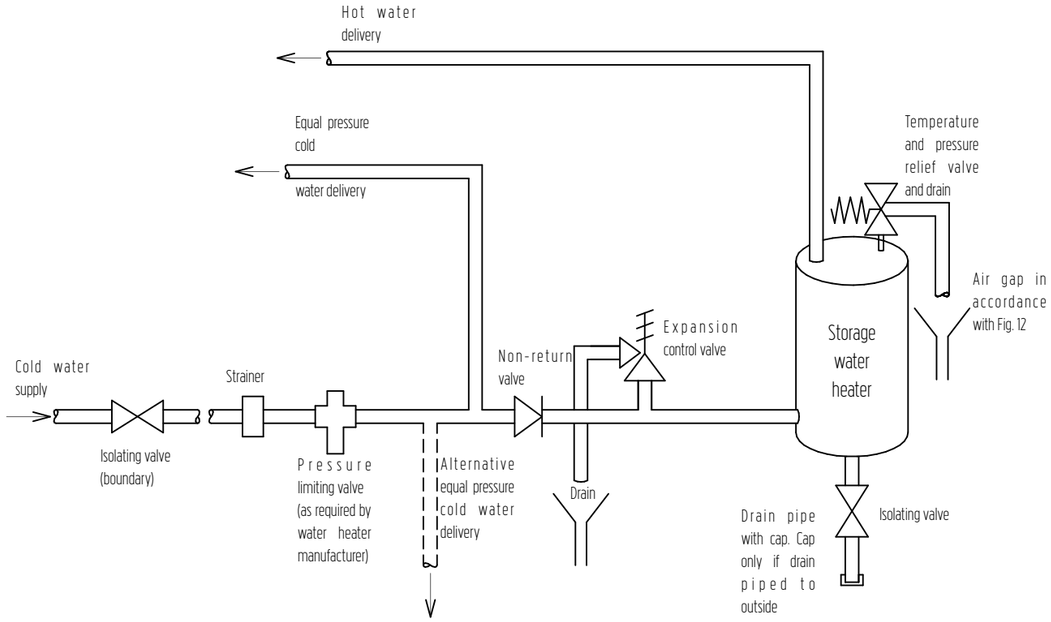

49 G12/AS1 Figure 8 Mains Pressure Storage Water Heater System (unvented)

Scale 1:5

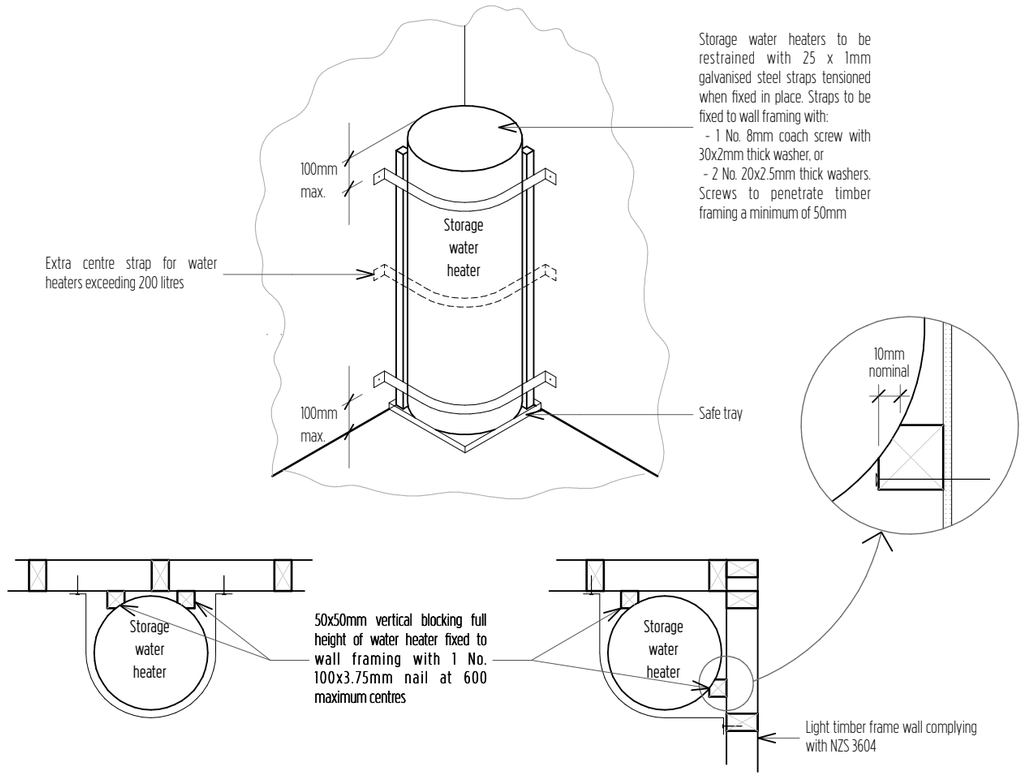

50 G12/AS1 Figure 14 Seismic Restraint of Storage Water Heaters 90 – 360 litres

Scale 1:5

COASTAL HOMES

Project Title

ACDL Trustee Ltd. D&L Kendall

Site Address

Lot 81 The Sanctuary, Mangawhai

Drawing Issue

Building Consent

Sheet Title

Details - HWC

Scale	Drawn
1:5 @ A3	Marc R. Vale
Date	Checked
27/06/21	CADetailer Ltd.
Drawing no.	Revision
713	01

All dimensions to be verified on site before commencing any work or producing shop drawings. Do not scale.
The copyright of this drawing remains with CH Northland Ltd and CADetailer Ltd.

RevID	ChID	Change Name	Date
01			27/06/21

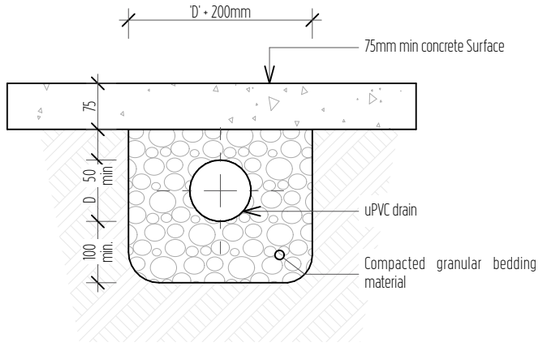

cover >125mm

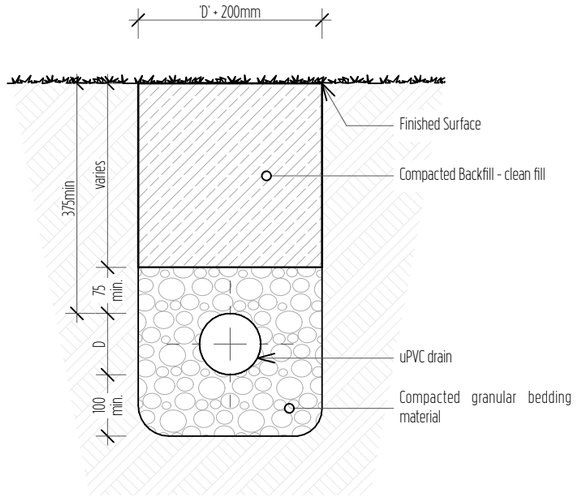

cover > 375mm

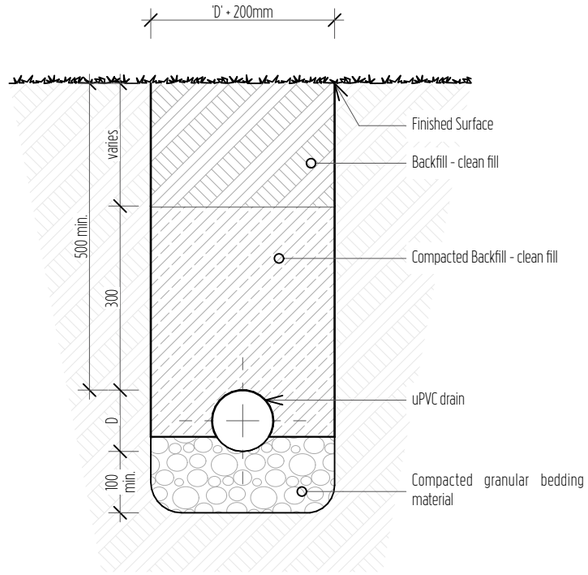

cover > 500mm

52 Drainage Bedding to AS/NZS3500.2

Scale 1:10

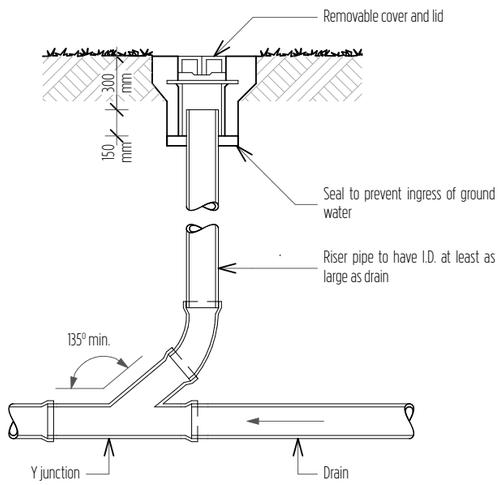

51 E1/ES1 Figure 10 Typical Rodding Point

Scale 1:20

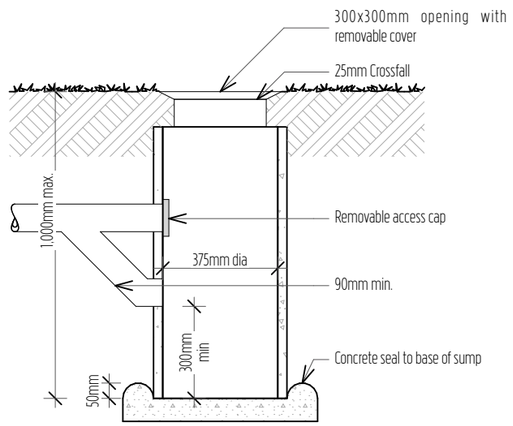

53 E1/AS1 Figure 8 Type-one Surface Water Sump

Scale 1:20

Kaipara District Council
Approved Building Consent Document

BC210441 - Pg 35 of 46

30/08/2021 ComplyNZ

COASTAL HOMES

Project Title

ACDL Trustee Ltd. D&L Kendall

Site Address

Lot 81 The Sanctuary, Mangawhai

Drawing Issue

Building Consent

Sheet Title

Details - Drainage

Scale	Drawn
1:20, 1:10 @ A3	Marc R. Vale
Date	Checked
27/06/21	CADetailer Ltd.
Drawing no.	Revision
714	01

All dimensions to be verified on site before commencing any work or producing shop drawings. Do not scale.
The copyright of this drawing remains with CH Northland Ltd and CADetailer Ltd.

RevID	ChID	Change Name	Date
01			27/06/21

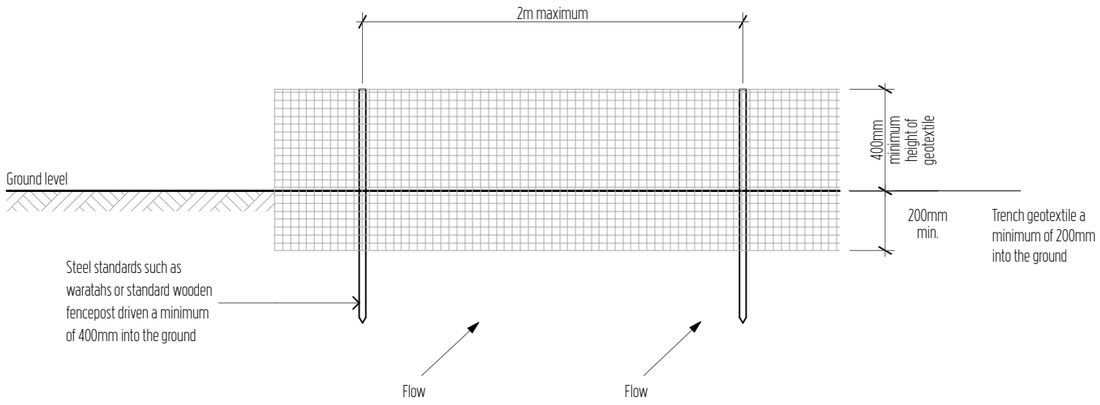

Elevation

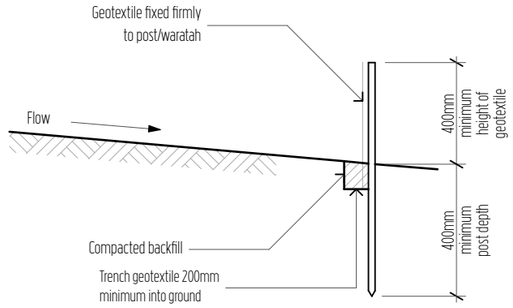

Cross Section

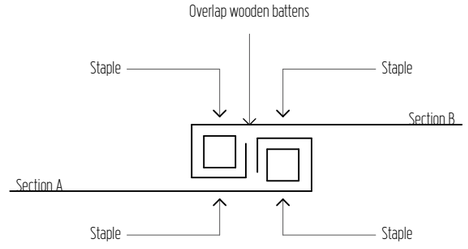

Standard Fabric Joint

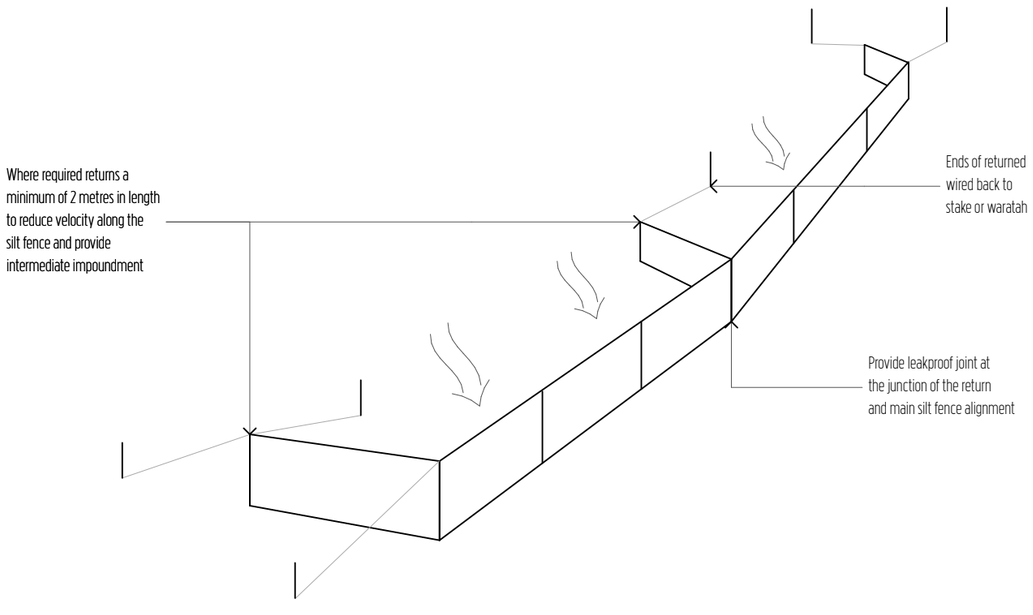

Perspective View

54 Silt Fence / Sediment Control

Scale 1:30

Key/Notes

Sediment and runoff control shall be designed and installed by the licensed building practitioner prior to or during earthworks for the project. The sediment controls shall be installed in accordance with the requirements of the acceptable guidelines for erosion and sediment control are documented in the ARC publication TP90.

Sediment and erosion control measures shall be the responsibility of the main contractor and shall be regularly checked and maintained as required during construction. Refer to earthworks plan for sediment control locations.

Kaipara District Council
Approved Building Consent Document
BC210441 - Pg 36 of 46
30/08/2021 ComplyNZ

COASTAL HOMES

Project Title
ACDL Trustee Ltd. D&L Kendall

Site Address
Lot 81 The Sanctuary, Mangawhai

Drawing Issue
Building Consent

Sheet Title
Details - Sediment Control

Scale	Drawn
1:30 @ A3	Marc R. Vale
Date	Checked
27/06/21	CADetailer Ltd.
Drawing no.	Revision
715	01

All dimensions to be verified on site before commencing any work or producing shop drawings. Do not scale.
The copyright of this drawing remains with CH Northland Ltd and CADetailer Ltd.

RevID	ChID	Change Name	Date
01			27/06/21

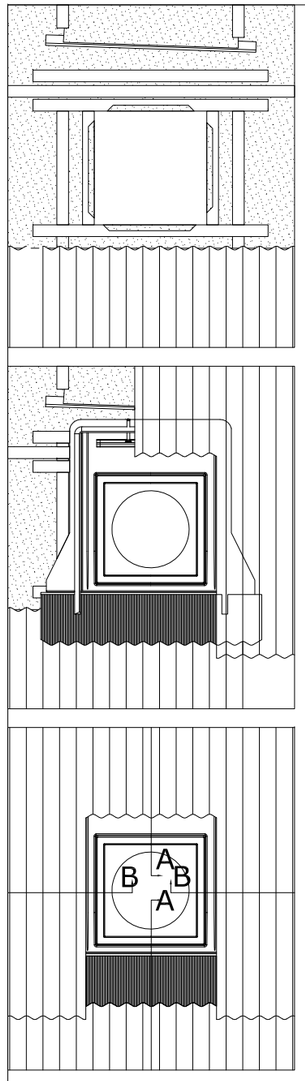

ELEVATION

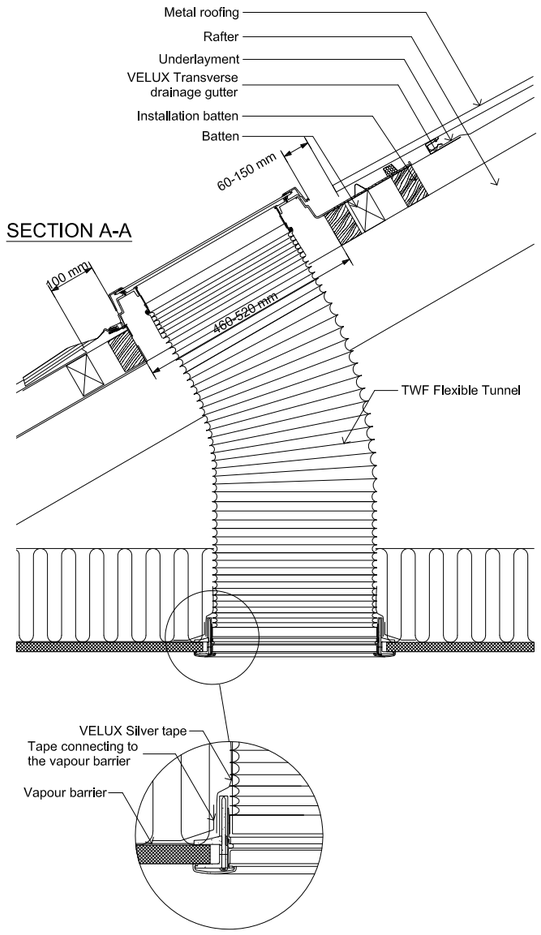

SECTION A-A

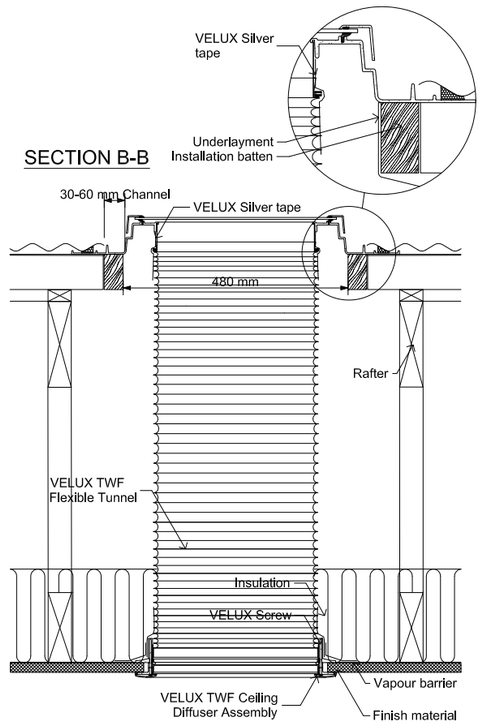

SECTION B-B

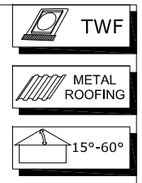

Kaipara District Council
Approved Building Consent Document
BC210441 - Pg 37 of 46
30/08/2021 ComplyNZ

VELUX NEW ZEALAND LTD.
0800 650 445
Sky-Product Management

	Name	Date
Drawn by		June 11
Checked by		June 11
Drawing No.		

TWF - Flexible Sun Tunnel in Profiled Metal Roof

This drawing is an instrument of service and is provided for informational use only.
© 2011 VELUX GROUP
® VELUX is a registered trademark

55 TWF - Flexible Sun Tunnel in Profiled Metal Roof
Scale 1:1

COASTAL HOMES

Project Title
ACDL Trustee Ltd. D&L Kendall

Site Address
Lot 81 The Sanctuary, Mangawhai

Drawing Issue
Building Consent

Sheet Title
Details - Roofing

Scale	Drawn
1:1 @ A3	Marc R. Vale
Date	Checked
18/08/21	CADetailer Ltd.
Drawing no.	Revision
716	01

All dimensions to be verified on site before commencing any work or producing shop drawings. Do not scale.
The copyright of this drawing remains with CH Northland Ltd and CADetailer Ltd.

RevID	ChID	Change Name	Date
01			18/08/21

Door / Window ID	D0.01	D0.02	D0.03	D0.04	D0.05	D0.06	D0.07
Quantity	1	1	1	1	1	1	1
2D Elevation (Unit Size Dimensioned)		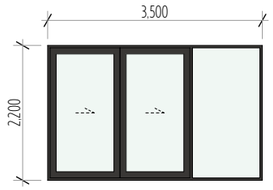	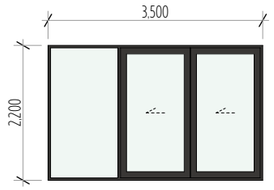	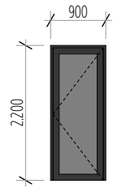	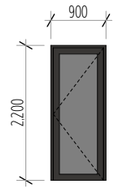	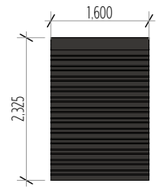	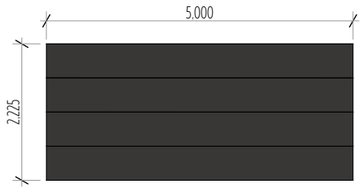
Unit W x H Size	890•2,200	3,500•2,200	3,500•2,200	900•2,200	900•2,200	1,600•2,200	5,000•2,200
FL to Head Height	2,200	2,200	2,200	2,200	2,200	2,200	2,200
FL to Sill	0	0	0	0	0	0	0
Restrictor stays	☐	☐	☐	☐	☐	☐	☐
Double-Glazed	☒	☒	☒	☒	☒	☐	☐
Safety Glass	☒	☒	☒	☒	☒	☐	☐
Frosted	☐	☐	☐	☒	☒	☐	☐

Door / Window ID	D0.08	D0.09	D0.10	D0.11	D0.12	D0.13	W0.01
Quantity	1	1	1	1	1	1	1
2D Elevation (Unit Size Dimensioned)	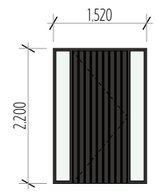	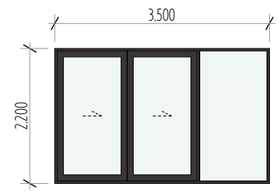	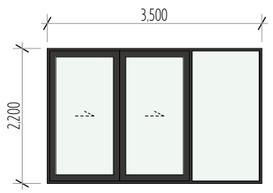	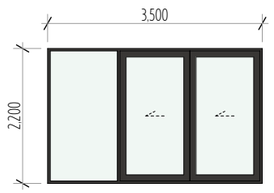	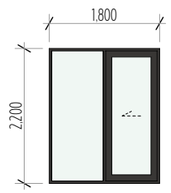	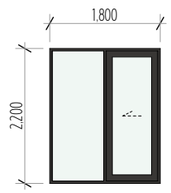	
Unit W x H Size	1,520•2,203	3,500•2,200	3,500•2,200	3,500•2,200	1,800•2,200	1,800•2,200	700•2,200
FL to Head Height	2,203	2,200	2,200	2,200	2,200	2,200	2,200
FL to Sill	0	0	0	0	0	0	0
Restrictor stays	☐	☐	☐	☐	☐	☐	☒ 07
Double-Glazed	☒	☒	☒	☒	☒	☒	☒
Safety Glass	☐	☒	☒	☒	☒	☒	☐
Frosted	☐	☐	☐	☐	☐	☐	☐

Door / Window ID	W0.02	W0.03	W0.04	W0.05	W0.06	W0.07	W0.08	W0.09	W0.10
Quantity	1	1	1	1	1	1	1	1	1
2D Elevation (Unit Size Dimensioned)	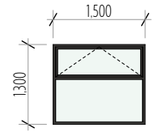	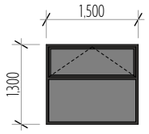	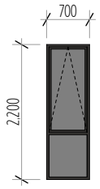	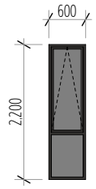			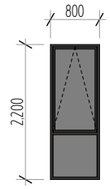	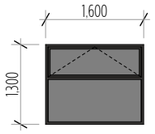	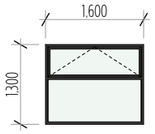
Unit W x H Size	1,500•1,300	1,500•1,300	700•2,200	600•2,200	700•2,200	700•2,200	800•2,200	1,600•1,300	1,600•1,300
FL to Head Height	2,200	2,200	2,200	2,200	2,200	2,200	2,200	2,200	2,200
FL to Sill	900	900	0	0	0	0	0	900	900
Restrictor stays	☒	☒	☐	☐	☐	☐	☐	☒	☒
Double-Glazed	☒	☒	☒	☒	☒	☒	☒	☒	☒
Safety Glass	☐	☐	☐	☒	☐	☐	☒	☒	☐
Frosted	☐	☒	☒	☒	☐	☐	☒	☒	☐

Exterior Door & Window Schedule

Key/Notes

All glazing to NZS 4223 - Parts 1 & 4:2008, Parts 2 & 3:2016

Dimensions shown are Unit Size

Kaipara District Council
Approved Building Consent Document

BC210441 - Pg 38 of 46

30/08/2021 ComplyNZ

COASTAL HOMES

Project Title

ACDL Trustee Ltd. D&L Kendall

Site Address

Lot 81 The Sanctuary, Mangawhai

Drawing Issue

Building Consent

Sheet Title

Exterior Door & Window Schedule

Scale	Drawn
1:100 @ A3	Marc R. Vale
Date	Checked
18/08/21	CADetailer Ltd.
Drawing no.	Revision
801	03

All dimensions to be verified on site before commencing any work or producing shop drawings. Do not scale.
The copyright of this drawing remains with CH Northland Ltd and CADetailer Ltd.

RevID	ChID	Change Name	Date
01			14/05/21
02	01	Building Consent	27/06/21
03	07	Restrictor Stay to W0.01	18/08/21

Room Location	Bath	Bedroom 2	Bedroom 2 WR	Bedroom 3	Bedroom 3 WR	Bedroom 4	Bedroom 4 WR	Coats	Ensuite	Garage	Garage Store	Laundry	Linen	Master Bedroom	Master Bedroom WIR	Master Bedroom WR	Ride-On Mower Garage	Scullery	Store
Door Leaf	Bath	760	2/610	760	2/610	760	2/610	2/610	760	760	2/610	760	2/610	760	760 CS	2/760 Slider	760 CS	760 CS	2/610
Quantity	1	1	1	1	1	1	1	1	1	1	1	1	1	1	1	1	1	1	1
2D Elevation (Unit Size Dimensioned)	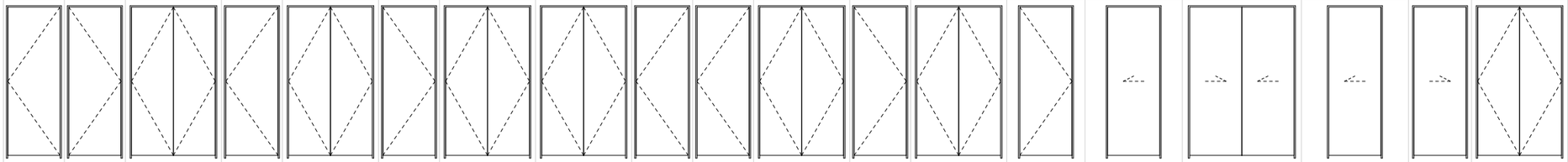																		
Frame W x H Size	800•2,220	800•2,220	1,260•2,220	800•2,220	1,260•2,220	800•2,220	1,260•2,220	1,260•2,220	800•2,220	800•2,220	1,260•2,220	800•2,220	1,260•2,220	800•2,220	800•2,220	1,560•2,220	800•2,220	800•2,220	1,260•2,220

Room Location	Store	WC
Door Leaf	710	760
Quantity	2	1
2D Elevation (Unit Size Dimensioned)	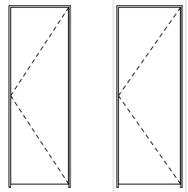	
Frame W x H Size	750•2,220	800•2,220

Interior Door Schedule

Key/Notes

All glazing to NZS 4223 - Parts 1 & 4:2008, Parts 2 & 3:2016

Dimensions shown are Unit Size

Kaipara District Council
Approved Building Consent Document

BC210441 - Pg 39 of 46

30/08/2021 ComplyNZ

COASTAL HOMES

Project Title

ACDL Trustee Ltd. D&L Kendall

Site Address

Lot 81 The Sanctuary, Mangawhai

Drawing Issue

Building Consent

Sheet Title

Internal Door Schedule

Scale	Drawn
1:100 @ A3	Marc R. Vale
Date	Checked
27/06/21	CADetailer Ltd.
Drawing no.	Revision
802	01

All dimensions to be verified on site before commencing any work or producing shop drawings. Do not scale.
The copyright of this drawing remains with CH Northland Ltd and CADetailer Ltd.

RevID	ChID	Change Name	Date
01			27/06/21

Truss Fixings

X - LUMBERLOK JH47x90 Joist Hanger
Z - LUMBERLOK JH47x120 Joist Hanger
P - LUMBERLOK JH47x190 Joist Hanger
E - LUMBERLOK JH95x165 Joist Hanger
O - Pair of LUMBERLOK CT200 Ceiling Ties
H - LUMBERLOK CT400 Cyclone Tie
B - LUMBERLOK CT600 Cyclone Tie
M - Pair of LUMBERLOK Multi Grips
NP - LUMBERLOK Nailon Plate
N - LUMBERLOK N21 Diagonal Cleat
W - Pair LUMBERLOK CPC40 Cleats
K - LUMBERLOK TTP 16kN Truss to Top Plate set
S - Single LUMBERLOK CPC40 Cleat

Roof Bracing

Refer to:
LUMBERLOK Roof Bracing Specifications
Brochure 08/2006 foe end fixing details.

The brace must be locatedsuch that it forms
an angle of 45° +- 5° to the wall.

NOTES:

All other areas must have a minimum of a pair of 90mm skew nails & a pair of wire dogs for truss to top plate connections.
Refer to:
LUMBERLOK Timber Connectors Characteristic Loadings Data brochure 03/4

Kaipara District Council
Approved Building Consent Document

BC210441 - Pg 40 of 46

30/08/2021 ComplyNZ

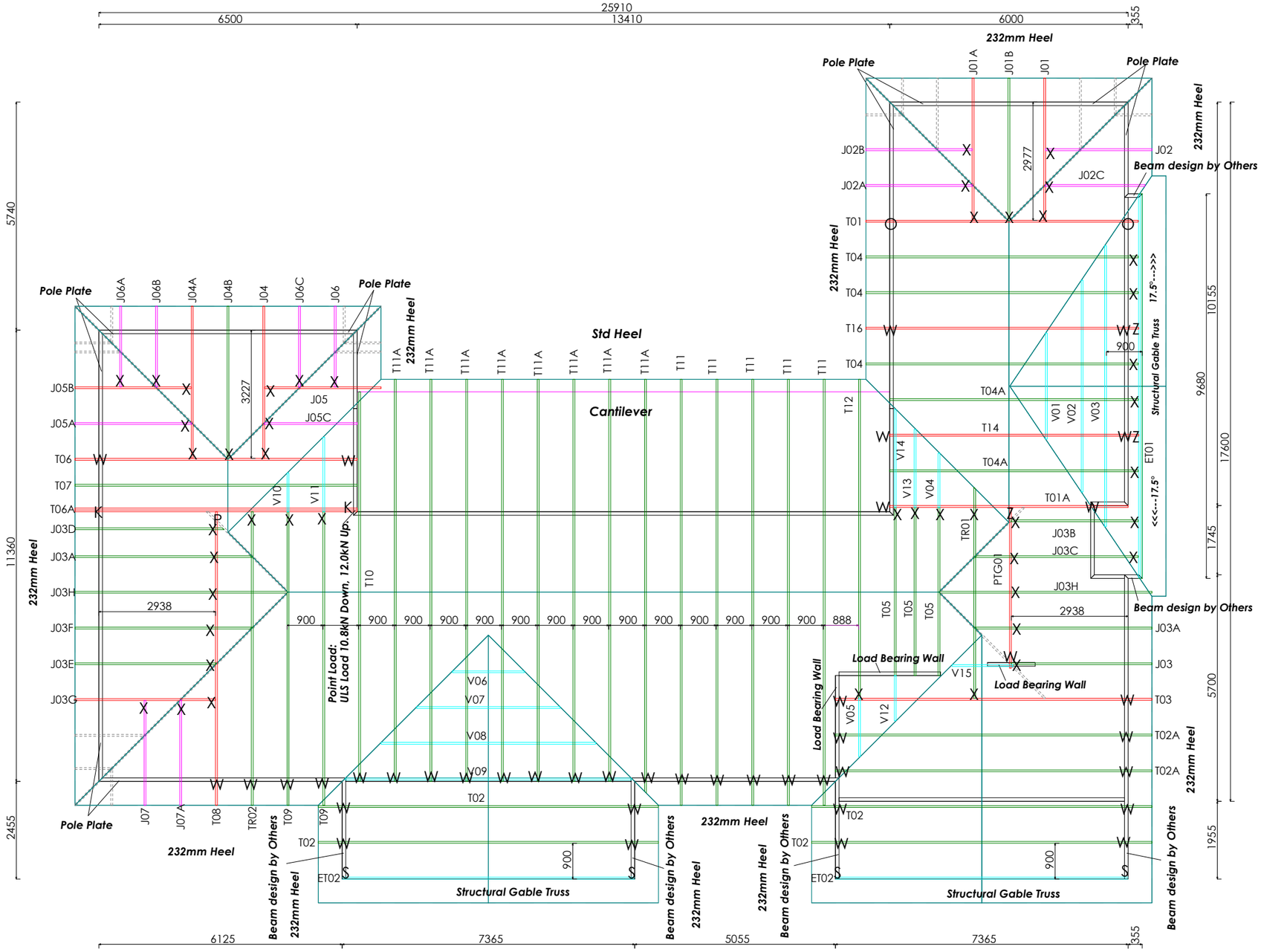

Buildable Truss Layout Notes:

This buildable truss layout and associated design statements are for building consent purposes only and should not be used for construction without Timberworld Ltd or MiTek New Zealand certification.

This is a preliminary design that may change at the time of manufacture.

Any additional design requirements for the structure under load bearing points and/or any additional load bearing walls are not covered within the design and require a seperate design to be provided by the designer/engineer unless stated otherwise within this design.

Roof Bracing instruction by other or as per "Section 10 NZS 3604:2011.

Copyright - These drawings are the property of ITM Warkworth Ltd.

This layout should be read in conjunction with the designers / engineering drawings.

These trusses have NOT been designed to carry any hot water cylinders, air conditioning units, roof storage, solar panels and/or any other such loads.

This layout and associated PS1 statement is to be superseded by a manufactured design and roof framing layout at the time of construction.

IF IN DOUBT PLEASE ASK, DON'T GUESS!

Bottom Chord Lateral supports Required at 1800mm ctrs

PrimeCad v4.7.301

MANGAWHAI WARKWORTH

Site Address :
Kendall
Lot 81 The Sanctuary
Mangawhai
DP 556753

Sheet Title :
For Building Consent
Buildable Truss Layout

Date : 23 May,2021 | Drawn : Mike Ayers
Scale : NTS | System : MiTek 20/20

Job Details:
Roof Pitch : 25.0 & 17.5 deg
Roof Material : Metal Tiles
Ceiling Material : Rondo on clips
Wind Zone : High
Roof Snow Load : 0.000kPa

Truss Centres : 900mm
Roof Live Load : 0.250kPa
Floor Live Load : kPa
Wind Speed : 44m/s

MiTek™

Job Title :
31122
Sheet :
1
Revision Number :

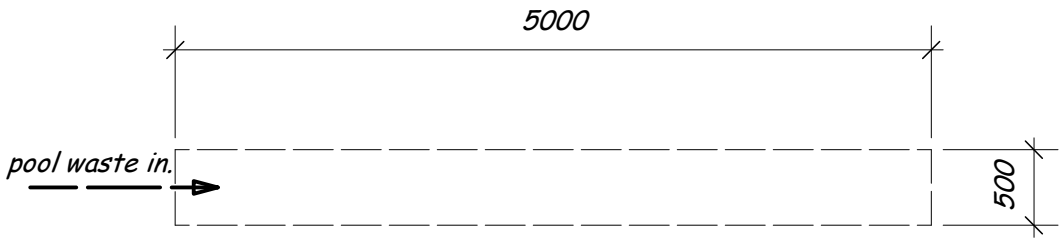

soak pit - plan.

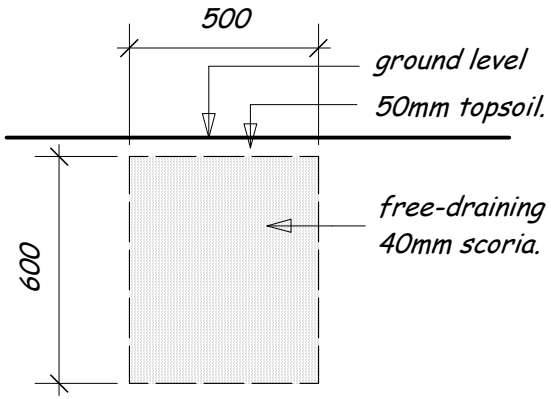

soak pit - section.

Kaipara District Council
Approved Building Consent Document

BC210441 - Pg 41 of 46

30/08/2021 ComplyNZ

- check all dimensions and levels on site. DO NOT SCALE.
- all branded materials to be fixed strictly to manufacturers specifications and details.

standard soak pit details.

FREEDOM POOLS & SPAS.

phone 09 426 5323.
fax. 09 426 5325.
14 - unit 1 & 2 Agency Lane.
Silverdale, Auckland

job no. 14/124
July. '14.

sheet no. 1.

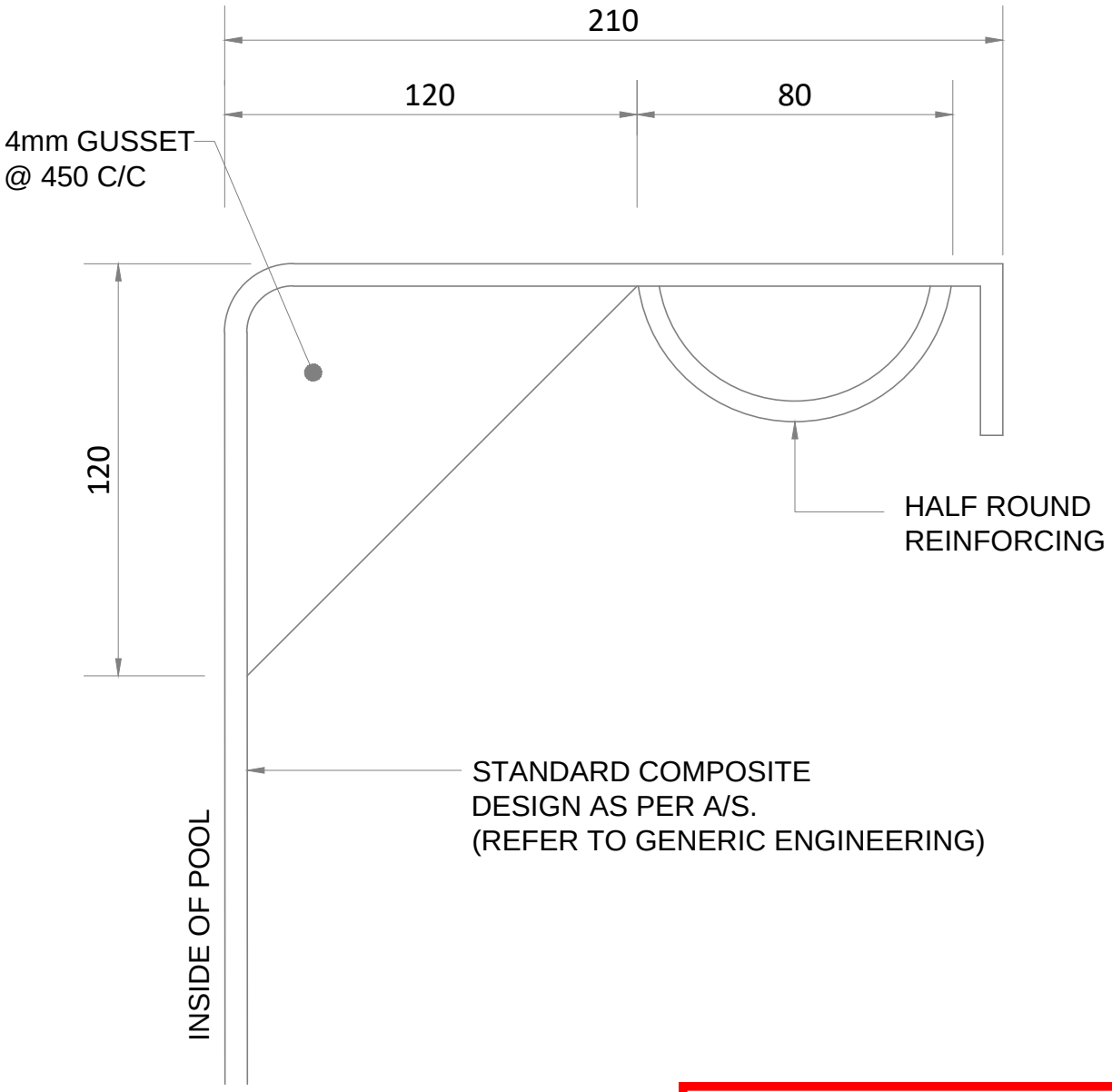

Kaipara District Council
Approved Building Consent Document

BC210441 - Pg 42 of 46

30/08/2021 ComplyNZ

ENGINEERING NEW ZEALAND OFFICIAL MEMBER

Richard A O Field
IPENZ
Membership No. 1165194

DATE: 02.10.2019

GF CONSULTING
STRUCTURAL ENGINEERS PROJECT MANAGERS DEVELOPMENT MANAGERS
Suite 1/63 Winton Road, Joondalup WA 6027
PH: (08) 9301 4386
MOBILE: 0432 944 316
EMAIL: gfconsulting01@bigpond.com
www.gfconsulting.com.au

JOB NUMBER	
DESIGNED	RF
CHECKED	RF
DRAWN	JR
DATE	20.09.19
SCALE	NTS

PROJECT
STANDARD COPING DETAIL
FOR FIBRE GLASS POOL

CLIENT
FREEDOM POOLS

REV

DWG NO.
S-01

GENERAL INSTALLATION NOTES:

REFERENCE STANDARD AS/NZS 1839:1994 SWIMMING POOLS - PREMOULDED FIBRE-REINFORCED PLASTICS - DESIGN AND FABRICATION.

1. LOCATE THE POOL CLEAR OF STRUCTURES OR FEATURES, INCLUDING TREES, CAPABLE OF IMPOSING LOADS ON THE POOL STRUCTURE. SEEK ENGINEERING ADVICE IF ANY FEATURES EXISTS WITHIN A DISTANCE FROM THE EDGE OF THE POOL WHICH IS EQUAL TO OR LESS THAN THE DEPTH OF THE POOL.
2. SEEK ENGINEERING ADVICE IF THE POOL IS PROPOSED TO BE LOCATED ON A SLOPE STEEPER THAN ONE (1) VERTICAL IN EIGHT (8) HORIZONTAL.
3. THIS POOL IS DESIGNED FOR INSTALLATION ON SITES RATED 'A', 'S' AND 'H' (AS 2870-2011 Residential Slabs and Footings). FOR SITES WITH OTHER CLASSIFICATIONS, REFER TO SITE PLAN FOR ANY ADDITIONAL REQUIREMENTS KNOWN AT THE TIME OF PREPARATION, OR SEEK ENGINEERING ADVICE.
4. MAINTAIN A ZONE OF NOT LESS THAN 600mm WIDTH ALL AROUND THE POOL, WHICH FALLS AWAY FROM THE POOL AT A SLOPE OF NOT LESS THAN ONE (1) VERTICAL IN ONE HUNDRED (100) HORIZONTAL.
5. EXCAVATION MUST PROVIDE A MINIMUM CLEARA[illegible] THE FULL PERIMETER OF THE POOL WALLS ON [illegible]TES RATED 'A', 'S' AND 'H'.
6. THE POOL FOUNDATION MUST BE OF UNDISTURBED SOIL OR ROCK (including weathered rock) AND MUST BE OF THE SAME MATERIAL OVER THE FULL AREA OF THE POOL. SEEK ENGINEERING ADVICE IF DIFFERENT MATERIALS ARE ENCOUNTERED AT FOUNDATION LEVEL.
7. BEDDING FOR THE POOL MUST CONSIST OF UNBOUND, FREE DRAINING SAND OR AGGREGATE OF 6mm MAXIMUM PARTICLE SIZE, PLACED TO A DEPTH OF 100mm, AND CAREFULLY SCREEDED TO THE PROFILE OF THE POOL FLOOR. CLAY, SILT AND ORGANIC MATERIALS MUST NOT FORM PART OF THE BEDDING LAYER.
8. PLACEMENT OF THE POOL STRUCTURE MAY PROCEED FOLLOWING PREPARATION OF THE MAIN DRAIN AND HYDROSTATIC RELIEF VALVE RECESS IN THE BEDDING.
9. BED THE POOL STRUCTURE UNIFORMLY ON THE BEDDING LAYER. EXCEPT WHERE FREE DRAINING CONDITIONS AND THE ABSENCE OF WATER TABLE ARE ASSURED, INSTALL A STANDPIPE RELIEF DRAIN TO SURFACE AND GRATED COVER IN ACCORDANCE WITH THE DETAILS AND REQUIREMENT SETOUT IN AS/NZS 1839-1994 SWIMMING POOLS - PREMOULDED FIBRE-REINFORCED PLASTICS INSTALLATION.
10. THOROUGHLY BACKFILL THE VOID BETWEEN THE POOL AND THE EXCAVATION WITH A CEMENT-STABILIZED-SAND DRY MIX. NOTE THAT IN NATURAL SAND SITES, FREE FLOWING SITE MATERIAL MAY BE USED FOR BACKFILL. PLACE THE BACKFILL PROGRESSIVELY TO THE PERIMETER OF THE POOL, IN LAYERS NOT EXCEEDING 300mm. COMPACT THE BACKFILL BY RODDING TO PREVENT THE FORMATION OF VOIDS WHICH MAY LEAD TO FUTURE SOIL MIGRATION IN SERVICE. BACKFILL OTHER THAN NATURALLY OCCURING SAND SITES SHOULD COMPRISE.
    - PRE-MIXED CLEAN SAND AND CEMENT, MIXED AT THE RATIO OF 16:1 BY VOLUME, OR
    - MACHINE MIXED AT SITE, CLEAN SAND AND CEMENT, MIXED AT THE RATIO 10:1 BY VOLUME, OR
    - HAND MIXED AT SITE, CLEAN SAND AND CEMENT, MIXED AT THE RATIO OF 6:1 BY VOLUME, OR
11. POOL-ASSOCIATED SERVICES MUST BE INSTALLED TO THE REQUIREMENTS OF THE RESPECTIVE AUSTRALIAN STANDARDS AND LOCAL AUTHORITY AND OTHER STATUTORY REQUIREMENTS, PARTICULARLY THOSE RELATING TO
    - ELECTRICAL WORKS.
    - PLUMBING WORKS.
    - POOL FENCING.
    - AND OTHERWISE TO AS/NZS 1839.
12. THE SUPPLIER OF A GRP SWIMMING POOL MUST PROVIDE TO THE PURCHASER, THE OPERATING INSTRUCTIONS NOTED IN AS/NZS 1839, INCLUDING THOSE APPLICABLE TO THE EMPTYING OF THE POOL, OPERATION OF ASSOCIATED DRAINAGE STANDPIPES AND ANY ADDITIONAL PRECAUTIONS APPLYING TO THE PARTICULAR INSTALLATION OR CONDITIONS.
13. SUPPLIER TO SEPARATELY ADVISE THE PURCHASER OF RESTRICTIONS ON LOWERING THE WATER LEVEL IN THE POOL.

GENERAL CONSTRUCTION NOTES:

REFERENCE STANDARD AS/NZS 1839:1994 SWIMMING POOLS - PREMOULDED FIBRE-REINFORCED PLASTICS - DESIGN AND FABRICATION.

A. COMPONENTS OF THE GRP COMPOSITE:
1. COSMETIC LAYER (gelcoat) - WATER/CHLORINE/UV STABLE RESIN WITH FILLERS TO NOT LESS THAN 0.35mm THICKNESS,WITH AVERAGE THICKNESS NOT LESS THAN 0.5mm.
2. CORROSION BARRIER (glass fibre reinforced) - WATER/CHLORINE STABLE RESIN WITH GLASS FIBRE REINFORCEMENT FULLY SATURATED AND FREE FROM AIR BUBBLES, TO 2mm (min) THICKNESS THROUGHOUT.
3. STRUCTURAL LAYER (glass fibre reinforced) - TO NOT LESS THAN 6mm THICKNESS THROUGHOUT.
4. OUTER SURFACE LAYER - RESIN LAYER, WAXED AND FULLY REACTED, TO 0.2mm (min) THICKNESS THROUGHOUT, AND FREE FROM VOIDS, AIR BUBBLES AND UNBOUND FIBRES.

B. MATERIALS:
1. RESIN - POLYESTER, EPOXIDE, FURAN OR VINYLESTER RESIN, WARRANTED BY THE MANUFACTURER FOR USE IN THE PROPOSED [illegible] water environment).
2. GLASS FIBRE - [illegible] GLASS FIBRES WITH LESS THAN 1% [illegible] CONTENT, COMPATIBLE WITH RESIN SYSTEM.
3. ADDITIVES - FILLERS, UV STABILIZER, COLOURING AGENTS, WAX AS REQUIRED TO PROVIDE COLOUR, FINISH AND CURING OF THE FINISHED COATINGS AND PHYSICAL PROPERTIES OF THE COMPOSITE.

C. GRP STRUCTURAL CONTENT:
1. GLASS FIBRE CONTENT.
    - WALLS - MINIMUM GLASS CONTENT 1500 GRAMS PER SQUARE METRE.
    - FLOORS - MINIMUM GLASS CONTENT 1200 GRAMS PER SQUARE METRE.
    - RIBS - MINIMUM GLASS CONTENT 600 GRAMS PER SQUARE METRE.
    - COPING - MINIMUM GLASS CONTENT 600 GRAMS PER SQUARE METRE.
2. RESIN CONTENT.
    - MINIMUM RESIN TO GLASS RATIO OF 2.25:1 BY WEIGHT TO BE ACHIEVED THROUGHOUT.
3. PHYSICAL PROPERTIES, CURED STRUCTURAL LAYER.
    - MINIMUM FLEXURAL STRENGTH - 160 MPa.

D. PLACEMENT AND CURING:
1. LAYUP - PLACE EACH LAYER IN ONE CONTINUOUS APPLICATION, WITH MINIMUM DELAYS BETWEEN APPLICATIONS. WORK IN WEATHER PROTECTED LOCATIONS, FREE FROM DUST, EXCESS MOISTURE AND EXTREMES OF TEMPERATURE.
2. CURING - ALLOW TO CURE TO NOT LESS THAN 80% OF ULTIMATE HARDNESS PRIOR TO HANDLING THE FINISHED PRODUCT.

Kaipara District Council
Approved Building Consent Document
BC210441 - Pg 43 of 46
20/08/2021
ComplyNZ

NOTE: FOR SOIL CLASSIFICATIONS OF 'H1', 'H2' & 'E' CLASS SOILS REFER TO CERTIFICATION LETTER (16-10261) FOR REQUIRED ADJUSTMENTS.

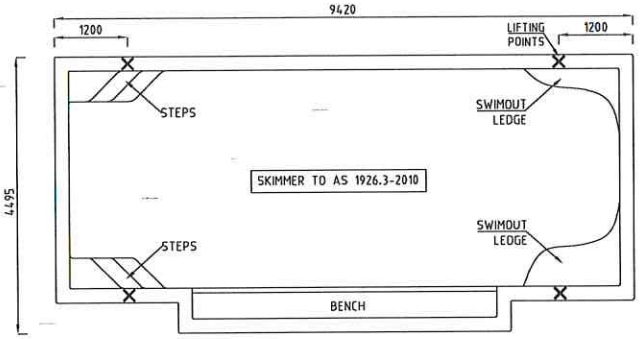

POOL PLAN - PRESIDENT
N.T.S

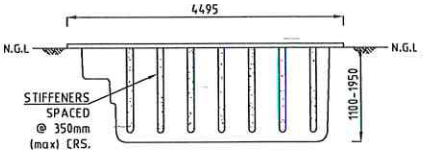

END ELEVATION
N.T.S

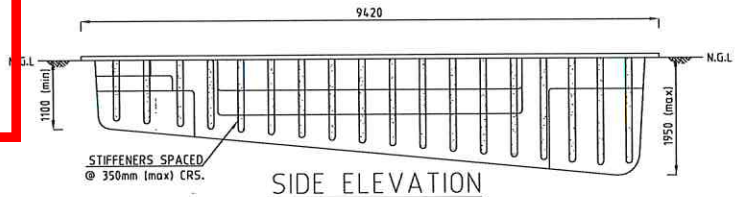

SIDE ELEVATION
N.T.S

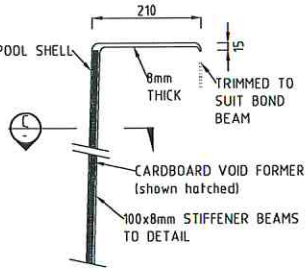

POOL EDGE BEAM DETAIL
N.T.S

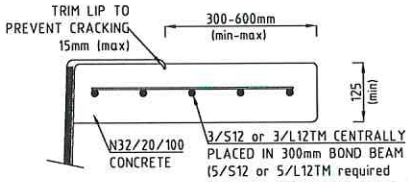

COPING BEAM DETAIL
N.T.S

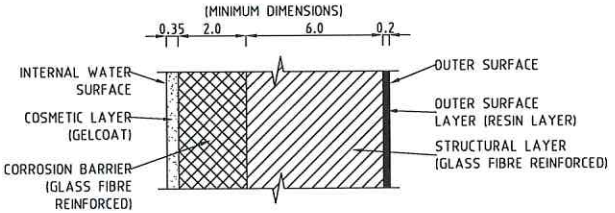

GRC COMPOSITE COMPONENTS
N.T.S

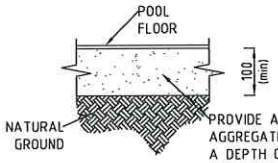

PROVIDE A LAYER OF UNBOUND, FREE DRAINING SAND OR AGGREGATE OF 6mm MAXIMUM PARTICLE SIZE, PLACED TO A DEPTH OF 100mm. CLAY, SILT AND ORGANIC MATERIALS MUST NOT FORM PART OF THE BEDDING LAYER. REFER SPECIFICATION FOR ADDITIONAL DETAILS.

POOL FOUNDATION PREPARATION - DETAIL
N.T.S

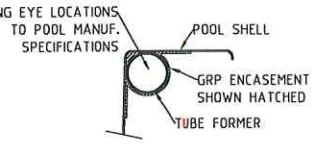

POOL LIFTING EYE
N.T.S

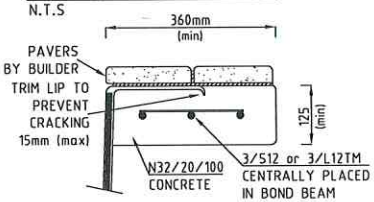

PAVER COPING
N.T.S

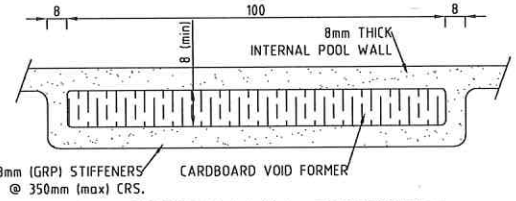

C - SECTION WALL STIFFENERS
N.T.S

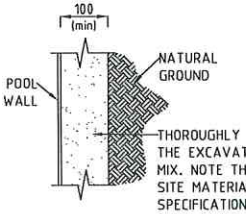

THOROUGHLY BACKFILL THE VOID BETWEEN THE POOL AND THE EXCAVATION WITH A CEMENT-STABILIZED-SAND DRY MIX. NOTE THAT IN NATURAL SAND SITES, FREE-FLOWING SITE MATERIAL MAY BE USED FOR BACKFILL. REFER SPECIFICATIONFOR ADDITIONAL DETAILS.

POOL BACKFILL DETAIL
N.T.S

DRAWING REVISIONS				REFERENCE DRAWINGS	
C	REVISED AS PER CLIENTS REQUEST	GAB	APR2019		
B	REVISED AS PER CLIENTS REQUEST	GAB	FEB2019		
A	REVISED AS PER CLIENTS REQUEST	GAB	JUL2017		
-	PRELIMINARY FOR CLIENT APPROVAL	GAB	MAR2016		
REV	DESCRIPTION	BY	DATE	DRAWING NAME	TITLE

COPYRIGHT
THESE DESIGNS, PLANS AND INFORMATION ARE COPYRIGHT AND ARE NOT TO BE USED OR REPRODUCED WHOLLY OR IN PART OR TO BE USED ON ANY PROJECT WITHOUT THE WRITTEN PERMISSION OF SUMMERMORE PTY LTD
DO NOT SCALE FROM THESE DRAWINGS.

SIGNED APPROVAL		
APPROVED		2APR2019
RPEQ	6715	
REVIEWED		
DESIGNED	RAB	APR2019
DRAWN	GAB	APR2019
SCALE	AS SHOWN	

ORIGINAL DRAWING SIZE at A3

Summermore Pty Ltd
Consulting Engineers
ACN: 108 898 433
ABN: 42 108 898 433
ron@summermore.com.au
www.summermore.com.au
PO Box 1671
Browns Plains BC, QLD, 4118
Phone: 07 3800 0973
Fax: 07 3800 1860

CLIENT
Freedom Pools
227 Sandy Creek Rd,
Yatala,
QLD, 4207.

Freedom POOLS • SPAS • LIFESTYLE
feel the freedom

PROJECT: Structural Details (Fibreglass Swimming Pool)
TITLE: PRESIDENT
DRAWING NUMBER: 16-10261-S01
REV: C

Kaipara District Council
Approved Building Consent Document

BC210441 - Pg 44 of 46

30/08/2021 ComplyNZ

Garden Design

PROJECT:
Kendall Residence
The Sanctuary
Robert Hastie Drive
Mangawhai 0573

LEGAL DESCRIPTION:
Lot #: 81
Deposited Plan: 556753
Area: 5903 m^2

DATE: 14/06/2021

PLAN #: 1 of 3

All planting external of the pool fence must be 1200mm clear of the pool fence

SITE PLAN



HOMESTEAD

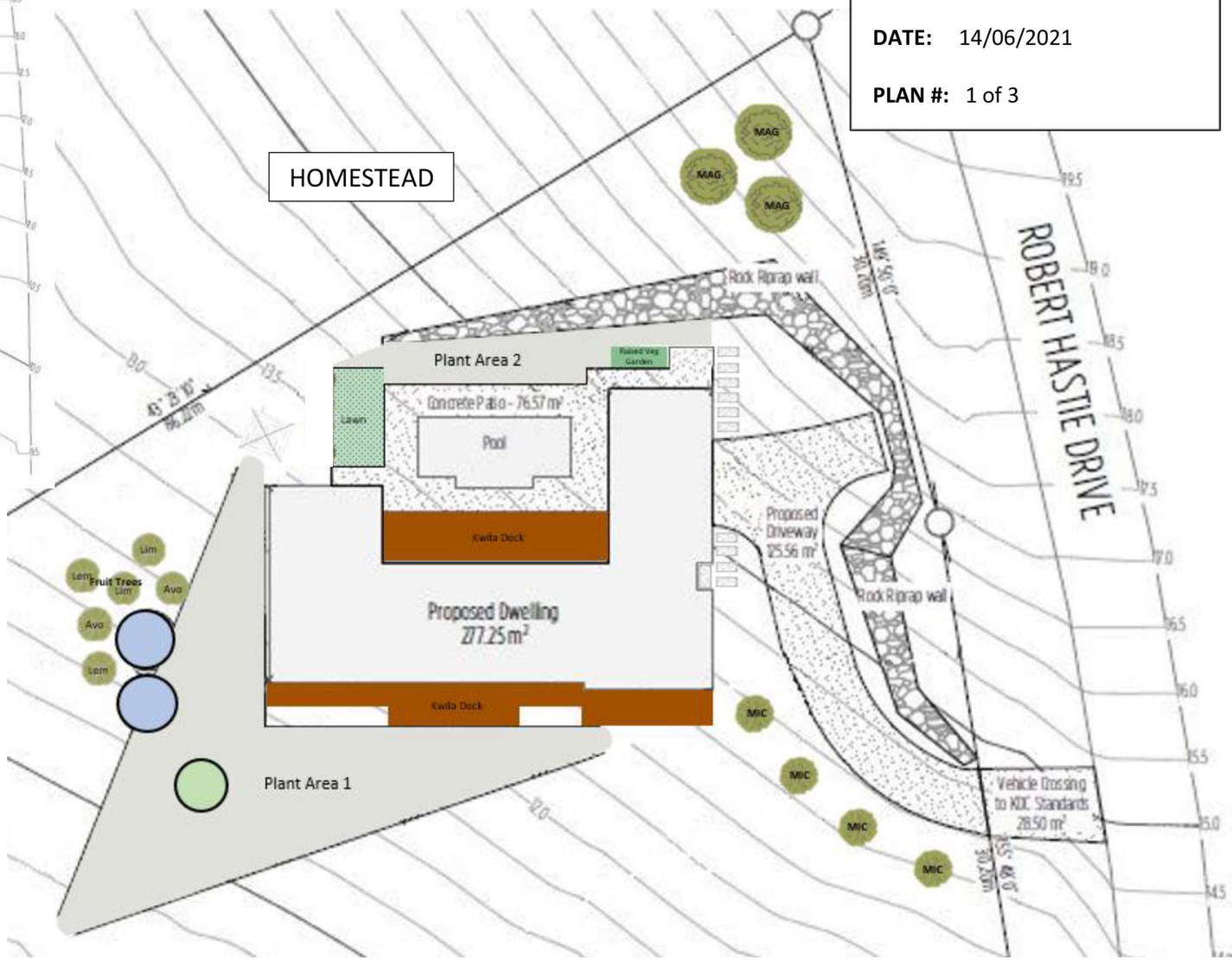

Currently Lot 81 is an undeveloped section and this concept landscape design is indicative of with what is envisaged the after earthworks and construction has been completed. All dimensions and the number of required plantings have been estimated.

It is recommended that the best months for planting are in the autumn months of April to May or late winter/spring, August to September.

Garden Design

PROJECT:
Kendall Residence
The Sanctuary
Robert Hastie Drive
Mangawhai 0573

LEGAL DESCRIPTION:
Lot #: 81
Deposited Plan: 556753
Area: 5903 m^2

DATE: 14/06/2021

PLAN #: 2 of 3

Kaipara District Council
Approved Building Consent Document

BC210441 - Pg 45 of 46

30/08/2021 ComplyNZ

Plant Area 1

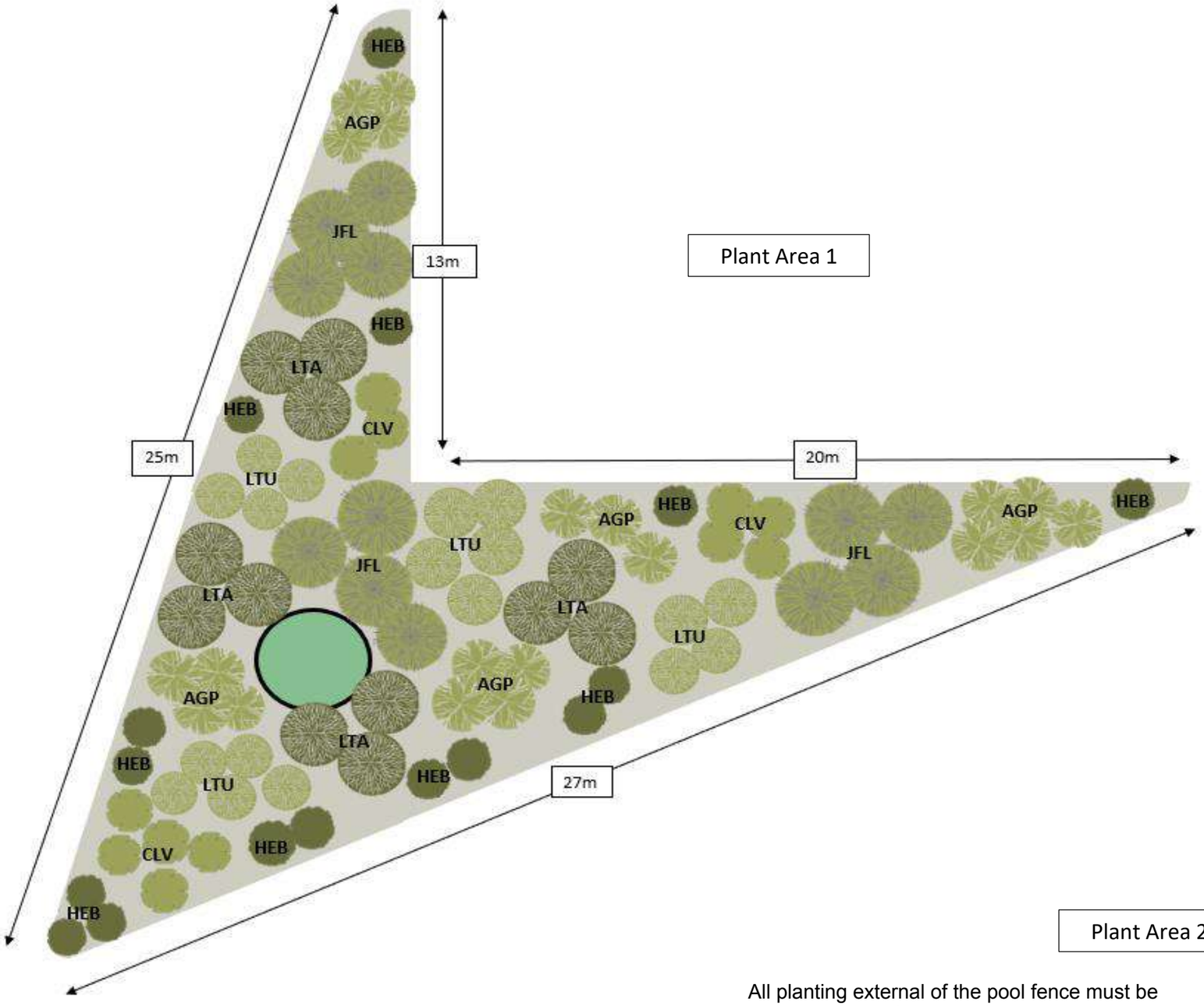

Plant Area 2

All planting external of the pool fence must be 1200mm clear of the pool fence

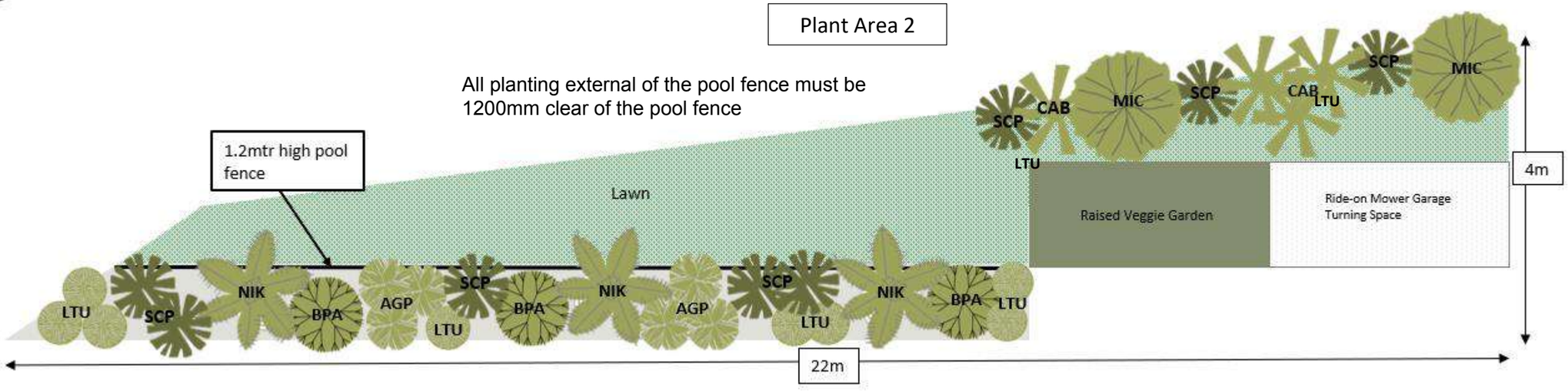

Ref Code	Symbol	Plant Description	Visual Example	Number Required
BPA	BPA	**Bird of Paradise (Strelitzia Reginae)** *Popular clump-forming perennial with deep green paddle-like leaves and the spectacular orange flowers with blue petals. 2m x 2m*		**3**
CLV	CLV	**Clivia Miniata Moon Glow/Fire Glow** *Ideal for mass planting under trees and shady areas. Half hardy.* *Grows to H 0.6m x W 0.6m*		**12**
HEB	HEB	**Hebe Diosmifolia 'Mauve'/'Caledonia'** Hebe Diosmifolia Mauve. Compact growing Hebe. Looks good as a small. Prefers free draining soil. Produces Mauve soft lilac flowers over spring.		**16**
AGP	AGP	**Agapanthus Peter Pan/Pavlova/Tinkerbell** *Colourful sterile Agapanthus are great for mass planting. Flowers late spring through to late summer. Trouble free and easy to grow in sun or part shade. Perennial. Hardy.* *Grows to H 50cm x W 50cm*		**40**
LTU	LTU	**Lomandra Lime Tuff** *Fine, lime-green foliage that produces small yellow flowers in summer. Hardy and tolerates frost, dry conditions and thrives well in part shade to full sun. Tolerates most types of soil and is suitable for mass planting as a groundcover. Ideal for growing in coastal conditions.* *Grows to H 45cm x W 45cm*		**33**

Ref Code	Symbol	Plant Description	Visual Example	Number Required
LTA	LTA	**Lomandra Longfolia Tanika** *Lomandra Tanika is a low maintenance. It is almost drought resistant, remaining lush and green in any conditions. Perfect for mass landscape plantings. grows to H 60cm x W 1m.*		**12**
JFL	JFL	**Phormium Jester Flax** *This cultivar has leaves that have a bright pink central band and edged with a bright green margin. The leaves are slightly arching. Thrives in a wide range of conditions.* *Grows to H 0.9m x W 0.9m*		**12**
MIC	MIC	**Michelia Gracipes** *Hardy and easy to grow, evergreen with creamy white flowers during winter and spring. Makes a great hedge or specimen tree. Suitable for sunny or semi-shaded position. Tolerates frosty conditions. Grows to H 2m x W 2m.*		**4**
CAM	CAM	**Camellia Sasanqua** – Various colours for hedging and specimen planting e.g. Plantation Pink/ Paradise Vanessa/ Rose Ann *Hardy shrubs suited to many uses as fillers or hedges and provide colour in winter months. Grows to H 2.5 x W 2m*		**6**
MAG	MAG	**Magnolia Grandiflora Little Gem** *Popular evergreen with a compact upright growth habit. Glossy dark green foliage with rusty bronze undersides. Hardy. Grows to H 5 x W 5m*		**3**

Ref Code	Symbol	Plant Description	Visual Example	Number Required
NIK	NIK	**Pitt Island Nikau (Rhopalostylis sapida)** *The Pitt Island Nikau is much faster growing than the NZ mainland native. Hardy and stronger than other Nikau. Very tidy habit.*		**3**
CAB	CAB	**Cabbage Trees (Cordyline australis)** *Suitable for group planting or single specimen. Extremely hardy – average soil, moist or dry tolerant, full sun to part shade and both wind and frost tolerant.* *Grows to H 5m x W 2.5m*		**9**
SCP	SCP	**Sugar Cane Palm – Dypsis baronii** *Multi stemmed, clumping habit. Stems are red/purple when young, changing to green/yellow when mature. Tolerant of light frost. Mature height to 3m.*		**12**
LEM LIM AVO		**Fruit Trees** Lemon, Lime & Avocado **Lemon Meyer Lemon** *The most popular lemon for the home orchardist. This lemon is tolerant of cooler conditions. Grows to H 2.5m x W 2.5m* **Tahitian Lime** *Full sun, well-drained soil. Cold hardy. Fragrant flowers. Evergreen foliage. Self-fertile.* **Avocado Reed** *An evergreen tree, Fruit mature from February through June. Predominantly self fertile. Prune to shape and size.*		**6**

PROJECT: Kendall Residence
The Sanctuary
Robert Hastie Drive
Mangawhai 0573

Garden Design

LEGAL DESCRIPTION:
Lot #: 81
Deposited Plan: 556753
Area: 5903 m^2

Date: 14/06/2021

Plan #: 3 of 3

Kaipara District Council
Approved Building Consent Document
BC210441 - Pg 46 of 46
30/08/2021 ComplyNZ

KDC - Approved Building Consent Document - BC210441 - Pg 1 of 512 - 30/08/2021 - ComplyNZ

Kaipara te Oranganui

KAIPARA DISTRICT

Two Oceans Two Harbours

Approved Building Consent Documents

Please note: A copy of the stamped, approved documents must be available onsite for **all** inspections.

DEVAN
TANKS



KDC - Approved Building Consent Document - BC210441 - Pg 2 of 512 - 30/08/2021 - ComplyNZ

PROUDLY
MADE IN TAURANGA
SINCE 1992



Devan Tanks are developed, designed and produced to the highest standards for New Zealand conditions.

www.devan.co.nz

WHY CHOOSE DEVAN?

Devan pioneered New Zealand's first large volume plastic water tank with the first development starting in the late 1980's.

Since then Devan has gone on to develop a full range of water tanks, septic tanks, wastewater systems and key accessories to assist with all your water based needs.

Devan Tanks are only manufactured from the highest quality polyethylene which is ideally suited to our moulding technique giving long life and trouble free service.

KDC - Approved Building Consent Document - BC210441 - Pg 3 of 512 - 30/08/2021 - ComplyNZ

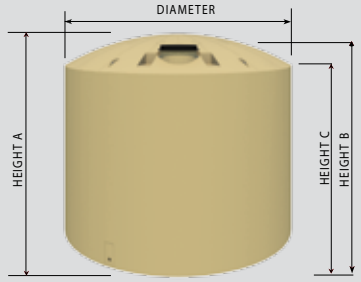

TT30 - 30,000 Litres

DIAMETER: 3.7 metres
HEIGHT A: 3.1 metres
HEIGHT B: 2.9 metres
HEIGHT C: 2.7 metres
WEIGHT: 475 kg
MANWAY: 435mm
OUTLETS: 2 x 50mm
THREAD: Brass BSP

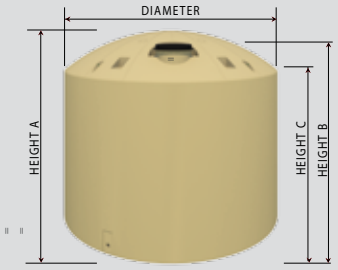

TT25 - 25,000 Litres

DIAMETER: 3.5 metres
HEIGHT A: 3.0 metres
HEIGHT B: 2.8 metres
HEIGHT C: 2.5 metres
WEIGHT: 375 kg
MANWAY: 435mm
OUTLETS: 2 x 50mm
THREAD: Brass BSP

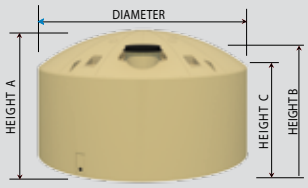

TT15 - 15,000 Litres

DIAMETER: 3.5 metres
HEIGHT A: 2.0 metres
HEIGHT B: 1.8 metres
HEIGHT C: 1.6 metres
WEIGHT: 250 kg
MANWAY: 435mm
OUTLETS: 2 x 50mm
THREAD: Brass BSP

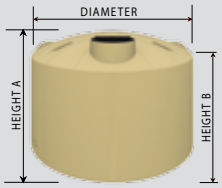

TT03 - 3,500 Litres

DIAMETER: 2.0 metres
HEIGHT A: 1.3 metres
HEIGHT B: 1.1 metres
WEIGHT: 65 kg
MANWAY: 383mm
OUTLETS: 1 x 50mm
THREAD: Brass BSP

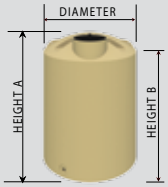

TT02 - 2,000 Litres

DIAMETER: 1.4 metres
HEIGHT A: 1.8 metres
HEIGHT B: 1.6 metres
WEIGHT: 50 kg
MANWAY: 383mm
OUTLETS: 1 x 50mm
THREAD: Brass BSP

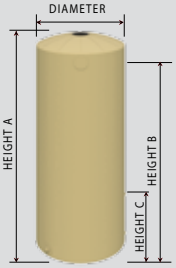

TT01 - 1,000 Litres

DIAMETER: 0.87 metres
HEIGHT A: 2.0 metres
HEIGHT B: 1.8 metres
HEIGHT C: 0.4 metres
WEIGHT: 35 kg
MANWAY: 150mm
OUTLETS: 2x50mm & 2x15mm
THREAD: Brass BSP

OUR 20 YEAR GUARANTEE

Devan Tanks offers a no nonsense 20 year guarantee on all our domestic water tanks. Our tanks are manufactured to the highest standards utilising advanced technology and production procedures. Full installation guides are available to ensure your installation meets the warranty conditions.



MOULDED OUTLETS

Devan Tanks are the only tank that comes with brass (or stainless steel) moulded in outlets. Having metal outlets allows for an easy plumb that is solid and eliminates any risk of cross threading. Better yet, our big tanks come with two of them as standard!

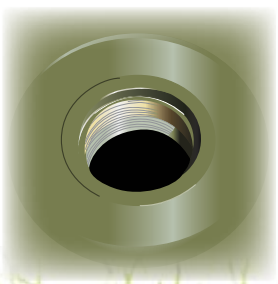

Devan Colours	Dark Green	Olive Green	Mist Green	Black	Beige	Birch Grey	Light Grey	Slate Grey	Mountain Blue	White	Clay Brown
Colorsteel Colours	Permanent Green	Karaka	Mist Green	Ebony	Desert Sand	Cloud	Gull Grey	Iron Sand	Denim Blue	White	Lignite

Please note that the colours represented above are the best match possible within screen and printing variations. Colorsteel colours are a guide only not colour matches.

KDC - Approved Building Consent Document - BC210441 - Pg 4 of 512 - 30/08/2021 - ComplyNZ

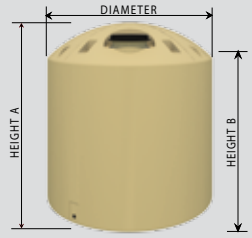

TT10 - 10,000 Litres

DIAMETER: 2.5 metres
HEIGHT A: 2.6 metres
HEIGHT B: 2.2 metres
WEIGHT: 225 kg
MANWAY: 435mm
OUTLETS: 2 x 50mm
THREAD: Brass BSP

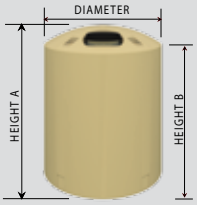

TT05 - 5,500 Litres

DIAMETER: 1.9 metres
HEIGHT A: 2.3 metres
HEIGHT B: 2.0 metres
WEIGHT: 112.5 kg
MANWAY: 435mm
OUTLETS: 1 x 50mm
THREAD: Brass BSP

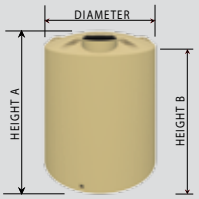

TT04 - 4,000 Litres

DIAMETER: 1.7 metres
HEIGHT A: 1.9 metres
HEIGHT B: 1.8 metres
WEIGHT: 75 kg
MANWAY: 383mm
OUTLETS: 1 x 50mm
THREAD: Brass BSP

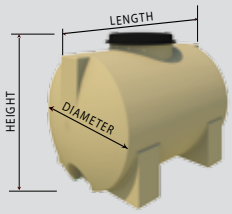

TT007 - 750 Litres

LENGTH: 1.3 metres
HEIGHT: 1.0 metres
DIAMETER: 0.9 metres
WEIGHT: 30 kg
MANWAY: 435mm

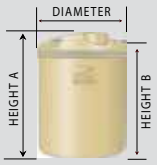

TT006 - 600 Litres

DIAMETER: 0.86 metres
HEIGHT A: 1.2 metres
HEIGHT B: 1.1 metres
WEIGHT: 20 kg
MANWAY: 190mm
OUTLET: 1 x 50mm
THREAD: Brass BSP

FREE DELIVERY
ALL SIZES WITHIN NORTH ISLAND

CERTIFIED VPLAS MATERIAL

CERTIFIED MATERIAL

Devan Tanks are manufactured from the highest quality food grade polyethylene which is ideally suited to our moulding technique giving long life and trouble free service. Polyethylene cannot rot or corrode, and is ultra violet stabilised for New Zealand's harsh environmental conditions. It will not leach or taint your drinking water.

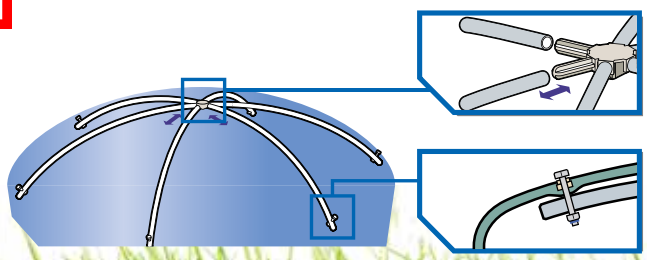

SUPER-STRONG DOME

The unique Devan Spaceframe provides for maximum strength in the dome of your tank which means it won't pop in when you are installing or servicing your tank nor will extreme snow loading have an effect. (Large tanks only)

ACCESSORIES

Devan have carefully selected a few key accessories to assist with your water collection, storage and use needs. Give some thought to what you may need to go with your tank and talk to one of the friendly team when ordering.








- First flush diverters
- Leaf/debris diverters
- Level indicators/gauges
- Plumbing kits
- Water pumps
- Pump Covers
- Uniseals
- UV systems
- Overflow kits
- Tank vents
- Float valves
- Connector kits

KDC - Approved Building Consent Document - BC210441 - Pg 5 of 512 - 30/08/2021 - ComplyNZ

DEVAN TANKS

Tauranga Factory & Sales
PO Box 2602
125 Birch Avenue
Tauranga
Phone: 07 578 8726
Free Phone: 0800 338 268
Email: tauranga@devan.co.nz

Buy online or find more information @ www.devan.co.nz

KDC - Approved Building Consent Document - BC210441 - Pg 6 of 512 - 30/08/2021 - ComplyNZ

DEVAN

Installation & Maintenance Guide

Devan Water Tanks



Please read these guidelines before installation begins.

Failure to properly prepare and install your tank correctly or continue with ongoing maintenance will void your warranty.

V1.1

KDC - Approved Building Consent Document - BC210441 - Pg 7 of 512 - 30/08/2021 - ComplyNZ

CONTENTS

DELIVERY OF YOUR DEVAN TANK	Page 3
FOUNDATION AND LOCATION	Page 4
BOTTOM OUTLET PLUMBING GUIDELINES	Page 6
TOP PLUMBING	Page 8
WATER PUMP INSTALLATION	Page 10
WARRANTY POLICY	Page 11
WATER TANK DIMENSIONS	Page 14
CLEANING AND MAINTENANCE	Page 17
WARRANTY REGISTRATION	Page 20

Devan Water Tanks. Made in New Zealand for New Zealand Conditions!

In order to gain maximum benefit from your Devan water tank, we have outlined the following instructions for installation and setup. Please read all these instructions carefully before installing your tank. The tank warranty will be void if the installation instructions are not adhered to.

DELIVERY OF YOUR DEVAN TANK

Devan water tanks are delivered by road to your gate. Transportation to the actual site and installation is the risk and responsibility of the purchaser. Where there is easy and suitable road access, our drivers may agree to off-load closer to the installation site, however this will be at the purchaser's risk. On arrival please make sure that somebody is available to help our drivers off-load your tank.

Our drivers will phone the person nominated at the time of order on the morning of delivery to confirm details. They will advise an approximate delivery time. If the driver is unable to get hold of the nominated contact person, the tank will be off-loaded at the most convenient location at the site and it will be the purchasers responsibility to relocate the tank at their risk and responsibility.

If you have special access issues, please make sure these are made known either to the Devan sales team or to the driver. Examples of such issues include truck only access in tight spaces, farm gate entry as opposed to main driveway or tanker track entry or no wet weather access.



KDC - Approved Building Consent Document - BC210441 - Pg 8 of 512 - 30/08/2021 - ComplyNZ

KDC - Approved Building Consent Document - BC210441 - Pg 9 of 512 - 30/08/2021 - ComplyNZ

FOUNDATION AND LOCATION

A full Devan tank is extremely heavy (up to 30 tonnes). Be thoughtful in selecting your tank location.

When installing the Devan tank, choose a firm and level area that is free from any projections. Elevated locations must have a solid floor and be strong enough to withstand wind loads in conjunction with the weight of a full tank.

A level foundation is required for tanks 5,000 litres and larger. Concrete, quarry fines (<7mm), pumice and sand are all suitable.

Sand is the recommended option. The sand base needs to be 100mm deep, 500mm greater than the tank diameter and most importantly, free from any sharp objects or projections such as rocks, roots or stones.

The sand base must be retained at all times. Pipe tank overflow well clear of the sand base to ensure overflowing water does not aid erosion.

In high wind areas such as hilltops, the Devan tank can be secured to the ground using all four lifting lugs. Do not overtighten the tie-downs or damage will result.

Devan water tanks are not designed for in-ground installation but can be buried up to 500mm and back filled with clean fill. If further depth is required tanks must not be buried any further than a maximum of 1000mm below ground level keeping a free space of at least 500mm around the tank. This space should have drainage installed and the gap filled with bark so it is not a trap hazard for small animals or children.

Devan tanks can be recessed into banks or similar, providing the tank is not backfilled against and there is free space of at least 500mm around the tank.

Do not install water tanks over buried pipes, cables or any other utility connections which may require servicing or maintenance.

Do not install water tanks over underground structures such as cellars, septic tanks, sewage canals, etc.

Do not install water tanks where they could pose a potential hazard to life or property. eg under foundations or within a building.

KDC - Approved Building Consent Document - BC210441 - Pg 10 of 512 - 30/08/2021 - ComplyNZ

FOUNDATION AND LOCATION - CONTINUED

In areas prone to rabbit or other burrowing animals it is advisable to bury wire mesh to a depth of at least 600mm in a narrow trench around the foundation parameter.

In areas where livestock have access to the tank, the area surrounding the tank should be fenced to a minimum of 1.0 metre from the tank, to avoid any damage to the tank wall or outlet fittings.

Where the tank needs to be lifted into place, all four lifting eyes must be used in doing so. The lifting eyes are not rated sufficiently to be used with any water in the tank.

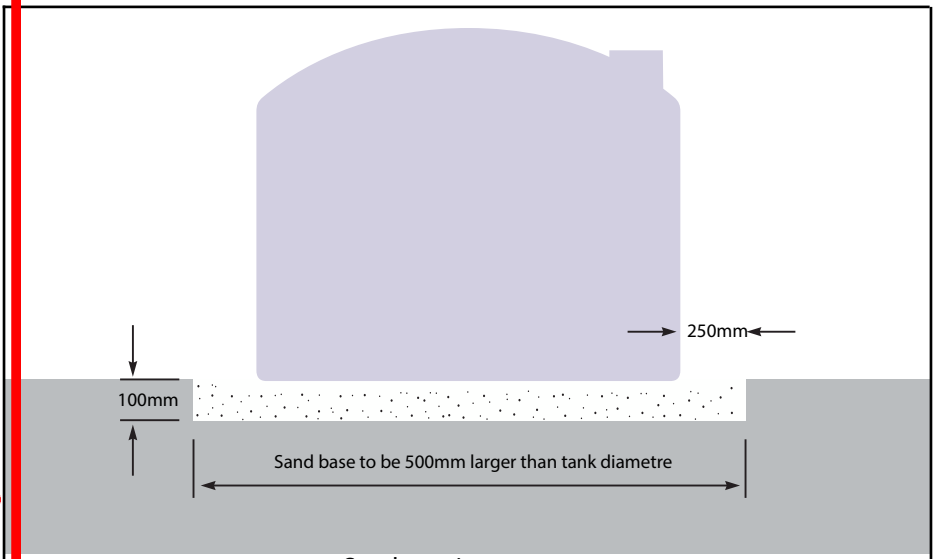

Sand requirements

30,000L	1.4m3
25,000L	1m3
15,000L	1m3
10,000L	0.75m3
5,000L	0.50m3

KDC - Approved Building Consent Document - BC210441 - Pg 11 of 512 - 30/08/2021 - ComplyNZ

BOTTOM OUTLET PLUMBING GUIDELINES

Bungs are screwed in loosley for transport only. If used permanently, please remove the bung and Teflon tape the threads and screw back in. Do not overtighten the bungs if they are to be refitted. This procedure must be completed before filling the tank.

Because polyethylene water tanks expand when full, plumbing to the tank must be flexible. Tanks will expand 30 to 40mm from new when filled for the first time. Tanks will contiune to expand up to 100mm over their life span.

All plumbing attached to the bottom of the tank must be done correctly with all base connections flexible and free from stress. Plumbing kits are recommended and are available from Devan in 25mm, 32mm and 50mm sizes.

Polyethylene pipe does not constitute flexible plumbing. Flexi-hose needs to be used to provide sufficient flexibility.

No extra penetrations are to be cut into the walls of the tank without written approval of the manufacturer. Doing so will seriously affect the structural integrity of the tank and could lead to premature failure.

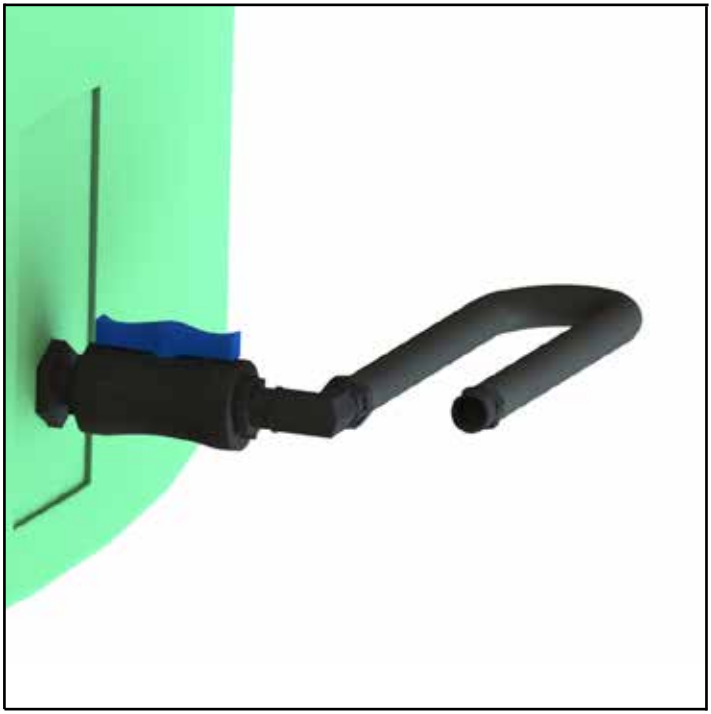

25mm Plumbing Kit - TAKPL25

BOTTOM OUTLET PLUMBING GUIDELINES - CONTINUED

There are specially designed mounting areas on the wall of the tank for outlet plumbing with brass fittings moulded-in for extra plumbing strength. These fittings are pre-drilled and tapped ready for use. These moulded-in fittings are raised off the bottom of the tank to prevent sludge pick-up and to retain sufficient weight (up to approx. one tonne in large tanks) making the tank more stable in exposed areas.

It is not recommended to install tank fittings anywhere else in the tank wall as this will create a stressed point in the tank structure and void the warranty. If an outlet fitting is required at a specific level, connect an internal vertical pipe to the desired level from the inside of the provided wall mounted outlet. These Restricted height outlets are available for purchase from Devan.

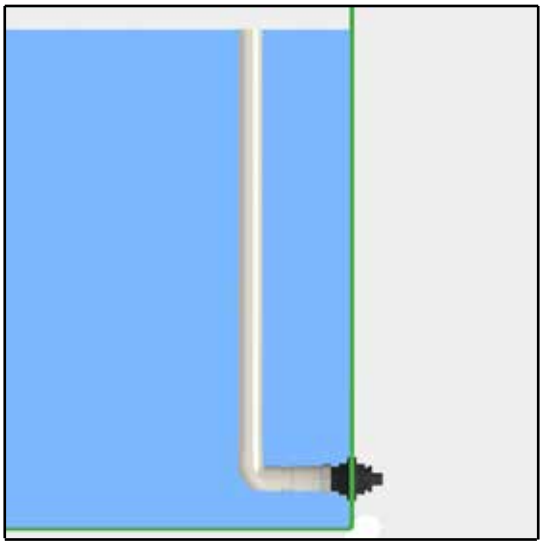

25mm Restricted Height outlet - RO25

All pipe fittings larger than 25mm must be supported independently to minimise stress on base. Please use only appropriate PVC or polyethylene fittings and make sure that all joints are flexibale and are well sealed and watertight with no light penetration.

Where a bottom outlet fitting of over 50mm is required it is strongly recommended that the tank be upgraded to heavy duty or extra heavy duty to accommodate the high-use nature of the application. If a larger fitting is installed in a standard tank it will void the warranty.

Any aftermarket fittings installed in the tank wall or base will void warranty.

KDC - Approved Building Consent Document - BC210441 - Pg 12 of 512 - 30/08/2021 - ComplyNZ

KDC - Approved Building Consent Document - BC210441 - Pg 13 of 512 - 30/08/2021 - ComplyNZ

TOP PLUMBING

Connecting to the dome

There are specially designed mounting areas on the dome of the tank, for inlet and overflow plumbing. We recommend the use of Universal seals® with all top plumbing and care should be taken when drilling the corresponding hole size. Proper hole saws must be used.

Universal seals® are available from Devan (25mm to 100mm).
The overflow should be piped away from the foundation to avoid erosion.

Overflows

An overflow must be installed in all instances to let excess water out of the tank. This is also important if the tank is filled from a float valve in case it sticks open.

A 'Hockey stick' shaped overflow will not provide sufficient out flow in instances of heavy rain and failure to allow could lead to the tank dome eventually vacuuming in.

Ninety degree overflow and vent pipe work is essential.



Rainwater Tank - example

KDC - Approved Building Consent Document - BC210441 - Pg 14 of 512 - 30/08/2021 - ComplyNZ

TOP PLUMBING - CONTINUED

Venting

It is essential that you have more than adequate overflow and air venting for your operating conditions. Air and water must be able to exit the tank at the combined maximum rate that it can enter. If the tank is not sufficiently vented it will inevitably suck in the dome of the tank which will cause the tank to fail prematurely.

For high flow situations such as a wash down tank at a cowshed an appropriate size vent must be installed in the dome.

Venting options are available from Devan.



100mm Overflow vent kit- TAKOV100

KDC - Approved Building Consent Document - BC210441 - Pg 15 of 512 - 30/08/2021 - ComplyNZ

WATER PUMP INSTALLATION

Do not directly install water pumps to the side of your water tank. The water pump and its motor must be self-supported on its own mount and connected to the tank via flexible hose to isolate any vibration or movement by the pumping unit itself. The tank outlet areas and their fittings must not be stressed by the weight of the water pump, motor or plumbing.

Remember to allow more than adequate overflow and venting when water pumps are used. Air and water must be able to enter or escape the tank at the same rate the water is being pumped in or out. Use the top plumbing areas when attaching overflow or vent plumbing to your water tank.

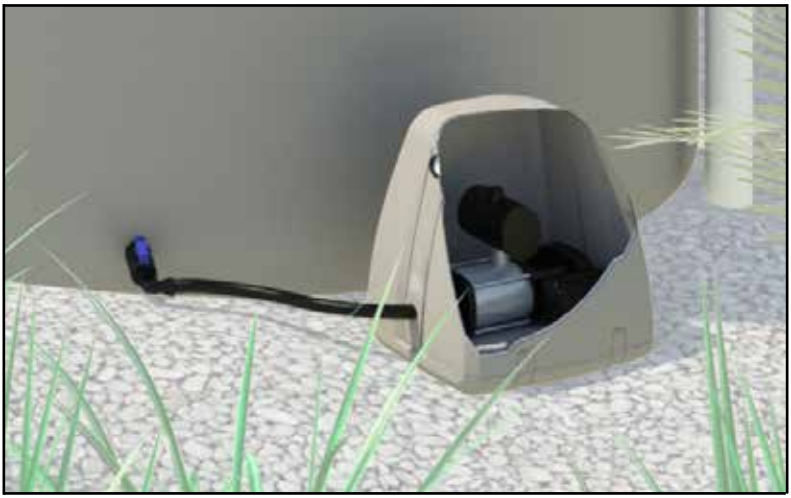

25mm Plumbing kit with Pump and Cover

KDC - Approved Building Consent Document - BC210441 - Pg 16 of 512 - 30/08/2021 - ComplyNZ

WARRANTY POLICY

Your Devan product has been manufactured to the highest standards utilising advanced technology and production procedures. Devan Plastics Limited ("Devan") offers a warranty to the original purchaser that their products to be free of defects in workmanship or materials for the period defined in Appendix A, provided the provisions detailed below have been complied with.

A third party manufacturers' warranty applies to all other components used in the manufacture of Devan products. Third party manufacturer's warrant their products are free from defects in material and workmanship at the time of shipment and will make good, by repair or at its option replacement, any defects which occur during the warrantable period as defined in Appendix A provided the provisions below have been complied with.

Necessary provisions

In order for a warranty claim to be accepted by Devan or a third party manufacturer the following provisions must be met:

1) The equipment was correctly installed and in proper use as was intended by the manufacturer in accordance with the Installation and operating instructions supplied, and generally accepted code of practice or national standard/s.

2) The warranty period (as defined in Appendix A) from the date of invoice to the end user has not lapsed.

3) The claim for goods under warranty arises solely from faulty material or manufacturers' workmanship.

4) The customer or agent of the customer must return goods under warranty (where appropriate), stating the date and place of purchase promptly and within the product warranty period.

5) No repairs must be entered into by anybody other than a specified distributor or repairer as agreed and appointed by Devan.

6) Devan must be given a reasonable opportunity to inspect the tank and, if deemed necessary by Devan to have an independent engineering or other expert analysis of the cause of failure carried out.

Exclusions

Both the Devan warranty and third party manufacturer's warranty do not cover the following exclusions:

WARRANTY - CONTINUED

1) Except where otherwise stated by law, the manufacturer shall not be under liability for any injury, damage, or loss, including consequential damage or loss resulting from the use of its products, or resulting from defects therein. This may specifically refer to the cost of but not limited to lifting, installation, electrical or plumbing requirements.

2) Damage caused by abnormal operating conditions, war, violence, cataclysm, or any force majeure.

3) Damage caused by the equipment being used for an application for which it is not manufactured or recommended by the original manufacturer or Devan.

4) Damage caused by sand or abrasive materials, corrosion due to salt water, hazardous liquids, electrolytic action, and liquid temperatures beyond the recommended range, cavitation, and improper power supply voltage or outages.

5) Attempted repair, dismantling or any other tampering with any component of the system without the prior written approval of Devan will void any warranty.

6) If the Devan product or third party component has not been maintained in accordance with Devan.

7) Ingress of water or insect infestation to electrical components due to post-manufacture electrical penetrations not being appropriately protected.

8) Incorrect installation or negligent practices of the installer of the product.

9) Tank colour that may change or fade over time.

10) Any transport, insurance and freight costs.

This warranty does not exclude any condition or warranty implied by the Consumer Guarantees Act 1993, Fair Trading Act 1986, and the Commerce Act 1986 and is in addition to any rights the purchaser may have at law.

KDC - Approved Building Consent Document - BC210441 - Pg 17 of 512 - 30/08/2021 - ComplyNZ

Appendix A - Product warranty periods

Product	Warranty Period
Water tanks (residential)	20 years
Water tanks (commercial)	10 years
Water tanks (custom made outlets - > 100mm)	1 year
Molasses tanks	10 years
Septic tanks	15 years
WWTS vessels	15 years
Grease traps	10 years
Flout tank	10 years
Detention/retention tanks	15 years
Drums	1 year
Refuse bins	1 year
Industrial bins	1 year
Third party components (WWTS)	1 year
Third party components (other)	1 year
Grundfos pumps	2 years

KDC - Approved Building Consent Document - BC210441 - Pg 18 of 512 - 30/08/2021 - ComplyNZ

KDC - Approved Building Consent Document - BC210441 - Pg 19 of 512 - 30/08/2021 - ComplyNZ

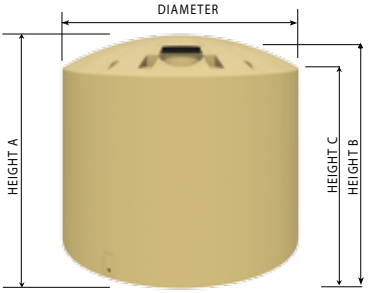

TT30 - 30,000 Litres

DIAMETER: 3.7 metres
HEIGHT A: 3.1 metres
HEIGHT B: 2.9 metres
HEIGHT C: 2.7 metres
WEIGHT: 475 kg
MANWAY: 435mm
OUTLETS: 2 x 50mm
THREAD: Brass BSP

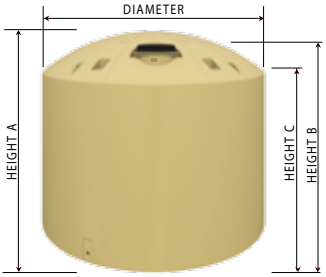

TT25 - 25,000 Litres

DIAMETER: 3.5 metres
HEIGHT A: 3.0 metres
HEIGHT B: 2.8 metres
HEIGHT C: 2.5 metres
WEIGHT: 375 kg
MANWAY: 435mm
OUTLETS: 2 x 50mm
THREAD: Brass BSP

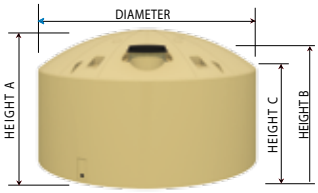

TT15 - 15,000 Litres - NORTH ISLAND

DIAMETER: 3.5 metres
HEIGHT A: 2.0 metres
HEIGHT B: 1.8 metres
HEIGHT C: 1.6 meters
WEIGHT: 250kg
MANWAY: 435mm
OUTLETS: 2 x 50mm
THREAD: Brass BSP

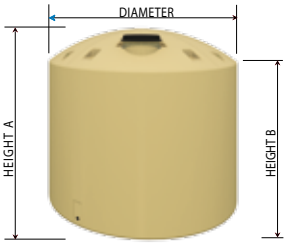

TT15 - 15,000 Litres - SOUTH ISLAND

DIAMETER: 2.9 metres
HEIGHT A: 2.6 metres
HEIGHT B: 2.2 metres
WEIGHT: 275 kg
MANWAY: 435mm
OUTLETS: 2 x 50mm
THREAD: Brass BSP

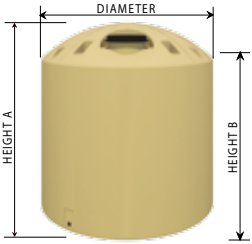

TT10 - 10,000 Litres - NORTH ISLAND

DIAMETER: 2.5 metres
HEIGHT A: 2.6 metres
HEIGHT B: 2.2 metres
WEIGHT: 225 kg
MANWAY: 435mm
OUTLETS: 2 x 50mm
THREAD: Brass BSP

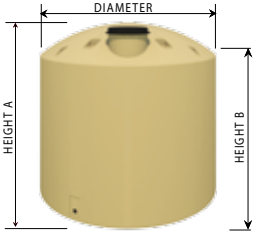

TT10 - 10,000 Litres - SOUTH ISLAND

DIAMETER: 2.6 metres
HEIGHT A: 2.4 metres
HEIGHT B: 2.1 metres
WEIGHT: 225 kg
MANWAY: 435mm
OUTLETS: 2 x 50mm
THREAD: Brass BSP

KDC - Approved Building Consent Document - BC210441 - Pg 20 of 512 - 30/08/2021 - ComplyNZ

WATER TANK DIMENSIONS - CONTINUED

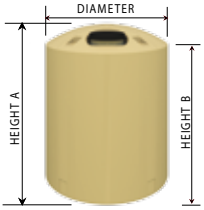

TT05 - 5,500 Litres - NORTH ISLAND

DIAMETER: 1.9 metres
HEIGHT A: 2.3 metres
HEIGHT B: 2.0 metres
WEIGHT: 112.5 kg
MANWAY: 435mm
OUTLETS: 1 x 50mm
THREAD: Brass BSP

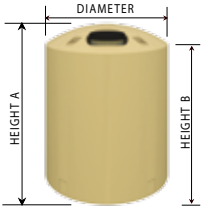

TT05 - 5,000 Litres - SOUTH ISLAND

DIAMETER: 1.9 metres
HEIGHT A: 1.9 metres
HEIGHT B: 1.8 metres
WEIGHT: 100 kg
MANWAY: 435mm
OUTLETS: 1 x 50mm
THREAD: Brass BSP

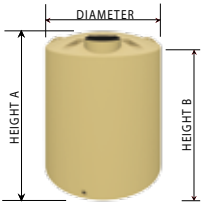

TT04 - 4,000 Litres

DIAMETER: 1.7 metres
HEIGHT A: 1.9 metres
HEIGHT B: 1.8 metres
WEIGHT: 75 kg
MANWAY: 383mm
OUTLETS: 1 x 50mm
THREAD: Brass BSP

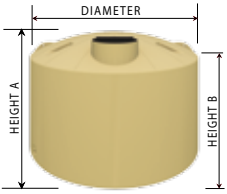

TT03 - 3,500 Litres

DIAMETER: 2.0 metres
HEIGHT A: 1.3 metres
HEIGHT B: 1.1 metres
WEIGHT: 75 kg
MANWAY: 383mm
OUTLETS: 1 x 50mm
THREAD: Brass BSP

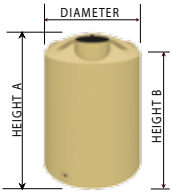

TT02 - 2,000 Litres

DIAMETER: 1.4 metres
HEIGHT A: 1.8 metres
HEIGHT B: 1.6 metres
WEIGHT: 50 kg
MANWAY: 383mm
OUTLETS: 1 x 50mm
THREAD: Brass BSP

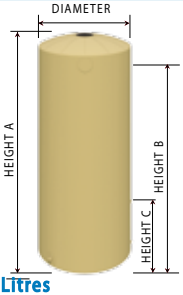

TT01 - 1,000 Litres

DIAMETER: 0.87 metres
HEIGHT A: 2.0 metres
HEIGHT B: 1.8 metres
HEIGHT C: 0.4 metres
WEIGHT: 35 kg
MANWAY: 150mm
OUTLETS: 2x50mm & 2x16mm
THREAD: Brass BSP

WATER TANK DIMENSIONS - CONTINUED

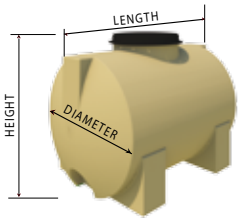

TT007 - 750 Litres

LENGTH: 1.3 metres
HEIGHT: 1.0 metres
DIAMETER: 0.9 metres
WEIGHT: 30 kg
MANWAY: 435mm

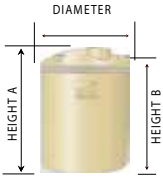

TT006 - 600 Litres

DIAMETER: 0.86 metres
HEIGHT A: 1.2 metres
HEIGHT B: 1.1 metres
WEIGHT: 20 kg
MANWAY: 190mm
OUTLET: 1 x 50mm
THREAD: Brass BSP



KDC - Approved Building Consent Document - BC210441 - Pg 21 of 512 - 30/08/2021 - ComplyNZ

Depending on the cleanliness of your water source, your water tank should be cleaned on a regular basis.

What can end up in my water?

Algae growth is a common occurrence in water tanks. Devan water tanks are manufactured to strict quality tolerances, meaning that no light can penetrate the tank which will eliminate any algae growth, as algae need light to exist. Sometimes the nature of an installation can change this whereby an installer may cut oversized holes for inlets or overflows/venting. Blocking up any points for light to enter the tank will reduce or eliminate algae growth in the tank.

External debris are a much more visible source of contamination that will either float on the top of the water, of form sediment on the bottom of the tank. Such contaminants will consist of leaf litter, bird droppings, dead insects and even animals. This debris will build up on the bottom of your tank and require removal periodically.

Cleaning frequency

Devan recommend that you clean your tank out at least annually; however it is important to inspect your water tank on a quarterly basis to assess the level of contamination. A quality installation with the right pretreatment accessories could mean your tank remains in immaculate condition for a number of years before requiring cleaning. Cleaning of your tank will either take a bunch of your time or money and so the less frequently you need to clean it, the better. If you are noticing the rapid build up of sediment on the bottom of your tank, investigate the options for pre-treatment.

Devan tanks have outlet locations positioned up off the bottom of the tank which means you are not drawing off the contaminated water at the bottom of the tank for your day to day consumption. This is a precautionary measure only and should not be relied upon to prevent organic material entering your water supply.

Tank cleaning options

Professional contractors

The Yellow Pages and other online sources will provide the details of people providing 'Water Tank Services'.

Depending on your proximity to the nearest service provider, this is not a terribly expensive exercise with reports of $200-$300 plus the cost of a tank of water, which varies dramatically around the country.

KDC - Approved Building Consent Document - BC210441 - Pg 22 of 512 - 30/08/2021 - ComplyNZ

KDC - Approved Building Consent Document - BC210441 - Pg 23 of 512 - 30/08/2021 - ComplyNZ

CLEANING AND MAINTENANCE - CONTINUED

Although a self clean (described below) is a relatively straight forward exercise, it can be very time consuming, while a contractor will have it done in a couple of hours.

Do it yourself

Warning: If you will be getting into the tank to clean it, make sure there is adequate ventilation, and you have another person present at all times in case something should go wrong. Working in confined spaces is dangerous and should not be attempted by an individual working alone.

Draining the tank down to the last 1-2 thousand litres through the spare outlet will concentrate all contaminants into the bottom of the tank. The quickest and easiest way to then remove the concentrated contaminants is to hire a wet vacuum system or pump and stir up all the debris with a soft broom, which will then be sucked out by the vacuum or pump.

Siphoning off sediments may also be done using an inverted funnel (described below) or pool vacuum cleaner, by dragging it along the bottom of the tank.



1) Start with a piece of flexible plastic tubing long enough to reach into your tank. Then fix an ordinary kitchen funnel to one end.



2) Fill the tube with water from a garden hose, making sure there are no air spaces present and the funnel is partially filled.



3) Block up the open end with a watertight seal and hold the funnel end vertical so the water stays contained in the tube.



4) If you are unable to enter the tank, attach the funnel to a long pole that you can manoeuvre through the tank opening.



5) When ready, plunge the funnel end into the tank water, then position the outside end in bucket and remove the stopper.



6) Water should begin to flow out the tank into the bucket, and you can now suck up any accumulated debris on the tank floor.

Devan would like to credit Gisborne District Council for some written content and the pictorial siphon instructions, and the Ministry of Health for some written content.

Attach stamp

Devan Plastics Limited
PO Box 2602
Tauranga 3140

FOLD

KDC - Approved Building Consent Document - BC210441 - Pg 24 of 512 - 30/08/2021 - ComplyNZ

7120 Hot & Cold Water System

Rheem HWC Specification

Ref 27868. Uploaded 23 Jun 2021

Purpose: Performance

KDC - Approved Building Consent Document - BC210441 - Pg 25 of 512 - 30/08/2021 - ComplyNZ

SPECIFICATIONS

MAINS PRESSURE – VITREOUS ENAMEL (VE)

KDC - Approved Building Consent Document - BC210441 - Pg 26 of 512 - 30/08/2021 - ComplyNZ

Product		Models											
Single Element Indoor		31202519V	31204515	31209015	31213513 31213515	32213515	31218013 31218015		32218015	31225015	31230015		
Twin Element (non-simultaneous) Indoor							31218025			31225025			
Dual Element (simultaneous) Indoor											31230033 31230055		
Optima Outdoor/Indoor								91318015					
Optima Twin Element (non-simultaneous) Outdoor/Indoor												91330025	49240G8
Approx. Storage Capacity	Litres	25	45	90	135	135	180	180	180	250	300	300	400
Boost Capacity (Twin Element)	Litres	-	-	-	-	-	45*	-	-	50**	50	47	90
Height	A (mm)	398	525	925	1325	935	1710	1720	1165	1555	1815	1820	1840
Width	B (mm)	400	490	490	490	580	490	490	580	580	580	580	690
	C (mm)	116	120	120	120	120	120	120	120	120	120	120	120
	D (mm)	32	65	65	65	65	65	-	65	65	65	-	105
	E (mm)	-	-	-	-	-	-	-	-	-	162	-	-
	F (mm)	-	-	-	-	-	1182*	-	-	1126**	-	1298	1323
	G (mm)	246	-	-	-	-	-	1546	-	-	-	1636	1479
	H (°)	45	45	45	45	45	45	36	45	45	45	36	97
Approx Weight Empty	Kg	15	26	38	49	54	60-62	64	64	80-82	91	97	113
Relief Valve Setting	kPa	1000	1000	1000	1000	1000	1000	1000	1000	1000	1000	1000	1000
Water Connections		RP ¾ /20	RP ¾ /20	RP ¾ /20	RP ¾ /20	RP ¾ /20	RP ¾ /20	RP ¾ /20	RP ¾ /20	RP ¾ /20	RP ¾ /20	RP ¾ /20	RP ¾ /20
Element Rating (@230V)	kW	2.0	3.0	3.0	2.0 or 3.0	3.0	2.0 or 3.0	3.0	3.0	3.0	3.0 or 5.0	3.0	4.8^

*31218025 only **31225025 only ^ @ 240V

Cylinder Dimensions

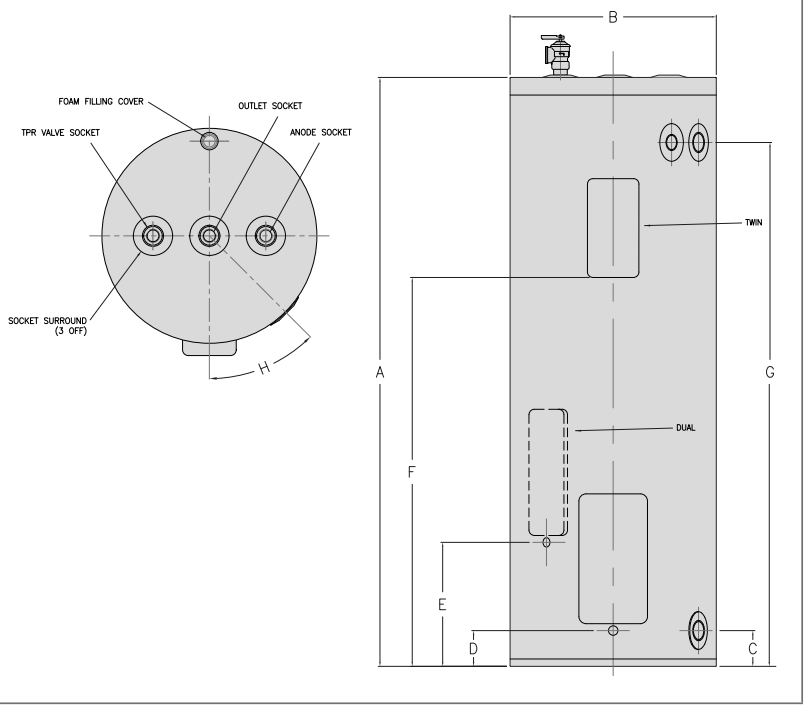

1. Inlet/Outlet and TPR valve are side mounted on left-hand side of 31202519V.
2. Inlet/outlet and TPR valve are side mounted on right-hand side of 91318015 and 91330025.

Specifications Electric (@230V)

kW	Recovery on a 50°C rise	AMPS
2.0 kW	34 litres per hr	8.7 A
2.4 kW	40 litres per hr	10.4 A
3.0 kW	51 litres per hr	13.1 A
3.6 kw	62 litres per hr	15.7 A
4.8 kW	82 litres per hr	21.0 A
5.0 kw	85 litres per hr	21.8 A
6.0 kW	103 litres per hr	26.1 A
2 × 3.0 kW	103 litres per hr	26.2 A
2 × 5.0 kW	171 litres per hr	43.6 A

Quality System
Quality Endorsed Company
ISO 9001
Lic. QEC 14766
SAI Global

CADetailer Ltd

SUPPORTING MANUFACTURER DOCUMENTATION
For information only. Specification and contract documentation takes precedence.
This version includes documents related to:
Performance | Installation | Maintenance | Warranty | Environmental

KDC - Approved Building Consent Document - BC210441 - Pg 27 of 512 - 30/08/2021 - ComplyNZ

Kendall

Project Specification

Lot 81 The Sanctuary, Mangawhai, New Zealand
Project Ref:

Printed: 22 June 2021

COASTAL HOMES

masterspec

Specification built using Masterspec software
Project ID: 226717 - 218627

Manufacturer Documents Index

3155FR	Firth Ribraft Floor Systems	2
4161P	Paul Industries Underlays, Foil & DPC	42
4161T	Thermakraft Underlays, Foils, DPC, DPM, & Tapes	55
4171E	Ecoply Barrier Rigid Air Barrier System	61
4282C	Specialized EZpanel AAC Panel Cladding System	70
4323G	Gerard Steel Tile Roofing	100
4710EW	Earthwool Glasswool Insulation	133
5113G	GIB Plasterboard Linings	161
6221M	Mapei Tiling Solutions	348
7112	Water Storage Tanks	358
7701	Electrical Basic	383

KDC - Approved Building Consent Document - BC210441 - Pg 28 of 512 - 30/08/2021 - ComplyNZ

3155FR Firth Ribraft Floor Systems

Firth Industries
+64 09 5259190
info@firth.co.nz
www.firth.co.nz

SUPPORTING DOCUMENTS

FIR0667-Ribraft-Technical-Manual-2020

Ref 12132. Uploaded 13 Sep 2020

Purpose: Performance, Installation

Firth Ribraft Codemark Certificate March 21

Ref 26144. Uploaded 27 May 2021

Purpose: Warranty

KDC - Approved Building Consent Document - BC210441 - Pg 29 of 512 - 30/08/2021 - ComplyNZ

JANUARY 2020

KDC - Approved Building Consent Document - BC210441 - Pg 30 of 512 - 30/08/2021 - CopyNZ

RibRaft®

TECHNICAL MANUAL







CODEMARK
CM20056



KDC - Approved Building Consent Document - BC210441 - Pg 31 of 512 - 30/08/2021 - ComplyNZ

This document contains design and installation information. A variation to any of the information given requires specific engineering design and is hence beyond the scope of this document.

The Firth RibRaft® Floor System can be constructed for all slab-on-ground concrete floors for domestic or residential buildings that fall within the scope of NZS 3604:2011 “Timber Framed Buildings” and Clause 3 “Scope” of Section 1 of this Manual. The design and installation details in this Manual shall be used to design and construct such a floor.

The Firth RibRaft® Floor System is covered by the MBIE Codemark®. This is conditional on the system being used as described in CertMark Australasia certification decision, which in turn requires design in accordance with Section 1 and installation in accordance with Section 2 of this Manual and on site verification in accordance with Section 3.

Note that a MBIE Codemark® means that if this Manual is rigidly followed the relevant Building Control Authority will automatically provide a building permit without the need for producer statements. To comply with the Manual does mean that Firth Certified Concrete® must be used.

THIS MANUAL CONSISTS OF 3 SECTIONS:

KDC - Approved Building Consent Document - BC210441 - Pg 32 of 512 - 30/08/2021 - ComplyNZ

SECTION 1 DESIGN INFORMATION

Contains information principally useful for the specifier or building designer

1.0	**INTRO**	**4**
2.0	**TECHNICAL INFORMATION**	**4**
2.1	Overview	4
2.2	Pods	4
2.3	Steel	4
2.4	Concrete	4
3.0	**SCOPE**	**5**
3.1	Structure Limitations	5
3.2	Live Loading	5
3.3	Snow Loading	5
3.4	Dead Loading for Use with This Manual	5
3.5	Foundation Requirement for Different Building Types	6
3.6	Foundation Soils	6
3.7	Flow Diagrams	6
4.0	**CONSTRUCTION DETAILS**	**9**
4.1	Pod Layout	9
4.2	Edge Beam Width and Reinforcement	9
4.3	Internal Ribs (non load bearing) Width and Reinforcement	9
4.4	Internal Ribs (load bearing) Width and Reinforcement	9
4.5	Point loads	9
4.6	Mesh Reinforcement	11
4.7	Re-entrant Corners	11
5.0	**LATERAL RESISTANCE**	**12**
5.1	Earthquake Resistance	12
5.2	Wind Resistance	13
5.3	Shear Keys	13
5.4	Design Example for Lateral Resistance Calculation	14
6.0	**OTHER DESIGN DETAILS**	**14**
6.1	R-Values	14
6.2	Shrinkage Control	17
6.2.1	Saw Cut Joints	17
6.2.2	Free Joints	17
6.3	Services Detailing	18
6.3.1	Within Slab Running of Services	18
6.3.2	Under Slab Running of Services	18
6.3.3	Recesses for Showers	20
6.3.4	Step Down of up to 600mm in the RibRaft® Floor	21

SECTION 2 INSTALLATION INFORMATION

Primarily aimed at the person on site installing the Firth RibRaft® Floor system

1.0	**INTRO**	**22**
2.0	**SITE REQUIREMENTS**	**22**
2.1	General	22
2.2	Temporary Excavations	22
2.3	Surface Water	22
3.0	**INSTALLATION PROCEDURE**	**24**
3.1	Site Preparation	24
3.2	Earthworks	24
3.3	Shear Keys	24
3.4	Plumbing and Services	24
3.5	Sand Blinding	24
3.6	Damp Proof Membrane	25
3.7	Edge Formwork	25
3.8	Laying the Pods and Spacers	26
3.9	Reinforcing Steel	26
3.9.1	Edge Beam Steel	26
3.9.2	Rib Steel	27
3.9.3	Mesh Reinforcing	27
3.9.4	Re-entrant Corner Steel	27
3.10	Concrete Installation	27
3.10.1	Placing	28
3.10.2	Finishing	28
3.10.3	Curing	29
3.11	Shrinkage Control Joints	29
3.11.1	Saw Cut Joints	29
3.11.2	Free joints	29
3.12	Removal of Formwork	30
3.13	Masonry Veneer	30
3.14	Landscaping/Paving	30
3.15		
4.0	**SHEAR KEYS**	**31**

SECTION 3 VERIFICATION

Describes the required verification checks

1.0	**DESIGN**	**32**
2.0	**CONSTRUCTION**	**32**

SECTION: DESIGN INFORMATION

1

1.0 THIS SECTION OF THIS MANUAL CONTAINS DESIGN INFORMATION NOT REQUIRING SPECIFIC ENGINEERING INPUT FOR THE FIRTH RIBRAFT® FLOOR SYSTEM (THE SYSTEM). FULL INFORMATION ON THE INSTALLATION PROCEDURES IS DESCRIBED IN SECTION 2 OF THIS MANUAL (INSTALLATION INFORMATION). WHERE STANDARDS ARE REFERENCED IN THIS MANUAL, THESE SHALL INCLUDE THE LATEST AMENDMENTS.

KDC - Approved Building Consent Document - BC210441 - Pg 33 of 512 - 30/08/2021 - ComplyNZ

2.0 TECHNICAL INFORMATION

2.1 Overview

The Firth RibRaft® Floor System is a reinforced concrete waffle raft floor slab-on-ground. Typically it consists of an 85mm thick slab supported by a grid of ribs normally 100mm wide at 1200mm x 1200mm centres. The overall depth is 305mm. Edge beams and ribs under load bearing walls are 300mm wide to provide for the extra load carried by these members. Where heating coils of less than 25mm diameter are embedded in the topping, the slab concrete thickness shall be 110mm meaning the overall thickness is 330mm. Where the top floor surface is honed to provide a decorative finish, a slab thickness of 100mm (before honing) should be specified.

2.2 Pods

Firth RibRaft® polystyrene pods 1100mm square and 220mm thick are placed directly on levelled ground and are arranged in such a way as to form a reinforced concrete floor slab with a grid of reinforced concrete ribs and edge beams when concrete is placed onto them. Pods may be cut to suit specific architecture layout and also to accommodate services. 300mm thick pods are available if needed for deeper edge beams and internal ribs.

2.3 Steel

Reinforcing steel in the slab shall consist of Welded Reinforcing Mesh complying with AS/NZS 4671:2001 with a minimum weight of 2.27kg/m^2, a lower characteristic stress of 500MPa, square configuration of orthogonal bars between 150 to 200mm centres, and ductility class L or E, hereafter referred to “mesh”. The presence of Class E reinforcing bars in the ribs and beams provides adequate ductility of the system which allows the use of class L mesh. Typically the topping mesh reinforcement will be 665 mesh (class L) or SE62 ductile mesh, each being equally applicable. The reinforcing bars in the ribs and edge beams shall conform to AS/NZS 4671:2001 “Steel Reinforcing Materials”. Specifically designed spacers are used to position the polystyrene pods and the rib and edge beam reinforcing steel bars in a secure manner until the concrete is placed. The reinforcing mesh is held in place by mesh chairs. Conventional timber or steel formwork is used to form the edge of the slab.

2.4 Concrete

One of the following Firth concrete products shall be used in the system:

1) Raftmix: a 20MPa 100mm slump mix available as a pump mix suitable for 100mm pump lines available in either a 13mm or more usually a 19mm nominal aggregate size, or as a structural (non-pump) mix.

2) Raftmix25: a 25MPa 100mm slump mix available as a pump mix suitable for 100mm pump lines available in either a 13mm or more usually a 19mm nominal aggregate size, or as a structural (non-pump) mix. This mix shall be specified for buildings constructed in the ‘sea spray zone’ (i.e. within 500m of the sea including harbours, within 100m of tidal estuaries or inlets, on offshore islands and elsewhere defined as exposure zone D in 4.2.3.3 of NZS3604).

Note: Additional admixtures to standard RibRaft® mixes to be approved by the Firth Plant Engineer.

CODEMARK™
CM70056

KDC - Approved Building Consent Document - BC210441 - Pg 34 of 512 - 30/08/2021 - ComplyNZ

3.0 SCOPE

This Clause sets out the limitations that apply to the use of the system to ensure that specific engineering input is not required. The concrete floor slab for buildings or ground conditions that do not meet this scope must be subjected to specific engineering design to comply with the requirements of the New Zealand Building Code.

3.1 Structure Limitations

Specific engineering input shall not be required only where the structure supported by the system complies with the following criteria:

- The structure supported by the system is constructed in a location where the Seismic Hazard Factor Z (defined in NZ1170.5) is less than or equal to 0.45 (refer to Figure 6).
- The system is laid level, or has a maximum step of 600mm detailed in accordance with this Manual.
- The structure supported by the system has no basement, part basement or foundation walls.
- The total height from the lowest ground level to the highest point of the roof shall not exceed 10m.
- The structure supported by the system has a roof pitch limited to 60 degrees maximum from the horizontal.
- The maximum height of a single or top storey is 4.8m and any other storey is 3m.
- Only ground floor walls of the structure supported by the system are permitted to be “heavy external walls” (as defined in Clause 3.3).
- The roof truss span shall be less than or equal to 12m when the roof and ceiling loads are supported entirely by the external walls. Where internal support of roof trusses is used the footings below point loads identified by the truss designer shall comply with this Manual.
- Where internal load bearing walls are used to support the roof and floor, the loaded dimensions stated in tables 8.2 and 14.10 of NZ3604:2011 shall apply, and these load bearing walls shall be supported on a 300mm wide load bearing rib as detailed in this manual.
- Floors may be of unlimited size provided that the maximum dimension between free joints shall not exceed 30m. Where free joints are required they should be detailed in accordance with this Manual.

3.2 Live Loading

The live loading cases of structures covered by these designs are:

- 1.5kPa and 3.0kPa as per NZS3604 “Timber Framed Buildings”.
- 13kN concentrated load in garage over area of 0.3 x 0.3m (vehicle limited to 2500kg gross).

3.3 Snow Loading

Open ground snow loading as defined in NZS3604 of up to 2kPa.

3.4 Dead Loading for Use with This Manual

The dead load cases of structures covered by these designs are:

- Light external walls with total mass not exceeding 60kg/m^2 – e.g. timber framing with weather boards and interior wall linings.
- Heavy external walls with total mass greater than 60kg/m^2 but not exceeding 290kg/m^2 – e.g. timber framing with masonry veneer or partially filled 20 series masonry blocks.
- Internal walls with total mass not exceeding 45kg/m^2 – e.g. timber framing and linings.
- Light roofs with total mass not exceeding 45kg/m^2 – e.g. ceiling linings and metal roof, including framing.
- Heavy roofs with total mass greater than 45kg/m^2 but not exceeding 85kg/m^2 – e.g. ceiling lining and concrete tiles or slates, including framing.
- Mid-floors with total mass not exceeding 60kg/m^2 – e.g. timber framing and flooring, including ceiling linings.
- Heavy internal walls and/or load bearing internal walls supported on a load bearing rib.

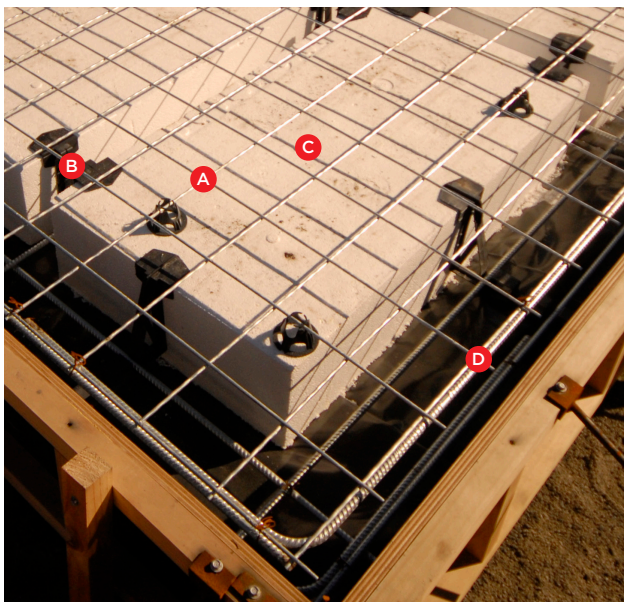

The RibRaft® System

A Steel mesh reinforcing **B** Firth 100mm spacer
C Firth RibRaft® polystyrene pods **D** Steel reinforcing

3.5 Foundation Requirement for Different Building Types

The designs given in this Manual are limited to where the system supports Building Types as described in Table 1. The classification of wall and roof weights are as detailed in Clause 3.4 of this Section. Single and two storey shall be as defined in NZS 3604:2011.

Table 1 Foundation Type Identifier

NUMBER OF STORIES	ROOF	GROUND FLOOR EXTERNAL WALLS	SECOND STOREY EXTERNAL WALLS	1.5KPA LIVE LOAD & UP TO 1KPA SNOW LOAD	3KPA LIVE LOAD & /OR 2KPA SNOW LOAD
SINGLE STOREY	Light	Light		A	A
	Heavy	Light		A	B
	Light	Heavy		B	B
	Heavy	Heavy		C	C
DOUBLE STOREY	Light	Light	Light	C	D
	Heavy	Light	Light	D	E
	Light	Heavy	Light	D	E
	Heavy	Heavy	Light	E	G

3.6 Foundation Soils

The system may be used when the supporting ground meets the definitions of "good ground" given in Section 3 of NZS 3604:2011 (as modified by B1 of the Building Compliance Documents). In addition, the system shall not be used for damp sites i.e. where it can be reasonably expected that the ground water level could come within 600mm of the underside of the system. The acceptability of the ground shall be verified in accordance with Clause 3.1.3 of NZS 3604:2011.

Solutions for soils prone to liquefaction or expansive soils are available using the Firth RibRaft® technology, however these are outside the scope of this Manual and require specific engineering design.

Where the ultimate bearing capacity required of the supporting ground is verified by Scala Penetrometer testing in accordance with Clause 3.3 of NZS3604:2011 or for cohesive soils using a calibrated shear vane in accordance with the NZGS Guideline for Hand Held Shear Vane Test, the bearing capacity shall exceed the values in Table 2 for the proposed building type. For scala penetrometer testing, the bearing capacity shall be considered adequate when the number of blows per 300mm depth of penetration below the underside of the system at each test site exceeds the values given in Table 2 below.

For RibRaft® foundations compliance with Table 2 allows ultimate bearing capacities of less than 300kPa. However, with the exception of bearing capacity all other requirements in NZS3604:2011 for "good ground" shall be complied with.

Table 2 Scala Penetrometer Blows Required and Ultimate Bearing Capacity

FOUNDATION TYPE	ULTIMATE BEARING CAPACITY (KPA)	MIN. BLOWS PER 300MM DEPTH FOR SCALA TESTING
A	140	4
B	175	5
C	210	6
D	240	7
E	275	8
G	Good ground	9

3.7 Flow Diagrams

The flow diagrams on the following pages (adapted from NZS3604:2011) will help in determining whether the non-specific details for the system can be used for the purposes of the concrete floor slab construction. There are two checks in the process. The first is to determine whether the proposed building complies with the requirements set out in this Manual (Building Check), and the second is to determine whether the site complies with the requirements set out in this Manual (Site Check).

(Note: NZS3604:2011 provides for parts of buildings to be considered as individual buildings. These flow diagrams apply to those parts of the building where slab-on-ground is being considered and where the part of the building can be considered as an individual building under NZS3604:2011).

KDC - Approved Building Consent Document - BC210441 - Pg 35 of 512 - 30/08/2021 - ComplyNZ

Figure 1 Building Check Flow Diagram

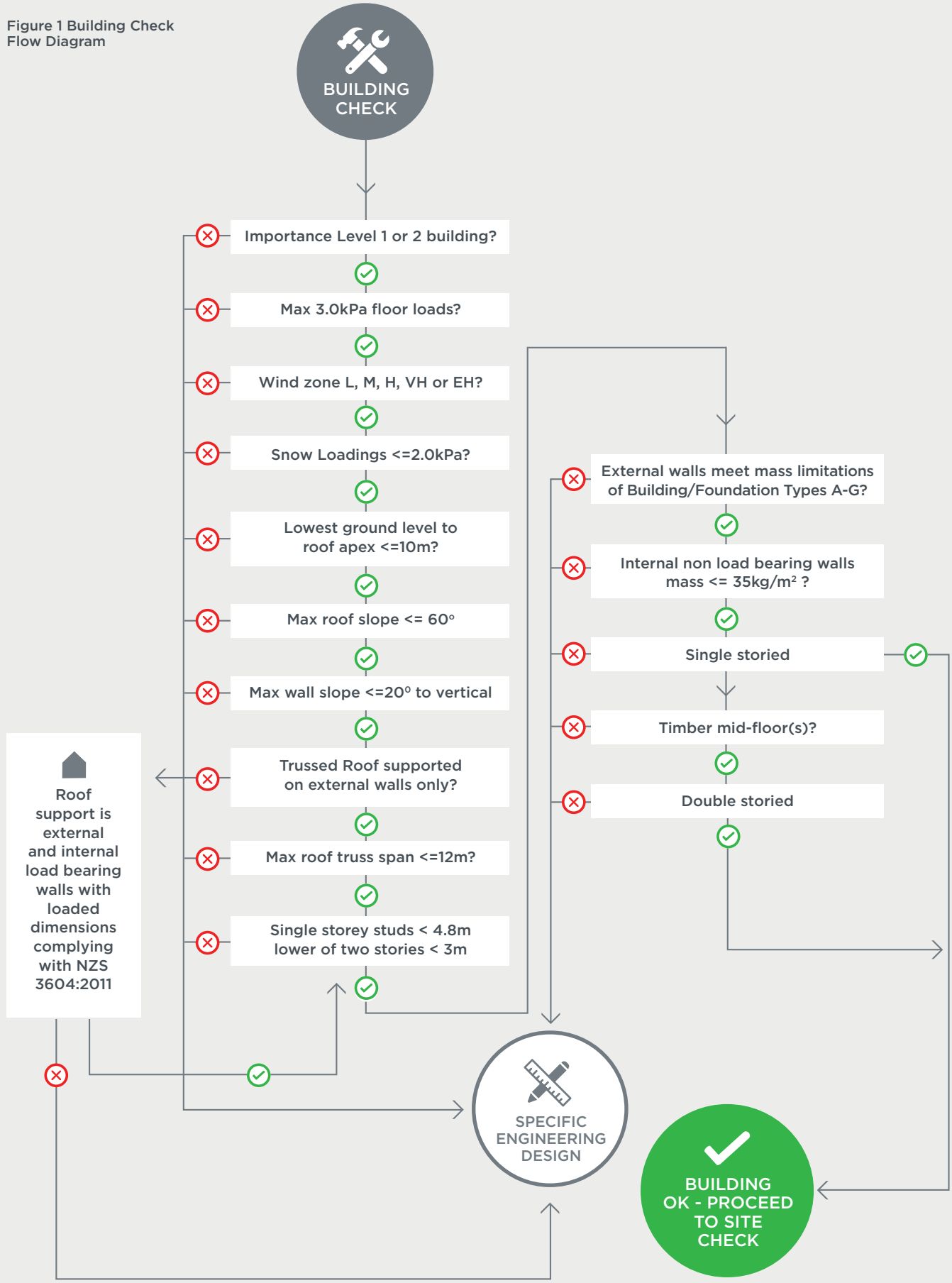

KDC - Approved Building Consent Document - BC210441 - Pg 36 of 512 - 30/08/2021 - ComplyNZ

Figure 2 Building Check
Flow Diagram

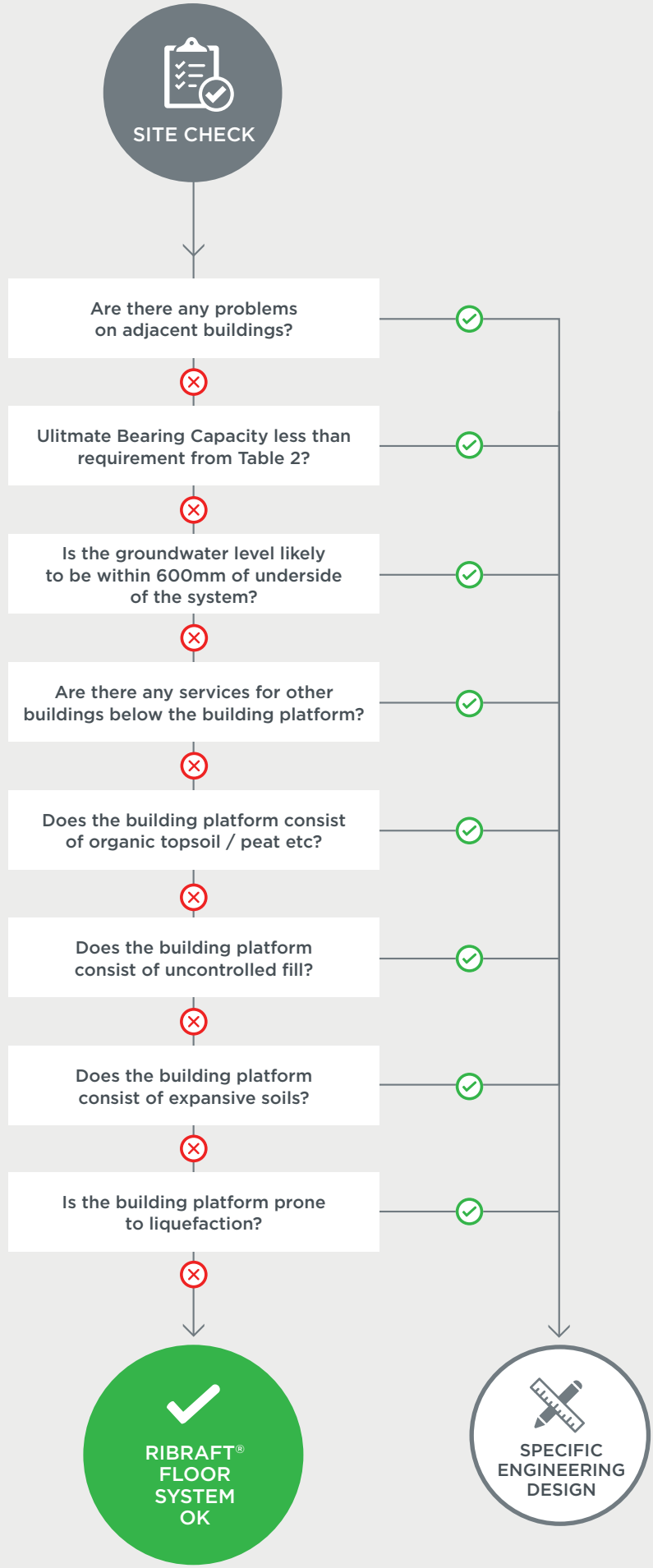

KDC - Approved Building Consent Document - BC210441 - Pg 37 of 512 - 30/08/2021 - ComplyNZ

4.0 CONSTRUCTION DETAILS

Standard construction details for the system are provided here for buildings that fall within the below scope.

4.1 Pod Layout

RibRaft® polystyrene pods supplied by Firth (1100 x 1100 x 220mm thick) shall be placed on levelled ground and arranged in a waffle pattern. The pods are used as void formers while the concrete is curing. These pods are an integral component of the system and shall not be substituted.

Pods shall be placed so as to provide the necessary spacing between the edge beams and ribs as described below. The first rib out from the edge beam shall have a maximum clear separation of 1100mm however in all other cases the centre to centre distance between the ribs, whether they are 100mm or 300mm wide, shall be 1200mm. In the case of 100mm ribs this centre to centre spacing is achieved by the 1100mm square pods however between 100mm and 300mm ribs, or between two 300mm ribs, the pods shall be cut down to suit. Pods may be cut down to size but shall not be added to, where this is necessary to suit the building layout, penetrations or orientation of beams and ribs.

Figure 3 shows a typical layout of the pods and ribs. Note the part pods around the edge, where the building shape dictates, and adjacent to the 300mm rib.

Firth suggests that when drawing the building plan, a generic RibRaft® grid (100mm wide ribs at 1200mm centres) is set out using the corner of the building as a starting point. The location of any load bearing ribs, or point loads greater than 10kN, are identified and pods cut to establish 300mm wide ribs or foundation pads as described in this Manual. The most cost effective solution being a simple grid layout which requires minimum cutting of the pods. Ribs can be used at less than 1200mm centres, however it is more cost effective to use the 1200mm centres wherever practicable.

Figure 3 Typical RibRaft® Plan

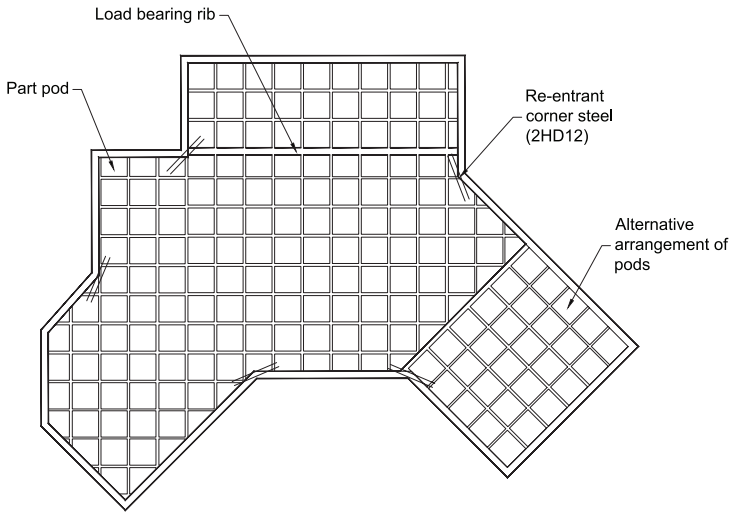

4.2 Edge Beam Width and Reinforcement

Edge beams around the perimeter of the floor slab shall be 300mm to provide bearing capacity for external load bearing walls, and contain 2-HD12 bars (Grade 500E) as bottom steel and 1-HD12 bar (Grade 500E) in the top. This top bar shall be tied to the underside of the reinforcement mesh. Refer Figure 5, below for construction details. The edge beam shall be rebated for brick veneers where necessary as shown in Figure 5(C).

4.3 Internal Ribs (non load bearing) Width and Reinforcement

Each standard internal rib shall be 100mm wide and shall contain 1-HD12 steel bar (Grade 500E) held in place at the bottom of the rib by a Firth spacer. Refer Figure 5E for construction details.

4.4 Internal Ribs (load bearing) Width and Reinforcement

For load bearing walls that support the roof and floors and heavy internal walls, the pods shall be cut to create a 300mm wide rib directly under the load bearing wall, Refer Figure 5(D) for construction details under load bearing walls. Where the load bearing ribs meet and terminate at an edge beam or internal rib the bottom reinforcement from the load bearing rib shall be bent into the adjacent rib and tied together. The reinforcement shall lap for at least 720mm.

KDC - Approved Building Consent Document - BC210441 - Pg 38 of 512 - 30/08/2021 - ComplyNZ

4.5 Point Loads

Truss manufacturers often support the roof trusses internally on posts or studs within a wall, which are described on the truss manufacturer's drawings as falling into various ultimate limit state categories. Table 3 summaries when individual footings are required below the reactions, and the form these should take.

Table 3 Foundation Requirements for Individual Point Loads

	FOUNDATION OPTIONS BELOW POINT LOAD:	
ULTIMATE LIMIT POINT LOAD REACTION	PAD OPTION, GOOD GROUND	BEAM OPTION, BEARING CAPACITY GREATER THAN 140KPA [3]
Up to 10kN	No thickening required	No thickening required
Up to 20 kN	375x375 pad[1]	300mm wide load under point load as detailed in Figure 5
Up to 30kN	450x450 pad[2]	300mm wide load under point load as detailed in Figure 5

Notes
(1) Pad thickness to match depth of pods plus topping (bears on ground not polystyrene) and reinforced with 2 x D12 Bars both ways
(2) Pad thickness to match depth of pods plus topping (bears on ground not polystyrene) and reinforced with 3 x D12 Bars both ways
(3) Refer section 3.6 for confirmation of bearing capacity. With exception of bearing capacity all other requirements in NZS3604 for good ground shall be complied with.

Figure 4 Details for Beam Option Thickening Under Point Loads

ULTIMATE LIMIT LOAD P FROM TRUSS DESIGNER	MINIMUM EDGE DISTANCE X IN MM
20kN	200 *
30 kN	400 *

* If minimum edge distances cannot be achieved extend thickening to next 100mm ribs

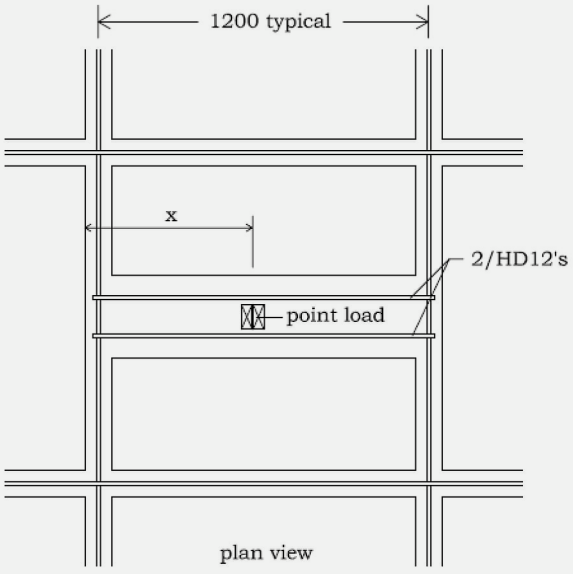

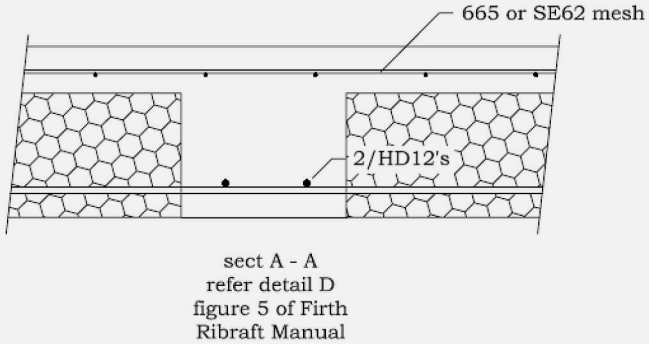

KDC - Approved Building Consent Document - BC210441 - Pg 39 of 512 - 30/08/2021 - ComplyNZ

4.6 Mesh Reinforcement

The entire floor slab shall be reinforced with 665 or SE62 mesh supported on 40mm mesh chairs sitting on the polystyrene pods.

4.7 Re-entrant Corners

In order to limit the width of cracking at the re-entrant, or internal corners, extra steel shall be placed on top of the mesh. These shall be 2-HD12 bars (Grade 500E), 1200mm long tied to the top of the mesh at 200mm centres, with 50mm cover from the internal corner – refer Figure 3.

KDC - Approved Building Consent Document - BC210441 - Pg 40 of 512 - 30/08/2021 - ComplyNZ

Figure 5
Standard RibRaft®
Construction Details

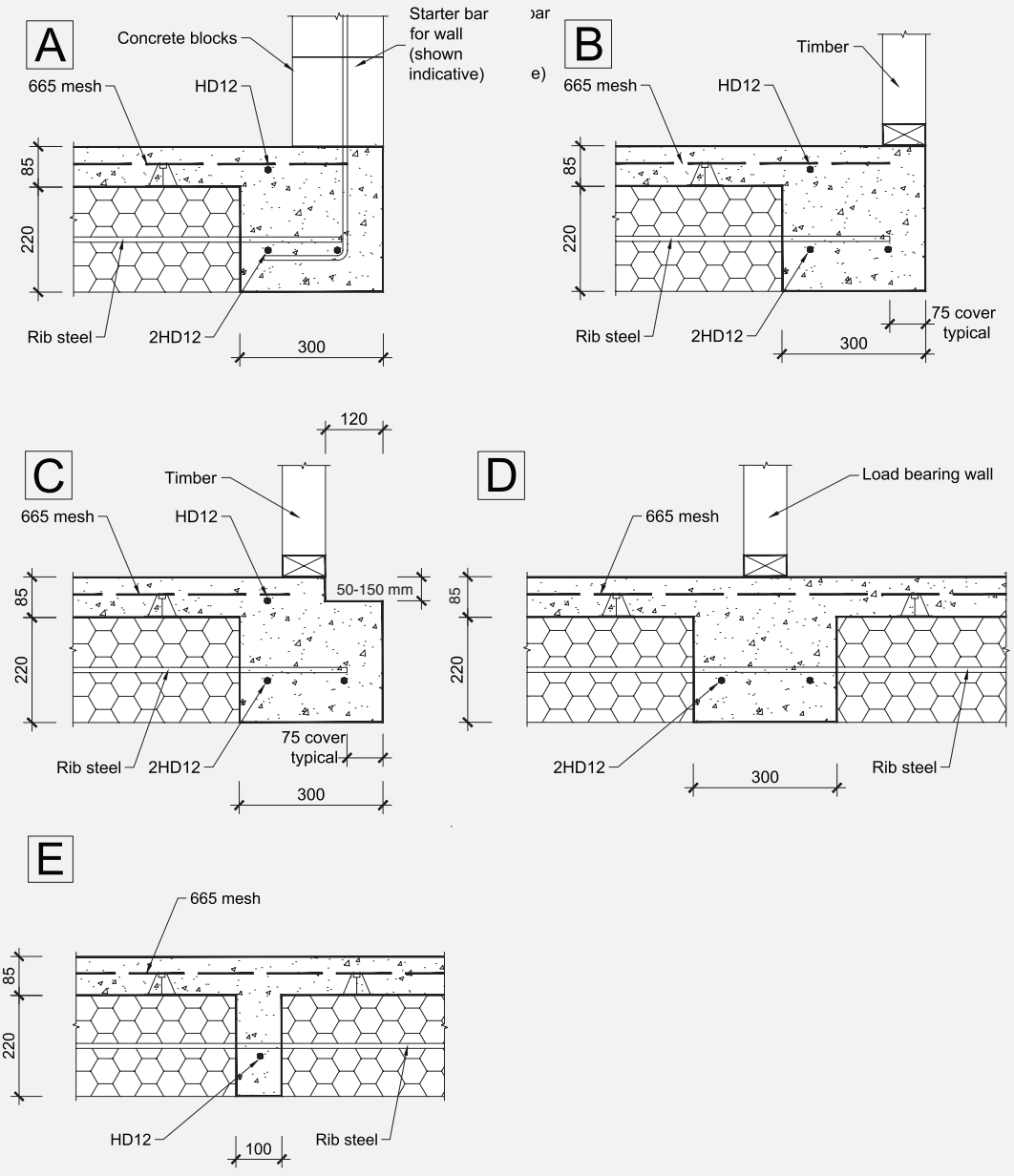

5.0 LATERAL RESISTANCE

5.1 Earthquake Resistance

Unlike conventional foundation systems, the Firth RibRaft® system is not embedded into the ground. Sliding resistance to horizontal seismic loads is provided by frictional contact with the soil. In locations where the Seismic Hazard Factor Z is greater than 0.45, shear keys maybe required to resist seismic loads. Such buildings require specific engineering design and are outside the scope of this document. Refer to Figure 6.

Depending on the wind zone and the weight of the building elements this frictional resistance may not be sufficient to provide sliding resistance to wind loads, and specific shear keys may be required, as detailed in Clause 5.2.

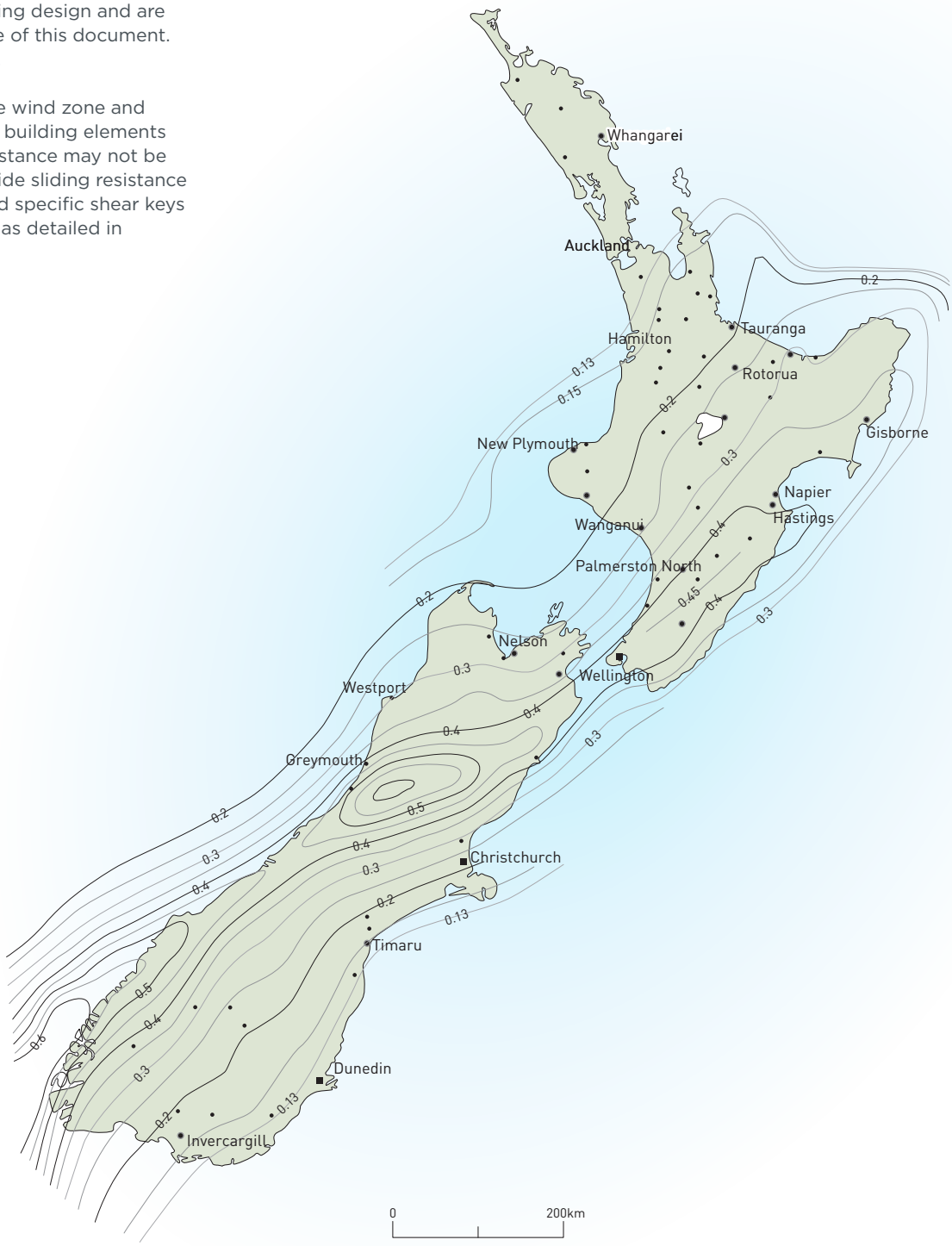

Figure 6
Seismic Hazard Factor Z to NZS 1170.5

KDC - Approved Building Consent Document - BC210441 - Pg 41 of 512 - 30/08/2021 - ComplyNZ

KDC - Approved Building Consent Document - BC210441 - Pg 42 of 512 - 30/08/2021 - ComplyNZ

5.2 Wind Resistance

The building's bracing demand from wind loading shall be assessed from Section 5 of NZS 3604:2011 for both directions (i.e. along and across the building). The bracing capacity of the system must exceed the greater of the bracing demands determined.

The bracing capacity of the system shall be determined as the sum of the bracing capacity provided by frictional resistance (i.e. friction between the system and the ground) and the bracing capacity provided by the shear keys (if any) necessary to meet the requirements of Clause 5.2.

The bracing capacity provided by frictional resistance shall be determined from Table 4 depending on the building type, roof weight, and floor live loading. The bracing capacity provided by the shear keys shall be the sum of the bracing capacity of the individual shear keys determined as follows. If the shear key is in clay, each shear key shall be considered to contribute 170 BU's. If the shear key is in sand, each shear key shall be considered to contribute 200 BU's. If the bracing capacity of the system, determined from the frictional resistance and the shear keys as described above, is less than the bracing demand further shear keys shall be added until the bracing demand is met.

BUILDING TYPE	ROOF TYPE	GROUND FLOOR EXTERNAL WALLS	SECOND STOREY EXTERNAL WALLS	BU's PROVIDED PER 100M² 1.5KPA	FOR LIVE LOADING OF: 3.0KPA
Single Storey	Light	Light		1630	1746
Single Storey	Heavy	Light		1737	1857
Single Storey	Light	Heavy		1802	1922
Single Storey	Heavy	Heavy		1909	2029
Double Storey	Light	Light	Light	2163	2403
Double Storey	Heavy	Light	Light	2270	2510
Double Storey	Light	Heavy	Light	2335	2575
Double Storey	Heavy	Heavy	Light	2442	2682

Table 4 Bracing Capacity Provided By Frictional Resistance Per 100m² Of Ground Floor Area

5.3 Shear Keys

Shear key piles required by Clause 5.2 must be uniformly distributed around the perimeter of the building, and be located at the edge beam/internal rib junction. Where a shear key is required, the minimum number of shear keys shall be two per floor plan. Where two shear keys are used they shall be placed at diagonally opposite ends of the floor plan.

Construction details of the shear keys shall be as shown on Figure 7. Shear keys shall be a minimum of 900mm long. The holes shall be over-drilled at least 100mm and a polystyrene RibRaft® Shear Key Support placed into the bottom of each hole. This will support only the plastic (wet) concrete and then allow movement of the shear key if settlement of the supporting ground occurs. The effective end bearing of the shear keys is therefore eliminated.

Figure 7 RibRaft® Shear Key

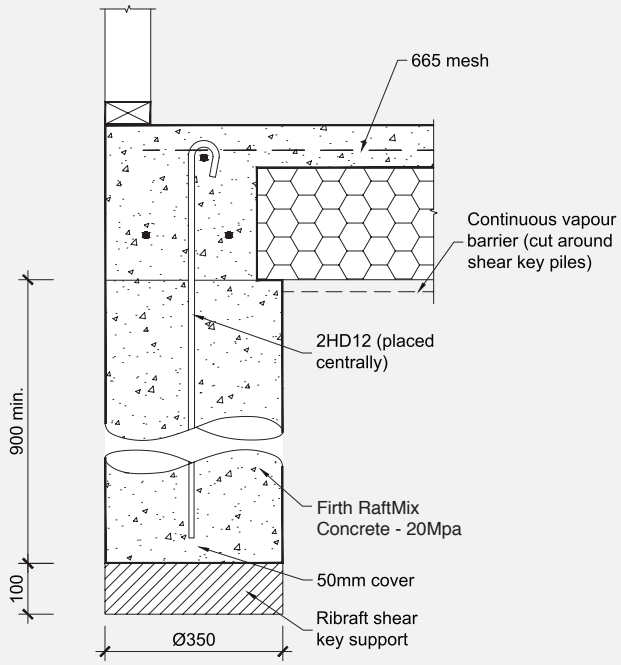

5.4 Design Example For Lateral Resistance Calculation

The following is a short example to demonstrate the process of determining whether shear piles are required.

Consider a 180m^2 single storey home with a light roof located in Palmerston North in a VH wind zone as defined by NZS3604. Assume the building height is 6m with 3m above the eaves. The length for across wind considerations is 15m and the width (along wind) is 12m.

First consider seismic actions. From Figure 6 the seismic hazard factor is 0.4. Since this is less than 0.45 shear keys will not be required for earthquake resistance.

Now consider wind loading. Table 5.5 of NZS3604 requires 95 bracing units per meter (BU/m) across the building and 90 BU/m along. As it's a very high wind zone these figures need to be increased by a factor of 1.3.

The BU demand for across building wind is therefore = 95 x 1.3 x 15 = 1853BU
The BU demand along the building = 90 x 1.3 x 12 = 1404BU

From Table 4 for a single storey light weight roof with 1.5kPa live load the capacity is 1630BU per 100m^2. Therefore for 180m^2 the capacity is 2934BU. As the capacity (2934) is greater than the demand (1853) no shear keys are required.

If the demand had exceeded the capacity then any shortfall can be provided by supplying shear keys in accordance with Section 5.3 with each shear key providing the BU specified in Section 5.2.

6.0 OTHER DESIGN DETAILS

6.1 R-Values

The insulation performance of a building element is measured by the "R-Value". The schedule method is the simplest method to achieve compliance with Clause H1 of the Building Code. Using this method the minimum R-Values required for floors are R1.3 for light timber frame construction, and typically R1.5 for masonry construction. R-values of R1.3 can be used for masonry construction if glazing with greater insulation is used (refer NZBC, Clause H1). If in-floor heating is used the minimum required R-Value is increased to R1.9, and the resistance to thermal movement into the room must be one tenth of that to the outside environment.

The fourth edition of H1 (amendment 3, January 2017) states that "Concrete slab-on-ground floors are deemed to achieve a construction R-value of 1.3, unless a higher R-value is justified by calculation or physical testing". RibRaft® is therefore a deemed to comply solution however in some instances designers may wish to determine the R-value as part of the design process. There are numerous methods for calculating R-values for slabs on ground, with many of the processes giving quite different R-values. NZBC clause H1 prescribed that an "Acceptable methods for determining the thermal resistance (R-values) of building elements are contained in NZS 4214."

The R-values provided in this Manual use the NZS4214 methodology.

If the R-value calculation is required to demonstrate compliance with the Building Code, then the NZS4214 methodology is probably the best alternative due to its refrerence in H1. However, more technically robust calculation methodologies exist and and where the R-values are important, for example heated floors, use can be made of the BRANZ Home Insulation Guide. For these instances edge insulation is also recommended.

When slab edge insulation is specified, it is recommended that Firth HotEdge® is used as it has been designed to be compatable with Firth RibRaft®.

The R-Value of a concrete floor is dependent on the floor area to perimeter ratio, and the details of the floor perimeter. The R-Value for various solutions are illustrated below. The R-Values have been independently calculated using NZS4214:2006 "Methods of Determining the Total Thermal Resistance of Parts of Buildings," though modified for perimeter heat loss using recommendations from the Building Research Establishment.

KDC - Approved Building Consent Document - BC210441 - Pg 43 of 512 - 30/08/2021 - ComplyNZ

KDC - Approved Building Consent Document - BC210441 - Pg 44 of 512 - 30/08/2021 - ComplyNZ

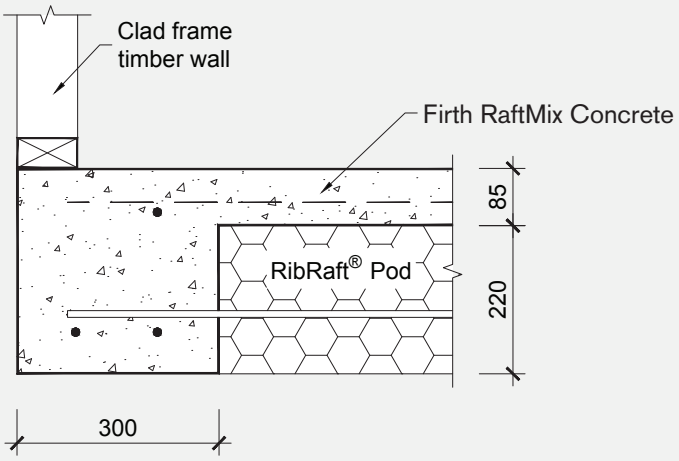

Figure 8
RibRaft® R Values For 90mm Thick Walls On The Floor Edge

	FLOOR AREA TO PERIMETER RATIO M²/M										
	1.00	1.25	1.50	1.75	2.00	2.25	2.5	2.75	3.0	3.5	4.00
R-Value m² °C/W	1.28	1.40	1.52	1.64	1.75	1.86	1.97	2.07	2.17	2.38	2.57

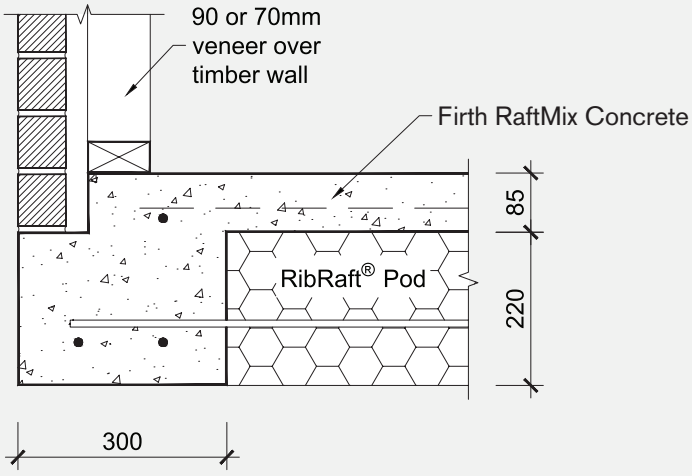

Figure 9
RibRaft® R Values For 70-90mm Thick Veneer, Cavity, and 90mm Walls.

	FLOOR AREA TO PERIMETER RATIO M²/M									
	1.25	1.50	1.75	2.00	2.25	2.5	2.75	3.0	3.5	4.00
R-Value m² °C/W	1.54	1.67	1.80	1.93	2.05	2.17	2.28	2.40	2.62	2.84

KDC - Approved Building Consent Document - BC210441 - Pg 45 of 512 - 30/08/2021 - ComplyNZ

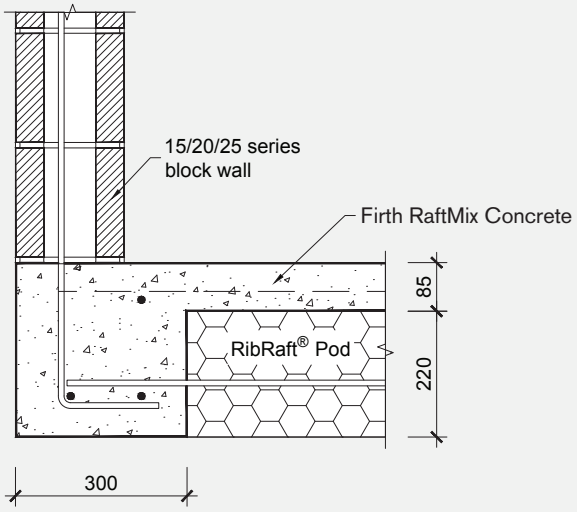

Figure 10
RibRaft® R Values For Various Thicknesses Of Masonry Walls

	BLOCK	FLOOR AREA TO PERIMETER RATIO M²/M									
		1.25	1.50	1.75	2.00	2.25	2.5	2.75	3.0	3.5	4.00
R-Value m² °C/W	15 SERIES	1.48	1.60	1.73	1.85	1.96	2.08	2.19	2.30	2.51	2.72
	20 SERIES	1.54	1.67	1.80	1.93	2.05	2.17	2.28	2.40	2.62	2.84
	25 SERIES	1.59	1.73	1.86	1.99	2.12	2.24	2.37	2.49	2.72	2.95

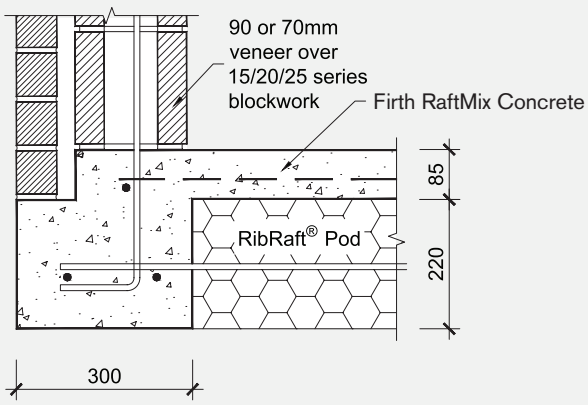

Figure 11
RibRaft® R-Values For 70-90mm Thick Veneer, Cavity, And Various Thickness Masonry Walls

	BLOCK	FLOOR AREA TO PERIMETER RATIO M²/M									
		1.25	1.50	1.75	2.00	2.25	2.0	2.75	3.0	3.5	4.00
R-Value m² °C/W	15 SERIES	1.59	1.73	1.86	1.99	2.12	2.24	2.37	2.49	2.72	2.95
	20 SERIES	1.64	1.78	1.92	2.06	2.19	2.32	2.44	2.56	2.81	3.04
	25 SERIES	1.69	1.83	1.98	2.11	2.25	2.38	2.51	2.64	2.88	3.12

6.2 Shrinkage Control

Shrinkage control joints reduce the risk of unwanted cracks, and their placement needs to be carefully considered where uncontrolled cracking could be unacceptable. Two types are described here: saw cut joints (which are tied joints), and free joints.

KDC - Approved Building Consent Document - BC210441 - Pg 46 of 512 - 30/08/2021 - ComplyNZ

6.2.1 Saw Cut Joints

Saw cuts are located at positons in which the concrete is likely to crack due to stresses induced by restrained shrinkage. The aim of providing them is for the concrete to crack at the bottom of the saw cut thus minimizing the potential for a visible crack wandering over the surface. The level of reinforcement provided in a RibRaft® mean that cracks have no structural implications being only an aesthetics issue. Factors to consider are the type of floor finish, the location of ribs and ground beams, underfloor heating, and the effect of piles restraining shrinkage.

Preference should be given to using early entry saws which are used immediately after finishing. Shrinkage control joints cut using diamond blades shall be cut as early as possible which is typically within 24 hours of hardening in summer, and 48 hours in winter. They shall be cut to a depth of 25mm. Shrinkage control joints do not guarantee elimination of all visible or unwanted cracks but should minimise number.

Joints shall be positioned to coincide with major changes in floor plan. Where concrete is to be exposed, for example in a garage, or brittle covering placed over, the maximum intermediate bay sizes shall be limited to 5m. Bay dimensions formed by shrinkage control joints shall be limited to a maximum ratio of length:width of 1.5:1. Shrinkage control joints shall be placed over 100mm wide internal ribs wherever possible. Where a shrinkage control joint runs along the line of a 300mm wide load bearing rib, then the joint shall be located directly above one edge of that rib.

In order to limit the width of cracks at re-entrant, or internal corners, extra steel shall be placed on top of the mesh. These shall be 2-HD12 bars (Grade 500E), 1200mm long tied to the top of the mesh at 200mm centres, with 50mm cover to the internal corner – refer Figure 3.

6.2.2 Free Joints

Where the length of the floor exceeds 30m a free joint shall be provided as detailed in Figure 12. Movement, shrinkage and thermal, will occur over this joint so it shall be positioned to minimize the impact of this movement on floor coverings and wall elements.

Where the bottom of the RibRaft® is not flat (for example the floor incorporates a step down), free joints shall be provided if the distance from the step down to edge of slab exceeds 15m.

Figure 12 Free Joint Details

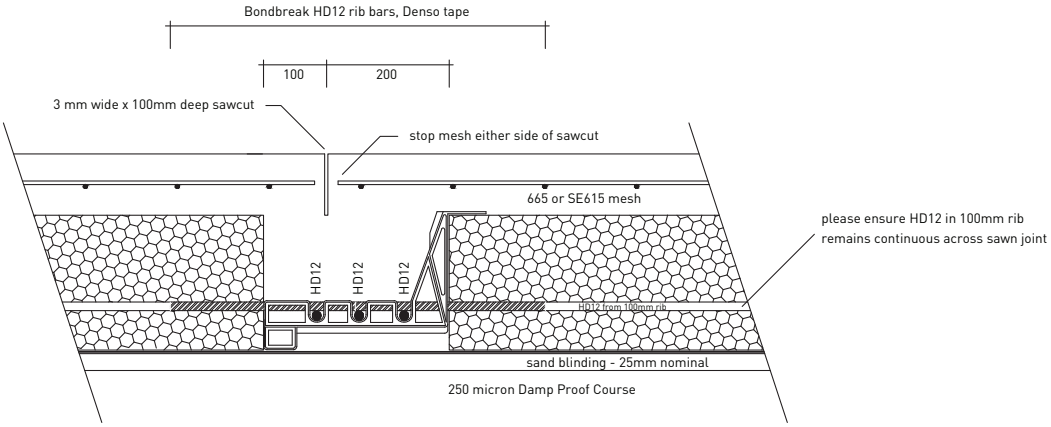

RibRaft® control / free joint detail at 300mm wide thickening
align sawcut with internal corner where possible

6.3 Services Detailing

Two options exist for running services, both of which are appropriate, however some regional Building Control Authorities and Builders have clear preferences. The options being within slab, or under slab. Experience from the Christchurch earthquakes shows that the most seismically robust solution is for services to run within the plane of the pods (within slab).

KDC - Approved Building Consent Document - BC210441 - Pg 47 of 512 - 30/08/2021 - ComplyNZ

6.3.1 Within Slab Running of Services

Pipes services can be run within the plane of the pods either exiting out of the side of the perimeter ring beam or going underground at the edge beam. Pipes shall be laid at a fall to comply with NZBC G13/AS1. For pipe up to 65mm diameter the minimum gradient is typically 1 in 40, while for 100mm pipes it's 1 in 60, however greater falls may be required dependent upon the required number of discharge units. Table 5 provides distances from the edge of the slab to pipe surface penetration to achieve minimum pipe gradients. A 300mm pod alternative is often used where the proposed positioning of the service means minimum required gradients cannot be achieved. Where gradients cannot be achieved with a 300mm pod, then service will require to be run under the slab.

Pipes shall be located to pass perpendicular to the ribs and beams and shall not be laid along the length of ribs or beams. Pods are cut as required to achieve the required fall and position. Pipes shall be laid to ensure 15mm concrete cover between pipe and reinforcement in the perimeter beam. All pipes in contact with concrete shall be lagged with an impermeable material of at least 6mm thickness.

Table 5 Maximum Distance From Exterior To Entrance Point Of Plumbing Pipes

PIPE DIAMETER (ID)MM	GRADIENT	MAXIMUM DISTANCE TO EDGE WITH 220MM THICK POD	MAXIMUM DISTANCE TO EDGE WITH 300MM THICK POD
40	1 in 40	3400	6600
50	1 in 40	3000	6200
65	1 in 40	2400	5600
100	1 in 60	1200	4400

6.3.2 Under Slab Running Of Services

For this option, services ducts shall be conveyed underground to their plan location then brought up through the polystyrene pod and the concrete floor slab, within the limitation imposed by Table 8. Services shall not be placed within any concrete except to cross that section of concrete i.e. services shall not run along ribs or edge beams. In accordance with AS/NZS3500.4:2015 pipes penetrating through concrete shall be:

> Installed at right angles to the slab surface.

> Lagged with an impermeable material for the full depth of the concrete penetration.

> Lagging must be at least 6mm thick.

The maximum diameter of the services shall be as outlined in Table 6.

Any services crossing ribs or the edge beam horizontally shall be placed only within the middle third of the member. Except as noted in Figure 13, services crossing the ribs vertically shall also be constrained to the middle third of the width of the edge or internal load bearing rib. Except as noted in Figure 15 at no stage shall any of the reinforcement bars be relocated or cut to allow for the services (it is acceptable, however to cut the mesh). In some instances this will dictate the location of the ribs. The pods shall be cut to allow for this and if necessary, the spacing of the ribs shall be decreased locally. There shall be 600mm minimum clear spacing in each direction between penetrations through the system.

KDC - Approved Building Consent Document - BC210441 - Pg 48 of 512 - 30/08/2021 - ComplyNZ

Table 6 Maximum Diameter Of Pipe Services

ELEMENT	VERTICAL SERVICE	HORIZONTAL SERVICE
300mm wide edge beam	50mm nominal bore pipe	100mm NB pipe
500mm localized wide edge beam (1)	100mm NB pipe	100mm NB pipe
300mm wide internal load bearing rib	50 NB pipe	100mm NB pipe
100mm wide internal rib	Nil	100mm NB pipe
Slab	100 NB pipe, or for large services 450mm square see also Note 3	Nil

Notes:

(1) For situations where a 100mm diameter pipe is required to pass vertically through the edge beam, the edge beam shall be locally increased in width to a minimum of 500mm wide. This shall be achieved by keeping flush the outside face of the edge beam and removing 200mm from the pod. The width shall remain at 500mm for a distance of 600mm beyond the service pipe. Refer to figure 14 for details for pipes passing vertically through edge beam and internal rib.

(2) Where a gas pipe line runs through the RibRaft® floor system, in addition to the requirements above, the pipeline shall enter the building through the outside face of the perimeter foundation beam and be located in the plane of the pods. The aim being to ensure that damage to the gas pipe will most likely occur outside the building envelope should movement occur between the ground and RibRaft® in a large earthquake.

(3) Larger penetrations or voids up to 450mm square (e.g. for shower waste/traps) are permitted through the slab provided all the conditions of this paragraph are met. These openings shall be trimmed with 1 HD12 (Grade 500E) bar 1500mm long placed along each side of the opening, tied to the mesh. One set of parallel bars shall be placed on top of the mesh and the other set placed under the mesh. These openings shall not be placed over a rib or edge beam. If necessary, the rib spacing shall be reduced or the pod layout altered to ensure that the opening occurs solely in the slab above a polystyrene pod. Penetrations such as these shall not be installed in garages or other areas where large (>3kN) point loads could be present. Only one penetration greater than 110mm is permitted in the slab above any single pod or part pod. Where two large openings are required to be in close proximity, an internal rib shall separate them. For these large penetrations/voids in the slab, the services shall not be within 25mm of the edges of the void through which they pass, and the opening shall be sealed to prevent materials entering the subfloor cavities. (This type of opening is normally only required for a shower waste/trap and the installation of the shower will ensure that the void is sealed/covered).

A pictorial of some of the above requirements is illustrated in Figure 13 and 14.

Figure 13 Example of Detailing Requirements For Services

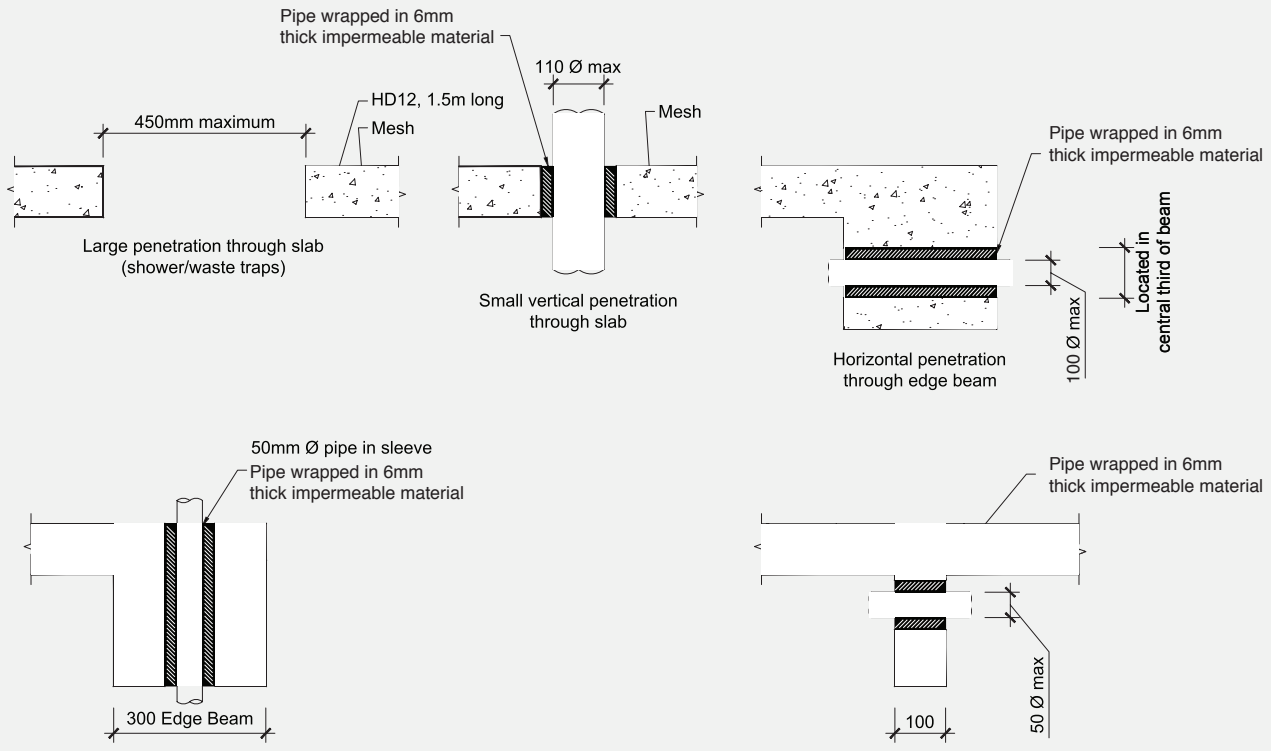

Figure 14
Localised Increase In Width At Edge Beam Where Vertical Service Up To 100mm Diameter Are Required

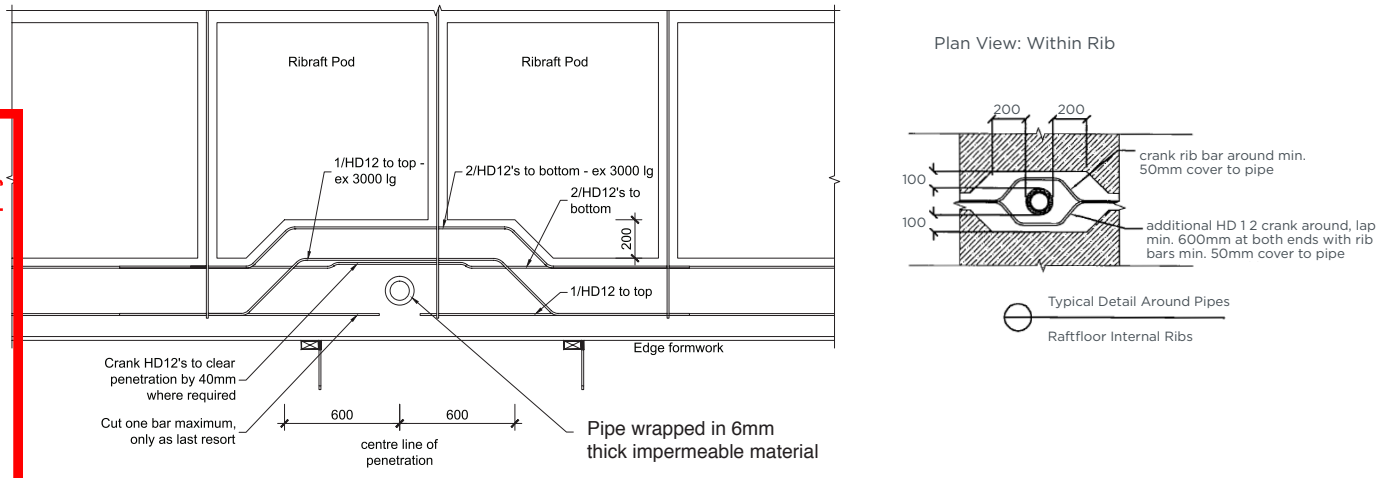

KDC - Approved Building Consent Document - BC210441 - Pg 49 of 512 - 30/08/2021 - ComplyNZ

6.3.3 Recesses for Showers

Where showers are rebated up to 50mm into the RibRaft® concrete topping, the details specified shall be in accordance with Figure 15.

Figure 15 Details where recesses of up to 50mm are required for rebated showers

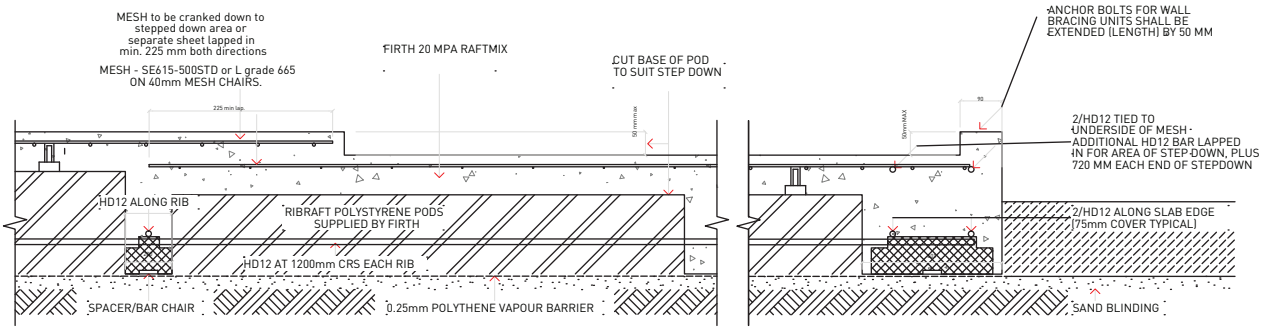

RIB RAFT FLOOR - SET-DOWN DETAIL FOR MAX. 50mm REBATED SHOWER

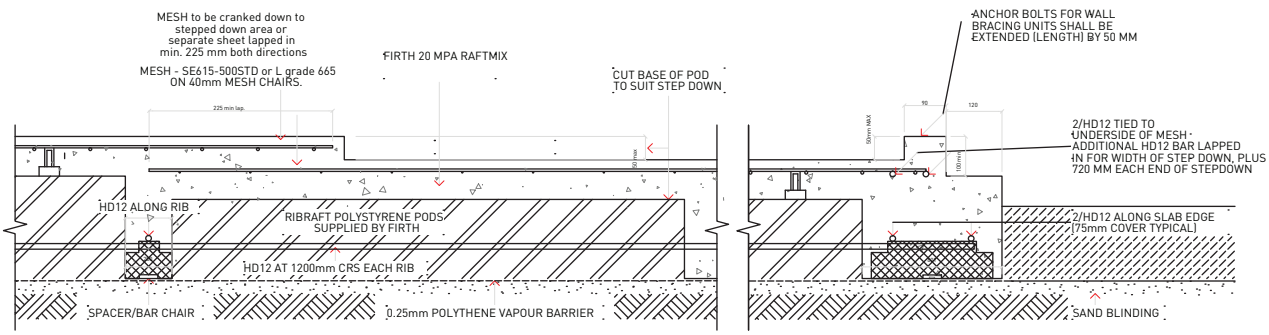

RIB RAFT FLOOR - SET-DOWN DETAIL FOR MAX. 50mm REBATED SHOWER

KDC - Approved Building Consent Document - BC210441 - Pg 50 of 512 - 30/08/2021 - ComplyNZ

Figure 16 Details where step downs are required in the floor

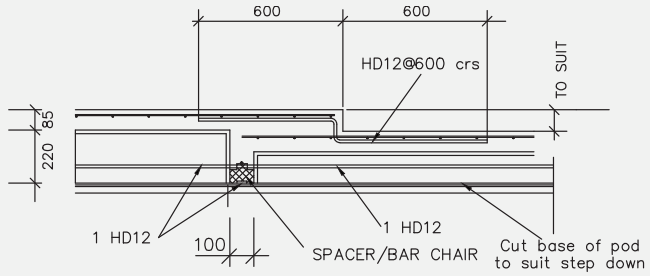

7/S2 SET–DOWN DETAIL FOR STEP UP TO 100mm
1:20

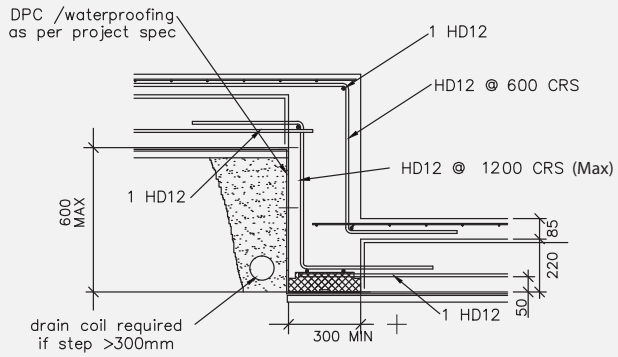

9/S2 SET–DOWN DETAIL IN CONCRETE FOR STEP LESS THAN 600mm
1:20

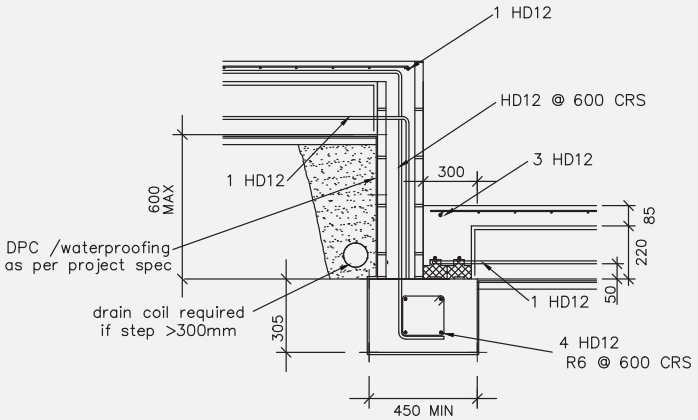

8/S2 SET–DOWN DETAIL IN MASONRY FOR STEP LESS THAN 600mm
1:20

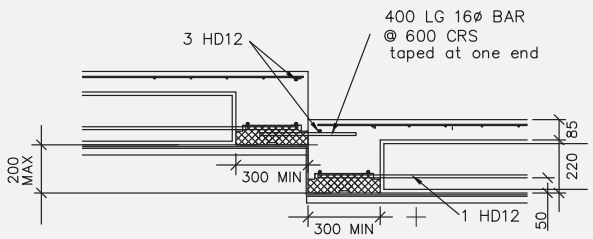

10/S2 SET–DOWN DETAIL FOR STEP 100 TO 200mm FOR SEPARATELY POURED SLABS
1:20

6.3.4 Step Down Of Up To 600mm In The RibRaft® Floor

Where the site topography requires a step down in the slab, steps of up to 600mm can be accommodated using one of the details provided in Figure 16. A step down in the RibRaft® floor system anchors the floor in that location with respect to volume changes associated with drying shrinkage. As required by 6.2.2, a free joint shall be provided if the distance from the step down to the slab edge exceeds 15m.

SECTION: INSTALLATION INFORMATION

2

1.0 THIS SECTION DETAILS THE INSTALLATION INFORMATION REQUIRED FOR THE FIRTH FIBRAFT® FLOOR SYSTEM (THE SYSTEM). FULL INFORMATION ON THE DESIGN PROCEDURES NOT REQUIRING SPECIFIC ENGINEERING INPUT, AND REQUIREMENTS FOR THE SITE ASSESSMENT ARE DESCRIBED IN SECTION 1 OF THIS MANUAL (DESIGN INFORMATION). WHERE STANDARDS ARE REFERENCED INTHIS MANUAL THESE SHALL INCLUDE THE LATEST AMENDMENTS.

KDC - Approved Building Consent Document - BC210441 - Pg 51 of 512 - 30/08/2021 - ComplyNZ

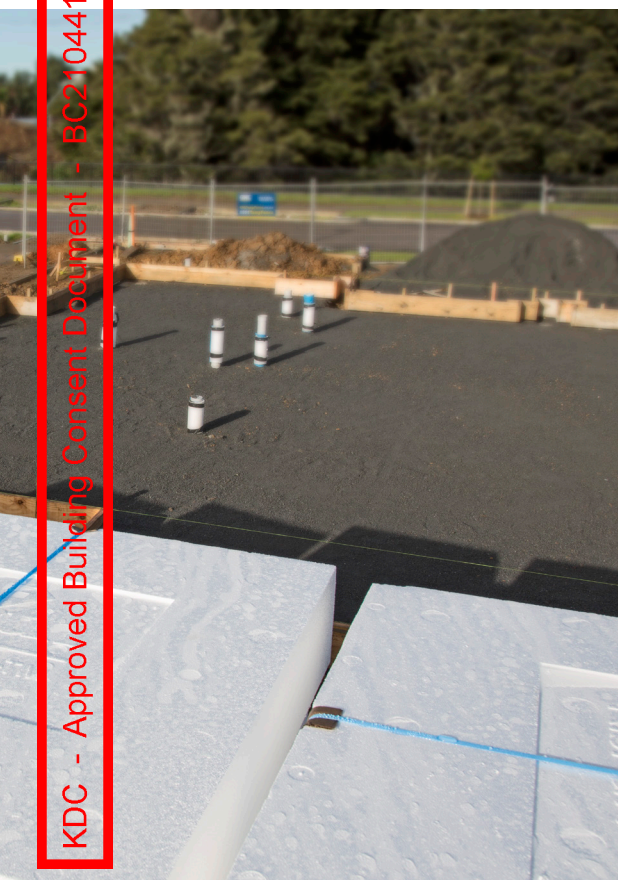

2.0 SITE REQUIREMENTS

2.1 General

The site requirements of this Manual are concerned solely with the soil conditions under or immediately adjacent to the system. If a site does not comply with this Manual, the system shall be subject to specific engineering design.

This Section shall only apply for building sites such that:

> The ground is as specified in Section 1 of this Manual;

> Any system erected at the top of a slope (whether fill compacted in accordance with NZS4431, or natural ground) shall be located as shown in Figure 1 so that the finished ground is always outside the dashed line shown. (The vertical distance, V, shall be measured to 50mm below the underside of the slab).

Where the finished ground does not comply with Figure 1, the slope shall be retained by a specifically designed retaining wall.

2.2 Temporary Excavations

No excavation shall take place at a location or in a manner where the stability of the foundation material is likely to be compromised. The backfilled material shall match the compaction and strength of, and have similar properties to, the surrounding material. The sides of the excavation shall be propped as necessary.

Temporary excavations shall be open for no longer than 48 hours and shall take place only above the critical depth line as shown on Figure 2. Should temporary excavations be required below this line, specific engineering design is required.

2.3 Surface Water

Surface water from the site shall not flow across the slab platform. For example, on cut and fill sites the ground uphill from the system shall be graded to direct any surface run-off away from the system as shown in Figure 3.

KDC - Approved Building Consent Document - BC210441 - Pg 52 of 512 - 30/08/2021 - ComplyNZ

Figure 1
Relationship Of RibRaft® To Sloping Ground Surface

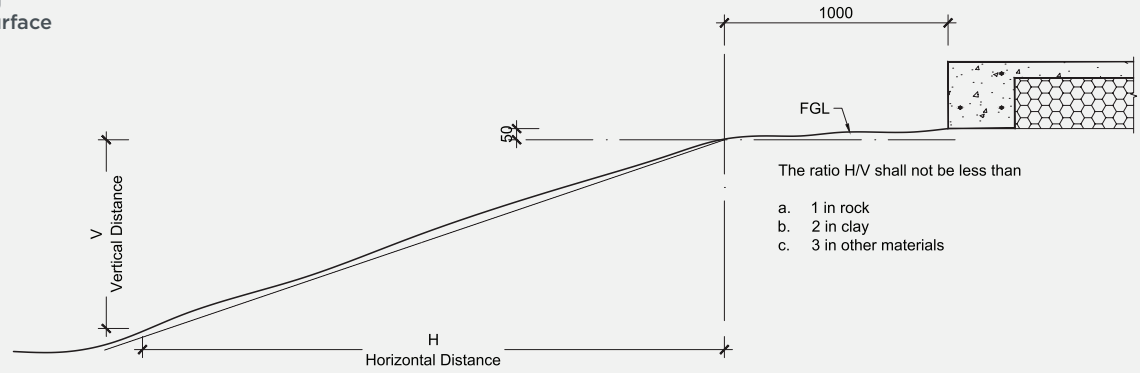

Figure 2
Temporary Excavation Limited

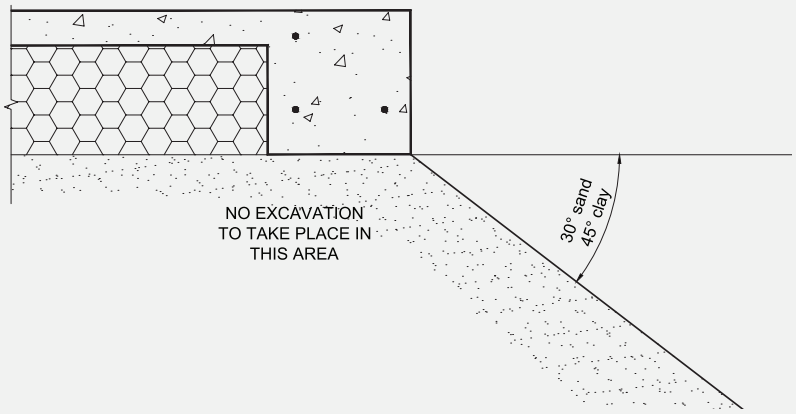

Figure 3
Site Grading

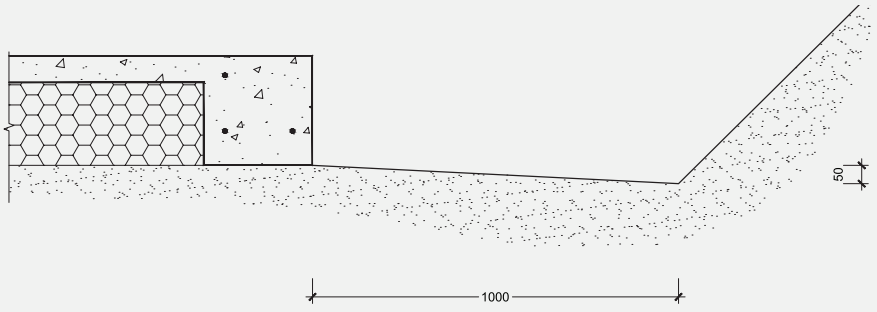

3.0 INSTALLATION PROCEDURE

3.1 Site Preparation

All vegetation, topsoil and other organic or deleterious material shall be removed from the area to be covered by the building (formation area) prior to commencing construction of the system.

KDC - Approved Building Consent Document - BC210441 - Pg 53 of 512 - 30/08/2021 - ComplyNZ

3.2 Earthworks

The formation area shall be cut or filled to a level approximately 330mm below finished floor level. Where fill is required to achieve this level, the fill shall be certified by a geotechnical engineer (outside the scope of this Manual) or shall be granular fill in accordance with Clause 7.5.3 of NZS 3604:2011 “Timber Framed Buildings”. The formation area shall also extend a distance equal to the thickness of the fill material beyond the slab perimeter as shown in Figure 4. The installer shall confirm the acceptability of the ground over the entire building platform before proceeding with the construction. Refer to Clause 3.5 of Section 1 (Design Information) for requirements.

Figure 4 Plan of Formation Area

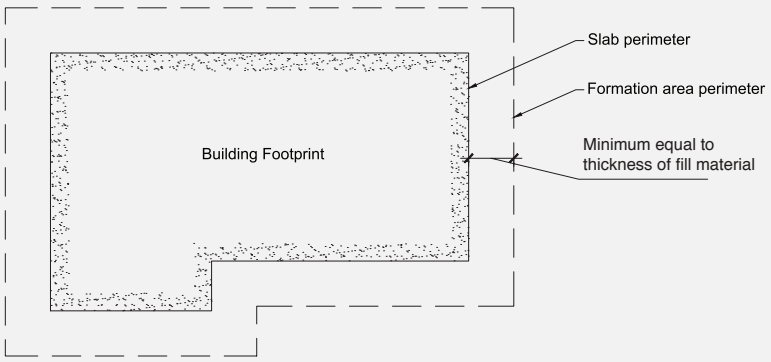

3.3 Shear Keys

Where shear keys are required, the holes shall be drilled following the site clearing and earthworks, in accordance with Clause 4 in this section, and prior to the construction of the system commencing.

3.4 Plumbing and Services

Plumbing and services required beneath the system should preferably be conveyed underground to their plan location then brought up through the system.
The trenching, placing, and bedding of the pipes/ducts and the backfilling of the trenches shall conform to the requirements of the consent documentation. Services shall not run along ribs or edge beams. The maximum diameters of the services shall be as dictated in Clause 6.3 of Section 1.

Where required, the services can be installed by removing unnecessary polystyrene and placing pipes within the pod depth. All pipes shall be held firmly in place and have temporary end covers. Any services crossing ribs or the edge beam horizontally shall be placed only within the middle third of the member. Except as noted in Figure 14 (Section 1) services crossing the ribs vertically shall also be constrained to the middle third of the width of the edge or internal load bearing rib. Except as noted in Figure 13 (section 1) at no stage shall any of the reinforcement bars be relocated or cut to allow for the services (it is acceptable, however to cut the mesh). In some instances this will dictate the location of the ribs. The pods shall be cut to allow for this and if necessary, the spacing of the ribs shall be decreased locally. There shall be 600mm minimum clear spacing in each direction between penetrations through the system.

Where the services pass through the top of the pods, the opening shall be sealed to prevent materials entering the subfloor cavities. (This can be achieved with Denso tape and a type of easily compressible foam.)

Larger penetrations or voids that are required, up to 450mm square (e.g. for shower waste/traps), shall be installed in accordance with all the conditions of this paragraph. These openings shall be trimmed with 1 HD12 bar (Grade 500E) 1500mm long placed along each side of the opening, tied to the mesh. One set of parallel bars shall be placed on top of the mesh and the other set placed under the mesh. These openings shall not be placed over a rib or edge beam. If necessary, the rib spacing shall be reduced or the pod layout altered to ensure that the opening occurs solely in the slab above a polystyrene pod. Penetrations such as these shall not be installed in garages or other areas where large (>3kN) point loads could be present. Only one penetration greater than 110mm is permitted in the slab above any single pod or part pod. Where two large openings are required to be in close proximity, an internal rib shall separate them. For these large penetrations/voids in the slab, the services shall not be within 25mm of the edges of the void through which they pass, and the opening shall be sealed to prevent materials entering the subfloor cavities. (This type of opening is normally only required for a shower waste/trap and the installation of the shower ensure that the void is sealed/covered).

Where a recess of up to 50mm is required in the topping to provide a rebate for a shower, the construction details shall be as shown in Figure 15 (Section 1).

KDC - Approved Building Consent Document - BC210441 - Pg 54 of 512 - 30/08/2021 - ComplyNZ

3.5 Sand Blinding

A layer of sand shall be placed, screeded and compacted over the building platform, extending to the outside edge of the perimeter foundation, refer Figure 5. The maximum thickness of this blinding layer shall be 50mm. The surface shall be level and a minimum of 305mm below finished floor level. A small plate compactor, vibrating roller or similar, should be used to compact the sand blinding layer. When the building platform is clay, it is essential that the blinding sand is compacted onto a clay surface that has not been softened by construction activities. If the clay has been softened (i.e. has a muddy surface layer due to construction activities), remove the softened material from under the RibRaft® ribs before placing the sand. If excavation lowers the clay surface to more than 50mm below the underside of the RibRaft®, fill shall be placed in accordance with Clause 7.5.3 of NZS 3604:2011 “Timber Framed Buildings”. The sand is required to be level to ensure that pods remain stable throughout the installation of the system.

3.6 Damp Proof Membrane

The damp proof membrane (DPM) material shall be polyethylene sheet in accordance with NZS 3604:2011. The DPM shall be laid over the entire building platform directly on top of the sand blinding layer, extending to the outside of the edge beam – refer Figure 5 below. The joints shall be lapped not less than 150mm and sealed with pressure sensitive tape not less than 50mm wide. All penetrations of the DPM by plumbing and services or punctures during construction shall also be sealed with pressure sensitive tape. The DPM may extend beyond the edge of the slab i.e. underneath the formwork, or may be folded and stapled up the inside of the formwork. The minimum requirement is that the DPM extends to the outside of the edge beam. It is very important that the DPM is not bunched up at the formwork. The installer shall ensure a square and tidy finish at the underside and at all corners of the edge beam.

Figure 5 Sand blinding / DPM / Formwork Details

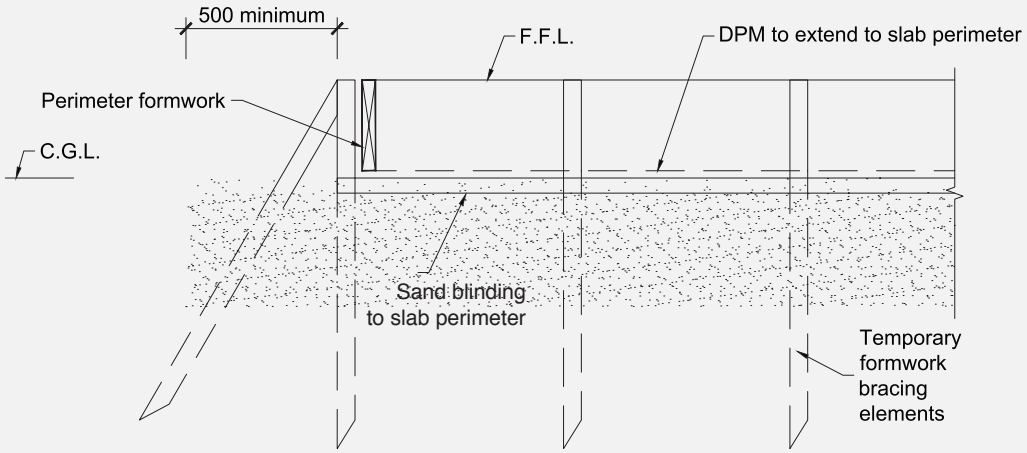

3.7 Edge Formwork

The edge formwork shall be constructed ensuring that the requirements of NZS 3109:1997 “Concrete Construction” are adhered to. The formwork shall be adequately supported and braced to prevent any buckling or warping. If the wall is to be constructed in masonry veneer, formwork for a masonry veneer rebate should be adequately fixed to the perimeter formwork.

Thorough cleaning of re-useable formwork and the use of release agents enhances the life and performance of formwork and maintains a quality surface finish.

KDC - Approved Building Consent Document - BC210441 - Pg 55 of 512 - 30/08/2021 - ComplyNZ

3.8 Laying the Pods and Spacers

The Firth RibRaft® polystyrene pods shall be laid out over the DPM in a regular waffle pattern ensuring direct contact with the ground across the entire pod. The edge beam shall be formed using the Firth approved 300mm spacers (refer Figure 9). These shall be placed at a maximum of 1200mm centres along the perimeter of the slab and one per pod or part pod. Ribs supporting a load bearing wall shall be formed using a minimum of one Firth approved 300mm spacer along the edge of each pod or part pod.

Except where a 300mm wide rib is required, each pod or part pod shall always be separated by 100mm using a minimum of one Firth approved 100mm spacer along each edge of each pod or part pod. The ribs in both directions shall form a waffle pattern throughout the slab. It is essential that the ribs and edge beams are straight when the concrete is poured, i.e. the pods need to be lined up. Figure 6 shows a detailed layout of the pods and spacers.

Where the shape of the house plan dictates, it may be more practical to consider the floor to be made up of different segments. The pods in each segment shall be in a regular waffle pattern – refer right hand side of Figure 7. Where these segments meet, the pods shall be cut to suit and the ribs made to join.The non right-angle rib junctions created by this approach are acceptable.

Alternatively, it is also acceptable to keep the orientation of the pods constant throughout the plan and have non right-angle junctions between the ribs and edge beam – refer left hand side of Figure 7.

As can be seen from Figure 7, it is not necessary for the pods to line up perfectly with the edge beam. It is acceptable to cut the pods (i.e. use part pods).

Figure 6
Detailed layout of Pods and spacers (mesh and top steel omitted for clarity)

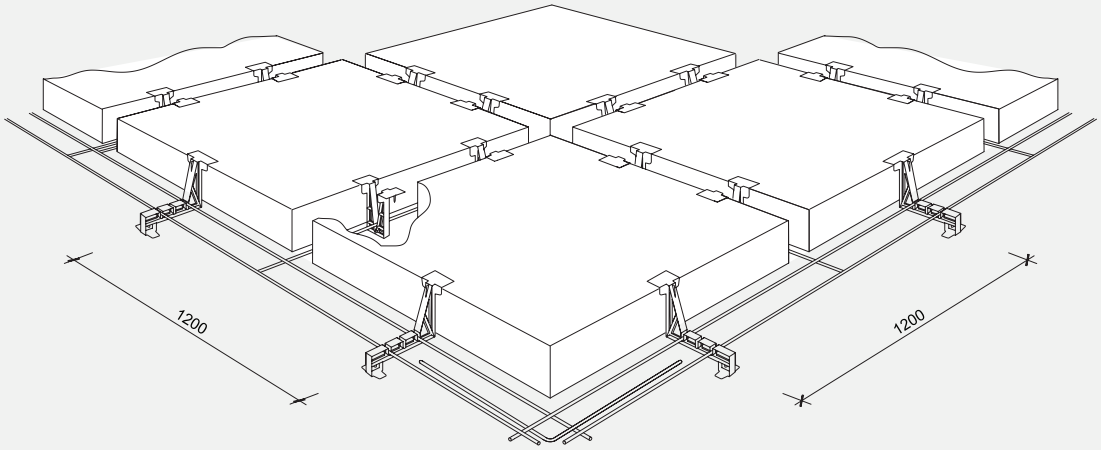

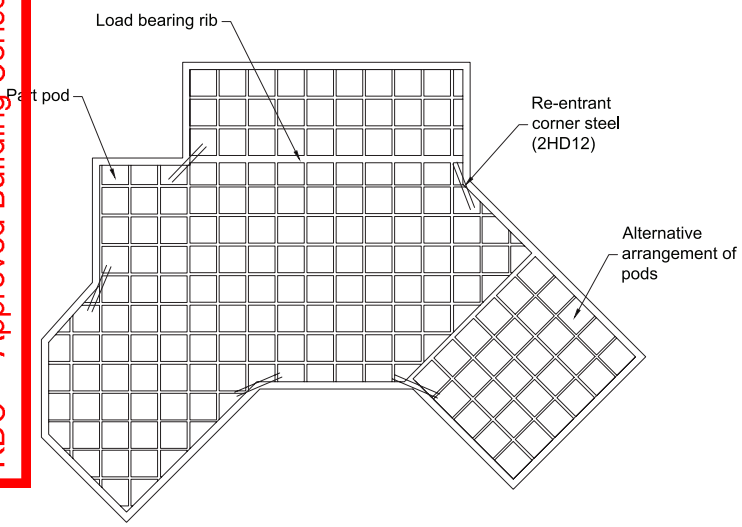

Figure 7 Typical Pod And Rib Layout

3.9 Reinforcing Steel

Reinforcing bars shall conform to NZS 4671:2001 “Steel Reinforcing Materials”. All bars shall be of deformed type (Grade 500E). All bends shall be made cold without fracture and in accordance with the bend diameters given in NZS 3109 “Concrete Construction”. Welded lap joints are not permitted.

Reinforcing steel in the slab shall consist of Welded Reinforcing Mesh complying with AS/NZS 4671:2001 with a minimum weight of 2.27kg/m, a lower characteristic stress of 500MPa, square configuration of orthogonal bars between 150 to 200mm centres, and ductility class L or E, hereafter referred to as “mesh”. The presence of Class E reinforcing bars in the ribs and beams provides adequate ductility of the system which allow the use of class L mesh. Typically the topping mesh reinforcement will be 665 mesh (class L) or SE62 ductile mesh, each being equally applicable

Figure 10 shows the detailed layout of the spacers and the steel in the edge beam and the standard ribs.

3.9.1 Edge Beam Steel

Two edge beam reinforcing bars shall be placed in the bottom of the edge beam and supported in the correct position by the Firth spacers, as shown in Figure 10. One edge beam bar shall be tied below the mesh at the perimeter of the area covered by the polystyrene pods as shown in Figure 10.

All steel shall be lapped a minimum of 60 bar diameters (720mm for 12mm steel). Tying of the edge beam steel is only required at corners. Figure 8 shows the layout for the edge beam bottom steel bars at the corner. The inner bottom bars and the top bars shall cross each other and extend to 75mm from the outside face of the edge beam as shown. These bars shall be tied together where they cross. For solutions using veneer rebates the top bars shall terminate 50mm from the inside face of the rebate and be tied where they cross.

KDC - Approved Building Consent Document - BC210441 - Pg 56 of 512 - 30/08/2021 - ComplyNZ

3.9.2 Rib Steel

Rib reinforcing steel shall be placed in the bottom of the internal ribs and supported in the correct position by the Firth or Wilton Joubert spacers (WJ). Figure 9 shows the detail of the Firth and WJ spacers, and Figure 10 shows a detailed section identifying how the steel is located in the spacers. The 300mm spacer shall be used for the 300mm wide internal ribs. These spacers ensure that cover to DPM below the base is greater than 45mm and cover to the exterior perimeter is 75mm.

All steel shall be lapped a minimum of 60 bar diameters (720mm for 12mm steel). At junctions with the edge beam, each rib steel bar shall sit on top of the edge beam bars, and extend to the outermost bar. The 75mm cover to the edge of the beam shall still be allowed for. One HD12 bar (Grade 500E) shall be placed in the bottom of each 300mm wide rib. For perimeter 300mm ribs a HD12 bar is also required in the top at the beam.

3.9.3 Mesh Reinforcing

Mesh reinforcing shall be placed over the pods and supported on 40mm mesh chairs spaced at a minimum of 1200mm centres, with at least two mesh chairs placed per pod and at least one per part pod. At laps the overlap of the outermost cross wires of the sheets shall be the spacing of the wires plus 50mm.

3.9.4 Re-entrant Corner Steel

Two HD12 bars (Grade 500E), 1200mm long tied to the top of the mesh at 200mm centres, with 50mm cover to the internal corner as detailed in Figure 7 (this steel is to help reduce the width of cracks that may develop at this location)

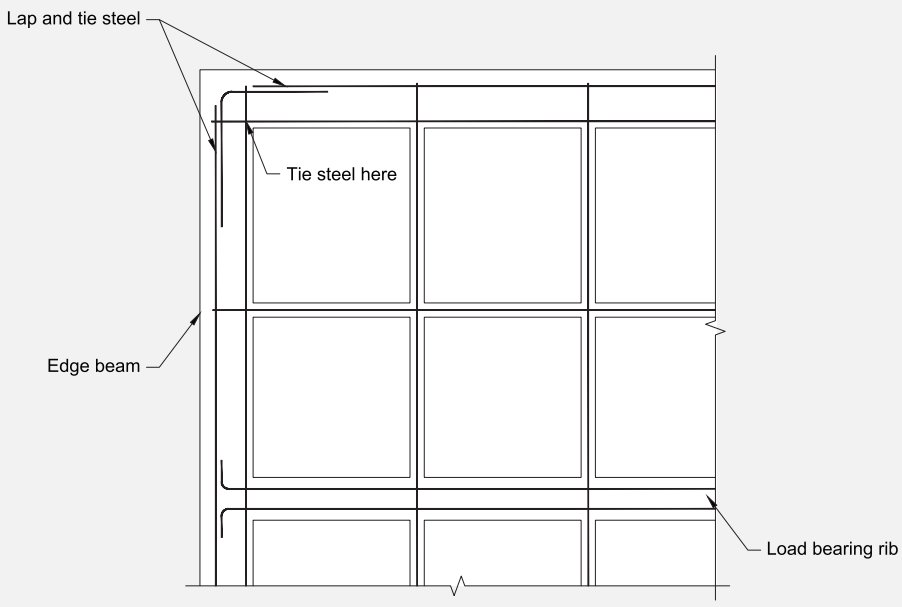

Figure 8 Corner steel layout

3.10 Concrete Installation

To comply with this manual, Firth Certified Concrete® must be used. Concrete placing, finishing and curing shall be in accordance with NZS 3109:1997, Clause 7.

3.10.1 Placing

Only Raftmix or Raftmix25 concrete supplied by Firth Industries, shall be used in the floor. These two different concrete mixes shall be used in the following instances:

> Raftmix – a 20MPa 100mm slump mix available as a pump mix suitable for 100mm pump lines available in either a 13mm or more usually a 19mm nominal aggregate size, or as a structural (non-pump) mix

> Raftmix25 – a 25MPa 100mm slump mix available as a pump mix suitable for 100mm pump lines available in either a 13mm or more usually a 19mm nominal aggregate size, or as a structural (non-pump) mix. This mix shall be specified for buildings constructed in the 'sea spray zone' (i.e. within 500m of the sea including harbors, within 100m of tidal estuaries or inlets, on offshore islands and elsewhere defined as exposure Zone D in 4.2.3.3 of NZS3604).

Figure 9
Spacer Details

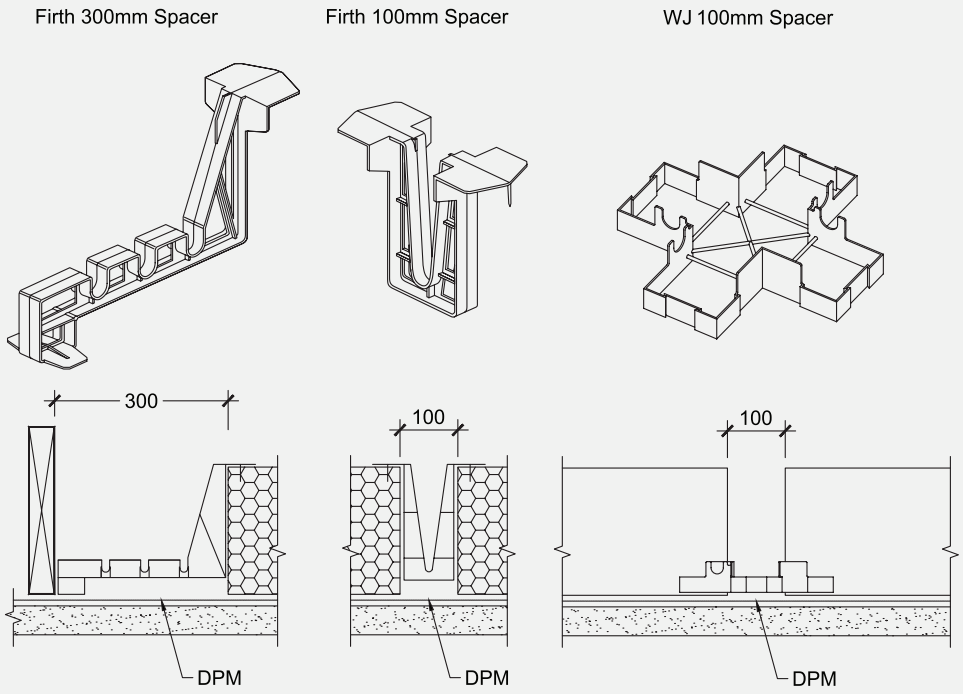

The concrete supplied by Firth shall be poured in such a way to ensure that the pods remain in position during placing (Firth recommends that small amounts of concrete be placed on top of the pods prior to the ribs being filled). The concrete shall be compacted with the use of an immersion vibrator around all steel and into all corners of the formwork.

KDC - Approved Building Consent Document - BC210441 - Pg 57 of 512 - 30/08/2021 - ComplyNZ

3.10.2 Finishing

Screeding with the aid of a level shall commence immediately after compaction. Unless specifically installed as a screeding datum, the top of the formwork shall not be assumed as level and thus shall not be used for screeding purposes. Final finishing with a trowel shall take place after all the bleed water has evaporated. The edge of the slab and rebates shall be tooled to prevent chipping of the top of the slab.

Early age care of the slab shall be in accordance with good trade practice appropriate for the weather conditions – refer CCANZ website sections if further guidance is required:

www.ccanz.org.nz/page/Early-Age-Crack-Control.aspx	Early Age Crack Control
www.ccanz.org.nz/page/Hot-and-Cold-Weather-Concreting.aspx	Hot and Cold Weather Concreting

The surface shall be a blemish-free surface to class U3 finish (Refer NZS 3114:1987 “Specification for Concrete Finishes”).

3.10.3 Curing

Proper curing of the concrete must take place immediately after finishing the concrete. One of the following methods of curing is recommended:

> Ponding or continuous sprinkling of water.

> Placing a wet covering or plastic membrane over the slab.

> The use of liquid membrane curing compounds. However if these are used, they must be compatible with any subsequent applied surfacing.

3.11 Shrinkage Control Joints

Shrinkage control joints reduce the risk of unwanted cracks, and their placement needs to be carefully considered where uncontrolled cracking could be unacceptable. Two types are described here: saw cut joints (which are tied joints), and free joints.

3.11.1 Saw Cut Joints

Saw cuts are located at positons in which the concrete is likely to crack due to stresses induced by restrained shrinkage. The aim of providing them is for the concrete to crack at the bottom of the saw cut thus minimizing the potential for a visible crack wandering over the surface. The level of reinforcement provided in a RibRaft® mean that cracks have no structural implications being only an aesthetics issue. Factors to consider are the type of floor finish, the location of ribs and ground beams, underfloor heating and the effect of piles restraining shrinkage.

When warm sunny days are followed by cool nights, the change in temperature can cause cracking. Hence preference should be given to using early entry saws which are used immediately after finishing. Shrinkage control joints cut using diamond blades shall be cut as early as possible which is typically within 24 hours of hardening in summer, and 48 hours in winter. They shall be cut to a depth of 25mm. Shrinkage control joints do not guarantee to eliminate all visible or unwanted cracks.

Joints shall be positioned to coincide with major changes in floor plan. Where concrete is to be exposed, for example in a garage, or brittle covering placed over, the maximum intermediate bay sizes shall be limited to 5m. Bay dimensions formed by shrinkage control joints shall be limited to a maximum ratio of length:width of 1.5:1. Shrinkage control joints shall be placed over 100mm wide internal ribs wherever possible. Where a shrinkage control joint runs along the line of a 300mm wide load bearing rib, then the joint shall be located directly above one edge of that rib.

In order to limit the width of cracks at re-entrant, or internal corners, extra steel shall be placed on top of the mesh. These shall be 2-HD12 bars (grade 500E), 1200mm long tied to the top of the mesh at 200mm centres, with 50mm cover to the internal corner – refer Figure 7.

KDC - Approved Building Consent Document - BC210441 - Pg 58 of 512 - 30/08/2021 - ComplyNZ

3.11.2 Free Joints

Where the length of the floor exceeds 30m a free joint shall be provided as detailed in Section 1, Figure 12. Movement, shrinkage and thermal, will occur over this joint so it shall be positioned to minimize the impact of this movement on floor coverings and wall elements.

Where the bottom of the RibRaft® is not flat (for example the floor incorporates a step down), free joints shall be provided if the distance from the step down to edge of slab exceeds 15m.

Figure 10 Detailed Section

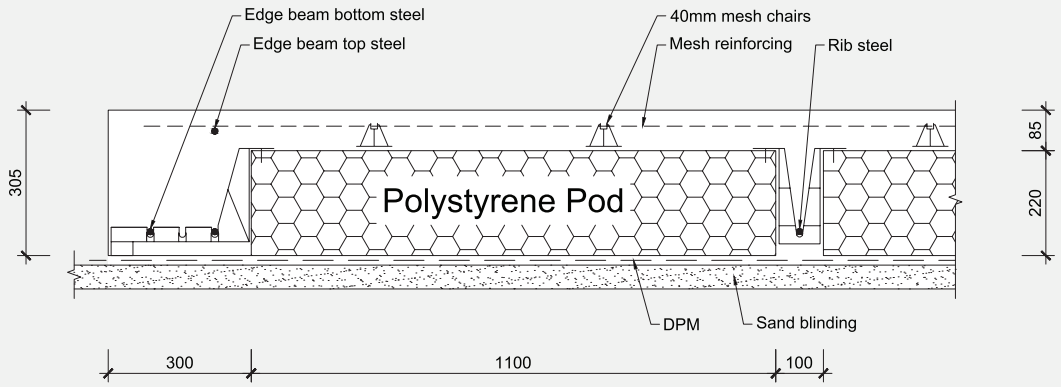

3.12 Removal of Formwork

The formwork shall not be removed prior to 12 hours after the slab has been finished. No installation loads are to be placed on the system before adequate curing has taken place.

3.13 Masonry Veneer

Where the building is to be clad with masonry veneer, the rebate in the edge beam shall be waterproofed with a bituminous sealer due to the possibility of ponding of water. Firth recommends a Flintcote® or equivalent coating on both the vertical and horizontal faces of the rebate.

3.14 Landscaping/Paving

Landscaping and/or paving adjacent to the slab shall be kept as a minimum the specified distance below finished floor level as required by NZS 3604:2011. The landscaping shall allow for large trees to be kept sufficiently away from the edge of the slab.This is to prevent the tree roots from disturbing the soil moisture conditions under the slab. As a guide, trees should be as far away from the edge of the slab as they are tall when fully grown.

3.15 Ongoing Maintenance

The building owner shall ensure that the ground surrounding the system be maintained so that the integrity of the system is not jeopardised. In other words, at no time shall the ground immediately adjacent to the system be allowed to settle away to expose the underside of the slab.

KDC - Approved Building Consent Document - BC210441 - Pg 59 of 512 - 30/08/2021 - ComplyNZ

4.0 SHEAR KEYS

Shear keys, if required, shall be provided to conform to the requirements of Section 1 of this Manual. Holes for the shear keys shall be drilled at least 1000mm deep. Into the bottom of each hole a RibRaft® Shear Key Support shall be placed. Every precaution shall be taken to ensure that the shear key support is laid level and at the base of the hole. The minimum depth of concrete placed on the support shall be 900mm. Refer to Figure 11 for construction details.

The connection steel (2HD12 Grade 500E) shall be secured in place and held during pouring to ensure the bars are correctly located. The concrete for the shear keys can be placed separately to the rest of the floor and shall be finished level to the top of the sand blinding layer, or poured in one pour with the RibRaft® floor. If poured separately the top surface of the shear key shall be finished rough to ensure a good join to the Firth Raftmix concrete in the system and the DPM shall be neatly cut around the shear keys.

KDC - Approved Building Consent Document - BC210441 - Pg 60 of 512 - 30/08/2021 - ComplyNZ

Figure 11 Shear Pile Construction Detail

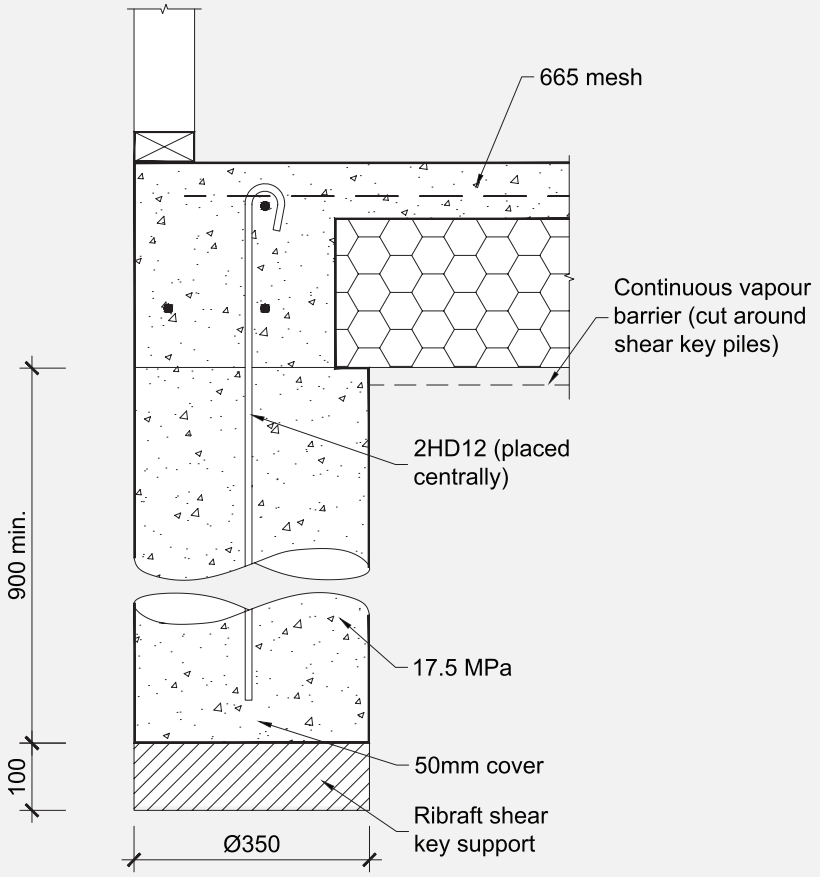

SECTION: VERIFICATION

3

KDC - Approved Building Consent Document - BC210441 - Pg 61 of 512 - 30/08/2021 - ComplyNZ

1.0 DESIGN

Verification that the design complies with the structural limitation outlined in this Manual is the responsibility of the designer, and shall be confirmed by the Building Control Authority issuing the Building Consent. Solutions outside the limitations outlined in this Manual will require specific engineering design.

2.0 CONSTRUCTION

The RibRaft® foundation system has been designed to accommodate structures complying with the non specific design standards NZS3604 or NZS4229. With these types of structures the Building Control Authority specifies the inspections required and often conducts these. A similar construction verification process shall be applied to the RibRaft® system.

To assist inspection the following check list has been prepared for structures complying with the limitation:

PRE-POUR INSPECTION CHECK LIST

- GOOD GROUND CONFIRMED AS PER NZS3604, CLAUSE 3.1.3. OR SCALA OR SHEAR VANES TESTS CONFIRM ADEQUATE BEARING CAPACITY.
- VEGETATION, TOPSOIL, ORGANIC OR DELETERIOUS MATERIAL REMOVED.
- PROXIMITY TO SLOPE-GROUND SURFACE IS ALWAYS ABOVE DASH LINE SHOWN IN FIGURE 1.
- SHEAR PILES (WHERE REQUIRED) IN PLACE AND REINFORCEMENT PROTRUDING.
- FORMATION AREA EXTENDS AT LEAST THE DEPTH OF GRANULAR FILL BEYOND BUILDING FOOTPRINT.
- STEPS IN THE FORMATION ARE DETAILED IN ACCORDANCE WITH THIS MANUAL.

Figure 1
Relationship of RibRaft® To Sloping Ground Surface

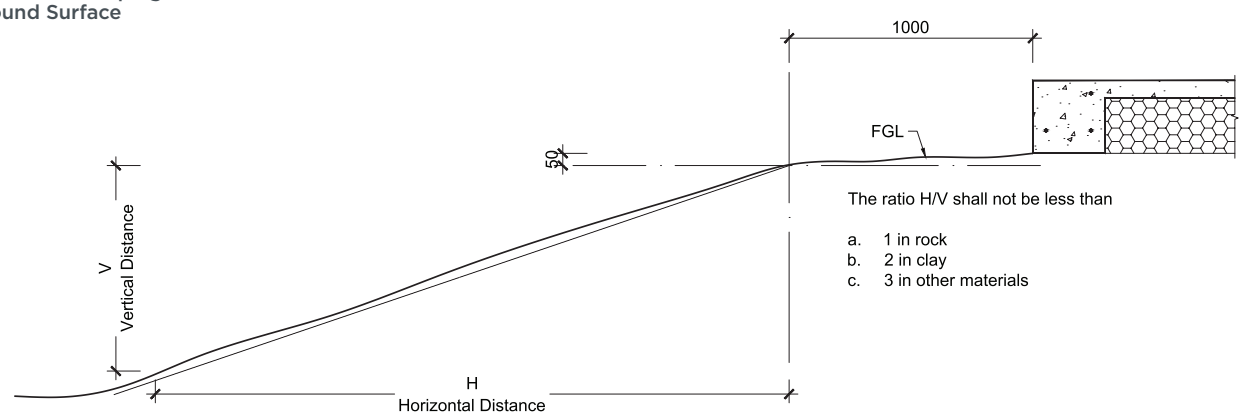

CODEMARK
CM70056

KDC - Approved Building Consent Document - BC210441 - Pg 62 of 512 - 30/08/2021 - ComplyNZ

PRE-LAYOUT INSPECTION CHECK LIST: DAMP PROOF MEMBRANE IN PLACE

PERIMETER FOUNDATION	○ WIDTH 300MM(1) ○ REINFORCEMENT 2 X HD12 BOTTOM, 1 X HD12 TOP ○ FIRTH SUPPLIED SPACER USED AT 1.2M MAXIMUM CENTRES
INTERNAL RIBS	○ WIDTH 100MM ○ REINFORCEMENT 1 X HD12 ○ FIRTH SUPPLIED SPACER, MAX SPACING OF ONE PER POD OR PART POD
LOAD BEARING RIBS	○ WIDTH 300MM ○ REINFORCEMENT 2 X HD12 BOTTOM ○ FIRTH SUPPLIED SPACER, MAX SPACING OF ONE PER POD OR PART POD
PODS	○ FIRTH SUPPLIED RIBRAFT® POD
MESH	○ 40MM CHAIRS, 1.2M MAX CENTRES, MIN TWO PER POD OR ONE PER PART POD ○ MESH IN PLACE AND 665 OR SE62 ○ MESH LAPS OVERLAP OF OUTERMOST CROSSWIRE = MESH SPACING + 50MM
REINFORCEMENT	○ 2 X HD12 BARS 1.2M LONG PROVIDED AT RE-ENTRANT CORNERS ○ LAPS FOR 12MM REINFORCEMENT MINIMUM OF 720MM
CONCRETE	○ COVER TO PODS MINIMUM OF 85MM OR 110MM IF INFLOOR HEATING USED. ○ FIRTH RAFTMIX ORDERED
SERVICE PENETRATIONS	○ NO REINFORCEMENT (WITH EXCEPTION OF MESH) CUT TO ALLOW PASSAGE OF SERVICE PIPES. REFER CLAUSE 6.3 OF SECTION 1 FOR EXCEPTIONS ○ PIPES WRAPPED WITH MINIMUM 6MM THICKNESS OF IMPERMEABLE COMPRESSIBLE MATERIAL WHERE IN CONTACT WITH CONCRETE ○ DIAMETER/SIZE OF PENETRATIONS AS PER TABLE 6, SECTION 1 OF THIS MANUAL

(1) At locations of service penetrations the width of the perimeter foundation maybe locally increased. Refer Figure 14 Section 1 for details.

KDC - Approved Building Consent Document - BC2 10441 - Pg 63 of 512 - 30/08/2021 - ComplyNZ



CONCRETE & MASONRY PRODUCTS: A SUSTAINABLE BUILDING OPTION & SOLUTION

- Environmentally compliant manufacturing plants
- Surplus water and some aggregates recycled
- Low transport impacts
- Leftover concrete returned from construction sites
- Passive solar heated thermal mass makes completed buildings more energy-efficient
- Most wash water returned from construction sites
- Highly durable, low maintenance buildings and no rot
- High degree of noise control
- Inherent fire resistance
- Overall longer effective building life
- Demolished concrete can be recycled as hard fill or aggregate

© Firth Industries 2020. All rights reserved. Content in this document is protected under the Copyright Act 1994. No material may be reproduced in whole or in part without the written consent of the copyright holder.

0800 FIRTH 1 (347841)
FIRTH.CO.NZ

Approved Building Consent Document - BC210441 - Pg 64 of 512 - 30/08/2021 - ComplyNZ - KDC

PRODUCT CERTIFICATE

Firth Ribraft® Floor System

CERTIFICATE NO: CM70056 Rev 3
Date of issue: 26 March 2021

1 CERTIFICATE HOLDER DETAILS

Fletcher Concrete and Infrastructure Ltd
T/A Firth Industries
810 Great South Road
Penrose, Auckland 1061

Info@firth.co.nz
Ph: 0800 800 576
www.firth.co.nz

2 PRODUCT CERTIFICATION BODY

Bureau Veritas Australia Pty Ltd
3/435 Williamstown Road
Port Melbourne VIC 3207
Australia

Ph: 1800 855 190
www.bureauveritas.com.au

Bureau Veritas Australia Pty Ltd

The complaints process for this certificate can be found here:
www.bureauveritas.com.au/your-feedback

KEY INFORMATION

3 SUMMARY OF DESCRIPTION OF BUILDING METHOD OR PRODUCT

The Firth RibRaft® Floor System comprises of polystyrene pods, steel reinforcing rods, plastic spacers and Firth RibRaft® concrete.

Continuation of description can be found in item 9. Supporting Information about Description of Building Product or Method.
Matters that should be taken into account in the use or application of the building method or product can be found in item 6. Conditions and Limitations of Use.

4 SUMMARY OF INTENDED USE OF BUILDING METHOD OR PRODUCT

The Firth RibRaft® Floor System is a method of concrete floor construction, suitable for all slab-on-ground concrete floors for domestic or residential buildings that fall within the scope of NZS 3604:2011 Timber framed buildings.

Continuation of intended use can be found in item 8. Supporting Information about Intended use of Building Product or Method.

5 BUILDING CODE PROVISIONS

The performance clauses of the New Zealand Building Code that are relevant to the intended use and with which the building method or product complies or contributes to (where used as part of a system).

B1 Structure: B1.3.1, B1.3.2, B1.3.3 (a, b, f, g, h, q, m), B1.3.4
B2 Durability: B2.3.1(a), B2.3.2(a)
E2 External Moisture: E2.3.3, E2.3.7
F2 Hazardous Building Materials: F2.3.1
H1 Energy Efficiency: H1.3.1 (contributes to), H1.3.2E (contributes to)

How the building method or product complies or contributes can be found in item 12. Basis for Certification. Any qualifications on the extent of that compliance can be found in item 6. Conditions and limitations of use.

This certificate is issued by an independent certification body accredited by JAS-ANZ, the product certification accreditation body appointed by the Chief Executive of the Ministry of Business, Innovation and Employment under the Building Act 2004.
The Ministry does not in any way warrant, guarantee, or represent that the building method or product that is the subject of this certificate conforms with the New Zealand Building Code, nor accept any liability arising out of the use of the building method or product.
The Ministry disclaims to the extent permitted by law, all liability (including negligence) for claims of losses, expenses, damages, and costs arising as a result of the use of the building method(s) or product(s) referred to in this certificate.

This certificate may only be reproduced in its entirety. It is advised to check that this certificate is currently valid and not withdrawn or suspended by referring to the Register of Product Certificates on the Building Performance website http://www.building.govt.nz.
CERTIFICATE V1.3

KDC - Approved Building Consent Document - BC210441 - Pg 65 of 512 - 30/08/2021 - ComplyNZ

PRODUCT CERTIFICATE

Firth Ribraft® Floor System

6 CONDITIONS AND LIMITATIONS OF USE

1. The Firth RibRaft® Floor System shall only be used in buildings which fall within the scope of NZS 3604:2011 – Timber-framed buildings, located:
   a) Where the Seismic Hazard Factor Z (defined in NZ 1170.5:2004) is less than or equal to 0.45 (refer to Figure 6 of the Firth RibRaft® Technical Manual January 2020)
   b) in any wind zones up to and including Extra High
   c) in areas with snow loads up to 2.0 kPa
   d) in all exposure zones (except microclimates)
   e) and where the ground Ultimate Bearing Capacity exceeds the value specified in Table 2 for the types of construction in Table 1 of the Firth RibRaft® Technical Manual January 2020.
2. The Firth RibRaft® Floor System shall be designed and installed in accordance with the Firth RibRaft® Technical Manual January 2020.

NOTE: Together, items 3, 4, 5 and 6 define scope of use.

7 HEALTH AND SAFETY INFORMATION

The compliance with any manufacturer's installation instructions, maintenance, OH & S statements, MSDS's and other Health and Safety declarations will provide the necessary Health and Safety Information pertaining to the product.

8 SIGNATURES

Sam Guindi
Product Certification Manager

For and on behalf of
Bureau Veritas Australia Pty Ltd

Dene Cook
Divisional Technical Manager

For and on behalf of
Firth Industries

This certificate is issued by an independent certification body accredited by JAS-ANZ, the product certification accreditation body appointed by the Chief Executive of the Ministry of Business, Innovation and Employment under the Building Act 2004.
The Ministry does not in any way warrant, guarantee, or represent that the building method or product that is the subject of this certificate conforms with the New Zealand Building Code, nor accept any liability arising out of the use of the building method or product.
The Ministry disclaims to the extent permitted by law, all liability (including negligence) for claims of losses, expenses, damages, and costs arising as a result of the use of the building method(s) or product(s) referred to in this certificate.

This certificate may only be reproduced in its entirety. It is advised to check that this certificate is currently valid and not withdrawn or suspended by referring to the Register of Product Certificates on the Building Performance website http://www.building.govt.nz.
CERTIFICATE V1.3

KDC - Approved Building Consent Document - BC210441 - Pg 66 of 512 - 30/08/2021 - ComplyNZ

PRODUCT CERTIFICATE

Firth Ribraft® Floor System

SCHEDULE: INFORMATION THAT SUPPORTS KEY INFORMATION

9 SUPPORTING INFORMATION ABOUT DESCRIPTION

The system consists of the following components:

- RibRaft® Polystyrene Pod 1100mm x 1100mm x 220mm. 300mm thick pods are also available for deeper edge beams and internal ribs.
- Firth Pod and Reinforcement spacer (300mm and 100mm)
- Firth Reinforcement chair
- Reinforcement Grade 500E
- Mesh reinforcement
- Firth RibRaft® Concrete 20MPa or 25 MPa
- Sand Blinding
- DPM (250 micron polyethylene sheet)

10 SUPPORTING INFORMATION ABOUT INTENDED USE

Further details regarding the use of the product can be found in Firth RibRaft® Technical Manual, January 2020.

11 SUPPORTING INFORMATION ABOUT CONDITIONS AND LIMITATIONS OF USE

N/A

This certificate is issued by an independent certification body accredited by JAS-ANZ, the product certification accreditation body appointed by the Chief Executive of the Ministry of Business, Innovation and Employment under the Building Act 2004.
The Ministry does not in any way warrant, guarantee, or represent that the building method or product that is the subject of this certificate conforms with the New Zealand Building Code, nor accept any liability arising out of the use of the building method or product.
The Ministry disclaims to the extent permitted by law, all liability (including negligence) for claims of losses, expenses, damages, and costs arising as a result of the use of the building method(s) or product(s) referred to in this certificate.

This certificate may only be reproduced in its entirety. It is advised to check that this certificate is currently valid and not withdrawn or suspended by referring to the Register of Product Certificates on the Building Performance website http://www.building.govt.nz.
CERTIFICATE V1.3

KDC - Approved Building Consent Document - BC210441 - Pg 67 of 512 - 30/08/2021 - ComplyNZ

PRODUCT CERTIFICATE

Firth Ribraft® Floor System

12 BASIS FOR CERTIFICATION

B1 Structure - By analysis and comparison with Acceptable Solution B1/VM1
B2 Durability – By analysis and comparison with Acceptable Solution B2/AS1 and Verification Method B2/VM1
E2 External moisture – By analysis and comparison with Acceptable Solution E2/AS1
H1 Energy efficiency - By analysis and comparison with Acceptable Solution H1/AS1
F2 Hazardous building materials - By comparison with performance Clause F2.3.1

13 SUPPORTING DOCUMENTATION FOR CERTIFICATION

1. Acceptable Solutions and Verification Methods for New Zealand Building Code Clause B1 Structure 1st Edition (Amendment 19), 28 November 2019
2. Acceptable Solutions and Verification Methods For New Zealand Building Code Clause B2 Durability (Amendment 12), 28 November 2019
3. Acceptable Solutions and Verification Methods For New Zealand Building Code Clause E2 External moisture 3rd edition (Amendment 9), 27 June 2019
4. Structural assessment by Holmes Consulting Firth Ribraft Concrete Floor System, May 2012
5. OPUS Report "Compliance of Firth of Ribraft System with NZBC Clause B2 Durability", 24 May 2010
6. eCubed Building Workshop Report on R value of Ribraft Concrete Floor System, 17 September 2010
7. Firth RibRaft® Technical Manual, January 2020
8. NZS 3604:2011 Timber framed buildings
9. NZS 4214:2006 Methods of determining the total thermal resistance of parts of buildings

This certificate is issued by an independent certification body accredited by JAS-ANZ, the product certification accreditation body appointed by the Chief Executive of the Ministry of Business, Innovation and Employment under the Building Act 2004.
The Ministry does not in any way warrant, guarantee, or represent that the building method or product that is the subject of this certificate conforms with the New Zealand Building Code, nor accept any liability arising out of the use of the building method or product.
The Ministry disclaims to the extent permitted by law, all liability (including negligence) for claims of losses, expenses, damages, and costs arising as a result of the use of the building method(s) or product(s) referred to in this certificate.

This certificate may only be reproduced in its entirety. It is advised to check that this certificate is currently valid and not withdrawn or suspended by referring to the Register of Product Certificates on the Building Performance website http://www.building.govt.nz.
CERTIFICATE V1.3

KDC - Approved Building Consent Document - BC210441 - Pg 68 of 512 - 30/08/2021 - ComplyNZ

PRODUCT CERTIFICATE

Firth Ribraft® Floor System

14 CONDITIONS RELATING TO NOTIFICATION

(a) the certificate holder notifies the product certification body (Bureau Veritas) in writing of any intended change to any of the following particulars:
(i) the name, address, or contact details of the certificate holder:
(ii) any address of a location where a certified product is produced or manufactured:

(b) the certificate holder notifies the product certification body (Bureau Veritas) in writing of any intended change, modification, or alteration to any of the following:
(i) the certified building method or product:
(ii) the method of its production or manufacture:
(iii) the product quality plan prepared in respect of the certified building method or product:
(iv) the application or installation instructions for the certified building method or product:
(v) any documentation relating to the use and maintenance of the certified building method or product:

(c) if the certificate holder has any reason to suspect that the certified building method or product does not comply with the Building Code, the certificate holder notifies the product certification body (Bureau Veritas) in writing of the reason for that suspicion:

(d) if the certificate holder or the product certification body (Bureau Veritas) finds that a certified building method or product that has been released on the market does not comply with the Building Code, the certificate holder discloses that fact in disclosure statements published in a form that is acceptable to the product certification body and to the chief executive:

(e) if the certificate is suspended or revoked, the certificate holder—
(i) notifies all customers to whom the building method or product is regularly supplied; and
(ii) immediately ceases using the certificate, the mark of conformity, and any reference to the number of the certificate.

This certificate is issued by an independent certification body accredited by JAS-ANZ, the product certification accreditation body appointed by the Chief Executive of the Ministry of Business, Innovation and Employment under the Building Act 2004.
The Ministry does not in any way warrant, guarantee, or represent that the building method or product that is the subject of this certificate conforms with the New Zealand Building Code, nor accept any liability arising out of the use of the building method or product.
The Ministry disclaims to the extent permitted by law, all liability (including negligence) for claims of losses, expenses, damages, and costs arising as a result of the use of the building method(s) or product(s) referred to in this certificate.

This certificate may only be reproduced in its entirety. It is advised to check that this certificate is currently valid and not withdrawn or suspended by referring to the Register of Product Certificates on the Building Performance website http://www.building.govt.nz.

4161P Paul Industries Underlays, Foil & DPC

Paul Industries
+297 07 5788209
info@paulindustries.co.nz
www.paulindustries.co.nz

SUPPORTING DOCUMENTS

BRANZ Appraisal 715 - Fast Wrap FlameSpec SS Roof Underlay

Ref 10555. Uploaded 12 Aug 2020

Purpose: Performance

BRANZ Appraisal 853 - Fast Wrap ULTRA-BOND Sill Tape

Ref 10556. Uploaded 12 Aug 2020

Purpose: Performance

KDC - Approved Building Consent Document - BC210441 - Pg 69 of 512 - 30/08/2021 - ComplyNZ

KDC - Approved Building Consent Document - BC210441 - Pg 70 of 512 - 30/08/2021 - ComplyNZ

BRANZ Appraised
Appraisal No. 715 [2017]

FAST WRAP FLAMESPEC SS ROOF UNDERLAY

Appraisal No. 715 (2017)
This Appraisal replaces BRANZ Appraisal No. 715 (2011)
Amended 29 June 2018.

BRANZ Appraisals
Technical Assessments of products for building and construction.

Judea Holdings Ltd, T/A Paul Industries
PO Box 308
Tauranga 3140
Free phone: 0800 330 320
Tel: 07 578 8209
Fax: 07 928 5244
Web: www.paulindustries.co.nz

BRANZ
1222 Moonshine Rd,
RD1, Porirua 5381
Private Bag 50 908
Porirua 5240,
New Zealand
Tel: 04 237 1170
branz.co.nz

FlameSpec SS

SYNTHETIC SELF SUPPORT ROOFING UNDERLAY

Product

1.1 Fast Wrap FlameSpec SS Roof Underlay is a synthetic building underlay for use under roof claddings. The product consists of a micro-porous water resistant film laminated to two layers of non woven spun-bonded polyolefin.

Scope

2.1 Fast Wrap FlameSpec SS Roof Underlay has been appraised for use as a self-supporting roof underlay on buildings within the following scope:

- the scope limitations of NZBC Acceptable Solution E2/AS1, Paragraph 1.1 with regards to building height and floor plan area; and,
- with masonry tile roof cladding; and,
- with metal tile roof cladding; and,
- with profiled metal roof cladding; and,
- situated in NZS 3604 Wind Zones up to, and including Extra High.

Building Regulations

New Zealand Building Code (NZBC)

3.1 **In the opinion of BRANZ, Fast Wrap FlameSpec SS Roof Underlay, if used, designed, installed and maintained in accordance with the statements and conditions of this Appraisal, will meet, or contribute to meeting the following provisions of the NZBC:**

Clause B2 DURABILITY: Performance B2.3.1 (a), not less than 50 years, B2.3.1 (b), 15 years and B2.3.2. Fast Wrap FlameSpec SS Roof Underlay meets these requirements. See Paragraphs 9.1 and 9.2.

Clause C3 FIRE AFFECTING AREAS BEYOND THE FIRE SOURCE: Performance C3.4 (c). Fast Wrap FlameSpec SS Roof Underlay meets this requirement. See Paragraph 10.1.

Clause E2 EXTERNAL MOISTURE: Performance E2.3.2. When used as part of the roof cladding system, Fast Wrap FlameSpec SS Roof Underlay will contribute to meeting this requirement. See Paragraphs 12.1 and 12.2.

Clause F2 HAZARDOUS BUILDING MATERIALS: Performance F2.3.1. Fast Wrap FlameSpec SS Roof Underlay meets this requirement and will not present a health hazard to people.

Readers are advised to check the validity of this Appraisal by referring to the Valid Appraisals listing on the BRANZ website, or by contacting BRANZ.

KDC - Approved Building Consent Document - BC210441 - Pg 71 of 512 - 30/08/2021 - ComplyNZ

Technical Specification

4.1 Fast Wrap FlameSpec SS Roof Underlay is a synthetic building underlay for use under roof claddings. The product consists of a micro-porous water resistant film laminated to two layers of non woven spun-bonded polyolefin. Fast Wrap FlameSpec SS Roof Underlay is coloured grey on the top face and white on the bottom face.

4.2 Fast Wrap FlameSpec SS Roof Underlay is supplied in rolls 1.250 m wide x 40 m long. The product is printed with the Fast Wrap logo repeated along the length of the roll. The rolls are wrapped in clear polythene film.

Accessories

4.3 Accessories used with Fast Wrap FlameSpec SS Roof Underlay which are supplied by the installer are:

- **Fixings** - stainless steel staples, clouts, screws or proprietary underlays fixings, or other temporary fixings to attach the roof underlay to the framing.

Handling and Storage

5.1 Handling and storage of the product, whether on or off site, is under the control of the installer. The rolls must be protected from damage and weather. They must be stored on end, under cover, in clean, dry conditions and must not be crushed.

Technical Literature

6.1 Refer to the Appraisals listing on the BRANZ website for details of the current Technical Literature for Fast Wrap FlameSpec SS Roof Underlay. The Technical Literature must be read in conjunction with this Appraisal. All aspects of design, use, installation and maintenance contained in the Technical Literature and within the scope of this Appraisal must be followed.

Design Information

General

7.1 Fast Wrap Flamespec SS Roof Underlay is suitable for use at roof pitches 3° and above. When used at pitches less than 10°, Fast Wrap Flamespec SS Roof Underlay can be installed horizontally or vertically when fully supported by a corrosion resistant roof underlay support. At pitches 10° and greater, Fast Wrap Flamespec SS Roof Underlay can be installed vertically or horizontally, spanning no greater than 1200 mm between supports.

7.2 Fast Wrap FlameSpec SS Roof Underlay is intended for use as an alternative to conventional kraft paper roof underlays, which are fixed over timber or steel framed roofs in order to limit the entry of wind into the roof cavity, and to assist in the moisture management of the roof cladding system.

7.3 The material also provides a degree of temporary weather protection during early construction. However, the product will not make the roof weathertight and some wetting of the underlying structure is always possible before the roof cladding is installed. Hence, the entire building must be closed-in and made weatherproof before moisture sensitive materials such as ceiling linings and insulation materials are installed.

7.4 Fast Wrap FlameSpec SS Roof Underlay must not be exposed to the weather or ultra violet light for a total of more than 7 days before being covered by the roof cladding.

7.5 Fast Wrap FlameSpec SS Roof Underlay is suitable for use under roof claddings on buildings as a roof underlay as called up in NZBC Acceptable Solution E2/AS1, Table 23. Refer to Table 1 for the material properties of the Fast Wrap FlameSpec SS Roof Underlay.

Readers are advised to check the validity of this Appraisal by referring to the Valid Appraisals listing on the BRANZ website, or by contacting BRANZ.

KDC - Approved Building Consent Document - BC210441 - Pg 72 of 512 - 30/08/2021 - ComplyNZ

Table 1: NZBC E2/AS1, Table 23 Requirements

NZBC E2/AS1, Table 23 Roof Underlays Properties	Property Performance Requirement	Results
Absorbency	≥ 150 g/m^2	Pass
Vapour Resistance	≤ 7 MN s/g	Pass
Water Resistance	≥ 100 mm	Pass
pH of Extract	≥ 5.5 and ≤ 8	Pass
Shrinkage	≤ 0.5%	Pass
Mechanical	Edge tear and tensile strength	**Edge tear (Average):** Machine direction = 229 N Cross direction = 145 N **Tensile strength (Average):** Machine direction = 4.47 kN/m Cross direction = 2.80 kN/m

Structure

8.1 Fast Wrap FlameSpec SS Roof Underlay is suitable for use in all Wind Zones of NZS 3604 up to, and including, Extra High.

Durability

9.1 Fast Wrap FlameSpec SS Roof Underlay meets code compliance with NZBC Clause B2.3.1 (a), not less than 50 years for roof underlays used where the roof cladding durability requirement or expected serviceable life is not less than 50 years, e.g. behind masonry roof tile cladding, and code compliance with NZBC Clause B2.3.1 (b), 15 years for roof underlays used where the roof cladding durability requirement is 15 years.

Serviceable Life

9.2 Provided it is not exposed to the weather or ultra-violet light for a total of more than 7 days, and provided the roof cladding is maintained in accordance with the cladding manufacturer's instructions and the roof cladding remains weather resistant, Fast Wrap FlameSpec SS Roof Underlay is expected to have a serviceable life equal to that of the roof cladding.

Control of Internal Fire and Smoke Spread

10.1 Fast Wrap FlameSpec SS Roof Underlay has an AS 1530 Part 2 flammability index of not greater than 5 and therefore meets the requirements of NZBC Acceptable Solutions C/AS2 to C/AS6, Paragraph 4.17.8 b), for the surface finish requirements of suspended flexible fabric used as an underlay to exterior cladding that is exposed to view in occupied spaces. It may therefore be used with no restrictions in all buildings.

Prevention of Fire Occurring

11.1 Separation or protection must be provided to Fast Wrap FlameSpec SS Roof Underlay from heat sources such as fire places, heating appliances, flues and chimneys. Part 7 of NZBC Acceptable Solutions C/AS1 – C/AS6 and NZBC Verification Method C/VM1 provide methods for separation and protection of combustible materials from heat sources.

External Moisture

12.1 Fast Wrap FlameSpec SS Roof Underlay must only be used under roof claddings that meet the requirements of the NZBC, such as those covered by NZBC Acceptable Solution E2/AS1, or roof claddings covered by a valid BRANZ Appraisal.

12.2 Fast Wrap FlameSpec SS Roof Underlay, when installed in accordance with the Technical Literature and this Appraisal, will assist in the total cladding system's compliance with NZBC Clause E2.

Readers are advised to check the validity of this Appraisal by referring to the Valid Appraisals listing on the BRANZ website, or by contacting BRANZ.

KDC - Approved Building Consent Document - BC210441 - Pg 73 of 512 - 30/08/2021 - ComplyNZ

Installation Information

Installation Skill Level Requirements

13.1 Installation must always be carried out in accordance with the Fast Wrap FlameSpec SS Roof Underlay Technical Literature and this Appraisal by, or under the supervision of, a Licensed Building Practitioner (LBP) with the relevant Licence Class.

Underlay Installation

14.1 Fast Wrap FlameSpec SS Roof Underlay must be fixed at maximum 300 mm centres to all framing members with large-head clouts 20 mm long, 6-8 mm stainless steel staples, self drilling screws or proprietary underlay fixings. The membrane must be pulled taut over the framing before fixing.

14.2 Fast Wrap FlameSpec SS Roof Underlay may be installed horizontally or vertically at roof pitches 3° and above (refer to Paragraph 7.1 for further guidance). It must extend from the ridge and overhang the fascia board by 20-25 mm. Vertical laps must be no less than 150 mm wide. Horizontal laps must also be no less than 150 mm, with the direction of the lap ensuring that water is shed to the outer face of the underlay. End laps must be made over framing and be no less than 150 mm wide.

14.3 When fixing the product in windy conditions, care must be taken due to the large sail area created.

14.4 Any damaged areas of Fast Wrap FlameSpec SS Roof Underlay, such as tears, holes or gaps around service penetrations, must be repaired. Damaged areas can be repaired by covering with new material lapping the damaged area by at least 150 mm and taping, or by taping small tears.

Inspections

14.5 The Technical Literature must be referred to during the inspection of Fast Wrap FlameSpec SS Roof Underlay installations.

Basis of Appraisal

The following is a summary of the technical investigations carried out:

Tests

15.1 The following tests have been carried out on Fast Wrap FlameSpec SS Roof Underlay in accordance with NZBC Acceptable Solution E2/AS1, Table 23: tensile strength, edge-tear resistance and resistance to water vapour transmission in accordance with AS/NZS 4200.1, shrinkage in accordance with AS/NZS 4201.3, resistance to water penetration in accordance with AS/NZS 4201.4, surface water absorbency in accordance with AS/NZS 4201.6 and pH of extract in accordance with AS/NZS 1301.421s. A range of these tests were completed before and after Fast Wrap FlameSpec SS Roof Underlay was exposed to ultra-violet light.

15.2 The Flammability Index of Fast Wrap FlameSpec SS Roof Underlay has been evaluated in accordance with AS 1530.2.

Other Investigations

16.1 A durability opinion has been given by BRANZ technical experts.

16.2 An evaluation of the expected performance of Fast Wrap FlameSpec SS Roof Underlay in direct contact with metal roof cladding has been completed by BRANZ.

16.3 The practicability of installation of Fast Wrap FlameSpec SS Roof Underlay has been assessed by BRANZ and found to be satisfactory.

16.4 The Technical Literature, including installation instructions, has been examined by BRANZ and found to be satisfactory.

Readers are advised to check the validity of this Appraisal by referring to the Valid Appraisals listing on the BRANZ website, or by contacting BRANZ.

KDC - Approved Building Consent Document - BC210441 - Pg 74 of 512 - 30/08/2021 - ComplyNZ

Quality

17.1 The manufacture of Fast Wrap has not been examined by BRANZ, but details of the methods adopted for quality control and the quality of the materials used, have been obtained and found to be satisfactory.

17.2 The quality of supply to the market is the responsibility of Paul Industries.

17.3 Building designers are responsible for the design of the building, and for the incorporation of the roof underlay into their design in accordance with the instructions of Paul Industries.

17.4 Quality of installation is the responsibility of the installer in accordance with the instructions of Paul Industries.

Sources of Information

- AS 1530.2: 1993 Test for Flammability of Materials.
- AS/NZS 1301.421s: 1998 Determination of the pH value of aqueous extracts of paper, board and pulp - cold extraction method.
- AS/NZS 4200.1: 1994 Pliable building membranes and Underlays - materials.
- AS/NZS 4201.3: 1994 Pliable building membranes and Underlays - Methods of test – Shrinkage.
- AS/NZS 4201.4: 1994 Pliable building membranes and Underlays - Methods of test – Resistance to water penetration.
- AS/NZS 4201.6: 1994 Pliable building membranes and Underlays - Methods of test – Surface water absorbency.
- AS/NZS 4534:2006 Zinc and zinc/aluminium-alloy coatings on steel wire.
- NZS 3604: 2011 Timber-framed Buildings.
- Acceptable Solutions and Verification Methods for New Zealand Building Code External Moisture Clause E2, Ministry of Business, Innovation and Employment, Third Edition July 2005 (Amendment 7, 01 January 2017).
- Ministry of Business, Innovation and Employment Record of amendments - Acceptable Solutions, Verification Methods and handbooks.
- The Building Regulations 1992.

Amendments

Amendment No. 1, dated 29 June 2018.

This Appraisal has been amended to update the requirements for support at roof pitches less than 10°.

Readers are advised to check the validity of this Appraisal by referring to the Valid Appraisals listing on the BRANZ website, or by contacting BRANZ.

KDC - Approved Building Consent Document - BC210441 - Pg 75 of 512 - 30/08/2021 - ComplyNZ

In the opinion of BRANZ, Fast Wrap FlameSpec SS Roof Underlay is fit for purpose and will comply with the Building Code to the extent specified in this Appraisal provided it is used, designed, installed and maintained as set out in this Appraisal.

The Appraisal is issued only to Judea Holdings Ltd, T/A Paul Industries, and is valid until further notice, subject to the Conditions of Appraisal.

Conditions of Appraisal

1. This Appraisal:
   a) relates only to the product as described herein;
   b) must be read, considered and used in full together with the Technical Literature;
   c) does not address any Legislation, Regulations, Codes or Standards, not specifically named herein;
   d) is copyright of BRANZ.
2. Judea Holdings Ltd, T/A Paul Industries:
   a) continues to have the product reviewed by BRANZ;
   b) shall notify BRANZ of any changes in product specification or quality assurance measures prior to the product being marketed;
   c) abides by the BRANZ Appraisals Services Terms and Conditions.
   d) Warrants that the product and the manufacturing process for the product are maintained at or above the standards, levels and quality assessed and found satisfactory by BRANZ pursuant to BRANZ's Appraisal of the product.
3. BRANZ makes no representation or warranty as to:
   a) the nature of individual examples of, batches of, or individual installations of the product, including methods and workmanship;
   b) the presence or absence of any patent or similar rights subsisting in the product or any other product;
   c) any guarantee or warranty offered by Judea Holdings Ltd, T/A Paul Industries.
4. Any reference in this Appraisal to any other publication shall be read as a reference to the version of the publication specified in this Appraisal.
5. BRANZ provides no certification, guarantee, indemnity or warranty, to Judea Holdings Ltd, T/A Paul Industries or any third party.

For BRANZ



Chelydra Percy
Chief Executive

Date of Issue:
24 August 2017

Readers are advised to check the validity of this Appraisal by referring to the Valid Appraisals listing on the BRANZ website, or by contacting BRANZ.

KDC - Approved Building Consent Document - BC210441 - Pg 76 of 512 - 30/08/2021 - ComplyNZ

BRANZ Appraised

Appraisal No. 853 [2019]

FASTWRAP ULTRA-BOND SILL TAPE



Appraisal No. 853 (2019)

This Appraisal replaces BRANZ Appraisal No. 853 (2014)

BRANZ Appraisals

Technical Assessments of products for building and construction.

Paul Industries
PO Box 308
Tauranga 3140
Free phone: 0800 330 320
Tel: 07 578 8209
Fax: 07 928 5244
Web: www.paulindustries.co.nz

BRANZ
1222 Moonshine Rd,
RD 1, Porirua 5381
Private Bag 50 908
Porirua 5240,
New Zealand
Tel: 04 237 1170
branz.co.nz

Product

1.1 Fastwrap ULTRA-BOND Sill Tape is a flexible flashing tape system for use around framed joinery openings as a secondary weather resistant barrier.

1.2 The system is installed into and around the framed joinery opening over the wall underlay and exposed frame to cover both the face and edge of the opening framing. Fastwrap ULTRA-BOND Sill Tape is also used at joinery heads to seal flashing upstands to the wall underlay.

Scope

2.1 Fastwrap ULTRA-BOND Sill Tape has been appraised as a flexible flashing system for use around window and door joinery openings for buildings within the following scope:

- constructed with timber framing in accordance with the scope limitations of NZBC Acceptable Solution E2/AS1, Paragraph 1.1; or,
- constructed with steel framing subject to specific engineering design with building height and floor plan area scope limitations in accordance with NZBC Acceptable Solution E2/AS1; and,
- with a risk score of 0-20, calculated in accordance with NZBC Acceptable Solution E2/AS1, Table 2; and,
- with wall cladding systems complying with NZBC Acceptable Solution E2/AS1 or a valid BRANZ Appraisal that specifies a flexible flashing system; and,
- with flexible wall underlays compatible with the flashing tape and complying with the NZBC; and,
- situated in NZS 3604 Wind Zones up to, and including, Extra High (refer to Paragraph 7.4).

Building Regulations

New Zealand Building Code (NZBC)

3.1 **In the opinion of BRANZ, Fastwrap ULTRA-BOND Sill Tape, if designed, used, installed and maintained in accordance with the statements and conditions of this Appraisal, will meet or contribute to meeting the following provisions of the NZBC:**

Clause B2 DURABILITY: Performance B2.3.1 (b), 15 years and B2.3.2. Fastwrap ULTRA-BOND Sill Tape meets these requirements. See Paragraphs 8.1 and 8.2.

Clause E2 EXTERNAL MOISTURE: Performance E2.3.2. Fastwrap ULTRA-BOND Sill Tape contributes to meeting this requirement. See Paragraphs 7.1 - 7.4 and 11.1.

Clause F2 HAZARDOUS BUILDING MATERIALS: Performance F2.3.1. Fastwrap ULTRA-BOND Sill Tape meets this requirement and will not present a health hazard to people.

Readers are advised to check the validity of this Appraisal by referring to the Valid Appraisals listing on the BRANZ website, or by contacting BRANZ.

KDC - Approved Building Consent Document - BC210441 - Pg 77 of 512 - 30/08/2021 - ComplyNZ

Technical Specification

4.1 System components and accessories supplied by Paul Industries are:

- **Fastwrap ULTRA-BOND Sill Tape** is a white spun bonded polyethylene film faced, butyl rubber self-adhesive tape with a release backing paper. The tape is supplied in rolls 200, 150, 75 and 50 mm wide x 25 m long. The rolls are wrapped in clear polythene film.

4.2 Accessories used with the system which are supplied by the building contractor are:

- **Flexible wall underlay** – building paper complying with NZBC Acceptable Solution E2/AS1, Table 23, or breather-type membranes covered by a valid BRANZ Appraisal for use as wall underlays.

Handling and Storage

5.1 Handling and storage of all materials supplied by Paul Industries, whether on or off site, is under the control of the installer. Fastwrap ULTRA-BOND Sill Tape must be protected from damage and weather. Rolls must be stored under cover, in clean, dry conditions away from direct exposure to sunlight.

Technical Literature

6.1 Refer to the Appraisals listing on the BRANZ website for details of the current Technical Literature for Fastwrap ULTRA-BOND Sill Tape. The Technical Literature must be read in conjunction with this Appraisal. All aspects of design, use, installation and maintenance contained in the Technical Literature and within the scope of this Appraisal must be followed.

Design Information

General

7.1 Fastwrap ULTRA-BOND Sill Tape has been assessed against the requirements of AC148: 2001 which is an alternative solution to the version of AC148 referenced by NZBC Acceptable Solution E2/AS1, Paragraph 9.1.5 (b). The installation method for Fastwrap ULTRA-BOND Sill Tape is an alternative solution to the installation method shown within NZBC Acceptable Solution E2/AS1, Figures 72A and 72B.

7.2 Fastwrap ULTRA-BOND Sill Tape must not be exposed to the weather or ultra-violet light for a total of more than 30 days before being covered by the cladding system.

7.3 The use of flexible flashing systems around window and door joinery openings is critical to assist the overall weathertightness performance of window and door joinery installations.

7.4 Fastwrap ULTRA-BOND Sill Tape is suitable for use over flexible wall underlays compatible with the flashing tape in NZS 3604 Wind Zones up to and including Extra High. In the Extra High Wind Zone, the flexible underlay must be installed over a rigid underlay complying with NZBC Acceptable Solution E2/AS1, Table 23.

7.5 Fastwrap ULTRA-BOND Sill Tape is designed to prevent air leakage and water penetration around window and door openings at framing junctions (e.g. at the sill trimmer and opening stud junction), and to keep any water that gets past the cladding, or through the joinery, from direct contact with the framing timber.

7.6 Fastwrap ULTRA-BOND Sill Tape is not designed to overcome poor detailing and workmanship of the window or door joinery installation. The system must not be considered in isolation, but be considered as part of the wall cladding system. Fastwrap ULTRA-BOND Sill Tape is designed to be used in conjunction with air seals and joinery flashing systems, not as a substitute.

7.7 When Fastwrap ULTRA-BOND Sill Tape is used in conjunction with LOSP (light organic solvent preservative) treated timber, the solvent from the timber treatment must be allowed to evaporate (generally at least one week) prior to the installation of the system.

Readers are advised to check the validity of this Appraisal by referring to the Valid Appraisals listing on the BRANZ website, or by contacting BRANZ.

KDC - Approved Building Consent Document - BC210441 - Pg 78 of 512 - 30/08/2021 - ComplyNZ

Durability

8.1 Assessment of durability to meet the NZBC is based on difficulty of access and replacement, and the ability to detect failure of Fastwrap ULTRA-BOND Sill Tape both during normal use and maintenance of the building.

Serviceable Life

8.2 Provided it is not exposed to the weather or ultra-violet light for a total of more than 30 days, and provided the exterior cladding is maintained in accordance with the cladding manufacturer's instructions and the cladding remains weather resistant, Fastwrap ULTRA-BOND Sill Tape is expected to have a serviceable life equal to that of the cladding.

Maintenance

9.1 No maintenance is required for Fastwrap ULTRA-BOND Sill Tape. Regular checks, at least annually, must be made of the junctions between the joinery and wall cladding to ensure that they are maintained weathertight and that the primary means of weather resistance for the junction e.g. flashing, sealant, etc continues to perform its function, to ensure that water will not penetrate the cladding.

Prevention of Fire Occurring

10.1 Separation or protection must be provided to the Fastwrap ULTRA-BOND Sill Tape from heat sources such as fireplaces, heating appliances and chimneys. Part 7 of NZBC Acceptable Solution C/AS1 and C/AS2, and NZBC Verification Method C/VM1 provide methods for separation and protection of combustible materials from heat sources.

External Moisture

11.1 Where a cladding manufacturer specifies the use of generic flashing tapes around window and door joinery openings at framing junctions as part of their system, or they specify the use of flexible flashing tapes that comply with NZBC E2/AS1, Paragraph 9.1.5 (b), Fastwrap ULTRA-BOND Sill Tape may be used.

Installation Information

Installation Skill Level Requirements

12.1 All design and building work must be carried out in accordance with the Fastwrap ULTRA-BOND Sill Tape Technical Literature and this Appraisal by competent and experienced tradespersons conversant with sill tape installations. Where the work involves Restricted Building Work (RBW) this must be completed by, or under the supervision of, a Licensed Building Practitioner (LBP) with the relevant License class.

General

13.1 The selected wall underlay must be installed in accordance with the manufacturer's instructions, and must completely cover the joinery opening. The underlay is then cut on a 45° angle away from each corner of the opening so the flaps can be folded into the opening and secured to the interior face of the timber framing.

13.2 Before the Fastwrap ULTRA-BOND Sill Tape is applied, the substrate surfaces must be clean, dry and free from any surface contaminants such as dust and grease that may cause loss of adhesion.

13.3 A 50 mm wide x 120 mm long sealing tape 'butterfly' must be installed at 45° across the corner of the sill/jamb junctions overlapping the corner by 3 mm to create a seal at the corner junction.

13.4 A length of Fastwrap ULTRA-BOND Sill Tape must be cut to the length of the sill plus 400 mm. The tape is installed flush with the interior face of the opening and is applied along the entire length of the sill and 200 mm up each jamb. The overhanging tape is cut at the corner of the opening to allow the tape to be folded onto the face of the building underlay. A spatula or similar must be used to ensure that adequate adhesion of the tape is achieved and that the tape is installed tight into the sill/jamb junction.

Readers are advised to check the validity of this Appraisal by referring to the Valid Appraisals listing on the BRANZ website, or by contacting BRANZ.

KDC - Approved Building Consent Document - BC210441 - Pg 79 of 512 - 30/08/2021 - ComplyNZ

13.5 A 400 mm length of Fastwrap ULTRA-BOND Sill Tape must be installed 200 mm down the jamb and 200 mm along the lintel at each of the top corners of the window or door joinery opening. A 50 mm wide x 120 mm long sealing tape 'butterfly' must be installed at 45° across the corner of the head/jamb junctions overlapping the corner by 3 mm.

13.6 Fastwrap ULTRA-BOND Sill Tape must not be stretched. To avoid wastage, the tape can be lapped 100 mm minimum onto itself without reducing the performance of the Fastwrap ULTRA-BOND Sill Tape System.

13.7 If the Fastwrap ULTRA-BOND Sill Tape is exposed to the weather or UV light for more than 30 days, then it must be replaced.

Installation Temperature

13.8 Fastwrap ULTRA-BOND Sill Tape must not be installed at temperatures less than 5°C. *(Note: Paul Industries approve the installation of Fastwrap ULTRA-BOND Sill Tape within the temperature range of -17°C to +45°C. This has not been addressed by the BRANZ and is therefore outside the scope of the Appraisal.)*

Inspections

13.9 The Technical Literature must be referred to during the inspection of Fastwrap ULTRA-BOND Sill Tape installations.

Basis of Appraisal

The following is a summary of the technical investigations carried out:

Tests

14.1 Testing of Fastwrap ULTRA-BOND Sill Tape has been completed by BRANZ to the requirements of ICC Evaluation Service Acceptance Criteria for Flashing Materials AC148:2001. The adhesion of Fastwrap ULTRA-BOND Sill Tape to black bituminous Kraft building paper complying with the requirements of NZBC Acceptable Solution E2/AS1, Table 23 and selected other synthetic wall underlays has been tested and found to be satisfactory.

Other Investigations

15.1 An assessment was made of the durability of Fastwrap ULTRA-BOND Sill Tape by BRANZ technical experts.

15.2 Site inspections were carried out by BRANZ to examine the practicability of installation.

15.3 The Technical Literature has been reviewed by BRANZ and found to be satisfactory.

Quality

16.1 The manufacture of Fastwrap ULTRA-BOND Sill Tape has not been examined by BRANZ, but details of the quality and composition of the materials used were obtained and found to be satisfactory. BRANZ undertakes an ongoing review of product quality on an inwards goods basis.

16.2 The quality of supply to the market is the responsibility of Paul Industries.

16.3 Designers are responsible for the building design, and building contractors are responsible for the quality of installation of framing systems and wall underlays in accordance with the instructions of the designer.

16.4 The quality of installation, handling and storage on site is the responsibility of the installer in accordance with the instructions of Paul Industries.

Readers are advised to check the validity of this Appraisal by referring to the Valid Appraisals listing on the BRANZ website, or by contacting BRANZ.

KDC - Approved Building Consent Document - BC210441 - Pg 80 of 512 - 30/08/2021 - ComplyNZ

Sources of Information

- ICC Evaluation Service, Inc, AC148 Acceptable Criteria for Flexible Flashing Materials, July 2001.
- NZS 3604: 2011 Timber-framed buildings.
- Ministry of Business, Innovation and Employment Record of amendments - Acceptable Solutions, Verification Methods and handbooks.
- The Building Regulations 1992.

Readers are advised to check the validity of this Appraisal by referring to the Valid Appraisals listing on the BRANZ website, or by contacting BRANZ.

KDC - Approved Building Consent Document - BC210441 - Pg 81 of 512 - 30/08/2021 - ComplyNZ

In the opinion of BRANZ, Fastwrap ULTRA-BOND Sill Tape is fit for purpose and will comply with the Building Code to the extent specified in this Appraisal provided it is used, designed, installed and maintained as set out in this Appraisal.

The Appraisal is issued only to Paul Industries, and is valid until further notice, subject to the Conditions of Appraisal.

Conditions of Appraisal

1. This Appraisal:
   a) relates only to the product as described herein;
   b) must be read, considered and used in full together with the Technical Literature;
   c) does not address any Legislation, Regulations, Codes or Standards, not specifically named herein;
   d) is copyright of BRANZ.
2. Paul Industries:
   a) continues to have the product reviewed by BRANZ;
   b) shall notify BRANZ of any changes in product specification or quality assurance measures prior to the product being marketed;
   c) abides by the BRANZ Appraisals Services Terms and Conditions;
   d) warrants that the product and the manufacturing process for the product are maintained at or above the standards, levels and quality assessed and found satisfactory by BRANZ pursuant to BRANZ's Appraisal of the product.
3. BRANZ makes no representation or warranty as to:
   a) the nature of individual examples of, batches of, or individual installations of the product, including methods and workmanship;
   b) the presence or absence of any patent or similar rights subsisting in the product or any other product;
   c) any guarantee or warranty offered by Paul Industries.
4. Any reference in this Appraisal to any other publication shall be read as a reference to the version of the publication specified in this Appraisal.
5. BRANZ provides no certification, guarantee, indemnity or warranty, to Paul Industries or any third party.

For BRANZ

Chelydra Percy
Chief Executive

Date of Issue:
18 November 2019

Readers are advised to check the validity of this Appraisal by referring to the Valid Appraisals listing on the BRANZ website, or by contacting BRANZ.

4161T Thermakraft Underlays, Foils, DPC, DPM, & Tapes

Thermakraft Ltd
+64 09 2733727
info@thermakraft.co.nz
www.thermakraft.co.nz

SUPPORTING DOCUMENTS

BRANZ Appraisal 329 - Supercourse 500™ Damp-Proof Course and Concealed Flashing

Ref 10565. Uploaded 12 Aug 2020

Purpose: Performance

KDC - Approved Building Consent Document - BC210441 - Pg 82 of 512 - 30/08/2021 - ComplyNZ

KDC - Approved Building Consent Document - BC210441 - Pg 83 of 512 - 30/08/2021 - ComplyNZ

BRANZ Appraised

Appraisal No. 329 [2016]

SUPERCOURSE 500 DAMP-PROOF COURSE AND CONCEALED FLASHING

Appraisal No. 329 (2016)

This Appraisal replaces BRANZ Appraisal No. 329 (2005)

Amended 23 February 2017





BRANZ Appraisals

Technical Assessments of products for building and construction.

Thermakraft Limited
PO Box 58 112
Greenmount
Auckland
Tel: 09 273 3727
Fax: 09 273 3726
Free phone: 0800 806 595
www.thermakraft.co.nz

BRANZ
1222 Moonshine Rd,
RD 1, Porirua 5381
Private Bag 50 908
Porirua 5240,
New Zealand
Tel: 04 237 1170
branz.co.nz

Product

1.1 Supercourse 500 is a single layer black polyethylene, embossed on both faces to produce a small diamond pattern. It is for use as a general damp-proof course (DPC), and also as a concealed flashing for masonry veneer cladding.

Scope

2.1 Supercourse 500 has been appraised for use as a damp-proof course for separating timber, wood-based products and metal from concrete, masonry or clay brick in accordance with NZS 3604.

2.2 Supercourse 500 has also been appraised for use as a damp-proof course and flashing in masonry veneer walls in accordance with NZBC Acceptable Solution E2/AS1.

Building Regulations

New Zealand Building Code (NZBC)

3.1 **In the opinion of BRANZ, Supercourse 500 Damp-Proof Course and Concealed Flashing, if used, designed, installed and maintained in accordance with the statements and conditions of this Appraisal, will meet, or contribute to meeting the following provisions of the NZBC:**

Clause B2 DURABILITY: Performance B2.3.1 (a), not less than 50 years and B2.3.2. Supercourse 500 meets these requirements. See Paragraph 8.1.

Clause E2 EXTERNAL MOISTURE: Performance E2.3.2 and E2.3.3. When used as a flashing as part of a masonry veneer cladding system, Supercourse 500 will contribute to meeting the requirements of E2.3.2. When used as a DPC, Supercourse 500 will meet the requirements of E2.3.3. See Paragraphs 11.1 and 11.2.

Clause F2 HAZARDOUS BUILDING MATERIALS: Performance F2.3.1. Supercourse 500 meets this requirement and will not present a health hazard to people.

3.2 This is an Appraisal of an **Alternative Solution** DPC in terms of the New Zealand Building Code compliance. This is also an Appraisal of an **Acceptable Solution** flashing when used behind masonry veneer in accordance with NZBC Acceptable Solution E2/AS1.

Readers are advised to check the validity of this Appraisal by referring to the Valid Appraisals listing on the BRANZ website, or by contacting BRANZ.

KDC - Approved Building Consent Document - BC210441 - Pg 84 of 512 - 30/08/2021 - ComplyNZ

Technical Specification

4.1 Supercourse 500 is 0.5 mm thick, extruded polyethylene film. It consists of a single layer of black polyethylene, embossed on both faces to produce a small diamond pattern. The total thickness of the product after embossing is 0.75 mm. Supercourse 500 is supplied in rolls 30 m long and is available in widths of 50, 75, 90, 100, 150, 200, 250, 300 and 1000 mm. Other widths are available upon request.

4.2 Each roll is labelled with the product name, dimensions, standards reference, and manufacturer's information.

Handling and Storage

5.1 Handling and storage of the product, whether on or off site, is under the control of the installer. The rolls must be protected from damage and weather and must be stored under cover, in clean, dry conditions.

Technical Literature

6.1 Refer to the Appraisals listings on the BRANZ website for details of the current Technical Literature for Supercourse 500. The Technical Literature must be read in conjunction with this Appraisal. All aspects of design, use, installation and maintenance contained in the Technical Literature and within the scope of this Certificate must be followed.

Design Information

General

7.1 Supercourse 500 exceeds the vapour resistance requirements of NZBC Acceptable Solution E2/AS1, Table 23 for DPC's and is a suitable moisture impermeable alternative to bituminous DPC's.

7.2 Supercourse 500 is intended for use as a DPC separating timber, wood-based products and metal from concrete or masonry elements, or where required, timber jack studs or bearers from concrete or timber piles, e.g. where required by NZS 3604, Paragraph 2.3.3 and Figure 6.3. When used as a DPC, the roll width selected must enable the Supercourse 500 to extend at least 6 mm beyond each face of the timber in accordance with the requirements of NZS 3604, Paragraph 2.3.3 (b).

7.3 Supercourse 500 is also intended for use as a flashing material with masonry veneer in accordance with NZBC Acceptable Solution E2/AS1, Paragraph 9.2.4 and also as a DPC in accordance with NZBC Acceptable Solution E2/AS1, Paragraph 9.2.5.

Timber Treatment

7.4 Supercourse 500 when used as a DPC or flashing, is suitable for use in contact with timber treated with light organic solvent preservative (LOSP) or water-based timber preservatives. The solvent from the timber treatment must be allowed to evaporate (generally at least one week) prior to the installation of Supercourse 500.

Exposure Zone Fixing Selection

7.5 Where Supercourse 500 is used as a flashing behind masonry veneer, fixings shall be hot dip galvanised clouts in Exposure Zones B and C and stainless steel clouts in Exposure Zone D.

Durability

Serviceable Life

8.1 Supercourse 500 is expected to have a serviceable life in excess of 50 years when it is installed in accordance with the requirements of this Appraisal and the Technical Literature, provided it is not exposed to the weather or ultra-violet (UV) light for a total of more than 30 days, and is never exposed to chemicals, or solvents that will degrade polyethylene.

Readers are advised to check the validity of this Appraisal by referring to the Valid Appraisals listing on the BRANZ website, or by contacting BRANZ.

KDC - Approved Building Consent Document - BC210441 - Pg 85 of 512 - 30/08/2021 - ComplyNZ

Control of Internal Fire and Smoke Spread

9.1 Damp-proof courses and flashings are exempt from the surface finish requirements of NZBC Acceptable Solutions C/AS1 – C/AS6 by NZBC Acceptable Solution C/AS1, Paragraph 4.2.2 e), and NZBC Acceptable Solutions C/AS2 – C/AS6, Paragraph 4.17.6 e).

Prevention of Fire Occurring

10.1 Separation or protection must be provided to Supercourse 500 from heat sources such as fire places, heating appliances, flues and chimneys. Part 7 of NZBC Acceptable Solutions C/AS1 – C/AS6 and NZBC Verification Method C/VM1 provide methods for separation and protection of combustible materials from heat sources.

External Moisture

11.1 Supercourse 500, when installed as a flashing in accordance with the Technical Literature and this Appraisal, will assist in the masonry veneer cladding system meeting the performance requirements of Clause E2.3.2.

11.2 Supercourse 500 when used as a DPC in accordance with this Appraisal, prevents walls, floors and structural elements in contact with the ground from absorbing or transmitting moisture in quantities that could cause undue dampness or damage to building elements to meet the performance requirements of Clause E2.3.3

Installation Information

Installation Skill Level Requirements

12.1 Installation must always be carried out in accordance with the Technical Literature and this Appraisal, by competent tradespersons with an understanding of DPC and flashing installation.

Supercourse 500 Installation

General

13.1 Strips of Supercourse 500 may be cut to length with a sharp knife.

DPC Installation

13.2 The surfaces to be separated must be smooth and flat, free from projections such as small stones or sharp ridges that may puncture the membrane when pressure is applied.

13.3 When used to separate timber and wood-based products from concrete or masonry, Supercourse 500 should be temporarily held in place with small hot-dip galvanised clouts or zinc plated staples. The strip of DPC must be wide enough to fully protect the width of the material in contact with the concrete or masonry. Refer also to Paragraph 7.2.

13.4 When used under timber plates fixed over concrete floor slabs and foundation walls, a small slit should be made in the material before pushing down over the bolts or fixings. Alternatively, a small hole can be formed by gently tapping the product resting on top of the bolt until a puncture is formed.

Flashing Installation

13.5 Supercourse 500 must be fixed in place to framing members at maximum 300 mm centres with small hot-dip galvanised clouts.

13.6 Horizontal and vertical joints must be no less than 75 mm wide, with the direction of the lap ensuring that water is shed to the outer face of the flashing.

13.7 At the sill/jamb junction, the jamb flashing must overlap the sill flashing.

Readers are advised to check the validity of this Appraisal by referring to the Valid Appraisals listing on the BRANZ website, or by contacting BRANZ.

KDC - Approved Building Consent Document - BC210441 - Pg 86 of 512 - 30/08/2021 - ComplyNZ

Basis of Appraisal

The following is a summary of the technical investigations carried out:

Tests

14.1 The following tests have been carried out on Supercourse 500 by Amdel Ltd, a NATA Certified laboratory: Water permeability, thickness, mass per unit area, pigment, impact resistance, and labelling, all in accordance with AS/NZS 2904 and AS/NZS 4347. The test results have been reviewed by BRANZ experts and found to be satisfactory.

Other Investigations

15.1 Durability and weathertightness opinions were given by BRANZ technical experts.

15.2 The practicability of installation has been assessed by BRANZ and found to be satisfactory.

15.3 The Technical Literature, including installation instructions, has been examined by BRANZ and found to be satisfactory.

Quality

16.1 The manufacture of Supercourse 500 has been examined by BRANZ, and details of the methods adopted for quality control and the quality of the materials used, have been obtained.

16.2 The quality management system of the Supercourse 500 manufacturer, Cromford Pty Ltd, has been assessed and registered as meeting the requirements of ISO 9001: 2008 by ApprovalMark International, Certificate Number QMS 27839.

16.3 The quality of supply to the market is the responsibility of Thermakraft Limited.

16.4 Building designers are responsible for the design of the building, and for the incorporation of Supercourse 500 into their design in accordance with the instructions of Thermakraft Limited.

16.5 Quality of installation is the responsibility of the installer in accordance with the instructions of Thermakraft Limited.

Sources of Information

- AS/NZS 2904: 1995 Damp-proof courses and flashings.
- AS/NZS 4347 Damp-proof courses and flashings - Methods of test.
- NZS 3604: 2011 Timber Framed Buildings.
- NZS 4229: 2013 Concrete masonry buildings not requiring specific engineering design.
- Acceptable Solutions and Verification Methods for New Zealand Building Code External Moisture Clause E2, Ministry of Business, Innovation and Employment, Third Edition July 2005 [Amendment 7, 01 January 2017].
- Ministry of Business, Innovation and Employment Record of Amendments for Compliance Documents and Handbooks.
- The Building Regulations 1992.

Amendments

Amendment No. 1, dated 23 February 2017.

This Appraisal has been amended to update the Appraisal Holder.

Readers are advised to check the validity of this Appraisal by referring to the Valid Appraisals listing on the BRANZ website, or by contacting BRANZ.

KDC - Approved Building Consent Document - BC210441 - Pg 87 of 512 - 30/08/2021 - ComplyNZ

In the opinion of BRANZ, Supercourse 500 Damp-Proof Course and Concealed Flashing is fit for purpose and will comply with the Building Code to the extent specified in this Appraisal provided it is used, designed, installed and maintained as set out in this Appraisal.

The Appraisal is issued only to Thermakraft Limited, and is valid until further notice, subject to the Conditions of Appraisal.

Conditions of Appraisal

1. This Appraisal:
   a) relates only to the product as described herein;
   b) must be read, considered and used in full together with the Technical Literature;
   c) does not address any Legislation, Regulations, Codes or Standards, not specifically named herein;
   d) is copyright of BRANZ.
2. Thermakraft Limited:
   a) continues to have the product reviewed by BRANZ;
   b) shall notify BRANZ of any changes in product specification or quality assurance measures prior to the product being marketed;
   c) abides by the BRANZ Appraisals Services Terms and Conditions.
   d) Warrants that the product and the manufacturing process for the product are maintained at or above the standards, levels and quality assessed and found satisfactory by BRANZ pursuant to BRANZ's Appraisal of the product.
3. BRANZ makes no representation or warranty as to:
   a) the nature of individual examples of, batches of, or individual installations of the product, including methods and workmanship;
   b) the presence or absence of any patent or similar rights subsisting in the product or any other product;
   c) any guarantee or warranty offered by Thermakraft Limited.
4. Any reference in this Appraisal to any other publication shall be read as a reference to the version of the publication specified in this Appraisal.
5. BRANZ provides no certification, guarantee, indemnity or warranty, to Thermakraft Limited or any third party.

For BRANZ

Chelydra Percy
Chief Executive

Date of Issue:
22 December 2016

Readers are advised to check the validity of this Appraisal by referring to the Valid Appraisals listing on the BRANZ website, or by contacting BRANZ.

4171E Ecoply Barrier Rigid Air Barrier System

Carter Holt Harvey Plywood
+64 0800 326759
info@ecoply.co.nz
www.chhply.co.nz

SUPPORTING DOCUMENTS

BRANZ Appraisal 827 - Ecoply® Barrier Rigid Air Barrier

Ref 10589. Uploaded 12 Aug 2020

Purpose: Performance, Installation, Maintenance, Warranty

KDC - Approved Building Consent Document - BC210441 - Pg 88 of 512 - 30/08/2021 - ComplyNZ

KDC - Approved Building Consent Document - BC210441 - Pg 89 of 512 - 30/08/2021 - ComplyNZ

BRANZ Appraised

Appraisal No. 827 [2019]

ECOPLY ® BARRIER RIGID AIR BARRIER

Appraisal No. 827 (2019)

This Appraisal Replaces BRANZ Appraisal No. 827(2014)



BRANZ Appraisals

Technical Assessments of products for building and construction.

CHH Plywood

Carter Holt Harvey Plywood Ltd
Private Bag 92-106
Auckland
Tel: 0800 326 759
Fax: 09 633 1582
Web: www.chhwoodproducts.co.nz

BRANZ

BRANZ
1222 Moonshine Rd,
RD 1, Porirua 5381
Private Bag 50 908
Porirua 5240,
New Zealand
Tel: 04 237 1170
branz.co.nz

WFTAO
WORLD FEDERATION OF TECHNICAL ASSESSMENT ORGANISATIONS

Product

1.1 The Ecoply® Barrier Rigid Air Barrier is sealed plywood sheets and tapes designed for use as a rigid wall underlay and air barrier (sheathing) behind cavity wall cladding systems. Ecoply® Barrier is also for use as a wall bracing system to resist wind and earthquake loads on timber framed buildings.

Scope

2.1 Ecoply® Barrier has been appraised for use as a rigid wall underlay, air barrier and temporary weather-protecting sheathing on timber framed buildings within the following scope:

- the scope limitations of NZBC Acceptable Solution E2/AS1, Paragraph 1.1; and,
- with absorbent and non-absorbent wall claddings installed over an 18 mm minimum drained and vented cavity; and,
- with masonry veneer in accordance with NZBC Acceptable Solution E2/AS1; and,
- situated in NZS 3604 Wind Zones up to, and including Extra High.

2.2 Ecoply® Barrier has also been appraised for use as wall bracing systems for timber framed buildings within the scope of NZS 3604.

Building Regulations

New Zealand Building Code (NZBC)

3.1 **In the opinion of BRANZ, Ecoply® Barrier, if used, designed, installed and maintained in accordance with the statements and conditions of this Appraisal, will meet, or contribute to meeting the following provisions of the NZBC:**

Clause B1 STRUCTURE: Performance B1.3.1, B1.3.2 and B1.3.4. Ecoply® Barrier meets the requirements for loads arising from earthquake and wind [i.e. B1.3.3 (f) and (h)]. See Paragraphs 8.1 - 8.4.

Clause B2 DURABILITY: Performance B2.3.1 (a), not less than 50 years, B2.3.1 (b), 15 years and B2.3.2. Ecoply® Barrier meets these requirements. See Paragraphs 9.1 - 9.3.

Clause E2 EXTERNAL MOISTURE: Performance E2.3.2. When used as part of the wall cladding system, Ecoply® Barrier will contribute to meeting this requirement. See Paragraphs 12.1 and 12.2.

Clause F2 HAZARDOUS BUILDING MATERIALS: Performance F2.3.1. Ecoply® Barrier meets this requirement and will not present a health hazard to people.

3.2 Ecoply® Barrier can be used to satisfy the bracing demand requirements of Section 5 of NZS 3604 which is an Acceptable Solution for compliance with NZBC Clause B1.

Readers are advised to check the validity of this Appraisal by referring to the Valid Appraisals listing on the BRANZ website, or by contacting BRANZ.

KDC - Approved Building Consent Document - BC210441 - Pg 90 of 512 - 30/08/2021 - ComplyNZ

Technical Specification

4.1 The components and accessories for Ecoply® Barrier, which are supplied by Carter Holt Harvey Woodproducts New Zealand are:

- **Ecoply® Barrier sheets** are 7 mm thick, 1197 mm wide and 2440 and 2745 mm long structural plywood, manufactured from radiata pine in accordance with AS/NZS 2269, and H3.2 CCA treated in accordance with AS/NZS 1604.3. The sheets are coated on the front face and four edges with a beige polyester powder coating. Plywood sheets are marked Ecoply® Barrier for identification.
- **Ecoply® Sealing Tape** - 60 mm x 30 m, tape for sheet joints.
- **Ecoply® Frame Flashing Tape** - 150 mm x 30 m and 200 mm x 30 m.
- **Ecoply® Sill Tape** - 150 mm x 20 m and 200 m x 20 m.

Tapes are marked Ecoply® and type for identification.

4.2 The components and accessories for the Ecoply® Barrier, which are supplied by the building contractor are:

- **Ecoply® Horizontal Jointer** - PVC horizontal 'Z' flashing supplied by E2 Flashing Solutions.
- **Fasteners** - 50 x 2.8 mm flat head hand-driven nails, hot-dip galvanised or stainless steel. Paslode Impulse 50 x 2.8 mm round head gun-nails. Hot-dip galvanised or stainless steel. Stainless steel nails must be ring shanked.

(Note: Hot-dip galvanising must comply with AS/NZS 4680 and stainless steel must be Grade 304 or 316.)

- **Bracing panel end stud connection** - GIB® HandiBrac® one-piece, 2 mm thick, galvanised-steel angle bracket approximately 95 mm high, 65 mm long and 54 mm wide. The bracket is supplied with 5 Type 17 screws 14 g x 35 mm.
- **Timber floor end stud hold down** - 12 mm x 150 mm hot-dipped galvanised coach screws.
- **Concrete floor end stud hold down** - cast-in bolts M12 x 150 mm minimum or proprietary fixings with a minimum characteristic strength of 15 kN.

Handling and Storage

5.1 Handling and storage of all materials supplied by Carter Holt Harvey Woodproducts New Zealand or the building contractor, whether on or off site, is under the control of the building contractor. Ecoply® Barrier plywood sheets must be stacked flat, off the ground and supported on a level platform. They must be kept dry at all times either by storing under cover or providing waterproof covers to the stack. Care must be taken to avoid damage to edges, ends and surfaces. The Ecoply® Tapes must be protected from damage and weather and stored in clean, dry conditions away from direct exposure to sunlight. uPVC jointers must be protected from physical damage and should be stored flat and under cover.

5.2 Other accessories must be stored so they are kept clean, dry and undamaged.

Technical Literature

6.1 Refer to the Appraisals listing on the BRANZ website for details of the current Ecoply® Barrier Specification & Installation Guide which must be read in conjunction with this Appraisal. All aspects of design, use, installation and maintenance contained in the Ecoply® Barrier Specification & Installation Guide and within the scope of this Appraisal must be followed.

Design Information

General

7.1 Ecoply® Barrier is intended for use as a rigid wall underlay and an air barrier fixed over timber framed walls in order to support wind pressures and to act as a secondary barrier to wind-driven rain. With all joints sealed with Ecoply® Tapes no flexible wall underlay is required over the Ecoply® Barrier plywood.

Readers are advised to check the validity of this Appraisal by referring to the Valid Appraisals listing on the BRANZ website, or by contacting BRANZ.

KDC - Approved Building Consent Document - BC210441 - Pg 91 of 512 - 30/08/2021 - ComplyNZ

7.2 Commencing from installation, the Ecoply® Barrier including the Ecoply® Tapes must not be exposed to the weather for more than 180 days.

7.3 Ecoply® Barrier may be used as a temporary weather protecting sheathing to allow the insulation and internal lining of the building to proceed before the wall cladding is installed. To achieve temporary weathertightness, all joints, internal and external corners of the Ecoply® Barrier must be sealed, the roof cladding and soffit linings must be installed, the flexible sill and jamb flashing tape system must be installed around the window and door openings, and the window and door joinery must be installed complete with head flashings and air seals. The timber wall framing must have a maximum moisture content as specified by the internal lining system supplier at the time of the insulation installation and internal lining application.

7.4 Ecoply® Barrier is suitable for use under wall claddings as a rigid wall underlay as called up in NZBC Acceptable Solution E2/AS1, Table 23 on timber framed buildings. Refer to Table 1.

Table 1: NZBC E2/AS1, Table 23 Requirements

NZBC E2/AS1 Table 23 Rigid Wall Underlay Properties	Property Performance Requirement	Ecoply® Barrier Actual Property Performance
Vapour Resistance	≤ 7 MN s/g	2.2 MN s/g
Absorbency	≥ 100 g/m^2	1451 g/m^2
Water Resistance	≥ 20 mm	Pass

Timber Treatment

7.5 Timber wall framing behind the Ecoply® Barrier must be treated as required by NZBC Acceptable Solution B2/AS1.

Timber Framing

7.6 Timber framing must be minimum 90 x 45 mm structural grade SG8 and must comply with NZS 3604 for buildings or parts of buildings within the scope limitations of NZS 3604. Buildings or parts of buildings outside the scope of NZS 3604 must be to a specific design in accordance with NZS 3603 and AS/NZS 1170 considering local factors. In all cases studs must be at maximum 600 mm centres. Dwangs must be fitted flush between the studs at maximum 1200 mm centres. *(Note: The timber framing must also be suitable for the selected wall cladding. Refer to the selected cladding system's Technical Literature for specific framing requirements.)*

7.7 Timber wall framing where the Ecoply® Barrier plywood sheets are joined must be nominal 50 mm width (i.e. 45 mm minimum finished width).

7.8 Timber framing must be kiln dried and as dry as practically possible at the time of the Ecoply® Barrier installation.

Ecoply® Barrier Set Out

7.9 All Ecoply® Barrier plywood sheet edges must be fully supported by framing.

7.10 Ecoply® Barrier must be installed vertically. At the base of the wall the plywood sheets must hang below the bottom plate a minimum of 25 mm, up to a maximum of 40 mm.

Ecoply® Barrier Plywood and Cladding Fixing

7.11 Ecoply® Barrier plywood sheets must be fixed at maximum 150 mm centres around the perimeter of each sheet and at maximum 300 mm centres to intermediate studs. In Extra High Wind Zones, the fixing centres on the intermediate studs must be closed up to maximum 150 mm centres. The fixings are at the same centres regardless of whether the Ecoply® Barrier plywood is being used for bracing or not.

7.12 The length of the selected wall cladding fasteners must be increased by a minimum of 7 mm to maintain the face load strength of the wall cladding system.

Readers are advised to check the validity of this Appraisal by referring to the Valid Appraisals listing on the BRANZ website, or by contacting BRANZ.

KDC - Approved Building Consent Document - BC210441 - Pg 92 of 512 - 30/08/2021 - ComplyNZ

Structure

Mass

8.1 The mass of Ecoply® Barrier is approximately 4.0 kg/m^2. This mass must be added to the selected wall cladding system mass when determining the overall wall cladding mass in terms of NZS 3604.

Wind Zones

8.2 Ecoply® Barrier is suitable for use in all Wind Zones of NZS 3604, up to, and including, Extra High.

Bracing

8.3 The bracing units achieved (wind and earthquake) for the Ecoply® Barrier are given in Table 2. The Technical Literature gives details of edge and end fixing distances and provides comprehensive construction and panel hold-down details.

8.4 The bracing units are derived from the BRANZ P21 test method based on a wall height of 2.4 m. For greater wall heights the bracing rating is calculated by multiplying the appropriate value shown in Table 2 by 2.4 divided by the wall height in metres. Walls lower than 2.4 m shall be rated as if they were 2.4 m in high.

Table 2: Bracing Ratings for Ecoply® Barrier Structural Plywood Brace

Specification No.	Minimum Wall Length	Lining Requirements	Bottom Plate Hold-down and Fixing	BUs/m Wind	BUs/m Earthquake
EPBI	0.4 m	Ecoply® Barrier one side	GIB HandiBrac®*	80	95
	0.6 m			95	105
	1.2 m			120	135**
EP2	0.6 m	Ecoply® Barrier or Ecoply® each side	GIB Handibrac®	105	115
EPBS	0.4 m	Ecoply® Barrier one side	No additional fastening*	60	60
	0.6 m			60	65
	1.2 m			65	70
	2.4 m			80	90
EPBG	0.4 m	Ecoply® Barrier one side and 10 mm GIB® Standard plasterboard other side	GIB HandiBrac®	100	115
	1.2 m			150**	150**

Notes:

** Bottom plate fixed in accordance with the requirements of NZS 3604.*

*** Timber Floors - A limit of 120 BU/m applies to NZS 3604 timber floors.*

Penetrations for Services

8.5 Small openings for services of up to 90 x 90 mm may be placed no closer than 90 mm to the edge of the bracing element and service penetrations up to a maximum of 150 mm diameter may be placed no closer than 150 mm from the sheet edge, without affecting the bracing rating of the panel.

Connections

8.6 The Ecoply® Barrier Technical Literature contains a top plate hold down detail and a lintel tie down connection detail that are alternatives to the details given in NZS 3604.

Readers are advised to check the validity of this Appraisal by referring to the Valid Appraisals listing on the BRANZ website, or by contacting BRANZ.

KDC - Approved Building Consent Document - BC210441 - Pg 93 of 512 - 30/08/2021 - ComplyNZ

Durability

9.1 Ecoply® Barrier meets code compliance with NZBC Clause B2.3.1 (a), not less than 50 years when used where the cladding durability requirement or expected serviceable life is not less than 50 years, e.g. behind masonry veneer, or where it is used as a bracing element, and code compliance with NZBC Clause B2.3.1 (b), 15 years where the cladding durability requirement is 15 years and the Ecoply® Barrier is not used as a bracing element.

Serviceable Life

9.2 Provided Ecoply® Barrier is not exposed to the weather or ultra-violet light for a total of more than 180 days, and provided the exterior cladding is maintained in accordance with the cladding manufacturer's instructions and the cladding remains weather resistant, the Ecoply® Barrier is expected to have a serviceable life of at least 50 years.

9.3 Areas of geothermal activity and coastal locations can be very corrosive to fasteners, especially coastal locations within distances of up to 500 metres of the sea including harbours, or 100 metres from tidal estuaries and sheltered inlets in some instances. These coastal locations are defined in NZS 3604 as Zone D and stainless steel fasteners must be used. For installation in NZS 3604 Corrosion Zones C and B hot-dip galvanised steel fasteners complying with the requirements of NZS 3604 may be used.

Maintenance

10.1 Ecoply® Barrier will not normally require maintenance. However, if damage occurs to the cladding or lining protecting the sheathing or to the sheathing itself, then repairs or replacement must be carried out to ensure the integrity of the rigid air barrier.

Prevention of Fire Occurring

11.1 Separation or protection must be provided to the Ecoply® Barrier and associated combustible materials from heat sources such as fire places, heating appliances, flues and chimneys. Part 7 of NZBC Acceptable Solutions C/AS1 - C/AS6 and NZBC Verification Method C/VM1 provide methods for separation and protection of combustible materials from heat sources.

External Moisture

12.1 Ecoply® Barrier must be used behind claddings that meet the performance requirements of NZBC Clause E2.

12.2 Ecoply® Barrier, when installed in accordance with the Ecoply® Barrier Specification & Installation Guide and this Appraisal, will assist in the total cladding system's compliance with NZBC Clause E2.

Installation Information

Installation Skill Level Requirements

13.1 Installation must always be carried out in accordance with the Ecoply® Barrier Technical Literature and this Appraisal by, or under the supervision of, a Licensed Building Practitioner (LBP) with the relevant Licence Class.

System Installation

Ecoply® Barrier Installation

14.1 Ecoply® Barrier plywood sheets may be cut using any circular saw or hand saw tool. Holes and cut-outs may be formed by using a hole saw.

14.2 Sheets must be dry prior to installation. Cut edges that are left exposed must be sealed in accordance with the Ecoply® Barrier Specification & Installation Guide prior to installation.

14.3 Prior to fixing Ecoply® Barrier plywood sheets, a check must be made to ensure all sheet edges will be supported by framing. At the base of the wall, the sheet must hang below the bottom plate by a minimum of 25 mm.

Readers are advised to check the validity of this Appraisal by referring to the Valid Appraisals listing on the BRANZ website, or by contacting BRANZ.

KDC - Approved Building Consent Document - BC210441 - Pg 94 of 512 - 30/08/2021 - ComplyNZ

14.4 Ecoply® Barrier plywood sheets must be fixed to the timber framing with 50 x 2.8 mm hot dipped galvanised flat head clouts or 50 x 2.8 mm ring shanked stainless steel nails. Nails may be either hand driven or power driven. Refer to Paragraph 7.11 for fixing centres and Paragraph 9.3 for material selection.

14.5 At vertical joints Ecoply® Barrier must be installed with a 1.5-3.0 mm gap between the sheet edges. Sheets at horizontal joints between floor levels must be installed with a minimum 15 mm gap between the edges and must be supported over horizontal framing. All horizontal joints must be flashed with the Ecoply® Horizontal Jointer.

14.6 Any damaged areas of Ecoply® Barrier, or gaps around service penetrations, must be repaired by covering with joint sealing tape.

Joint Sealing Tape Installation

14.7 Ecoply® Barrier plywood sheets must be cleaned of dust and other surface contaminants prior the application of the joint sealing tape to ensure adequate adhesion is achieved.

14.8 All vertical sheet joints, internal and external corners, penetrations or damaged areas and over driven nails must be covered with Ecoply® Sealing Tape. The manufacturer's instructions regarding the application temperatures for the joint sealing tapes must be followed.

Flexible Sill and Jamb Tape Installation

14.9 The Ecoply® Sill Tape and Ecoply® Frame Flashing Tape must be installed in accordance with the Ecoply® Barrier Specification & Installation Guide. Particular attention must be paid to the installation of the sill and jamb tapes around window and door joinery openings to ensure all exposed timber wall framing in the opening is protected.

Inspections

14.10 The Ecoply® Barrier Specification & Installation Guide must be referred to during the inspection of the Ecoply® Barrier installations.

Health and Safety

15.1 Ecoply® Barrier must be handled in accordance with the Material Safety Data Sheet for H3.2 CCA treated Ecoply®.

15.2 When power tools are used for cutting or forming holes, health and safety measures as set out in the Ecoply® Barrier Specification & Installation Guide must be undertaken because of the amount of dust generated.

15.3 Safe use and handling procedures for the Ecoply® Barrier and the components that make up the cladding system are provided in the relevant manufacturers' Installation Guides.

Basis of Appraisal

The following is a summary of the technical investigations carried out:

Tests

16.1 Racking tests were carried out in accordance with BRANZ Technical Paper P21. The earthquake and wind bracing ratings were determined using the evaluation procedures outlined in BRANZ Technical Recommendation No. 10. The test results and laboratory methods have been reviewed by BRANZ and found to be satisfactory.

16.2 Testing has been carried out by BRANZ to determine the face load pressure resistance of Ecoply® Barrier.

16.3 Testing to determine the resistance of Ecoply® Barrier plywood to water vapour transmission in accordance with AS/NZS 4200.1 and resistance to water penetration in accordance with AS/NZS 4201.4 has been completed. The results have been reviewed by BRANZ and found to be satisfactory.

Readers are advised to check the validity of this Appraisal by referring to the Valid Appraisals listing on the BRANZ website, or by contacting BRANZ.

KDC - Approved Building Consent Document - BC210441 - Pg 95 of 512 - 30/08/2021 - ComplyNZ

16.4 The Ecoply® Sealing Tape, Frame Flashing Tape and Sill Tape have been tested to BRANZ criteria to assess the tensile strength of control and UV aged material, nail sealability, water resistance of control and UV accelerated aged material and pliability. BRANZ has determined that the tapes are fit for purpose for the intended use. The adhesion to the Ecoply® Barrier plywood sheet has also been tested and found to be satisfactory.

Other Investigations

17.1 Structural and durability opinions were given by BRANZ technical experts.

17.2 An assessment was made of the durability of the Ecoply® Barrier Tapes by BRANZ technical experts.

17.3 BRANZ expert opinion on NZBC E2 code compliance for Ecoply® Barrier was based on evaluation of all details within the scope and as stated within this Appraisal. The details contained within the Ecoply® Barrier Specification & Installation Guide have been reviewed and an opinion has been given by BRANZ technical experts that the system will meet the performance levels of Acceptable Solution E2/AS1 for a rigid wall underlay.

17.4 Site inspections were carried out by BRANZ to assess the practicability of installation.

17.5 The Ecoply® Barrier Specification & Installation Guide has been examined by BRANZ and found to be satisfactory.

Quality

18.1 The manufacture of the Ecoply® Barrier plywood has been examined by BRANZ, including methods adopted for quality control. Details regarding the composition of the materials used were obtained by BRANZ and found to be satisfactory.

18.2 The quality of materials, components and accessories supplied by Carter Holt Harvey Woodproducts New Zealand is the responsibility of Carter Holt Harvey Woodproducts New Zealand. The quality control system for the manufacture of the plywood used for the Ecoply® Barrier has been assessed and registered as meeting the requirements of AS/NZS 2269 by the Engineered Wood Products Association of Australasia, Certificate No. 911.

18.3 The manufacture of Ecoply® Tapes has been examined on behalf of BRANZ, including methods adopted for quality control. Details of the quality and composition of the materials used were obtained and found to be satisfactory.

18.4 Quality of installation on site of components and accessories supplied by Carter Holt Harvey Woodproducts New Zealand and the building contractor is the responsibility of the installer.

18.5 Designers are responsible for the building design, and building contractors are responsible for the quality of installation in accordance with the instructions of Carter Holt Harvey Woodproducts New Zealand.

Sources of Information

- AS/NZS 1170: 2002 Structural design action - General principles.
- AS/NZS 2269: 2012 Plywood - Structural.
- AS/NZS 4200.1: 2017 Pliable building membranes and underlays - materials.
- AS/NZS 4201.4: 1994 Pliable building membranes and underlays - Methods of test - Resistance to water penetration.
- NZS 3602: 2003 Timber and wood-based products for use in building.
- NZS 3603: 1993 Timber Structures Standard.
- NZS 3604: 2011 Timber-framed buildings.
- Acceptable Solutions and Verification Methods for New Zealand Building Code External Moisture Clause E2, Ministry of Business, Innovation and Employment, Third Edition July 2005 (Amendment 8, 30 November 2018).
- Ministry of Business, Innovation and Employment Record of amendments - Acceptable Solutions, Verification Methods and handbooks.
- The Building Regulations 1992.

Readers are advised to check the validity of this Appraisal by referring to the Valid Appraisals listing on the BRANZ website, or by contacting BRANZ.

KDC - Approved Building Consent Document - BC210441 - Pg 96 of 512 - 30/08/2021 - ComplyNZ

In the opinion of BRANZ, Ecoply® Barrier Rigid Air Barrier is fit for purpose and will comply with the Building Code to the extent specified in this Appraisal provided it is used, designed, installed and maintained as set out in this Appraisal.

The Appraisal is issued only to Carter Holt Harvey Plywood, and is valid until further notice, subject to the Conditions of Appraisal.

Conditions of Appraisal

1. This Appraisal:
   a) relates only to the product as described herein;
   b) must be read, considered and used in full together with the Technical Literature;
   c) does not address any Legislation, Regulations, Codes or Standards, not specifically named herein;
   d) is copyright of BRANZ.
2. Carter Holt Harvey Plywood:
   a) continues to have the product reviewed by BRANZ;
   b) shall notify BRANZ of any changes in product specification or quality assurance measures prior to the product being marketed;
   c) abides by the BRANZ Appraisals Services Terms and Conditions;
   d) warrants that the product and the manufacturing process for the product are maintained at or above the standards, levels and quality assessed and found satisfactory by BRANZ pursuant to BRANZ's Appraisal of the product.
3. BRANZ makes no representation or warranty as to:
   a) the nature of individual examples of, batches of, or individual installations of the product, including methods and workmanship;
   b) the presence or absence of any patent or similar rights subsisting in the product or any other product;
   c) any guarantee or warranty offered by Carter Holt Harvey Plywood.
4. Any reference in this Appraisal to any other publication shall be read as a reference to the version of the publication specified in this Appraisal.
5. BRANZ provides no certification, guarantee, indemnity or warranty, to Carter Holt Harvey Plywood or any third party.

For BRANZ

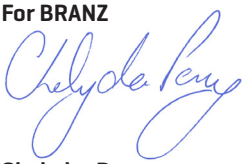

Chelydra Percy
Chief Executive

Date of Issue:
21 June 2019

Readers are advised to check the validity of this Appraisal by referring to the Valid Appraisals listing on the BRANZ website, or by contacting BRANZ.

4282C Specialized EZpanel AAC Panel Cladding System

Specialized Construction Products Ltd
+64 09 4144499
scot@specialized.co.nz
www.specialized.co.nz

SUPPORTING DOCUMENTS

EZpanel Cavity System Branz Appraisal No. 649

Ref 27741. Uploaded 22 Jun 2021

Purpose: Performance, Installation

EZPanel Installation Guide

Ref 27742. Uploaded 22 Jun 2021

Purpose: Installation

EZPanel Specification

Ref 27743. Uploaded 22 Jun 2021

Purpose: Performance, Installation, Maintenance, Warranty

Specialized Construction Products Ltd EZpanel AAC Panel Cladding System 101753

Ref 10272. Uploaded 26 Jun 2020

Purpose: Performance, Installation, Maintenance, Environmental

KDC - Approved Building Consent Document - BC210441 - Pg 97 of 512 - 30/08/2021 - ComplyNZ

KDC - Approved Building Consent Document - BC210441 - Pg 98 of 512 - 30/08/2021 - ComplyNZ

BRANZ Appraised

Appraisal No. 649 [2020]

EZPANEL CAVITY SYSTEM



Appraisal No. 649 (2020)

This Appraisal replaces BRANZ Appraisal No. 649 [2009]

BRANZ Appraisals

Technical Assessments of products for building and construction.

Specialized Construction Products Ltd
PO Box 101 127
North Shore Mail Centre
Auckland
Tel: 0800 0800 79
Email: info@specialized.co.nz
Web: www.specialized.co.nz

BRANZ
1222 Moonshine Rd,
RD1, Porirua 5381
Private Bag 50 908
Porirua 5240,
New Zealand
Tel: 04 237 1170
branz.co.nz

Product

1.1 The EZpanel Cavity System is a cavity-based external wall cladding system for residential and light commercial type buildings where domestic construction techniques are used. The system consists of autoclaved aerated concrete (AAC) panels (EZpanels) fixed over polystyrene battens to form a 20 or 40 mm cavity, or timber batten blocks to form a 40 mm cavity.

1.2 The EZpanel Cavity System is finished with either a cement-based option or an acrylic-based option. The cement-based option consists of a base coat of MLC plaster followed by either a cement-based finishing plaster or an acrylic-based finishing plaster. The acrylic-based option consists of a flanking coat of MLC plaster followed by a mesh coat of Powaflex acrylic plaster and an acrylic-based finishing plaster. Both base coat options are finished with an acrylic exterior paint system.

1.3 The system incorporates a primary and secondary means of weather resistance (first and second line of defence) against water penetration by separating the cladding from the external wall framing with a nominal 20 mm or 40 mm drained cavity.

Scope

2.1 The EZpanel Cavity System has been appraised as an external wall cladding system for buildings within the following scope:

- the scope limitations of NZBC Acceptable Solution E2/AS1, Paragraph 1.1; and,
- with a risk score of 0-20, calculated in accordance with NZBC Acceptable Solution E2/ AS1, Table 2; and,
- situated in NZS 3604 Wind Zones up to, and including Extra High.

2.2 The EZpanel Cavity System has also been appraised for weathertightness and structural wind loading when used as an external wall cladding system for buildings within the following scope:

- the scope limitations of NZBC Acceptable Solution E2/AS1, Paragraph 1.1; and,
- constructed with timber and steel framing subject to specific engineering design; and,
- situated in specific design wind pressures up to a maximum design differential ultimate limit state (ULS) of 2.5 kPa.

2.3 The EZpanel Cavity System must only be installed on vertical surfaces *(except for tops of parapets, sills and balustrades, which must have a minimum 10° slope and be waterproofed in accordance with the Technical Literature).*

2.4 The system is appraised for use with aluminium window and door joinery that is installed with vertical jambs and horizontal heads and sills. *(The Appraisal of the EZpanel Cavity System relies on the joinery meeting the requirements of NZS 4211 for the relevant Wind Zone or wind pressure.)*

2.5 Installation of components and accessories supplied by Specialized Construction Products Ltd, its certified distributors and approved applicators must be carried out only by Specialized Construction Products Ltd approved applicators.

Readers are advised to check the validity of this Appraisal by referring to the Valid Appraisals listing on the BRANZ website, or by contacting BRANZ.

KDC - Approved Building Consent Document - BC210441 - Pg 99 of 512 - 30/08/2021 - ComplyNZ

Building Regulations

New Zealand Building Code (NZBC)

3.1 **In the opinion of BRANZ, the EZpanel Cavity System if designed, used, installed and maintained in accordance with the statements and conditions of this Appraisal, will meet the following provisions of the NZBC:**

Clause B1 STRUCTURE: Performance B1.3.1, B1.3.2 and B1.3.4. The EZpanel Cavity System meets the requirements for loads arising from self-weight, earthquake, wind, impact and creep [i.e. B1.3.3 (a), (f), (h), (j) and (q)]. See Paragraphs 10.1 - 10.5.

Clause B2 DURABILITY: Performance B2.3.1 (b), 15 years, B2.3.1 (c), 5 years, and B2.3.2. The EZpanel Cavity System meets these requirements. See Paragraphs 11.1 - 11.3.

Clause E2 EXTERNAL MOISTURE: Performance E2.3.2. The EZpanel Cavity System meets this requirement. See Paragraphs 17.1 - 17.5.

Clause F2 HAZARDOUS BUILDING MATERIALS: Performance F2.3.1. The EZpanel Cavity System meets this requirement and will not present a health hazard to people.

Technical Specification

4.1 System components and accessories supplied by Specialized Construction Products Ltd are as follows:

EZpanel

- EZpanel panels are 50 mm thick, manufactured from AAC with an approximate density of 690 kg/m^3. EZpanel panels are supplied in lengths of 2.2 m long x 600 mm wide.

Cavity Battens

- Cavity battens are manufactured from ultra high density (Class UHD) EPS with a density of no less than 28 kg/m^3. The battens are 50 mm wide by 21 mm thick or 50 mm wide by 41 mm thick and are supplied in 1200 mm lengths.

Cavity Batten Blocks

- Cavity batten blocks are 200 mm long x 40 mm thick x 40 mm wide timber treated to Hazard Class H3.2 CCA. The blocks are cut with a 15° slope on the top edge.

Base Coat Plasters

- **EZpanel Base Coat** is a polymer modified, Portland cement-based plaster supplied in 20 kg bags and is mixed on site with clean water. It is applied as the base coat around window and door joinery penetrations in a minimum 2-3 mm layer followed by the embedment of fibreglass mesh reinforcement in the outer surface.
- **Powaflex** is a fibre-reinforced acrylic plaster supplied in 20 kg bags that is mixed on site with clean water. It is applied in a minimum 2-3 mm layer followed by the embedment of fibreglass mesh reinforcement in the outer surface.

Finishing Plasters

- **Fine Mesh Coat** is a polymer modified, Portland cement-based plaster supplied in 20 kg bags and is mixed on site with clean water. It is used to achieve a heavy stucco texture finish when sprayed through a hopper gun or a sagola gun.
- **Spanish Finish** is a polymer modified, Portland cement-based finishing plaster supplied in 20 kg bags and is mixed on site with clean water. It is trowel applied in various thicknesses over the mesh coat to achieve an undulating style finish.
- **Float Finish** is a polymer modified, Portland cement-based finishing plaster supplied in 20 kg bags and is mixed on site with clean water. It is trowel applied in two coats (1-2 mm per layer) over the mesh coat and is polished flat to achieve a fine granular finish.
- **Coarse Texture** is a coarse mesh coat. A polymer-modified, cement-based plaster which can be sprayed through a sagola gun to achieve a finely spiked texture finish.

Readers are advised to check the validity of this Appraisal by referring to the Valid Appraisals listing on the BRANZ website, or by contacting BRANZ.

KDC - Approved Building Consent Document - BC210441 - Pg 100 of 512 - 30/08/2021 - ComplyNZ

- **Granopor Fine 1.0 mm Acrylic Texture** is a ready to use, synthetic resin-based render which is polished flat to achieve a fine granular finish. It is supplied in 30 kg pails.
- **Granopor Top 1.5 mm Acrylic Texture** is a ready to use, synthetic resin-based render which is polished flat to achieve a fine granular finish or spray applied to achieve a fine stippled appearance. It is supplied in 30 kg pails.

Accessories

- **Reinforcing mesh** - alkali-resistant fibreglass mesh with a nominal mesh size of 4 mm square and a weight of 150 g/m^2 for use in domestic and light commercial situations.
- **uPVC components** - base bead, EZpanel sill/jamb flashing, head flashing, edge bead, high backed U-Channel, flat 70 mm U-Channel, 20 x 20 L-Bead, 50 x 20 L-Bead, 8 mm control joint and corner socket.
- **EZpanel fixings (timber frame with EPS battens)** - 100 mm long (for 20 mm cavity) and 120 mm long (for 40 mm cavity) AS 3566 Corrosion Class 4 wood screws with a head diameter of 14 mm and a shank diameter of 5.1 mm in NZS 3604 defined Exposure Zones B and C and Grade 304 Stainless Steel in Exposure Zone D.
- **EZpanel fixings (timber frame with cavity batten blocks)** - 75 mm long AS 3566 Corrosion Class 4 wood screws with a head diameter of 14 mm and a shank diameter of 5.3 mm in NZS 3604 defined Exposure Zones B and C and Grade 304 Stainless Steel in Exposure Zone D.
- **EZpanel fixings (steel frame with EPS battens)** - 100 mm long (for 20 mm cavity) and 120 mm long (for 40 mm cavity) AS 3566 Corrosion Class 4 self-drilling screws with a head diameter of 14 mm and a shank diameter of 5.1 mm in NZS 3604 defined Exposure Zones B and C and Grade 304 Stainless Steel in Exposure Zone D. Refer to Paragraph 7.8 for foundation support requirements.
- **EZpanel Adhesive** - AAC compatible adhesive for temporarily bonding EZpanel panel joints during construction and for adhering uPVC components to the EZpanel panels as and where required.

Plastershield

- Plastershield is a 100% acrylic-based exterior paint formulated for use over Specialized Construction Products Ltd cement-based and acrylic-based finishing plasters. It is supplied in 10 litre and 20 litre pails.

4.2 Accessories used with the system which are supplied by the Specialized Construction Products Ltd approved applicators are:

- **Cavity batten fixings** - 30 x 2.5 mm hot-dip galvanised steel flat head nails for timber frame, or construction adhesive for temporary fixing to building underlay over timber or steel frame.
- **Cavity batten block fixings** - 75 x 3.15 mm hot-dip galvanised ring shank flat head nails. *(Note: the hot-dip galvanising must comply with AS 3566.2.)*
- **Waterproof membrane tapes** - tapes covered by a valid BRANZ Appraisal for use as waterproof membranes over the tops of plastered parapets, balustrades, fixing blocks and the like.
- **Flexible sealant** - sealant complying with NZBC Acceptable Solution E2/AS1, or sealant covered by a valid BRANZ Appraisal for use as a weather sealing sealant for exterior use.

4.3 Accessories used with the system which are supplied by the building contractor are:

- **Flexible wall underlay** - building paper complying with NZBC Acceptable Solution E2/AS1 Table 23, or breather-type membranes covered by a valid BRANZ Appraisal for use as wall underlays.
- **Flexible building underlay support** - polypropylene strap, 75 mm galvanised mesh, galvanised wire, or additional vertical battens for securing the flexible building underlay in place and preventing bulging of the bulk insulation into the drainage cavity. *(Note: mesh and wire galvanising must comply with AS/NZS 4534.)*
- **Rigid wall underlay** - Plywood or fibre cement sheet complying with NZBC Acceptable Solution E2/AS1 Table 23, or rigid sheathing covered by a valid BRANZ Appraisal for use as rigid air barrier systems.

Readers are advised to check the validity of this Appraisal by referring to the Valid Appraisals listing on the BRANZ website, or by contacting BRANZ.

KDC - Approved Building Consent Document - BC210441 - Pg 101 of 512 - 30/08/2021 - ComplyNZ

- **Flexible sill and jamb tapes** - flexible flashing tapes complying with NZBC Acceptable Solution E2/AS1 Paragraph 4.3.11, or flexible flashing tapes covered by a valid BRANZ Appraisal for use around window and door joinery openings.
- **Window and door trim cavity air seal** - air seals complying with NZBC Acceptable Solution E2/AS1 Paragraph 9.1.6, or self expanding, moisture cure polyurethane foam air seals covered by a valid BRANZ Appraisal for use around window, door and other wall penetration openings.

Paint System Specification

4.4 At least two coats of a 100% acrylic-based exterior paint must be used over the finishing plasters to make the system weathertight and give the desired finish colour to exterior walls. Specialized Construction Products Ltd allows the use of other acrylic exterior paint systems over the finishing plasters. An acrylic exterior paint system complying with any of Parts 7, 8, 9 or 10 of AS 3730 may be used. Paint colours must have a light reflectance value of 25% minimum regardless of gloss value. Proprietary paint systems not supplied by Specialized Construction Products Ltd have not been assessed and are therefore outside the scope of this Appraisal.

Handling and Storage

5.1 Handling and storage of all materials supplied by Specialized Construction Products Ltd or the approved applicators, whether on or off site, are under the control of Specialized Construction Products Ltd approved applicators. Dry storage must be provided on site for the EZpanel panels, fibreglass mesh and bags of plaster. EPS battens, uPVC flashings and profiles must be protected from direct sunlight and physical damage, and should be stored flat and under cover. Liquid components must be stored in frost-free conditions.

5.2 Handling and storage of all materials supplied by the building contractor, whether on or off site, are under the control of the building contractor. Materials must be handled and stored in accordance with the relevant manufacturer's instructions.

Technical Literature

6.1 Refer to the Appraisals listing on the BRANZ website for details of the current Technical Literature for the EZpanel Cavity System. The Technical Literature must be read in conjunction with this Appraisal. All aspects of design, use, installation and maintenance contained in the Technical Literature and within the scope of this Appraisal must be followed. Reference can also be made to the BRANZ Texture Coated Claddings Good Practice Guide for general design and installation information.

Design Information

Framing

Timber Treatment

7.1 Timber wall framing behind the EZpanel Cavity System must be treated as required by NZBC Acceptable Solution B2/AS1.

Timber Framing

7.2 Timber framing must comply with NZS 3604 for buildings or parts of buildings within the scope limitations of NZS 3604. Buildings or parts of buildings outside the scope of NZS 3604 must be to a specific design in accordance with NZS 3603 and AS/NZS 1170. Where specific design is required, the framing must be of at least equivalent stiffness to the framing provisions of NZS 3604. In all cases studs must be at maximum 600 mm centres. Dwangs must be fitted flush between the studs at maximum 800 mm centres.

Readers are advised to check the validity of this Appraisal by referring to the Valid Appraisals listing on the BRANZ website, or by contacting BRANZ.

KDC - Approved Building Consent Document - BC210441 - Pg 102 of 512 - 30/08/2021 - ComplyNZ

7.3 For specifically designed timber framed buildings situated in Wind Zones above NZS 3604 defined Extra High, there must be a minimum timber framing size of 90 x 45 mm, and a minimum timber grade of MSG8.

7.4 Timber framing must have a maximum moisture content of 24% at the time of the cladding application. *(Note: If EZpanel panels are fixed to framing with a moisture content of greater than 24% problems may occur at a later date due to excessive timber shrinkage.)*

Steel Framing

7.5 Steel framing must be to a specific design meeting the requirements of the NZBC.

7.6 The minimum framing specification is 'C' section studs and nogs of overall section size of 75 mm web and 32 mm flange. Steel thickness must be a minimum 0.75 mm.

7.7 In all cases, studs must be at maximum 600 mm centres. Dwangs must be fitted flush between the studs at maximum 800 mm centres.

EZpanel Setout

7.8 EZpanels are installed horizontally. Vertical panel edges may be jointed on-stud or off-stud. Horizontal EZpanel panel edges do not require edge fixing, but where 41 mm EPS cavity battens are used with steel framed construction, the bottom row of EZpanels must be fully supported on a rebated foundation. Vertical panel joints must be staggered for each row. The EZpanels must be supported at fixing locations with vertical cavity battens or cavity spacers 100 mm long maximum in accordance with the requirements of NZBC Acceptable Solution E2/AS1, Paragraph 9.1.8.2 (f). At the base of the wall, the EZpanel panels must hang 50 mm below the supporting framing.

General

8.1 When the EZpanel Cavity System is used for specifically designed buildings up to design differential 2.5 kPa ULS wind pressure, only the weathertightness aspects of the cladding, maximum framing centres and EZpanel fixing centres are within the scope of this Appraisal. All other aspects of the building need to be specifically designed and are outside the scope of this Appraisal.

8.2 Punchings in the base bead and head flashing provide a minimum ventilation opening area of 1,000 mm^2 per lineal metre of wall in accordance with the requirements of NZBC Acceptable Solution E2/AS1, Paragraph 9.1.8.3(b).

8.3 The ground clearance to finished floor levels as set out in NZS 3604 must be adhered to at all times. At ground level, paved surfaces, such as footpaths, must be kept clear of the bottom edge of the cladding system by a minimum of 100 mm, and unpaved surfaces by 175 mm in accordance with the requirements of NZBC Acceptable Solution E2/AS1, Table 18. *(Note: A detail showing EZpanel carried into the ground is included in the Technical Literature. This detail is outside the scope of this Appraisal and approval for its use is by specific design.)*

8.4 At balcony, deck or roof/wall junctions, the bottom edge of the EZpanel Cavity System must be kept clear of any adjacent surface, or above the top surface of any adjacent roof flashing by a minimum of 35 mm in accordance with the requirements of NZBC Acceptable Solution E2/AS1, Paragraph 9.1.3.

8.5 All external walls of buildings must have barriers to airflow in the form of interior linings with all joints stopped for Wind Zones up to and including Very High, and rigid underlays for buildings in the Extra High Wind Zone and specifically designed buildings up to 2.5 kPa design differential ULS wind pressure. Unlined gables and walls must incorporate a rigid sheathing or an air barrier which meets the requirements of NZBC Acceptable Solution E2/AS1, Table 23. For attached garages, wall underlays must be selected in accordance with NZBC Acceptable Solution E2/AS1, Paragraph 9.1.3.4. Where rigid underlays are used, the fixing lengths must be increased by a minimum of the thickness of the underlay.

8.6 Where penetrations through the EZpanel Cavity System are wider than the cavity batten spacing, allowance must be made for airflow between adjacent cavities. A minimum 10 mm gap must be left between the bottom of the vertical cavity batten and the flashing to the opening.

Readers are advised to check the validity of this Appraisal by referring to the Valid Appraisals listing on the BRANZ website, or by contacting BRANZ.

KDC - Approved Building Consent Document - BC210441 - Pg 103 of 512 - 30/08/2021 - ComplyNZ

8.7 Where the system abuts other cladding systems, designers must detail the junction to meet their own requirements and the performance requirements of the NZBC. The Technical Literature provides some guidance. Details not included within the Technical Literature have not been assessed and are outside the scope of this Appraisal.

Electrical Cables

8.8 PVC sheathed electrical cables must be prevented from direct contact with EPS cavity battens. When cables must penetrate the EPS cavity battens for exterior electrical connections, the cable must be directly supported by passing through an electrical conduit. There is no separation requirement for PVC sheathed electrical cables passing through EZpanel panels.

Control Joints

9.1 Control joints where EZpanel panels are used must be constructed in accordance with the Technical Literature and be provided as follows:

- **Horizontal control joints** - at maximum 6.0 m centres and at inter-storey floor levels.
- **Vertical control joints** - at maximum 8.0 m centres; aligned with any control joint in the structural framing, or where the system abuts different cladding types.

(Note: Horizontal and vertical control joints must be located over structural supports. The Technical Literature provides some guidance for the design of vertical control joints where the system abuts different cladding types. Details not included within the Technical Literature are outside the scope of this Appraisal and are the responsibility of the designer - see Paragraph 8.7.)

Inter-storey Junctions

9.2 Inter-storey drained joints must be constructed in accordance with the Technical Literature. Inter-storey joints must be provided to limit continuous cavities to the lesser of 2-storeys or 7 m in height, in accordance with the requirements of NZBC Acceptable Solution E2/AS1, Paragraph 9.1.9.4 (b).

Structure

Mass

10.1 The mass of the EZpanel Cavity System is approximately 34.5 kg/m^2, therefore it is considered a medium wall cladding in terms of NZS 3604.

Impact Resistance

10.2 The system has adequate resistance to impact loads likely to be encountered in normal residential use. The likelihood of impact damage to the system when used in light commercial situations should be considered at the design stage, and appropriate protection such as the installation of bollards and barriers should be considered for vulnerable areas.

Wind Zones

10.3 The EZpanel Cavity System is suitable for use in all Wind Zones of NZS 3604, up to, and including 'Extra High' where buildings are designed to meet the requirements of NZBC Acceptable Solution E2/AS1, Paragraph 1.1, or up to design differential 2.5 kPa ULS wind pressure when the buildings are specifically designed.

EZpanel Fixing (EPS Cavity Battens)

10.4 EZpanel panels must be fixed through the cavity battens and cavity spacers to the wall framing at maximum centres specified in Table 1.

Readers are advised to check the validity of this Appraisal by referring to the Valid Appraisals listing on the BRANZ website, or by contacting BRANZ.

KDC - Approved Building Consent Document - BC210441 - Pg 104 of 512 - 30/08/2021 - ComplyNZ

Table 1: EZpanel fixing centres

Wind Zone / Wind Pressure	Fixing Centres (mm) to studs[1]
NZS 3604 Wind Zones up to and including Extra High and specific design wind pressures up to design differential 2.5 kPa ULS with studs at maximum 600 mm centres	300

1. Fixings to be positioned 150 mm in from the panel edge giving an overall fixing layout of 300 mm vertical centres.

Cavity Batten Block and EZpanel Fixing

10.5 Cavity batten blocks must be fixed to the timber framing with two 75 x 3.15 mm hot-dip galvanised ring shank flat head nails, spaced 100 to 140 mm apart from each other. The cavity batten blocks must be fixed to the studs at maximum 600 mm horizontal centres (stud centres), and at maximum 600 mm vertical centres (at all horizontal joints between EZpanel panels). Additional cavity batten blocks may be required at corners and around openings. EZpanel panels must be fixed to the cavity batten blocks with 75 mm long wood screws with a head diameter of 14 mm and a shank diameter of 5.3 mm. The screws must be positioned 50 mm minimum from the edge of the panel and the fixing heads must finish 5 mm below the surface of the panel. The cavity batten block and EZpanel fixing centres as detailed in this paragraph are suitable for NZS 3604 Wind Zones up to and including Extra High and specific design wind pressures up to design differential 2.5 kPa ULS.

Durability

11.1 The EZpanel Cavity System meets the performance requirements of NZBC Clause B2.3.1 (b), 15 years for the cladding system and plaster finish, and the performance requirements of NZBC Clause B2.3.1 (c), 5 years for the exterior paint system.

Serviceable Life

11.2 The EZpanel Cavity System is expected to have a serviceable life of at least 30 years provided the system is maintained in accordance with this Appraisal, and the EZpanel panels, fixings and plaster are continuously protected by a weathertight coating and remain dry in service.

11.3 Microclimatic conditions, including geothermal hot spots, industrial contamination and corrosive atmospheres, and contamination from agricultural chemicals or fertilisers can convert mildly corrosive atmosphere into aggressive environments for fasteners. The fixing of EZpanel panels in areas subject to microclimatic conditions requires specific design in accordance with NZS 3604 Paragraph 4.2.4, and is outside the scope of this Appraisal.

Maintenance

12.1 Regular maintenance is essential to ensure the performance requirements of the NZBC are continually met and to ensure the maximum serviceability of the system.

12.2 Regular cleaning (at least annually) of the paint coating is required to remove grime, dirt and organic growth and to maximise the life and appearance of the coating. Grime may be removed by brushing with a soft brush, warm water and detergent. Paint systems must be recoated at approximately 5-8 yearly intervals in accordance with the paint manufacturer's instructions.

12.3 Annual inspections must be made to ensure that all aspects of the cladding system, including the coating system, plasters, flashings and any sealed joints remain in a weatherproof condition. Any cracks, damaged areas or areas showing signs of deterioration which could allow water ingress, must be repaired immediately. The EZpanel Cavity System must be repaired in accordance with the instructions of Specialized Construction Products Ltd.

12.4 Minimum ground clearances as set out in this Appraisal and the Technical Literature must be maintained at all times during the life of the system. *(Failure to adhere to the minimum ground clearances given in this Appraisal and the Technical Literature will adversely affect the long term durability of the EZpanel Cavity System.)*

Readers are advised to check the validity of this Appraisal by referring to the Valid Appraisals listing on the BRANZ website, or by contacting BRANZ.

KDC - Approved Building Consent Document - BC210441 - Pg 105 of 512 - 30/08/2021 - ComplyNZ

Prevention of Fire Occurring

13.1 The EZpanel panels are considered a non-combustible material and need not be separated from heat sources such as fireplaces, heating appliances, flues and chimneys. However, when used in conjunction with, or attached to heat sensitive materials, the heat sensitive material must be separated from heat sources such as fire places, heating appliances, flues and chimneys in accordance with the requirements of Part 7 of NZBC Acceptable Solutions C/AS1 and C/AS2 and NZBC Verification Method C/VM1.

Fire Affecting Areas Beyond the Fire Source

Vertical Fire Spread

14.1 This Appraisal only covers buildings 10 m or less in height. NZBC Functional Requirement C3.2 identifies that external vertical fire spread to upper floors only needs be considered for buildings with a building height greater than 10 m. Control of external vertical fire spread is therefore outside the scope of this Appraisal.

Horizontal Fire Spread

14.2 The EZpanel panels and plaster finishes have a peak heat release rate of less than 100 kw/m^2 and a total heat released of less than 25 MJ/m^2. Testing was carried out as per Paragraph 5.4 of NZBC Acceptable Solution C/AS1 and Paragraph 5.8.1 of NZBC Acceptable Solution C/AS2, achieving a Type A performance. The EZpanel Cavity System can therefore be used within 1 m of the relevant boundary.

14.3 Refer to NZBC Acceptable Solutions C/AS1 and C/AS2 and Verification Method C/VM2 for fire resistance rating and control of external fire spread requirements for external walls.

Fire Resistance Rating of External Walls

15.1 EZpanel Cavity System can be used for load-bearing and non-load-bearing walls to provide two-way passive fire protection. Fire Resistance Ratings (FRRs) of up to 120/120/120 can be achieved with the system. Construction details are contained in the Technical Literature and must be strictly followed to obtain the required FRR.

Movement to Place of Safety

Structural Stability during Fire

16.1 In order to satisfy the requirements of NZBC C6 Structural Stability, designers must ensure that elements with a FRR are structurally supported by elements with at least the equivalent FRR.

External Moisture

17.1 The EZpanel Cavity System, when installed in accordance with this Appraisal and the Technical Literature, prevents the penetration of moisture that could cause undue dampness or damage to building elements.

17.2 The cavity must be sealed off from the roof and sub-floor space to meet the performance requirements of Clause E2.3.5.

17.3 The EZpanel Cavity System allows excess moisture present at the completion of construction to be dissipated without permanent damage to building elements to meet the performance requirements of Clause E2.3.6.

17.4 The details given in the Technical Literature for weather sealing are based on the design principle of having a first and second line of defence against moisture entry for all joints, penetrations and junctions. The ingress of moisture must be excluded by detailing joinery and wall interfaces as shown in the Technical Literature. Weathertightness details that are developed by the designer are outside the scope of this Appraisal and are the responsibility of the designer for compliance with the NZBC.

17.5 The use of the EZpanel Cavity System where there is a designed cavity drainage path for moisture that penetrates the cladding, does not reduce the requirement for junctions, penetrations, etc. to remain weather resistant.

Readers are advised to check the validity of this Appraisal by referring to the Valid Appraisals listing on the BRANZ website, or by contacting BRANZ.

KDC - Approved Building Consent Document - BC210441 - Pg 106 of 512 - 30/08/2021 - ComplyNZ

Internal Moisture

18.1 The EZpanel Cavity System alone does not meet NZBC Acceptable Solution E3/AS1, Paragraph 1.1.1 (a). Buildings must be constructed with an adequate combination of thermal resistance and ventilation, and space temperature must be provided to all habitable spaces, bathrooms, laundries and other spaces where moisture may be generated or may accumulate.

Water Vapour

18.2 The EZpanel Cavity System is not a barrier to the passage of water vapour, and when correctly installed will not create or increase the risk of moisture damage resulting from condensation. Refer to Paragraph 18.3 below for specific requirements for steel framed buildings.

18.3 When the EZpanel Cavity System is installed over a steel frame, an expanded polystyrene thermal break must be installed over the building underlay over each steel member to provide a thermal break in accordance with the requirements of NZBC Acceptable Solution E3/AS1, Paragraph 1.1.4 (d). The cavity battens and the rest of the EZpanel Cavity System are then installed over top of the thermal break in accordance with the Technical Literature and this Appraisal.

Installation Information

Installation Skill Level Requirements

19.1 All design and building work must be carried out in accordance with the EZpanel Cavity System Technical Literature and this Appraisal. All building work must be undertaken by Specialized Construction Products Ltd Approved Applicators. Where the work involves Restricted Building Work this must also be completed by, or under the supervision of, a Licensed Building Practitioner (LBP) with the relevant License class.

System Installation

Building Underlay and Flexible Sill and Jamb Tape Installation

20.1 The selected building underlay and flexible sill and jamb tape system must be installed by the building contractor in accordance with the underlay and tape manufacturer's instructions prior to the installation of the cavity battens and the rest of the EZpanel Cavity System. Flexible building underlay must be installed horizontally and be continuous around corners. Underlay must be lapped 75 mm minimum at horizontal joints and 150 mm minimum over studs at vertical joints. Generic rigid sheathing materials must be installed in accordance with NZBC Acceptable Solution E2/AS1 and be overlaid with a flexible wall underlay. Proprietary systems shall be installed in accordance with the manufacturer's instructions. Particular attention must be paid to the installation of the building underlay and sill and jamb tapes around window and door openings to ensure a continuous seal is achieved and all exposed wall framing in the opening is protected.

20.2 Where studs are at greater than 450 mm centres and a flexible wall underlay is being used, a building underlay support must be installed over the underlay at maximum 300 mm centres horizontally.

Aluminium Joinery Installation

20.3 Aluminium joinery must be installed by the building contractor in accordance with the Technical Literature. A 7.5-10 mm nominal gap must be left between the joinery reveal and the wall framing so a PEF rod and air seal can be installed after the joinery has been secured in place. The joinery must be spaced 22-23 mm off of the wall frame to allow the EZpanel Cavity System flashings to be installed.

The EZpanel Cavity System

20.4 The system must be installed in accordance with the Technical Literature by Specialized Construction Products Ltd approved applicators.

20.5 The EZpanel Cavity System plaster system must only be applied when the air and substrate temperature is within the range of +5°C to +30°C.

Readers are advised to check the validity of this Appraisal by referring to the Valid Appraisals listing on the BRANZ website, or by contacting BRANZ.

KDC - Approved Building Consent Document - BC210441 - Pg 107 of 512 - 30/08/2021 - ComplyNZ

Inspections

20.6 The Technical Literature must be referred to during the inspection of EZpanel Cavity System installations.

Finishing

20.7 The paint manufacturers' instructions must be followed at all times for application of the paint finish. The plaster must be cured for a minimum of 2-3 days and must be dry before commencing painting.

Health and Safety

21.1 Cutting of EZpanel Cavity System panels must be carried out in well ventilated areas, and a dust mask and eye protection must be worn.

21.2 When power tools are used for cutting, grinding or forming holes, health and safety measures must be observed because of the amount of dust generated.

21.3 Safe use and handling procedures for the components that make up the EZpanel Cavity System are provided in the relevant manufacturer's Technical Literature.

Basis of Appraisal

The following is a summary of the technical investigations carried out:

Tests

22.1 The following testing has been undertaken by BRANZ:

- BRANZ expert opinion on NZBC E2 code compliance for the EZpanel Cavity System was based on evaluation of all details within the scope and as stated within this Appraisal and testing of the Caviteclad Wall Cladding System to E2/VM1 (as contained within NZBC Clause E2, Amendment 5). The testing assessed the performance of the foundation detail, window head, jamb and sill details, meter box head, jamb and sill details, vertical and horizontal control joints, internal and external corners and balustrade to wall junction with a plastered cap. The EZpanel Cavity System follows the same flashing and weathertightness design principles as the Caviteclad Wall Cladding System. In addition to the weathertightness test, the details contained within the Technical Literature have been reviewed, and an opinion has been given by BRANZ technical experts that the system will meet the performance levels of Acceptable Solution E2/AS1 for drained cavity claddings.
- Wind face load and fastener pull through testing for the EZpanel Cavity System. BRANZ determined design wind suction pressures, and by comparing these pressures with the NZS 3604 design wind speeds and AS/NZS 1170 pressure coefficients, the fixing requirements were determined for timber and steel framed walls.
- In-plane shear testing of the EZpanel Cavity System to determine the system's ability to resist its self-weight.
- A racking test was completed to examine the performance of the EZpanel Cavity System when the system was subjected to both serviceability level and ultimate level seismic racking deflections, taken to be ±8 mm and ±36 mm respectively. The plaster system did not crack or show signs of damage for the entire test program.
- Durability testing of the EZpanel panels to verify the durability of the system. The testing included compressive strength, length change during moisture movement, corrosion protection of steel reinforcement and mineralogy by x-ray diffraction crystallography.
- Cone calorimeter testing to determine the peak rate of heat release and total heat release. The results were used to provide an assessment of the EZpanel Cavity System. The testing was carried out in accordance with ISO 5660.
- Fire resistance testing of EZpanel loadbearing timber framed wall systems was carried out in accordance with AS 1530.4.

Readers are advised to check the validity of this Appraisal by referring to the Valid Appraisals listing on the BRANZ website, or by contacting BRANZ.

KDC - Approved Building Consent Document - BC210441 - Pg 108 of 512 - 30/08/2021 - ComplyNZ

Other Investigations

23.1 Structural and durability opinions have been provided by BRANZ technical experts.

23.2 Site inspections of EZpanel Cavity System installations have been carried out by BRANZ to assess the practicability of installation, and to examine completed installations.

23.3 The Technical Literature for the EZpanel Cavity System has been examined by BRANZ and found to be satisfactory.

Quality

24.1 The manufacture of the plasters has been examined by BRANZ, including methods adopted for quality control. Details regarding the quality and composition of the materials used were obtained by BRANZ and found to be satisfactory.

24.2 The manufacture of the EZpanel panels has been examined by an agent of BRANZ, including methods adopted for quality control. Details regarding the quality and composition of the materials used were obtained by BRANZ and found to be satisfactory.

24.3 The quality of materials, components and accessories supplied by Specialized Construction Products Ltd is the responsibility of Specialized Construction Products Ltd.

24.4 Quality on site is the responsibility of the Specialized Construction Products Ltd approved applicators.

24.5 Designers are responsible for the building design, and building contractors are responsible for the quality of installation of framing systems and joinery, building wraps, flashing tapes and air seals in accordance with the instructions of Specialized Construction Products Ltd.

24.6 Building owners are responsible for the maintenance of the EZpanel Cavity System installations in accordance with the instructions of Specialized Construction Products Ltd.

Sources of Information

- AS 1530.4: 2014 Methods for fire tests on building materials, components and structures. Fire-resistance tests for elements of construction.
- AS 3566.2: 2002 Self-drilling screws for the building and construction industries.
- AS 3730: 2006 Guide to the properties of paints for buildings.
- AS/NZS 1170: 2002 Structural design actions.
- AS/NZS 4534: 2006 Zinc and zinc/aluminium-alloy coatings on steel wire.
- BRANZ Good Practice Guide: Texture-coated Claddings, 3rd Edition, May 2018.
- ISO 5660.1: 2002 Heat release rate (cone calorimeter method).
- NZS 3602: 2003 Timber and wood-based products for use in building.
- NZS 3603: 1993 Timber Structures Standard.
- NZS 3604: 2011 Timber-framed buildings.
- NZS 4211: 2008 Specification for performance of windows.
- Ministry of Business, Innovation and Employment Record of amendments - Acceptable Solutions, Verification Methods and handbooks.
- The Building Regulations 1992.

Readers are advised to check the validity of this Appraisal by referring to the Valid Appraisals listing on the BRANZ website, or by contacting BRANZ.

KDC - Approved Building Consent Document - BC210441 - Pg 109 of 512 - 30/08/2021 - ComplyNZ

In the opinion of BRANZ, the EZpanel Cavity System is fit for purpose and will comply with the Building Code to the extent specified in this Appraisal provided it is used, designed, installed and maintained as set out in this Appraisal.

The Appraisal is issued only to Specialized Construction Products Ltd, and is valid until further notice, subject to the Conditions of Appraisal.

Conditions of Appraisal

1. This Appraisal:
   a) relates only to the product as described herein;
   b) must be read, considered and used in full together with the Technical Literature;
   c) does not address any Legislation, Regulations, Codes or Standards, not specifically named herein;
   d) is copyright of BRANZ.
2. Specialized Construction Products Ltd
   a) continues to have the product reviewed by BRANZ;
   b) shall notify BRANZ of any changes in product specification or quality assurance measures prior to the product being marketed;
   c) abides by the BRANZ Appraisals Services Terms and Conditions;
   d) warrants that the product and the manufacturing process for the product are maintained at or above the standards, levels and quality assessed and found satisfactory by BRANZ pursuant to BRANZ's Appraisal of the product.
3. BRANZ makes no representation or warranty as to:
   a) the nature of individual examples of, batches of, or individual installations of the product, including methods and workmanship;
   b) the presence or absence of any patent or similar rights subsisting in the product or any other product;
   c) any guarantee or warranty offered by Specialized Construction Products Ltd.

   Any reference in this Appraisal to any other publication shall be read as a reference to the version of the publication specified in this Appraisal.
4. BRANZ provides no certification, guarantee, indemnity or warranty, to Specialized Construction Products Ltd or any third party.

For BRANZ

Chelydra Percy
Chief Executive

Date of Issue:
27 May 2020

Readers are advised to check the validity of this Appraisal by referring to the Valid Appraisals listing on the BRANZ website, or by contacting BRANZ.

EZPANEL INSTALLATION GUIDE



EZPanel
LIGHTWEIGHT CONCRETE CLADDING SYSTEM

KDC - Approved Building Consent Document - BC210441 - Pg 110 of 512 - 30/03/2021 - ComplyNZ

Project Details

Project Name:

Project Address:

Specification Prepared For:

Specifier's Name:

Date:

Certified Specialized Plastering Contractor:

Licensed Building Practitioner Number:

BRANZ Appraised
Appraisal No.649 (2009)

NEW ZEALAND MADE

Contact Us

Specialized Construction Products Ltd

Auckland Branch
79 Porana Rd, Glenfield
Ph: + 64 9 414 4499

Christchurch Branch
178b Carlyle Rd, Sydenham
Ph: + 64 3 365 3202

Tauranga Branch
90a Maleme St, Greerton
Ph: 07 541 3384

info@specialized.co.nz
www.specialized.co.nz

Introduction

The EZpanel System is a cavity based autoclaved aerated concrete (AAC) panel system which when finished with a layer of fibreglass reinforced polymer modified plaster creates a lightweight, highly durable exterior cladding. As well as providing advantages to the exterior envelope by way of increases in impact resistance and performance during fire, EZpanels will not rot, are pest resistant and have excellent sound insulation properties. The exterior nature of the EZpanels also places their insulation characteristics as close as possible to where temperatures fluctuate reducing ongoing energy consumption compared to most conventional exterior wall systems.

The system is applied over a 20mm 0r 40mm cavity. The system is fully flashed around all penetrations to ensure water doesn't enter the cavity. Unlike wet cavity systems, this negates the need for vents through the panels both above windows and under soffits as is required for plastered brick veneer construction.

EZPanel

LIGHTWEIGHT CONCRETE CLADDING SYSTEM

KDC - Approved Building Consent Document - BC210441 - Pg 111 of 512 - 30/08/2021 - ComplyNZ

All the uPVC flashings, fibreglass mesh, resin and plaster components used for the EZpanel System must be supplied by Specialized Construction Products Ltd or one of its Certified Distributors.

The EZpanel System has been tested and appraised for use throughout New Zealand. (BRANZ Appraisal No. 649)

This Manual has been set out as near as possible to the actual construction sequence. Preparation, fixing the EZpanels to various types of framing and backgrounds, sealing the joinery and masking out, preparation of EZpanels prior to plastering and finally the plaster techniques and sequences. This guide must be read in conjunction with the detail data sheets for the EZpanel System.

Framing Set Out (Timber or Steel)

Timber framing must comply with NZS3604 for buildings or parts of buildings within the scope limitations of NZS 3604. Buildings or parts of buildings outside the scope of NZS3604 must be to a specific design in accordance with NZS 3603 and AS/NZS 1170. In all cases studs must be set out at 600mm maximum centres. Dwangs/nogs must be flush fitted at maximum 800mm centres. Timber framing must have a maximum moisture content of 24% at the time cladding commences.

For steel framing the minimum framing specification is 'C' section studs and nogs of overall section size 75mm web and 32mm flange. Steel thickness must be a minimum of 0.75mm

Building Wrap

A building wrap complying with NZBC Acceptable Solution E2/AS1 Table 23, or breather-type membranes covered by a valid BRANZ Appraisal must be used in all circumstances. Building wrap must be installed horizontally and be continuous around corners. The wrap must be lapped 75 mm minimum at horizontal joints and 150 mm minimum over studs at vertical joints. Where studs are at greater than 450 mm centres, polypropylene strap or additional vertical cavity battens must be installed at maximum 300 mm centres to prevent bulk insulation bulging into the cavity. Flexible sill and jamb flashing tapes complying with NZBC Acceptable Solution E2/AS1, Paragraph 4.3.11 or flexible sill and jamb flashing tapes covered by a valid BRANZ Appraisal must be used around all penetrations. All penetrations must have internal air seals applied.

Head Flashings

Proprietary head flashings with minimum ventilation openings of 1000mm2 per lineal metre must be installed over all window heads and door openings. If proprietary head flashings cannot be used, an acceptable alternative flashing must be provided. Please contact Specialized Construction Products Ltd for advice.

Flashings In General

Joists designed to carry decks need to have a continuous flashing fitted before the EZpanels are fixed. Check if there are any special back-flashings required where the EZpanel joins another substrate or curtain wall construction.

Roofing

Where areas over roofs need to be plastered, the roof/wall flashing, including stop ends must be installed by the roofing contractor prior to the commencement of cladding.

Pipes & Meter Boxes

It is critical that pipes are flashed appropriately in accordance with E2/AS1, Fig 68. All pipes must have the building paper turned to the outside of the building and have the building paper taped to the pipe. All pipes must have a downward rake of 5° minimum and must be sealed in place using Silaflex MS or another approved equivalent both before plastering and after the installation of the EZpanel base coat.

All meter boxes must be installed according to the detailed drawings provided with the EZpanel system. A polystyrene wedge must be placed and sealed with a waterproofing membrane onto the top of the meter box and must be able to drain water unimpeded into the cavity behind the cladding.

Particular attention to detail and workmanship must be given to the weatherproofing details contained in the technical literature relating to flashing and sealing building penetrations or junctions with other building materials. All junctions between the EZpanel substrate and dissimilar materials must be correctly flashed and sealed with MS Silaflex or another approved equivalent. The MS sealant must be installed in strict accordance with the manufacturer's requirements and must be left to properly cure prior to plastering.

Scaffolding

Don't accept second best. You need a continuous freestanding scaffold at least 300mm clear of the framing. Movable frames can be used, but you need enough to complete one whole wall at one time.

Site Storage

Products in dry form must be stored in a dry area, off the floor on a timber pallet or timber dunnage and it must be protected from the weather and from mechanical damage. Rotate the stock to ensure that the oldest material is used first. Plaster stock that is older than six months should be discarded. EPS battens, uPVC flashings and profiles must be protected from direct sunlight and physical damage. They should be stored flat and under cover. Liquid components must be stored in a frost free area.

Preparation of Masonry & Concrete Surfaces (Direct Fix Applications)

All nibs, protrusions and excess mortar on the surface of the bricks/blocks or irregularities in the slab must be ground off prior to plastering.

All surfaces to receive an application of the EZpanel System must be clean and free of debris, dirt and dust, efflorescence, grease, oils, curing agents, cleaning solutions, mould and algae or any other contaminants that may affect adhesion. Painted or glossy surfaces must be specially treated prior to the application of any plaster material, please refer to Specialized Construction Products Ltd for specialist advice before you proceed. All cracks that may be the subject to ongoing movement must be correctly repaired and reinforced.

EZPanel
LIGHTWEIGHT CONCRETE CLADDING SYSTEM

KDC - Approved Building Consent Document - BC210441 - Pg 112 of 512 - 30/08/2021 - ComplyNZ

Some smooth, dense concrete surfaces must be slush coated before the application of the EZpanel with Tankit bonding plaster to ensure suitable adhesion is created, please refer to Specialized Construction Products Ltd for specialist advice before you proceed. Tilt slab and other precast concrete items should be chemically cleaned with a water blaster to ensure any mould release agents are removed before the plaster is applied. All very porous surfaces should be sealed with an appropriate paint sealer prior to the application of the bonding plaster. Failing to correctly prepare the masonry substrate, may affect the aesthetic appearance of the finished wall.

Do not wet down masonry surfaces before plastering and do not apply base coat plaster to surfaces that are wet from rain or overnight dew.

Fitting EZpanel Battens

20mm Cavity - EZpanel battens are manufactured from ultra high density (Class UHD) expanded polystyrene with an approximate density of 28kg/m3 and measure 21mm x 45mm. They must be fixed to the framing with nails/staples or an appropriate polystyrene compatible adhesive in accordance with the batten layout shown in the detail data sheets.

40mm Cavity – EZpanel battens for a 40mm cavity installation are manufactured from either; (a) Ultra High Density (class UHD) expanded polystyrene with an approximate density of 28kg/m3 measuring 40mm X 55mm and are fixed with an appropriate polystyrene compatible adhesive or 50mm galvanised flat head nails or (b) 40 X 40 X 200 H3.2 timber batten ties with a minimum slope of 15 degrees on the top edge, fixed with 75mm galvanised ringshank nails. 40mm polystyrene battens must only be used in situations where the bottom edge of the sheet is fully supported by a rebate in the slab or an appropriate weight bearing lintel.

All battens must be fixed to the framing over the surface of the chosen building paper in accordance with the batten layout shown in the detail data sheets. Additional vertical battens may be required at internal and external corners and openings. At the soffit the airflow must be blocked off with a continuous horizontal batten and gables must be lined or incorporate an air barrier which meets the requirements of NZBC Acceptable Solution E2/AS1, Table 23. Non-rigid air barriers must have an air resistance of >0.1MN s/m3. Where rigid sheathings are used, the fixing length must be increased by a minimum of the thickness of the sheathing. Horizontal battens must be a maximum length of 100mm long in accordance with the requirements of NZBC Acceptable Solution E2/AS1, Paragraph 9.1.8.2 (f) and can be fixed into place on all noggins/dwangs where required for fixing with a minimum of a 5-degree angle on the top edge. The fewer horizontal battens that are used the better.

Fitting Sill & Jamb Flashings

The use of the EZpanel uPVC sill and uPVC jamb flashings is **MANDATORY.** It is also **MANDATORY** that the sill and jamb flashings are joined in the corner with an EZpanel corner socket using Marley uPVC pipe cement.

Begin by marking and cutting your sill flashing so that it extends 4-5mm past either end of the aluminium joinery (i.e. overall 8-10 mm wider than the window). Once the sill is cut, wipe the left hand end with pipe cement and slide it onto the prongs of the corner socket. Next wipe the right hand end with pipe cement and slide on the right hand corner socket. Slide the socket into place under the window flange and staple it into place as you did with the other end. Next cut your jamb flashings 40mm longer than the length of the window and cut the capillary lip off the top so that the top edge of the capillary lip will finish flush with the top of the joinery when it is slid into place (i.e. overall the jamb should protrude approximately 40mm above the top of the window). Once the jambs have been cut and test fitted, choose one side and wipe the top of the corner socket with pipe cement. Immediately tuck the capillary lip of the jamb flashing behind the flange of the joinery and slide the jamb down into place onto the top of the socket and then repeat the same set of instructions for the other side. When the jambs are in place cut your head flashing 6mm wider than the joinery and glue a uPVC stop end to the flashing before it is stapled into place. Once firmly in place, seal the head flashing uPVC stop ends onto the jamb flashing using Silaflex MS sealant. Once all the flashings are in place seal the jamb flashing to the joinery in the 5mm gap provided by the small block on the jamb flashing and then seal the corner socket to sill flashing. You must also run a bead of sealant along under the joinery to seal the vulnerable gap where the sill flashing meets the joinery.

Sealing around windows is one of the most critical operations for the success of the EZpanel system. The data sheets detail in pictorial terms how the instruction above should be carried out. Follow these details explicitly.
Basic principles to apply when sealing your windows:-

1. Don't be mean with your application of sealant or pipe cement. All beads of sealant must be 5mm across.

2. The sealant has to have a reasonable area to seal against so make sure the background is clean and dry.

3. Always lightly tool or spread your sealant into place with your finger.

Soffits

Soffits shall be fixed into place before the cladding is installed and allowance made to close off the cavity with framing or battens to stop airflow into the roof space. A 5 mm bead of Silaflex MS sealant should be installed at the soffit/EZpanel intersection after the EZpanel is put in place and before plastering commences. In the case of reverse raking soffits or soffits less than 450mm wide a flashing or piece of Protecto EIFS tape shall be provided in accordance with the details shown in the technical literature.

Fixing The EZpanels

The sheets are butt jointed except at corners where one sheet overlaps the other to form a straight finish. The EZpanels must be supported at fixing locations

EZPanel

LIGHTWEIGHT CONCRETE CLADDING SYSTEM

KDC - Approved Building Consent Document - BC210441 - Pg 113 of 512 - 30/08/2021 - ComplyNZ

with cavity spacers a maximum of 100mm long in accordance with the requirements of NZBC Acceptable Solution E2/AS1, Paragraph 9.1.8.2(f). Each additional layer of panels must be installed so that the panel joints are staggered by a minimum of 150mm.

All panels must have their edges and there ends buttered with EZfix PU adhesive as they are being installed. The edges of all of the EZpanel sheets must be free of all dust and debris (preferably blown down with compressed air) and should be sprayed down with a mist of water straight before the glue is applied. The glue should be laid in a bead approximately 6-8mm in width before the next sheet is laid onto its edge. This practice should be done as quickly as possible to ensure the glue remains as pliable as possible to aid in the adhesion of the panels. Care must be taken when applying the glue to ensure it does not ooze either into the cavity or onto the outside of the dwelling. Once the panels have been joined and screwed into place any excess glue that oozes out of the joints between the panels should be wiped off or cut from the surface before it has fully cured. The glue must be allowed to dry before the application of the mesh coat.

Care should be taken to carefully cut any irregular shaped holes that may be required. A jigsaw with a steel tooth blade is ideal for this purpose. It is not acceptable to simply cut a square hole for a round outlet and then assume the remaining gap will be plugged with plaster. Gaps and holes in and between the panels must only ever be filled with Ezstop Plaster and must not be filled with expanding foam. The differential thermal characteristics of the expanding foam and the AAC panels will generate a weak point in the system that can be susceptible to thermal cracking.

At the base of walls the finished level of the EZpanel must be at least 50mm below the supporting framing. Additional framing may be required at soffits, internal and external corners and window and door openings for the support and fixing of sheet edges.

Construction joints must be provided as follows:

Horizontal Control Joints – at maximum 6.0m centres and at inter-storey floor levels where unseasoned timber floor joists are used

Vertical Control Joints – at maximum 8.0m centres; aligned with any control joints in the structural framing, or where the system abuts different cladding types

Care should be taken with the chosen placement of control joints. To avoid difficult multi-faceted joints between the various PVC extrusions used in the EZpanel System, control joints should be placed away from the edges of joinery by a minimum of 400mm. Placing control joints directly above and below the joinery creates a weak point where the PVC's intersect that could lead to potential water ingress if not maintained or excessive movement occurs.

Construction joint details are provided in the drawings provided with the system. Inter-storey drained joints must be provided for walls over 2 storeys in height in accordance with the requirements of NZBC Acceptable Solution E2/AS1, Paragraph 9.1.9.4(b). Inter-storey junctions must be constructed in accordance with the technical literature.

The bottom edges of the EZpanels can either be capped with a 50mm High Back U-Channel which is attached to the bottom plate of the dwelling prior application or with a 50mm lipped base bead once they have been fixed into place and trimmed as may be necessary.

Timber Framing

There are four categories listed in NZS 3604: Low, Medium, High and Very High. The 'Building Wind Zone' for the job to be completed must be clearly understood before the application of any plaster.

Fixing Over EPS Battens

EZpanel panels are fixed through the polystyrene cavity battens and spacers to the studs with 100mm or 120mm long Class 4 galvanised or Grade 302 stainless steel screws that have a head size of 14mm. Typically the screws are placed into the panels 150mm from the outside edge giving overall fixing centres of approximately 300mm. Two screws should be put into each stud per panel. Refer to the table 1 for fixing centres.

Table 1: NZS 3604 Wind Zone Fixing Centres for EZpanel Edges and Intermediate Studs

Wind Zone/Pressure	Fixing Centres
Low	300mm
Medium	300mm
High	300mm
Very High	300mm

In high and very high wind zones the screw spacing around penetrations should be reduced to approximately 200mm. This ensures any possible movement between the joinery frame and the finished EZpanel is greatly reduced.

Fixing Over Timber Batten Blocks

For timber framed buildings, installations in NZS3604 Wind Zones up to, and including, 'Extra High' and specific design wind pressures up to and including design differential 2.5kPa ULS, the cavity battens must be fixed to the timber framing with two 75mm long galvanised or stainless steel ring-shank nails. Battens are fixed to studs at maximum 600 horizontal centres, at all horizontal joints between the EZpanels. Additional battens may be required at corners and around openings. The EZpanels are fixed to the battens with 10g x 75mm long, countersunk head Class 4 galvanised screws (Grade 302 Stainless in sea spray zones). The screws must be positioned 50mm minimum from the edge of the panel and the fixing heads must finish 5mm below the surface of the panel.

Steel Framing

The same fixing centres apply as for timber framing. Use Specialized Construction Products Ltd self-drilling 100 mm long AS 3566 Corrosion Class 4 self-drilling screws with a head diameter of 14 mm and a shank diameter of 5.1 mm in NZS 3604 defined Corrosion Zones 1, 2, 3 and 4 and Grade

EZPanel
LIGHTWEIGHT CONCRETE CLADDING SYSTEM

KDC - Approved Building Consent Document - BC210441 - Pg 114 of 512 - 30/08/2021 - ComplyNZ

304 Stainless Steel in the sea spray zone.

Concrete & Masonry

(Note: This application is outside the scope of the BRANZ Appraisal.)

To bond EZpanel to masonry surfaces mix up Specialized Construction Products Fine Base Coat plaster with the addition of 1 litre of Specialized Construction Products resin per bag. Cut the EZpanel to size and check the fit. All of the EZpanel to receive a coat of Fine Base Coat must be properly sealed prior to the application of the plaster. To seal the panel a mix of 2 parts water to 1 part Specialized Resin must be painted over the surface and allowed to dry before bonding commences. Failing to correctly prepare and seal the aerated concrete substrate may cause delamination or failure. Once sealed apply the Fine Base Coat plaster to the back of the sheet with a grooved trowel around the perimeter and in vertical strips every 400mm. If there isn't a rebate in the concrete slab, EZpanel masonry anchors must be used to hold the sheets in place while the plaster is drying and to provide a mechanical fix for the EZpanel. Bed each sheet back against the wall, keeping a check that the sheets are flat by using a straight edge across their face. To ensure no thermal bridges are formed keep all the edges closely butted and clear of adhesive plaster.

Finishing The EZpanel

Around the base of the building ensure all lines are straight and level. Trim and adjust where necessary.

Use a two metre straight edge and check the flatness of the EZpanel surfaces. Use a Durarasp to sand off any large irregularities or Specialized's 'Ezstop' plaster to fill any large hollows in the surface of the EZpanels to ensure the surfaces are level and the corners and edges are straight. When sanding and/or skimming is complete, sweep the walls clean of any loose material or dust.

Only once you are satisfied with the flatness of the EZpanel and the lines of the edges, fix any additional uPVC beading (i.e. uPVC corners and base U-channels) and seal around the perimeter (i.e. under the soffit).

Fixing The UPVC Beads

All exposed EZpanel corners and bottom edges must be protected by gluing on the appropriate uPVC section. Your detail drawings show what bead goes where.

The beads are glued on with Maxilam PB Adhesive. Apply glue to all contact surfaces. With the cartridge glue, slide each uPVC bead along the EZpanel edge to spread the glue, pull away slightly for 20 seconds, and then slide into place. This spreading of the glue and allowing a few seconds for the solvents to "flash off" is very important. If you don't, the bead can come unstuck. Be careful not to cover the drainage holes punched in the base extrusions with glue.

Masking

Careful masking of windows, doors, roofing, decks and any other areas where plaster overspray or plaster droppings may occur is critical. Don't be mean with your protection work as it is a very costly exercise to replace roof areas and glazing because your masking wasn't up to the job. Use uPVC or vinyl tape for masking, wet strength masking paper or preferably plastic sheet material.

1. Mask out windows or doors completely to the edge of the aluminium. This will provide a nice finishing line for the 5mm sealant detail. Mask all other areas 5mm away from the edge of the EZpanel to allow for plaster build-up. Use uPVC, cloth or vinyl tape around the perimeter.

2. Don't be tempted to use the paper-backed masking tape where it will get plastered over. The tape softens and falls off.

3. After the mesh/plaster coat or subsequent base coats (not the final texture coat) remove excess plaster by running your finger around the edge masking tape, and then clean the wet plaster edge with a damp paint brush. This ensures the masking tape isn't buried under hard plaster.

Stopping Up

After the EZpanel has; been sanded flat and cleaned down, the uPVC flashings are in place, the windows are sealed, and all the masking is complete, all surfaces that are to be plastered must be sealed using EZpanel sealer. Using a hawke and trowel, or broad knife and EZstop plaster; fill all the screw head holes, stop up and level out the edges of all uPVC beading and fill in any remaining out of level areas of sheet joints. It is important not to "over-stop" screw holes or joints. Don't leave thick edges of plaster because they will "grin through" the finished work.

Sealing The Substrate

The surface of the EZpanels must be properly sealed prior to the application of any plaster. To seal the EZpanels, apply one good coat of undiluted Specialized EZpanel sealer over the entire surface of the dwelling and allow it to completely dry before plastering commences. EZpanel sealer can be applied with a pump-up sprayer, long nap roller or wide paint brush at a spread rate of 10-12m2 per litre. Failing to correctly prepare and seal the surface of the aerated concrete panels may cause delamination, chalking or failure in the base coat.

EZpanel Plaster Preparation

The instructions for mixing are clearly spelt out on the bag. Note: During summer, you can add one litre of resin per bag to help the plaster cure better in hot weather.

It is important that each mix stands for approximately 10 minutes, and is then re-stirred and the final consistency adjusted. This allows the thickening agents in the plaster to take effect and stops the brew becoming too thick too quickly. Do not use plaster that has been mixed for more than one hour. The plaster will continue to stiffen slightly over the hour.

If you are spraying fine base coat plaster to provide a textured finish it is acceptable to add small amounts of water to maintain a regular consistency. In fact if you don't keep the plaster mix adjusted with a little water every now and then, your texture coat will

EZPanel
LIGHTWEIGHT CONCRETE CLADDING SYSTEM

KDC - Approved Building Consent Document - BC210441 - Pg 115 of 512 - 30/08/2021 - ComplyNZ

vary. Clean your hopper gun, stirrer and bins between mixes. This will stop you getting contamination in fresh mixes, and will keep your gun spraying evenly.

Plaster & Mesh Coat

The areas around all penetrations should be completed first using EZpanel Base Coat or Fine Mesh Coat to bed soft flexible 160g/m2 alkali resistant mesh. A piece of soft mesh must be used to reinforce the sill, jamb and head flashing onto the surface of the panels and in the corner of any penetration where the sills and jambs meet. Make sure the plaster is scraped hard back to the EZpanel on the outer edges of the mesh. Once all the window reveals, parapet tops and backs, bottom edges and other awkward areas have been completed using the soft flexible narrow mesh, all the flat areas of wall should be done using a 160g/m2 alkali resistant hard mesh combined with EZpanel Base Coat plaster.

EZpanel Base Coat plaster is usually trowel applied with a long 20" x 4" or 20" x 5" steel trowel. The large trowel ensures the first coat of plaster can't be squeezed out too thin.

1. Start at the corner of a wall. Check all masking is done and drop cloths are in place. Plaster a full height section of wall about one and a half metres wide (the width of the mesh). You are aiming for 3mm thickness with this first coat.

2. Cut a length (drop) of mesh slightly longer than the wall area to be covered. Place the mesh against the wet plaster at the top of the EZpanel. The outer corner edge of the mesh must be 100 to 200mm past the corner of the wall.

3. Wipe the mesh very lightly at first into the plaster, starting at the middle and working out. Make sure there are no bubbles or wrinkles in the mesh. Once the mesh is flat against the plaster, apply an even trowel pressure and embed the mesh just below the surface of the plaster. Do not force the mesh hard down onto the surface of the EZpanel. The mesh pattern should be "grinning" through, but the mesh itself completely covered with plaster.

4. Apply a 100 to 200mm band of plaster around the corner and embed the overhanging corner mesh. Once embedded scrape away the plaster at the edge of the mesh to ensure there is no plaster ridge there when you join on later.

5. Repeat the process. Drops of hard mesh do not have to overlap but should be tightly butt joined. If the mesh isn't going to be overlapped any butt join that is created must offset any vertical join in the panels by a minimum of 150mm. The mesh and plaster coat must cover all EZpanel surfaces including the EZpanel edges around all window reveals and sills.

6. At the corners of all openings, apply a second layer of mesh 100 x 200mm (butterfly) embedded on the diagonal. This greatly reduces the chance of any subsequent cracking at these high stress points.

Finishing Options

There are four options once the first mesh and plaster coat have been applied: -

Option 1: Stucco Texture

Fine base coat plaster can be sprayed through a hopper gun or a sagola gun to achieve a heavy stucco plaster finish.

Each 20kg bag of Fine base coat plaster is mixed with approximately 5 litres of clean drinking water. Place all the water for your plaster mix into a clean bucket and while stirring with a powered whisk, add the 20kg bag of plaster and mix to an even consistency. Let the mix stand for 5 minutes and give it a quick restir before application and adjust the final consistency if it is necessary.

The object is to spray on a "wet" second coat of plaster 1 to 2mm thick that will flow together to form a solid flat looking texture coat. The technique could be likened to spray painting where you move on once you have achieved a "wet" finish. Fine base coat plaster mixed wetter than for a mesh coat, sprayed through a hopper gun with a 9mm tip is best for this type of texture.

Once the first spray coat is starting to "tack-off" or going grey dry, you can start to apply the final texture coat. The plaster mix for this third and final coat is about the same as for the mesh coat or slightly stiffer and is known as a "flick coat". The object is to have a plaster mix that won't run together like the previous coat. Use a 7mm nozzle.

The final texture coat is only meant to be a quick flick. The "flick-coat" will even out any discrepancies and provide a uniform texture finish. You will only use approximately 20% of the amount of plaster you used to do your first coat of spray texture. Spray part of this final texture in horizontal bands and part in vertical bands to ensure a uniform even finish. Do not stay too long in one area, as the texture coat will flow together, causing patchiness.

Always texture the external and internal corners first before doing the adjacent large wall areas. It is also good practice to spray the reveals around windows from the inside out and then fill in the areas of wall between these places.

A stucco spray texture must be finished with two coats of Plastershield100% acrylic paint or an approved latex exterior paint system in accordance with the paint specification.

Option 2: Float Finish

Float Finish is a polymer modified cement based plaster which is polished flat to achieve a fine granular finish. The smooth plaster will not cover up background imperfections, particularly when walls are subject to side lighting at certain times of the day.

Each 20kg bag of Float Finish is mixed with approximately 5 litres of clean drinking water. Place all the water for your plaster mix into a clean bucket and while stirring with a powered whisk, add the 20kg bag of plaster and mix to an even consistency. Let the mix stand for 5 minutes and give it

KDC - Approved Building Consent Document - BC210441 - Pg 116 of 512 - 30/08/2021 - ComplyNZ

a quick restir before application and adjust the final consistency if it is necessary.

On large walls float finish should be applied by two or more people to ensure a wet edge is maintained. Float finish must be applied in two coats to ensure an even texture is achieved. Begin by trowelling on one tight coat of the float finish plaster with a large steel trowel using the aggregate in the plaster to establish the thickness. Once the first coat has dried, trowel on another coat of the same material (mixed to a slightly thinner consistency) over its surface. As soon as this coat has been laid down with the steel trowel flat, begin polishing its surface with a hard plastic float in a circular motion. This will cut the surface of the wall flat. Regularly clean the excess plaster off the plastic float with a broad knife to reduce the potential for swirl marks. If the plastic float is picking up too much material or is leaving swirl marks on the surface, this indicates that the plaster has not been laid on tight enough with the steel trowel. Finish with a gentle polish of the surface with the plastic float to minimise any slight swirl marks or surface irregularities. Every now and again stand back a couple of metres from the wall and inspect your work to ensure an even finish is being achieved.

Float finish can either be left as it has been finished with the plastic float or while it is still wet (but firm to touch), normally only 5 minutes after application, it can be polished with a damp sponge to close the pores in the texture. Polishing the surface of the walls with a sponge will also remove a small amount of the fines in the plaster giving the wall a grainy look.

Float Finish must be finished with two coats of Plastershield 100% acrylic paint or an approved latex exterior paint system in accordance with the paint specification.

Option 3: Spanish Finish

Spanish Finish is a polymer-modified, cement based plaster used to achieve an undulating adobe style finish. This product can be applied in various thicknesses and using a number of different techniques.

Before finish coating begins ensure the style of finish that is desired has been correctly communicated and understood by the plasterer. A trial sample is highly recommended.

Each 20kg bag of Spanish Finish is mixed with approximately 5 litres of clean drinking water. Once you have established how much water gives you the consistency you want, maintain this measured amount of water for the rest of your mixes. Place all the water for your plaster mix into a clean bucket and while stirring with a powered whisk, add the 20kg bag of plaster and mix to an even consistency. Let the mix stand for 5 minutes and give it a quick restir before application and adjust the final consistency if it is necessary.

The finished thickness of the Spanish Finish must be between 2 to 10mm.

To achieve an uneven application of the Spanish finish use a short steel trowel and apply the plaster in a random fashion using a good amount pressure. Avoid excessive movement of the plaster under the trowel once it has been applied to the wall, otherwise you run the risk of delamination. Allow a little time for the plaster to 'suck off' and then polish all the sharp marks out of the surface using a damp sponge.

If a very thick layer of Spanish finish is being applied for a heavy pattern, wiping over the undulations using a wet soft bristled paint brush can help to soften the surface before it is sponged.

Spanish Finish must be finished with two coats of Plastershield100% acrylic paint or an approved latex exterior paint system in accordance with the paint specification.

Option 4: Baumit GranoporTop 1.5mm Acrylic Texture or GranoporFine 1.0mm Acrylic Texture

(It is recommended to seal the base coat plaster with Baumit Tiefengrund primer before applying Baumit Granopor. Allow to dry for 24 hours).

GranoporTop 1.5mm Acrylic Texture is a ready to use, synthetic resin-based render which is polished flat to achieve a fine granular finish.

GranoporFine 1.0mm Acrylic Texture is a ready to use, synthetic resin-based render which is polished flat to achieve a fine granular finish or sprayed through a hopper gun or a sagola gun to achieve a fine stippled appearance. Smooth textures will not cover up background imperfections, particularly when walls are subject to side lighting at certain times of the day.

Granopor is to be mixed thoroughly with a stirrer before application. The consistency can be adjusted by adding a little bit of water. Baumit Granopor is to be applied to the entire surface with a rust-free steel trowel or sprayed on with a suitable plaster machine, levelled to grain thickness and rubbed with a plastic plasterer's float. Do not mix with other substances. Work evenly and without interruption.

Air, material and subsurface temperatures have to be higher than +5 degrees Celsius during processing and setting. Protect façade against direct solar radiation, rain or strong wind (e.g. scaffolding protection net). High temperatures during summer shorten the drying time and can lead to untimely drying out of the plaster.

Curing

The curing time of finishing plaster will vary due to ambient temperature, relative humidity, surface temperature, surface porosity, application methods, and/or the thickness of the material. All freshly applied material must be protected from inclement weather for a minimum of 24 hours after application. It is the responsibility of the plaster applicator to determine if the product is cured and/or dry prior to applying any additional coats that may be required or exposing the applied product to rain, snow, dew, and/or any other inclement weather condition that may have a detrimental effect. Although some of the finishes contain cement and will not fully cure for 28 days, as long as it is lightly hosed down with fresh water 12 hours prior to painting, it can be painted after the finish coats have cured for a minimum of 3-4 days. Acrylic plaster finishes can be painted as soon as the finished surface has

EZPanel
LIGHTWEIGHT CONCRETE CLADDING SYSTEM

KDC - Approved Building Consent Document - BC210441 - Pg 117 of 512 - 30/08/2021 - ComplyNZ

hardened enough for application to take place.

Paint specification

One of the following paint systems must be used over the EZpanel finishing plasters to make the system weathertight and give the desired finish colour to exterior walls.

Plastershield is a 100% acrylic-based paint that has been specially formulated for use over cement based plasters. Plastered surfaces must be coated with a minimum of 2 coats of Plastershield tinted to the selected colour and applied by brush and roller at a spread rate of approximately 6m2/litre. If a dark colour is being applied, we highly recommend that a coat of lime stop/limelock is applied to the finished plaster before painting commences.

As an alternative to Plastershield, a latex based exterior paint system complying with any of Parts 7, 8, 9 or 10 of AS 3730 may be used. The paint system must be applied in accordance with the paint manufacturer's instructions.

Other paint systems are not covered by this specification sheet and Specialized Construction Products Ltd will not warrant the use or suitability of alternative paint systems over the surface of its plaster finishes.

The chosen paint system must have a Light Reflective Value (LRV) of no less than 25.

Limitations

DO NOT apply plaster when the ambient or surface temperature is below 4°C or above 30°C or will be in that range for the 24-hour period after application. When hot, dry, or windy conditions exist, moist curing and protection must be provided. Material that is allowed to freeze or material that dries too quickly may suffer irreparable damage.

DO NOT add any other materials to the plasters used with the system or deviate from the mixing or application procedures outlined in any of Specialized Construction Product's technical data sheets without written approval from Specialized Constructions Products Ltd.

DO NOT apply any plaster unless the substrate has been properly cleaned and prepared.

DO NOT add any more water than prescribed by the technical data sheet for the individual products.

DO NOT wet the wall prior to the application of any plaster material.

DO NOT reactivate any plaster with more water once it has begun to set.

DO NOT mix more plaster than you can use in 45 minutes

NOTE:
Failure to follow the manufacturer's written specifications could result in the following but not limited to spalling, cracking, peeling, chipping, delamination, discoloration, wash off, and overall system failure.

General

1. Use longer steel trowels rather than short ones. The longer trowel covers the area quicker and gives a flatter finish. A long trowel will stop workers from skimping on plaster, as they are unable to push the mesh back into a thin coat of plaster. This helps quality control.

2. Have plenty of plaster buckets and water buckets on the job. Keep a 3" paint brush and water bucket handy for finishing those narrow edges and corners.

3. When applying a stucco texture keep your hopper gun clean and adjusted and your compressor pumping out 90 to 100 PSI. Remember once or twice every day to clean out your air jet with a 1/8" drill bit. A piece of wire or nail will not do this job and is unacceptable.

4. When you are spraying, maintain your plaster mix consistency as you use the plaster. Add a little water when you feel the plaster has stiffened a little. This is critical for a good texture coat. Do not attempt this with plaster that is older than 30 minutes.

5. Organise your day to try and keep out of the hot summer sun particularly round the middle hours of the day.

6. Try and complete a full length of wall in one go, otherwise it can be difficult to disguise the "cold" joint where you restart the next day. If circumstances prevent you finishing a complete wall, try and stop under the middle of a window opening or something similar. Ensure that you leave a leading edge of mesh uncoated so that you can overlap the new drop of mesh the next day. Also scrape off any excess plaster to further reduce the chances of the "cold" joint showing.

7. The fibreglass mesh must not bridge over any construction joints.

8. There must be no horizontal surfaces of EZpanel wall cladding which will be subject to water ponding.

9. Ensure there is no possibility of water leaking in behind the coating due to poor sealing around projections, etc.

10. Any exposed top or bottom edges of sheets must be protected by UPVC beads or by continuing the plaster system over the edges of the sheets.

11. Carefully peel back masking tape so that the masked edge is left undisturbed. Remember, it is important not to leave this job till last. Pull off masking tape as soon as is practicable, preferably while the finish coat is still "green". This will enable you to clean all masked edges with a dry paintbrush and remove/knock off any larger dags of plaster texture.

12. Alkaline EZpanel plaster will mark aluminium joinery and "Colorsteel" roofing. Any overspray must be cleaned off immediately.

EZPanel
LIGHTWEIGHT CONCRETE CLADDING SYSTEM

KDC - Approved Building Consent Document - BC210441 - Pg 118 of 512 - 30/08/2021 - ComplyNZ

Maintenance

Any paint film damage must be repaired as soon as possible to prevent water penetration and ensure that the high strength properties of the fibreglass mesh are maintained.

Any impact damaged areas must be thoroughly cleared of any loose material and repaired with a Tankit plaster. This will ensure a positive bond between the original plaster and the repaired area. Refinish and repaint within the following week.

The wall cladding system should be regularly cleaned, at least annually, by washing with clean water to remove dirt and to maintain the finish appearance. Grime may be removed with warm water and detergent.

Plastered walls should be recoated with an approved paint system at 5 to 8 yearly intervals or sooner if required to maintain watertightness. Regular checks, at least annually, must be made of the system to ensure that the weather resistant coating is maintained watertight, and that the sealant, flashings, and other joints continue to perform their function and do not allow water to penetrate. Failure to correctly maintain the system may void any long-term warranties offered with the system. Any accidental damage to the cladding must be repaired immediately using Specialized Construction Products materials.

Warranty

The recommendations, suggestions, statements and technical data provided by Specialized Construction Products Ltd are based on the best current knowledge available and are given for information purposes only without any responsibility for their use. It is expressly understood and agreed that the buyer's sole and exclusive remedy shall be the replacement of defective products, and under no circumstance, shall Specialized Construction Products Ltd be liable for incidental or consequential damages. Specialized Construction Products Ltd neither assumes, nor authorizes, any others to assume for it any liability with respect to furnishing of the product. Handling and use of the products are beyond the control of Specialized Construction Products Ltd; therefore, no warranty is made, expressed or implied, as to the results or on site quality that can be obtained from the use of the product. The long-term durability of the EZpanel system is dependent upon the correct preparation and application of all of its components in strict accordance with all the relevant written instructions and detail sheets. On-site application is beyond the control of Specialized Construction Products' and it cannot guarantee workmanship or the correct preparation and application of its products or systems. The licensed EZpanel contractor shall take the overall responsibility for on-site supervision, staff training, installation, and quality control.

System Guarantee Period

15 years from date of practical completion to plastering.

Workmanship Guarantee Period

5 years from date of practical completion to plastering.

Technical Assistance

Assistance and information is available by calling Specialized Construction Products Ltd on **(09) 414 4499** or by e-mail at **info@specialized.co.nz.**

KDC - Approved Building Consent Document - BC210441 - Pg 119 of 512 - 30/03/2021 - ComplyNZ

EZPANEL SPECIFICATION



EZPanel

LIGHTWEIGHT CONCRETE CLADDING SYSTEM

Project details

Project Name:

Project Address:

Specification Prepared For:

Specifier's Name:

Date:

Certified Specialized Plastering Contractor:

Licensed Building Practitioner Number:

BRANZ Appraised
Appraisal No.649 (2009)

NEW ZEALAND MADE

Contact Us

Specialized Construction Products Ltd

Auckland Branch
79 Porana Rd, Glenfield
Ph: + 64 9 414 4499

Christchurch Branch
178b Carlyle Rd, Sydenham
Ph: + 64 3 365 3202

info@specialized.co.nz
www.specialized.co.nz

Introduction

This specification is for the application of Specialized Construction Products EZpanel Autoclaved Aerated Concrete Panel System. The EZpanel system is made up of 50mm Autoclaved Aerated Concrete Panels that are fixed to timber or steel framing over the surface of a 20mm or a 40mm cavity. The backing substrate is then over coated and reinforced with a range of specially blended proprietary cement- or acrylic-based plasters before the walls are finished with a chosen finishing plaster and painted with a 100% acrylic paint system. EZpanels can also be bonded or mechanically fixed to concrete or masonry walls. (Note: This Application is outside the scope of the BRANZ Appraisal.)

All the PVC flashings, fibreglass mesh, resin, fixings and plaster components used for the EZpanel System must be supplied by Specialized Construction Products Ltd or one of its certified distributors.

EZPanel

LIGHTWEIGHT CONCRETE CLADDING SYSTEM

KDC - Approved Building Consent Document - BC210441 - Pg 120 of 512 - 30/08/2021 - ComplyNZ

This specification has been set out as near as possible to the actual construction sequence and it must be read in conjunction with the detail data sheets for the EZpanel System and the EZpanel Installation Guide.

Framing Set Out (Timber or Steel)

Timber framing must comply with NZS 3604 for buildings or parts of buildings within the scope limitations of NZS 3604. Buildings or parts of buildings outside the scope of NZS 3604 must be to a specific design in accordance with NZS 3603 and AS/NZS 1170. In all cases studs must be set out at 600mm maximum centres. Dwangs/nogs must be flush fitted at maximum 800mm centres. All soffit junctions, openings, wall/roof junctions and foundation details must have support for the sheet edges. Timber framing must have a maximum moisture content of 24% at the time cladding commences. For steel framing the minimum framing specification is 'C' section studs and nogs of overall section size 75mm web and 32mm flange. Steel thickness must be a minimum of 0.75mm.

Building Wrap

All external walls of buildings must have barriers to airflow in the form of interior linings with all joints stopped for wind zones up to and including Very High. Unlined gables and walls must incorporate a rigid sheathing or an air barrier which meets the requirements of NZBC Acceptable Solution E2/AS1, Table 23. For attached garages, wall underlays must be selected in accordance with NZBC Acceptable Solution E2/AS1, Paragraph 9.1.3.4. Flexible wall underlay shall be building paper complying with NZBC Acceptable Solution E2/AS1 Table 23, or breather-type membranes covered by a valid BRANZ Appraisal for use as wall underlays. Rigid wall underlay shall be plywood or fibre cement sheet complying with NZBC Acceptable Solution E2/AS1 Table 23, or rigid sheathing covered by a valid BRANZ Appraisal for use as rigid air barrier systems. The selected building underlay and flexible sill and jamb tape system must be installed by the building contractor in accordance with the underlay and tape manufacturer's instructions prior to the installation of the cavity battens and the rest of the EZpanel System. Flexible building underlay must be installed horizontally and be continuous around corners. Underlay must be lapped 75mm minimum at horizontal joints and 150mm minimum over studs at vertical joints. Generic rigid sheathing materials must be installed in accordance with NZBC Acceptable Solution E2/AS1 and be overlaid with a flexible wall under- lay. Proprietary systems shall be installed in accordance with the manufacturer's instructions. Particular attention must be paid to the installation of the building underlay and sill and jamb tapes around window and door openings to ensure a continuous seal is achieved and all exposed wall framing in the opening is protected. Where studs are at greater than 450 mm centres and a flexible wall underlay is being used, a building underlay support must be installed over the underlay at maximum 300mm centres horizontally.

Head Flashings

Proprietary PVC head flashings with minimum ventilation openings of 1000mm2 per lineal metre must be installed over all window heads and door openings. If proprietary PVC head flashings cannot be used, an acceptable alternative flashing must be provided. Please contact Specialized Construction Products Ltd for advice.

Flashings in General

Joists designed to carry decks need to have a continuous flashing fitted before the EZpanel is fixed. Check if there are any special back-flashings required where the EZpanel joins another substrate or curtain wall construction.

Roofing

Where areas over roofs need to be plastered, the roof/wall flashing must be installed prior to the commencement of cladding.

Pipes & Meter Boxes

It is critical that pipes are flashed appropriately in accordance with E2/AS1 fig 68. All pipes must have the building underlay turned to the outside of the building and have the building underlay taped to the outside of the pipe. All pipes must have a downward rake of a minimum of 5° and must be sealed in place using MS Silicone or another approved equivalent both before plastering and after the installation of the base coat. All meter boxes must be correctly flashed in accordance with the detailed drawings for the EZpanel System. Particular attention to detail and workmanship must be given to the weatherproofing details contained in the technical literature relating to flashing and sealing building penetrations or junctions with other building materials. All junctions between the EZpanel substrate and dissimilar materials must be correctly flashed and sealed with MS Silicone or another approved equivalent. The sealant must be installed in strict accordance with the manufacturer's requirements and must be left to properly cure prior to plastering.

Site Storage

Products in dry form must be stored in a dry area, off the floor on a timber pallet or timber dunnage and must be protected from the weather and from mechanical damage. Stock must be rotated to ensure that the oldest material is used first. Plaster stock that is older than six months must be discarded. EPS battens, uPVC flashings and profiles must be protected from direct sunlight and physical damage. They should be stored flat and under cover. Liquid components must be stored in a frost free area.

Preparation of Masonry and Concrete Surfaces

Note: This application is outside the scope of the BRANZ Appraisal.

All surfaces to receive a direct bonded application of the EZpanel System must be clean and free of debris, dirt and dust, efflorescence, grease, oils, curing agents, cleaning solutions, mould and algae or any other contaminants that may affect adhesion. Painted or glossy surfaces must be specially treated prior to the application of any plaster material, please refer to Specialized Construction Products for specialist advice before you proceed. All cracks that may be the subject to ongoing movement must be correctly repaired and reinforced.

EZPanel

LIGHTWEIGHT CONCRETE CLADDING SYSTEM

KDC - Approved Building Consent Document - BC210441 - Pg 121 of 512 - 30/08/2021 - ComplyNZ

Some smooth, dense concrete surfaces must be slush coated before the application of the EZpanel bonding plaster to ensure suitable adhesion is created, please refer to Specialized Construction Products for specialist advice before you proceed. Tilt slab and other precast concrete items should be chemically cleaned with a water blaster to ensure any mould release agents are removed before the plaster is applied. All very porous surfaces should be sealed with an appropriate paint sealer prior to the application of the bonding plaster. Failing to correctly prepare the masonry substrate, may affect the aesthetic appearance of the finished wall. Do not wet down masonry surfaces before plastering and do not apply base coat plaster to surfaces that are wet from rain or overnight dew.

EZpanel Battens

20mm Cavity – EZPanel battens for a 20mm cavity installation are manufactured from Ultra High Density (Class UHD) expanded polystyrene with an approximate density of 28kg/m3 and measure 21mm X 50mm.

40mm Cavity – EZpanel battens for a 40mm cavity installation are manufactured from either; (a) Ultra High Density (class UHD) expanded polystyrene with an approximate density of 28kg/m3 measuring 41mm X 50mm and are fixed with glue or 50mm galvanised flat head nails or (b) 40 X 40 X 200 H3.2 timber batten blocks with a minimum slope of 15 degrees on the top edge, fixed with two 75mm galvanised ring shank nails. 40mm polystyrene battens must only be used in situations where the bottom edge of the sheet is fully supported by a rebate in the slab or an appropriate weight bearing lintel.

All battens must be fixed to the framing over the surface of the chosen building underlay in accordance with the batten layout shown in the detail data sheets. Horizontal battens must be a maximum length of 100mm in accordance with the requirements of NZBC Acceptable Solution E2/AS1, Paragraph 9.1.8.2 (f) and must be fixed into place on all nogs/dwangs where required for fixing with a minimum of a 5 degree angle on the top edge. The fewer horizontal battens that are used the better.

Sill and Jamb Flashings

The use of the EZpanel PVC sill and PVC Jamb flashings is MANDATORY. It is also MANDATORY that the sill and jamb flashings are joined in the corner with a Specialized Construction Products EZpanel corner socket.

Soffits, Gable Ends and Unlined Walls

Soffits shall be fixed into place before the cladding is installed and allowance made to close off the cavity with framing or battens to stop airflow into the roof space. After the mesh and plaster system has been completed a 5mm bead of MS sealant or 'no more gaps' should be installed at the soffit EZpanel intersection. In the case of reverse raking soffits a flashing or piece of Protecto EIFS tape shall be provided in accordance with the details shown in the technical literature.

To ensure the EZpanel substrate is not affected by timber shrinkage in areas that are not traditionally lined (e.g. gable ends), it is highly recommended that the internal walls of these areas are adequately braced with a thin sheet of plywood or an alternative bracing material.

Alternatively, the timber in these areas must have a moisture content of no greater than 18% and must remain that way throughout the entire construction process.

Fixing the EZpanel

The panels are butt jointed except at corners where one panel overlaps the other to form a straight finish. The EZpanel must be supported at fixing locations with cavity spacers a maximum of 100mm long in accordance with the requirements of NZBC Acceptable Solution E2/AS1, Paragraph 9.1.8.2(f). Each additional layer of panels must be installed so that the panel joints are staggered by a minimum of 150mm. Anti-corrosion paint must be applied to all exposed reinforcing in the panels.

All panels must have their edges and their ends buttered with Sabre Fix PU glue as they are being installed. The edges of all of the EZpanel panels must be free of all dust and debris (preferably blown down with compressed air) and should be sprayed down with a mist of water immediately before the glue is applied. The glue should be laid in a bead approximately 6-8mm in width before the next panel is laid onto its edge. This practice should be done as quickly as possible to ensure the glue remains as pliable as possible to aid in the adhesion of the panels. Care must be taken when applying the glue to ensure it does not ooze either into the cavity or onto the outside of the dwelling. Once the panels have been joined and screwed into place any glue excess that oozes out of the joints between the panels should be wiped off or cut from the surface before it has fully cured. The glue must be allowed to dry before the application of the mesh coat.

At the base of walls the finished level of the EZpanel must be at least 50mm below the supporting framing. Additional framing maybe required at soffits, internal and external corners and window and door openings for the support and fixing of sheet edges. As edge fixing is not required for Ezpanel control joints can be created off stud and off nog.

Construction joints must be provided as follows:

- Vertical control joints – at maximum 8m centres; aligned with any control joint in the structural framing, or where the system abuts different cladding types.
- Horizontal control joints – at maximum 6m centres and at inter-storey floor levels where unseasoned timber floor joists are used.

Construction joint details are provided in the drawings provided with the system. Inter-storey drained joints must be provided for walls over 2 storeys or maximum 7m in height in accordance with the requirements of NZBC Acceptable Solution E2/AS1, Paragraph .1.4. Inter-storey junctions must be constructed in accordance with the technical literature.

EZPanel

LIGHTWEIGHT CONCRETE CLADDING SYSTEM

KDC - Approved Building Consent Document - BC210441 - Pg 122 of 512 - 30/08/2021 - ComplyNZ

The bottom edges of the EZpanel can either be capped with a 50mm High Back U-Channel which is attached to the bottom plate of the dwelling prior application or with a 50mm lipped base bead once they have been fixed into place and trimmed as may be necessary.

Timber Framing

There are five categories listed in NZS 3604: Low, Medium, High, Very High and Extra High. The "Wind Zone" for the job must be clearly understood before the application of any EZpanel.

Fixing over EPS battens

EZpanel panels are fixed through the polystyrene cavity battens and spacers to the studs with 100mm or 120mm long Class 4 galvanised or Grade 302 stainless steel screws that have a head size of 14mm. Typically the screws are placed into the panels 150mm from the outside edge giving overall fixing centres of approximately 300mm. Two screws should be put into each stud per panel. Refer to the table 1 for fixing centres.

Fixing to timber battens

For timber framed buildings, installations in NZS3604 Wind Zones up to, and including, 'Extra High' and specific design wind pressures up to and including design differential 2.5kPa ULS, the timber battens/blocks must be fixed to the timber framing with two 75mm long galvanised or stainless steel ring-shank nails. The battens are fixed to the studs at maximum 600mm horizontal centres (stud centres), and at maximum 600mm vertical centres (at all horizontal joints between the EZpanel). Additional battens may be required at corners and around openings. The EZpanels are fixed to the battens with 10g x 75mm long, countersunk head Class 4 galvanised screws (Grade 302 Stainless in sea spray zones). The screws must be positioned 50mm minimum from the edge of the panel and the fixing heads should finish 5mm below the surface of the panel. The need to screw off at 200mm centres on bottom plates is not required for timber battens. However, if more fixing is preferred this can easily be achieved by correctly positioning additional timber batten blocks.

Table 1: EZpanel fixing centres through EPS battens

Wind Zone/Wind Pressure	Fixing centres (mm) to studs
Low - Very High NZS 3604 defined Wind Zones with studs at maximum 600 mm centres	300
NZS 3604 Wind Zone Extra High and specifically designed buildings up to design differential 2.5 kPa ULS wind pressure with studs at maximum 600 mm centres	300

1. Fixings to be positioned 150mm in from the panel edge giving an overall fixing layout of 300 mm vertical centres.

Steel Framing

The same fixing centres apply as for timber framing. Use Specialized Construction Products Ltd self-drilling 100mm long AS 3566 Corrosion Class 4 self-drilling screws with a head diameter of 14mm and a shank diameter of 5.1mm in NZS 3604 defined Exposure Zones B, C and D. EPS battens only for steel frame.

Concrete & Masonry

(Note: This application is outside the scope of the BRANZ Appraisal.)

To bond EZpanel to masonry surfaces mix up Specialized Construction Products Fine Mesh Coat plaster with the addition of 1 litre of Specialized Construction Products resin per bag. Cut the EZpanel to size and check the fit. All of the EZpanel to receive a coat of Fine Mesh Coat must be properly sealed prior to the application of the plaster. To seal the panel a mix of 2 parts water to 1 part Specialized Resin must be painted over the surface and allowed to dry before bonding commences. Failing to correctly prepare and seal the aerated concrete substrate may cause delamination or failure in the system. Once sealed apply the Fine Mesh Coat plaster to the back of the sheet with a grooved trowel around the perimeter and in vertical strips every 400mm. If there isn't a rebate in the concrete slab, EZpanel masonry anchors must be used to hold the sheets in place while the plaster is drying and to provide a mechanical fixing.

Sealing the Substrate

The surface of the EZpanels must be properly sealed prior to the application of any plaster. To seal the EZpanels, apply one good coat of undiluted Specialized EZpanel sealer over the entire surface of the dwelling and allow it too completely dry before plastering commences. EZpanel sealer can be applied with a pump up sprayer, long nap roller or wide paint brush at a spread rate of 10-12m2 per litre. Failing to correctly prepare and seal the surface of the aerated concrete panels may cause delamination, chalking or failure in the base coat.

PVC Beads

All exposed corners and bottom edges must be protected by gluing on the appropriate PVC section. The beads are glued on with Sbrefix PS Adhesive.

Stopping Up Prior to Mesh Coating

Once the EZpanels have been correctly fixed, a two metre straight edge should be used to check the flatness of the walls surface. Durarasps should be used to sand off any large irregularities. Deviations and holes in the surface of the EZpanels should be filled with EZstop plaster and screeded flat. Once the surface is flat and true all screw holes and PVC extrusions should be stopped with a layer of Fine Mesh Coat plaster. This will help to ensure any shrinkage in the preceding mesh coat is kept to a minimum. Only once the walls are flat and true and have been well stopped should mesh coating commence.

EZPanel

LIGHTWEIGHT CONCRETE CLADDING SYSTEM

KDC - Approved Building Consent Document - BC210441 - Pg 123 of 512 - 30/08/2021 - ComplyNZ

CEMENT PLASTER OPTION (A)

Mesh Coating

The areas around all penetrations should be completed first by using Fine Mesh Coat imbedded in soft flexible 160g/m2 alkali resistant mesh to all reveals. A piece of soft mesh must be used to reinforce the head, sill and jamb flashing onto the surface of the panels and in the corner of any penetration where the sills and jambs meet. Once all penetrations and awkward areas have been completed all the flat areas of wall should be done using a 160g/m2 alkali resistant hard mesh embedded in EZpanel base coat. Drops of hard mesh do not have to overlap, but should be tightly butt joined. If the mesh isn't going to be overlapped any butt join that is created must offset any vertical join in the panels by a minimum of 150mm.

Finishing Options

There are six options once the EZpanel base coat plaster and mesh have been applied:

Option 1: Stucco Texture

Fine base coat plaster can be sprayed through a hopper gun or a sagola gun to achieve a heavy stucco plaster finish.

Option 2: Float Finish

Float Finish is a polymer modified cement based plaster which is polished flat to achieve a fine granular finish. The smooth plaster will not cover up background imperfections, particularly when walls are subject to side lighting at certain times of the day.

Option 3: Spanish Finish

Spanish Finish is a polymer-modified, cement based plaster used to achieve an undulating adobe style finish. This product can be applied in various thicknesses and using a number of different techniques. Before finish coating begins ensure the style of finish that is desired has been correctly communicated and understood by the plasterer. A trial sample is highly recommended.

Option 4: Fine Spray Texture

Spray texture is a granular plaster designed to give a fine stippled appearance. Spray texture is best applied using a sagola gun with a 7mm tip and with the compressor set at approximately 60psi.

Option 5: GranoporTop 1.5mm Acrylic Texture

Ready to use, synthetic resin-based render which is polished flat to achieve a fine granular finish.

Option 6: Granopor Fine 1.0 mm Acrylic Texture

Ready to use, synthetic resin-based render which is polished flat to achieve a fine granular finish or sprayed through a hopper gun or a sagola gun to achieve a fine stippled appearance. Smooth textures will not cover up background imperfections, particularly when walls are subject to side lighting at certain times of the day

ACRYLIC PLASTER OPTION (B)

Powaflex Acrylic System

The areas around all penetrations should completed first using Powaflex imbedded in soft flexible 160g/m2 alkali resistant mesh to all reveals. A piece of soft mesh must be used to reinforce the head flashings, jambs and sills onto the surface of the panels and in the corner of any penetration where the sills and jambs meet. Once all penetrations and awkward areas have been completed all the flat areas of wall should be done using a 160g/m2 alkali resistant hard mesh.
Drops of hard mesh do not have to overlap but should be tightly butt joined. If the mesh isn't going to be overlapped any butt join that is created must offset any vertical join in the panels by a minimum of 150mm.

Finishing Options

There are two options once the Powaflex Base Coat as been applied:

Option 1: GranoporTop 1.5mm Acrylic Texture

Ready to use, synthetic resin-based render which is polished flat to achieve a fine granular finish.

Option 2: Granopor Fine 1.0 mm Acrylic Texture

Ready to use, synthetic resin-based render which is polished flat to achieve a fine granular finish or sprayed through a hopper gun or a sagola gun to achieve a fine stippled appearance. Smooth textures will not cover up background imperfections, particularly when walls are subject to side lighting at certain times of the day

Curing

The curing time of finishing plaster will vary due to ambient temperature, relative humidity, surface temperature, surface porosity, application methods, and/or the thickness of the material. All freshly applied material must be protected from inclement weather for a minimum of 24 hours after application. It is the responsibility of the plaster applicator to determine if the product is cured and/or dry prior to applying any additional coats that may be required or exposing the applied product to rain, snow, dew, and/or any other inclement weather condition that may have a detrimental affect. Although some finishes contain cement and will not fully cure for 28 days, as long as it is lightly hosed down with fresh water 12 hours prior to painting, it can be painted after the finish coats have cured for a minimum of 3-4 days.

Painting

One of the following paint systems must be used over the EZpanel finishing plasters to make the system weathertight and give the desired finish colour to exterior walls. Plastershield is a 100% acrylic-based paint that has been specially formulated for use over cement based plasters. Plastered surfaces must be coated with a minimum of 2 coats of Plastershield tinted to the selected colour and applied by brush and roller at a spread rate of approximately 6m2/litre.

As an alternative to Plastershield, a latex based exterior paint system complying with any of Parts 7, 8, 9 or 10 of AS 3730 may be used. The paint system must be applied in accordance with the paint manufacturer's instructions.
Other paint systems are not covered by this specification sheet and Specialized Construction Products Ltd will not warrant the use or suitability of alternative paint systems over the surface of its plaster finishes.
The chosen paint system must have a Light Reflective Value (LRV) of no less than 25.

EZPanel

LIGHTWEIGHT CONCRETE CLADDING SYSTEM

KDC - Approved Building Consent Document - BC210441 - Pg 124 of 512 - 30/08/2021 - ComplyNZ

Limitations

DO NOT apply plaster when the ambient or surface temperature is below 4°C or above 30°C or will be in that range for the 24-hour period after application. When hot, dry, or windy conditions exist, moist curing and protection must be provided. Material that is allowed to freeze or material that dries too quickly may suffer irreparable damage.

DO NOT add any other materials to the plasters used with the system or deviate from the mixing or application procedures outlined in any of Specialized Construction Product's technical data sheets without written approval from Specialized Constructions Products Ltd.

DO NOT apply any plaster material unless the substrate has been properly cleaned and prepared.

DO NOT add any more water than prescribed by the technical data sheet for the individual products.

DO NOT wet the wall prior to the application of any plaster.

DO NOT reactivate any plaster with more water once it has begun to set.

DO NOT mix more plaster than you can use in 45 minutes.

NOTE: Failure to follow the manufacturer's written specifications could result in the following but not limited to spalling, cracking, peeling, chipping, delamination, discoloration, wash off, and overall system failure.

Maintenance

Any paint film damage must be repaired as soon as possible to prevent water penetration and ensure that the high strength properties of the fibreglass mesh are maintained. Any impact damaged areas must be thoroughly cleared of any loose material and repaired with a 1:1 mixture of resin and water mixed with the required amount of EZpanel plaster. This will ensure a positive bond between the original plaster and the repaired area. Repaint within the following week. The wall cladding system should be regularly cleaned, at least annually, by washing with clean water to remove dirt and to maintain the finish appearance. Grime may be removed with warm water and detergent. Plastered walls should be recoated with an approved paint system at 5 to 8 yearly intervals or sooner if required to maintain weather-tightness. Regular checks, at least annually, must be made of the system to ensure that the weather resistant coating is maintained watertight, and that the sealant, flashings, and other joints continue to perform their function and do not allow water to penetrate. Failure to correctly maintain the system may void any long term warranties offered with the system. Any accidental damage to the cladding must be repaired immediately using Specialized Construction Products materials. For further information please refer to Specialized Construction Products plaster maintenance guide.

Warranty

The recommendations, suggestions, statements and technical data provided by Specialized Construction Products Ltd are based on the best current knowledge available and are given for information purposes only without any responsibility for their use. It is expressly understood and agreed that the buyer's sole and exclusive remedy shall be the replacement of defective products, and under no circumstance, shall Specialized Construction Products Ltd be liable for incidental or consequential damages. Specialized Construction Products Ltd neither assumes, nor authorizes, any others to assume for it any liability with respect to furnishing of the product. Handling and use of the products are beyond the control of Specialized Construction Products Ltd; therefore, no warranty is made, expressed or implied, as to the results or on site quality that can be obtained from the use of the product.

The long-term durability of the EZpanel system is dependent upon the correct preparation and application of all of its components in strict accordance with all the relevant written instructions and detail sheets. On-site application is beyond the control of Specialized Construction Products Ltd and it cannot guarantee workmanship or the correct preparation and application of its products or systems. The certified EZpanel contractor shall take the overall responsibility for; on-site supervision, staff training, installation, and quality control.

System Guarantee Period

15 years from date of practical completion to plastering.

Workmanship Guarantee Period

5 years from date of practical completion to plastering.

Technical Assistance

Assistance and information is available by calling Specialized Construction Products Ltd on **(09) 414 4499** or by e-mail at **info@specialized.co.nz.**

Specialized Construction Products Ltd
EZpanel AAC Panel Cladding System

Product Technical Statement: 101753

miproducts
THE NATIONAL PRODUCT DATABASE

Lightweight autoclaved aerated concrete panel and plaster system
View miproducts listing



masterspec partner

Level of assurance needed to demonstrate NZ Building Code Compliance

M
MEDIUM

Supporting documentation should include technical information by manufacturer and either an independent assessment or reference to an industry-based scheme

Specialized Construction Products Ltd confirms that this minimum level of assurance has been met or exceeded by the following:
BRANZ Appraisal
649

KDC - Approved Building Consent Document - BC210441 - Pg 125 of 512 - 30/08/2021 - ComplyNZ

Technical Statement

Product Description

The EZpanel Cavity System is a cavity-based external wall cladding system for residential and light commercial type buildings where domestic construction techniques are used.

The system consists of autoclaved aerated concrete (AAC) panels (EZpanel panels) fixed over high density polystyrene battens to form a 20 or 40 mm cavity, or timber batten ties to form a 40 mm cavity. The backing substrate is then over coated and reinforced with a range of specially blended proprietary cement-or acrylic-based plasters before the walls are finished with a chosen finishing plaster and painted with a 100% acrylic based paint system. EZpanles can also be boned or mechanically fixed to concrete or masonry walls. (Note: This Application is outside the scope of the BRANZ Appraisal.)

EZpanels are reinforced with a high strength wire mesh making them extremely impact resistant. EZpanels are lightweight, will not rot, are pest resistant and have excellent sound insulation properties.

Specialized's EZpanel System is guaranteed for 15-years from the date of practical completion.

Scope of use

The EZpanel Cavity System is suitable as an external cladding system:

- within the scope limitations of NZBC E2/AS1, Paragraph 1.1; and
- with a risk score of 0-20, calculated in accordance with E2/AS1, Table 2; and
- in NZS 3604 Wind Zones up to and including "Extra High".

The EZpanel Cavity System is also suitable for weathertightness and structural wind loading when used for timber and steel framed buildings subject to specific design up to a design differential ULS wind pressure of 2.5 kPa.

The EZpanel Cavity System must only be installed on vertical surfaces (except for tops of parapets, sills and balustrades, which must have a minimum 10° slope and be waterproofed in accordance with the Technical Literature).

Joinery must meet the requirements of NZS 4211 for the relevant Building Wind Zone or be specifically designed for use in specifically designed buildings.

New Zealand Building Code (NZBC)

The product will, if employed in accordance with the supplier's installation and maintenance requirements, assist with meeting the following provisions of the building code:

- **Clause B1 Structure:** Performance B1.3.1, B1.3.2, B1.3.3, B1.3.4
- **Clause B2 Durability:** Performance B2.3.1(b), B2.3.1(c), B2.3.2
- **Clause E2 External moisture:** Performance E2.3.2
- **Clause F2 Hazardous building materials:** Performance F2.3.1

Notes

B1.3.3 The EZpanel Cavity System meets the requirements for loads arising from (a) self-weight, (f) earthquake, (h) wind, (j) impact loads likely to be encountered in normal residential use, and (q) time dependent effects including creep and shrinkage.

B2.3.1(b) 15 years for the cladding system and plaster finish and (c) 5 years for the exterior paint system

Supporting Evidence

The product has and can make available the following additional evidence to support the above statements:

BRANZ Appraisal
649

Company Contact Details

Specialized CONSTRUCTION PRODUCTS

Company:	Specialized Construction Products Ltd
Physical Address:	79 Porana Road Glenfield NORTH SHORE CITY
Postal Address:	79 Porana Road Glenfield NORTH SHORE CITY
Telephone:	64 09 4144499
Email:	scot@specialized.co.nz
Website:	www.specialized.co.nz

Specialized Construction Products Ltd
EZpanel AAC Panel Cladding System

Product Technical Statement: 101753

KDC - Approved Building Consent Document - BC210441 - Pg 126 of 512 - 30/08/2021 - ComplyNZ

Product Criteria

Design requirements

- Timber framing must comply with NZS 3604 for buildings or parts of buildings within the scope limitations of NZS 3604. Buildings or parts of buildings outside the scope of NZS 3604 must be to a specific design in accordance with NZS 3603 and AS/NZS 1170.
- For steel framing the minimum framing specification is 'C' section studs and nogs of overall section size 75mm web and 32mm flange. Steel thickness must be a minimum of 0.75mm
- All external walls of buildings must have barriers to airflow in the form of interior linings with all joints stopped for wind zones up to and including Very High. Unlined gables and walls must incorporate a rigid sheathing or an air barrier which meets the requirements of NZBC Acceptable Solution E2/AS1, Table 23.

See the EZpanel Specification document for full design requirements

Installation requirements

Installation of components and accessories supplied by Specialized Construction Products Ltd, its certified distributors and certified plasterers must be carried out only by Specialized Construction Products Ltd certified plasterers.

See the EZpanel specification document for full installation requirements

Maintenance requirements

Regular maintenance is essential to ensure the performance requirements of the NZBC are continually met and to ensure the maximum serviceability of the system. Regular cleaning (at least annually) of the paint coating is required to remove grime, dirt and organic growth and to maximise the life and appearance of the coating. Grime may be removed by brushing with a soft brush, warm water and detergent.

Paint systems must be recoated at approximately 5-8 yearly intervals in accordance with the paint manufacturer's instructions. Annual inspections must be made to ensure that all aspects of the cladding system, including the coating system, plasters, flashings and any sealed joints remain in a weatherproof condition. Any cracks, damaged areas or areas showing signs of deterioration which could allow water ingress must be repaired immediately. The EZpanel Cavity System must be repaired in accordance with the instructions of Specialized Construction Products Ltd.

Company Product Information

Environmental

AAC's high resource efficiency gives it low environmental impact in all phases of its life cycle, from processing of raw materials to the disposal of AAC waste on site during construction. In the manufacturing process, no pollutants or toxic by-products are produced.

Relationships

New Zealand Made

Videos

EZpanel video

Date last validated: **05 September 2018**

Date last updated: **05 September 2018**

Disclaimer: The Product Technical Statement (PTS) template is copyright to Construction Information Limited. However the content of this PTS is the responsibility of the product manufacturer/supplier. Refer to the miproducts Terms and Conditions

4323G Gerard Steel Tile Roofing

Gerard Roofs
+64 0800 100244
customerservice@gerardroofs.co.nz
https://gerardroofs.co.nz/

SUPPORTING DOCUMENTS

Gerard Aspen Pressed Steel Roofing 111702

Ref 25384. Uploaded 18 May 2021

Purpose: Installation, Maintenance, Environmental, Warranty

Gerard Roofs Specification Manual

Ref 19676. Uploaded 28 Jan 2021

Purpose: Performance, Installation, Maintenance

Roof Care and Maintenance Guide

Ref 19589. Uploaded 27 Jan 2021

Purpose: Maintenance

KDC - Approved Building Consent Document - BC210441 - Pg 127 of 512 - 30/08/2021 - ComplyNZ

Gerard Aspen Pressed Steel Roofing

Product Technical Statement: 111702

miproducts
THE NATIONAL PRODUCT DATABASE

Inspired by stone slate roofs to gives a sleek look of sophistication
View miproducts listing

masterspec partner

Level of assurance needed to demonstrate NZ Building Code Compliance

H
HIGH

Supporting documentation should include technical information by manufacturer and either a BRANZ or independent Appraisal or CodeMark

Gerard confirms that this minimum level of assurance has been met or exceeded by the following:
New Zealand Metal Roofing Manufacturers Association
MRM

Company Contact Details

GERARD

Company: Gerard Roofs

Physical Address: 90-104 Felton Mathew Avenue
St Johns
AUCKLAND

Postal Address: PO Box 18071
Glen Innes
AUCKLAND

Email: customerservice@gerardroofs.co.nz

Website: https://gerardroofs.co.nz/

Technical Statement

Product Description

Gerard *Aspen* has a simplicity that works with both contemporary and traditional architecture, giving a roof a continuous smooth pattern that can present a flat, almost seamless appearance when seen in soft light like on a cloudy day.

Key features

- Aluminium-zinc steel substrate, made to AS 1397, compliant with NZS 4217 Pressed Metal Tile Roofs.
- Non-combustible - compliant with AS/NZS 1530.3.
- Available in textured finish comprising natural stone-chip coating.
- Available in 19 smooth colours, and 10 textured colours.
- Warranty up to 50 years.

Other performance attributes

- Long lasting in any environment.
- Horizontal fixing system and overlapping, interlocking tile design provides strength, resilience and weather performance when subjected to horizontal wind and seismic forces.
- Lightweight, with a high strength-to-weight ratio.

Scope of use

Gerard Alpine is suitable for use on buildings that comply with NZS 3604.

Code-compliant for the following environmental conditions:

Wind Zone - **Specific Design**

Corrosion Zone - **Corrosion Zone D**

Seismic Zone - **High**

Compatible with Angle trim.

New Zealand Building Code (NZBC)

The product will, if employed in accordance with the supplier's installation and maintenance requirements, assist with meeting the following provisions of the building code:

- **Clause B1 Structure:** Performance B1.3.1, B1.3.2, B1.3.3, B1.3.3(a), B1.3.3(b), B1.3.3(c), B1.3.3(d), B1.3.3(e), B1.3.3(f), B1.3.3(g), B1.3.3(h), B1.3.3(i), B1.3.3(j), B1.3.3(k), B1.3.3(l), B1.3.3(m), B1.3.3(n), B1.3.3(o), B1.3.3(p), B1.3.3(q), B1.3.3(r), B1.3.4, B1.3.4(a), B1.3.4(b), B1.3.4(c), B1.3.4(d), B1.3.4(e), B1.3.5, B1.3.6, B1.3.6(a), B1.3.6(b), B1.3.7, B1.3.7(a), B1.3.7(b), B1.3.7(c)
- **Clause B2 Durability:** Performance B2.3.1, B2.3.1(a), B2.3.1(b), B2.3.1(c), B2.3.2, B2.3.2(a), B2.3.2(b)
- **Clause E1 Surface water:** Performance E1.3.1, E1.3.2, E1.3.3, E1.3.3(a), E1.3.3(b), E1.3.3(c), E1.3.3(d), E1.3.3(e), E1.3.3(f)
- **Clause E2 External moisture:** Performance E2.3.1, E2.3.2, E2.3.3, E2.3.4, E2.3.5, E2.3.6, E2.3.7, E2.3.7(a), E2.3.7(b), E2.3.7(c)

Notes

Statement of Building Code compliance

The system if designed, used, installed and maintained in accordance with supporting technical information and additional conditions and limitations will meet the following provisions of the New Zealand Building Code:

- B1 Structure
- B2 Durability
- E1 Surface Water
- E2 External Moisture

KDC - Approved Building Consent Document - BC210441 - Pg 128 of 512 - 30/08/2021 - ComplyNZ

Gerard Aspen Pressed Steel Roofing

Product Technical Statement: 111702

miproducts
THE NATIONAL PRODUCT DATABASE

*Visit the Gerard Roofs Specification Document Library for all product assurance and technical notes.

Evidence

The product meets the requirements set out in the following documents, or relevant parts of cited standards within the documents:

Visit the Gerard Roofs Document Library to access the following:

Test reports

- Gerard Roofs - Acoustic Test Reports 7071, 72, 73 (University of Canterbury)

Product assurance

- Product Technical Statement (Statement of Building Code compliance B1, B2, E1, E2)
- ISO 9001 Certification (2017)
- ISO 14001 Certification

Technical notes

- Aluminimum Zinc substrate performance
- Batten sizes for non-Cyclonic regions
- E2 external moisture Light resistance & total solar absorption values
- Pipe flashings
- Protection of tile substrate through Gerard Roofs coating
- Severe marine environments
- Sound attenuation of roof claddings and systems
- Valley design
- Wind action resistance
- High Wind Zone environments - Specific Design

Supporting Evidence

The product has and can make available the following additional evidence to support the above statements:

New Zealand Metal Roofing Manufacturers Association
MRM

Product Criteria

Design requirements

Compatible with Gerard Angle trim.

*For more detail please visit Document Library within the Gerard Roofs specification website.

Installation requirements

- Minimum roof pitch 15 degrees.
- System is Code-compliant on the condition it is installed by a licensed applicator / installer.
- Rafters and valley boards are to be correctly installed by the builder before roofing can start (refer to the Builders' Checklist).

*For more detail please visit the Document Library within the Gerard Roofs specification website.

Maintenance requirements

If alterations are made to the home after the installation of the roof - such as fitting of chimneys, extension, installation of skylights etc - it is important to ensure that the materials that are used are compatible with the roofing material.

It is recommended to chemically clean the roof before growths are seen as a preventative maintenance measure.

*For more detail please visit the Document Library within the Gerard Roofs specification website.

Warrantees

Gerard Roofs Warranty

- Up to 50 years - Standard residential environments (more than 750m from breaking surf)
- Up to 25 years - Severely corrosive environments (750m or less from breaking surf)

*For full Warranty details please visit the Document Library within the Gerard Roofs specification website.

Company Product Information

Environmental

ISO 14001.

Recycled and recyclable materials.

KDC - Approved Building Consent Document - BC210441 - Pg 129 of 512 - 30/08/2021 - ComplyNZ

Gerard Aspen Pressed Steel Roofing

Product Technical Statement: 111702

miproducts
THE NATIONAL PRODUCT DATABASE

Feature in one of New Zealand's first "Homestar 10" rated homes.

Quality Assurance

ISO 9001 (Quality Management)

Relationships

Member of New Zealand Green Building Council

New Zealand Made

Date last validated: **18 May 2021**

Date last updated: **18 May 2021**

Disclaimer: The Product Technical Statement (PTS) template is copyright to Construction Information Limited. However the content of this PTS is the responsibility of the product manufacturer/supplier. Refer to the miproducts Terms and Conditions

KDC - Approved Building Consent Document - BC210441 - Pg 130 of 512 - 30/08/2021 - ComplyNZ

GERARD
Roofing Designed to Endure



KDC - Approved Building Consent Document - BC210441 - Pg 131 of 512 - 30/08/2021 - ComplyNZ

New Zealand specification manual

Roofing Designed to Endure

KDC - Approved Building Consent Document - BC210441 - Pg 132 of 512 - 30/08/2021 - ComplyNZ

Contents

Gerard Roofs specification manual

New Zealand's steel roofing system

1.1 Products 5
1.1.1. Gerard Roof profiles 5
Gerard Stratos 6
Gerard Senator 6
Gerard Rockport 7
Gerard Alpine 7
Gerard Oberon 8
Gerard Heritage 8
Gerard Milano 9
Gerard Classic 9
1.1.2. Trims 10
1.2 Finishes 11
1.2.1 Textured finishes 11
1.2.2 Smooth finishes 11
1.2.3 Custom finishes to order 11
1.3 Colours & finishes 12
1.3.1 Textured finish colours 12
1.3.2 Types of finish by roof profile 12
1.3.3 Smooth finish colours 13
1.4 Product warranty 14
1.5 Environmental responsibility 15
1.6 CAD details available 15
1.7 Handling and storage 15
1.8 Product identification 15

2.0 Design considerations

2.1 Scope 18
2.2 Building code 18
2.3 Serviceable life 18
2.4 Other information sources 19
2.5 Alternatives 19
2.6 Materials 19
2.6.1 Panels and accessory materials 19
2.6.2 Installation materials 19
2.7 General information 20
2.7.1. Dissimilar metals/materials 20
Limitations on use 20
2.8.1. Corrosive environments 20

3.0 Substrate & installation overview

3.1 Preparation of structure 22
3.1.1 Rafters and valley boards 22
3.2 Battens 22
3.2.1 Batten setout 22
3.2.2 Batten/rafter fastening 23
3.3 Roofing underlay 23
3.4 Valleys 23
3.5 Solar brackets 23
3.6 Panel installation 23
3.6 Panel installation continued 24

4.0 Standard roof details

4.1 Batten spacing – Eave 26
4.2 Ridge installation 26
4.3 Valleys 28
4.4 Hips 30
4.4.1 Installation of roof trim on hip junction with wooden battens 30
4.5 Barge/Gable ends 31
4.5.1 Installation of roof trim over a wooden fascia with batten 31
4.5.2 Installation of roof trim over a metal fascia with and without batten 31
Wall flashings 32
4.6.1 Side flashings 32
4.6.2 Step - Pitch flashings 32
4.6.3 Soft edge apron flashings 33
4.7 Wall Stop Ends 33
4.8 Change in pitch 34
4.9 Penetrations 35
4.9.1 Pipes 35
4.9.2 Chimneys 35
4.9.3 Roof windows 35
4.9.4 Solar panels 35
4.10 Extra high wind zone installation 36

5.0 Components & fixing patterns

5.1 Gerard Roofs components 38
5.2 Gerard Stratos installation 40
5.3 Gerard Senator installation 41
5.4 Gerard Rockport installation 42
5.5 Gerard Alpine installation 43
5.6 Gerard Oberon installation 44
5.7 Gerard Heritage installation 45
5.8 Gerard Milano installation 46
5.9 Gerard Classic installation 47

KDC - Approved Building Consent Document - BC210441 - Pg 133 of 512 - 30/08/2021 - ComplyNZ

New Zealand's ingenious pressed steel roofing system

A Gerard roof is made up of individual lightweight pressed steel panels secured using a unique fixing system that effectively locks them together to form a single structural unit. The result is a roof that's stylish, copes with severe weather and lasts a very long time.

Invented in New Zealand ...

In 1957 New Zealand innovator Lou Fisher saw an opportunity to create a new kind of roof.

Disappointed with the limitations of solid tile and the utilitarian look of long-run corrugated iron roofs, he invented the steel tile roof and established a trusted brand that would grow to become Gerard Roofs.

... proven all over the world

The company continues to lead through ongoing product development and relentless attention to quality standards. Over the years Gerard Roofs' products have been fine-tuned to endure in all living situations and are now used in over 120 countries.

The Gerard roof you put over your head has not only been proven throughout New Zealand, but in some of the most extreme climates and environments on the planet

1.1 Products

1.1.1. Gerard Roof profiles

The roof has profound effect on the look of most homes

An attractive roof is a significant architectural feature. The roof usually accounts for around a third of the overall visual appearance of a home and will have a noticeable influence on its style and street appeal.

Gerard Roofs' profiles complement a range of styles

For many people, choosing a roof is primarily about looks. Homes are a reflection of individuality and their roofs a prominent feature. Unlike most other roofing types Gerard offers a system of choices that enables you to determine the right 'look' rather than having to accept a pre-defined one.

Applicable to traditional or contemporary architecture

Whether you're imagining traditional style or something following the latest trends, Gerard Roofs have profiles to meet the brief. Milano, for example, is reminiscent of the enduring ridged roofs of the Mediterranean; by contrast, a profile like Rockport offers a slimmer, squarer more contemporary pattern.


Gerard Rockport


Gerard Stratos


Gerard Senator


Gerard Alpine


Gerard Classic


Gerard Milano


Gerard Oberon


Gerard Heritage

KDC - Approved Building Consent Document - BC210441 - Pg 134 of 512 - 30/08/2021 - ComplyNZ

Gerard Stratos

Combining a flat plane with continuous but irregular grooves gives Gerard Stratos a recurring but slightly organic pattern that works with many styles of home.

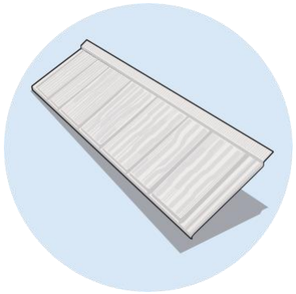



Pitch – min./max.	15-90°
Overall length	1320 mm
Length of cover	1250 mm
Width of cover	370 mm
Upstand	27 mm
Roof cover/panel	0.46 m^2
Panels/m^2	2.2
Weight/panel Textured	3.0 kg
Weight/panel Smooth	2.1 kg
Weight/m^2 Textured	6.6 kg
Weight/m^2 Smooth	4.7 kg

Gerard Stratos is compatible with all three Gerard trims – **Barrel, Angle** and **Box**.

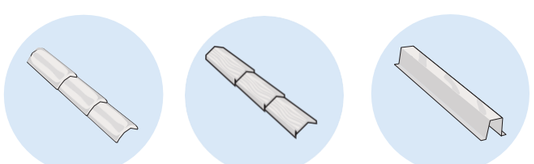

Dimensions and weights given are nominal.

Gerard Senator

A profile with a modern look and subtle raised detailing. Senator is known for the simplicity and uniformity it brings to contemporary and traditional homes.

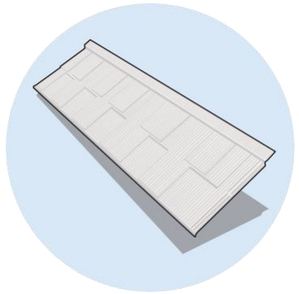



Pitch – min./max.	15-90°
Overall length	1320 mm
Length of cover	1250 mm
Width of cover	368 mm
Upstand	16 mm
Roof cover/panel	0.46 m2
Panels/m^2	2.2
Weight/panel Textured	3.0 kg
Weight/panel Smooth	NA
Weight/m^2 Textured	6.6 kg
Weight/m^2 Smooth	NA

Gerard Senator is compatible with **Angle** trim.

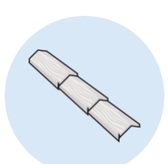

Products and specifications

Gerard Rockport

Among Gerard's flattest profiles, Rockport lends your roof a sleek, linear look and is often used on clean, simple architecture with a modern bias.

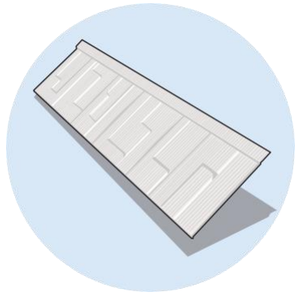



Pitch – min./max.	15-90°
Overall length	1330 mm
Length of cover	1250 mm
Width of cover	368 mm
Upstand	20 mm
Roof cover/panel	0.46 m^2
Panels/m^2	2.2
Weight/panel Textured	3.0 kg
Weight/panel Smooth	NA
Weight/m^2 Textured	6.6 kg
Weight/m^2 Smooth	NA

Gerard Rockport is compatible with **Angle** trim.

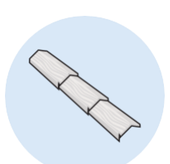

Gerard Alpine

Inspired by the look of Welsh slate the Gerard Alpine profile lends a smooth, sleek linear look while surface detailing adds a slightly rustic overtone.

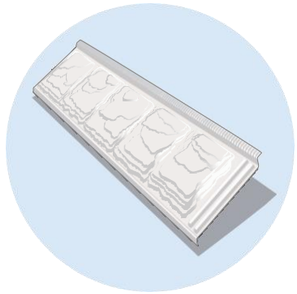



Pitch – min./max.	15-90°
Overall length	1335 mm
Length of cover	1260 mm
Width of cover	368 mm
Upstand	17 mm
Roof cover/panel	0.46 m^2
Panels/m^2	2.2
Weight/panel Textured	2.9 kg
Weight/panel Smooth	NA
Weight/m^2 Textured	6.4 kg
Weight/m^2 Smooth	NA

Gerard Alpine is compatible with **Angle** trim.

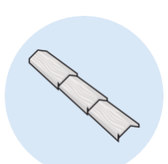

Dimensions and weights given are nominal.

KDC - Approved Building Consent Document - BC210441 - Pg 135 of 512 - 30/08/2021 - ComplyNZ

Gerard Oberon

The depth and dimension of Oberon make it most responsive to changes in light. It is often seen on substantial homes alongside dressed stone and natural timbers.

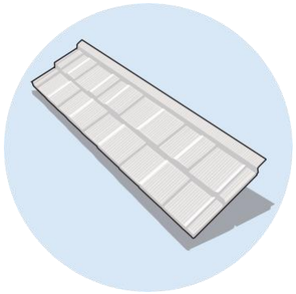



Pitch – min./max.	20-90°
Overall length	1310 mm
Length of cover	1230 mm
Width of cover	320 mm
Upstand	20 mm
Roof cover/panel	0.39 m^2
Panels/m^2	2.54
Weight/panel Textured	2.8 kg
Weight/panel Smooth	NA
Weight/m^2 Textured	7.1 kg
Weight/m^2 Smooth	NA

Gerard Oberon is compatible with **Angle** trim.

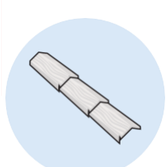

Gerard Heritage

The scalloped shapes of this profile bring a look that's similar to heavyweight tiles. The advantages of pressed steel mean this profile is often chosen as a substitute.

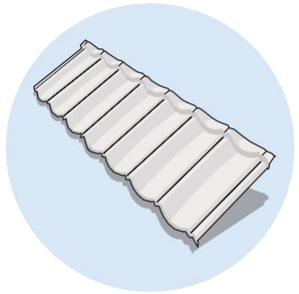



Pitch – min./max.	12-90°
Overall length	1330 mm
Length of cover	1257 mm
Width of cover	369 mm
Upstand	28 mm
Roof cover/panel	0.46 m^2
Panels/m^2	2.2
Weight/panel Textured	2.9 kg
Weight/panel Smooth	2.1 kg
Weight/m^2 Textured	6.4 kg
Weight/m^2 Smooth	4.7 kg

Gerard Heritage is compatible with all three Gerard trims – **Barrel, Angle** and **Box**.

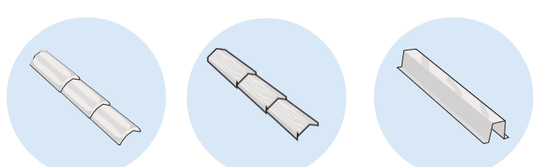

Dimensions and weights given are nominal.

Products and specifications

Gerard Milano

With balanced arches and flats found in traditional design, Gerard Milano is a timeless profile that creates clean, elegant and classical looking roofs.

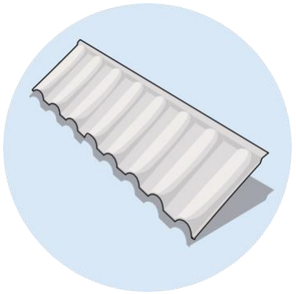



Pitch – min./max.	12-90°
Overall length	1330 mm
Length of cover	1215 mm
Width of cover	368 mm
Upstand	24 mm
Roof cover/panel	0.45 m^2
Panels/m^2	2.2
Weight/panel Textured	2.9 kg
Weight/panel Smooth	NA
Weight/m^2 Textured	6.4 kg
Weight/m^2 Smooth	NA

Gerard Milano is compatible with **Barrel** and **Angle** trims.

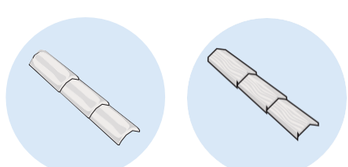

Gerard Classic

Gerard Classic is a geometric profile with shapes and angles that accentuate light and shadow to emphasise its corrugations and create a look of strength and definition.

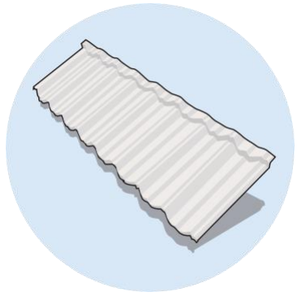



Pitch – min /max.	12-90°
Overall length	1320 mm
Length of cover	1257 mm
Width of cover	369 mm
Upstand	28 mm
Roof cover/panel	0.46 m^2
Panels/m^2	2.2
Weight/panel Textured	2.9 kg
Weight/panel Smooth	2.1 kg
Weight/m^2 Textured	6.4 kg
Weight/m^2 Smooth	4.7 kg

Gerard Classic is compatible with all three Gerard trims – **Barrel, Angle** and **Box**.

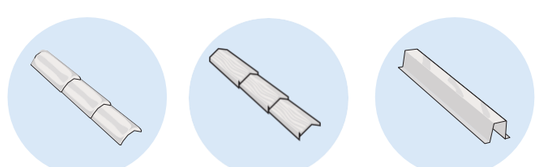

Dimensions and weights given are nominal.

KDC - Approved Building Consent Document - BC210441 - Pg 136 of 512 - 30/08/2021 - ComplyNZ

1.1.2. Trims

Gerard Roof trims

Trim is an essential roofing element, for performance as well as appearance; roof trims create a weatherproof seal at roof junctions and are an important part of the integrity of the roofing system.

There are three types of roof trim – Angle, Barrel and Box. Each roof profile is compatible with one or more of these as shown in the chart on the right.

Gerard's roof trim component system is designed to be fully integrated. The finish of Gerard trims can be chosen to exactly match the finish of a Gerard roof or chosen in a contrasting colour to create a specific effect.

	Angle trim	Barrel trim	Box trim
Stratos	✓	✓	✓
Senator	✓		
Rockport	✓		
Alpine	✓		
Oberon	✓		
Heritage	✓	✓	✓
Milano	✓	✓	
Classic	✓	✓	✓

Gerard Roof Profiles With Corresponding Trims



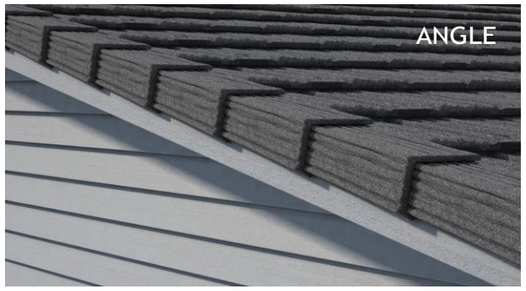



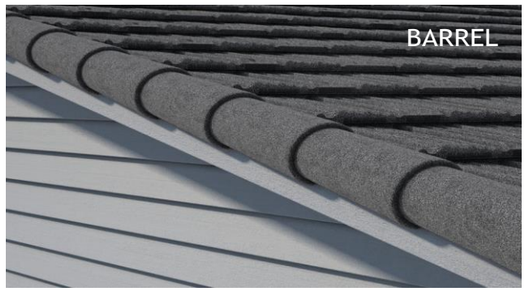



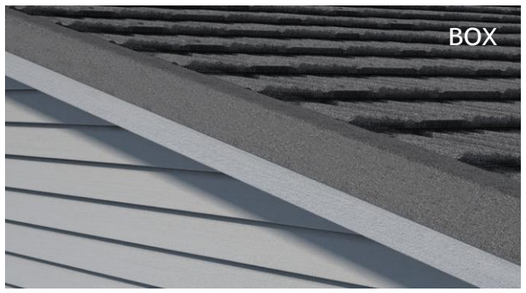

1.2 Finishes

Choice of surface finishes

Some Gerard roof profiles allow you to choose either a textured or Smooth finish on the surface of your roof.
Both have their merits and both come in a range of contemporary colours. The decision is usually influenced most by the architectural style of the home and the intended colour scheme.

1.2.1 Textured finishes

Naturally coloured mineral fragments, or ceramic coated stone fragments, fused to aluminium-zinc steel in layers of acrylic resin and over-glaze.

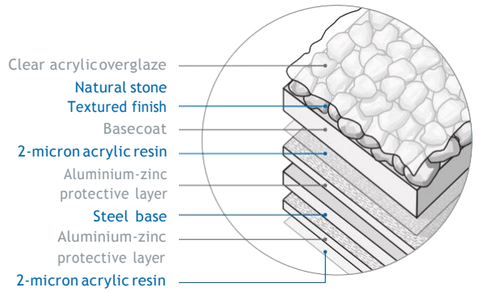

Textured finish advantages:

- Additional protection from the elements
- Natural stone colours are almost entirely fade-free
- Gerard textured finishes have longer warranty

A textured stone finish is inclined to look a little more substantial yet visually softer than a Smooth finish.

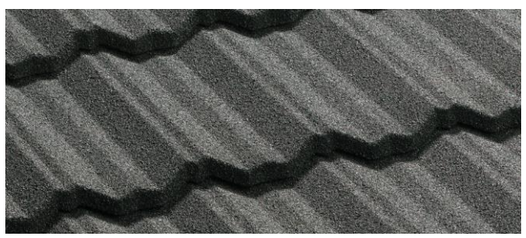

1.2.2 Smooth finishes

45-micron thick topcoat of ultra-tough polymer acrylic applied after the shape has been pressed into the aluminium-zinc steel (preventing surface micro-cracks).

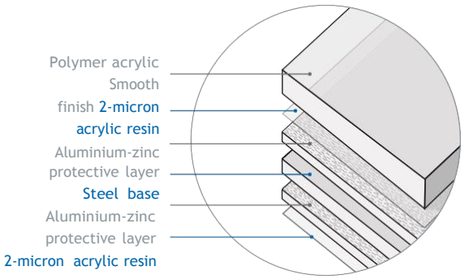

Smooth finish advantages:

- Less expensive than a textured finish
- Smooth surface with clearer detail
- Just like ordinary coloured steel but much more durable

Smooth finishes tend to produce a smoother, crisper look accentuating patterns and details more.

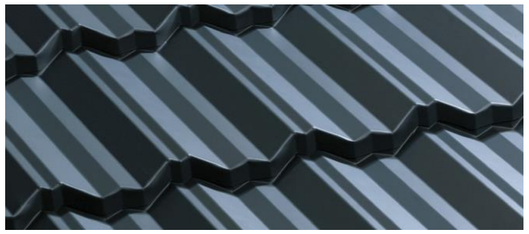

1.2.3 Custom finishes to order

Custom finishes can be created for special projects by request.

A Gerard Smooth finish can be made to match any colour sample. We also have the ability to develop a custom textured finish – for example, we could work with stone that's native to your location.

To find out more contact Gerard Roofs on 0800 100 244.

KDC - Approved Building Consent Document - BC210441 - Pg 137 of 512 - 30/08/2021 - ComplyNZ

1.3 Colours & finishes

1.3.1 Textured finish colours



Midnight

Black / Ebony



Charcoal

Black / Ebony

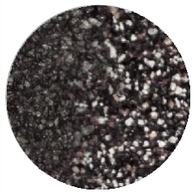

Eclipse

Black / Ebony



Onyx

Greyfriars / Greyfriars



Ashwood

Sandstone Grey / Sandstone Grey



Rainforest

Karaka / Karaka

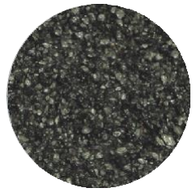

Greenstone

Karaka or River Gum / Karaka



Ravine

Karaka / Karaka



Teak

Lignite / Lignite



Pepper

Ironsand / Ironsand



Terracotta

Scoria / Scoria



Cedar

Lignite or Scoria / Lignite

1.3.2 Types of finish by roof profile

Textured finishes and colours are available for all Gerard roof profiles.



Gerard Alpine

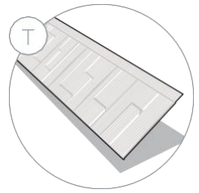

Gerard Rockport

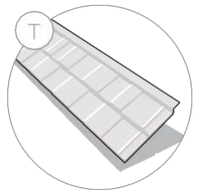

Gerard Oberon

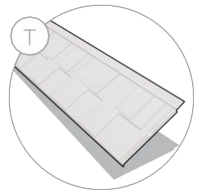

Gerard Senator

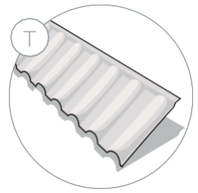

Gerard Milano

The name below each colour swatch title is the Colorcote® / Colorsteel® equivalent.
These are useful for matching accessories like fascia or aluminium joinery
as the names are often referred to as a colour standard.

Products and specifications

Smooth finishes and colours are available for the three Gerard profiles shown below.



Gerard Classic



Gerard Stratos

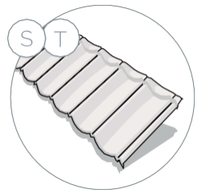

Gerard Heritage

1.3.3 Smooth finish colours

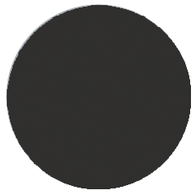

Obsidian

Black / Ebony

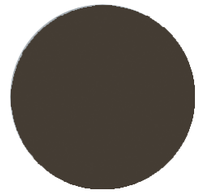

Graphite

Ironsand / Ironsand

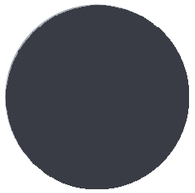

Castle Grey

Windsor Grey / Windsor Grey

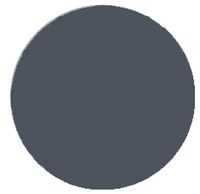

Ocean Blue

New Denim Blue / New Denim Blue

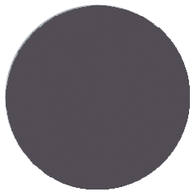

Smoke Grey

Greyfriars / Greyfriars

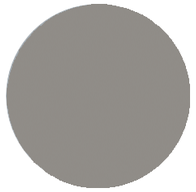

Pearl Grey

Sandstone Grey / Sandstone Grey



Chalk

Cloud / Pacific Cloud

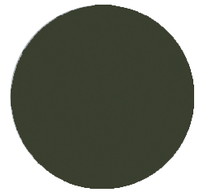

Dark Green

Karaka / Karaka

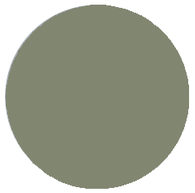

Mint Green

Mist Green / Mist Green

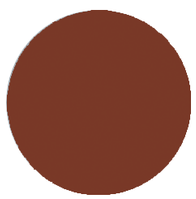

Russet

Scoria / Scoria

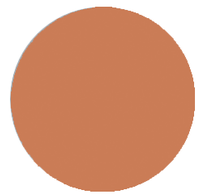

Marseille Clay

Terracotta / Terracotta

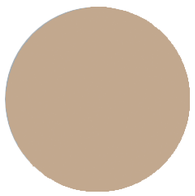

Morocco

Beige / *No equivalent*

The name below each colour swatch title is the Colorcote® / Colorsteel®equivalent.
These are useful for matching accessories like fascia or aluminium joinery
as the names are often referred to as a colour standard.

KDC - Approved Building Consent Document - BC210441 - Pg 138 of 512 - 30/08/2021 - ComplyNZ

1.4 Product warranty

Gerard's warranty addresses homeowners' two main concerns:

1. That the roof remains weatherproof
2. That the coating remains sound

Complicated rules simplified

Warranties are complex but we've narrowed the variables affecting Gerard Roofs' warranty cover down to two questions:

Is the building sited in a corrosive environment?

Does the roof have a Smooth or a textured finish?

On the right is a chart showing the terms of the warranty according to the circumstances of the individual building.

In each situation the warranty is pro-rata with cover diminishing over time.

There are two warranty environment zones: Standard and Corrosive. Warranty cover is longer in the standard environment zone.

A Corrosive Environment is defined as anywhere within 750m of breaking surf.

Gerard Roofs' warranty applies to all Gerard manufactured products, even if installed in extreme corrosive conditions.

Installation is assured

Be reassured that Gerard roofs are only installed by Gerard Certified Roofers.

Each GCR is responsible under law to make good any problems in the unlikely event they arise.

Visit www.gerardroofs.co.nz to download a sample of the full warranty document.

The chart shows the duration of both aspects of roof cover, according to the type of texture and the corrosiveness of the environment.





Weatherproofing		
Weatherproofing cover with textured finish roof	50 years pro-rata	25 years pro-rata
Weatherproofing cover with Smooth finish roof	50 years pro-rata	15 years pro-rata
Surface coating		
Textured Coating cover	20 years pro-rata	10 years pro-rata
Smooth Coating cover	15 years pro-rata	5 years pro-rata

1.5 Environmental responsibility

A Gerard pressed steel roof is an environmentally responsible choice.

Pressed steel roofing generates minimal manufacturing, construction site and demolition waste.

A pressed steel roof is lighter than its concrete or clay equivalent, which means transportation is more energy-efficient. It requires less framing support, which also saves resources. Steel is endlessly recyclable too.

Gerard Roofs is conscious of its environmental footprint and was New Zealand's first roofing manufacturer to be awarded ISO 14001 environmental accreditation.

TELARC REGISTERED
Environment ISO 14001

1.6 CAD details available

CAD details for commonly encountered roof details in a number of common formats can be found at www.gerardroofs.co.nz/designtech

At the time of publication these details cover:

- Eaves
- Gables
- Ridges
- Roof-to-wall (transverse)
- Hips
- Roof-to-wall (parallel)
- Valleys

Gerard Roofs' CAD library is an expanding online resource that will be added to periodically as new details become available.
Check www.gerardroofs.co.nz/designtech to see the latest available versions.

Specific details for unusual or challenging areas can be requested by contacting Gerard Roofs on 0800 100 244.

1.7 Handling and storage

Gerard panels and accessories must be transported and handled with care to avoid damaging the pre-finished surfaces.

Long term storage of panels and accessories must be under dry, ventilated cover. For short term storage on site, panels and accessories must be stored flat off the ground, no more than two pallets high.

Handling and storage of all materials supplied by Gerard Roofs, whether on or off site, is under the control of the Gerard Certified Roofer.

Other materials must be handled and stored in accordance with the relevant manufacturer's instructions.

1.8 Product identification

Gerard Roofs print a run number, date and time of production on the reverse side of each panel. Pallets have pallet cards that show the run number, date of production and colour code markings; this allows identification of batch colours.

The steel supplier also prints a code which allows identification of the parent coil.



Reverse side of the panel.

KDC - Approved Building Consent Document - BC210441 - Pg 139 of 512 - 30/08/2021 - ComplyNZ

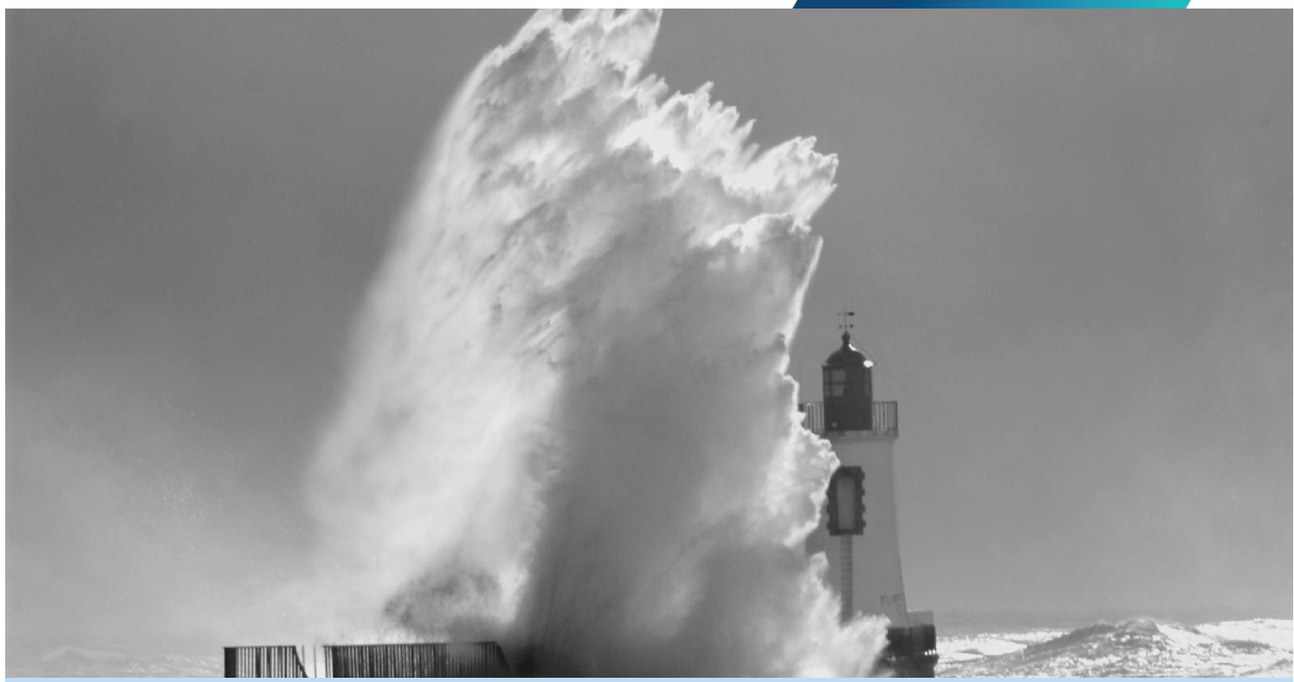

2.0 Design considerations

This section contains general information you need to keep in mind when designing buildings with Gerard Roofs. The numbered sections (2.1; 2.2; etc.) correspond to the equivalent parts of the Gerard Roofs website specification area (www.gerardroofs.co.nz/designtech). Any details and diagrams can be downloaded from there.

KDC - Approved Building Consent Document - BC210441 - Pg 140 of 512 - 30/08/2021 - ComplyNZ

2.1 Scope

This specification covers the supply and fixing of:

- Materials
- General information
- Limitations of use
- Service of life
- Workmanship - pre-roofing requirements
- Timber battens.
- Roofing underlay
- Valleys
- Gerard Roofs - pressed metal tiles/panels
- Trim, standard, barrel and angle
- Wall flashings
- Fixings/fasteners
- Incompatible materials
- Extra high wind zone variations
- Solar panels

2.2 Building code

The following standard specifications should be adhered to in both materials and workmanship.

NZS 2295	Roofing underlays
NZS 4217	Standard for pressed metal tile roofs
NZS 3604:2011	Code of practice for light timber framed buildings, not requiring specific design
AS/NZS 4680	Hot-dip galvanized (zinc) coatings on fabricated ferrous articles - galvanising of nails
E2/AS1	New Zealand Building Code clause E2 External moisture
AS1397:2011	AS 1397-2011 continuous hot-dip metallic coated steel sheet and strip - coatings of zinc and zinc alloyed with aluminium and magnesium.
AS/NZS 1530	pt. 3:1999. Fire standard

NZ Building Code sections B1,B2,E2, G12

2.3 Serviceable life

Durability (B2)

Without recoating, the Gerard Roofs products will meet the provisions of NZBC B2.3(C) for 15 years, when used and maintained.

Structure (B1)

When installed according to the manufacturers recommendations the Gerard Roofs products will allow provisions of NZBC B1.3.1, B1.3.2 and B1.3.4 to be met for the relevant provisions of B1.3.3.

External moisture (E2)

When correctly used and installed, the Gerard products meet the requirements of the NZ Building Code E2/AS1

Live loads

During installation and subsequent construction process or maintenance, walking load must be positioned to the front of the panel where the panel is supported by a batten.

Wind zones

On new roofs when fixed to battens sized and installed according to NZS 3604:2011 Gerard Roofs systems are suitable for use in all NZS 3604:2011 building wind zones up to and including extra high.

Spread of fire (C3)

The coating of the roof is <1mm thickness and applied directly to a non-combustible substrate. There was no spread of flames when tested to AS/NZ 1530.pt3.

Water supplies (G12)

Rainwater collected from the Gerard Roofs systems will meet the provisions of NZBC G12.3.1, providing the surface coating is maintained as directed.

It is recommended that a potable water collection system is not installed until 3 good rainfalls have washed the new roof surface free of building debris and surface coating surfactants.

Snow

The Gerard Roofs products are suitable for use where buildings are designed for a 1kPa snow loading.

2.4 Other information sources

NZ MRM Code of Practice.

2.5 Alternatives

No alternatives or substitutions permitted.

2.6 Materials

2.6.1 Panels and accessory materials

The roofing panels and accessories are made by Gerard Roofs.

The base material is aluminium-zinc coated steel - 0.39 mm, AZ150 of AS1397:2011.

Panels are finished in either a granulated textured or Smooth paint finish.

Submissions

An actual product sample should be sighted to confirm colour choice before material orders are placed/accepted.

2.6.2 Installation materials

1. Roofing underlay shall be either a bitumen impregnated Kraft or synthetic underlay. Kraft underlays are covered by NZS2295 while synthetic roofing underlays are approved by Acceptable Solution documentation from the suppliers.
2. Battens of rough sawn radiata pine type timber meeting suitable dimensions (table 02, page 22) with H1.2 protection.
3. Ridge, hip, gable and wall flashings shall be supplied as standard products from Gerard Roofs.
4. Valleys may be used as supplied pre-finished in 2.4 metre lengths by Gerard Roofs or made to order out of pre-painted 0.55 mm G300 AZ150 aluminium-zinc coated steel in a matching colour from a sheet metal fabricator. If made to order, valleys should have similar dimensions to those supplied by Gerard Roofs.
5. Valleys must be painted to the same colour as the roof panel if not pre-finished.
6. Hip end caps to be installed where necessary to stop ingress of moisture or bird-life.
7. All nails in panels should be 50 mm galvanised and coated to meet AS/NZS 4680 specification (Zn 390 g/m^2). Galvanised nails are used for ridge hip caps 30 mm, all other trim or flashings 50 mm.

KDC - Approved Building Consent Document - BC210441 - Pg 141 of 512 - 30/08/2021 - ComplyNZ

2.7 General information

Profile	Minimum pitch
Stratos	15°
Senator	15°
Rockport	15°
Alpine	15°
Oberon	20°
Heritage	12°
Milano	12°
Classic	12°

Minimum Roof Pitches For Gerard Roof Profiles

For full specifications - refer to individual panel profile data (pages 6-9) dimensions, coverage, weights etc.

2.7.1. Dissimilar metals/materials

When two different metals are in contact and moisture is present, one metal is relatively protected while the other suffers accelerated corrosion. A similar effect often occurs with water flowing over different metals.

This form of corrosion is commonly found:

- Where water is discharged from copper or brass systems over a galvanised or aluminium-zinc coated steel roof.
- Where unpainted lead flashings are applied directly to aluminium-zinc coated steel products.
- Where fasteners are incompatible with the roofing material.
- Any electrical contact between dissimilar metals should be avoided, e.g. wet leaves making contact between copper gutters and aluminium-zinc coated steel roof panels.

Note: Special consideration should be given when replacing existing roofs as some roof claddings use unsuitable materials for flashing such as lead.

2.8 Limitations on use

2.8.1. Corrosive environments

The Gerard system must not be used in high alkaline environments (such as intensive animal shelters or other buildings with high ammonia concentrations); contact with fresh concrete or plaster must be avoided. The roofing must not be used in contact with permanently damp materials, nor on or near industrial buildings in which corrosive processes occur, nor over swimming pools.

Directing water-flow to minimise potential corrosion



This chart lists commonly used metals in a 'Galvanic Series'. If any two of these metals are in damp contact or a run-off situation, the metal further to the left will sacrifice itself to protect the metal further to the right. Therefore the simple rule to remember is that you can run water from left to right, but not from right to left. For example zinc to copper is alright, but copper to zinc is not. Specific advice should be sought from Gerard Roofs regarding use of dissimilar metals.



3.0 Substrate & installation overview

Information for the design and specification of the sub-structure of a Gerard roof; rafters, battens, underlays and fixings are covered in detail. The numbered points (3.1; 3.2; etc.) correspond to the equivalent parts of the Gerard Roofs website specification area (www.gerardroofs.co.nz/designtech). Any details and diagrams can be downloaded from there.

KDC - Approved Building Consent Document - BC210441 - Pg 142 of 512 - 30/08/2021 - ComplyNZ

3.1 Preparation of structure

3.1.1 Rafters and valley boards

Rafters and valley boards are to be correctly installed by the builder before roofing can start.

Refer to Gerard Roofs Technical Note - Builder Check List, on the Gerard Roofs website.

Where an exact number of complete panel courses is not possible, the top row of panels should be trimmed to fit and then bent up beneath the ridge flashing.

3.2 Battens

Select batten size to suit rafter or truss spacing. Battens are to be treated to H1.2 and graded on site.

Truss spacing (mm)	Batten size (mm)	Situation
900	40 x 50	Standard
1200	50 x 50	Occasional
1500	50 x 65 on edge	Unusual
1800	50 x 75 on edge	Unusual

Table 02 Batten/Spacing

3.2.1 Batten setout

Stratos, Heritage, Classic, Milano, Rockport and Alpine profiles

A row of battens fixed directly behind the fascia with the second batten 330mm up the truss. Subsequent battens are spaced at 370mm (or as specified for profile and coating finish). The final, top row of panels is 365mm or less, depending on whether the top row needs cutting due to rafter length.

Senator

A row of battens fixed directly behind the fascia with the second batten 330mm up the truss. Subsequent battens are spaced at 368mm. A centre support batten (40x50 mm) positioned 185 mm behind the front face of the panel batten is installed and held in place with a single batten nail. Panels are not fastened to this support batten. The final top row of panels should be 365mm or less, depending on whether the top row needs cutting due to rafter length.

NB. The second batten up from the facia is left out to allow the roofing underlay to maintain an angle above horizontal.

Oberon

A row of battens fixed directly behind the facia with the second batten 280 mm up the truss. Subsequent battens are spaced at 160mm. The final top row of panels is 155mm or less, depending on whether the top row needs cutting due to rafter length. Panels are not fastened to intermediate support battens.

NB. The second batten up from the facia is left out to allow the roofing underlay to maintain an angle above horizontal.

Eaves panels at gutter fascia

Panels should extend into the gutter by 40mm. This may vary slightly depending on the rafter length and roof pitch.

Roof profile	Batten spacing	
	Textured	*Smooth*
Stratos	370mm	371mm
Senator*	368mm	
Rockport	368mm	
Alpine	368mm	
Oberon^	320mm	
Heritage	369mm	370mm
Milano	368mm	
Classic	369mm	370mm

Table 03 Batten Set-Out

**Centre batten 185 mm, second batten from eave not installed*
^Centre batten 160 mm, second batten from eave not installed

3.2.2 Batten/rafter fastening

Gerard Roofs require that all 40 x 50 mm battens fastened to rafters at 900 mm centres are to be fastened with 2 x 90 mm gun nails in all wind zones up to and including the very high wind zone.

In extra high wind zones a screw fastener must be used for all batten rafter junctions.

This meets or exceeds the requirements of NZS3604:2011

Wind zone	900 rafter 50x40 mm	1200 rafter 50x50 mm
Low 32m/s	S	S
Medium 37m/s	S	S
High 44m/s	S	T
Very high 50m/s	S	T
Extra high 55m/s	T	T
SED +55m/s*	Contact GR	Contact GR

Table 04 Fasteners for Panel Battens -Wind Zones – NZS3604.

S = 2 x 90 mm x 3.15 mm nails (0.8kN)
T = 80 mm x 10g screw (2.4kN)

**In SED Specific design situations refer to Gerard Roofs Technical Notes on installation in SED wind areas.*

3.3 Roofing underlay

Must comply with standard NZS 2295 - Pliable and Permeable Building Underlays. Roofing underlay is installed under the battens but over the bottom batten.

Roofing underlay should be installed horizontally with a minimum overlap of 75 mm.

All vertical laps to be taken past rafters and lap by a minimum of 150 mm.

The Roofing underlay is self-supporting up to 1200 mm and does not need mesh.

3.4 Valleys

Valley trays should be made from 0.55 mm AZ150 coated steel. Typically the steel will be pre-painted. Install valleys in a weatherproof workmanlike manner. Do not fix through valleys. Where more than one valley length is used in one run, have an overlap of at least 150mm. Tag valleys at the top edge of the valley join to eliminate valley creep.

3.5 Solar brackets

Gerard Roofs have proprietary solar brackets which can be installed at the time of roofing or later. These brackets do not require holes to be cut into the surface of the panels offering complete weather security.

Refer to Gerard Roofs for more information.

3.6 Panel installation

Care must be taken when handling, cutting, bending and installing to avoid damage to the surface. In particular, the paint finish must be kept clean.

Use rubber soled work shoes during installation and protective/synthetic padding on bending equipment.

Where work is still to be carried out on upper storey dormer windows or walls, panels can be left off to avoid damage or fallout from paint or plaster coatings. Alternatively, a plank embedded into 3 sand bags along its length can be used on top of the panel, with the sand bags placed over the support batten near the nose of the panel.

Where work is progressing above installed panels, dust sheets must be used held down with sand bags.

KDC - Approved Building Consent Document - BC210441 - Pg 143 of 512 - 30/08/2021 - ComplyNZ

3.6 Panel installation continued

Heritage, Classic and Milano

Heritage, Classic and Milano can be installed to a minimum of 12° and may be laid left to right or right to left. All laps to be the same way on each plane.

Stratos

Stratos can be installed to a minimum of 15° and may be laid left to right or right to left. The laps must be laid facing away from prevailing winds or line of vision. All laps should be the same way on each plane. Courses must be staggered in a random pattern to avoid patterning as you progress up a hip, or gable.

Senator, Alpine and Rockport

Senator, Alpine and Rockport can be installed to a minimum of 15°. These profiles may only be laid in a single direction, as follows:

- Senator and Alpine – left to right only
- Rockport – right to left only

Courses of all three should be laid in a random pattern, with staggered start points.

Senator should be installed with an intermediate batten at 185mm to support roof traffic.

Oberon

Oberon can be installed at a minimum of 20° and should be laid right to left. Reference can be made to the individual profile fixing pattern pages at the back of this specification manual. Courses must be staggered in a random pattern for Oberon, to avoid patterning as you progress up a hip or gable.

Eaves

At eaves, the front rows of panels are fixed to the battens alongside the fascia by driving nails through the top face into the eave batten. These nails are positioned at points of low water run off. Eaves nails for Smooth finish have a synthetic washer installed under the nail head, eaves nails on textured finishes are sealed with the touch up kit basecoat and chip.

Nailing panels

Successive rows of panels are fixed by driving 50mm nails through the centre of the panel nose into the face of the battens. These nails are spaced as shown/ described in the individual profile fixing pattern pages at the back of this specification manual.

Only Gerard Roofs approved nails should be used in the installation of panels and accessories.

Valleys

Panels are cut at the same angle as the valley, at appropriate points, and bent down into the valley; they must not touch the valley tray. At the ridge, panels are cut and bent up under ridge accessories.

Ridge, Hip, Gable and Wall flashings

Only factory produced flashings and trim as supplied by Gerard Roofs may be installed. Panels are turned up by a minimum of 40 mm and covered by Gerard Roofs accessories to the prescribed coverage. Special flashings can be formed and coated to order.

Wall roof lower junctions

Gerard roofs have proprietary PVC stop end flashings that direct roof/wall run off water into the rain water gutter system.

Membrane areas

If flat membrane areas such as Butynol overlap onto product surfaces, these can be painted with the touch up kit or base coated and granite textured.

Weather sealing

Proprietary or custom made rubber or metal flashings require neutral-cure silicone or MS sealants acceptable to Gerard Roofs to be used for weather-sealing services penetrating the roof. Sealant shall be applied between the flashing and panel surface and mechanical fasteners (rivets, Tek screws) installed to permanently fix the flashing in place.

GERARD
Roofing Designed to Endure

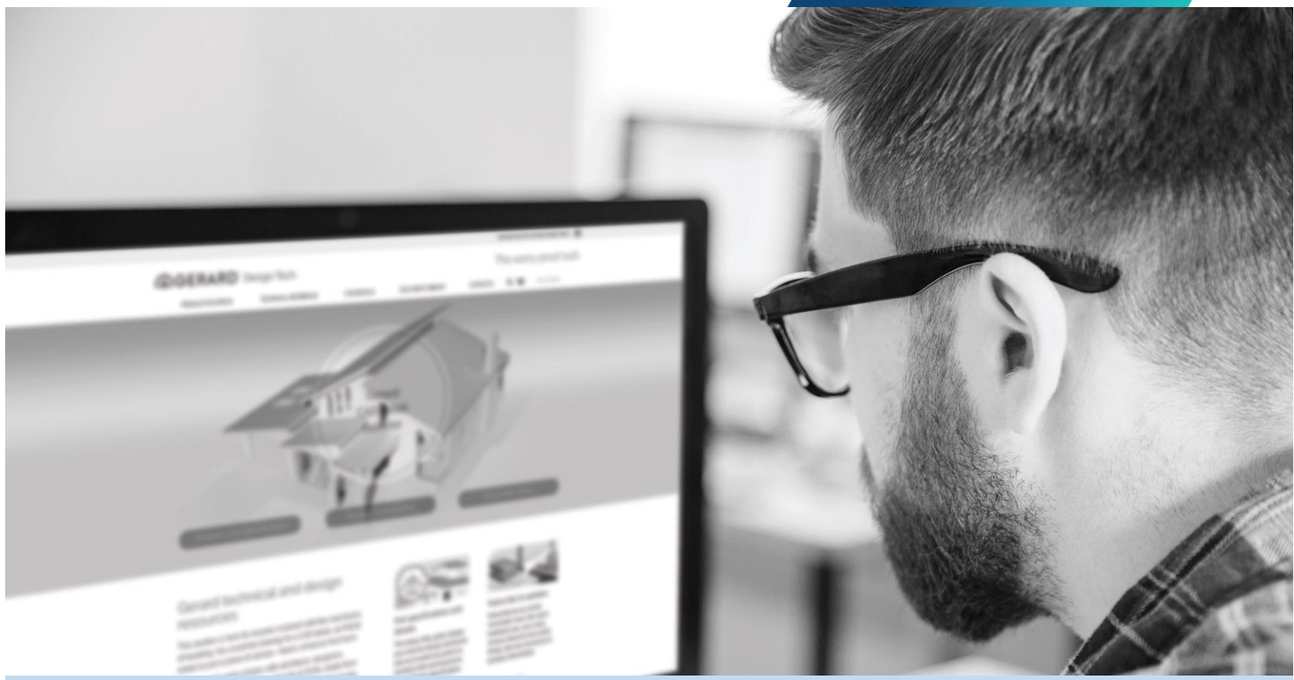

4.0 Standard roof details

This section contains the common junction details and information you need to design and specify buildings with Gerard Roofs. The numbered sections (4.1; 4.2; etc.) correspond to the equivalent parts of the Gerard Roofs website specification area (www.gerardroofs.co.nz/designtech). Any details and diagrams can be downloaded from there.

KDC - Approved Building Consent Document - BC210441 - Pg 144 of 512 - 30/08/2021 - ComplyNZ

4.1 Batten spacing – Eave

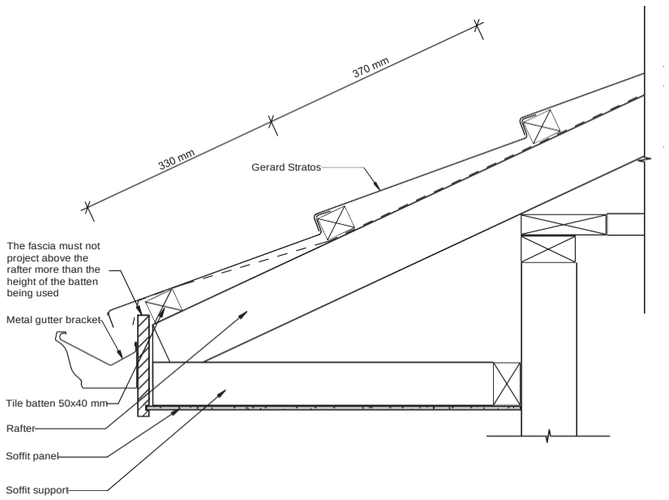

Fig 001 - Gerard Eave

4.2 Ridge installation

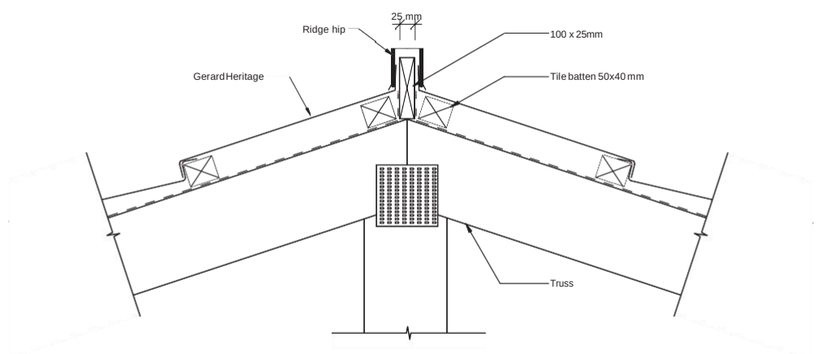

Fig 002 - Gerard Box Trim Ridge Board/Batten - Truss

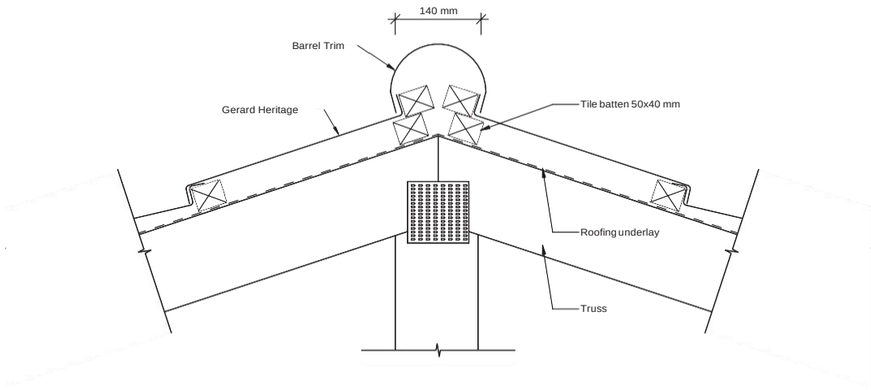

Fig 003 - Gerard Barrel Trim Ridge Board/Batten - Truss

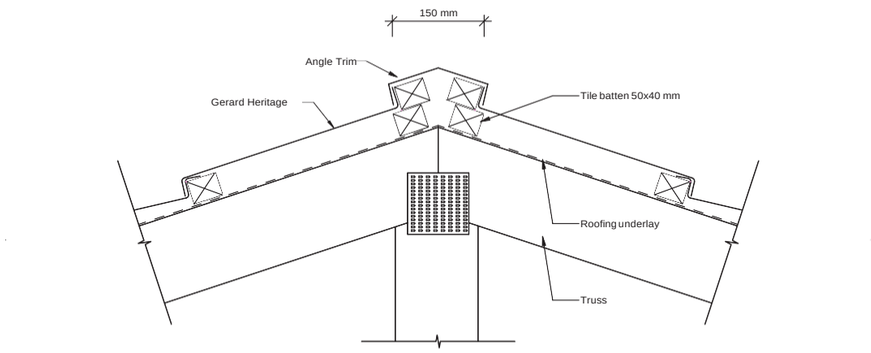

Fig 004 - Gerard Angle Trim Ridge Board/Batten - Truss

KDC - Approved Building Consent Document - BC210441 - Pg 145 of 512 - 30/08/2021 - ComplyNZ

4.3 Valleys

Gerard Roofs provide valley trays in two widths, a 160mm Combination Valley and a 250mm E2 Wide Valley for use where required by specification.

Valleys must be supported by valley boards; these should be installed with nogging where necessary.

The nogging should have at least 25 mm clearance beyond where the valley sits so battens have sufficient support and nailing width.

Panels above valleys should be turned down to within 5 mm of the valley tray but must not touch the tray.

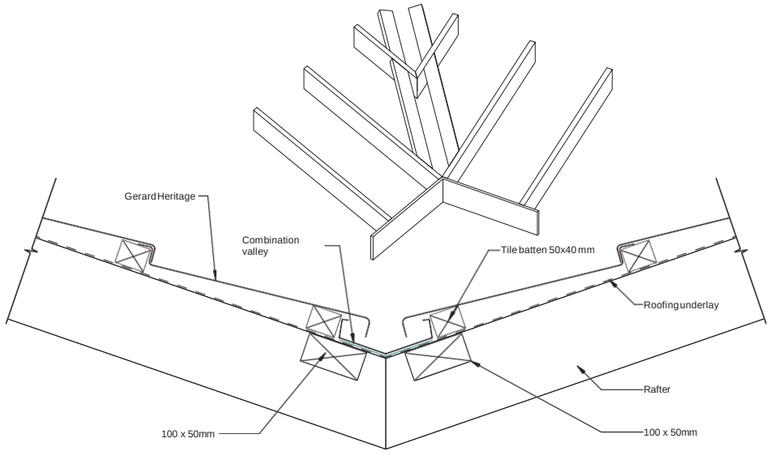

Fig 005 - Gerard Combination Valley

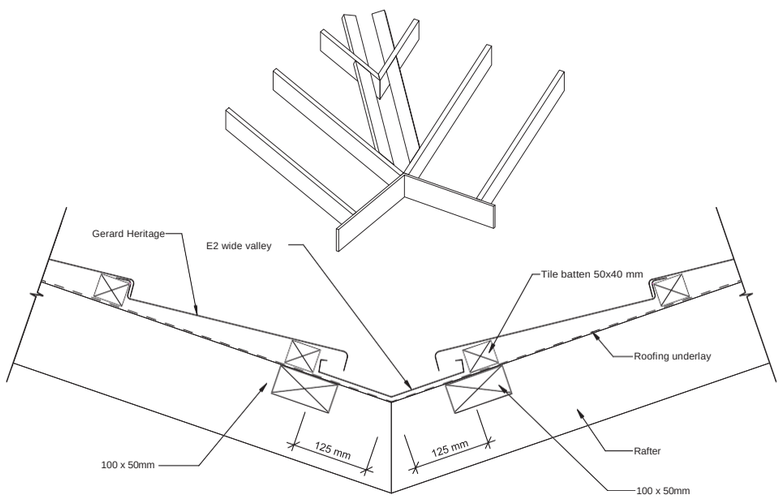

Fig 006 - Gerard E2 Wide Valley

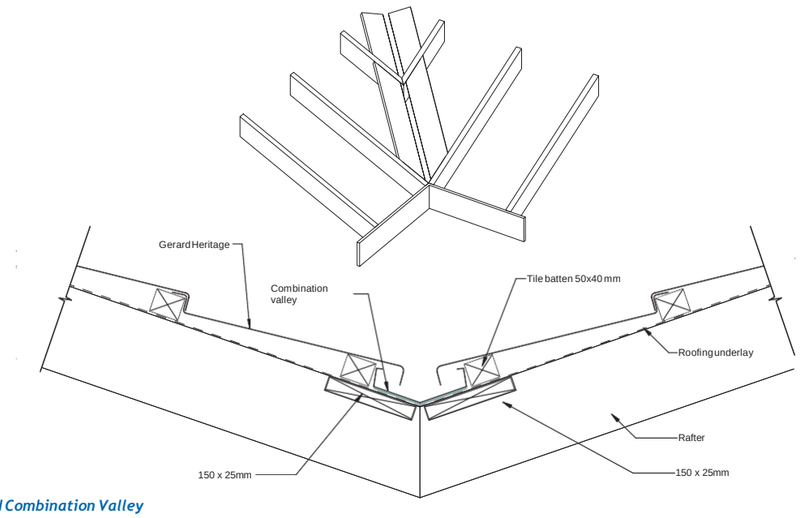

Fig 007 - Gerard Combination Valley

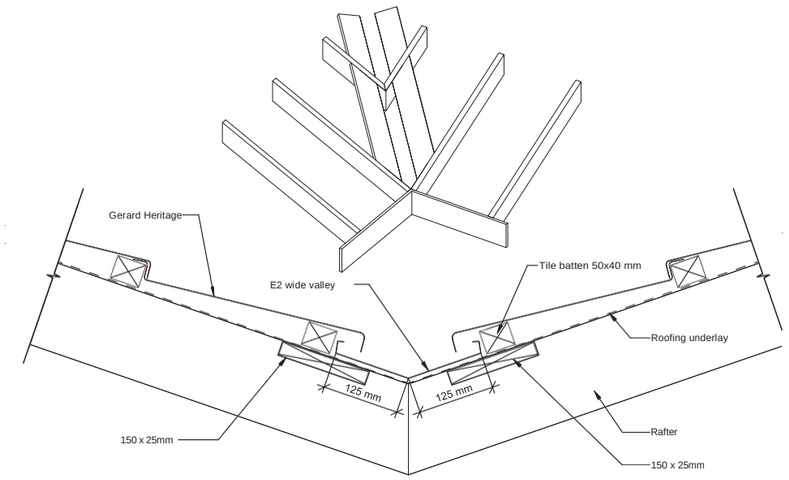

Fig 008 - Gerard Valley - E2 Wide Valley

KDC - Approved Building Consent Document - BC210441 - Pg 146 of 512 - 30/08/2021 - ComplyNZ

4.4 Hips

4.4.1 Installation of roof trim on hip junction with wooden battens

Roof panels that butt up to hip battens should be turned up by 40 mm; roof trims must cover battens and overlap panels below by a minimum of 35 mm.

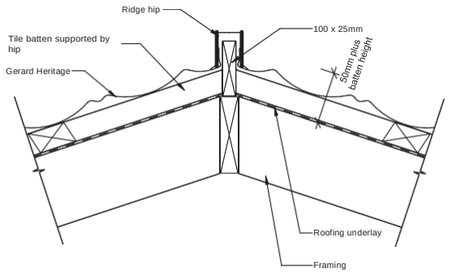

Fig 009 - Gerard Heritage Hip - Box Trim

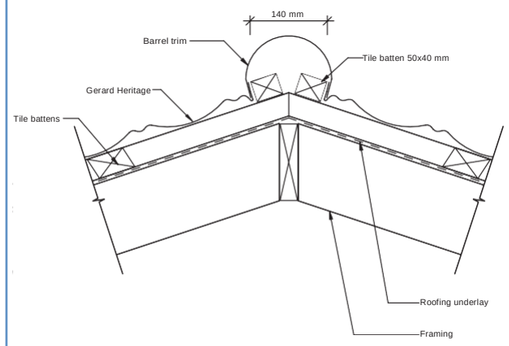

Fig 010 - Gerard Heritage Hip - Barrel Trim

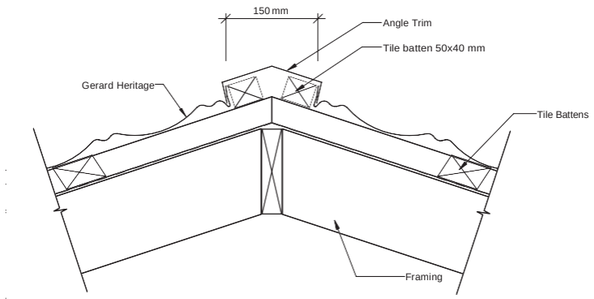

Fig 011 - Gerard Heritage Hip - Angle Trim

4.5 Barge/Gable ends

4.5.1 Installation of roof trim over a wooden fascia with batten

Roof panels that butt up to edge battens should be turned up by 40 mm; roof trims must cover battens and overlap panels below by a minimum of 25 mm.

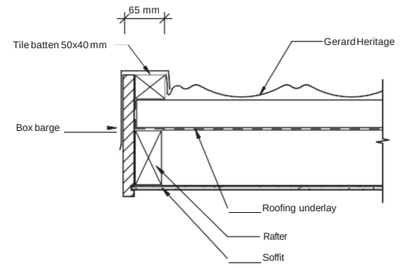

Fig 012 - Gerard Heritage Gable End - Box Barge

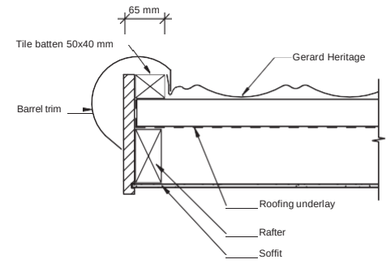

Fig 013 - Gerard Heritage Gable End - Barrel Trim

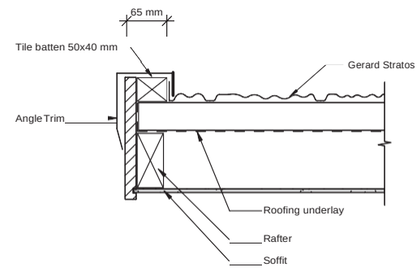

Fig 014 - Gerard Stratos Gable End - Angle Trim

4.5.2 Installation of roof trim over a metal fascia with and without batten

Roof panels that butt up to edge battens should be turned up by 40 mm; roof trims must cover battens and overlap panels below by a minimum of 25 mm.

Roof trims should be riveted to the metal facia.

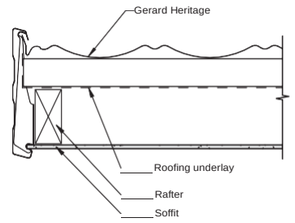

Fig 015 - Gerard Heritage Fascia - Box Trim

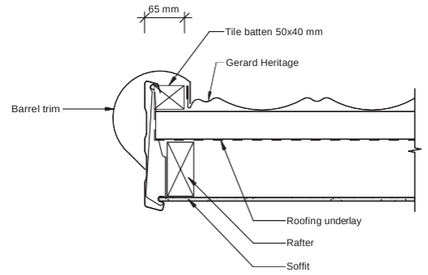

Fig 016 - Gerard Heritage Fascia - Barrel Trim

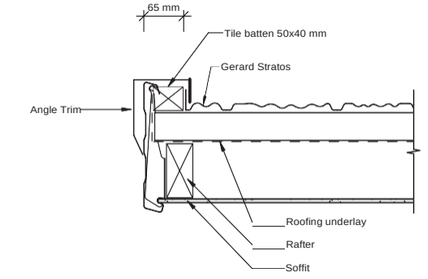

Fig 017 - Gerard Stratos Fascia - Angle Trim

KDC - Approved Building Consent Document - BC210441 - Pg 147 of 512 - 30/08/2021 - ComplyNZ

4.6 Wall flashings

There are several types of wall flashings that may be used with various thicknesses of wall claddings.

Gerard Roofs manufacture most of these without hooks or hems which then requires 100 mm coverage of the section hidden behind the wall cladding.

4.6.1 Side flashings

Side flashings are general purpose flashings suitable for use with most wall claddings.

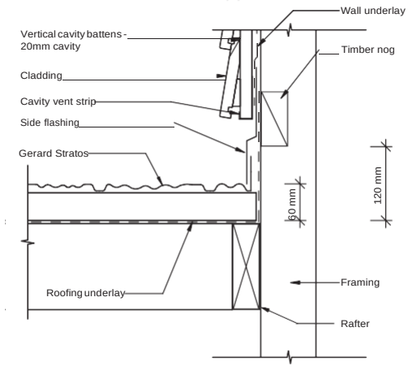

Fig 018 - Gerard Stratos Wall Parallel - Side Flashing

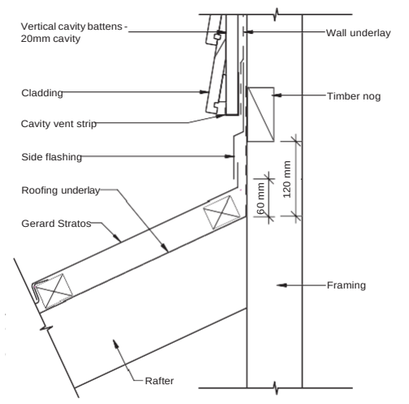

Fig 019 - Gerard Wall Transverse - Side Flashing

4.6.2 Step - Pitch flashings

Pitch flashings are a special system for thicker wall claddings like brick veneer. The transverse wall flashing is folded to closely match the roof pitch allowing the corner junctions to mitre neatly.

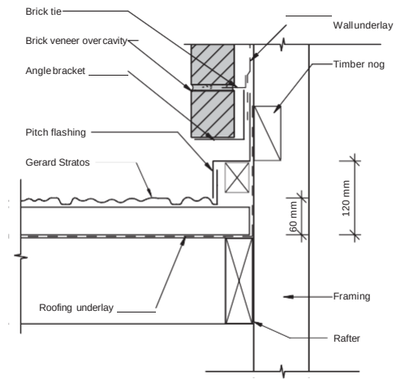

Fig 020 - Gerard Stratos Wall Parallel - Pitch Flashing

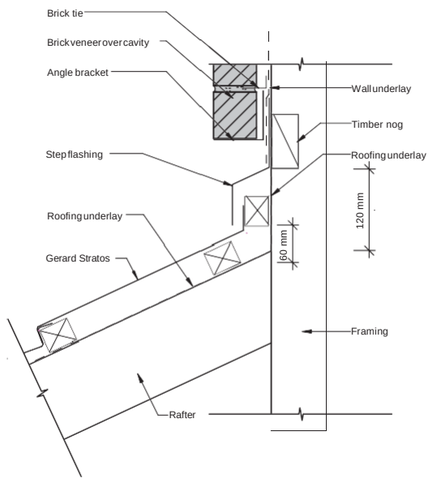

Fig 021 - Gerard Wall Transverse - Step Flashing

4.6.3 Soft edge apron flashings

Soft edge apron flashings are general purpose flashings suitable for most wall claddings. The soft edged aluminium is moulded down to meet the surface of the panel.

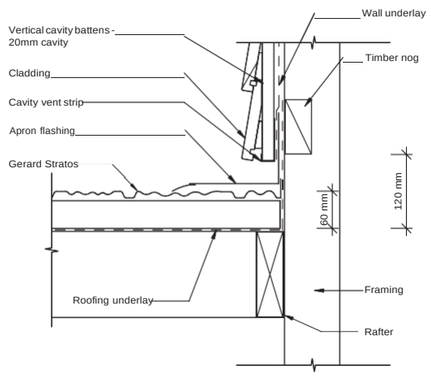

Fig 022 - Gerard Stratos Wall Parallel - Apron Flashing

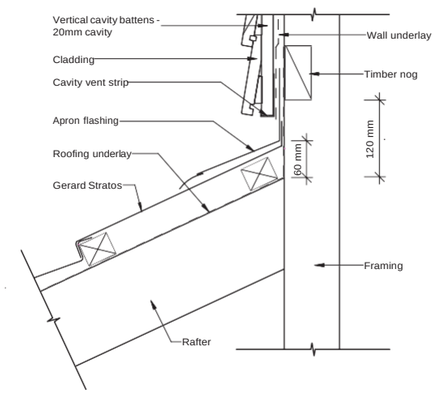

Fig 023 - Gerard Transverse - Apron Flashing

4.7 Wall Stop Ends

Gerard Roofs proprietary PVC Stop Ends direct water away from the roof and wall and into the rain water collection gutters. There are left and right versions.

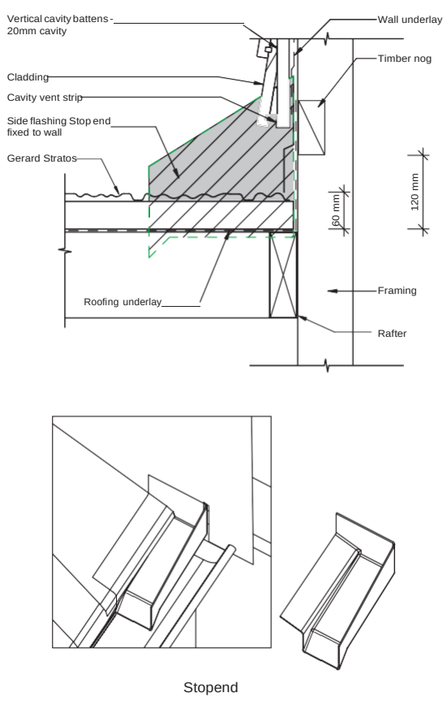

Fig 024 - Gerard Wall Parallel - Stop End Wall

4.8 Change in pitch

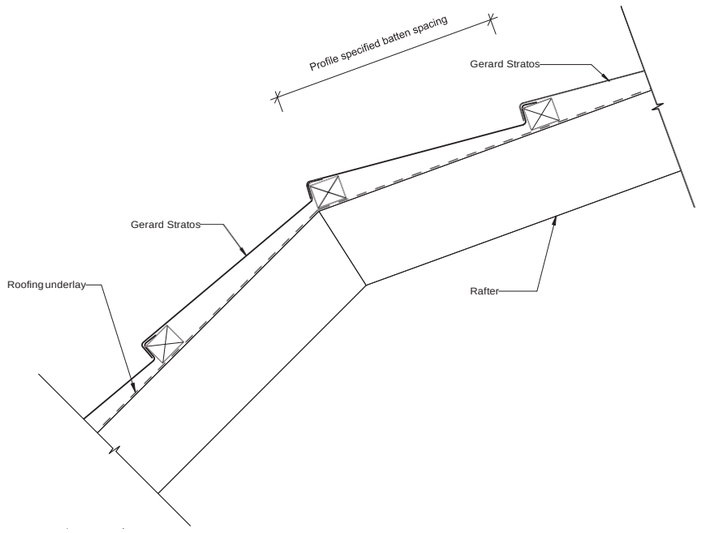

Fig 025 - Gerard Change in Pitch - Low Pitch to High Pitch
A batten is located at the point where the roof line changes pitch. If an exact number of courses of full panels is not practical a panel may be bent to suit.

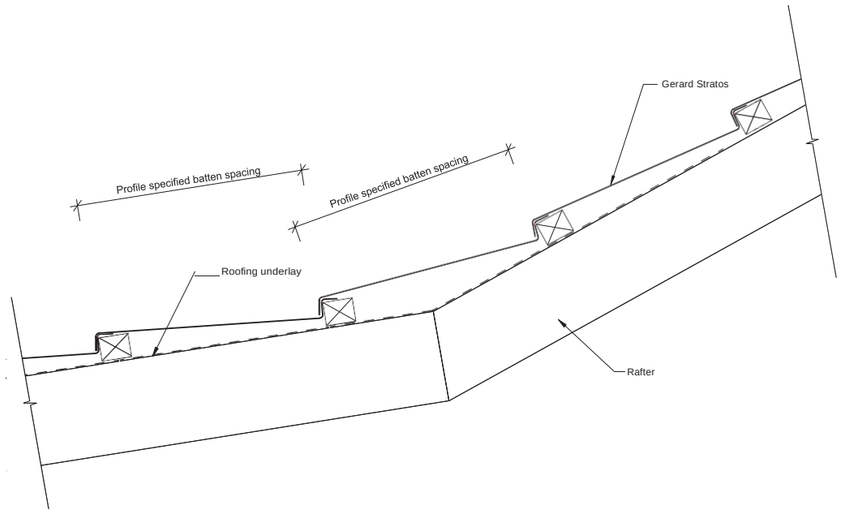

Fig 026 - Gerard Change in Pitch
A batten is located at the point where the roof line changes pitch. If an exact number of courses of full panels is not practical a panel may be bent to suit.

KDC - Approved Building Consent Document - BC210441 - Pg 148 of 512 - 30/08/2021 - ComplyNZ

4.9 Penetrations

4.9.1 Pipes

Pipe penetrations should be flashed using an EPDM flexible sleeve/boot or similar, such as Aquaseal. The edge of the EPDM flexible sleeve/boot should be fixed at 45° to horizontal.

4.9.2 Chimneys

Chimneys require specific flashings depending on the type and width of the chimney.

Cylindrical chimneys may be flashed with a large EPDM rubber sleeve similar to pipe flashings.

Rectangular chimneys require a back flashing. For chimneys up to 600 mm wide this may be made of flat sheet supplied by Gerard Roofs, AZ150 pre-painted steel, aluminium, or a supported butyl membrane.

Chimneys exceeding 600mm in width

For chimneys and other penetrations wider than 600mm an internal gutter should be used to create a fall to the edges of the penetration.

This requires a cricket flashing or slope to direct water to the edges using a supported butyl membrane.

Where the chimney is situated at the eave an internal gutter should be installed around the side to allow water to exit into the eave's rainwater system.

Angled internal gutters should be formed using butyl rubber or other inert material such as aluminium. These should be installed by suitably qualified Licensed Building Practitioners (LBPs).

4.9.3 Roof windows

Refer to specific roof window supplier's installation instructions. Typically this will involve cutting and bending panels up to the perimeter of the roof window in a manner that supports installation of the proprietary flashings supplied by the roof window manufacturer.

4.9.4 Solar panels

Refer to specific solar panel supplier's installation instructions. Note that these should allow for fastening directly to the rafters and not to the roof panel battens. Penetrations of the support must be appropriately flashed to ensure weather security, e.g. an EPDM flexible sleeve/boot.

KDC - Approved Building Consent Document - BC210441 - Pg 149 of 512 - 30/08/2021 - ComplyNZ

4.10 Extra high wind zone installation

Refer to *Table 04 Fasteners for Panel Battens - Wind Zones - NZS3604.* (Page 23)

Gerard Roofs fixing patterns do not change for extra high wind zones.

Gerard Roofs can provide a wall flashing that retains the panel turn up and offers greater wind-blown rain protection. This is an extended side flashing that has a soft edge to contour the panel surface and a hem at the top section that is mandatory for roofs in extra high wind zones.

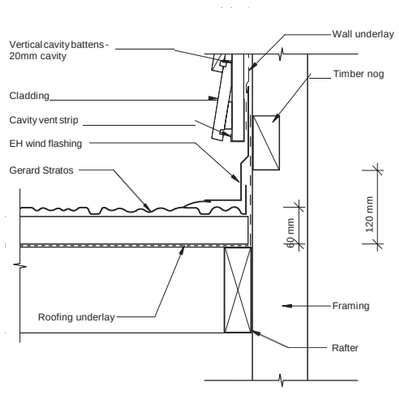

Fig 027 - Gerard Stratos Parallel - EH Wind Wall Flashing

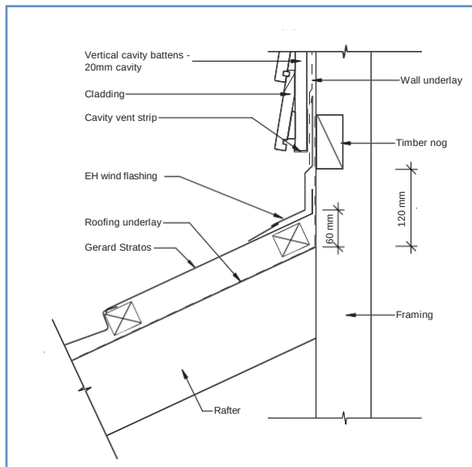

Fig 028 - Gerard Wall Transverse - EH Wind Wall Flashing



5.0 Components & fixing patterns

This section contains useful installation information for very detailed specification. You'll find a complete list of Gerard Roofs componentry and specific layout and fixing instructions for each of the eight Gerard Roof profiles. The information contained in this section is also contained in individual product profile sheets available for download at www.gerardroofs.co.nz/designtech

KDC - Approved Building Consent Document - BC210441 - Pg 150 of 512 - 30/08/2021 - ComplyNZ

5.1 Gerard Roofs components

To accompany their eight roof profile panels – Stratos, Senator, Rockport, Alpine, Oberon, Milano, Heritage and Classic – Gerard Roofs produces a full range of accessories.

All components are produced in the same way, from the same steel and, where appropriate, coated to match the roof profile panels themselves using the same materials and techniques to ensure complete synergy for performance and aesthetics.

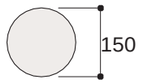

Barrel Trim End

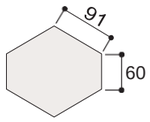

Angle Trim End

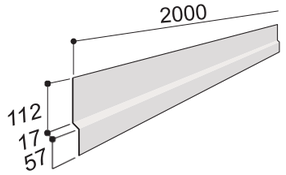

Side Flashing

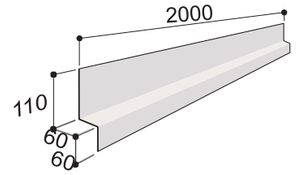

Pitch Flashing

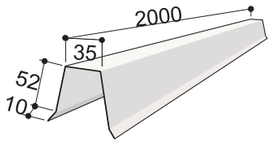

Box Trim

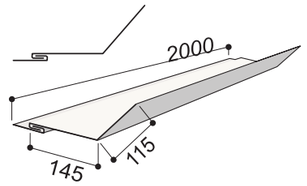

Apron Flashing

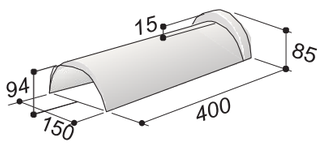

Barrel Trim

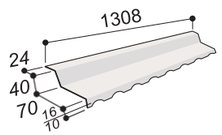

Milano Ridge Flashing

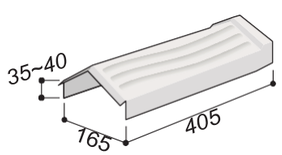

Angle Trim

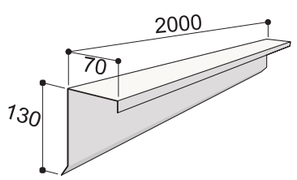

Box Barge

5.0 Components & fixing patterns

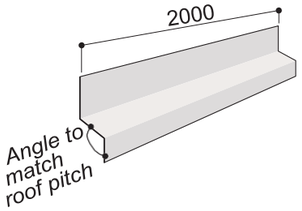

Step Flashing

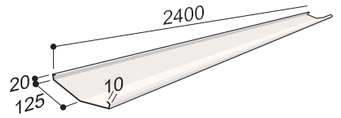

E2 Wide Valley



Left Stop End

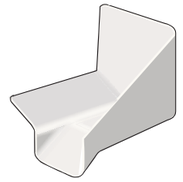

Right Stop End

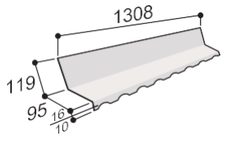

Milano Wall Flashing

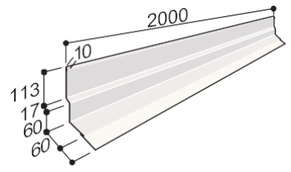

EH Wind Wall Flashing

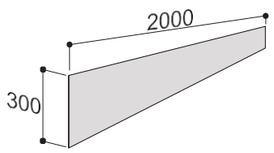

Flat Sheet 300 (Also 400 and 490)

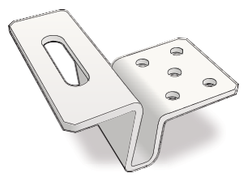

Solar Brackets

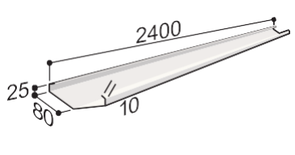

Combination Valley

5.2 Gerard Stratos installation

Panel installation instructions & nailing positions

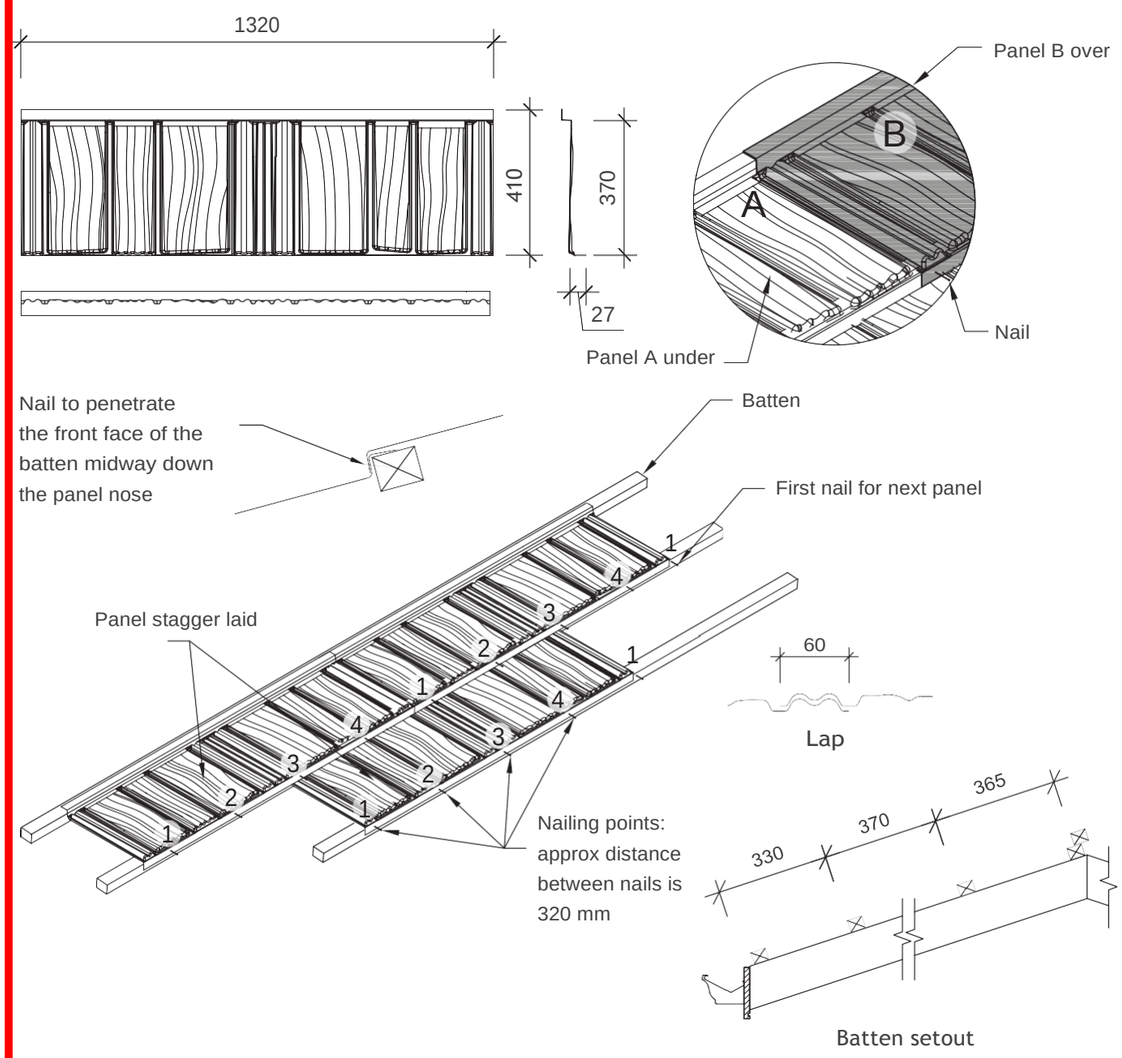

Fixing

- The nose of each panel is held down at 5 points.
- This comprises 4 nails as per the diagrams plus the nailed overlapping panel.

Fastening Panels in Cyclone Areas

- Where a building has been designed outside the scope of NZS 3604. Gerard panels (tiles) on buildings with a wind load design of above 3.8 kPa should be fastened at approx 160 mm spacing (each module).

Dimensions and weights given are nominal.

KDC - Approved Building Consent Document - BC210441 - Pg 151 of 512 - 30/08/2021 - ComplyNZ

5.0 Components & fixing patterns

5.3 Gerard Senator installation

Panel installation instructions & nailing positions

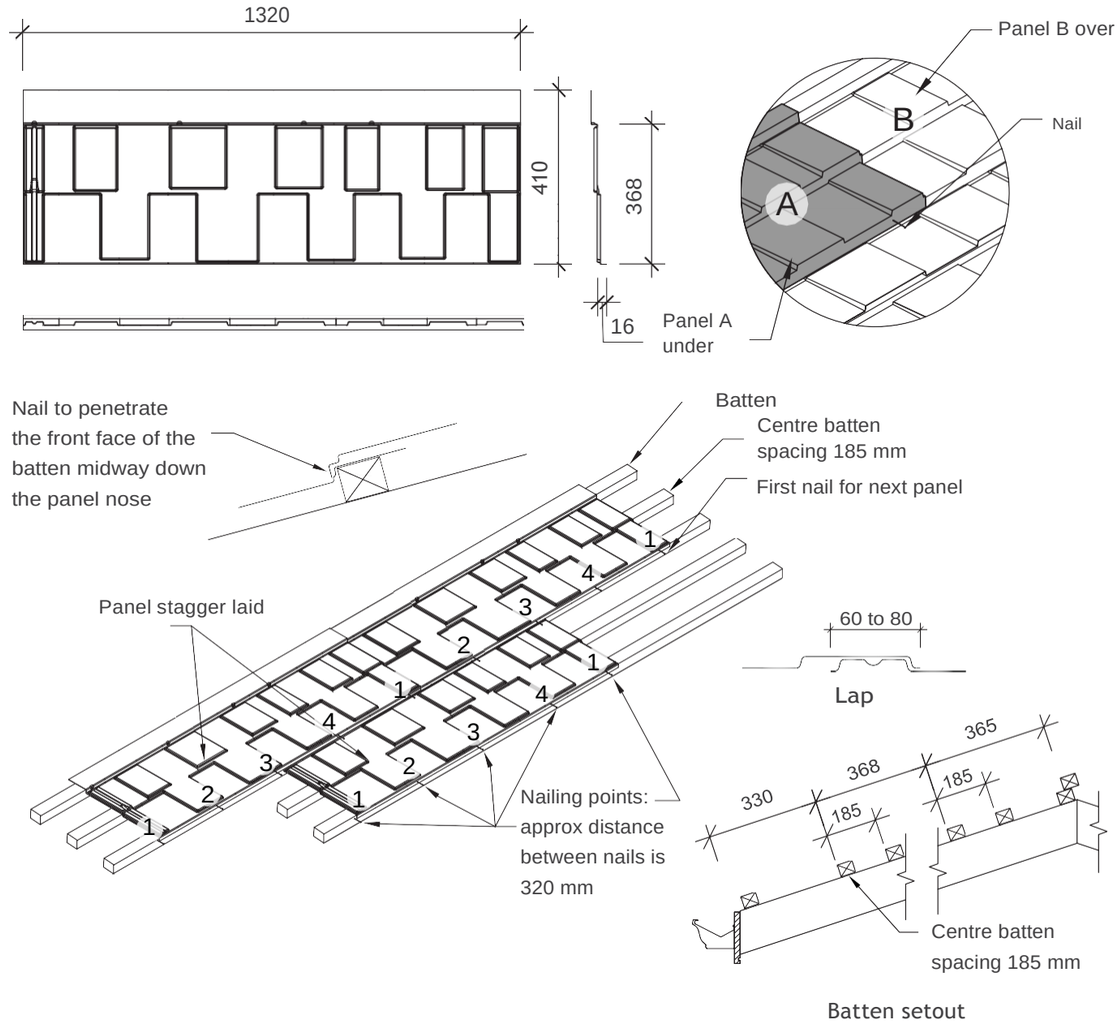

Fixing

- The nose of each panel is held down at 5 points.
- This comprises 4 nails as per the diagrams plus the nailed overlapping panel.

Fastening Panels in Cyclone Areas

- Where a building has been designed outside the scope of NZS 3604. Gerard panels (tiles) on buildings with a wind load design of above 3.8 kPa should be fastened at approx 160 mm spacing (each module).

Dimensions and weights given are nominal.

5.4 Gerard Rockport installation

Panel installation instructions & nailing positions

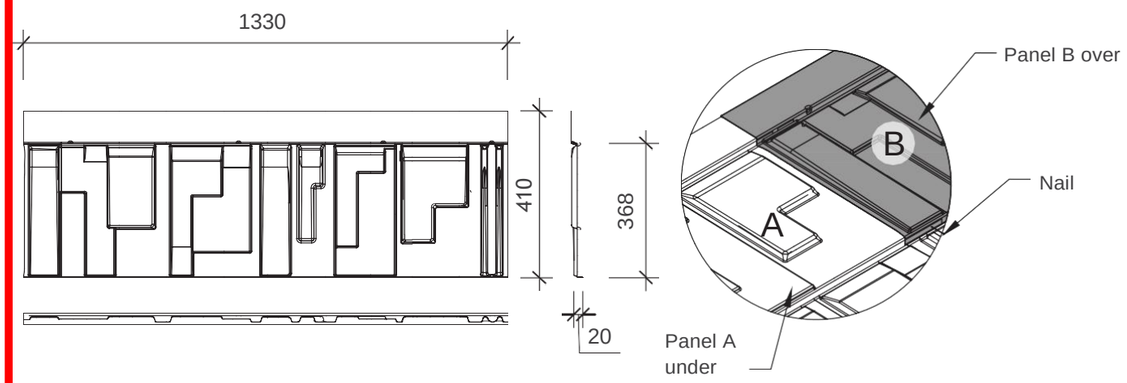

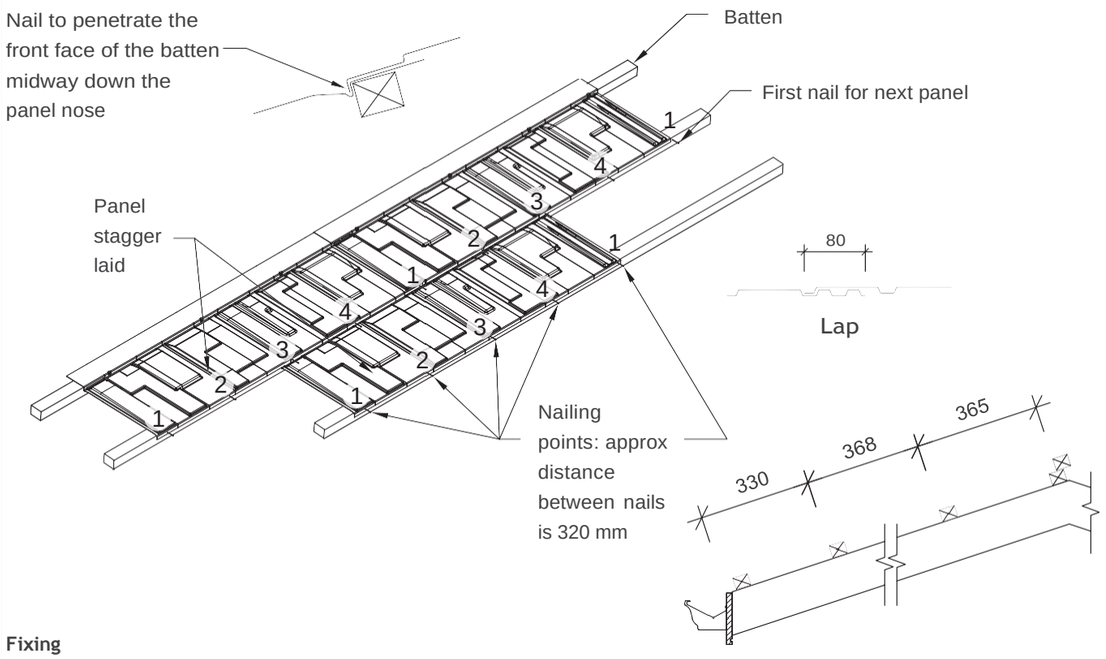

Batten setout

Fixing

- The nose of each panel is held down at 5 points.
- This comprises 4 nails as per the diagrams plus the nailed overlapping panel.

Fastening Panels in Cyclone Areas

- Where a building has been designed outside the scope of NZS 3604. Gerard panels (tiles) on buildings with a wind load design of above 3.8 kPa should be fastened at approx 160 mm spacing (each module).

Dimensions and weights given are nominal.

KDC - Approved Building Consent Document - BC210441 - Pg 152 of 512 - 30/08/2021 - ComplyNZ

5.0 Components & fixing patterns

5.5 Gerard Alpine installation

Panel installation instructions & nailing positions

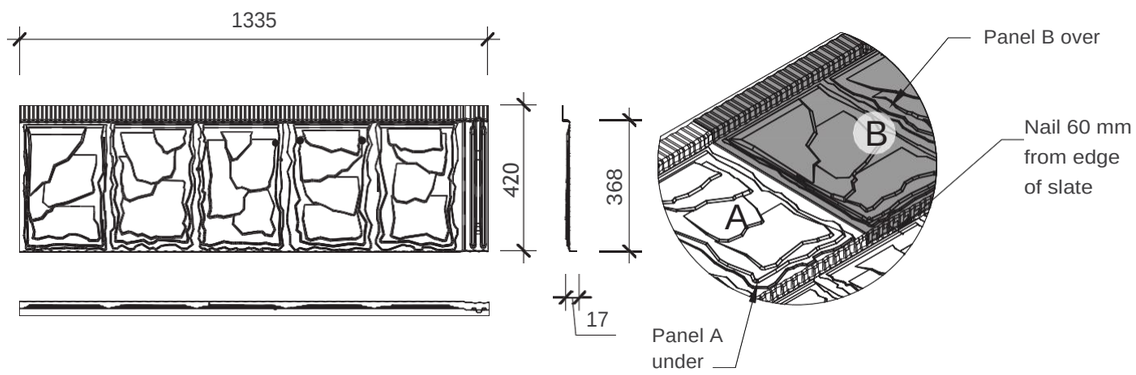

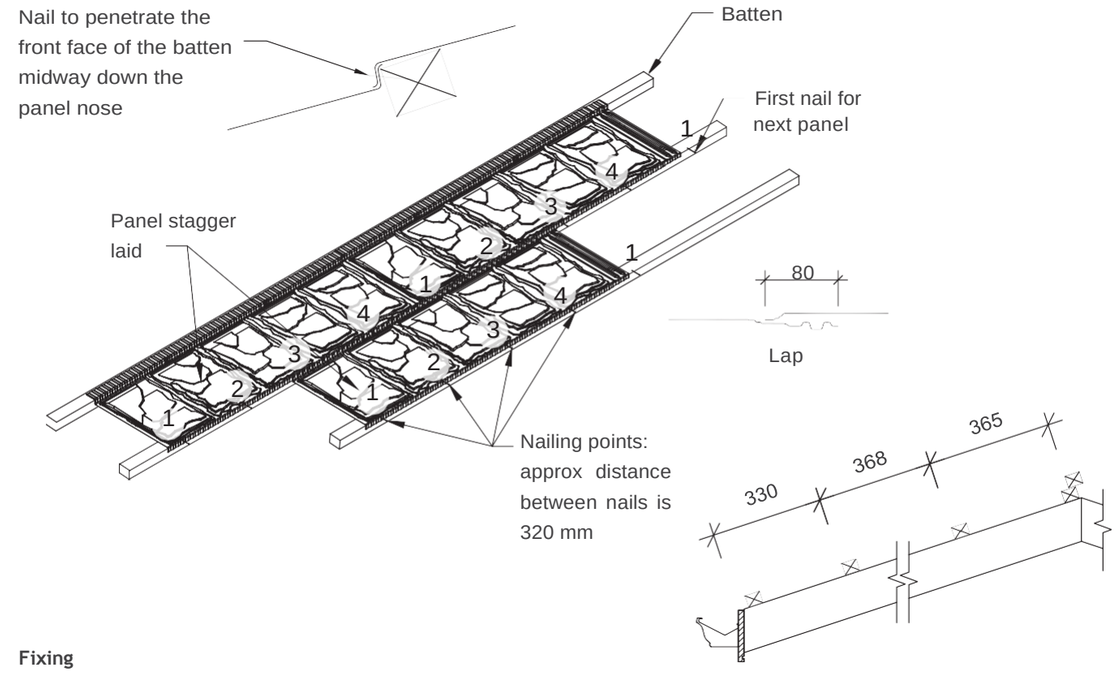

Batten setout

Fixing

- The nose of each panel is held down at 5 points.
- This comprises 4 nails as per the diagrams plus the nailed overlapping panel.

Fastening Panels in Cyclone Areas

- Where a building has been designed outside the scope of NZS 3604. Gerard panels (tiles) on buildings with a wind load design of above 3.8 kPa should be fastened at approx 160 mm spacing (each module).

Dimensions and weights given are nominal.

KDC - Approved Building Consent Document - BC210441 - 30/08/2021 - Pg 153 of 512 - ComplyNZ

5.6 Gerard Oberon installation

Panel installation instructions & nailing positions

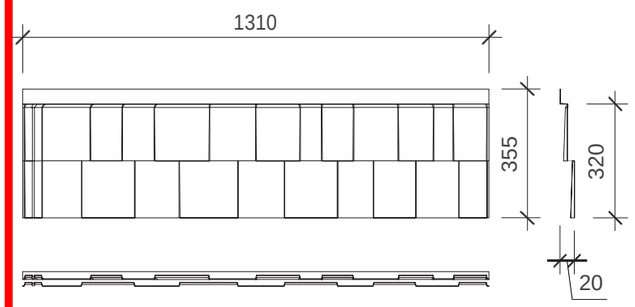

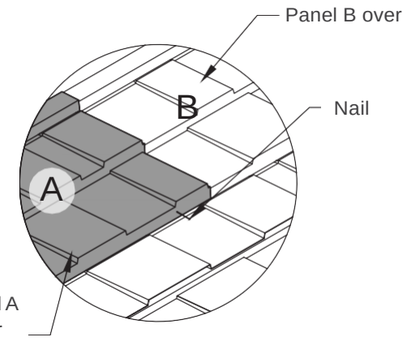

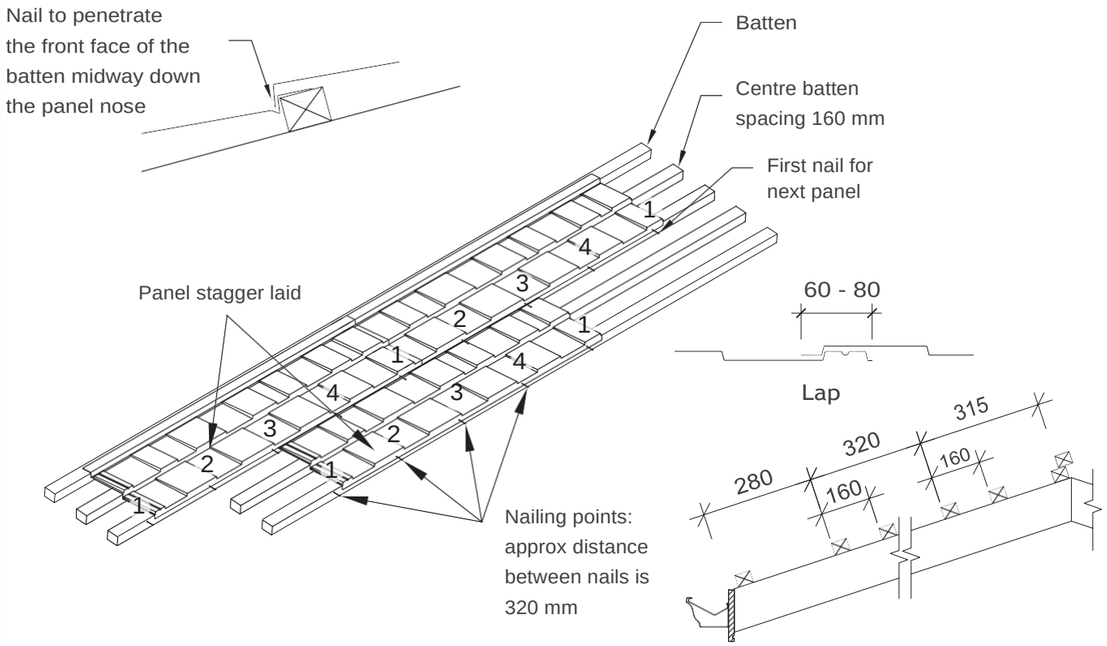

Batten setout

Fixing

- The nose of each panel is held down at 5 points.
- This comprises 4 nails as per the diagrams plus the nailed overlapping panel.

Fastening Panels in Cyclone Areas

- Where a building has been designed outside the scope of NZS 3604. Gerard panels (tiles) on buildings with a wind load design of above 3.8 kPa should be fastened at approx 160 mm spacing (each module).

Dimensions and weights given are nominal.

5.0 Components & fixing patterns

5.7 Gerard Heritage installation

Panel installation instructions & nailing positions

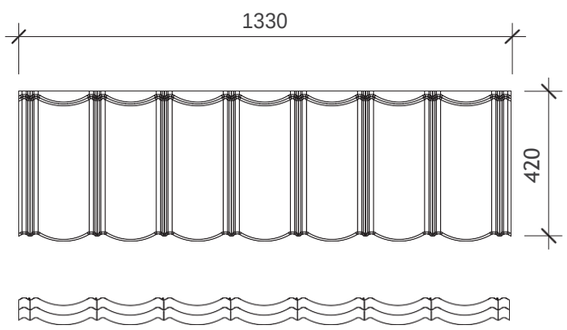

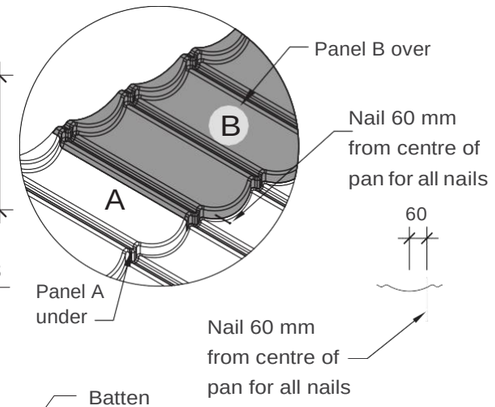

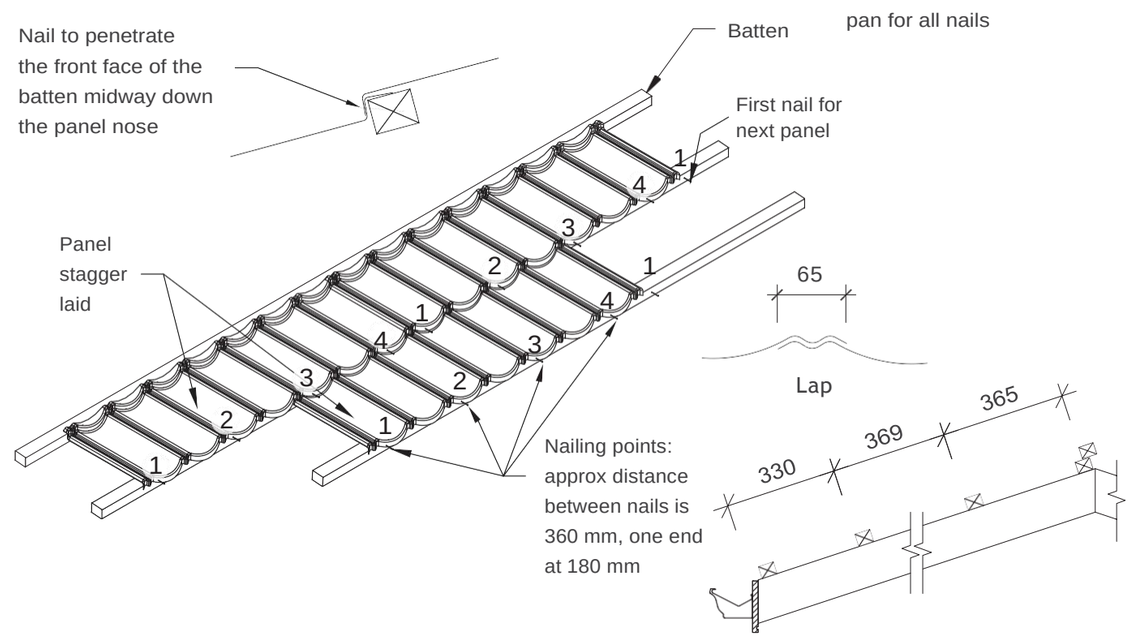

Batten setout

Fixing

- The nose of each panel is held down at 5 points.
- This comprises 4 nails as per the diagrams plus the nailed overlapping panel.

Fastening Panels in Cyclone Areas

- Where a building has been designed outside the scope of NZS 3604. Gerard panels (tiles) on buildings with a wind load design of above 3.8 kPa should be fastened at approx 160 mm spacing (each module).

Dimensions and weights given are nominal.

KDC - Approved Building Consent Document - BC210441 - Pg 154 of 512 - 30/08/2021 - ComplyNZ

5.8 Gerard Milano installation

Panel installation instructions & nailing positions

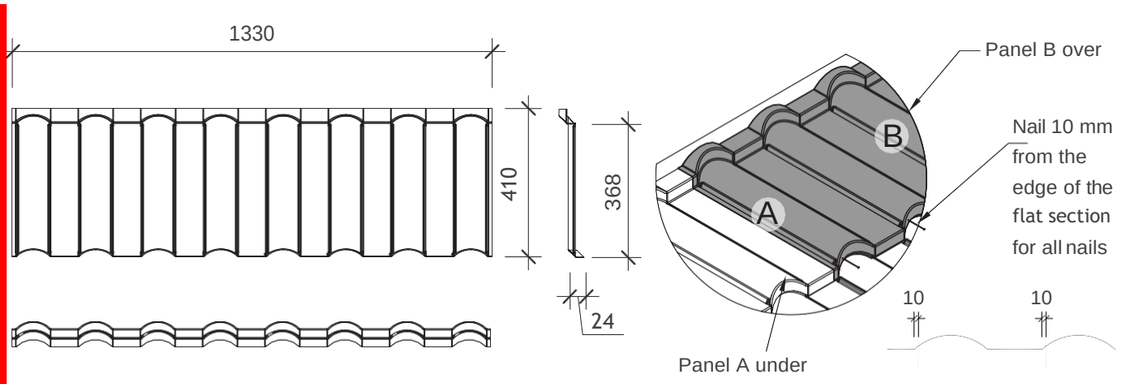

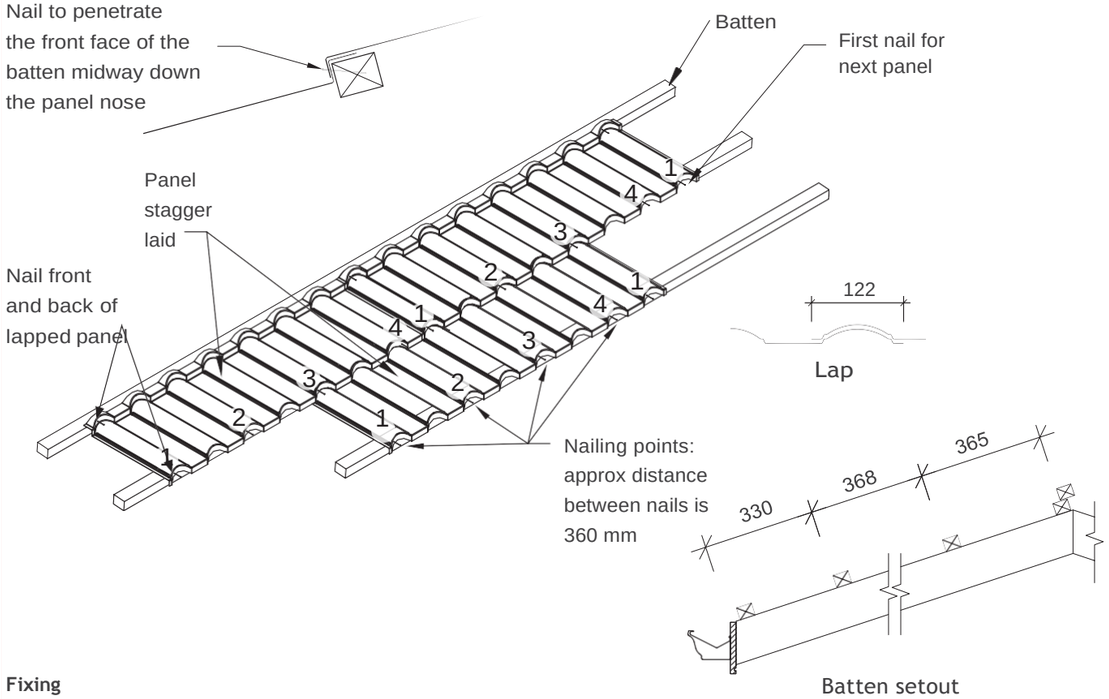

Fixing

- The nose of each panel is held down at 5 points.
- This comprises 4 nails as per the diagrams plus the nailed overlapping panel.
- Nail front and back of lapped panel.

Fastening Panels in Cyclone Areas

- Where a building has been designed outside the scope of NZS 3604. Gerard panels (tiles) on buildings with a wind load design of above 3.8 kPa should be fastened at approx 160 mm spacing (each module).

Dimensions and weights given are nominal.

5.9 Gerard Classic installation

Panel installation instructions & nailing positions

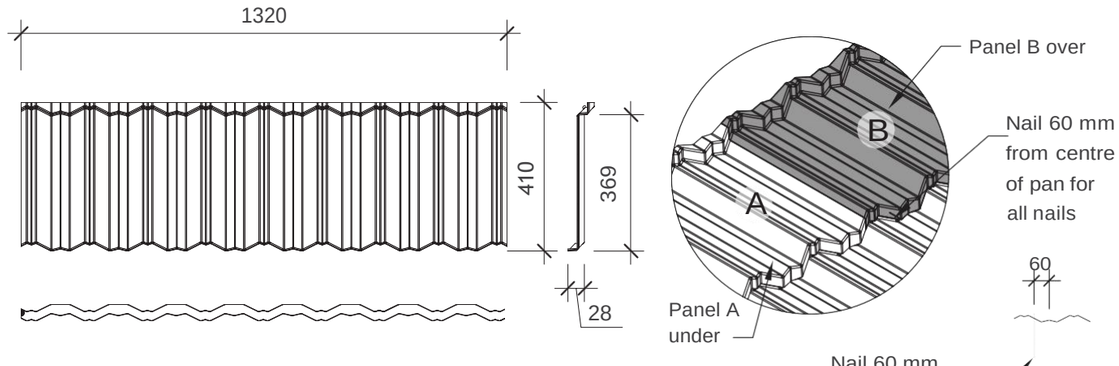

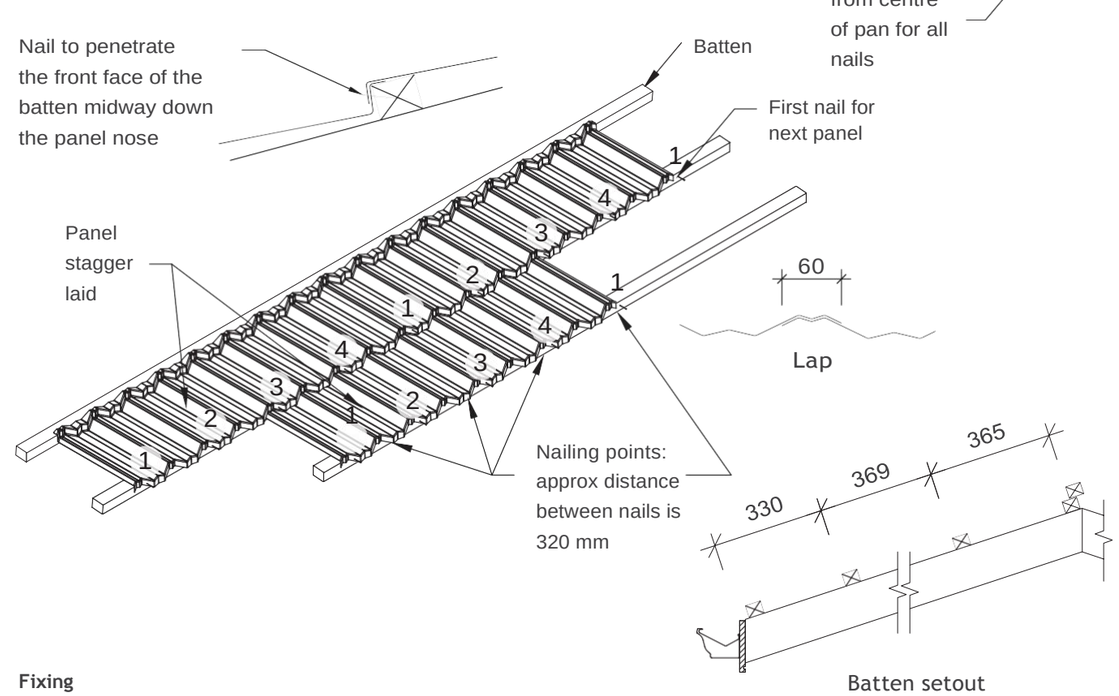

Fixing

- The nose of each panel is held down at 5 points.
- This comprises 4 nails as per the diagrams plus the nailed overlapping panel.

Fastening Panels in Cyclone Areas

- Where a building has been designed outside the scope of NZS 3604. Gerard panels (tiles) on buildings with a wind load design of above 3.8 kPa should be fastened at approx 160 mm spacing (each module).

Dimensions and weights given are nominal.

KDC - Approved Building Consent Document - BC210441 - Pg 155 of 512 - 30/08/2021 - ComplyNZ

Important information about this material

The Gerard Roofing System

RoofTG Pacific Ltd accepts no liability if the Gerard roofing system is not used in accordance with instructions contained in this publication.

Use only the current specification

This publication may be superseded by a newer publication. RoofTG Pacific Ltd accepts no liability for reliance upon publications that have been superseded. Before using this manual check whether this is the current version; simply call the Gerard Roofs Helpline on 0800 100 244 or visit www.gerardroofs.co.nz

Substitution

RoofTG Pacific Ltd accepts no liability if the systems are not installed in accordance with instructions contained in this and other Gerard Roofs technical literature. Substitution of specified or recommended components with alternative brands can compromise performance dramatically. The Gerard roofing system is not generic and must be installed as specified including the use of Gerard branded components.

PO Box 18071
Glen Innes
Auckland 1743

Freephone: 0800 100 244

www.gerardroofs.co.nz

Trade marks

The names, Gerard®, Stratos®, Senator®, Rockport®, Alpine®, Oberon®, Heritage®, Milano®, Classic®, Roofing Designed to Endure® and the Gerard® Roofs logo are all registered trademarks that are owned by RoofTG Pacfic Ltd.

Copyright

Copyright © RoofTG Pacific Ltd 2020. All of the material contained in this manual, including all text, tables, charts, graphs, drawings, diagrams and the Gerard Roofs CAD Detail Numbering System are protected by copyright. These materials may not be reproduced, adapted or transmitted in any form by any process, without the permission of RoofTG Pacific Ltd.

RoofTG Pacific Ltd asserts its moral rights and reserves all other intellectual property rights in the materials contained in this manual.

GER2006-25
This edition published July 2020

KDC - Approved Building Consent Document - BC210441 - Pg 156 of 512 - 30/08/2021 - ComplyNZ

ROOF CARE AND MAINTENANCE.

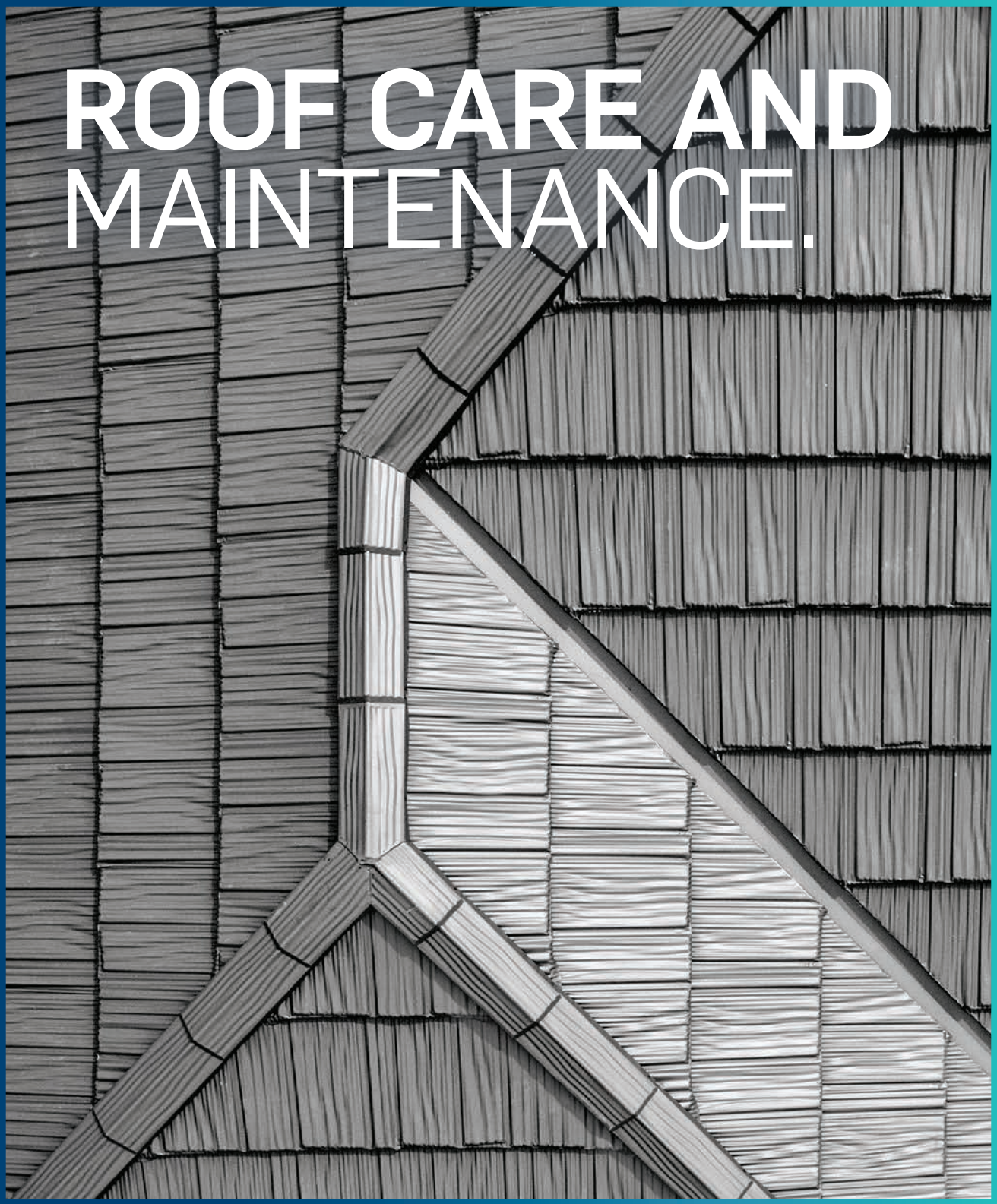

Maintenance of Gerard textured or smooth finish roofs is primarily a matter of preventing or removing unwanted algae, moss and lichen that may grow on the roof.

GERARD
Roofing Designed to Endure

LOOKING AFTER YOUR GERARD ROOF

Keeping your roof clean

It is a condition of the material and product warranty for Gerard Roofs' products that the roof is kept free of organic growth by periodic cleaning with an appropriate agent.

Why would my roof need cleaning?

Organic growth like lichen and moss is a natural phenomenon that occurs on most permanent outdoor structures including your roof.

Its appearance and extent is dependent on local conditions and can even vary on different parts of the same roof. Temperature and humidity, the pitch and orientation of the roof and the location of nearby trees are all possible contributing factors.

Left unchecked, organic growth can cause damage to the surface coating of your roof and can create 'moisture traps' that cause corrosion.

Atmospheric pollutants

Atmospheric pollutants such as dirt from building sites, fertilisers from nearby farms and pollen also contaminate roofs. These are often mistaken for organic growth, particularly on new roofs.

Pollutants may rinse off in heavy rain - if they don't they should be washed off or they may remain and contribute nutrients for organic growth to accumulate on in future.

Recognising different types of growth

There are several organic nasties to look out for including mosses, algal growth (which may be apparent as either a green or black staining of the surface) and lichens (which can vary from light green through to bright orange, in a number of different shapes, dependent on species).

Treat unwanted growth with Gerard Roof Refresh

Remove any unwanted growth by spraying with Gerard Roof Refresh or another suitable chemical cleaner. You can do this yourself or contact a commercial contractor who specialises in this type of work. (Your Gerard Certified Roofer can put you in touch with someone reputable who can clean your roof cost effectively.)

Some organic growths will be killed immediately after spraying, and will disappear after a few rainfalls. Other types of growths, such as black algae and lichen, may take many rainfalls and as long as 6 months to be removed from the surface.

You will know the treatment is working if the organic growth changes colour. This may take from a few days to a few weeks. In some circumstances, like particularly heavy infestations, it may be necessary to re-apply the cleaning agent 1–2 months after the original application to ensure that all growth has been terminated.

Water blasting is generally not recommended for cleaning organic growth from Gerard tiles, but may be used to remove residual matter after the growth and its spores have been chemically treated. Care must be taken not to damage the surface coating.

Prevent growth before it happens

Treating the roof will not only kill any growth, but also the spores that lead to it. We suggest treating the roof every three to five years, however if you see growth occurring sooner, we recommend you treat the roof immediately.

It's best to chemically clean your roof before growths are seen, as a preventive measure. Spores may be present on the roof for up to two years before the appearance of any organic growth.

Don't accidentally taint your drinking water

If rainwater is collected from the roof for drinking, the water connection system should be disconnected from the tank before any chemical cleaning of the roof and before the installation of any new tiles.

The system should remain unconnected for at least three heavy rainfalls to ensure the removal of any residue. Alternatively the roof can be thoroughly hosed down with clean water before reconnection.

Special note about run-off to stormwater

The majority of local government bodies have prohibitions against chemicals being washed away in stormwater systems. Check with your local authority about prevailing requirements as to disposal/ diversion of waste water before treating your roof.

USE ONLY APPROVED CLEANING PRODUCTS		
	Smooth finish (any age) / Textured finish (under 5 years old)	Textured finish (over 5 years old)
Treatment	Gerard Roof Refresh or appropriate sanitising wash (known variously as Alkyl Benzyl Ammonium Chloride or Quaternary Ammonium compounds)	Gerard Roof Refresh, hypochlorite, bleach or other sanitising wash (known variously as Alkyl Benzyl Ammonium Chloride or Quaternary Ammonium compounds)
Application	Follow the manufacturer's recommendations on application rates, strengths and compatibility in all circumstances; most stringently in situations where rainwater is collected from the roof for drinking.	

NB: Hypochlorite based cleaners should never be used on Smooth Finish roofs, nor used on Textured roofs under 5 years old as it can affect the clear overglaze that is applied to the tiles during their manufacture.

KDC - Approved Building Consent Document - BC210441 - Pg 157 of 512 - 30/08/2021 - ComplyNZ

KDC - Approved Building Consent Document - BC210441 - Pg 158 of 512 - 30/08/2021 - ComplyNZ

Dealing with corrosion

Your Gerard roof is made of steel and, despite its protective coatings, may be subject to some form of corrosion during its lifespan. In the unlikely event this occurs, you should take steps to prevent any rust spots from developing into holes.

In most cases, where only a handful of tiles show signs of corrosion, it's usually straightforward to have these replaced, after identifying and mitigating the cause of the corrosion. (Your Gerard Certified Roofer can sort this out cost effectively.)

Corrosion could affect your warranty

Please note that rust left untreated and leading to failure of components may invalidate a warranty claim. The warranty provides for 50 years weather-tightness for your roof, not for the absence of corrosion nor that the roof remain maintenance-free.

Re-coating your Gerard roof

Your Gerard roof has been manufactured to last a long time. However, as with all coated roofing materials, its surface will need to be refurbished as part of its maintenance at some future point.

Signs that it's time to re-coat your roof

If your Gerard roof develops white corrosion deposits over the surface it's usually a sign that recoating is now prudent – left to deteriorate this may lead to more difficult problems.

Gerard smooth finish roofs

If your roof has a smooth finish, re-coating is best undertaken by a roof-restoration contractor who can also carry out any necessary repairs at the same time. (Your Gerard Certified Roofer can put you in touch with the right people.)

If you do wish to take on re-coating your roof as a Do-It-Yourself project please contact Gerard Roofs for the most up to date advice on appropriate materials and procedures.

Gerard textured roofs

If you have a textured roof, Gerard Roofs recommends that re-coating is undertaken by a specialist contractor. These people have the expertise, access to the appropriate equipment and to coatings which are not available through normal retail outlets.

A specialist roof-restoration contractor can also carry out any repairs your roof may need. (Your Gerard Certified Roofer can put you in touch with the right company.)

Alterations to your Gerard roof

This section contains technical information for tasks beyond routine maintenance and should be referred to when making alterations to things that contact or impinge on the roof.

Your Gerard roof is a sophisticated system of interlocking steel tiles fixed to the framing of the house to form an integral part of the structure. As such it may only be installed by recognised and qualified tradespeople.

Gerard Roofs does not recommend roof alterations be undertaken by homeowners on a Do-It-Yourself basis. Work on your Gerard roof that is incorrectly carried out may void the warranty.

Alterations that affect your roof

When making alterations such as adding chimneys, skylights, or extensions to your home, it is important to ensure that the materials used are compatible with your Gerard roof.

Gerard Roofs' tiles are manufactured from Aluminium-Zinc coated steel and then post-coated with a protective and decorative coating system.

Dissimilar Metal Corrosion

When two different metals are in contact and moisture is present, one metal is relatively protected while the other suffers accelerated corrosion. A similar effect often occurs with water flowing over different metals.

This form of corrosion is commonly found:

- Where water is discharged from copper or brass systems over a galvanised or Aluminium-Zinc coated steel roof
- Where lead flashings are applied directly to Aluminium-Zinc coated steel products without proper isolation
- Where fasteners are incompatible with the roofing material

Any electrical contact between dissimilar metals should be avoided, e.g. wet leaves making contact between copper gutters and Aluminium-Zinc coated steel roof tiles.

Directing water-flow to minimise potential corrosion



This chart lists commonly used metals in a 'Galvanic Series'. If any two of these metals are in damp contact or a run-off situation, the metal further to the left will sacrifice itself to protect the metal further to the right. Therefore the simple rule to remember is that you can run water from left to right, but not from right to left. For example zinc to copper is alright, but copper to zinc is not. Specific advice should be sought from Gerard Roofs regarding use of dissimilar metals.

GERARD ROOFS CARE AND MAINTENANCE

KDC - Approved Building Consent Document - BC210441 - Pg 159 of 512 - 30/08/2021 - ComplyNZ

Walking on your Gerard roof

You should not walk on your roof unless it is absolutely necessary. If you do have occasion to, you should wear soft-soled shoes like 'trainers' to avoid damage to the roof's surface. Make sure you always place your weight over the battens (the lowest point of the tile, at the front edge).

If you have to walk on your roof, take your time. Take particular care on steep pitch roofs and, if at all possible, you should avoid walking on the roof when it's wet. Always take appropriate precautions to prevent falls when working at height.

If service/trade persons need to access the roof, let them know that it is a steel tile roof and, if need be, tell them where it's safest to walk. Most good tradespeople know how to walk over roofs but, for safety's sake, they should be informed as to what precautions are required.

Working safely at heights

To stay safe when working on a roof, you need to ensure effective controls are in place to prevent people being harmed. To select the most effective controls, you must consider the following steps in sequence:

1. Eliminate the chances of a fall by doing as much of the preparation work as possible on the ground.
2. Isolate the worker from the risk of a fall by using scaffolds and edge protection to prevent the fall.
3. Only when these steps are not achievable should the risk be minimised by the use of a fall restraint or a fall protection system such as safety nets or airbags.

In some situations a combination of controls will be required to ensure safe work.

Where to stand

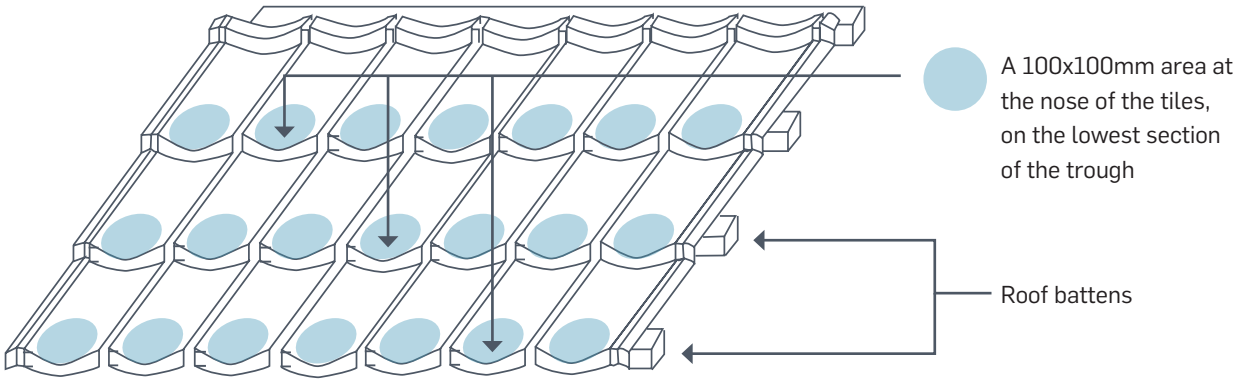

This document is produced in the interest of customer education and good customer relations. Gerard Roofs has endeavoured to provide the most technically correct and up to date advice possible but, subject to claims a person may have under New Zealand legislation, assumes no responsibility in relation to such information or advice. Alteration in the specification or instructions may occur from time to time.

Please contact Gerard Roofs for the most up to date technical advice available prior to using this information.

Gerard Roofs, PO Box 18071, Glen Innes, Auckland 1743, New Zealand.
Freephone 0800 100 244 www.gerardroofs.co.nz

GERARD
Roofing Designed to Endure

4710EW Earthwool Glasswool Insulation

Knauf Insulation New Zealand
+64 0800 562834
tech.nz@knaufinsulation.com
http://www.knaufinsulation.co.nz/

KDC - Approved Building Consent Document - BC210441 - Pg 160 of 512 - 30/08/2021 - ComplyNZ

SUPPORTING DOCUMENTS

Datasheet - Earthwool glasswool - ceiling and roof rolls

Ref 11261. Uploaded 30 Aug 2020

Purpose: Performance

Datasheet - Earthwool glasswool - wall insulation

Ref 11263. Uploaded 30 Aug 2020

Purpose: Performance

Datasheet - Earthwool glasswool: acoustic insulation (internal walls, midfloors, susp ceilings)

Ref 11260. Uploaded 30 Aug 2020

Purpose: Performance

Earthwool® glasswool insulation acoustic batts 104858

Ref 10105. Uploaded 26 Jun 2020

Purpose: Installation, Maintenance, Environmental

Earthwool® glasswool insulation ceiling roll 104859

Ref 10106. Uploaded 26 Jun 2020

Purpose: Installation, Maintenance, Environmental

Earthwool® glasswool insulation wall batts 104856

Ref 10108. Uploaded 26 Jun 2020

Purpose: Installation, Maintenance, Environmental

Installation instructions - Earthwool glasswool - ceiling rolls/roof blanket

Ref 11389. Uploaded 31 Aug 2020

Purpose: Installation

Installation instructions - Earthwool glasswool - ceiling segments

Ref 11378. Uploaded 31 Aug 2020

Purpose: Installation

Installation instructions - Earthwool glasswool - wall

Ref 11393. Uploaded 31 Aug 2020

Purpose: Installation

KDC - Approved Building Consent Document - BC210441 - Pg 161 of 512 - 30/08/2021 - ComplyNZ

KNAUFINSULATION

www.knaufinsulation.co.nz

EARTHWOOL® GLASSWOOL INSULATION: ROOF BLANKET

May 2019

KDC - Approved Building Consent Document - BC210441 - Pg 162 of 512 - 30/08/2021 - ComplyNZ



with ECOSE® TECHNOLOGY

APPLICATIONS

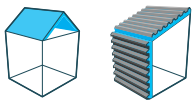

DESCRIPTION

Earthwool® glasswool insulation: roof blanket (unfaced) provides thermal and acoustic insulation for commercial roofs. Condensation control can be achieved when the product is faced with foil of the appropriate duty classification. Earthwool® glasswool insulation: roof blanket (unfaced) range includes a selection of R-Values to provide builders, designers and installers the opportunity to choose the best thermal performance for their project. Earthwool® glasswool insulation: roof blanket (unfaced) will improve the thermal comfort and energy efficiency of the building in which it has been installed thus keeping it cool in summer and warm in winter. Super-soft to handle and install, Earthwool® glasswool is made using up to 80% recycled glass and with ECOSE® Technology, a sustainable, bio-based binder that contains no added formaldehyde.

PERFORMANCE

Thermal	
Thermal conductivity: Thermal resistance:	ASTM C 518 and AS/NZS 4859.1: 2002. ASTM C 653 and AS/NZS 4859.1: 2002.
Fire Hazard Properties (AS/NZ 1530.3)	Ignitability: 0, Spread of Flame: 0, Heat Evolved: 0, Smoke Developed: 0-1.
Water Vapour Absorption	Less than 5% by weight.
Microbial Growth	Does not support microbial growth.
Corrosion Resistance	No greater than sterile cotton.
Combustibility (AS 1530.1)	Non-combustible.

BENEFITS

- High thermal performance - year round comfort
- Sound absorbing
- Non-combustible
- Saves energy - lower energy bills
- No added formaldehyde
- Soft to handle and install
- 50 year warranty
- Compression packed - more product per pack
- Odourless.

CERTIFICATION

challenge. create. care.

KNAUFINSULATION

www.knaufinsulation.co.nz

EARTHWOOL® GLASSWOOL INSULATION: ROOF BLANKET

May 2019

KDC - Approved Building Consent Document - BC210441 - Pg 163 of 512 - 30/08/2021 - ComplyNZ

ADDITIONAL INFORMATION

Specification Guide

The roof insulation shall be Earthwool® glasswool insulation: roof blanket R*, *mm thick, BRANZ appraised to meet the provisions of the NZBC. The product will be non-combustible, CFC/HCFC free, zero ODP and GWP, Global GreenTag Cert™ Level A certified, glasswool insulation with high post-consumer recycled glass content and with ECOSE® Technology. It will be manufactured under Quality Assurance Standards ISO 9001:2008 and ISO 14001:2004 by Knauf Insulation and shall be installed in accordance with the instructions issued by them.
* Architect to insert details of products used.

Specification Compliance

AS/NZS 4859.1: 2002 Materials used in the Thermal Insulation of Buildings and comply with the New Zealand Building Code requirements: B2 – Durability, E3 – External Moisture, F2 – Hazardous Building Materials, and H1 – Energy Efficiency, as appraised by BRANZ. Earthwool® glasswool insulation: roof blanket is an acceptable solution in terms of the New Zealand Building Code.

Bio-solubility

The formulation used for Earthwool® glasswool insulation has been independently assessed to meet the requirements of the stringent Note Q standard (and is therefore consistent with the highest Australian and New Zealand industry standards), and also assessed by Knauf Insulation against the criteria of the Australian Safety and Compensation Council ASCC Approved Criteria for Classifying Hazardous Substances [NOHSC: 1008 3rd Edition]. As a result of this assessment, Earthwool® glasswool insulation is not classified as hazardous according to the NOHSC criteria.

Environmental

Earthwool® glasswool insulation: roof blanket represents no known threat to the environment and have zero Ozone Depletion Potential and zero Global Warming Potential.

Proven Performance

- Preferred by professional installers concerned with quality, appearance and productivity.
- Excellent acoustical properties reduce sound transmission in the home when properly installed in walls, ceiling and floor systems.

Durability

- Earthwool® glasswool insulation is odourless, rot proof, non-hygroscopic, does not sustain vermin and will not encourage the growth of fungi, mould or bacteria.

Superior Handling

- Highly resilient insulation recovers quickly to full thickness for a snug fit and superior finished aesthetics.
- Consistent quality materials feel good, cut easily and install fast.
- Low dust for easier handling and increased productivity.

Convenient Packaging, Easier Handling

- Earthwool® glasswool insulation is packaged in a strong, white poly film that offers excellent protection from abuse, dust and moisture.
- Earthwool® glasswool insulation packages feature easy to follow installation instructions.
- MasterBag insulation units (containing multiple packs) ensure reduced handling costs with improved compression – more square metres per bag, more square metres per truck load, fewer trips to the job site and less warehouse space for storage.

Superior Service and Support

- Knauf Insulation is focused on providing first class customer service, producing high quality products and 'in full on time' deliveries.
- Knauf Insulation recognises the need to establish, develop and support a professional network of distributors and re-sellers in order to service a growing insulation market.
- Knauf Insulation is committed to providing a comprehensive range of relevant sales and marketing literature and web-based technical information to support specifiers and customers.

challenge.
create.
care.

KNAUFINSULATION

www.knaufinsulation.co.nz

EARTHWOOL® GLASSWOOL INSULATION: ROOF BLANKET

May 2019

KDC - Approved Building Consent Document - BC210441 - Pg 164 of 512 - 30/08/2021 - ComplyNZ

SPECIFICATIONS

Product Code	R-Value (m^2K/W)	Thickness (mm)	Width (mm)	Length (mm)	Pieces per pack	Area per pack (m^2)	Packs per MasterBag	MasterBags per Supakube
70311	1.8	70	1200	13500	1	16.2	4	6
70313	2.9	115	1200	8500	1	10.2	4	6
70315	3.2	135	1200	8000	1	9.6	4	6
70317	3.6	150	1200	7000	1	8.4	4	6

with ECOSE® TECHNOLOGY

Earthwool® glasswool products made with ECOSE® Technology benefit from a no added formaldehyde binder, which is less energy intensive than traditional binders and is based on rapidly renewable, bio-based materials instead of petro-based chemicals. The technology has been developed for Knauf Insulation's glass and rock mineral wool products, enhancing their environmental credentials without affecting the thermal, acoustic or fire performance. Earthwool® glasswool products made with ECOSE® Technology contain no added dyes or artificial colours.

Knauf Insulation Ltd

PO Box 217 063, Botany Junction,
Auckland, 2013, New Zealand

Customer Service: Tel: 0800 562 834
Fax: +61 7 3902 0613

Technical Advisory Centre: tech.nz@knaufinsulation.com

All rights reserved, including those of photomechanical reproduction and storage in electronic media. Extreme caution was observed when putting together and processing the information, texts and illustrations in this document. Nevertheless, errors cannot quite be ruled out. The publisher and editors cannot assume legal responsibility or any liability whatever for incorrect information and the consequences thereof. The publisher and editors will be grateful for improvement suggestions and details of possible errors pointed out.

challenge.
create.
care.

KINZ0914115DS

Updated June 2019

KNAUFINSULATION

www.knaufinsulation.co.nz

EARTHWOOL® GLASSWOOL INSULATION: EXTERNAL WALL

May 2020

KDC - Approved Building Consent Document - BC210441 - Pg 165 of 512 - 30/08/2021 - ComplyNZ



with ECOSE® TECHNOLOGY

APPLICATIONS



DESCRIPTION

The Earthwool® glasswool insulation: external wall batt range includes a selection of R-Values and densities to provide builders, designers, installers and DIYers the opportunity to choose the best thermal and acoustic performance for their project. Earthwool® glasswool insulation: external wall batt will absorb the transfer of unwanted sound from outside to inside the building. In addition to sound absorption, Earthwool® glasswool insulation: external wall batt will improve the thermal comfort and energy efficiency of the building in which it has been installed thus keeping it cool in summer and warm in winter. Super-soft to handle and install, Earthwool® glasswool is made using up to 80% recycled glass and with ECOSE® Technology, a sustainable, bio-based binder that contains no added formaldehyde.

PERFORMANCE

Thermal	
Thermal conductivity: Thermal resistance:	ASTM C 518 and AS/NZS 4859.1: 2002. ASTM C 653 and AS/NZS 4859.1: 2002.
Fire Hazard Properties (AS/NZ 1530.3)	Ignitability: 0, Spread of Flame: 0, Heat Evolved: 0, Smoke Developed: 0-1.
Water Vapour Absorption	Less than 5% by weight.
Microbial Growth	Does not support microbial growth.
Corrosion Resistance	No greater than sterile cotton.
Combustibility (AS 1530.1)	Non-combustible.

BENEFITS

- High thermal performance - year round comfort
- Sound absorbing
- Non-combustible
- Saves energy - lower energy bills
- No added formaldehyde
- Soft to handle and install
- 50 year warranty
- Compression packed - more product per pack
- Odourless.

CERTIFICATION

challenge. create. care.

KNAUFINSULATION

www.knaufinsulation.co.nz

EARTHWOOL® GLASSWOOL INSULATION: EXTERNAL WALL

May 2020

KDC - Approved Building Consent Document - BC210441 - Pg 166 of 512 - 30/08/2021 - ComplyNZ

ADDITIONAL INFORMATION

Specification Guide

The wall insulation shall be Earthwool® glasswool insulation: external wall batt R*, *mm thick, BRANZ appraised to meet the provisions of the NZBC. The product will be non-combustible, CFC/HCFC free, zero ODP and GWP, Global GreenTag Cert™ Level A certified, glasswool insulation with high post-consumer recycled glass content and with ECOSE® Technology. It will be manufactured under Quality Assurance Standards ISO 9001:2008 and ISO 14001:2004 by Knauf Insulation and shall be installed in accordance with the instructions issued by them.
* Architect to insert details of products used.

Specification Compliance

AS/NZS 4859.1: 2002 Materials used in the Thermal Insulation of Buildings and comply with the New Zealand Building Code requirements: B2 – Durability, E2 – External Moisture, F2 – Hazardous Building Materials, and H1 – Energy Efficiency, as appraised by BRANZ. The Earthwool® glasswool insulation: external wall batt range is an acceptable solution in terms of the New Zealand Building Code. This product is designed for use in timber and metal frame applications in new and existing domestic and commercial buildings.

Bio-solubility

The formulation used for Earthwool® glasswool insulation has been independently assessed to meet the requirements of the stringent Note Q standard (and is therefore consistent with the highest Australian and New Zealand industry standards), and also assessed by Knauf Insulation against the criteria of the Australian Safety and Compensation Council ASCC Approved Criteria for Classifying Hazardous Substances [NOHSC: 1008 3rd Edition]. As a result of this assessment, Earthwool® glasswool insulation is not classified as hazardous according to the NOHSC criteria.

Environmental

Earthwool® glasswool insulation: external wall batt represents no known threat to the environment and have zero Ozone Depletion Potential and zero Global Warming Potential.

Proven Performance

- Preferred by professional installers concerned with quality, appearance and productivity.
- Excellent acoustical properties reduce sound transmission in the home when properly installed in walls, ceiling and floor systems.

Durability

- Earthwool® glasswool insulation is odourless, rot proof, non-hygroscopic, does not sustain vermin and will not encourage the growth of fungi, mould or bacteria.

Superior Handling

- Highly resilient insulation recovers quickly to full thickness for a snug fit and superior finished aesthetics.
- Consistent quality materials feel good, cut easily and install fast.
- Low dust for easier handling and increased productivity.

Convenient Packaging, Easier Handling

- Earthwool® glasswool insulation is packaged in a strong, white poly bag that offers excellent protection from abuse, dust and moisture.
- Earthwool® glasswool insulation packages feature easy to follow installation instructions.
- MasterBag insulation units (containing multiple packs) ensure reduced handling costs with improved compression – more square metres per bag, more square metres per truck load, fewer trips to the job site and less warehouse space for storage.

Superior Service and Support

- Knauf Insulation is focused on providing first class customer service, producing high quality products and 'in full on time' deliveries.
- Knauf Insulation recognises the need to establish, develop and support a professional network of distributors and re-sellers in order to service a growing insulation market.
- Knauf Insulation is committed to providing a comprehensive range of relevant sales and marketing literature and web-based technical information to support specifiers and customers.

KNAUF INSULATION

www.knaufinsulation.co.nz

EARTHWOOL® GLASSWOOL INSULATION: EXTERNAL WALL

May 2020

KDC - Approved Building Consent Document - BC210441 - Pg 167 of 512 - 30/08/2021 - ComplyNZ

SPECIFICATIONS

Product Code	R-Value (m^2K/W)	Thickness (mm)	Width (mm)	Length (mm)	Pieces per pack	Area per pack (m^2)	Packs per MasterBag	MasterBags per Supakube
71045	1.4	50	580	1160	38	25.57	4	4
71038	2.2	90	580	1160	29	19.51	4	4
71039	2.4	90	580	1160	20	13.46	4	4
71070	2.6	90	430	1160	14	6.98	5	5
71071	2.6	90	580	1160	14	9.42	4	4
71040	2.8	90	430	1160	10	4.99	5	5
71041	2.8	90	580	1160	10	6.73	4	4
71042	3.2	140	580	1160	22	14.80	4	4
70319	3.6	140	580	1160	15	10.10	4	4
05604	4.1	140	580	1160	9	6.10	4	4

mber frame

Product Code	R-Value (m^2K/W)	Thickness (mm)	Width (mm)	Length (mm)	Pieces per pack	Area per pack (m^2)	Packs per MasterBag	MasterBags per Supakube
29446	1.3	50	600	2700	20	32.40	4	4
29447	1.9	75	600	2700	14	22.68	4	4

etal frame

with ECOSE® TECHNOLOGY

Earthwool® glasswool products made with ECOSE® Technology benefit from a no added formaldehyde binder, which is less energy intensive than traditional binders and is based on rapidly renewable, bio-based materials instead of petro-based chemicals. The technology has been developed for Knauf Insulation's glass and rock mineral wool products, enhancing their environmental credentials without affecting the thermal, acoustic or fire performance. Earthwool® glasswool products made with ECOSE® Technology contain no added dyes or artificial colours.

Knauf Insulation Ltd

PO Box 217 063, Botany Junction,
Auckland, 2013, New Zealand

Customer Service: Tel: 0800 562 834
Fax: +61 7 3902 0613

Technical Advisory Centre: tech.nz@knaufinsulation.com

All rights reserved, including those of photomechanical reproduction and storage in electronic media. Extreme caution was observed when putting together and processing the information, texts and illustrations in this document. Nevertheless, errors cannot quite be ruled out. The publisher and editors cannot assume legal responsibility or any liability whatever for incorrect information and the consequences thereof. The publisher and editors will be grateful for improvement suggestions and details of possible errors pointed out.

challenge.
create.
care.

KINZ0914114DS

Updated May 2020

KNAUFINSULATION

www.knaufinsulation.co.nz

EARTHWOOL® GLASSWOOL INSULATION: INTERNAL (ACOUSTIC) WALL

May 2019

KDC - Approved Building Consent Document - BC210441 - Pg 168 of 512 - 30/08/2021 - ComplyNZ



with ECOSE® TECHNOLOGY

APPLICATIONS



DESCRIPTION

The Earthwool® glasswool insulation: internal (acoustic) wall batt range includes a selection of densities to provide builders, designers, installers and DIYers the opportunity to choose the best acoustic performance for their project. Earthwool® glasswool insulation: internal (acoustic) wall batt will improve the acoustic performance of the building in which it has been installed by absorbing the transfer of unwanted sound from external sources and between adjoining rooms. Super-soft to handle and install, Earthwool® glasswool insulation is made using up to 80% recycled glass and with ECOSE® Technology, a sustainable, bio-based binder that contains no added formaldehyde.

PERFORMANCE

Thermal	
Thermal conductivity: Thermal resistance:	ASTM C 518 and AS/NZS 4859.1: 2002. ASTM C 653 and AS/NZS 4859.1: 2002.
Fire Hazard Properties (AS/NZ 1530.3)	Ignitability: 0, Spread of Flame: 0, Heat Evolved: 0, Smoke Developed: 0-1.
Water Vapour Absorption	Less than 5% by weight.
Microbial Growth	Does not support microbial growth.
Corrosion Resistance	No greater than sterile cotton.
Combustibility (AS 1530.1)	Non-combustible.

BENEFITS

- Sound absorbing
- High thermal performance - year round comfort
- Non - combustible
- Saves energy - lower energy bills
- No added formaldehyde
- Soft to handle and install
- 50 year warranty
- Compression packed - more product per pack
- Odourless.

CERTIFICATION

CodeMark 30095

BRANZ Appraised Appraisal No.648 (2016) Wall, Ceiling and Acoustic

challenge. create. care.

KNAUFINSULATION

www.knaufinsulation.co.nz

EARTHWOOL® GLASSWOOL INSULATION: INTERNAL (ACOUSTIC) WALL

May 2019

KDC - Approved Building Consent Document - BC210441 - Pg 169 of 512 - 30/08/2021 - ComplyNZ

ADDITIONAL INFORMATION

Specification Guide

The acoustic insulation shall be Earthwool® glasswool insulation: internal (acoustic) wall batt *kg/m^3, *mm thick, BRANZ appraised to meet the provisions of the NZBC. The product will be non-combustible, CFC/HCFC free, zero ODP and GWP, Global GreenTag Cert™ Level A certified, glasswool insulation with high post-consumer recycled glass content and with ECOSE® Technology. It will be manufactured under Quality Assurance Standards ISO 9001:2008 and ISO 14001:2004 by Knauf Insulation and shall be installed in accordance with the instructions issued by them.
*Architect to insert details of products used.

Light Commercial Applications

Earthwool® glasswool insulation: internal (acoustic) wall batt is available in a range of thicknesses. Earthwool® glasswool insulation: internal (acoustic) wall batt can improve Rw ratings in wood stud construction by 3 to 5 points and in metal stud construction by 8 to 10 points, depending on the complexity of the wall configuration and the thickness/density. Earthwool® glasswool insulation: internal (acoustic) wall batt can be used for exterior and interior walls, floors, crawlspaces and a variety of ceiling applications.

Specification Compliance

AS/NZS 4859.1: 2002 Materials used in the Thermal Insulation of Buildings and comply with the Building Code of Australia (BCA) requirements: B2 - Durability, E2 - External Moisture, F2 - Hazardous Building Materials, and H1 - Energy Efficiency. The Earthwool® glasswool: internal (acoustic) wall batt range is an acceptable solution in terms of the New Zealand Building Code. This product is designed for use in timber and metal frame applications in new and existing domestic and commercial buildings.

Bio-solubility

The formulation used for Earthwool® glasswool insulation has been independently assessed to meet the requirements of the stringent Note Q standard (and is therefore consistent with the highest Australian and New Zealand industry standards), and also assessed by Knauf Insulation against the criteria of the Australian Safety and Compensation Council ASCC Approved Criteria for Classifying Hazardous Substances [NOHSC: 1008 3rd Edition]. As a result of this assessment, Earthwool® glasswool insulation is not classified as hazardous according to the NOHSC criteria.

Environmental

Earthwool® glasswool insulation: internal (acoustic) wall batt represents no known threat to the environment and have zero Ozone Depletion Potential and zero Global Warming Potential.

Proven Performance

- Preferred by professional installers concerned with quality, appearance and productivity.
- Excellent acoustical properties reduce sound transmission in the home when properly installed in walls, ceiling and floor systems.

Durability

- Earthwool® glasswool insulation is odourless, rot proof, non-hygroscopic, does not sustain vermin and will not encourage the growth of fungi, mould or bacteria.

Superior Handling

- Highly resilient insulation recovers quickly to full thickness for a snug fit and superior finished aesthetics.
- Consistent quality materials feel good, cut easily and install fast.
- Low dust for easier handling and increased productivity.

Convenient Packaging, Easier Handling

- Earthwool® glasswool insulation is packaged in a strong, white poly bag that offers excellent protection from abuse, dust and moisture.
- Earthwool® glasswool insulation packages feature easy to follow installation instructions.
- MasterBag insulation units (containing multiple packs) ensure reduced handling costs with improved compression – more square metres per bag, more square metres per truck load, fewer trips to the job site and less warehouse space for storage.

Superior Service and Support

- Knauf Insulation is focused on providing first class customer service, producing high quality product and 'in full on time' deliveries.
- Knauf Insulation recognises the need to establish, develop and support a professional network of distributors and re-sellers in order to service a growing insulation market.
- Knauf Insulation is committed to providing a comprehensive range of relevant sales and marketing literature and web-based technical information to support specifiers and customers.

challenge.
create.
care.

KNAUFINSULATION

www.knaufinsulation.co.nz

EARTHWOOL® GLASSWOOL INSULATION: INTERNAL (ACOUSTIC) WALL

May 2019

KDC - Approved Building Consent Document - BC210441 - Pg 170 of 512 - 30/08/2021 - ComplyNZ

SPECIFICATIONS

roduct ode	R-Value (m^2K/W)	Density (kg/m^3)	Thickness (mm)	Width (mm)	Length (mm)	Pieces per Pack	Area per pack (m^2)
71045	1.4	14	50	580	1160	38	25.57
71049	2.0	14	75	580	1160	24	16.15
71070	2.6	20	90	430	1160	14	6.98
71071	2.6	20	90	580	1160	14	9.42
71040	2.8	27	90	430	1160	10	4.99
71041	2.8	27	90	580	1160	10	6.73

mber frame

roduct ode	R-Value (m^2K/W)	Density (kg/m^3)	Thickness (mm)	Width (mm)	Length (mm)	Pieces per Pack	Area per pack (m^2)
29446	1.3	11	50	600	2700	20	32.40
29447	1.9	11	75	600	2700	14	22.70

etal frame

roduct ode	R-Value (m^2K/W)	Density (kg/m^3)	Thickness (mm)	Width (mm)	Length (mm)	Pieces per Pack	Area per pack (m^2)
	2.0	14	75	430	1160	24	11.97

affle stack

with ECOSE® TECHNOLOGY

Earthwool® glasswool products made with ECOSE® Technology benefit from a no added formaldehyde binder, which is less energy intensive than traditional binders and is based on rapidly renewable, bio-based materials instead of petro-based chemicals. The technology has been developed for Knauf Insulation's glass and rock mineral wool products, enhancing their environmental credentials without affecting the thermal, acoustic or fire performance. Earthwool® glasswool products made with ECOSE® Technology contain no added dyes or artificial colours.

Knauf Insulation Ltd

PO Box 217 063, Botany Junction,
Auckland, 2013, New Zealand

Customer Service: Tel: 0800 562 834
Fax: +61 7 3902 0613

Technical Advisory Centre: tech.nz@knaufinsulation.com

All rights reserved, including those of photomechanical reproduction and storage in electronic media. Extreme caution was observed when putting together and processing the information, texts and illustrations in this document. Nevertheless, errors cannot quite be ruled out. The publisher and editors cannot assume legal responsibility or any liability whatever for incorrect information and the consequences thereof. The publisher and editors will be grateful for improvement suggestions and details of possible errors pointed out.

challenge.
create.
care.

KINZ0914116DS

Updated June 2019

Earthwool® glasswool insulation acoustic batts

Product Technical Statement: 104858

miproducts
THE NATIONAL PRODUCT DATABASE

Earthwool® glasswool insulation: Acoustic batts provide high acoustic performance.
View miproducts listing

KDC - Approved Building Consent Document - BC210441 - Pg 171 of 512 - 30/08/2021 - ComplyNZ

Level of assurance needed to demonstrate NZ Building Code Compliance
Supporting documentation should include self-assessment and technical information by manufacturer

LOW

Earthwool® glasswool insulation confirms that this minimum level of assurance has been met or exceeded by the following:
BRANZ Appraisal
648





masterspec partner

Technical Statement

Product Description

The Earthwool® glasswool insulation: Internal wall batt range is a new generation of softer, safer and more environmentally friendly glasswool insulation.

This specialist acoustic range of products is available in an Ultra Performance 14kg/m³ density.

Earthwool® glasswool insulation: Internal wall batts reduce unwanted noise from outside and also limit sound transmission from room to room or office to office.

E-Code	Density (kg/m³)	Thickness (mm)	R-Value (est)	Width (mm)	Length (mm)	m²/ Pack
E2890	14	50	1.4	430	1160	19.0
E2905	14	50	1.4	580	1160	25.6
E3094	14	75	2.0	430	1160	12.0
E3088	14	75	2.0	580	1160	16.2
E4332	20	90	2.6	430	1160	6.9
E4333	20	90	2.6	580	1160	9.4
E4473	27	90	2.8	430	1160	4.9
E4335	27	90	2.8	580	1160	6.7

Scope of use

Supply and install the selected Earthwool® glasswool insulation to walls, floors, ceilings, roofs and other areas as identified on the drawings, complete with accessories.

All aspects of this work shall be in complete accordance with Knauf Insulation product manuals and installation guides, (check www.knaufinsulation.co.nz, or call 0800 562 834 for the latest editions), Earthwool® glasswool insulation BRANZ Appraisal, other relevant product manufacturers' recommendations, and as shown on the drawings.

No substitutions are permitted for Earthwool® glasswool insulation.

New Zealand Building Code (NZBC)

The product will, if employed in accordance with the supplier's installation and maintenance requirements, assist with meeting the following provisions of the building code:

- **Clause B2 Durability:** Performance B2.3.1(a)
- **Clause E3 Internal moisture:** Performance E3.3.1
- **Clause F2 Hazardous building materials:** Performance F2.3.1
- **Clause H1 Energy efficiency :** Performance H1.3.1

Evidence

The product meets the requirements set out in the following documents, or relevant parts of cited standards within the documents:

Earthwool glasswool insulation is an Acceptable Solution in terms of New Zealand Building Code Compliance.

Earthwool glasswool insulation thermal resistance (R-value) has been determined by testing to AS/NZS 4859.1 which is an acceptable method.

Supporting Evidence

The product has and can make available the following additional evidence to support the above statements:

BRANZ Appraisal
648

Company Contact Details

EARTHWOOL
the feel good glasswool insulation
GLASSWOOL

Brand:	Earthwool® glasswool insulation
Company:	Knauf Insulation New Zealand
Physical Address:	PO Box 217 063 Auckland
Postal Address:	PO Box 217 063 Botany Junction Auckland
Email:	tech.nz@knaufinsulation.com
Website:	http://www.knaufinsulation.co.nz

Earthwool® glasswool insulation acoustic batts

Product Technical Statement: 104858

miproducts
THE NATIONAL PRODUCT DATABASE

KDC - Approved Building Consent Document - BC210441 - Pg 172 of 512 - 30/08/2021 - ComplyNZ

Product Criteria

Design requirements

Earthwool glasswool insulation: Internal wall segments provide a cost-effective thermal and acoustic barrier for energy-efficient construction. The consistent quality, low dust, and clean-cutting resilient fibres make fabrication easy and installation fast. Earthwool glasswool insulation: Internal wall segments can be used in timber and metal frame applications in residential structures.

These applications include thermal and acoustic treatments to walls, ceilings and floors. Knauf Insulation offers Earthwool glasswool insulation: Internal wall segments in a wide range of sizes and R-values.

Earthwool glasswool insulation can be used for cavity walls, floors, ceilings, attics, basements and crawlspaces. It is highly resilient, recovering quickly to full thickness. It also greatly reduces the transmission of noise in the home.

Installation requirements

Installation of Earthwool glasswool insulation must be completed by an installer with an understanding of insulation installation, in accordance with the instructions given within the Technical Literature, Installation Instructions and BRANZ Appraisal.

Installation of Earthwool glasswool insulation must be in accordance with the Knauf Insulation's Technical Literature, Installation Instructions and BRANZ Appraisal. NZS 4246 should be used as a guide for installing insulation in residential buildings in New Zealand

The product must be installed only when the building is enclosed and when the construction materials have achieved the required maximum moisture content or less, to ensure the insulation does not become wet

Maintenance requirements

The building must be maintained weatherproof at all times.

If, during normal routine maintenance it is discovered that moisture has entered the building envelope, or that dampness has occurred because of leaking plumbing or some other source, then that source must be repaired immediately.

Wet or damp insulation must be removed and then replaced with new insulation of an equivalent acoustic rating. Cavities must be clean, dry and free of all contaminants and mould before fitting new insulation.

NZS 4246 Paragraph 3.3 gives guidance on thermal insulation maintenance due to water damage.

Company Product Information

Environmental

Earthwool glasswool insulation: Internal wall segments are free from CFCs, HCFCs and any other material with ozone depletion potential in its manufacture and content and represents no known threat to the environment.

Earthwool glasswool insulation: Internal wall segments' manufacture has a low impact on the environment and is classified as Zero ODP and Zero GWP.

Knauf Insulation mineral wool products with ECOSE Technology benefit from a revolutionary, bio-based, formaldehyde-free binder technology, based on rapidly renewable materials, instead of petro-based chemicals. It reduces embodied energy and delivers superior environmental sustainability.

The technology has been developed for Knauf Insulation's glass and rock mineral wool products, enhancing their environmental credentials without affecting the thermal, acoustic or fire performance. Insulation products made with ECOSE Technology contain no dye or artificial colours - the colour is completely natural.

Quality Assurance

ISO 9001 (Quality Management)

Relationships

Member of New Zealand Green Building Council

EcoSpecifier Global GreenTag Level A

Date last validated: **20 July 2018**

Date last updated: **20 July 2018**

Earthwool® glasswool insulation acoustic batts

Product Technical Statement: 104858

Disclaimer: The Product Technical Statement (PTS) template is copyright to Construction Information Limited. However the content of this PTS is the responsibility of the product manufacturer/supplier. Refer to the miproducts Terms and Conditions

KDC - Approved Building Consent Document - BC210441 - Pg 173 of 512 - 30/08/2021 - ComplyNZ

Earthwool® glasswool insulation ceiling roll

Product Technical Statement: 104859

miproducts
THE NATIONAL PRODUCT DATABASE

KDC - Approved Building Consent Document - BC210441 - Pg 174 of 512 - 30/08/2021 - ComplyNZ

Earthwool® glasswool is made using recycled glass and with ECOSE® Technology.
View miproducts listing

Level of assurance needed to demonstrate NZ Building Code Compliance
LOW
Supporting documentation should include self-assessment and technical information by manufacturer

Earthwool® glasswool insulation confirms that this minimum level of assurance has been met or exceeded by the following:
BRANZ Appraisal
648





masterspec partner

Company Contact Details

EARTHWOOL
the feel good glasswool insulation
GLASSWOOL

Brand:	Earthwool® glasswool insulation
Company:	Knauf Insulation New Zealand
Physical Address:	PO Box 217 063 Auckland
Postal Address:	PO Box 217 063 Botany Junction Auckland
Email:	tech.nz@knaufinsulation.com
Website:	http://www.knaufinsulation.co.nz

Technical Statement

Product Description

Earthwool® glasswool insulation: Ceiling roll is an ideal solution for thermal and acoustic insulation of both residential and commercial roofs.

Condensation control can be achieved when the product is faced with a foil of the appropriate duty classification.

E-Code	R-Value	Thickness (mm)	Width (mm)	Length (mm)	m²/Pack
E4487	1.8	70	1200	13,500	16.2
E4488	2.9	115	1200	8,500	10.2
E4489	3.2	135	1200	8,000	9.6
E4490	3.6	150	1200	7,000	8.4

Scope of use

Supply and install the selected Earthwool® glasswool insulation to walls, floors, ceilings, roofs and other areas as identified on the drawings, complete with accessories.

All aspects of this work shall be in complete accordance with Knauf Insulation product manuals and installation guides, (check www.knaufinsulation.co.nz, or call 0800 562 834 for the latest editions), Earthwool® glasswool insulation BRANZ Appraisal, other relevant product manufacturers' recommendations, and as shown on the drawings.

No substitutions are permitted for Earthwool® glasswool insulation.

New Zealand Building Code (NZBC)

The product will, if employed in accordance with the supplier's installation and maintenance requirements, assist with meeting the following provisions of the building code:

- **Clause B2 Durability:** Performance B2.3.1(a), B2.3.1(b)
- **Clause E3 Internal moisture:** Performance E3.3.1
- **Clause F2 Hazardous building materials:** Performance F2.3.1
- **Clause H1 Energy efficiency :** Performance H1.3.1, H1.3.2E

Evidence

The product meets the requirements set out in the following documents, or relevant parts of cited standards within the documents:

Earthwool glasswool insulation is an Acceptable Solution in terms of New Zealand Building Code Compliance.

Earthwool glasswool insulation thermal resistance (R-value) has been determined by testing to AS/NZS 4859.1 which is an acceptable method.

Supporting Evidence

The product has and can make available the following additional evidence to support the above statements:

BRANZ Appraisal
648

Product Criteria

Design requirements

Earthwool glasswool insulation: Roof blankets provide a cost-effective thermal and acoustic barrier for energy-efficient construction. The consistent quality, low dust, and clean-cutting

Earthwool® glasswool insulation ceiling roll

Product Technical Statement: 104859

KDC - Approved Building Consent Document - BC210441 - Pg 175 of 512 - 30/08/2021 - ComplyNZ

resilient fibres make fabrication easy and installation fast.

Earthwool glasswool insulation: Roof blankets can be used in timber and metal frame applications in residential structures. These applications include thermal and acoustic treatments to walls, ceilings and mid floors.

Knauf Insulation offers Earthwool glasswool insulation in a wide range of sizes and R-values. Earthwool glasswool insulation can be used for cavity walls, floors, ceilings, attics, basements and crawlspaces. It is highly resilient, recovering quickly to full thickness. It also greatly reduces the transmission of noise in the home.

Installation requirements

Installation of Earthwool glasswool insulation must be completed by an installer with an understanding of insulation installation, in accordance with the instructions given within the Technical Literature, Installation Instructions and BRANZ Appraisal.

Installation of Earthwool glasswool insulation must be in accordance with the Knauf Insulation's Technical Literature, Installation Instructions and BRANZ Appraisal.

NZS 4246 should be used as a guide for installing insulation in residential buildings in New Zealand.

The product must be installed only when the building is enclosed and when the construction materials have achieved the required maximum moisture content or less, to ensure the insulation does not become wet.

Maintenance requirements

The building must be maintained weatherproof at all times.

If, during normal routine maintenance it is discovered that moisture has entered the building envelope, or that dampness has occurred because of leaking plumbing or some other source, then that source must be repaired immediately.

Wet or damp insulation must be removed and then replaced with new insulation of an equivalent thermal rating.

Cavities must be clean, dry and free of all contaminants and mould before fitting new insulation.

NZS 4246 Paragraph 3.3 gives guidance on thermal insulation maintenance due to water damage.

Company Product Information

Environmental

Earthwool glasswool insulation: Roof blankets are free from CFCs, HCFCs and any other material with ozone depletion potential in its manufacture and content and represents no known threat to the environment.

Earthwool glasswool insulation: Roof blankets' manufacture has a low impact on the environment and is classified as Zero ODP and Zero GWP.

Knauf Insulation mineral wool products with ECOSE Technology benefit from a revolutionary, bio-based, formaldehyde-free binder technology, based on rapidly renewable materials, instead of petro-based chemicals. It reduces embodied energy and delivers superior environmental sustainability.

The technology has been developed for Knauf Insulation's glass and rock mineral wool products, enhancing their environmental credentials without affecting the thermal, acoustic or fire performance. Insulation products made with ECOSE Technology contain no dye or artificial colours - the colour is completely natural.

Quality Assurance

ISO 9001 (Quality Management)

Relationships

Member of New Zealand Green Building Council

EcoSpecifier Global GreenTag Level A

Date last validated: **20 July 2018**

Date last updated: **20 July 2018**

Disclaimer: The Product Technical Statement (PTS) template is copyright to Construction Information Limited. However the content of this PTS is the responsibility of the product manufacturer/supplier. Refer to the miproducts Terms and Conditions

Earthwool® glasswool insulation wall batts

Product Technical Statement: 104856

miproducts
THE NATIONAL PRODUCT DATABASE

KDC - Approved Building Consent Document - BC210441 - Pg 176 of 512 - 30/08/2021 - ComplyNZ

Earthwool® glasswool is made using recycled glass and with ECOSE® Technology.
View miproducts listing

Level of assurance needed to demonstrate NZ Building Code Compliance
LOW
Supporting documentation should include self-assessment and technical information by manufacturer

Earthwool® glasswool insulation confirms that this minimum level of assurance has been met or exceeded by the following:
BRANZ Appraisal
648





masterspec partner

Technical Statement

Product Description

The Earthwool® glasswool insulation: External wall batt range is a new generation of softer, safer and more environmentally friendly glasswool insulation.

Advanced compression packaging reduces handling time and the risk of damage in transit and on-site. Although the product is primarily designed for use in external walls it can also be used for internal walls to reduce sound transmission from room to room.

It is thermally efficient and cost effective in saving energy and providing increased comfort in buildings.

Segments are the traditional insulation product for insulating external walls and are available in thicknesses to suit 90mm and 140mm timber and metal frames.

Unlike reflective foil, Earthwoo® glasswool insulation: External wall segments prevent heat gain in summer and heat loss in winter by countering convection, conduction and radiation.

E-code	R-Value	Thickness (mm)	Width (mm)	Length (mm)	m²/Pack
E4330	2.2	90	580	1160	19.5
E4727	2.4	90	580	1160	13.4
E4332	2.6	90	430	1160	7.0
E4333	2.6	90	580	1160	9.4
E4473	2.8	90	430	1160	5.0
E4335	2.8	90	580	1160	6.7
E4340	3.2	140	580	1160	14.8

Scope of use

Supply and install the selected Earthwool® glasswool insulation to walls, floors, ceilings, roofs and other areas as identified on the drawings, complete with accessories.

All aspects of this work shall be in complete accordance with Knauf Insulation product manuals and installation guides, (check www.knaufinsulation.co.nz, or call 0800 562 834 for the latest editions), Earthwool® glasswool insulation BRANZ Appraisal, other relevant product manufacturers' recommendations, and as shown on the drawings.

No substitutions are permitted for Earthwool® glasswool insulation.

New Zealand Building Code (NZBC)

The product will, if employed in accordance with the supplier's installation and maintenance requirements, assist with meeting the following provisions of the building code:

- **Clause B2 Durability:** Performance B2.3.1(a)
- **Clause E3 Internal moisture:** Performance E3.3.1
- **Clause F2 Hazardous building materials:** Performance F2.3.1
- **Clause H1 Energy efficiency :** Performance H1.3.1

Evidence

The product meets the requirements set out in the following documents, or relevant parts of cited standards within the documents:

Earthwool glasswool insulation is an Acceptable Solution in terms of New Zealand Building Code Compliance.

Earthwool glasswool insulation thermal resistance (R-value) has been determined by testing to AS/NZS 4859.1 which is an acceptable method.

Supporting Evidence

Company Contact Details

EARTHWOOL GLASSWOOL
the feel good glasswool insulation

Brand:	Earthwool® glasswool insulation
Company:	Knauf Insulation New Zealand
Physical Address:	PO Box 217 063 Auckland
Postal Address:	PO Box 217 063 Botany Junction Auckland
Email:	tech.nz@knaufinsulation.com
Website:	http://www.knaufinsulation.co.nz

Earthwool® glasswool insulation wall batts

Product Technical Statement: 104856

miproducts
THE NATIONAL PRODUCT DATABASE

KDC - Approved Building Consent Document - BC210441 - Pg 177 of 512 - 30/08/2021 - ComplyNZ

The product has and can make available the following additional evidence to support the above statements:

BRANZ Appraisal
648

Product Criteria

Design requirements

Earthwool glasswool insulation: External wall segments provide a cost-effective thermal and acoustic barrier for energy-efficient construction.

The consistent quality, low dust, and clean-cutting resilient fibres make fabrication easy and installation fast.

Earthwool glasswool insulation: External wall segments can be used in timber and metal frame applications in residential structures. These applications include thermal and acoustic treatments to walls, ceilings and floors.

Knauf Insulation offers Earthwool glasswool insulation: External wall segments in a wide range of sizes and R-values.

Earthwool glasswool insulation can be used for cavity walls, floors, ceilings, attics, basements and crawlspaces. It is highly resilient, recovering quickly to full thickness. It also greatly reduces the transmission of noise in the home.

Installation requirements

Installation of Earthwool glasswool insulation must be completed by an installer with an understanding of insulation installation, in accordance with the instructions given within the Technical Literature, Installation Instructions and BRANZ Appraisal.

Installation of Earthwool glasswool insulation must be in accordance with the Knauf Insulation's Technical Literature, Installation Instructions and BRANZ Appraisal.

NZS 4246 should be used as a guide for installing insulation in residential buildings in New Zealand

The product must be installed only when the building is enclosed and when the construction materials have achieved the required maximum moisture content or less, to ensure the insulation does not become wet

Maintenance requirements

The building must be maintained weatherproof at all times.

If, during normal routine maintenance it is discovered that moisture has entered the building envelope, or that dampness has occurred because of leaking plumbing or some other source, then that source must be repaired immediately.

Wet or damp insulation must be removed and then replaced with new insulation of an equivalent thermal rating.

Cavities must be clean, dry and free of all contaminants and mould before fitting new insulation.

NZS 4246 Paragraph 3.3 gives guidance on thermal insulation maintenance due to water damage.

Company Product Information

Environmental

Earthwool glasswool insulation: External wall segments are free from CFCs, HCFCs and any other material with ozone depletion potential in its manufacture and content and represents no known threat to the environment.

Earthwool glasswool insulation: External wall segments' manufacture has a low impact on the environment and is classified as Zero ODP and Zero GWP.

Knauf Insulation mineral wool products with ECOSE Technology benefit from a revolutionary, bio-based, formaldehyde-free binder technology, based on rapidly renewable materials, instead of petro-based chemicals. It reduces embodied energy and delivers superior environmental sustainability.

The technology has been developed for Knauf Insulation's glass and rock mineral wool products, enhancing their environmental credentials without affecting the thermal, acoustic or fire performance. Insulation products made with ECOSE Technology contain no dye or artificial colours - the colour is completely natural

Quality Assurance

ISO 9001 (Quality Management)

Relationships

Earthwool® glasswool insulation wall batts

Product Technical Statement: 104856

miproducts
THE NATIONAL PRODUCT DATABASE

Member of New Zealand Green Building Council

EcoSpecifier Global GreenTag Level A

Videos

Wall Installation Video

Date last validated: **20 July 2018**

Date last updated: **20 July 2018**

Disclaimer: The Product Technical Statement (PTS) template is copyright to Construction Information Limited. However the content of this PTS is the responsibility of the product manufacturer/supplier. Refer to the miproducts Terms and Conditions

KDC - Approved Building Consent Document - BC210441 - Pg 178 of 512 - 30/08/2021 - ComplyNZ

KNAUF INSULATION

INSTALLATION INSTRUCTIONS

EARTHWOOL® GLASSWOOL INSULATION: CEILING

These instructions should be read in conjunction with local standards AS 3999 or NZS 4246 and all applicable local, state and federal building regulations. Before you start installing, please make sure you are familiar with our Health and Safety Information contained in this document. Ensure that you use tools and equipment that are suitable for the intended application. This will include suitable safety equipment.

Do not start work until the site is safe!

Assess the ceiling condition and structure together with the method of installation you are to use based on the appropriate requirements established in the building code, site assessment and or plans provided. Installation must be completed to the requirements of relevant standard: AS 3999 or NZS 4246.

Tools required:

- Sharp knife for trimming insulation
- Ladder
- Suitable clothing (see our Health and Safety Information)
- Tape measure
- Non-conductive insulation stick for positioning insulation in hard to reach areas
- Kneeling board to span ceiling framing

STEP 1

- Determine the most suitable product for your project. Ceilings can be insulated using blanket, rolls or segments.
- Where you have existing insulation that is level with the ceiling joists, you can install additional insulation over the top. It is recommended that this is installed at right angles to the existing insulation.
- Insulation is available in varying widths and thicknesses to suit most framing spaces. Please check Knauf Insulation's product guide for the most suitable product for your application.
- To calculate the number of packs needed, determine the area (m^2) to be insulated by multiplying the length by the width or wall height. The number of m^2 of insulation material is clearly marked on each pack. Divide the total area to be insulated by the m^2 in a pack to determine the number of packs required (don't forget to round up to the nearest whole pack). Allowances should be made for areas that are unable to be insulated.

STEP 2

- Don't take the insulation out of the packaging until you're in a position and ready to install.
- Before installation, gently agitate the insulation by gently shaking or bouncing it on its side until it recovers to the thickness stated on the label.
- Do not block ceiling vents and take care around downlights and other sources of heat. Consult the manufacturer's instructions for appropriate clearances. Additional guidance is provided in AS 3999 and NZS 4246.

STEP 3

- Start installing the insulation at the far corners of the ceiling and work your way back towards the ceiling access.
- When installing insulation between ceiling joists, ensure you achieve a snug fit, avoiding any gaps.
- When installing insulation in truss roofs, ensure that insulation is firmly butted together to achieve a consistent layer of insulation without any gaps.
- Where required, use a sharp knife to cut the insulation to fit. It is important that when you cut the insulation that you avoid coming into contact with any electrical services.
- When installing insulation in a roof eave (i.e. where the roof joins the ceiling), make sure the insulation covers the top plate but is not in contact with the roof. It is important to maintain a 20mm gap between the roofing substrate and the insulation.

STEP 4

- Complete the final check of the insulation ensuring all areas have been insulated and that you have an even and consistent layer of insulation.
- Finish your project by removing all packaging from the ceiling and disposing of all rubbish and excess insulation responsibly.

STEP 5

- Once you have worked your way back to the ceiling access, make sure you insulate the ceiling access panel before exiting the roof space.

We recommend that once completed another person checks the work to ensure it has been installed according to required standards.

KDC - Approved Building Consent Document - BC210441 - Pg 179 of 512 - 30/08/2021 - ComplyNZ

KNAUF INSULATION

HEALTH AND SAFETY INFORMATION

KDC - Approved Building Consent Document - BC210441 - Pg 180 of 512 - 30/08/2021 - ComplyNZ

SAFETY WARNINGS AND HAZARDS

- You must turn the mains power "Off" before entering the work space, and, if in any doubt about how to turn the power "Off", you must consult a licensed electrician.
- Working in areas that contain live electrical wiring is extremely hazardous. Take extreme care to avoid touching any live overhead electrical lines, supply cables or any other live cables in the workspace.
- Defective electrical cables, exposed terminals and conductors of electrical equipment such as light fittings and fans can cause burns and electric shocks please exercise caution when working near such hazards – check with an electrician if you are unsure if the cabling is safe.
- Working in hot and poorly ventilated areas when installing insulation can be dangerous.
- Working at heights, when installing insulation can be dangerous.

BEFORE INSTALLATION

- You must turn the mains power "Off" and, if in any doubt about how to turn the power "Off", consult a licensed electrician.
- Do not enter the workspace for the purposes of the pre-work inspection or the installation until you are satisfied that the power has been isolated. Even after isolating the power via the switchboard there may still be an electrical mains cable in either the ceiling or underfloor space that is live.
- Complete a pre-work assessment before installation to identify safety hazards which may include but are not limited to the following:
    - o access to the roof area,
    - o working at heights,
    - o electrical safety hazards,
    - o adequate ventilation of the work area and
    - o nails and sharp objects on the ground

- Before commencing work you must have systems in place to reduce risks identified in the pre-work assessment such as but which are not limited to:
    - o systems to prevent falling when working at heights.
    - o ventilate the working area if possible.
    - o cover exposed skin. When working in an unventilated area, wear a disposable face mask.
    - o rinse hands in cold water before washing.
    - o wear goggles when working overhead.
    - o clean using vacuum equipment.

DURING INSTALLATION

- Work with another person and maintain contact throughout both the assessment and installation process.
- Only open bags as required.
- Wear appropriate clothing for the job such as long sleeved top, flat rubber sole shoes, gloves conforming to Australian Standard AS2161 and ventilated non-fogging dust resistant goggles conforming to AS/NZ 1336, and a P2 dust mask.
- Avoid eye contact with dust or fibres to minimise eye or skin contact and inhalation during handling.
- Avoid installing insulation in hot weather and at the hottest part of the day.
- Under no circumstances must fixing devices in ceiling spaces or under floors, or in proximity to electrical wiring, be of metal or other conductive material.

Proven Performance

- Preferred by professional installers concerned with quality, appearance and productivity.
- Excellent acoustical properties reduce sound transmission in the home when properly installed.

HEALTH AND SAFETY INFORMATION

KDC - Approved Building Consent Document - BC210441 - Pg 181 of 512 - 30/08/2021 - ComplyNZ

ELECTRICAL SAFETY CONSIDERATIONS BEFORE ISOLATING POWER

- Locate and review the incoming power supply, main switchboard and meter box.
- Ensure you understand if there is a main isolator and how power can be safely isolated.
- Ensure you understand the direction of the "On" and "Off" position of the main switch (NOTE: the "Off" position is not always as it seems - check with an electrician if you are unsure).
- Before installation, switch "Off" the electricity supply at the main switchboard (check with an electrician if you are unsure if power can be turned "Off" at the switchboard).
- Be aware that even after isolating the power via the switchboard there may still be an electrical mains cable in either the ceiling or underfloor space that is live. Take extreme care to avoid touching any live overhead electrical lines, supply cables or any other live cables in the workspace.

PROCEDURE FOR ISOLATION - CERAMIC FUSES (IF IN DOUBT YOU MUST CONSULT A LICENSED ELECTRICIAN)

- Ceramic fuses are typically found in older style homes.
- Identify if any fuse is deactivated.
- Check if there are any fuses currently in the "Off" position, take note of them.
- Place a strip of electrical tape over main switch isolator after it is turned "Off".
- Apply additional strips of electrical tape over the deactivated fuse and any individual isolator in the "Off" position as a reminder to leaving it in the "Off" position once the re-activation procedure has been completed.
- If you find a fuse plug out of its socket, whilst the main isolator is in the "Off" position, place electrical tape over its respective switch and one over the fuse socket opening.
- DO NOT touch the internal metal fittings.
- Place a written note on the main isolator switch or meter box enclosure to advise the power is "Off" and WORK IN PROGRESS is occurring.
- Check to ensure the lights and appliances, within the home, previously left on are no longer operating to confirm the mains power is now isolated.
- The original person who placed the isolation tag is the only one who can re-activate the power. Advise occupants of this requirement.

PROCEDURE FOR ISOLATION CIRCUIT BOARD (IF IN DOUBT YOU MUST CONSULT A LICENSED ELECTRICIAN)

- Circuit boards are typically found in modern homes.
- Check if there are any switches currently in the "Off" position, take note of them.
- Place a strip of electrical tape over main switch isolator after it is turned "Off".
- Apply additional strips of electrical tape over any deactivated fuses or individual switches in the "Off" position after isolating the mains power as a reminder to leave it in the "Off" position once the re-activation procedure has been completed.
- Turn "Off" all individual switches on the circuit board.
- Place a written note on the switches or meter box enclosure to advise the power is "Off" and WORK IN PROGRESS is occurring.
- Check to ensure the lights and appliances within the home previously left on are no longer operating to confirm the mains power is now isolated.
- The originator that placed the isolation tag is the only one who can re-activate the power. Advise occupants of the requirement.

REACTIVATING THE POWER

- After the completion of the installation, switch the mains power to the "On" position (for ceramic fuse board), but for a circuit board, switch the main power "On" and then each individual power isolator on one at a time. The taped switches in the "Off" position should stay switched "Off".
- WARNING: If you cannot reconnect power please ensure you seek assistance from a qualified electrician.

SUITABLE CLOTHING

- When handling any insulation material, especially in enclosed poorly ventilated areas and/or overhead, the use of suitable eye protection conforming to AS1336 will greatly reduce contact with dust or fibres.
- Wear suitable loose fitting clothes, including long sleeved shirts, long pants, cap and gloves.
- A suitable dust mask is recommended when working in confined, poorly ventilated and dusty areas.
- Wash work clothes separately and rinse the washing machine after use.

challenge.
create.
care.

KNAUF INSULATION

INSTALLATION INSTRUCTIONS

KDC - Approved Building Consent Document - BC210441 - Pg 182 of 512 - 30/08/2021 - ComplyNZ

EARTHWOOL® GLASSWOOL INSULATION: CEILING

These instructions should be read in conjunction with local standards AS 3999 or NZS 4246 and all applicable local, state and federal building regulations. Before you start installing, please make sure you are familiar with our Health and Safety Information contained in this document. Ensure that you use tools and equipment that are suitable for the intended application. This will include suitable safety equipment.

Do not start work until the site is safe!

Assess the ceiling condition and structure together with the method of installation you are to use based on the appropriate requirements established in the building code, site assessment and or plans provided. Installation must be completed to the requirements of relevant standard: AS 3999 or NZS 4246.

Tools required:

- Sharp knife for trimming insulation
- Ladder
- Suitable clothing (see our Health and Safety Information)
- Tape measure
- Non-conductive insulation stick for positioning insulation in hard to reach areas
- Kneeling board to span ceiling framing

STEP 1

- Determine the most suitable product for your project. Ceilings can be insulated using blanket, rolls or segments.
- Where you have existing insulation that is level with the ceiling joists, you can install additional insulation over the top. It is recommended that this is installed at right angles to the existing insulation.
- Insulation is available in varying widths and thicknesses to suit most framing spaces. Please check Knauf Insulation's product guide for the most suitable product for your application.
- To calculate the number of packs needed, determine the area (m^2) to be insulated by multiplying the length by the width or wall height. The number of m^2 of insulation material is clearly marked on each pack. Divide the total area to be insulated by the m^2 in a pack to determine the number of packs required (don't forget to round up to the nearest whole pack). Allowances should be made for areas that are unable to be insulated.

STEP 2

- Don't take the insulation out of the packaging until you're in a position and ready to install.
- Before installation, gently agitate the insulation by gently shaking or bouncing it on its side until it recovers to the thickness stated on the label.
- Do not block ceiling vents and take care around downlights and other sources of heat. Consult the manufacturer's instructions for appropriate clearances. Additional guidance is provided in AS 3999 and NZS 4246.

STEP 3

- Start installing the insulation at the far corners of the ceiling and work your way back towards the ceiling access.
- When installing insulation between ceiling joists, ensure you achieve a snug fit, avoiding any gaps.
- When installing insulation in truss roofs, ensure that insulation is firmly butted together to achieve a consistent layer of insulation without any gaps.
- Where required, use a sharp knife to cut the insulation to fit. It is important that when you cut the insulation that you avoid coming into contact with any electrical services.
- When installing insulation in a roof eave (i.e. where the roof joins the ceiling), make sure the insulation covers the top plate but is not in contact with the roof. It is important to maintain a 20mm gap between the roofing substrate and the insulation.

STEP 4

- Complete the final check of the insulation ensuring all areas have been insulated and that you have an even and consistent layer of insulation.
- Finish your project by removing all packaging from the ceiling and disposing of all rubbish and excess insulation responsibly.

STEP 5

- Once you have worked your way back to the ceiling access, make sure you insulate the ceiling access panel before exiting the roof space.

We recommend that once completed another person checks the work to ensure it has been installed according to required standards.

HEALTH AND SAFETY INFORMATION

KDC - Approved Building Consent Document - BC210441 - Pg 183 of 512 - 30/08/2021 - ComplyNZ

SAFETY WARNINGS AND HAZARDS

- You must turn the mains power "Off" before entering the work space, and, if in any doubt about how to turn the power "Off", you must consult a licensed electrician.
- Working in areas that contain live electrical wiring is extremely hazardous. Take extreme care to avoid touching any live overhead electrical lines, supply cables or any other live cables in the workspace.
- Defective electrical cables, exposed terminals and conductors of electrical equipment such as light fittings and fans can cause burns and electric shocks please exercise caution when working near such hazards – check with an electrician if you are unsure if the cabling is safe.
- Working in hot and poorly ventilated areas when installing insulation can be dangerous.
- Working at heights, when installing insulation can be dangerous.

BEFORE INSTALLATION

- You must turn the mains power "Off" and, if in any doubt about how to turn the power "Off", consult a licensed electrician.
- Do not enter the workspace for the purposes of the pre-work inspection or the installation until you are satisfied that the power has been isolated. Even after isolating the power via the switchboard there may still be an electrical mains cable in either the ceiling or underfloor space that is live.
- Complete a pre-work assessment before installation to identify safety hazards which may include but are not limited to the following:
    - o access to the roof area,
    - o working at heights,
    - o electrical safety hazards,
    - o adequate ventilation of the work area and
    - o nails and sharp objects on the ground

- Before commencing work you must have systems in place to reduce risks identified in the pre-work assessment such as but which are not limited to:
    - o systems to prevent falling when working at heights.
    - o ventilate the working area if possible.
    - o cover exposed skin. When working in an unventilated area, wear a disposable face mask.
    - o rinse hands in cold water before washing.
    - o wear goggles when working overhead.
    - o clean using vacuum equipment.

DURING INSTALLATION

- Work with another person and maintain contact throughout both the assessment and installation process.
- Only open bags as required.
- Wear appropriate clothing for the job such as long sleeved top, flat rubber sole shoes, gloves conforming to Australian Standard AS2161 and ventilated non-fogging dust resistant goggles conforming to AS/NZ 1336, and a P2 dust mask.
- Avoid eye contact with dust or fibres to minimise eye or skin contact and inhalation during handling.
- Avoid installing insulation in hot weather and at the hottest part of the day.
- Under no circumstances must fixing devices in ceiling spaces or under floors, or in proximity to electrical wiring, be of metal or other conductive material.

Proven Performance

- Preferred by professional installers concerned with quality, appearance and productivity.
- Excellent acoustical properties reduce sound transmission in the home when properly installed.

KNAUFINSULATION

HEALTH AND SAFETY INFORMATION

KDC - Approved Building Consent Document - BC210441 - Pg 184 of 512 - 30/08/2021 - ComplyNZ

ELECTRICAL SAFETY CONSIDERATIONS BEFORE ISOLATING POWER

- Locate and review the incoming power supply, main switchboard and meter box.
- Ensure you understand if there is a main isolator and how power can be safely isolated.
- Ensure you understand the direction of the "On" and "Off" position of the main switch (NOTE: the "Off" position is not always as it seems - check with an electrician if you are unsure).
- Before installation, switch "Off" the electricity supply at the main switchboard (check with an electrician if you are unsure if power can be turned "Off" at the switchboard).
- Be aware that even after isolating the power via the switchboard there may still be an electrical mains cable in either the ceiling or underfloor space that is live. Take extreme care to avoid touching any live overhead electrical lines, supply cables or any other live cables in the workspace.

PROCEDURE FOR ISOLATION - CERAMIC FUSES (IF IN DOUBT YOU MUST CONSULT A LICENSED ELECTRICIAN)

- Ceramic fuses are typically found in older style homes.
- Identify if any fuse is deactivated.
- Check if there are any fuses currently in the "Off" position, take note of them.
- Place a strip of electrical tape over main switch isolator after it is turned "Off".
- Apply additional strips of electrical tape over the deactivated fuse and any individual isolator in the "Off" position as a reminder to leaving it in the "Off" position once the re-activation procedure has been completed.
- If you find a fuse plug out of its socket, whilst the main isolator is in the "Off" position, place electrical tape over its respective switch and one over the fuse socket opening.
- DO NOT touch the internal metal fittings.
- Place a written note on the main isolator switch or meter box enclosure to advise the power is "Off" and WORK IN PROGRESS is occurring.
- Check to ensure the lights and appliances, within the home, previously left on are no longer operating to confirm the mains power is now isolated.
- The original person who placed the isolation tag is the only one who can re-activate the power. Advise occupants of this requirement.

PROCEDURE FOR ISOLATION CIRCUIT BOARD (IF IN DOUBT YOU MUST CONSULT A LICENSED ELECTRICIAN)

- Circuit boards are typically found in modern homes.
- Check if there are any switches currently in the "Off" position, take note of them.
- Place a strip of electrical tape over main switch isolator after it is turned "Off".
- Apply additional strips of electrical tape over any deactivated fuses or individual switches in the "Off" position after isolating the mains power as a reminder to leave it in the "Off" position once the re-activation procedure has been completed.
- Turn "Off" all individual switches on the circuit board.
- Place a written note on the switches or meter box enclosure to advise the power is "Off" and WORK IN PROGRESS is occurring.
- Check to ensure the lights and appliances within the home previously left on are no longer operating to confirm the mains power is now isolated.
- The originator that placed the isolation tag is the only one who can re-activate the power. Advise occupants of the requirement.

REACTIVATING THE POWER

- After the completion of the installation, switch the mains power to the "On" position (for ceramic fuse board), but for a circuit board, switch the main power "On" and then each individual power isolator on one at a time. The taped switches in the "Off" position should stay switched "Off".
- WARNING: If you cannot reconnect power please ensure you seek assistance from a qualified electrician.

SUITABLE CLOTHING

- When handling any insulation material, especially in enclosed poorly ventilated areas and/or overhead, the use of suitable eye protection conforming to AS1336 will greatly reduce contact with dust or fibres.
- Wear suitable loose fitting clothes, including long sleeved shirts, long pants, cap and gloves.
- A suitable dust mask is recommended when working in confined, poorly ventilated and dusty areas.
- Wash work clothes separately and rinse the washing machine after use.

challenge.
create.
care.

KNAUF INSULATION

INSTALLATION INSTRUCTIONS

EARTHWOOL® GLASSWOOL INSULATION: WALL

These instructions should be read in conjunction with local standards AS 3999 or NZS 4246 and all applicable local, state and federal building regulations. Before you start installing, please make sure you are familiar with our Health and Safety Information contained in this document. Ensure that you use tools and equipment that are suitable for the intended application. This will include suitable safety equipment.

Do not start work until the site is safe!

Assess the wall condition and structure together with the method of installation you are to use based on the appropriate requirements established in the building code, site assessment and or plans provided. Installation must be completed to the requirements of relevant standard: AS 3999 or NZS 4246.

Tools required:

- Sharp knife for trimming insulation
- Ladder
- Suitable clothing (see our Health and Safety Information)
- Tape measure

STEP 1

- Determine the most suitable product for your project. Walls can be insulated using rolls or segments.
- Insulation is available in varying widths and thicknesses to suit most framing spaces. Please check Knauf Insulation's product guide for the most suitable product for your application.
- To calculate the number of packs needed, determine the area (m^2) to be insulated by multiplying the length by the width or wall height. The number of m^2 of insulation material is clearly marked on each pack. Divide the total area to be insulated by the m^2 in a pack to determine the number of packs required (don't forget to round up to the nearest whole pack). Allowances should be made for areas that are unable to be insulated.

STEP 2

- Don't take the insulation out of the packaging until you're in position and ready to install.
- Before installation check that the product selected matches the specification.
- Ensure that the insulation has lofted to the nominal thickness, if required, gently agitate the insulation by gently shaking or bouncing it on its side until it recovers to thickness stated on the label.
- Where installing around wall lights or heat sources consult the appliance manufacturer's instructions for appropriate clearances. Additional guidance is provided in AS 3999 and NZS 4246.

STEP 3

- When installing insulation between framing members, ensure that you achieve a snug fit avoiding any gaps, tucks and folds.
- It is recommended that you select products that have the same thickness as the cavity. In circumstances where the cavity is deeper than the product selected, adequate support must be provided.
- Make sure insulation fits snugly against top and bottom wall plates. The front face of the batt should be flush with the inside face of the framing.
- For metal frame walls, install insulation according to the relevant building code. Friction fit one side of the batt into the metal C-channel and butt the other edge against the metal stud. Install insulation to cover the full height of the wall.
- Use off cuts to insulate small and hard to fit areas.

STEP 4

- Attention to detail is very important. Make sure all areas are insulated, behind electrical outlets, plumbing and services.
- Seal all penetrations in exterior walls with insulation or foam sealants.

STEP 5

- Complete a final check of the installation ensuring all areas have been insulated and that you have an even and consistent layer of insulation.
- Finish your project by removing all packaging and disposing of all rubbish and excess insulation responsibly.

We recommend that once completed another person checks the work to ensure it has been installed according to required standards.

KDC - Approved Building Consent Document - BC210441 - Pg 185 of 512 - 30/08/2021 - ComplyNZ

challenge.
create.
care.

KNAUFINSULATION

HEALTH AND SAFETY INFORMATION

KDC - Approved Building Consent Document - BC210441 - Pg 186 of 512 - 30/08/2021 - ComplyNZ

SAFETY WARNINGS AND HAZARDS

- You must turn the mains power "Off" before entering the work space, and, if in any doubt about how to turn the power "Off", you must consult a licensed electrician.
- Working in areas that contain live electrical wiring is extremely hazardous. Take extreme care to avoid touching any live overhead electrical lines, supply cables or any other live cables in the workspace.
- Defective electrical cables, exposed terminals and conductors of electrical equipment such as light fittings and fans can cause burns and electric shocks please exercise caution when working near such hazards – check with an electrician if you are unsure if the cabling is safe.
- Working in hot and poorly ventilated areas when installing insulation can be dangerous.
- Working at heights, when installing insulation can be dangerous.

BEFORE INSTALLATION

- You must turn the mains power "Off" and, if in any doubt about how to turn the power "Off", consult a licensed electrician.
- Do not enter the workspace for the purposes of the pre-work inspection or the installation until you are satisfied that the power has been isolated. Even after isolating the power via the switchboard there may still be an electrical mains cable in either the ceiling or underfloor space that is live.
- Complete a pre-work assessment before installation to identify safety hazards which may include but are not limited to the following:
    - o access to the roof area,
    - o working at heights,
    - o electrical safety hazards,
    - o adequate ventilation of the work area and
    - o nails and sharp objects on the ground

- Before commencing work you must have systems in place to reduce risks identified in the pre-work assessment such as but which are not limited to:
    - o systems to prevent falling when working at heights.
    - o ventilate the working area if possible.
    - o cover exposed skin. When working in an unventilated area, wear a disposable face mask.
    - o rinse hands in cold water before washing.
    - o wear goggles when working overhead.
    - o clean using vacuum equipment.

DURING INSTALLATION

- Work with another person and maintain contact throughout both the assessment and installation process.
- Only open bags as required.
- Wear appropriate clothing for the job such as long sleeved top, flat rubber sole shoes, gloves conforming to Australian Standard AS2161 and ventilated non-fogging dust resistant goggles conforming to AS/NZ 1336, and a P2 dust mask.
- Avoid eye contact with dust or fibres to minimise eye or skin contact and inhalation during handling.
- Avoid installing insulation in hot weather and at the hottest part of the day.
- Under no circumstances must fixing devices in ceiling spaces or under floors, or in proximity to electrical wiring, be of metal or other conductive material.

Proven Performance

- Preferred by professional installers concerned with quality, appearance and productivity.
- Excellent acoustical properties reduce sound transmission in the home when properly installed.

KNAUFINSULATION

HEALTH AND SAFETY INFORMATION

KDC - Approved Building Consent Document - BC210441 - Pg 187 of 512 - 30/08/2021 - ComplyNZ

ELECTRICAL SAFETY CONSIDERATIONS BEFORE ISOLATING POWER

- Locate and review the incoming power supply, main switchboard and meter box.
- Ensure you understand if there is a main isolator and how power can be safely isolated.
- Ensure you understand the direction of the "On" and "Off" position of the main switch (NOTE: the "Off" position is not always as it seems - check with an electrician if you are unsure).
- Before installation, switch "Off" the electricity supply at the main switchboard (check with an electrician if you are unsure if power can be turned "Off" at the switchboard).
- Be aware that even after isolating the power via the switchboard there may still be an electrical mains cable in either the ceiling or underfloor space that is live. Take extreme care to avoid touching any live overhead electrical lines, supply cables or any other live cables in the workspace.

PROCEDURE FOR ISOLATION - CERAMIC FUSES (IF IN DOUBT YOU MUST CONSULT A LICENSED ELECTRICIAN)

- Ceramic fuses are typically found in older style homes.
- Identify if any fuse is deactivated.
- Check if there are any fuses currently in the "Off" position, take note of them.
- Place a strip of electrical tape over main switch isolator after it is turned "Off".
- Apply additional strips of electrical tape over the deactivated fuse and any individual isolator in the "Off" position as a reminder to leaving it in the "Off" position once the re-activation procedure has been completed.
- If you find a fuse plug out of its socket, whilst the main isolator is in the "Off" position, place electrical tape over its respective switch and one over the fuse socket opening.
- DO NOT touch the internal metal fittings.
- Place a written note on the main isolator switch or meter box enclosure to advise the power is "Off" and WORK IN PROGRESS is occurring.
- Check to ensure the lights and appliances, within the home, previously left on are no longer operating to confirm the mains power is now isolated.
- The original person who placed the isolation tag is the only one who can re-activate the power. Advise occupants of this requirement.

PROCEDURE FOR ISOLATION CIRCUIT BOARD (IF IN DOUBT YOU MUST CONSULT A LICENSED ELECTRICIAN)

- Circuit boards are typically found in modern homes.
- Check if there are any switches currently in the "Off" position, take note of them.
- Place a strip of electrical tape over main switch isolator after it is turned "Off".
- Apply additional strips of electrical tape over any deactivated fuses or individual switches in the "Off" position after isolating the mains power as a reminder to leave it in the "Off" position once the re-activation procedure has been completed.
- Turn "Off" all individual switches on the circuit board.
- Place a written note on the switches or meter box enclosure to advise the power is "Off" and WORK IN PROGRESS is occurring.
- Check to ensure the lights and appliances within the home previously left on are no longer operating to confirm the mains power is now isolated.
- The originator that placed the isolation tag is the only one who can re-activate the power. Advise occupants of the requirement.

REACTIVATING THE POWER

- After the completion of the installation, switch the mains power to the "On" position (for ceramic fuse board), but for a circuit board, switch the main power "On" and then each individual power isolator on one at a time. The taped switches in the "Off" position should stay switched "Off".
- WARNING: If you cannot reconnect power please ensure you seek assistance from a qualified electrician.

SUITABLE CLOTHING

- When handling any insulation material, especially in enclosed poorly ventilated areas and/or overhead, the use of suitable eye protection conforming to AS1336 will greatly reduce contact with dust or fibres.
- Wear suitable loose fitting clothes, including long sleeved shirts, long pants, cap and gloves.
- A suitable dust mask is recommended when working in confined, poorly ventilated and dusty areas.
- Wash work clothes separately and rinse the washing machine after use.

challenge.
create.
care.

5113G GIB Plasterboard Linings

Winstone Wallboards Ltd
+64 09 6330100
info@gib.co.nz
www.gib.co.nz

SUPPORTING DOCUMENTS

BRANZ Appraisal 928 (2016) GIB Ezybrace® Systems 2016

Ref 10727. Uploaded 17 Aug 2020

Purpose: Performance

GIB EzyBrace® Systems

Ref 11539. Uploaded 1 Sep 2020

Purpose: Installation, Maintenance

GIB Standard Plasterboard 101955

Ref 10140. Uploaded 26 Jun 2020

Purpose: Installation

GIB® Goldline™

Ref 11554. Uploaded 1 Sep 2020

Purpose: Installation, Maintenance

GIB® Product and System Warranty

Ref 11092. Uploaded 27 Aug 2020

Purpose: Warranty

GIB® Rondo® Metal Batten Systems

Ref 11551. Uploaded 1 Sep 2020

Purpose: Installation, Maintenance

GIB® Site Guide

Ref 11079. Uploaded 27 Aug 2020

Purpose: Installation, Maintenance

KDC - Approved Building Consent Document - BC210441 - Pg 188 of 512 - 30/08/2021 - ComplyNZ

KDC - Approved Building Consent Document - BC210441 - Pg 189 of 512 - 30/08/2021 - ComplyNZ

BRANZ Appraised
Appraisal No. 928 [2016]

GIB EZYBRACE® SYSTEMS 2016

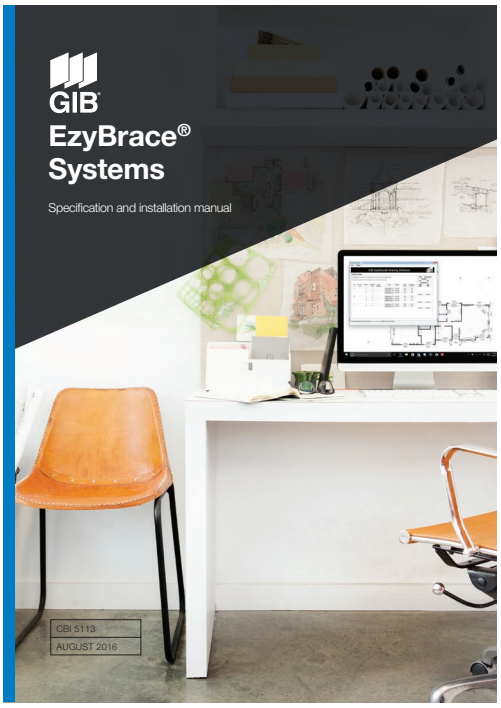

Appraisal No. 928 (2016)

BRANZ Appraisals
Technical Assessments of products for building and construction.

Winstone Wallboards Ltd
PO Box 12 256
Penrose
Auckland 1642
Tel: 09 633 0100
Fax: 09 633 0101
Helpline Tel: 0800 100 442
Helpline Fax: 0800 229 222
Web: www.gib.co.nz
Email: info@gib.co.nz

BRANZ
1222 Moonshine Rd,
RD 1, Porirua 5381
Private Bag 50 908
Porirua 5240,
New Zealand
Tel: 04 237 1170
branz.co.nz

Product

1.1 GIB EzyBrace® Systems 2016 are a range of wall and ceiling bracing systems based on the use of GIB® Standard, GIB Braceline® and other GIB® plasterboards. GIB EzyBrace® Systems 2016 are used to resist earthquake and wind loads on timber frame buildings designed and constructed in accordance with NZS 3604 and the GIBFix® Framing System. The GIB EzyBrace® Bracing Software provides an electronic means of calculating bracing demand and resistance.

Scope

2.1 GIB EzyBrace® Systems 2016 and the GIB EzyBrace® Bracing Software have been appraised for the design and use of interior wall and ceiling bracing systems in buildings within the scope limitations of NZS 3604.

Building Regulations

New Zealand Building Code (NZBC)

3.1 **In the opinion of BRANZ, the GIB EzyBrace® Systems 2016, if designed, used, installed and maintained in accordance with the statements and conditions of this Appraisal, will meet the following provisions of the NZBC:**

Clause B1 STRUCTURE: Performance B1.3.1, B1.3.2 and B1.3.4. GIB EzyBrace® Systems 2016 meet the requirements for loads arising from self-weight, earthquake, wind and impact [i.e. B1.3.3 (a), (f), (h) and (j)]. See Paragraphs 8.1 - 8.10.

Clause B2 DURABILITY: Performance B2.3.1 (a) not less than 50 years. GIB EzyBrace® Systems 2016 meet this requirement. See Paragraphs 9.1 - 9.4.

Clause F2 HAZARDOUS BUILDING MATERIALS: Performance F2.3.1. GIB EzyBrace® Systems 2016 meet this requirement and will not present a health hazard to people.

3.2 The bracing demand calculation and bracing distribution rules contained in the GIB EzyBrace® Bracing Software are in accordance with Section 5 of NZS 3604. Bracing resistance is provided by bracing element ratings determined in accordance with NZS 3604, Paragraph 8.3.1.2.

3.3 NZS 3604 is an **Acceptable Solution** for compliance with New Zealand Building Code Clause B1 Structure.

Readers are advised to check the validity of this Appraisal by referring to the Valid Appraisals listing on the BRANZ website, or by contacting BRANZ.

KDC - Approved Building Consent Document - BC210441 - Pg 190 of 512 - 30/08/2021 - ComplyNZ

Technical Specification

4.1 The GIB® plasterboards and accessories used with the GIB EzyBrace® Systems 2016, and supplied or specified by Winstone Wallboards Ltd are as follows:

GIB® plasterboards

- **GIB® Standard** - GIB® Standard plasterboard is a paper-bound fibreglass reinforced gypsum-plaster core sheet lining material. GIB® Standard plasterboard is available in 10 mm and 13 mm thicknesses and a sheet width of 1200 mm and 1350 mm (GIB® Wideline). The sheets have a taper on the two long sheet edges. The 10 mm thick sheets are also available with a square edge. Sheets are available in various lengths from 2400 mm to 6000 mm. The nominal sheet weight is 6.5 kg/m² for 10 mm thick sheets and 8.5 kg/m² for 13 mm thick sheets. GIB® Standard plasterboard face paper is a light buff colour.
- **GIB Braceline®** - GIB Braceline® is a high-density fibreglass reinforced paper-bound gypsum-plaster core sheet lining material. GIB Braceline® is available in 10 mm and 13 mm thicknesses. The sheets have a taper on the two long sheet edges. GIB Braceline® has a sheet width of 1200 mm and 1350 mm, and is available in lengths of 2400 mm, 2700 mm, 3000 mm, 3600 mm and 4800 mm. The nominal sheet weight is 9 kg/m² for 10 mm thick sheets and 12.5 kg/m² for 13 mm thick sheets. GIB Braceline® face paper is a light blue in colour.
- **Alternative GIB® plasterboards** - In certain situations, as specified in the Technical Literature, substitution is permitted with GIB Aqualine®, GIB Fyreline®, GIB Toughline® and GIB Ultraline®.

Components and Accessories

- **GIB® Accessories and GIB® Jointing Compounds** - As specified in the GIB® Site Guide Technical Literature.
- **Fasteners**
  - **GIB Grabber® High Thread Screws for fixing directly to timber** – 32 mm x 6g.
  - **GIB Nail** – 30 x 2.8 mm.
  - **GIB Grabber® screws for fixing to light gauge steel battens** – 32 mm x 6g.
- **Adhesive and Sealants**
  - **GIBFix® One** – an off-white acrylic adhesive supplied in 375 ml cartridges and 600 ml sausages.
  - **GIBFix® All-Bond** – a green solvent-based adhesive supplied in 375 ml cartridges and 600 ml sausages.
- **GIBFix® Framing Components**
  - **GIBFix® Angle** – 45 x 45 x 0.55 mm galvanised steel angle with a knurled surface. Supplied in lengths of 2.4 and 2.7 m.
  - **GIB Grabber® Dual Thread Screws for fixing to timber through GIBFix® Angle** – 32 mm x 7g needle-point screw with coarse thread lower section and fine thread upper section.
- **Fasteners, Anchors and Connections**
  - **GIB® HandiBrac®** – a one-piece, 2 mm thick, galvanised-steel angle bracket approximately 95 mm high, 65 mm long and 54 mm wide. The bracket is supplied with 5 Type 17 screws 14 g x 35 mm.
  - **BOWMAC® screw bolt** – M10 x 140 mm screw anchor, with a blue painted hex-head.
  - **Coach screws** – 12 mm x 150 mm and 50 x 50 x 3 mm washer hot-dipped galvanised for fixing to timber floors.
  - **Cast-in bolts** – M12 x 150 mm minimum and 50 x 50 x 3 mm washers for fixing to concrete floors.
  - **Shot fired fasteners** – minimum 75 mm x 3.8 mm with 16 mm discs for fixing GS1-N, GS2-N and GS2-NOM internal line bracing elements to concrete slabs.
  - **Galvanised or stainless steel strap** – 25 x 0.9 mm top and bottom plate connections.
  - **Strap fixings** – 30 x 2.5 mm hot-dipped galvanised or stainless-steel flat-head nails.

  Note: For corrosion protection requirements refer to NZS 3604: 2011 Section 4.

Readers are advised to check the validity of this Appraisal by referring to the Valid Appraisals listing on the BRANZ website, or by contacting BRANZ.

KDC - Approved Building Consent Document - BC210441 - Pg 191 of 512 - 30/08/2021 - ComplyNZ

- **Ceiling Diaphragms** - Ceiling diaphragms are constructed using timber ceiling battens, or GIB® Rondo® or similar metal ceiling batten systems.
- **Plywood**
  - **Plywood** – minimum of 7 mm thick complying with AS/NZS 2269 D-D Structural Grade.
  - **Plywood fixings** – 50 x 2.5 mm hot-dipped galvanised or stainless-steel annular-grooved, flat-head nails.

Handling and Storage

5.1 The best results are achieved when GIB® plasterboards are treated as a finishing material and protected from damage. Sheets must be stacked flat and kept dry at all times. For limits on stack heights see the GIB® Site Guide. Sheets must be carried on edge and not dragged.

5.2 All accessories must be kept dry.

Technical Literature

6.1 Refer to the Appraisals listing on the BRANZ website for details of the current Technical Literature for GIB EzyBrace® Systems 2016. The Technical Literature must be read in conjunction with this Appraisal. All aspects of design, use, installation and maintenance contained in the Technical Literature and within the scope of this Appraisal must be followed.

Design Information

General

7.1 NZS 3604 provides methods to distribute the bracing elements in walls to resist forces. The use of ceiling diaphragms is defined in the Technical Literature.

7.2 GIB EzyBrace® Systems 2016 are for use in dry, internal situations only.

7.3 GIB EzyBrace® Systems 2016 must not be exposed to temperatures of 52°C or greater for prolonged periods. Refer to appliance and fitting manufacturers for installation details.

GIB EzyBrace® Bracing Software

7.4 The GIB EzyBrace® Bracing Software contains design procedures and an electronic calculation method for bracing demand calculated in accordance with NZS 3604: 2011, Section 5. Floor loadings can be selected in accordance with either NZS 3604, Bracing Demand Tables 5.5 – 5.10 for 2 kPa floor loads or less, or Tables 14.1 – 14.3 for 3 kPa floor loads.

7.5 The bracing demand calculations contained in the GIB EzyBrace® Bracing Software are based on first principles engineering and calculate wind and earthquake demand based on the building parameters entered. Resulting bracing demand calculations are project specific and can differ from values derived using NZS 3604 wind and earthquake demand tables. The GIB EzyBrace® Bracing Software has been assessed as part of this Appraisal.

7.6 The bracing ratings for GIB EzyBrace® Systems 2016 are embedded in the GIB EzyBrace® Bracing Software.

GIBFix® Framing System

7.7 The GIBFix® Framing System utilises GIBFix® Angles fixed at internal corners and at wall/ceiling junctions to reduce the potential for fastener 'popping' and joint cracking due to timber framing movement. The GIBFix® Framing System also offers an alternative arrangement of studs at corners and at intersecting walls to improve insulation and to reduce thermal bridging compared to traditional wall framing layouts. Refer to the Technical Literature for full details.

7.8 Where walls intersect, noggings are required at maximum 900 mm centres to enable fixing of the end stud of the intersecting wall to the main wall framing.

7.9 The GIBFix® Framing System permits the use of a single panel hold-down [e.g. GIB® HandiBrac®] at wall corners and T-intersections for both the across and along bracing directions.

Readers are advised to check the validity of this Appraisal by referring to the Valid Appraisals listing on the BRANZ website, or by contacting BRANZ.

KDC - Approved Building Consent Document - BC210441 - Pg 192 of 512 - 30/08/2021 - ComplyNZ

Framing

7.10 GIB EzyBrace® Systems 2016 can be installed using conventional timber framing layouts or by using the layouts provided in the GIBFix® Framing System. The bracing ratings embedded in the GIB EzyBrace® Bracing Software are equally applicable to both framing options.

7.11 Timber framing grade, spacing and construction must comply with NZS 3604. Timber treatment must comply with NZBC Acceptable Solution B2/AS1.

7.12 Winstone Wallboards Ltd recommends the use of kiln-dried stress-graded framing timber. The minimum actual framing dimensions are 90 x 45 mm for external walls and 75 x 45 mm for internal walls.

7.13 Joints in the top plates of bracing panels must be tied together with 3 kN and 6 kN top plate connectors using 25 x 0.9 mm hot-dip galvanised mild steel strap, 3 nails each side of joint for 3 kN and 6 nails each side of joint for 6 kN.

Bracing System GS2-NOM

7.14 Most GIB EzyBrace® Systems require additional fasteners at the corners to achieve the published bracing ratings. The GS2-NOM system only requires fixings at 300 mm centres around the sheet perimeter.

7.15 Where internal doors penetrate a GS2-NOM bracing element and recessed door jambs are used, the sheets may be adhesive fixed around the door opening with GIBFix® All-Bond, instead of screw fixing. This is designed to reduce fastener 'popping' around internal doors when using grooved door frames. Screw fixing should be used where door frames are to be finished with architraves and the architrave will cover the screws. The adhesive fix option around door openings must not be used with any other GIB EzyBrace® Systems 2016.

Alternative GIB® plasterboards

7.16 On occasions, properties additional to bracing may be required of the plasterboard lining. Refer to Table 1.

BOWMAC Screw Bolts

7.17 When BOWMAC Screw Bolts are used as fixings for external walls with concrete masonry header block foundations, the minimum grout/concrete strength must be as specified in NZS 3604. BOWMAC Screw Bolts may be used in Corrosion Zones B and C as defined in NZS 3604. BOWMAC Screw Bolts may only be used in NZS 3604 Corrosion Zone D where the minimum concrete cover to the bolt is 60 mm. This cannot be achieved with standard 90 mm wide timber framing. An alternative option in this scenario is to use 140 mm wide framing.

Table 1: Permitted Alternatives in GIB EzyBrace® Systems

PERMITTED GIB® plasterboard ALTERNATIVES IN GIB EZYBRACE® SYSTEMS 2016									
GIB Ezybrace® Systems 2016 have been designed and tested using only the products specified. Occasionally additional properties may be required to be provided by a different GIB® plasterboard product. The following table provides acceptable alternative options.									
Specified	Permitted alternative GIB® plasterboard products								
GIB® plasterboard	GIB® Standard	GIB Ultraline®	GIB Braceline/ Noiseline®	GIB Aqualine®	GIB Toughline®	GIB Fyreline®			
						10mm	13mm	16mm	19mm
GIB® Standard	N/A	✓	✓	✓	✓	✓ NOTE 1	✓NOTE 1 and 3		
GIB Braceline®	X	X	N/A	✓ NOTE 2	✓	X	✓NOTES 1, 2 and 3		

- **NOTE 1:** *The fastener type and length and must be as required for the relevant FRR, system but the fixing pattern must be as required for bracing elements.*
- **NOTE 2:** *The bracing element must be 900 mm or longer. Fasteners must be at maximum 100 mm centres to the perimeter of the bracing element. The bracing corner fastening pattern applies to all four corners of the element.*
- **NOTE 3:** *Specify traditional wall framing layout where a Fire Resistance Rating (FRR) is required. See Paragraph 11.4.*

Readers are advised to check the validity of this Appraisal by referring to the Valid Appraisals listing on the BRANZ website, or by contacting BRANZ.

KDC - Approved Building Consent Document - BC210441 - Pg 193 of 512 - 30/08/2021 - ComplyNZ

Structure

Bracing

8.1 The bracing unit (BU) ratings embedded in the GIB EzyBrace® Bracing Software and vary with the wall length.

8.2 The Technical Literature provides comprehensive construction and panel hold-down details. These include bottom plate fixings using anchor screws and cast-in bolts (concrete), coach screws (timber), GIB® HandiBrac® or nailed stud-to-plate straps.

8.3 The bracing units are derived from BRANZ P21 test method based on a wall height of 2.4 m. For greater wall heights the bracing rating is calculated by multiplying the appropriate bracing rating shown in Table 1 by a factor f=2.4 and divided by the wall height in metres. Walls lower than 2.4 m shall be rated as if they were 2.4 m high.

8.4 NZS 3604 limits wall bracing elements to a maximum of 120 BU/m for timber-framed floors and 150 BU/m for concrete floors.

Ceiling Diaphragms

8.5 GIB® ceiling diaphragms are used to space bracing lines further apart than 6 m. The basic shape of a ceiling diaphragm must be square or rectangular and the length must not exceed twice the width.

8.6 For ceiling diaphragms not steeper than 15° and not exceeding 7.5 m in length, any GIB® plasterboard may be used provided the perimeter fixing are at 150 mm centres.

8.7 For ceiling diaphragms not steeper than 45° and not exceeding 7.5 m in length, and for diaphragms not steeper than 25° and not exceeding 12 m in length, any GIB® plasterboard may be used provided the perimeter fixings are at 100 mm centres.

Openings in Bracing Elements

8.8 Small openings of 90 x 90 mm or less may be placed anywhere except within 90 mm of the edge of the bracing element.

Shower Areas

8.9 GIB EzyBrace® Systems 2016 must not be located in shower cubicles or behind baths and the like. GIB EzyBrace® Systems 2016 may be used in water-splash areas provided they are protected as required by NZBC Clause E3 Internal Moisture. Refer GIB Aqualine® Wet Area Systems.

Impact Resistance

8.10 GIB® plasterboards provide adequate resistance to soft body impact, based upon history of use in domestic and light commercial applications.

Durability

9.1 GIB EzyBrace® Systems 2016, including linings and their fixings have a serviceable life of at least 50 years. The ability of the systems to remain durable is dependent on them remaining dry in service, and being maintained in accordance with this Appraisal.

Maintenance

9.2 The building must be maintained weatherproof and GIB® plasterboards must be protected from external and internal moisture in accordance with NZBC Clauses E2 and E3.

9.3 Holes resulting from damage to the lining, up to 100 x 100 mm square, will have no significant effect on the performance of the bracing panel. Such holes may be repaired by patching, stopping and finishing as appropriate. Independent expert advice must be sought to assess the effect and repair of larger areas of damage.

9.4 Bracing elements require no ongoing maintenance, apart from decoration and the repair of any damage.

Readers are advised to check the validity of this Appraisal by referring to the Valid Appraisals listing on the BRANZ website, or by contacting BRANZ.

KDC - Approved Building Consent Document - BC210441 - Pg 194 of 512 - 30/08/2021 - ComplyNZ

Prevention of Fire Occurring

10.1 Separation or protection must be provided to GIB® plasterboard from heat sources such as fire places, heating appliances, flues and chimneys. Part 7 of NZBC Acceptable Solutions C/AS1 – C/AS6 and NZBC Verification Method C/VM1 provide methods for separation and protection of combustible materials from heat sources.

Fire Affecting Areas Beyond the Fire Source

11.1 For Internal Surface Finish properties and Fire Resistance Ratings, refer to BRANZ Appraisal No. 289 [2012] GIB® Fire Rated Systems.

Internal Moisture

12.1 GIB® plasterboard must be used in dry internal situations, and must not be used where likely to be exposed to liquid water, or where extended exposure to humidity above 90% RH is expected, e.g., such as may be expected in sauna rooms, commercial kitchens and the like.

Installation Information

Installation Skill Level Requirement

13.1 Installation of GIB EzyBrace® Systems 2016 must be completed by, or under the supervision of a Licensed Building Practitioner with the relevant Licence Class, in accordance with the Technical Literature and this Appraisal.

General

14.1 GIB EzyBrace® Systems 2016 must be installed in accordance with the Technical Literature. For inspection, reference must be made to the Technical Literature.

Framing

14.2 To achieve an acceptable decorative finish, the GIB® Site Guide specifies that walls must not be lined unless the moisture content of timber framing is less than 18%. Winstone Wallboards Ltd recommends a moisture content of 12% or less where buildings are to be air conditioned, centrally heated or have heat pumps installed.

14.3 Where the GIBFix® Framing System is used, GIBFix® Angles are tacked to the framing with flat-head clouts prior to installation of the GIB® plasterboard.

Cutting

14.4 GIB® plasterboard is easily cut by scoring the face paper with a sharp short-bladed trimming knife, and then snapping the plasterboard away from the cut face and cutting the back paper or by sawing. Use of a metal straightedge facilitates clean straight cuts. Cut edges can be tidied up by using a knife. Paper dags should be removed.

Hold-downs

14.5 GIB EzyBrace® Systems 2016 which require hold-downs must either have a GIB® Handibrac® fitted to each end of the bracing element or alternatively a metal stud-to-plate strap and hold-down anchor may be used. Refer to the Technical Literature for full installation details. Where a metal stud-to-plate strap is used, the hold-down anchor must be placed no more than 80 mm from the end of the bracing element.

14.6 Where the GIBFix® Framing System is used, a single hold-down located at a wall intersection may be used to provide the hold-down in both the across and along bracing directions.

Readers are advised to check the validity of this Appraisal by referring to the Valid Appraisals listing on the BRANZ website, or by contacting BRANZ.

KDC - Approved Building Consent Document - BC210441 - Pg 195 of 512 - 30/08/2021 - ComplyNZ

Plasterboard Sheet Fixing

14.7 Corner fixings must be 50 mm away from the sheet corner. Fixings must be no closer than 12 mm from the paper-bound sheet edge, and no closer than 18 mm from a cut edge, and driven at right angles to the sheet until the head is seated in a slight dimple just below the surface of the paper liner. Fixings must not be over-driven.

14.8 Wall bracing plasterboards (except for those used with the GS2-NOM system) are fixed at 150 mm centres around the perimeter framing of the bracing element *(Note variation for GIB Aqualine® and GIB Fyreline® - see Table 1)*. At the corners of the wall bracing elements, a special fastening pattern is required with fasteners spaced at 50 mm, 100 mm, 150 mm, 225 mm and 300 mm from the corner and there-after at 150 mm centres. Fixing to other framing is either mechanical or by using GIBFix® adhesives.

14.9 When installing GS2-NOM bracing elements, the GIB® plasterboard is fixed to framing around the bracing element perimeter and at sheet joints with fasteners at maximum 300 mm centres. Where recessed door jambs are used on internal door frames, the GIB® plasterboard may be fixed to the framing around the door opening with GIBFix® All-Bond. See Paragraph 7.15.

14.10 Where GIB Aqualine® or GIB Fyreline® substitutes for GIB Braceline®, bracing elements must be longer than 900 mm and the bracing element perimeter fasteners must be spaced at 100 mm centres and the corner pattern described in Paragraph 14.8 used.

14.11 Full sheets must be used wherever possible.

Fire Resistance Rated Bracing Elements

14.12 Where a bracing element is also used as a fire-rated element, the method of fixing (including the length of the fixing specified) for the fire-rated element must be used, but the perimeter fixings of the bracing element must be at 150 mm centres and fixings at corners of the bracing element must be fixed as described in Paragraph 14.8. In two-layer systems the inner layer must be used for bracing.

Plywood Fixing

14.13 Plywood is nail fixed at 150 mm centres around the perimeter of each sheet and at 300 mm centres to intermediate framing.

Ceiling Diaphragms

14.14 All GIB EzyBrace® System 2016 ceiling diaphragms require fixings around the perimeter at 100 or 150 mm centres, depending on the ceiling pitch and length. See Paragraphs 8.4 to 8.6 and refer to the Technical Literature.

14.15 The perimeter of the ceiling diaphragm is fixed to GIBFix® Angles, GIB® Rondo® perimeter channels, or alternatively, to an additional ex 150 x 40 mm timber plate fixed to the top plate.

Jointing and Finishing

14.16 All bracing element joints must be reinforced with GIB® tape and finished in accordance with the GIB® Site Guide.

Health and Safety

15.1 Dust resulting from the sanding of stopping and finishing compounds may be a respiratory irritant, and the use of a suitable facemask is recommended.

Readers are advised to check the validity of this Appraisal by referring to the Valid Appraisals listing on the BRANZ website, or by contacting BRANZ.

KDC - Approved Building Consent Document - BC210441 - Pg 196 of 512 - 30/08/2021 - ComplyNZ

Basis of Appraisal

The following is a summary of the technical investigations carried out:

Tests

16.1 Bracing tests were carried out by Winstone Wallboards Ltd in accordance with BRANZ Technical Paper P21 to determine the performance of GIB EzyBrace® Systems 2016 when the building is subjected to lateral wind or earthquake loading. Nail and screw slip tests were carried out by BRANZ and Winstone Wallboards Ltd. The Winstone Wallboard's test facilities, procedures and results have been reviewed by BRANZ and found to be satisfactory.

Other Investigations

17.1 The GIB EzyBrace® Bracing Software has been assessed by BRANZ and found to be satisfactory.

17.2 The GIB EzyBrace® Systems 2016 and GIB® Site Guide Technical Literature have been examined by BRANZ and found to be satisfactory.

17.3 Site visits were carried out by BRANZ to assess the practicability of the installation of the systems, and to view completed installations.

17.4 An assessment was made of the durability of the systems by BRANZ technical experts and found to be satisfactory.

17.5 The properties of Winstone Wallboards Ltd GIB® plasterboards have been assessed for the following properties: MOR, MOE, paper tensile strength, paper shear strength, nail pull resistance, Hunter hardness, inspection for fungal spores, hard and soft body impact tests.

Quality

18.1 Winstone Wallboards Ltd's manufacturing process and details of the quality and composition of the materials, have been examined by BRANZ and found to be satisfactory.

18.2 The quality management systems of Winstone Wallboards Ltd have been assessed and registered by TELARC as meeting the requirements of ISO 9001, Registration No. 581.

18.3 Winstone Wallboards Ltd is responsible for the quality of the product supplied.

18.4 The quality of the application and finish on site is the responsibility of the installation and stopping contractors.

18.5 Designers are responsible for the design of buildings.

18.6 Building owners are responsible for the maintenance in accordance with the instructions of Winstone Wallboards Ltd.

Sources of Information

- AS/NZS 2269.0:2012 Plywood - Structural - Specifications
- AS/NZS 2588: 1998 Gypsum plasterboard.
- BRANZ Technical Paper P21: 2010 A wall bracing test and evaluation procedure.
- NZS 3604: 2011 Timber-framed buildings.
- Ministry of Business, Innovation and Employment Record of Amendments for Compliance Documents and Handbooks.
- The Building Regulations 1992.

Readers are advised to check the validity of this Appraisal by referring to the Valid Appraisals listing on the BRANZ website, or by contacting BRANZ.

KDC - Approved Building Consent Document - BC210441 - Pg 197 of 512 - 30/08/2021 - ComplyNZ

In the opinion of BRANZ, GIB Ezybrace® Systems 2016 is fit for purpose and will comply with the Building Code to the extent specified in this Appraisal provided it is used, designed, installed and maintained as set out in this Appraisal.

The Appraisal is issued only to Winstone Wallboards Ltd, and is valid until further notice, subject to the Conditions of Appraisal.

Conditions of Appraisal

1. This Appraisal:
   a) relates only to the product as described herein;
   b) must be read, considered and used in full together with the Technical Literature;
   c) does not address any Legislation, Regulations, Codes or Standards, not specifically named herein;
   d) is copyright of BRANZ.
2. Winstone Wallboards Ltd:
   a) continues to have the product reviewed by BRANZ;
   b) shall notify BRANZ of any changes in product specification or quality assurance measures prior to the product being marketed;
   c) abides by the BRANZ Appraisals Services Terms and Conditions.
   d) Warrants that the product and the manufacturing process for the product are maintained at or above the standards, levels and quality assessed and found satisfactory by BRANZ pursuant to BRANZ's Appraisal of the product.
3. BRANZ makes no representation or warranty as to:
   a) the nature of individual examples of, batches of, or individual installations of the product, including methods and workmanship;
   b) the presence or absence of any patent or similar rights subsisting in the product or any other product;
   c) any guarantee or warranty offered by Winstone Wallboards Ltd.
4. Any reference in this Appraisal to any other publication shall be read as a reference to the version of the publication specified in this Appraisal.
5. BRANZ provides no certification, guarantee, indemnity or warranty, to Winstone Wallboards Ltd or any third party.

For BRANZ

Chelydra Percy
Chief Executive

Date of Issue:
05 September 2016

Readers are advised to check the validity of this Appraisal by referring to the Valid Appraisals listing on the BRANZ website, or by contacting BRANZ.

GIB® EzyBrace® Systems

Specification and installation manual



KDC - Approved Building Consent Document - BC210441 - Pg 198 of 512 - 30/08/2021 - ComplyNZ

CBI 5113
AUGUST 2016

KDC - Approved Building Consent Document - BC210441 - Pg 199 of 512 - 30/08/2021 - ComplyNZ



NATIONAL SUPPORT

VISIT: Winstone Wallboards Limited
37 Felix Street, Penrose,
Auckland 1061, New Zealand
POST: PO Box 12 256, Penrose 1642,
Auckland, New Zealand
PHONE: +64 9 633 0100
FAX: +64 9 633 0101
Free Fax: 0800 229 222
EMAIL: info@gib.co.nz
WEB: gib.co.nz

GIB® HELPLINE

0800 100 442

KDC - Approved Building Consent Document - BC210441 - Pg 200 of 512 - 30/08/2021 - ComplyNZ

Based on learnings derived from the 2011 Canterbury earthquakes GIB EzyBrace® Systems have been updated to offer improved design flexibility and further simplification of the bracing design and build process.

NEW GIB EZYBRACE® 2016 DESIGN SOFTWARE

- Improved user interface with simplified bracing design process.
- Increased functionality including exterior line check function, easy insert/deletion of bracing elements and built in software help function.
- Includes the new GIB® Bracing element GS2- NOM
- Allows the GIBFix® Framing System to be used in GIB EzyBrace® designs.

NEW GIB® BRACING ELEMENT GS2-NOM

- Allows internal walls lined with GIB® plasterboard on both sides and fastened off as per the standard fixing requirements of the current GIB® Site Guide to contribute to bracing resistance.
- Potentially reduces the amount of fasteners[1]
- Encourages more even bracing distribution throughout the building.

[1] Actual savings dependent on building and bracing design

UPDATE TO OPENINGS IN BRACING ELEMENTS AND CEILING DIAPHRAGMS

- Large hole specification updated to use a more conservative methodology.
- Guidance included for fireplace flues and range hoods.

NEW — GIBFIX® FRAMING SYSTEM

- Reduced potential for fastener pop and joint cracking as a result of timber frame movement.
- Reduced potential for on-site call backs.
- Improved thermal performance.
- Reinforced plasterboard junctions.

BRANZ Appraised
Appraisal No.928 [2016]

KDC - Approved Building Consent Document - BC210441 - Pg 201 of 512 - 30/03/2021 - ComplyNZ

CONTENTS

System Summary **5**
GIB EzyBrace® Systems — August 2016 5
GIB® Plasterboard Substitution Table 5

Introduction **6**
Scope of Use 6
Finish Quality — Framing and Substrates 6
New GIBFix® Framing Systems 6
New GS2-NOM Bracing Element 6
Compliance with the NZ Building Code 7
CAD Design Detail 7
Appraisal 7

Bracing Resistance and Demand **8**
Bracing Resistance 8
Bracing Demand 9
Software Functionality 10

Design and Construction **12**
GIB® Plasterboard Linings 12
GIB EzyBrace® Systems in Water-Splash Areas 12
Renovation 12
Openings in Bracing Elements 12
Timber Framing 13
GIBFix® Framing System (Alternative Layout) 13
Guidelines for Intersection Walls 13
Top Plate Connections 14
Parapets and Gable End Walls 14
Bottom Plate Fixing 14
Bracing Strap Installation 15
GIB HandiBrac® Installation 16
GIB HandiBrac® Placement with GIBFix® Framing System Layout 17
Ceiling Diaphragms 18
Ceiling Battens in Ceiling Diaphragms 19
Openings in Ceiling Diaphragms 20
Length of GIB EzyBrace® Elements ('N' Type) 21
Length of GIB EzyBrace® Elements ('H' Type) 22

System Specifications **23**
GIB EzyBrace® Systems Specification — GS1-N 23
GIB EzyBrace® Systems Specification — GS2-NOM 24
GS2-NOM Adhesive Fixing Option at Door Jambs 25
GIB EzyBrace® Systems Specification — GS2-N 26
GIB EzyBrace® Systems Specification — GSP-H 27
GIB EzyBrace® Systems Specification — BL1-H 28
GIB EzyBrace® Systems Specification — BLG-H 29
GIB EzyBrace® Systems Specification — BLP-H 30

Sustainability and the Environment **31**

KDC - Approved Building Consent Document - BC210441 - Pg 202 of 512 - 30/08/2021 - ComplyNZ

GIB EzyBrace® Systems — August 2016

Winstone Wallboards Ltd accepts no liability if GIB EzyBrace® Systems are not designed and installed in strict accordance with instructions contained in this publication.

USE ONLY THE CURRENT SPECIFICATION

This publication may be superseded by a new publication at any time. Winstone Wallboards accepts no liability for reliance upon publications that have been superseded. Check for the current publication at gib.co.nz/library before using this publication. If you are unsure whether this is the current publication, call the GIB® Helpline on 0800 100 442.

GIB EzyBrace® 2011 software and specification literature remains valid until futher notice.

PATENTS

GIBFix® Framing System and GIB EzyBrace® Systems, including componentry and design method, have patents pending (NZ Patent Number 596691, NZ Patent 709159 pending) and design and other IP rights reserved.

Beware of substitution

The performance of GIB® Systems are very sensitive to design detailing and construction practices. All GIB® Systems have been developed specifically for New Zealand conditions and independently tested or assessed to ensure the required level of performance. It is important to use only GIB® branded components where specified and to closely follow the specified design details and construction practices, to be confident that the required level of performance and quality is achieved on site.

For further information call our GIB® Helpline on 0800 100 442.

GIB EzyBrace® Systems have been designed and tested using only the products specified. When additional GIB® plasterboard properties are required the table below provides acceptable alternative options.

	Acceptable alternative GIB® plasterboards								
Specified GIB® plasterboard	GIB® Standard	GIB Ultraline®	GIB Braceline/ Noiseline®	GIB Aqualine®	GIB Toughline®	GIB Fyreline®			
						10mm	13mm	16mm	19mm
GIB® Standard		OK	OK	OK	OK	Note 1 and 3			
GIB Braceline®	X	X		Note 2	OK	X	Notes 1, 2 and 3		

Note 1 *The fastener type and length must be as required for the relevant FRR system using the perimeter fixing pattern illustrated for the relevant bracing specification.*

Note 2 *The element must be 900mm or longer. Decrease perimeter fastener centres to 100mm. The bracing corner fastening pattern, as illustrated for the relevant specification applies to all four corners of the element. Panel hold-down fixings are required.*

Note 3 *Specify traditional wall framing layout (see figure 1) where a Fire Resistance Rating (FRR) is required.*

KDC - Approved Building Consent Document - BC210441 - Pg 203 of 512 - 30/08/2021 - ComplyNZ

Scope of use

This document is a guide to wall bracing of light timber frame (LTF) buildings constructed in accordance with NZS3604:2011 Timber Framed Buildings and presents a simple and efficient method for calculating and incorporating bracing resistance. This information draws on recent experiences from seismic activity in New Zealand and seeks to minimise earthquake damage to plasterboard linings in LTF buildings.

This document outlines the main principles of bracing design and construction using GIB® plasterboard products and systems. Further detailed information can be found in the GIB® Bracing Supplement by visiting gib.co.nz/library. This 'live' on-line document is updated continuously in response to market feedback and Winstone Wallboards' development initiatives.

Finish quality — framing and substrates

Home owners are increasingly demanding a high quality of interior finish. Finish quality is heavily influenced by the substrate to which linings are fixed. Detailed information on 'Levels of Finish' is given in AS/NZS 2589 and the latest version of the GIB® Site Guide.

New GIBFix® Framing System

With increased NZ Building Code requirements and growing customer demand for thermal efficiency and high quality interior finishes, traditional framing practices present problems such as multiple framing members at wall intersections creating thermal 'bridges' and cavities where insulation cannot be installed effectively.

Figure 1 shows a traditional wall framing layout. Figure 2 shows the alternative GIBFix® Framing System layout.

Multiple timber framing members also take longer to dry resulting in an increased risk of fastener pops and blemishes resulting from timber frame movement.

The GIBFix® Framing System offers better thermal efficiencies and minimises potential joint imperfections resulting from interior linings being fixed to multiple timber framing members.

The GIBFix® Framing System can be used in conjunction with GIB EzyBrace® Systems.

Bracing ratings apply whether fixing is directly into timber or into the metal components, provided correct construction details, fastener types and centres are applied.

FIGURE 1: TRADITIONAL WALL FRAMING LAYOUT

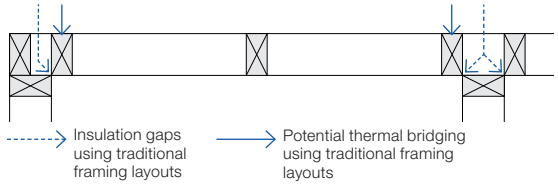

GFS004

FIGURE 2: GIBFIX® FRAMING SYSTEM (ALTERNATIVE LAYOUT)

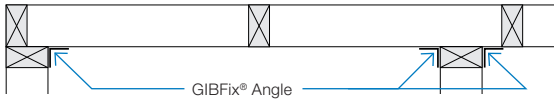

GFS005

NEW GS2-NOM Bracing Element

The new GS2-NOM bracing element allows most homes to be braced with a single lining type and less fixings so that a high quality finish is maintained throughout.

GS2-NOM permits the contribution of 'nominally fixed' internal walls. Higher performance elements are commonly specified on external walls and where limited wall area is available or adjacent to significant openings.

Winstone Wallboards recommends the use of the GIBFix® Framing System in conjunction with GS2-NOM elements. Key benefits of this approach include:

- Reduced potential for fastener pop and joint cracking of plasterboard linings.
- Enhanced thermal performance.
- Allows internal walls lined with GIB® plasterboard on both sides and fastened off as per the standard fixing requirements of the current GIB® Site Guide to contribute bracing resistance.
- Potentially reduces the amount of fasteners[1].
- Encourages more even bracing distribution throughout the building.

1. Actual savings dependent on building and bracing design.

KDC - Approved Building Consent Document - BC210441 - Pg 204 of 512 - 30/08/2021 - ComplyNZ

Compliance with the NZ Building Code

NZBC CLAUSE B1 — STRUCTURE

The design and material specification for steel and timber framing used in conjunction with this literature must be in accordance with the performance requirements of NZBC Clause B1. GIB EzyBrace® Systems comply with the requirements of NZS 3604:2011, when designed and installed in accordance with this publication and relevant technical literature. NZS 3604:2011 is an acceptable solution to NZBC Clause B1.

NZBC CLAUSE B2 — DURABILITY

Under normal conditions of dry internal use GIB EzyBrace® Systems have a service life in excess of 50 years and satisfy the requirements of NZBC Clause B2. When in conditions of dry internal use, the components specified in this literature satisfy the requirements of NZBC Clause B2.

GIB® EzyBrace® Systems must not be specified in areas where 15 year durability applies and where linings are subject to direct water pressure, e.g. shower cubicle or shower over bath situations.

NZBC CLAUSE F2 — HAZARDOUS BUILDING MATERIALS

Under normal conditions of use, during handling, installation or serviceable life, the products detailed in GIB EzyBrace® Systems do not constitute a health hazard and meet the provisions of the NZBC Clause F2.

NZBC CLAUSE H1 — ENERGY EFFICIENCY

Buildings must be constructed to achieve an adequate degree of energy efficiency and the building envelope must provide adequate thermal resistance. The required thermal resistance (R-value) of timber framed external walls depends on climate zone but is commonly in the range from R 1.9 to R 2.0.

CAD design details

Where applicable drawings related to GIB EzyBrace® Systems have been produced for CAD design. These are identified by a unique number in the bottom corner of each detail box. CAD design details can be found at gib.co.nz/library.

Appraisal

GIB EzyBrace® Systems 2016 have been appraised by the Building Research Association of New Zealand (BRANZ), Appraisal No. 928 (2016) GIB EzyBrace® Systems, 2016.

It is of prime importance to comply with the details of design, construction and workmanship in this document.

KDC - Approved Building Consent Document - BC210441 - Pg 205 of 512 - 30/08/2021 - ComplyNZ

Bracing resistance

WALL BRACING LAYOUT

When designing the bracing layout, carefully consider the final finished appearance and utilise full wall lengths where possible, avoiding unnecessary fastenings in the centre of a clear wall. Using the available wall length provides additional bracing and achieves improved aesthetics.

FIGURE 3: WALL BRACING LAYOUT

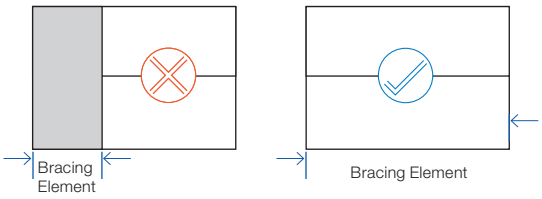

BRACING DISTRIBUTION

Distribute bracing by drawing a grid pattern of bracing lines along and across the building. Bracing lines must coincide as much as possible with the wall bracing elements. Pairs of elements may be counted on a single line provided they are no more than 2 metres apart and parallel. See figure 4.

Locate bracing evenly throughout the building and as close as practical to corners of external walls.

Space bracing lines no more than:

- 6 metres for standard construction with any GIB® plasterboard ceiling, or
- 7.5 metres where dragon ties in accordance with NZS3604:2011 have been installed, or
- 12 metres with a GIB® plasterboard ceiling diaphragm.

The construction of ceiling diaphragms is described in detail on p.18–20.

NZS3604:2011 requires that no bracing line shall have a capacity less than the greater of:

- 100 Bracing Units (BUs), or
- 15 x the external wall length (BUs) for bracing lines coinciding with external walls, or
- 50% of the total demand (D) divided by the number of lines (n) in the direction being considered (BUs).

FIGURE 4: BRACING GRID LAYOUT

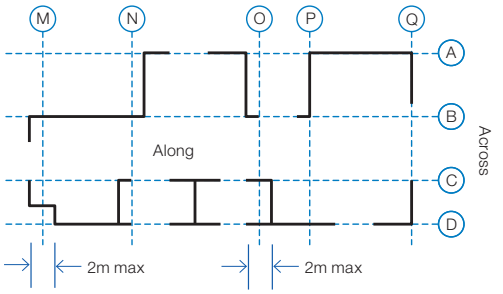

The NZS3604 ‘rules’ are merely minimum guidelines and compliance with them does not in itself ensure even distribution. The designer is responsible for checking distribution. Poor distribution can cause torsional effects and localised or more significant damage in an earthquake event.

GIB EZYBRACE® SYSTEMS

The GIB EzyBrace® Specification Numbering System (and sub-components thereof) is protected by copyright and makes specification and identification of GIB EzyBrace® Systems transparent.

- 'GS' stands for GIB® Standard.
- 'BL' for GIB Braceline®.
- 'P' for plywood.
- '1' and '2' for linings one or both sides.
- ‘N’ stands for 'no specific panel hold-down fixings'.
- 'H' stands for 'specific panel hold-down fixing' required.
- 'NOM' stands for 'nominal plasterboard fixing'. This refers to the standard fixing method used to install plasterboard as shown in the current GIB® Site Guide.

Where specific hold-down fixings are specified, refer to p.15-16. GIB HandiBrac® is fully contained within the framing cavity and does not interfere with lining installation and quality of finish.

Where no specific hold-down fixings are required, the minimum NZS3604:2011 bottom plate fixings apply.

Full bracing element construction details are provided in this technical literature.

Further general design and construction information can also be found in our GIB® Bracing Supplement by visiting gib.co.nz/library.

Specifying GIB EzyBrace® elements (minimum wall length 400mm)

Inside lining external walls.	Nominate available lengths of wall as GS1-N elements. Use BL1-H if higher ratings are required. If the other side of the frame is lined with plywood consider GSP-H or BLP-H elements or use alternative proprietary bracing systems.
Internal walls (only one side available for bracing).	Nominate available lengths of wall as GS1-N elements. Use BL1-H if higher ratings are required.
Internal walls (both sides available for bracing).	Nominate available length of wall as GS2-NOM elements. Change to GS1-N if higher ratings are required. Change to GS2-N if higher ratings are required. Change to BLG-H for even higher ratings. Consider GSP-H or BLP-H if the opposite side is lined with plywood.

KDC - Approved Building Consent Document - BC210441 - Pg 206 of 512 - 30/08/2021 - ComplyNZ

Bracing demand

GIB EZYBRACE® CALCULATOR

The GIB EzyBrace® calculator is a software tool to determine the wind and earthquake bracing demand and to design the bracing resistance for light timber-framed buildings constructed in accordance with NZS 3604:2011.

The updated GIB EzyBrace® calculator combines an up-to-date user-friendly interface with the latest knowledge relating to the performance of GIB® plasterboard in light timber-framed structures when subjected to high winds or earthquakes. The calculator can be down-loaded free of charge by visiting gib.co.nz/ezybrace and can be installed on either Microsoft® or Apple® Mac environments.

DEMAND

Wind and Earthquake 'Demand' calculates the forces a structure must be able to resist during its 'design life'. The GIB EzyBrace® calculator's Demand sheet determines the number of Bracing Units required depending on building location, building dimensions and materials used. The Demand sheet closely follows the familiar format of our Excel based GIB EzyBrace® calculator, and includes additional features such as a pop-up help facility explaining required input.

Bracing resistance sheets ('tabs') are added depending on the building specification entered. For example, subfloor bracing resistance tabs only show when a 'subfloor' foundation type has been selected.

The Demand sheet gives the designer the option to select a longer earthquake return period which represents a higher earthquake design force. The default for buildings constructed in accordance with NZS3604:2011 is an earthquake that has a 10% chance of being exceeded within the assumed 50 year 'design life' of a light timber framed residential structure, a 'return period' of 500 years.

Many commercial and public buildings are designed for the more stringent requirement of a 10% probability of exceedance in a 100 or 250 year life expectancy.

A screen shot of the GIB EzyBrace® 2016 Demand Sheet and Help Facility is shown in figure 5.

FIGURE 5: GIB EZYBRACE® 2016 — DEMAND CALCULATION SHEET AND 'POP UP' HELP FACILITY

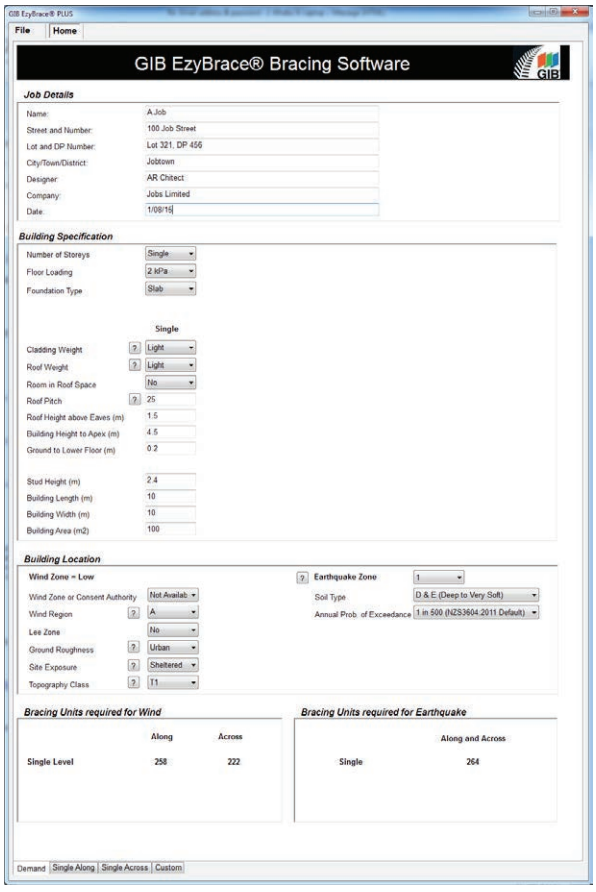

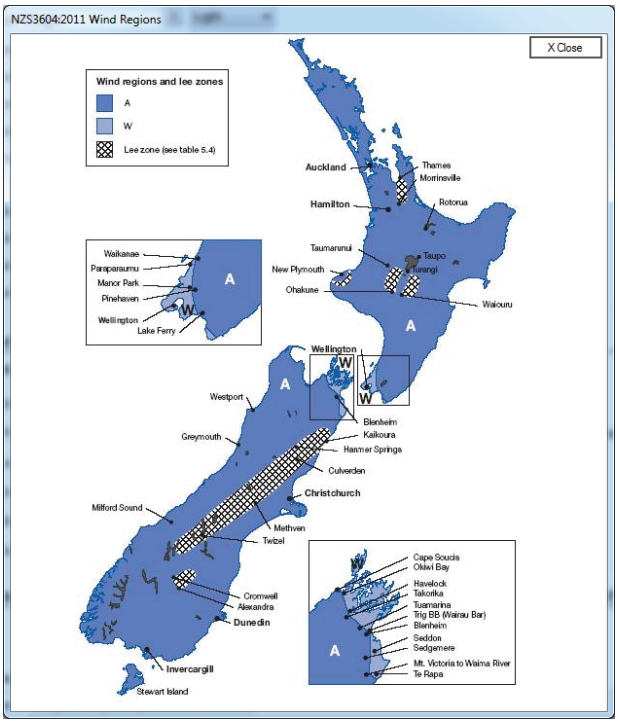

Download GIB EzyBrace® 2016 design software from gib.co.nz/ezybrace

KDC - Approved Building Consent Document - BC210441 - Pg 207 of 512 - 30/08/2021 - ComplyNZ

Software functionality

Innovations adopted in the GIB EzyBrace® 2016 bracing 'resistance' calculation sheets include the ability to easily add and delete lines and elements during calculations.

The software compares bracing resistance achieved with demand and for wall bracing lines incorporating external walls, the external wall length can now be entered to check minimum bracing units required on that line. The NZS 3604:2011 rules and associated software output are not the only check. Designers must additionally check the building layout to ensure adequate bracing distribution.

Figures 6 and 7 show screen shots of the Wall and Subfloor Resistance Sheets respectively.

FIGURE 6: GIB EZYBRACE® 2016 — WALL BRACING RESISTANCE CALCULATION SHEET

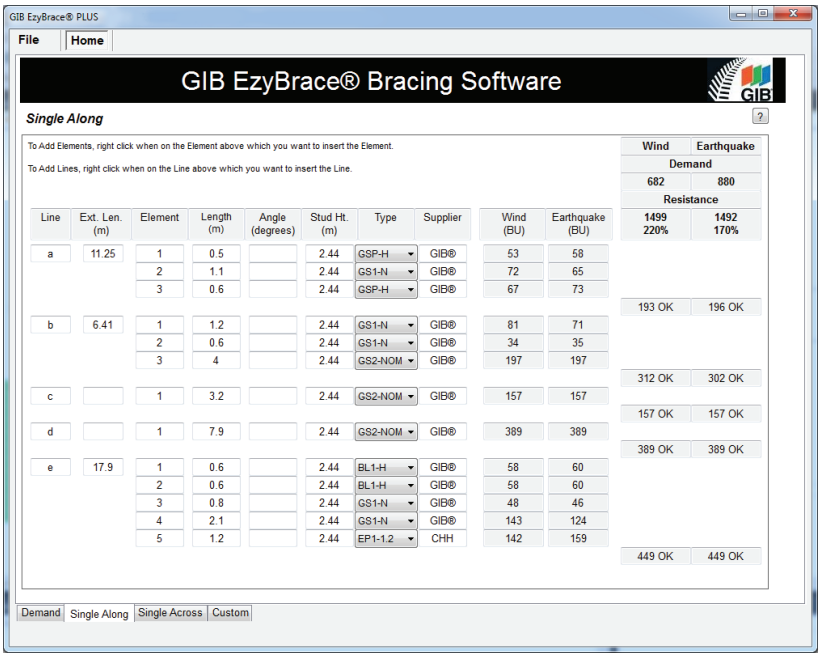

FIGURE 7: GIB EZYBRACE® 2016 — SUBFLOOR BRACING RESISTANCE CALCULATION SHEET

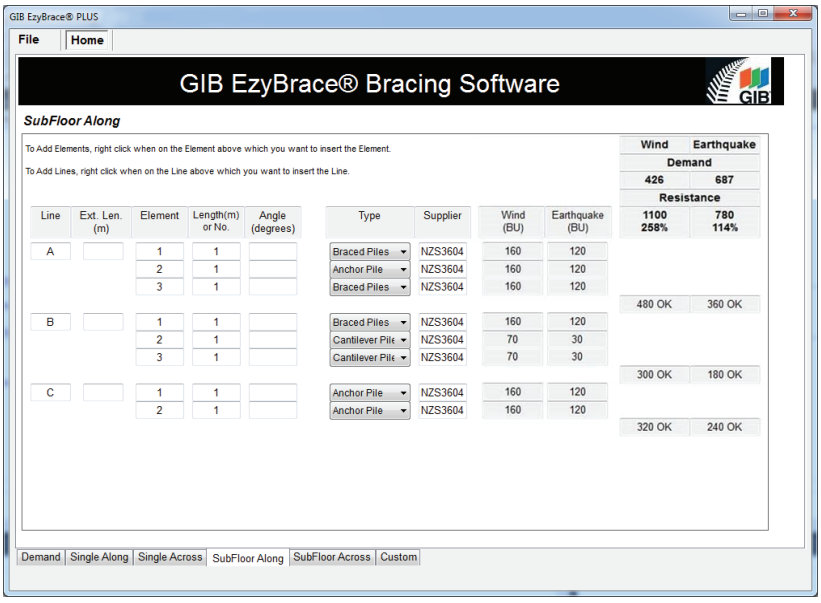

Download GIB EzyBrace® 2016 design software from gib.co.nz/ezybrace

KDC - Approved Building Consent Document - BC210441 - Pg 208 of 512 - 30/08/2021 - ComplyNZ

Software functionality

Custom elements can be entered by accessing the 'custom' tab as shown in figure 8.

FIGURE 8: GIB EZYBRACE® 2016 — CUSTOM ELEMENTS SHEET

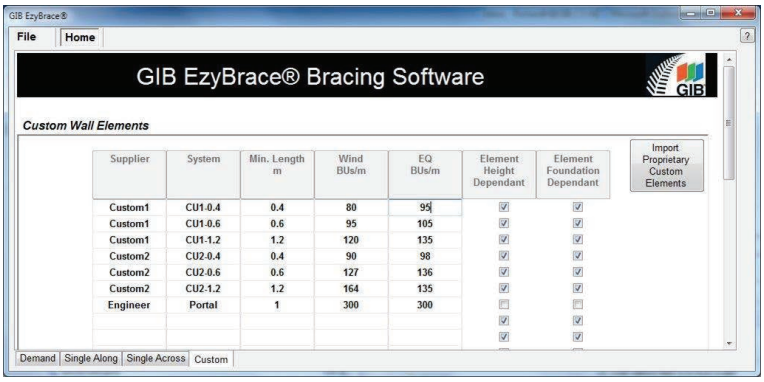

Note: Values and systems shown in Custom Elements Sheets are for illustrative purposes only.

Help can be accessed by pressing the ? symbol which displays a window with further information.

The GIB EzyBrace® 2016 software has a number of options that can be accessed via the File tab at the top left hand corner of the window. The options include: New, Save, Save As, Open, Recent and Print.

- The New option closes any opened job ready for the input of a new job.
- The Save option saves the currently opened job to the same filename and the Save As option saves the job to a new filename.
- The Open option prompts for the name of an existing job.
- The Recent option displays a list of the ten latest jobs and allows for the selection of one of these jobs to be opened.
- The Print option displays the print screen. In this screen, a print preview is displayed. The print preview can be copied to the clipboard by clicking the right-hand mouse button. Also on the print screen is the option to choose which pages are to be printed and the option to print the output to a portable data format, PDF, file.
- The Print Screen View is shown in figure 9.

FIGURE 9: GIB EZYBRACE® 2016 — PRINT SCREEN VIEW

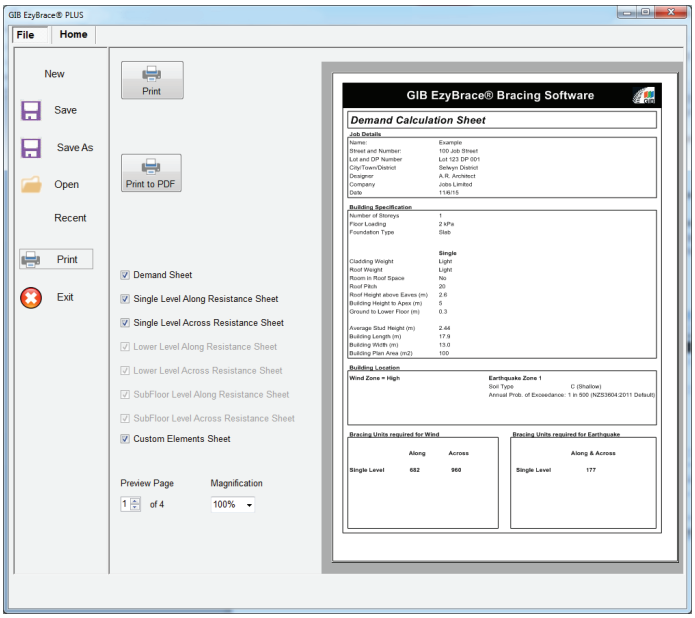

Download GIB EzyBrace® 2016 design software from gib.co.nz/ezybrace

KDC - Approved Building Consent Document - BC210441 - Pg 209 of 512 - 30/08/2021 - ComplyNZ

GIB® plasterboard linings

When fixing part sheets of GIB® plasterboard, a minimum sheet width of 300mm applies for bracing elements. Horizontal fixing is recommended. If fixing vertically, full height sheets shall be used where possible. Where sheet end butt joints are unavoidable they must be formed over nogs or over the studs and fastened at 200mm centres. Alternatively, and preferably, sheet end butt joints may be back-blocked.

When a GIB® Bracing element has been designated for a section of wall, BU ratings cannot be increased by incorporating additional proprietary bracing elements within that same section of wall.

LIMITATIONS

- GIB® plasterboard must be stacked flat and protected from the weather.
- GIB® plasterboard must be handled as a finishing material.
- GIB® plasterboard in use must not be exposed to liquid water or be installed in situations where extended exposure to humidities above 90% RH can reasonably be expected.
- GIB EzyBrace® Systems must not be used in showers or behind baths.
- It is highly recommended not to install GIB® plasterboard in any situation where external claddings are not in place or the property is not adequately protected from the elements.
- If GIB® plasterboard is installed under these conditions, the risk of surface defects such as joint peaking or cracking is greatly increased.

GIB EzyBrace® Systems in water-splash areas

When GIB® plasterboard is installed in locations likely to be frequently exposed to liquid water it must have an impervious finish. Examples are adhesive fixed acrylic shower linings or ceramic tiles over an approved waterproof membrane over GIB Aqualine®. The NZBC requires 15 years durability in these situations. Bracing elements are required to have a durability of 50 years. Bracing elements are not to be located in shower cubicles or behind baths because of durability requirements, the likelihood of renovation, and practical issues associated with fixing bracing elements to perimeter framing members. Otherwise GIB EzyBrace® Systems can be used in water-splash areas as defined by NZBC Clause E3, provided these are maintained impervious for the life of the building.

For futher design details refer to the current GIB Aqualine® Wet Area Systems literature.

Renovation

When relining walls during the process of renovation, ensure that bracing elements are reinstated (check the building plans).

Openings in bracing elements

SMALL OPENINGS

Small openings (e.g. power outlets) of 90 x 90mm or less may be placed no closer than 90mm to the edge of the braced element. A block may need to be provided alongside the perimeter stud as shown below.

LARGE OPENINGS

Openings above 90 x 90mm such as switch boards, recessed cabinets and TV's etc. should be placed outside of the bracing element or locate bracing on the other side of the wall framing.

FIGURE 10: SMALL OPENINGS IN BRACING ELEMENTS

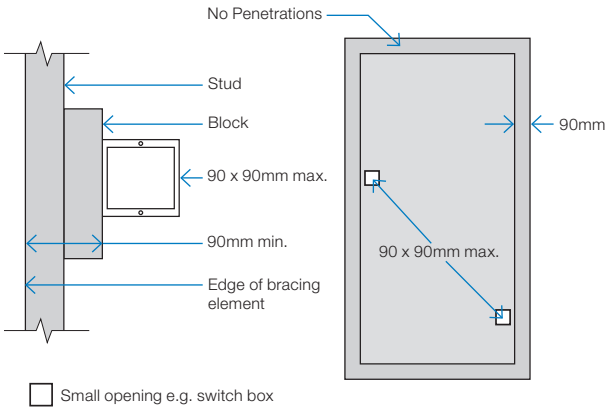

GEB001

FIGURE 11: LARGE OPENINGS AND BRACING ELEMENTS

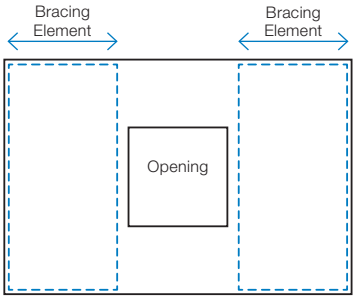

KDC - Approved Building Consent Document - BC210441 - Pg 210 of 512 - 30/08/2021 - ComplyNZ

Timber framing

General framing requirements such as grade, spacings and installation shall comply with the provisions of NZS 3604:2011. To achieve the published bracing performance the minimum actual framing dimensions are 90 x 45mm for external walls and 70 x 45mm for internal walls.

As a minimum the use of Kiln Dried Stress Graded timber for all wall, roof and mid-floor framing members is recommended.

GIBFix® Framing System (alternative layout)

Practices recommended as part of the GIBFix® Framing System aim to increase timber framing efficiencies, reduce reliance on unnecessary framing at wall junctions and minimise surface imperfections that commonly arise from constructing plasterboard junctions over multiple timber members. GIBFix® Angles fixed to a single timber framing member are introduced to tie together plasterboard junctions, improving seismic resilience and decrease the risk of future defects due to timber movement. The GIBFix® Framing System can be used in conjunction with the GIB EzyBrace® System.

Note: GIBFix® Angles and 32mm x 7g GIB® Grabber® Dual Thread Screws may also be used in traditional wall framing layouts and in GIB EzyBrace® Systems.

When the GIBFix® Framing System is used a minimum of 2 equally spaced nogs for walls between 2.4m and 3m in height are required at corners and wall junctions.

When used in GIB EzyBrace® systems GIBFix® Angles must run from top to bottom on all applicable studs. If 2 GIBFix® Angles are required on a stud they must be overlapped by a minimum of 300mm with 2/32mm 7g GIB® Grabber® Dual Thread Screws penetrating through both GIBFix® Angles.

For full specification details refer to GIBFix® Framing System literature available at gib.co.nz/gibfix.

Guidelines for intersection walls

GIB® Bracing Elements may have intersecting walls with a minimum length of 200mm. Fasteners are required around the perimeter of the bracing element. Vertical joints at T-junctions shall be fixed and jointed as specified for intermediate sheet joints. The bracing element length must be no less than 900mm.

Where a Wall Bracing Element is interrupted by a T-junction the element is deemed to be continuous for the whole length (900mm minimum in the example illustrated).

When fixing part sheets of GIB® plasterboard to the side of a T-junction, a minimum width of 300mm applies for bracing elements. See figures 12 and 13.

FIGURE 12: WALL INTERSECTION (TRADITIONAL WALL FRAMING)

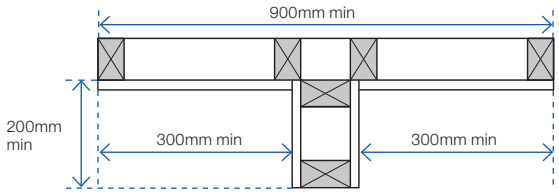

GEB002

FIGURE 13: WALL INTERSECTION (GIBFIX® FRAMING SYSTEM)

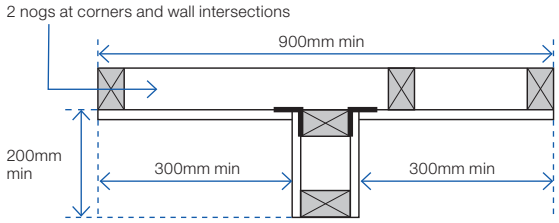

GEB003

FIGURE 14: CORNER INTERSECTION (GIBFIX® FRAMING SYSTEM)

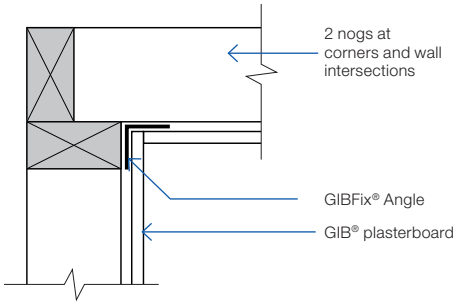

GFS001

FIGURE 15: WALL INTERSECTION FASTENER PLACEMENT

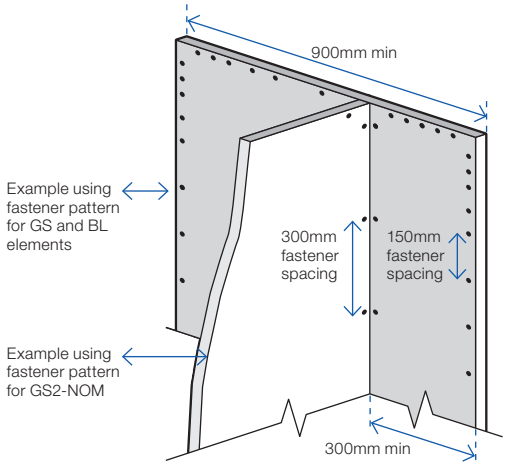

Junction

Min 32mm x 6g GIB® Grabber® High Thread or 32mm x 7g GIB® Grabber® Dual Thread Screws @ 300mm ctrs each side.

KDC - Approved Building Consent Document - BC210441 - Pg 211 of 512 - 30/08/2021 - ComplyNZ

Top plate connections

For top plate connections refer to NZS3604:2011 section 8.7.3.

Parapets and gable end walls

Bracing elements must be fixed from top plate to bottom plate. Fixing to a row of nogs is not acceptable unless either:

A continuous member such as an ex 90 x 45mm ribbon plate is fixed across the studs just above a row of nogs at the ceiling line, as shown in figure 16.

or

GIBFix® Angle as shown in figure 17. The angle is fixed to a row of nogs with 30 x 2.5mm galv flat head nails or 32mm x 7g GIB® Grabber® Dual Thread Screws at 300mm centres.

Bottom plate fixing

TIMBER FLOOR

For elements with an 'N' specification use 2/100 x 3.75mm hand or 3/90 x 3.15mm power-driven nails at 600mm centres.

In addition, for elements with an 'H' specification, use GIB HandiBrac® panel hold-down fixings at each end of the bracing element, see p.16.

CONCRETE FLOOR — EXTERNAL WALL BRACING ELEMENTS

For bracing elements with an 'N' specification fix external wall plates in accordance with NZS 3604:2011.

Use GIB HandiBrac® panel hold-down fixings at each end of bracing elements with an 'H' specification and minimum intermediate fixings as required by NZS 3604:2011.

CONCRETE FLOOR — INTERNAL WALL BRACING ELEMENTS

For bracing elements with an 'N' specification fix plates in accordance with NZS 3604:2011 or use 75 x 3.8mm shot-fired fasteners with 16mm discs spaced at 150 and 300mm from end-studs and 600mm centres thereafter.

For bracing elements with an 'H' specification use GIB HandiBrac® panel hold-down fixings at each end of the element and minimum intermediate fixings as required by NZS 3604:2011.

FIGURE 16: PARAPETS AND GABLE ENDS WITH RIBBON PLATE

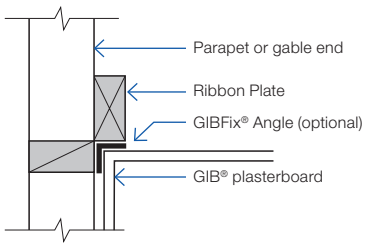

FIGURE 17: PARAPETS AND GABLE ENDS WITH GIBFIX® ANGLE

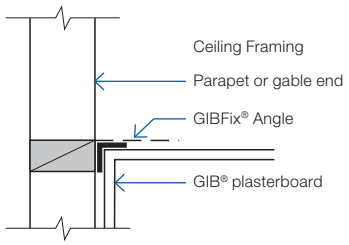

GFS003

BOTTOM PLATE FIXINGS FOR GIB® BRACING ELEMENTS

Brace type	Concrete slabs		Timber floors
	External wall	Internal wall	External and Internal walls
GS1-N	As per NZS 3604:2011. No specific additional fastening required.	As per NZS 3604:2011. Alternatively use 75 x 3.8mm shot-fired fasteners with 16mm discs, 150mm and 300mm from each end of the bracing element and at 600mm thereafter.	Pairs of 100 x 3.75mm flat head hand driven nails or 3/90 x 3.15mm power driven nails at 600mm centres in accordance with NZS 3604:2011.
GS2-N	Not applicable.		
GS2-NOM			
GSP-H BL1-H BLP-H	Intermediate fastenings to comply with NZS 3604:2011 In addition: GIB HandiBrac® fixings or metal wrap-around strap fixings and bolt as illustrated on p.15 and 16.		Pairs of 100 x 3.75mm flat head hand driven nails or 3/90 x 3.15mm power driven nails at 600mm centres in accordance with NZS 3604:2011. In addition: GIB HandiBrac® fixings or metal wrap-around strap fixings and bolt as illustrated on p.15 and 16.
BLG-H	Not applicable	As for GSP-H, BL1-H, BLP-H on concrete slab as illustrated on p.15 and 16.	

KDC - Approved Building Consent Document - BC210441 - Pg 212 of 512 - 30/08/2021 - ComplyNZ

Bracing strap installation

Care needs to be taken with the installation of the bracing strap. It should be checked in to be flush with the face of the stud providing a flat substrate for the plasterboard and positioned in such a way that the corner fastenings of the bracing element are not affected by it. Keeping the strap to the edge of the end stud as shown will allow the corner fastenings to be installed without having to penetrate the bracing strap.

Concrete floor	Timber floor
400 x 25 x 0.9mm galvanised strap to pass under the plate and up the other side of the stud. Six 30 x 2.5mm flat head galvanised nails to each side of the stud. Three 30 x 2.5mm flat head galvanised nails to each side of the plate. Hold down bolt with 50 x 50 x 3mm washer to be fitted within 80mm of the end of the element.	
Internal wall	
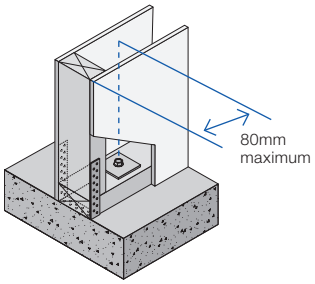 GEB004	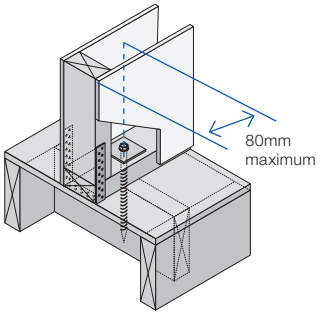 GEB005
External wall	
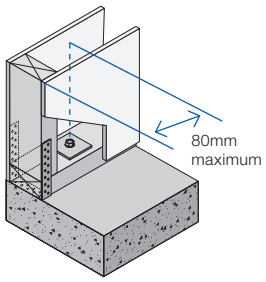 GEB006	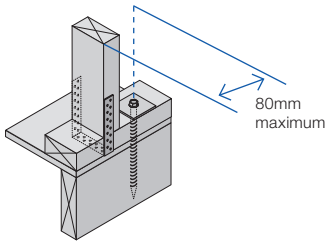 GEB007
Note: Where applicable drawings have been produced for CAD design. These are identified by a unique number in the bottom corner of each detail box that can be found at gib.co.nz/library.	2/300 x 25 x 0.9mm galvanised straps with six 30 x 2.5mm flat head galvanised nails to each stud and into the floor joist and three nails to the plate. Block to nog fixed with 3/100 x 3.75mm nails to stud.
	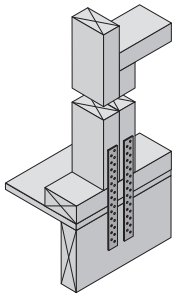 GEB008

Hold-down fastener requirements	
Concrete floor	Timber floor
A mechanical fastening with a minimum characteristic uplift capacity of 15kN fitted with a 50 x 50 x 3mm square washer within 80mm of the ends of the bracing element.	12 x 150mm galvanised coach screw fitted with a 50 x 50 x 3mm square washer within 80mm of the ends of the bracing element

KDC - Approved Building Consent Document - BC210441 - Pg 213 of 512 - 30/08/2021 - ComplyNZ

GIB HandiBrac® installation

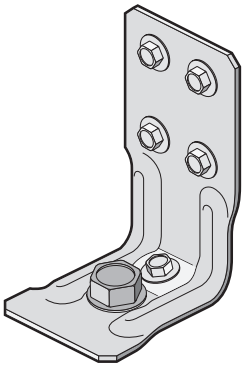

Developed in conjunction with MiTek™, the GIB HandiBrac® has been designed and tested by Winstone Wallboards for use in GIB EzyBrace® elements that require hold-downs. The GIB HandiBrac® is a substitute for bottom plate hold-down straps.

- Quick and easy to fit.
- May be fitted at any stage before lining.
- Framing face is clear to allow flush lining.
- Easily inspected.

The GIB HandiBrac® with BOWMAC® blue head screw bolt is suitable for timber and concrete floors constructed in accordance with NZS 3604:2011.

Concrete floor		**Timber floor**	
External walls	Internal walls	External walls	Internal walls
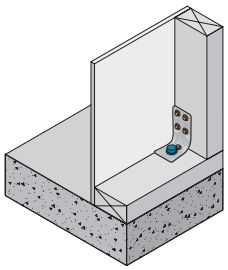 GEB009	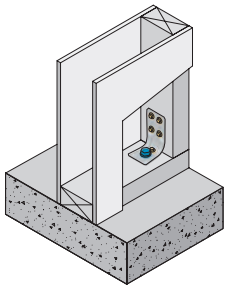 GEB010	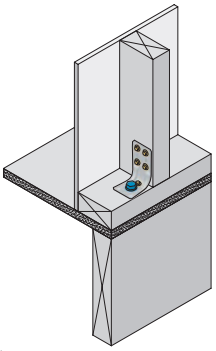 GEB011	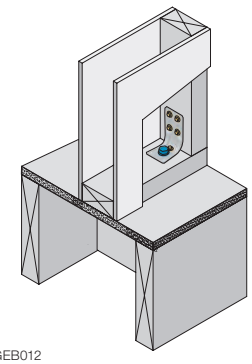 GEB012
Position GIB HandiBrac® as close as practicable to the internal edge of the bottom plate.	Position GIB HandiBrac® at the stud/plate junction and at mid-width of plate.	Position GIB HandiBrac® flush with the outside stud face, as close as practicable to the centre of the boundary joist.	Position GIB HandiBrac® in the centre of floor joist or full depth solid block.
Hold-down fastener requirements			
A mechanical fastening with a minimum characteristic uplift capacity of 15kN or use supplied BT10/140 screwbolt in GIB HandiBrac® pack.		12 x 150mm galvanised coach screw or use supplied BT10/140 screwbolt in GIB HandiBrac® pack.	

KDC - Approved Building Consent Document - BC210441 - Pg 214 of 512 - 30/08/2021 - ComplyNZ

GIB HandiBrac® placement with GIBFix® Framing System for concrete floors

Figure 18 shows the preferred positioning of the GIB HandiBrac® panel hold-down brackets within the GIBFix® Framing System layout and where they are required by bracing systems with an 'H' in the specification code.

Note that, in corners and at wall junctions, a single GIB HandiBrac® can serve 'H' type bracing elements in both directions, but additional intermediate concrete anchors may need to be installed to meet the minimum requirements of NZS 3604:2011 for bottom plate fixing.

The GIB HandiBrac® is fixed to the stud which has the GIBFix® Angle.

For bracing elements with sheet material both sides of the wall connect corner studs using 8/90mm gun nails as shown in figure 19.

TIMBER FLOORS

For timber floors bolt fixing in to solid joist or block is required, as shown on p 15.

FIGURE 18: GIB HANDIBRAC® PLACEMENT WITH GIBFIX® FRAMING SYSTEM LAYOUT

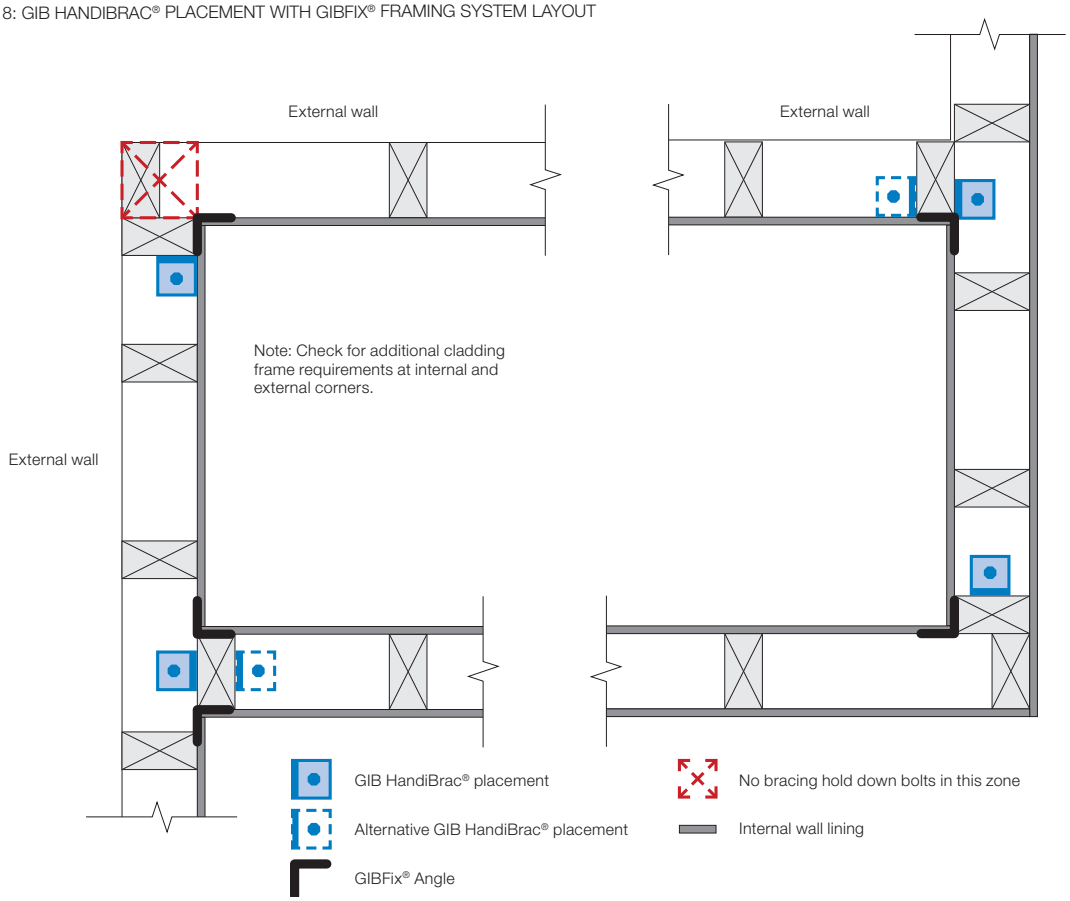

GEB013

FIGURE 19: STUD CONNECTION FOR 'H' TYPE BRACING ELEMENTS WITH SHEET MATERIAL BOTH SIDES

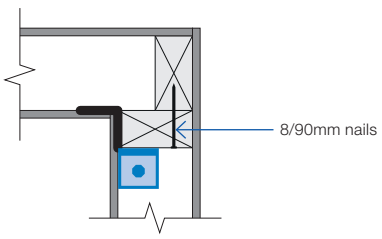

GEB014

KDC - Approved Building Consent Document - BC210441 - Pg 215 of 512 - 30/08/2021 - ComplyNZ

Ceiling diaphragms

GIB® plasterboard ceiling diaphragms are stiff and strong horizontal elements which effectively transfer loads to bracing walls. They themselves do not have a bracing unit rating but are used when bracing lines exceed 6m separation. The basic shape of a ceiling diaphragm is square or rectangular. Protrusions are permitted but cut-outs are not. The length of a ceiling diaphragm shall not exceed twice its width. Dimensions are measured between supporting bracing lines. Supporting bracing lines shall have a bracing capacity no less than the greater of 100 bracing units or 15 bracing units per metre of diaphragm dimension, measured at right angles to the line being considered, see figure 21.

Limitations for GIB® plasterboard ceiling diaphragms

Ceiling diaphragms may be constructed using any GIB® plasterboard provided perimeter fixing is at;

150mm centres for: Diaphragms up to 7.5m in length, no steeper than 15°.

100mm centres for: Diaphragms up to 7.5m in length, no steeper than 45°. Diaphragms up to 12m in length, no steeper than 25°.

Diaphragms outside these parameters must be specifically designed.

General fixing requirements for GIB® Ceiling Diaphragms:

- Linings must be installed over the entire area of the diaphragm.
- Fastening must be no less than 12mm from sheet edges and not less than 18mm from sheet ends.
- Sheets must be supported by framing members (e.g., ceiling battens) spaced at no more than 500mm centres for 10mm GIB® plasterboard and at no more than 600mm centres for 13mm GIB® plasterboard.
- Sheets within the diaphragm area may be fastened and finished conventionally in accordance with the publication entitled, “GIB® Site Guide”. All joints shall be GIB® Joint Tape reinforced and stopped. It is recommended that sheet butt joints are formed off framing and back-blocked (see “GIB® Site Guide”).
- Use full width sheets where possible. At least 900mm wide sheets with a length not less than 1800mm shall be used. Sheets less than 900mm wide but no less than 600mm may be used provided all joints with adjacent sheets are back-blocked (see “GIB® Site Guide” and figure 22).
- Fasteners are placed at the specified centres around the ceiling diaphragm with the corners fastened using the GIB EzyBrace® fastener pattern.

FIGURE 20: PROTRUSIONS AND CUTOUTS

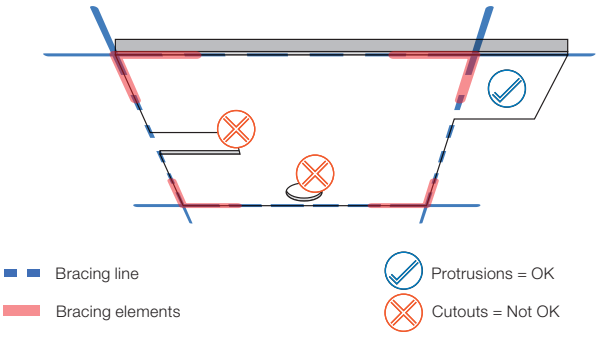

FIGURE 21: DIAPHRAGM BRACING LINING SPACINGS

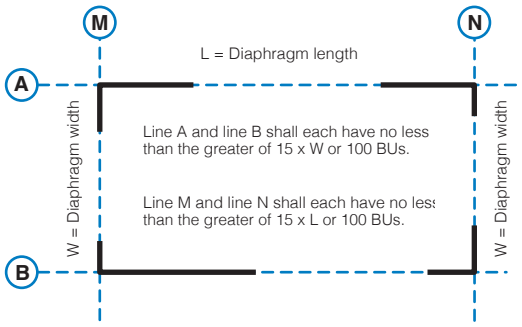

FIGURE 22: GIB® CEILING DIAPHRAGM SHEET WIDTHS AND LENGTHS

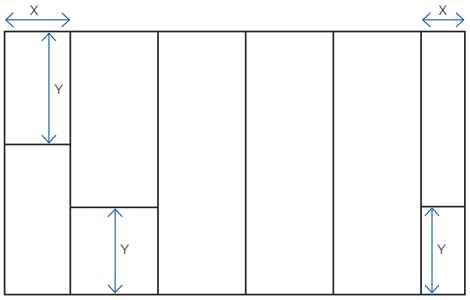

X = 900mm min or 600–900mm min provided all adjacent joints are back-blocked.

Y = 1800mm min sheet lengths at ends of ceiling diaphragms.

FIGURE 23: GIB EZYBRACE® FASTENER PATTERN

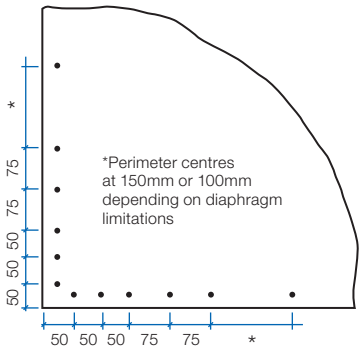

Unless stated all fastener spacings are maximums.

GEB015

KDC - Approved Building Consent Document - BC210441 - Pg 216 of 512 - 30/08/2021 - ComplyNZ

Ceiling battens in ceiling diaphragms

Ceiling diaphragms may be constructed using steel or timber ceiling battens.

Battens shall be spaced at a maximum of:
- 500mm for 10mm GIB® plasterboard.
- 600mm for 13mm GIB® plasterboard.

Timber battens shall be fixed in accordance with the requirements of NZS 3604:2011.

Metal battens shall be GIB® Rondo® battens with two external flanges of 8mm to allow direct screw fixing to roof framing.

GIB® Rondo® metal battens shall be fixed with 2/32mm x 8g GIB® Grabber® Wafer Head Self Tapping screws to supporting framing.

GIB® Rondo® metal battens must be fixed directly to the roof framing. If a clip system has been used, a timber block (min 300mm) or a continuous timber member can be fixed alongside the bottom chord to permit a direct connection to the batten, see figure 26.

For GIB® Rondo® metal battens, a GIB® Rondo® metal channel or metal angle is required at the perimeter of the diaphragm. The perimeter channel shall be fastened to the top plate with 32mm x 8g GIB® Grabber® Wafer Head Self Tapping screws or 32mm x 7g GIB® Grabber® Dual Thread screw at 300mm centres maximum.

Linings are fastened to metal using 25mm x 6g GIB® Grabber® Self Tapping screws and to timber framing using 32mm x 6g GIB® Grabber® High Thread screws. Alternatively 32mm x 7g GIB® Grabber® Dual Thread screws can be used in both cases. Fastener centres are specified on p.18.

Coved ceiling diaphragms can be achieved by using nominally 32 x 32 x 0.55mm proprietary galvanised metal angles ("back-flashing") at the changes in direction. These angles shall be:
- Fastened at 300mm on each edge to metal battens using 32mm x 8g GIB® Grabber® Wafer Head Self Tapping screws or 32mm x 7g GIB® Grabber® Dual Thread screws.
- Fastened to timber framing using 32mm x 7g GIB® Grabber® Dual Thread screws when linings are installed.

FIGURE 26: GIB® RONDO® METAL CEILING BATTEN INSTALLATION

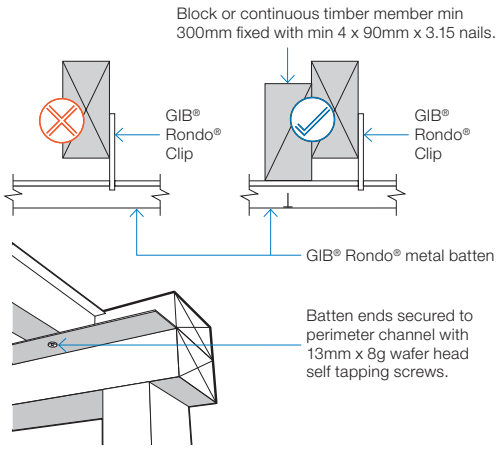

GEB016

FIGURE 27: GIB® RONDO® METAL CEILING BATTENS WITH CORNER ANGLES

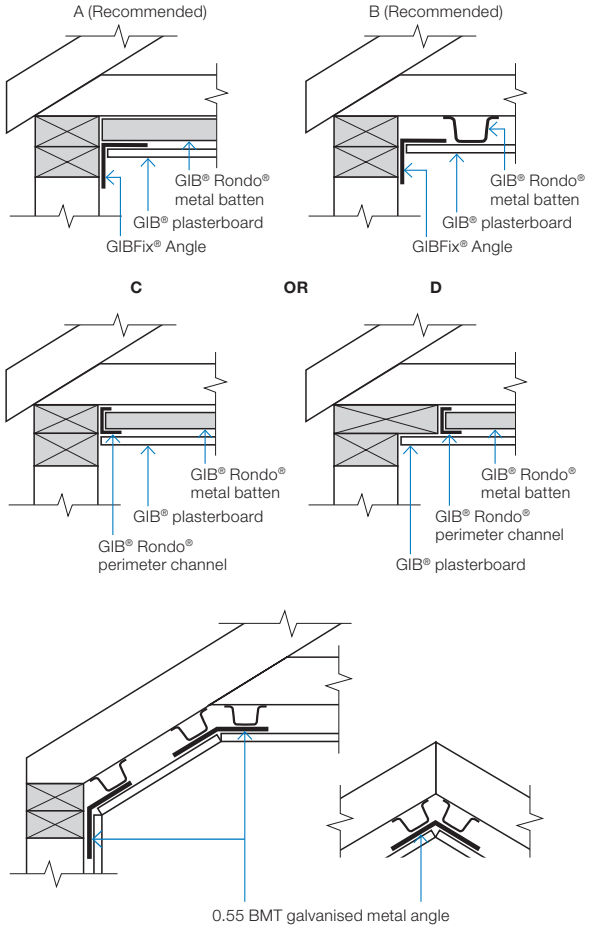

GEB017

FIGURE 28: TIMBER CEILING BATTENS*

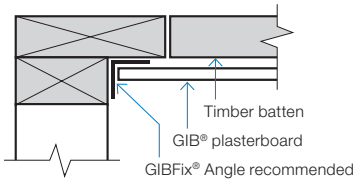

GEB018

KDC - Approved Building Consent Document - BC210441 - Pg 217 of 512 - 30/08/2021 - ComplyNZ

Openings in ceiling diaphragms

SMALL OPENINGS

Small opening (e.g. down lights) of 90 x 90mm or less may be placed no closer than 90mm to the edge of the ceiling diaphragm.

LARGE OPENINGS

Openings are allowed withing the middle third of the diaphragms length and width. Fixing of sheet material to opening trimmers shall be at 150mm centres. Neither opening dimension shall exceed a third of the diaphragm width. Larger openings or openings in other locations require specific engineering design.

Where fireplace flue or range hood openings are required in a ceiling diaphragm use a galvansed metal backing plate as shown in figure 25, with a maximum hole diameter of 350mm.

Figure 25 can also be used for range hood openings in walls.

For information on openings in ceiling diaphragms contact the GIB® Helpline on 0800 100 442.

FIGURE 24: LARGE OPENINGS IN CEILING DIAPHRAGMS

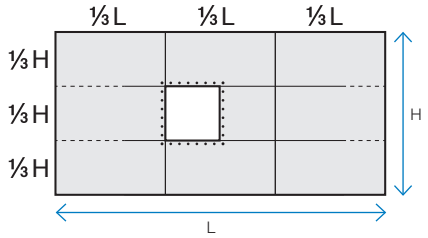

FIGURE 25: FIREPLACE FLUES AND RANGE HOOD OPENINGS

Section view

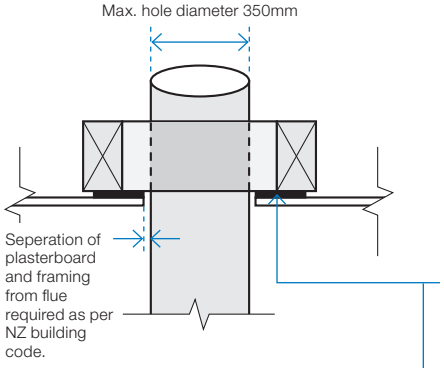

Plan view

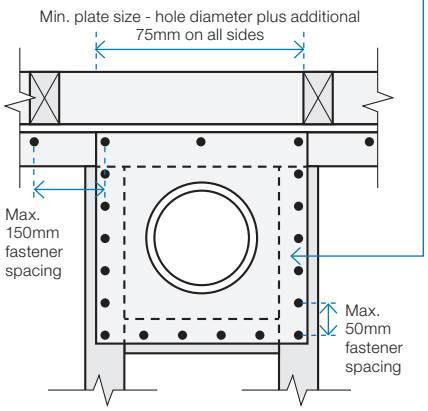

Steel plate
0.55 BMT Galvanised sheet Max. opening 350mm diameter. Installed prior to GIB® plasterboard.

Framing
90 x 45mm framing trimmed to provide extra fixing.

GIB® plasterboard ceiling
Installed over the steel plate and into framing using a minimum of 32mm x 6g GIB® Grabber High Thread or 32mm x 7g GIB® Grabber Dual Thread screws at 50mm max centre spacing.

Plasterboard ceiling not shown in plan view

KDC - Approved Building Consent Document - BC210441 - Pg 218 of 512 - 30/08/2021 - ComplyNZ

Length of GIB EzyBrace® elements ('N' Type)

The length of GIB EzyBrace® elements with an 'N' extension (requiring standard NZS3604:2011 plate connections) can be taken as the full frame length measured from the outside of the end-stud to the opening face as illustrated in figures 29-32.

'N' type GIB EzyBrace® elements are identified by GIB® specification numbers GS1-N, GS2-N and GS2-NOM

The dimension 'L' shall not be less than 400mm.

Perimeter bracing fixing for linings of both 'H' and 'N' type elements is along the top and bottom plates, end stud, and doubling stud immediately adjacent to the opening.

Fastener spacings and diagram scales shown in Figures 29–32 are indicative only. Refer to p.23–30 for construction details.

FIGURE 29: GS BRACING ELEMENTS (OPTION A)

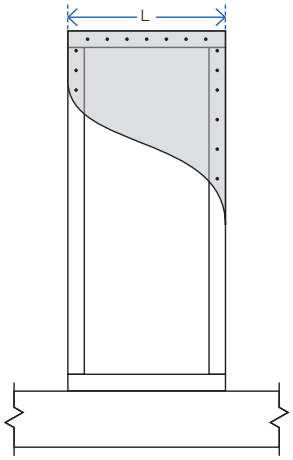

GS1-N, GS2-N elements
'L' indicates the length of the bracing element

FIGURE 30: GS BRACING ELEMENTS (OPTION B)

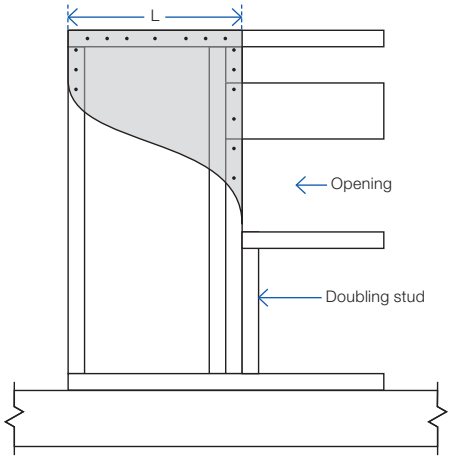

GS1-N, GS2-N elements
'L' indicates the length of the bracing element

FIGURE 31: GS BRACING ELEMENTS (OPTION C)

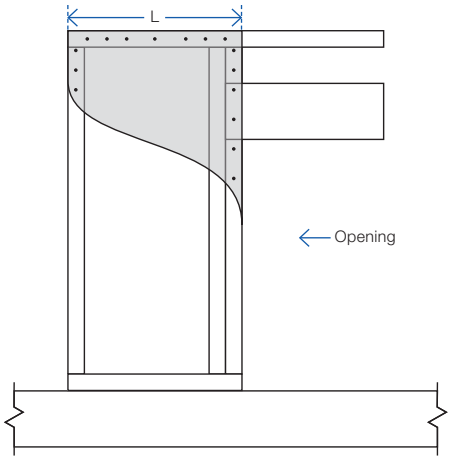

GS1-N, GS2-N elements
'L' indicates the length of the bracing element

FIGURE 32: GS BRACING ELEMENTS (OPTION D)

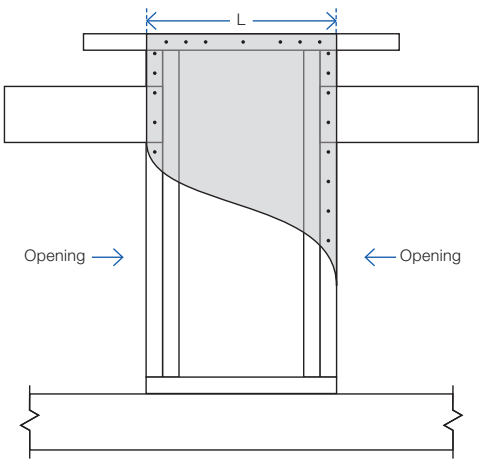

GS1-N, GS2-N elements
'L' indicates the length of the bracing element

KDC - Approved Building Consent Document - BC210441 - Pg 219 of 512 - 30/08/2021 - ComplyNZ

Length of GIB EzyBrace® elements ('H' Type)

GIB EzyBrace® elements with an 'H' extension (requiring special panel hold-down fixings) can be used when the dimension 'L' as illustrated in figures 33–36 is 400mm or more.

'H' type GIB EzyBrace® elements are identified by GIB® specification numbers GSP-H, BL1-H, BLG-H and BLP-H.

The length of an 'H' type element is not only determined by the sheet material, but also by the placement of the hold-down fixings.

Hold-down fixings cannot be placed closer together than what is shown for the standard panel in figure 33.

Hold-down fixings can be placed under windows provided sill trimming studs beneath the opening are connected to the bracing element using 8/90mm gun nails, as illustrated in figure 34.

Spike doubling stud to trimming stud using a minimum of 2/90mm gun nails at 600mm centres. Lintel straps (where required for wind uplift) should be checked in and be located away from the bracing element fasteners.

Perimeter bracing fixing for linings of both 'H' and 'N' type elements is along the top and bottom plates, end stud, and doubling stud immediately adjacent to the opening as indicated in figures 34-36.

When using bracing straps, installed in accordance with p.17, fix the strap to the same framing member as shown for the GIB Handibrac® below, and install the adjacent anchor bolt in the same position as the GIB HandiBrac® bolt.

Fastener spacings and diagram scales shown in figures 33–36 are indicative only. Refer to p.23–30 for construction details.

FIGURE 33: BL BRACING ELEMENTS (OPTION A)

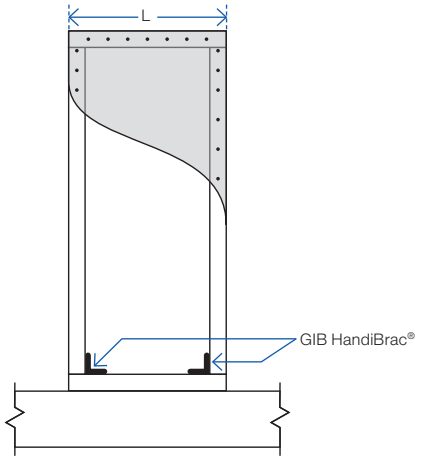

'H' type elements with specific hold downs
'L' indicates the length of the bracing element

FIGURE 34: BL BRACING ELEMENTS (OPTION B)

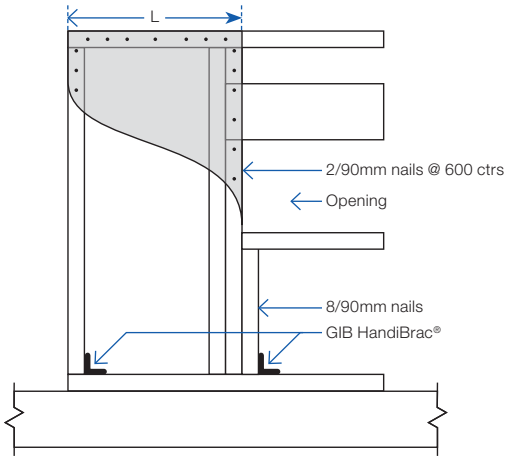

'H' type elements with specific hold downs
'L' indicates the length of the bracing element

FIGURE 35: BL BRACING ELEMENTS (OPTION C)

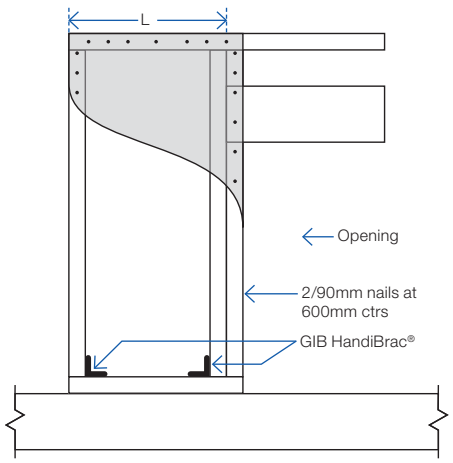

'H' type elements with specific hold downs
'L' indicates the length of the bracing element

FIGURE 36: BL BRACING ELEMENTS (OPTION D)

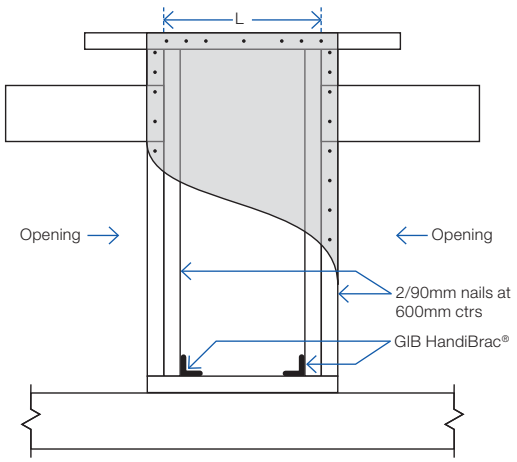

'H' type elements with specific hold downs
'L' indicates the length of the bracing element

KDC - Approved Building Consent Document - BC210441 - Pg 220 of 512 - 30/08/2021 - ComplyNZ

GIB EzyBrace® Systems specification GS1-N

Specification code	Minimum length (m)	Lining requirement
GS1-N	0.4	Any 10mm or 13mm GIB® Standard plasterboard to one side only

WALL FRAMING

Wall framing to comply with;

- NZBC B1 — Structure B1/AS1 Clause 3 Timber (NZS 3604:2011).
- NZBC B2 — Durability B2/AS1 Clause 3.2 Timber (NZS 3602).

Framing dimensions and height as determined by NZS 3604:2011 stud and top plate tables for load bearing and non-bearing walls. The use of kiln dried stress graded timber is recommended.

BOTTOM PLATE FIXING

Timber floor

Pairs of hand driven 100 x 3.75mm nails at 600mm centres; or three power driven 90 x 3.15mm nails at 600mm centres.

Concrete floor

Internal Wall Bracing Lines: In accordance with the requirements of NZS 3604:2011 for internal wall plate fixing or 75 x 3.8mm shot fired fasteners with 16mm discs spaced at 150mm and 300mm from end studs and 600mm centres thereafter.

External Wall Bracing Lines: In accordance with the requirements of NZS 3604:2011 for external wall bottom plate fixing.

WALL LINING

- Any 10mm or 13mm GIB® plasterboard lining.
- Sheets can be fixed vertically or horizontally.
- Sheet joints shall be touch fitted.
- Use full length sheets where possible.

PERMITTED ALTERNATIVES

For permitted GIB® plasterboard alternatives refer to p. 5 in GIB EzyBrace® Systems literature.

FASTENING THE LINING

Fasteners

32mm x 6g GIB® Grabber® High Thread Screws, 32mm x 7g GIB® Grabber® Dual Thread Screws or 30mm GIB® Nails. If using the GIBFix® Angle use only 32mm x 7g GIB® Grabber® Dual Thread Screws.

Fastener centres

50,100,150, 225, 300mm maximum from each corner and 150mm thereafter around the perimeter of the bracing element. For vertically fixed sheets place fasteners at 300mm maximum centres to intermediate sheet joints. For horizontally fixed sheets place single fasteners to the sheet edge where it crosses the stud. Use daubs of GIBFix® adhesive at 300mm maximum centres to intermediate studs. Place fasteners no closer than 12mm from paper bound sheet edges and 18mm from any sheet end or cut edge.

JOINTING

Joint strength is important in delivering bracing system performance. All fastener heads stopped and all sheet joints GIB® Joint Tape reinforced and stopped in accordance with the GIB® Site Guide.

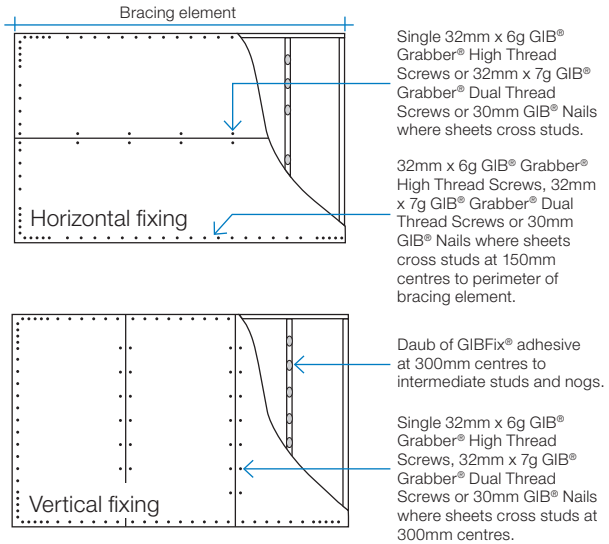

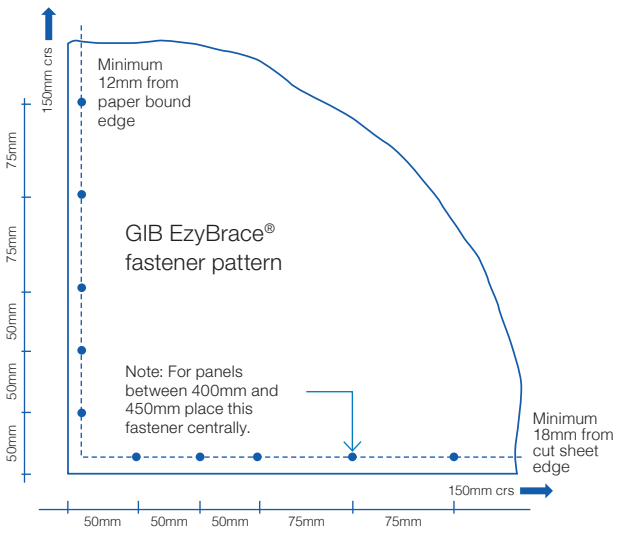

Unless stated all fastener spacings are maximums.

In order for GIB® systems to perform as tested, all components must be installed exactly as prescribed. Substituting components produces an entirely different system and may seriously compromise performance. Follow the specifications. This specification sheet is issued in conjunction with the publication GIB EzyBrace® Systems

KDC - Approved Building Consent Document - BC210441 - Pg 221 of 512 - 30/08/2021 - ComplyNZ

GIB EzyBrace® Systems specification GS2-NOM

Specification code	Minimum length (m)	Lining requirement
GS2-NOM	0.4	Any 10mm or 13mm GIB® Standard plasterboard fixed to each side of the wall framing

WALL FRAMING

Wall framing to comply with;

- NZBC B1 — Structure B1/AS1 Clause 3 Timber (NZS 3604:2011).
- NZBC B2 — Durability B2/AS1 Clause 3.2 Timber (NZS 3602).

Framing dimensions and height as determined by NZS 3604:2011 stud and top plate tables for load bearing and non-bearing walls. The use of kiln dried stress graded timber is recommended.

BOTTOM PLATE FIXING

Timber floor

Pairs of hand driven 100mm x 3.75mm nails at 600mm centres; or three power driven 90mm x 3.15mm nails at 600mm centres.

Concrete floor

Internal Wall Bracing Lines: In accordance with the requirements of NZS 3604:2011 for internal wall plate fixing or 75mm x 3.8mm shot fired fasteners with 16mm discs spaced at 150mm and 300mm from end studs and then 600mm centres thereafter.

WALL LINING

- A layer of 10mm or 13mm GIB® plasterboard to each side of the wall.
- Sheets can be fixed vertically or horizontally.
- Sheet joints shall be touch fitted.
- Use full length sheets where possible.

PERMITTED ALTERNATIVES

For permitted GIB® plasterboard alternatives refer to p. 5 in GIB EzyBrace® Systems literature.

FASTENING THE LINING

Fasteners

32mm x 6g GIB® Grabber® High Thread Screws or 32mm x 7g GIB® Grabber® Dual Thread Screws. If using the GIBFix® Angle use 32mm x 7g GIB® Grabber® Dual Thread Screws.

Fastener centres

50, 300mm from each corner and 300mm maximum thereafter around the perimeter of the bracing element. For horizontally fixed sheets place single fasteners to the sheet edge where it crosses the stud. Use daubs of GIBFix® adhesive at 300mm maximum centres to intermediate studs. Place fasteners no closer than 12mm from paper bound sheet edges and 18mm from any sheet end or cut edge.

JOINTING

Joint strength is important in delivering bracing system performance. All fastener heads stopped and all sheet joints GIB® Joint Tape reinforced and stopped in accordance with the GIB® Site Guide.

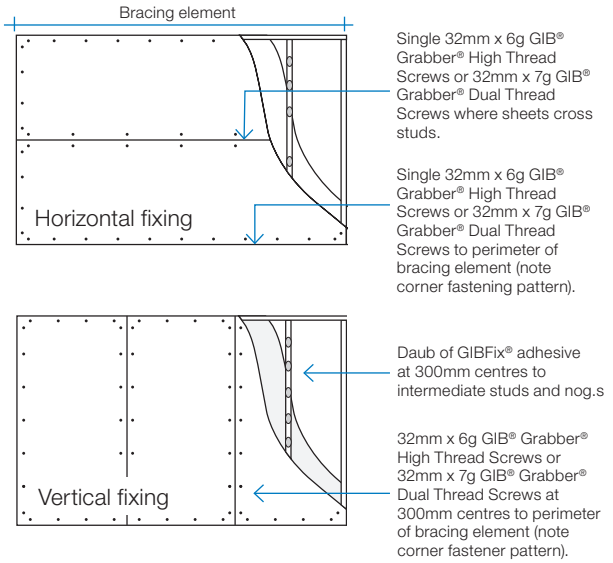

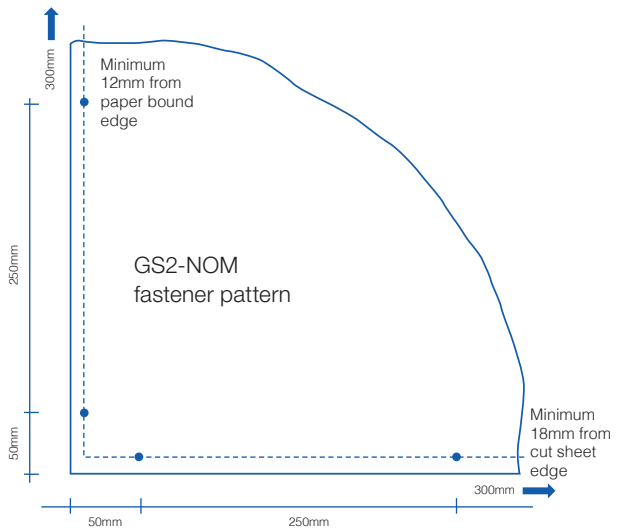

Unless stated all fastener spacings are maximums.

In order for GIB® systems to perform as tested, all components must be installed exactly as prescribed. Substituting components produces an entirely different system and may seriously compromise performance. Follow the specifications. This specification sheet is issued in conjunction with the publication GIB EzyBrace® Systems

KDC - Approved Building Consent Document - BC210441 - Pg 222 of 512 - 30/08/2021 - ComplyNZ

GS2-NOM ADHESIVE FIXING OPTION AT DOOR JAMBS

As an alternative to using screw fixings, a continuous 6-10mm bead of solvent based GIBFix® All-Bond can be applied along the full height studs immediately adjacent to an internal door opening and at the door lintel or head trimmer. The lining is then bedded into the adhesive and installed into the rebated jamb, as shown in figure 38.

This solvent based adhesive option may only be used with GS2-NOM specification and is designed to reduce popping of fasteners around door openings on internal walls.

FIGURE 37: SCREW FIX FOR OPENINGS

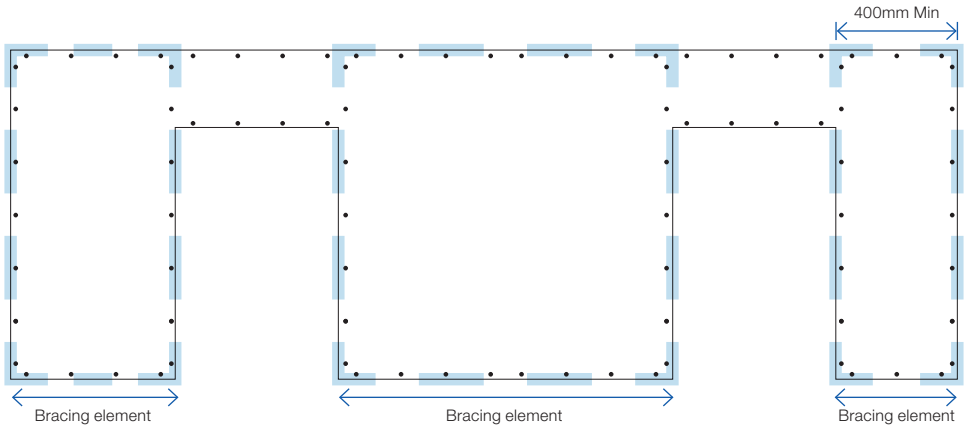

FIGURE 38: SCREW AND ADHESIVE FIX FOR OPENINGS

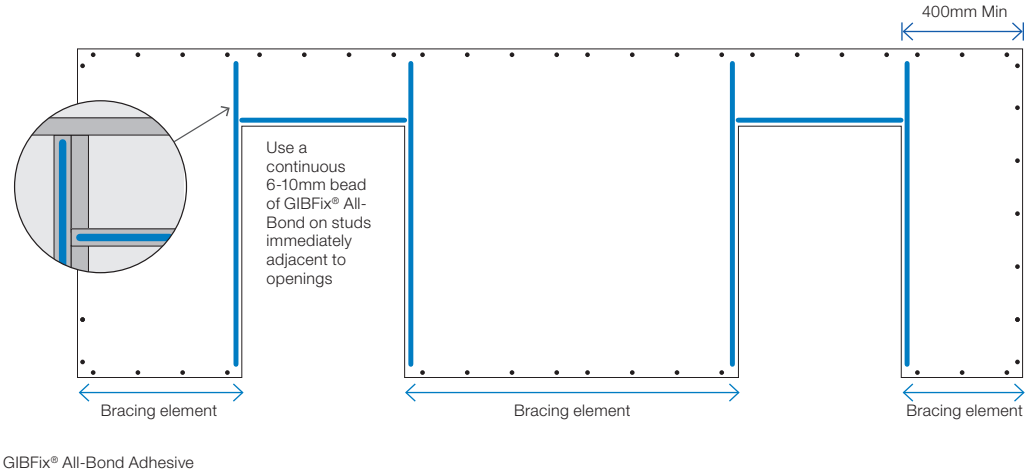

ADHESIVE NOZZLE APERTURE

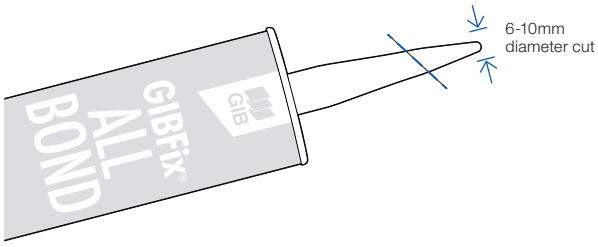

KDC - Approved Building Consent Document - BC210441 - Pg 223 of 512 - 30/08/2021 - ComplyNZ

GIB EzyBrace® Systems specification GS2-N

Specification code	Minimum length (m)	Lining requirement
GS2-N	0.4	Any 10mm or 13mm GIB® Standard plasterboard fixed to each side of the wall framing

WALL FRAMING

Wall framing to comply with;

- NZBC B1 — Structure B1/AS1 Clause 3 Timber (NZS 3604:2011).
- NZBC B2 — Durability B2/AS1 Clause 3.2 Timber (NZS 3602).

Framing dimensions and height as determined by NZS 3604:2011 stud and top plate tables for load bearing and non-bearing walls. The use of kiln dried stress graded timber is recommended.

BOTTOM PLATE FIXING

Timber Floor

Pairs of hand driven 100 x 3.75mm nails at 600mm centres; or three power driven 90 x 3.15mm nails at 600mm centres.

Concrete floor

Internal Wall Bracing Lines: In accordance with the requirements of NZS 3604:2011 for internal wall plate fixing or 75 x 3.8mm shot fired fasteners with 16mm discs spaced at 150mm and 300mm from end studs and then 600mm centres thereafter.

WALL LINING

- A layer of 10mm or 13mm GIB® plasterboard to each side of the wall.
- Sheets can be fixed vertically or horizontally.
- Sheet joints shall be touch fitted.
- Use full length sheets where possible.

PERMITTED ALTERNATIVES

For permitted GIB® plasterboard alternatives refer to p. 5 in GIB EzyBrace® Systems literature.

FASTENING THE LINING

Fasteners

32mm x 6g GIB® Grabber® High Thread Screws,32mm x 7g GIB® Grabber® Dual Thread Screws or 30mm GIB® Nails. If using the GIBFix® Angle use only 32mm x 7g GIB® Grabber® Dual Thread Screws.

Fastener centres

50,100,150, 225, 300mm maximum from each corner and 150mm thereafter around the perimeter of the bracing element. For vertically fixed sheets place fasteners at 300mm maximum centres to intermediate sheet joints. For horizontally fixed sheets place single fasteners to the sheet edge where it crosses the stud. Use daubs of GIBFix® adhesive at 300mm maximum centres to intermediate studs. Place fasteners no closer than 12mm from paper bound sheet edges and 18mm from any sheet end or cut edge.

JOINTING

Joint strength is important in delivering bracing system performance. All fastener heads stopped and all sheet joints GIB® Joint Tape reinforced and stopped in accordance with the GIB® Site Guide.

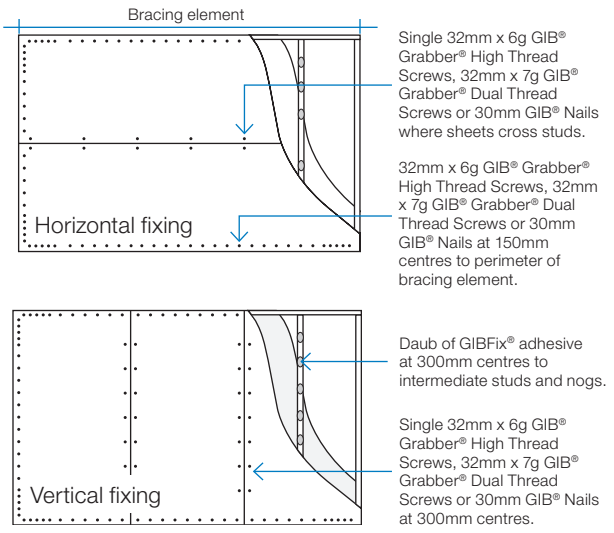

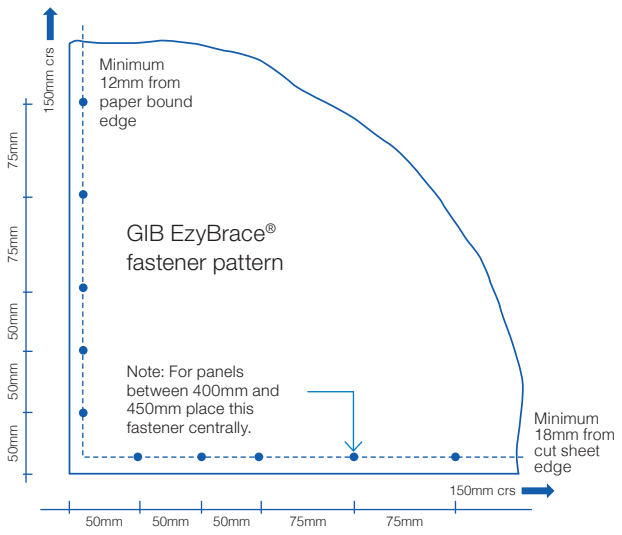

Unless stated all fastener spacings are maximums.

In order for GIB® systems to perform as tested, all components must be installed exactly as prescribed. Substituting components produces an entirely different system and may seriously compromise performance. Follow the specifications. This specification sheet is issued in conjunction with the publication GIB EzyBrace® Systems

KDC - Approved Building Consent Document - BC210441 - Pg 224 of 512 - 30/08/2021 - ComplyNZ

GIB EzyBrace® Systems specification GSP-H

Specification Code	Minimum length (m)	Lining requirement	Other requirements
GSP-H	0.4	Any 10mm or 13mm GIB® plasterboard lining to one side of framing and minimum 7mm structural plywood manufactured to AS/NZ 2269.0 :2012 to the other side	Hold downs

WALL FRAMING

Wall framing to comply with;

- NZBC B1 — Structure B1/AS1 Clause 3 Timber (NZS 3604:2011).
- NZBC B2 — Durability B2/AS1 Clause 3.2 Timber (NZS 3602).

Framing dimensions and height as determined by NZS 3604:2011 stud and top plate tables for load bearing and non-bearing walls. The use of kiln dried stress graded timber is recommended.

BOTTOM PLATE FIXING

Timber floor

Use panel hold downs at each end of the bracing element. The GIB HandiBrac® is recommended. See details in GIB EzyBrace® Systems or GIB® Site Guide.

Pairs of hand driven 100 x 3.75mm nails at 600mm centres; or Three power driven 90 x 3.15mm nails at 600mm centres.

Concrete floor

Use panel hold downs at each end of the bracing element. The GIB HandiBrac® is recommended. See details in GIB EzyBrace® Systems or GIB® Site Guide. Within the length of the bracing element bottom plates are to be fixed in accordance with the requirements of NZS 3604:2011.

WALL LINING

- A layer of 10mm or 13mm GIB® plasterboard to one side of the wall plus minimum 7mm structural plywood manufactured to AS/NZ 2269.0 :2012 to the other side.
- Sheets can be fixed vertically or horizontally, with edges supported.
- Sheet joints shall be touch fitted.
- Use full length sheets where possible.

PERMITTED ALTERNATIVES

For permitted GIB® plasterboard alternatives refer to p. 5 in GIB EzyBrace® Systems literature.

FASTENING THE LINING

Fasteners

32mm x 6g GIB® Grabber® High Thread Screws, 32mm x 7g GIB® Grabber® Dual Thread Screws or 30mm GIB® Nails.

If using the GIBFix® Framing System or if fastening through GIBFix® Angles use only 32mm x 7g GIB® Grabber® Dual Thread Screws. Plywood: 50 x 2.8mm Galv or Stainless steel annular grooved FH nails.

Fastener centres

GIB® plasterboard side: 50,100,150, 225, 300mm maximum from each corner and 150mm thereafter around the perimeter of the bracing element. For vertically fixed sheets place fasteners at 300mm maximum centres to the intermediate sheet joints. For horizontally fixed sheets place single fasteners to the sheet edge where it crosses the stud. Use daubs of GIBFix® adhesive at 300mm maximum centres to intermediate studs. Place fasteners no closer than 12mm from paper bound sheet edges and 18mm from any sheet end or cut edge. Plywood side: 150mm centres to the perimeter of each sheet. GIB® corner fastener pattern does not apply to the plywood side. 300mm centres to intermediate studs.

JOINTING

Joint strength is important in delivering bracing system performance. All fastener heads stopped and all sheet joints GIB® Joint Tape reinforced and stopped in accordance with the GIB® Site Guide.

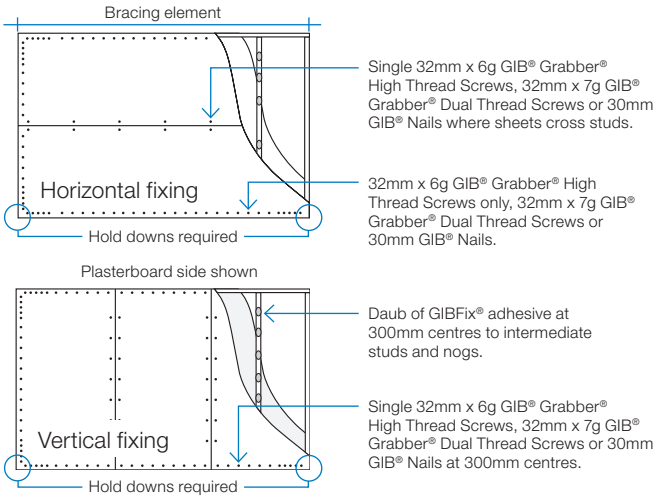

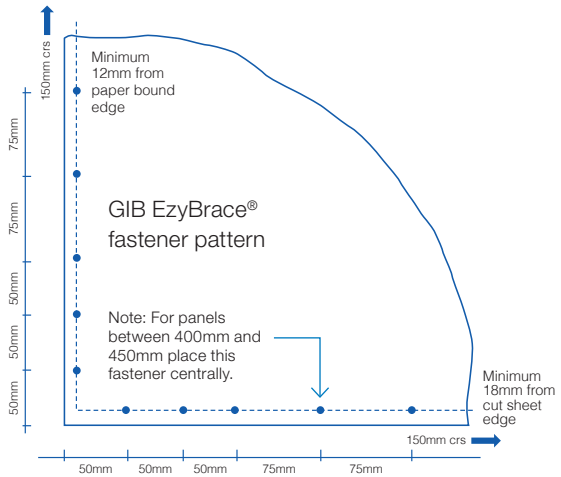

Unless stated all fastener spacings are maximums.

In order for GIB® systems to perform as tested, all components must be installed exactly as prescribed. Substituting components produces an entirely different system and may seriously compromise performance. Follow the specifications. This specification sheet is issued in conjunction with the publication GIB EzyBrace® Systems

KDC - Approved Building Consent Document - BC210441 - Pg 225 of 512 - 30/08/2021 - ComplyNZ

GIB EzyBrace® Systems specification BL1-H

Specification code	Minimum length (m)	Lining requirement	Other requirements
BL1-H	0.4	10mm or 13mm GIB Braceline® to one side only	Hold downs

WALL FRAMING

Wall framing to comply with;

— NZBC B1 — Structure B1/AS1 Clause 3 Timber (NZS 3604:2011).
— NZBC B2 — Durability B2/AS1 Clause 3.2 Timber (NZS 3602).

Framing dimensions and height as determined by NZS 3604:2011 stud and top plate tables for load bearing and non-bearing walls. The use of kiln dried stress graded timber is recommended.

BOTTOM PLATE FIXING

Timber floor

Use panel hold downs at each end of the bracing element. The GIB HandiBrac® is recommended. See details in GIB EzyBrace® Systems or GIB® Site Guide.

Pairs of hand driven 100 x 3.75mm nails at 600mm centres; or Three power driven 90 x 3.15mm nails at 600mm centres.

Concrete floor

Use panel hold downs at each end of the bracing element. The GIB HandiBrac® is recommended. See details in GIB EzyBrace® Systems or GIB® Site Guide. Within the length of the bracing element bottom plates are to be fixed in accordance with the requirements of NZS 3604:2011.

WALL LINING

— A layer of 10mm or 13mm GIB Braceline®
— Sheets can be fixed vertically or horizontally.
— Sheet joints shall be touch fitted.
— Use full length sheets where possible.

PERMITTED ALTERNATIVES

For permitted GIB® plasterboard alternatives refer to p. 5 in GIB EzyBrace® Systems literature.

FASTENING THE LINING

Fasteners

32mm x 6g GIB® Grabber® High Thread Screws or 32mm x 7g GIB® Grabber® Dual Thread Screws. If using the GIBFix® Framing System or if fastening through GIBFix® Angles use only 32mm x 7g GIB® Grabber® Dual Thread Screws.

Fastener centres

50,100,150, 225, 300mm from maximum each corner and 150mm thereafter around the perimeter of the bracing element. For vertically fixed sheets place fasteners at 300mm maximum centres to the sheet joint. For horizontally fixed sheets place single fasteners to the sheet edge where it crosses the stud. Use daubs of GIBFix® adhesive at 300mm maximum centres to intermediate studs. Place fasteners no closer than 12mm from paper bound sheet edges and 18mm from any sheet end or cut edge.

JOINTING

Joint strength is important in delivering bracing system performance. All fastener heads stopped and all sheet joints GIB® Joint Tape reinforced and stopped in accordance with the GIB® Site Guide.

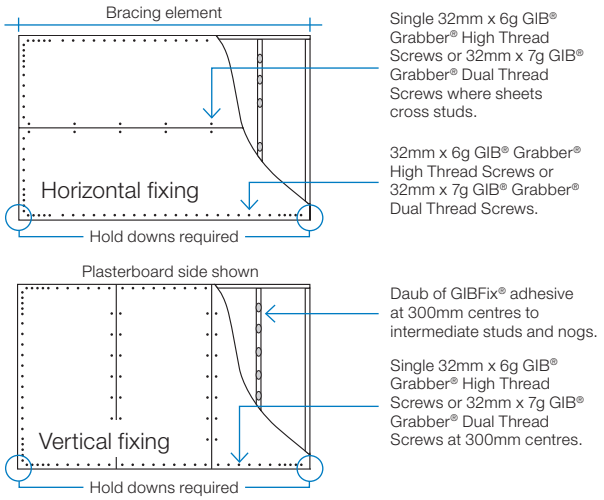

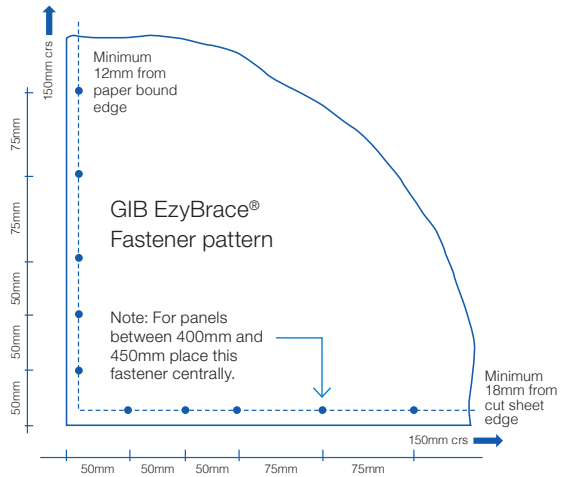

Unless stated all fastener spacings are maximums.

In order for GIB® systems to perform as tested, all components must be installed exactly as prescribed. Substituting components produces an entirely different system and may seriously compromise performance. Follow the specifications. This specification sheet is issued in conjunction with the publication GIB EzyBrace® Systems

KDC - Approved Building Consent Document - BC210441 - Pg 226 of 512 - 30/08/2021 - ComplyNZ

GIB EzyBrace® Systems specification BLG-H

Specification code	Minimum length (m)	Lining requirement	Other requirements
BLG-H	0.4	10mm or 13mm GIB Braceline® to one side of the frame plus any 10mm or 13mm GIB® plasterboard to the other side	Hold downs

WALL FRAMING

Wall framing to comply with;

- NZBC B1 — Structure B1/AS1 Clause 3 Timber (NZS 3604:2011).
- NZBC B2 — Durability B2/AS1 Clause 3.2 Timber (NZS 3602).

Framing dimensions and height as determined by NZS 3604:2011 stud and top plate tables for load bearing and non-bearing walls. The use of kiln dried stress graded timber is recommended.

BOTTOM PLATE FIXING

Timber floor

Use panel hold downs at each end of the bracing element. The GIB HandiBrac® is recommended. See details in GIB EzyBrace® Systems or GIB® Site Guide. Pairs of hand driven 100 x 3.75mm nails at 600mm centres; or Three power driven 90 x 3.15mm nails at 600mm centres.

Concrete floor

Use panel hold downs at each end of the bracing element. The GIB HandiBrac® is recommended. See details in GIB EzyBrace® Systems 2011 or GIB® Site Guide. Within the length of the bracing element bottom plates are to be fixed in accordance with the requirements of NZS 3604:2011.

WALL LINING

- A layer of 10mm or 13mm GIB Braceline® to one side of the wall plus any 10mm or 13mm GIB® plasterboard lining to the other side.
- Sheets can be fixed vertically or horizontally.
- Sheet joints shall be touch fitted.
- Use full length sheets where possible.

PERMITTED ALTERNATIVES

For permitted GIB® plasterboard alternatives refer to p. 5 in GIB EzyBrace® Systems literature.

FASTENING THE LINING

Fasteners

GIB Braceline® side: 32mm x 6g GIB® Grabber® High Thread Screws or 32mm x 7g GIB® Grabber® Dual Thread Screws.Other side: 32mm x 6g GIB® Grabber® High Thread Screws, 30mm GIB Nails or 32mm x 7g GIB® Grabber® Dual Thread Screws.

If using the GIBFix® Framing System or if fastening through GIBFix® Angles use only 32mm x 7g GIB® Grabber® Dual Thread Screws.

Fastener centres

50,100,150, 225, 300mm maximum from each corner and then 150mm thereafter around the perimeter of the bracing element. For vertically fixed sheets place fasteners at 300mm maximum centres to the intermediate sheet joints. For horizontally fixed sheets place single fasteners to the sheet edge where it crosses the stud. Use daubs of GIBFix® adhesive at 300mm maximum centres to intermediate studs. Place fasteners no closer than 12mm from paper bound sheet edges and 18mm from any sheet end or cut edge.

JOINTING

Joint strength is important in delivering bracing system performance. All fastener heads stopped and all sheet joints GIB® Joint Tape reinforced and stopped in accordance with the GIB® Site Guide.

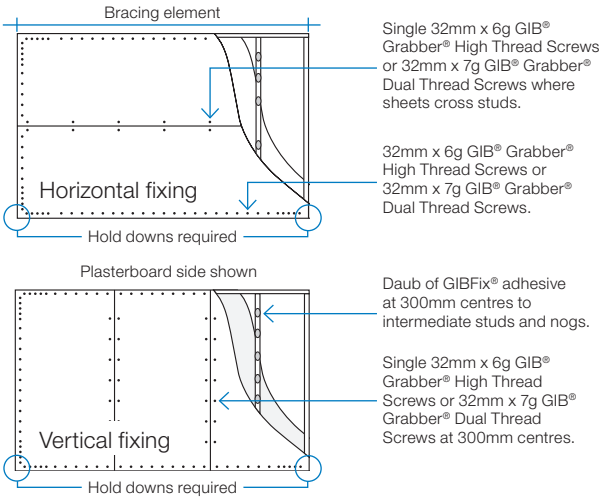

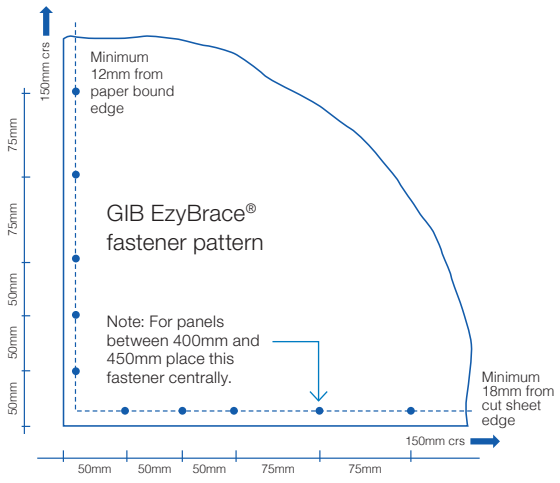

Unless stated all fastener spacings are maximums.

In order for GIB® systems to perform as tested, all components must be installed exactly as prescribed. Substituting components produces an entirely different system and may seriously compromise performance. Follow the specifications. This specification sheet is issued in conjunction with the publication GIB EzyBrace® Systems

KDC - Approved Building Consent Document - BC210441 - Pg 227 of 512 - 30/08/2021 - ComplyNZ

GIB EzyBrace® Systems specification BLP-H

Specification code	Minimum length (m)	Lining requirement	Other requirements
BLP-H	0.4	10mm or 13mm GIB Braceline® to one side of the frame plus minimum 7mm structural plywood manufactured to AS/NZ 2269.0 :2012 to the other side	Hold downs

WALL FRAMING

Wall framing to comply with;

- NZBC B1 — Structure; B1/AS1 Clause 3 Timber (NZS 3604:2011).
- NZBC B2 — Durability B2/AS1 Clause 3.2 Timber (NZS 3602).

Framing dimensions and height as determined by NZS 3604:2011 stud and top plate tables for load bearing and non-bearing walls. The use of kiln dried stress graded timber is recommended.

BOTTOM PLATE FIXING

Timber floor

Use panel hold downs at each end of the bracing element. The GIB® HandiBrac is recommended. See details in GIB EzyBrace® Systems or GIB® Site Guide.

Pairs of hand driven 100 x 3.75mm nails at 600mm centres; or Three power driven 90 x 3.15mm nails at 600mm centres.

Concrete floor

Use panel hold downs at each end of the bracing element. The GIB HandiBrac® is recommended. See details in GIB EzyBrace® Systems or GIB® Site Guide. Within the length of the bracing element bottom plates are to be fixed in accordance with the requirements of AS/NZ 2269/0 :2012.

WALL LINING

- A layer of 10mm or 13mm GIB Braceline® to one side of the wall plus minimum 7mm structural plywood manufactured to AS/NZS 2269.0 :2012 to the other side.
- Sheets can be fixed vertically or horizontally.
- Plywood is to be fixed vertically with edges supported.
- Sheet joints shall be touch fitted.
- Use full length sheets where possible.

PERMITTED ALTERNATIVES

For permitted GIB® plasterboard alternatives refer to p. 5 in GIB EzyBrace® Systems literature.

FASTENING THE LINING

Fasteners

GIB Braceline® side: 32mm x 6g GIB® Grabber® High Thread Screws or 32mm x 7g GIB® Grabber® Dual Thread Screws. Plywood: 50 x 2.8mm Galv or Stainless steel annular grooved FH nails. If using the GIBFix® Framing System or if fastening through GIBFix® Angles use only 32mm x 7g GIB® Grabber® Dual Thread Screws.

Fastener centres

GIB® Plasterboard side: 50,100,150, 225, 300mm from each corner and then 150mm thereafter around the perimeter of the bracing element. For vertically fixed sheets place fasteners at 300mm centres to the intermediate sheet joints. For horizontally fixed sheets place single fasteners to the sheet edge where it crosses the stud. Use daubs of GIBFix® adhesive at 300mm centres to intermediate studs. Place fasteners no closer than 12mm from paper bound sheet edges and 18mm from any sheet end or cut edge. Plywood side: 150mm centres to the perimeter of each sheet. GIB® corner fastener pattern does not apply to the plywood side. 300mm centres to intermediate studs.

JOINTING

Joint strength is important in delivering bracing system performance. All fastener heads stopped and all sheet joints GIB® Joint Tape reinforced and stopped in accordance with the GIB® Site Guide.

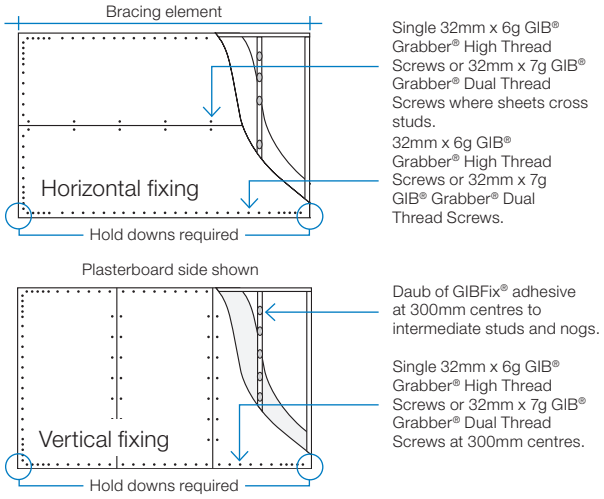

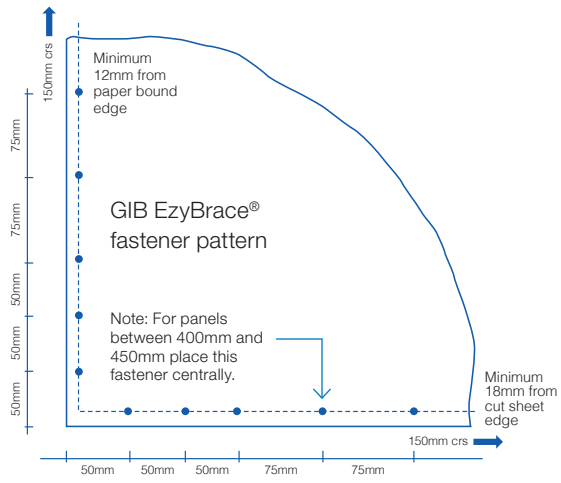

Unless stated all fastener spacings are maximums.

In order for GIB® systems to perform as tested, all components must be installed exactly as prescribed. Substituting components produces an entirely different system and may seriously compromise performance. Follow the specifications. This specification sheet is issued in conjunction with the publication GIB EzyBrace® Systems

Winstone Wallboards is committed to protecting the environment. Environmental matters are integrated into all business activities:

- Our operations strive to exceed all environmental regulatory requirements at all times.
- Protection of the environment is a day to day responsibility that we all must accept.
- We allocate appropriate management time and resources to address relevant environmental issues and continuously improve our activities in that area.
- We will achieve our standards of performance through positive action, employee involvement and constant communication with our neighbours, local authorities and customers.

Minimise on-site waste when designing and/or installing GIB® Systems. For larger projects give consideration to our cut-to-length service to reduce waste. GIB® plasterboard off-cuts, if separated from other waste building materials, can be readily recycled.

For larger projects waste can be diverted to compost manufacturers who grind up the GIB® plasterboard and use it in compost. For smaller projects, the GIB® plasterboard can be ground up and spread around the building site.

GLOBAL GREENTAG^{CERTTM}

The Global GreenTag^{CertTM} certified eco-label acknowledges product as meeting the GreenRate Standard set by Global GreenTag.^{CertTM}

GIB® plasterboard has a Level B green rating.

DECLARE CERTIFICATION

Declare is a database of non-toxic, sustainably sourced building products.

Many GIB® plasterboard products including GIB® Standard, GIB Braceline®, GIB Noiseline® and GIB Aqualine® have achieved Red List Free status in Declare certification.

For more information on Winstone Wallboards sustainability commitments visit gib.co.nz.

COPYRIGHT

Copyright © Winstone Wallboards Ltd 2016. All of the material contained in this brochure, including all text, tables, charts, graphs, drawings, images, diagrams are protected by copyright. These materials may not be reproduced, adapted or transmitted in any form by any process, without the permission of Winstone Wallboards Ltd.

Winstone Wallboards asserts its moral rights and reserves all other intellectual property rights in the materials contained in this brochure and related to GIBFix® Framing System and GIB EzyBrace® Systems.

TRADEMARKS

The names GIB®, GIB Fyreline®, GIB Ultraline®, GIB Braceline®, GIB Toughline®, GIB Noiseline®, GIB Aqualine®, GIB Nail®, GIB Tradeset®, GIB Plus 4®, GIB-Cove®, GIB Lite Blue®, GIBFix®, the colour mauve for GIB Toughline®, GIB HandiBrac®, GIB EzyBrace®, the colour blue for GIB Braceline®, the colour pink for GIB Fyreline®, the colour green for GIB Aqualine®, and the shield device are registered trademarks of Fletcher Building Holdings Limited.

PATENTS

GIBFix® Framing System and GIB EzyBrace® Systems, including componentry and design method, have patents pending (NZ Patent Number 596691, NZ Patent 709159 pending) and design and other IP rights.

KDC - Approved Building Consent Document - BC210441 - Pg 228 of 512 - 30/08/2021 - ComplyNZ

KDC - Approved Building Consent Document - BC210441 - Pg 229 of 512 - 30/08/2021 - ComplyNZ

FOR MORE INFORMATION VISIT

gib.co.nz

OR CALL THE GIB® HELPLINE

0800 100 442

GIB Standard Plasterboard

Product Technical Statement: 101955

miproducts
THE NATIONAL PRODUCT DATABASE

KDC - Approved Building Consent Document - BC210441 - Pg 230 of 512 - 30/08/2021 - ComplyNZ

GIB® Standard plasterboard is an economical lining material available in 10mm and 13mm thicknesses.

View miproducts listing

☒ Appraisal Company — GIB confirms that this minimum level of assurance has been met or exceeded by the following:
GIB
Technical Data

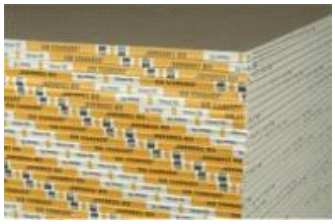

masterspec partner

Technical Statement

Product Description

GIB® Standard plasterboard is an economical lining material available in 10mm and 13mm thicknesses.

13mm GIB® Standard plasterboard is recommended for use on ceilings as it is stronger and more rigid than 10mm GIB® Standard plasterboard.

Sheets have a width of 1200mm and are available in 2400, 2700, 3000, 3300, 3600, 4200, 4800 and 6000mm lengths - see the selector chart for more information.

GIB Standard plasterboard is available with both edges tapered to allow for flush finishing, or with 1 tapered, 1 square edge to provide a flat surface for finishing trims when fixing horizontally

New Zealand Building Code (NZBC)

The product will, if employed in accordance with the supplier's installation and maintenance requirements, assist with meeting the following provisions of the building code:

Notes

Evidence

The product meets the requirements set out in the following documents, or relevant parts of cited standards within the documents:

Supporting Evidence

The product has and can make available the following additional evidence to support the above statements:

CodeMark

BRANZ Appraisal

Use in Service History

Product Criteria

Installation requirements

GIB® Standard must be installed in accordance with the manufacturer's Technical Literature.

Warrantees

Company Product Information

Relationships

GIB
Technical Data

Environmental Choice New Zealand

Company Contact Details

GIB

Company:	Winstone Wallboards Ltd
Physical Address:	37 Felix Street Penrose AUCKLAND
Postal Address:	PO Box 12256 Penrose AUCKLAND
Telephone:	64 09 6330100
Fax:	64 09 6330101
Email:	info@gib.co.nz
Website:	www.gib.co.nz

✔ Date last validated: **12 July 2017**

Date last updated: **12 July 2017**

Disclaimer: The Product Technical Statement (PTS) template is copyright to Construction Information Limited. However the content of this PTS is the responsibility of the product manufacturer/supplier. Refer to the miproducts Terms and Conditions

KDC - Approved Building Consent Document - BC210441 - Pg 231 of 512 - 30/08/2021 - ComplyNZ

GIB® Goldline™ Platinum

Tape-On Trims



- Made with a patented, high quality paper laminated to galvanised steel forms.
- Simply installed by embedding directly into the joint compound
- No need for fasteners, so there's no chance of fastener popping
- Significantly reduces the risk of cracking because the trim is not directly fastened to the frame

KDC - Approved Building Consent Document - BC210441 - Pg 232 of 512 - 30/08/2021 - ComplyNZ

Introduction

GIB® Goldline™ Platinum paper-faced metal trims are made with a patented, high quality paper laminated to galvanised steel forms. The metal provides maximum strength and protection for the corner, while the paper provides reinforcement to reduce cracking caused by the movement or shrinkage of framing members. The result is a clean, precise corner that is long lasting, provides superior resistance to edge cracking, rust resistance and is not subject to fastener popping.

Features

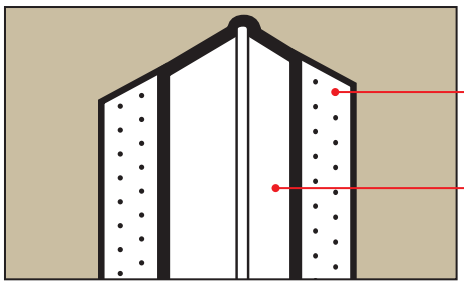

Strong paper tape provides reinforcement to significantly reduce the risk of cracking caused by movement or shrinkage of framing.

Galvanised steel provides strength and protection for corners and increased rust resistance.

- GIB® Goldline™ Platinum's paper is resistant to scuffing, fluffing and damages caused by sanding and plasterboard knives and trowels.
- The paper flange bonds well to the joint compound to reduce the risk of cracking caused by any minor movement and shrinkage of framing members.
- GIB® Goldline™ Platinum Tape-On Trims are easily installed without the need for fasteners using GIB® joint compound so nail popping is not a problem.
- Paper-face provides superb resistance to chipping due to excellent compound and paint adhesion.
- Galvanized coated steel provides exceptional corrosion resistance.
- Easy to adjust during application resulting in a clean, precise corner.
- Available in a wide variety of widths and profiles to suit any plasterboard application.
- Meets or exceeds specifications laid out in ASTM C1047.

Applications

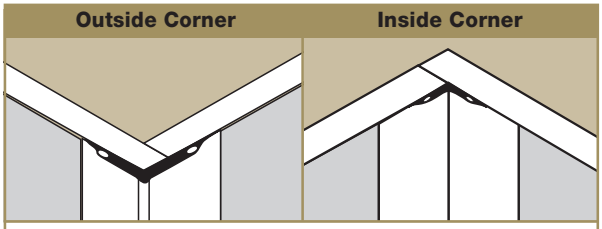

Standard Outside and Inside Corners for most square corner applications

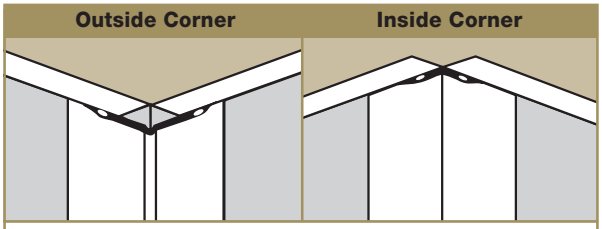

Offset Outside and Inside Trims designed for 135˚ corners

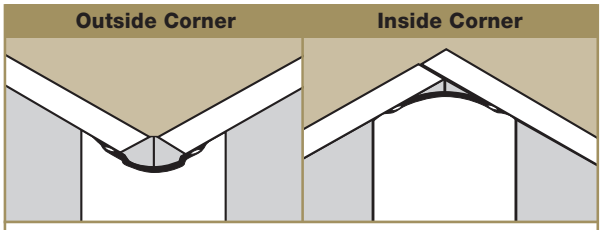

Bullnose Corners add contemporary styling to plasterboard partitions

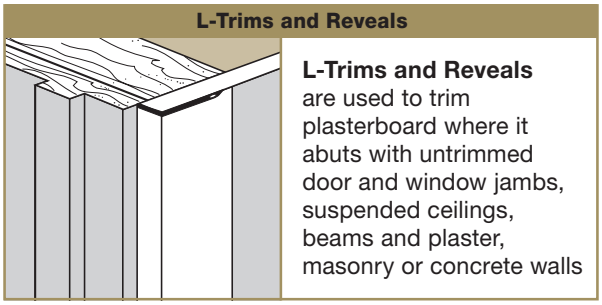

L-Trims and Reveals are used to trim plasterboard where it abuts with untrimmed door and window jambs, suspended ceilings, beams and plaster, masonry or concrete walls

KDC - Approved Building Consent Document - BC210441 - Pg 233 of 512 - 30/08/2021 - ComplyNZ

Square Tape-On Trims



GIB® Goldline™ Platinum Square Tape-On Trims create clean lines and precise square corners. The traditional styling of these corners provide sharp lines which give architectural details such as paint transitions and step bulkheads a more dramatic look.

GIB® Goldline™ Platinum Square Tape-On Trims offer a wide selection of profiles for use on 90˚ outside/inside and 135˚ off angle outside/inside corners to accommodate any thickness of plasterboard. GIB® Goldline™ Platinum Square Tape-On Trims can be quickly and easily installed using GIB® joint compound, so there is no chance of fastener popping.

Square Tape-On Outside Corners

TYPE		DIMENSIONS				PROFILE	AVAILABILITY
		A	B	C	D		
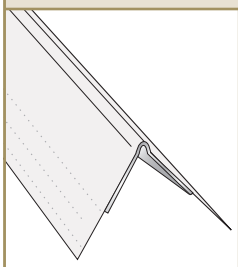	G1-W STANDARD	22mm	13mm	19mm	22mm	90˚  STANDARD	2.4m, 2.7m, 3.0m
	G1-U WIDE EQUAL LEG	19mm	19mm	19mm	19mm		
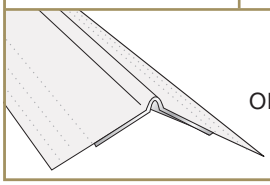	G1-O OFF ANGLE	16mm	19mm	13mm	16mm	135˚ 	2.4m, 3.0m

Square Tape-On Inside Corners

TYPE		DIMENSIONS				PROFILE	AVAILABILITY
		A	B	C	D		
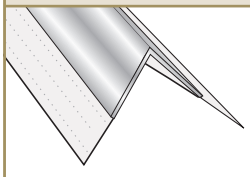	G2 STANDARD	16mm	10mm	10mm	16mm	90˚ 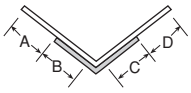 STANDARD	2.4m, 2.7m, 3.0m
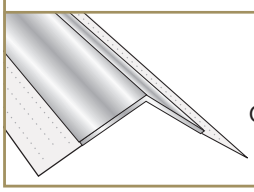	G2-O OFF ANGLE	16mm	19mm	19mm	16mm	135˚ 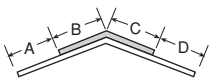 OFF ANGLE	2.4m, 3.0m

Bullnose Tape-On Trims



GIB® Goldline™ Platinum Bullnose Tape-On Trims create a smooth rounded corner giving a sense of openness and contemporary style to any room. The bullnose profile also assists with safety around the home. Any knocks or impact to the rounded corners are less likely to cause injury and/or chip the corner.

GIB® Goldline™ Platinum Bullnose Tape-On Trims are suitable for 10mm, 13mm and 16mm plasterboard and are quickly and easily installed using GIB® joint compound. The result is a strong corner that is not subject to fastener popping. Available in outside/inside 90˚ and outside 135˚ off angle corners.

Bullnose Tape-On Outside Corner

TYPE	DIMENSIONS			PROFILE	AVAILABILITY
	A	RADIUS	B		
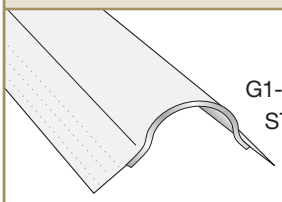 G1-B OUTSIDE STANDARD	22mm	19mm	22mm	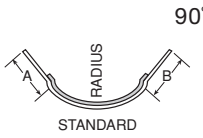	2.4m, 2.7m, 3.0m
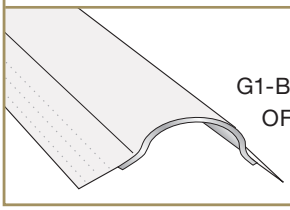 G1-BO OUTSIDE OFF ANGLE	25mm	19mm	25mm	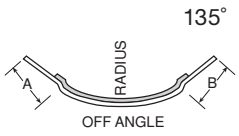	3.0m

Bullnose Tape-On Inside Corner

TYPE	DIMENSIONS			PROFILE	AVAILABILITY
	A	RADIUS	B		
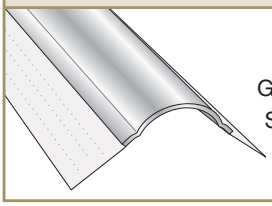 G2-B INSIDE STANDARD	22mm	19mm	22mm		2.4m, 3.0m

KDC - Approved Building Consent Document - BC210441 - Pg 234 of 512 - 30/08/2021 - ComplyNZ

KDC - Approved Building Consent Document - BC210441 - Pg 235 of 512 - 30/08/2021 - ComplyNZ

Tape-On L-Trims & Reveals



GIB® Goldline™ Platinum Tape-On L-Trims and Reveals are used to finish rough edges of plasterboard where it abuts other building components such as suspended ceilings, beams, masonry or concrete walls, untrimmed door and window jambs and bi-fold door openings. All of these trims can be quickly and easily installed using GIB® joint compound, leaving a strong finish that is not subject to fastener popping. Available in a wide variety of sizes, suitable for most applications.

GIB® Goldline™ Platinum Tape-On L-Trims and Reveals can also be used together to form control joints in large areas, providing an attractive architectural finish.

Tape-On L-Trims

TYPE		DIMENSIONS			PROFILE	AVAILABILITY
		A	B	C		
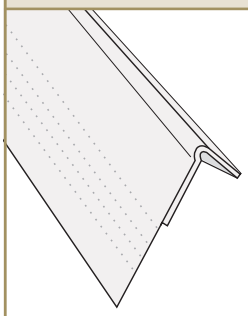	G4 9.5mm Use with 10mm GIB® plasterboard	12mm	27.5mm	30mm	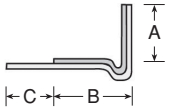	2.4m, 3.0m
	G4 12.5mm Use with 13mm GIB® plasterboard	15mm	27.5mm	30mm		

Tape-On Reveals

TYPE		DIMENSIONS				PROFILE	AVAILABILITY
		A	B	C	D		
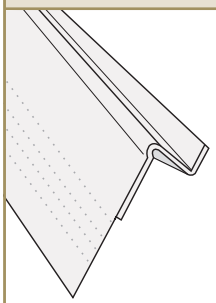	GR 13mm x 13mm Use with 10mm GIB® plasterboard	13mm	13mm	27mm	30mm	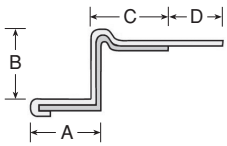	3.0m
	GR 13mm x 16mm Use with 13mm GIB® plasterboard	13mm	16mm	25mm	30mm		

Installation

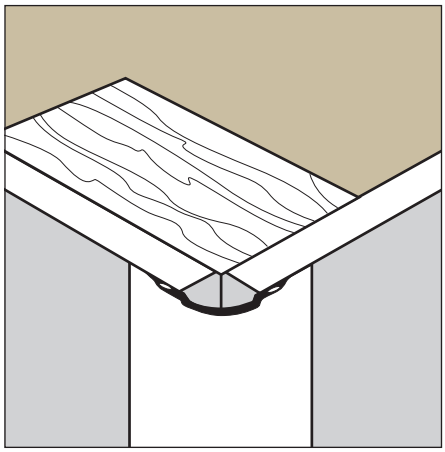

GIB® Goldline™ Platinum Tape-On Trims are simply installed by embedding directly into the joint compound. There's no need for fasteners, so there's no chance of fastener popping. Because the trim is not directly fastened to the frame, the risk of cracking is significantly reduced.

A slightly thinner mix of compound is recommended for the installation of GIB® Goldline™ Platinum Tape-On Trims because it provides better paper adhesion. This means adding a little more water when mixing up the compound. Setting and premix compounds designed for embedding must be used. ie; do not use finishing compounds for the first two coats.

When you are installing external Bullnose Corners, check that the plasterboard edges do not extend past the corner of the framing substrate on either side (see figure). If the plasterboard edges do protrude, simply trim them back prior to commencing installation.

External

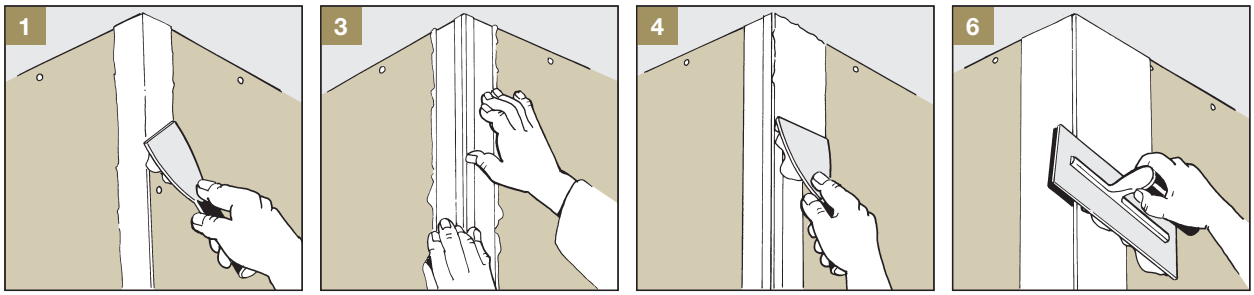

1. Apply a 75mm wide band of GIB® joint compound to each side of the GIB® plasterboard corner.
2. Cut trim to required length and position over the joint compound. Allow 10mm at the bottom for expansion and contraction of framing members, and mitre any corners which will be abbuting other trims at corners.
3. Press the trim firmly into the compound, evenly along its full length, thus embedding the paper tape and forcing out excess compound. The installation of the trim may be performed with the aid of a corner roller.
4. Using a 100mm broad-knife, wipe off surplus compound and eliminate all air bubbles under the paper. Be careful not to remove all compound.
5. Flush the joint with a 150mm broad-knife or trowel using additional compound. Remove any excess jointing compound on the nose of the trim by wiping with a damp sponge.
6. Allow to harden and dry, then apply a light top coat of GIB® finishing compound. This is done using a large (250-300mm wide) finishing knife or trowel, and applying compound in a band about 200mm wide. Level the compound by drawing the knife along the trim with one edge of the blade riding on the nose of the trim and the other on the surface of the GIB® plasterboard.
7. Repeat for the other side of the trim. Allow to dry.
8. Apply a second top coat of GIB® finishing compound once previous coat is dry. Feather the edges of each coat about 50mm beyond the preceding coat, and again wiping the trim with a damp sponge. When the top coat is completely dry, lightly sand taking care not to scuff the face paper of the GIB® plasterboard.

Internal

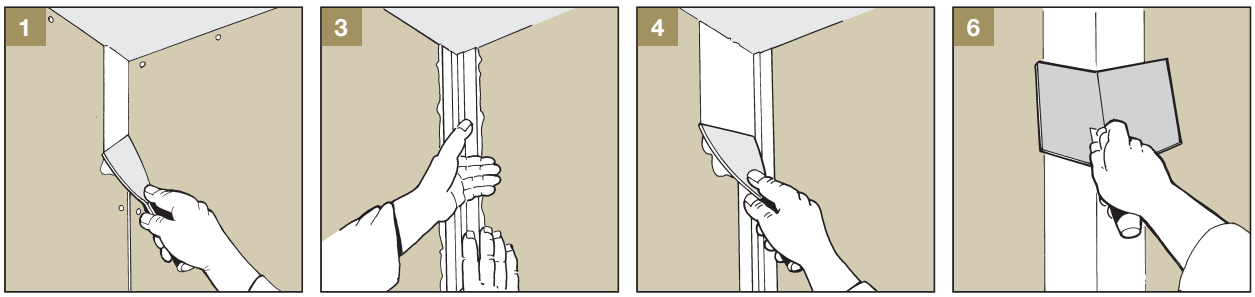

Inside corners are installed similarly to outside corners except usually only one top coat of GIB® finishing compound is required. A corner roller may be used to apply and smooth the compound if desired.

KDC - Approved Building Consent Document - BC210441 - Pg 236 of 512 - 30/08/2021 - ComplyNZ

KDC - Approved Building Consent Document - BC210441 - Pg 237 of 512 - 30/08/2021 - ComplyNZ

GIB® Goldline™ Platinum products

Manufactured by Bailey Metal Products Limited.

Distributed nationwide by authorised GIB® distributors.

Winstone Wallboards Ltd accepts no liability if GIB® Goldline™ Platinum tape-on trims are not installed in strict accordance with the instructions contained in this publication.

Use only the current specification

This publication may be superseded by a new publication. Winstone Wallboards accepts no liability for reliance upon publications that have been superseded. You should check the current index of publications on www.gib.co.nz before using this publication. If you are unsure whether this is the current publication, simply call the GIB® Helpline on 0800 100 442.

Trademarks

The names GIB® and GIB Tradeset® are registered marks of Fletcher Building Holdings Limited.
The name Goldline™ is a trademark of Bailey Metal Products Limited.

Copyright © Winstone Wallboards Ltd 2004

KDC - Approved Building Consent Document - BC210441 - Pg 238 of 512 - 30/08/2021 - ComplyNZ

Winstone Wallboards Limited

37 Felix Street, P O Box 12256
Penrose, Auckland, New Zealand
Phone 64-9-633 0100, Facsimile 64-9-633 0101
Internet website: http://www.gib.co.nz
E-mail: info@gib.co.nz

GIB® Helpline: Telephone 0800 100 442 Facsimile 0800 229 222

Platinum is a series of Goldline™

DRYWALL TRIMS

Patent New Zealand 302378

Printed January 2006 Ref: CBI 5113

KDC - Approved Building Consent Document - BC210441 - Pg 239 of 512 - 30/08/2021 - ComplyNZ

GIB® Product and System Warranty

WE ARE 100% BEHIND OUR PRODUCTS AND SYSTEMS

If any of our products or systems* fail to perform as claimed or an issue associated with any GIB® product or system does occur, Winstone Wallboards will work with the relevant parties to help resolve the issue.

YOU'RE PROTECTED WITH GIB® PLASTERBOARD SYSTEMS

BRANZ Appraised
Appraisal No. 427 [2007], 940 [2016], 928 [2016], 394 [2017], 289 [2018], 1048 [2019]

For over 90 years, building professionals have relied on GIB® plasterboard systems. Locally made for local conditions, they meet or exceed the New Zealand Building Code, are BRANZ appraised and are backed by full technical information and support to give complete confidence in using GIB® Plasterboard Systems*.

*When installed and maintained strictly in accordance with the relevant Winstone Wallboards literature current at the time of installation and under normal conditions of dry internal use, unless otherwise permitted in GIB® literature.

Winstone Wallboards is committed through its heavy investment in quality management and technical support to ensure that GIB® products and systems perform as claimed. Comprehensive statements of 'fitness for purpose', functional performance and code compliance (including durability) are contained in GIB® literature and in the relevant BRANZ Appraisal.

SYSTEM AND PRODUCT COMPONENTS

A system is a group of related product components that interact to perform a task. Ensure the full GIB® building system, including the appropriate GIB® branded products, are specified and installed. This will ensure performance is not compromised and that any failure that is attributable to GIB® products and/or systems will be supported. Winstone Wallboards is unable to support system performance where substitute products are used as these have not been tested by us as part of our systems and we cannot be responsible for the ongoing quality and performance of these products.

PRODUCT AND SYSTEM WARRANTY

The Winstone Wallboards warranty covers GIB® products and/or systems for a minimum of 10 years from the date of purchase. Individual GIB® products are always covered by the GIB® product warranty even if these are not used as part of a full GIB® system. Winstone Wallboards warrants that GIB® products will be free from defects caused by factory workmanship or materials and, subject to compliance with the conditions attached, that the product or system will perform to the extent set out in relevant Winstone Wallboards published literature current at the time of installation. Nothing in this document shall exclude or modify any legal rights a customer may have under the Consumer Guarantees Act or otherwise which cannot be excluded or modified at law. This Product and System Warranty is transferable to subsequent owners of the building.

NZ BUILDING CODE CLAUSE B2 - DURABILITY

The New Zealand Building Code sets the required durability standard for specific elements of building work. Clause B2 Durability aims to ensure that building elements and buildings are durable enough so all other objectives of the Building Code are satisfied throughout the life of the building, without the need for reconstruction or major renovation.

GIB® SYSTEMS DURABILITY

The following systems have, unless stated otherwise in the technical literature, a serviceability life in excess of that stated and satisfy the requirements of NZBC Clause B2 Durability.

15 YEARS

- GIB Aqualine® Wet Area Systems
- GIB Weatherline® Rigid Air Barrier Systems**

** 50 years where the cladding durability requirement is 50 years.

50 YEARS

- GIB® Fire Rated Systems
- GIB EzyBrace® Systems
- GIB X-Block® Systems
- GIB Noise Control® Systems

© COPYRIGHT WINSTONE WALLBOARDS LTD 2019

KDC - Approved Building Consent Document - BC210441 - Pg 240 of 512 - 30/08/2021 - ComplyNZ

CONDITIONS OF WARRANTY:

This warranty is subject to the following conditions.

Nothing in these conditions excludes or modifies any legal rights a customer may have under the Consumer Guarantees Act or otherwise which cannot be excluded or modified at law:

(a) Receipt of your written claim as soon as practicable but in any event within 30 days after the defect would have become reasonably apparent or, if the defect was reasonably apparent prior to installation, then the claim must be made prior to installation. We may also request written proof of purchase as a condition to considering your claim;

(b) The project must be designed and constructed in strict compliance with all relevant provisions of the current New Zealand Building Code, and in compliance with other regulations and standards that apply to the project;

(c) This warranty only applies to the initial application of the product and/or system where used and maintained in accordance with the relevant Winstone Wallboards product and/or system literature (including GIB® Site Guide instructions, GIB® Systems details and GIB® Plasterboard Lining Systems Care and Maintenance document), other manufacturers' instructions (where applicable if the GIB® products and/or systems are attached to, or dependent on, other manufacturers' products) and good trade practices current at the time of installation, under normal conditions of dry internal use (unless otherwise permitted in GIB® literature), and does not apply to reuse of any product after initial installation;

(d) If a claim under this warranty is covered, we will work with you to find a solution, which might involve product replacement and assistance with replacement work. Any recoating of GIB® products may result in slight colour differences between the original and replacement GIB® products. Depending on the situation, notwithstanding the foregoing, Winstone Wallboards will, at its option, (1) supply replacement product, (2) rectify the affected product or (3) pay for the cost of the replacement of the affected product.

Winstone Wallboards will not be liable for any losses or damages arising as a result of the breach of warranty or the defective product or systems, other than as set out in this paragraph (d);

(e) This warranty does not apply to, and Winstone Wallboards will not be liable for, any claims, damages or defects arising from or in any way attributable to events outside of Winstone Wallboards' control including, but not limited to, poor workmanship or poor design/detailing, settlement or structural movement, failure in and/or movement of materials to which the product is attached or dependent on, performance of paint/coatings applied to the product, normal wear and tear, organisms or growths on or within the product, or any acts of God;

(f) GIB® Systems have been tested and approved to work together as a full building system as set out in GIB® literature and are supported as outlined in the GIB® Product and System Warranty. For any guidance, recommendation, review, information, or assistance ("Guidance") we provide that may fall outside of GIB® Systems and Product literature, we endeavour to provide helpful Guidance based on the information provided to us at the time on an all care, no liability basis. It remains the full responsibility of the receiver of the Guidance to ensure the adequacy and appropriateness of any course of action taken on the project and application it is being used in;

(g) To the extent permitted by law, all warranties, conditions, liabilities and obligations other than those specified in this warranty are excluded.

Before using this publication check whether it is the current publication by calling the GIB® Helpline weekdays on 0800 100 442 or visit gib.co.nz

Winstone Wallboards Limited
37 Felix Street, Penrose 1061
PO Box 12256, Penrose 1642
Auckland, New Zealand
Phone: +64 9 633 0100
Fax: +64 9 633 0101
Website: www.gib.co.nz
Email: info@gib.co.nz
GIB® Helpline: 0800 100 442
Fax: 0800 229 222

Note: To obtain copies of Winstone Wallboards Ltd literature or BRANZ Appraisals, please contact the GIB® Technical Helpline 0800 100 442 or download from gib.co.nz.

Related BRANZ Appraisals can also be downloaded from www.branz.co.nz/appraisals.

© COPYRIGHT WINSTONE WALLBOARDS LTD 2019

CBI 5113

AUG 2012

GIB® RONDO® METAL BATTEN SYSTEMS

SYSTEM AND INSTALLATION MANUAL

KDC - Approved Building Consent Document - BC210441 - Pg 241 of 512 - 30/08/2021 - ComplyNZ



GIB®

KDC - Approved Building Consent Document - BC210441 - Pg 242 of 512 - 30/08/2021 - ComplyNZ

GIB® Rondo® Metal Batten Systems

Specification and installation guide

- Suitable for Residential and some commercial applications
- GIB® Rondo® metal battens are the recommended system for use in ceilings in conjunction with 13mm GIB® plasterboard
- Easy to install; achieve a flat and true ceiling
- A stable substrate that reduces the risk of costly call backs

GIB® Rondo® Metal batten systems

Winstone Wallboards accepts no liability if the system is not installed in strict accordance with the instructions contained in this publication.

Use only the current specification

This publication may be superseded by a new publication. Winstone Wallboards accepts no responsibility for reliance on superseded publications. Call 0800 100 442 or visit www.gib.co.nz to confirm the currency of the publication.

Beware of substitution

The performance of GIB® Rondo® Metal batten systems is very sensitive to design detailing and specification. It is important that only GIB® Rondo® branded products are used in the systems contained in this publication. No responsibility will be accepted for alternative manufacturers product.

Customised design solutions

The systems detailed in this publication should cover most commonly encountered situation. For projects where specific performance is required please contact our technical support team on 0800 100 442.

KDC - Approved Building Consent Document - BC210441 - Pg 243 of 512 - 30/08/2021 - ComplyNZ

CONTENTS

AUGUST 2012

Introduction **3**
Why Metal? 3

GIB® Rondo® 310 Ceiling Batten System **4-5**
GIB® Rondo® 310 Ceiling Batten System 4-5
GIB® Rondo® 310 Span Tables 5

GIB® Rondo® 308 Ceiling Batten System **6-7**
GIB® Rondo® 308 Ceiling Batten System 6-7
GIB® Rondo® 308 Span Tables 7

GIB® Rondo® Components **8-9**
GIB® Rondo® Ceiling Diaphragms 8
GIB® Rondo® Wall Strapping Systems 8
GIB® Rondo® and Noise Control 9

Suspended Ceiling Systems **10-11**

Notes **12**

RDC Approved Building Consent Document - BC210441 - Pg 244 of 512 - 30/08/2021 - ComplyNZ

INTRODUCTION

AUGUST 2012

KDC - Approved Building Consent Document - BC210441 - Pg 245 of 512 - 30/08/2021 - ComplyNZ

WHY METAL?

A large proportion of ceiling defects such as peaking or cracked joints and popped fasteners can be attributed to movement in the substrate. Timber ceiling substrates are more prone to temperature or moisture induced movement and shrinkage. These issues tend to impact on the surface of the plasterboard and can result in call-backs. Metal ceiling batten systems provide a stable substrate for plasterboard ceiling linings. Regular users of metal batten systems consistently have fewer call-backs for movement related ceiling defects such as peaking or cracked joints and popped fasteners.
Once builders change to GIB® Rondo® metal battens they appreciate the simple installation methodology and enjoy reduced callbacks. Very few, if any, revert back to using timber.

Benefits of steel battens include;

- Consistent performance
  - Less influence from moisture or environmental factors than timber. Unlike timber battens which can vary in grade, species with temperature and humidity, the performance of GIB® Rondo® metal battens is consistent throughout New Zealand
- Lighter weight
  - Lower transport costs and easier to handle on site
- Require less storage space
  - Storage space is often at a premium on building sites and a house-lot of GIB® Rondo® componentry will occupy substantially less space on site than timber battens
- Easy to achieve a flat, stable substrate
  - This results in a trouble free ceiling and reduces the risk of costly call-backs

Benefits of GIB® Rondo® metal batten systems

- Versatility
  - The extensive componentry range provides solutions to a multitude of situations
- Technical back up
  - Our well established and highly rated technical team are available to quickly and efficiently handle any enquiries, call us on 0800 100 442
- Flexibility
  - GIB® Rondo® metal batten systems can be used on residential and some commercial ceilings. Components are also available for use in wall strapping situations and have been tested and approved for use in GIB® noise control systems

There are two systems to select from;

GIB® Rondo® 310 metal batten system – (35mm battens)
The GIB® Rondo® 310 metal batten system comprises a 35mm deep batten. The recommended method of fixing is to use clips as illustrated below.
This provides a flat substrate for the plasterboard ceiling as it is able to compensate for any deviations in the framing.
If the substrate is consistently flat the battens can be attached directly to the underside of the framing.

GIB® Rondo® 308 metal batten system – (16mm battens)
The GIB® Rondo® 308 ceiling batten is a light weight system based on a 16mm deep batten fixed to a clip attached to the ceiling framing as shown.

310 METAL BATTEN		308 METAL BATTEN
 Batten on clips	 Direct fix	 Batten on clips

IMPORTANT NOTE:
Manufactured from 0.55BMT steel with a Z275 coating exceeding the NZBC durability requirements for interior use

GIB® RONDO® 310 METAL BATTEN SYSTEM

AUGUST 2012

GIB® RONDO® 310 CEILING BATTEN SYSTEM

The GIB® Rondo® 310 system forms a strong, stable and flat substrate for ceilings in residential and commercial applications. The 35mm dimension allows it to be directly substituted into ceilings where 35mm timber battens would traditionally have been used. Consult an electrical contractor for any earthing requirements that may need to be incorporated.
There are two methods of fixing GIB® Rondo® 310 metal battens.

Recommended method
Clipped using either;
- 311 clip for a drop of 0-30mm
- 313 clip where a larger drop is required between the bottom of the truss chord, joist or rafter and the back of the ceiling batten a drop of up to 130 mm can be achieved in order to accommodate services or variations in framing heights
- GIB Quiet Clip® for use in GIB® Noise control systems

Alternative method
- Directly by fastening with pairs of min GIB Grabber® 32mm x 8g wafer head screws through the flange (consult span tables pg 5)
- Alternatively pairs of min 45mm x 2.8mm FH nails can be used
- For fixing to steel framing a drill tip screw is recommended

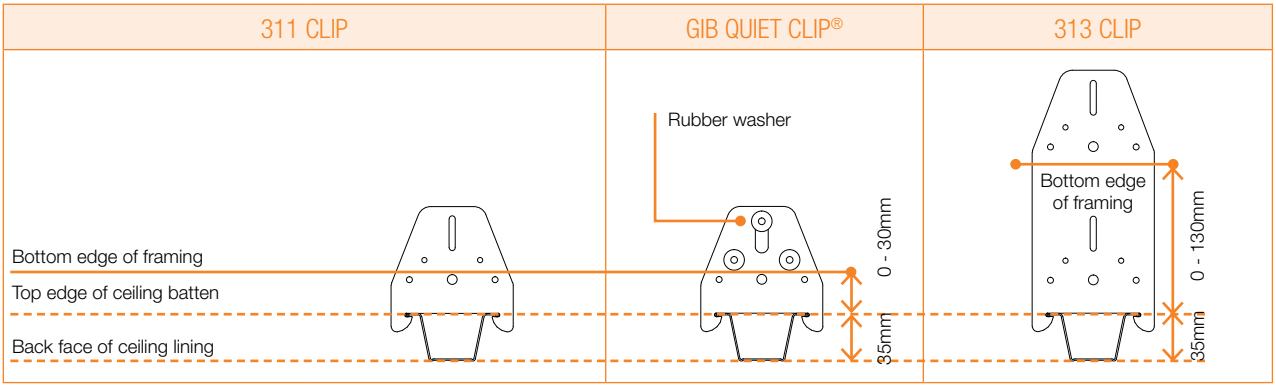

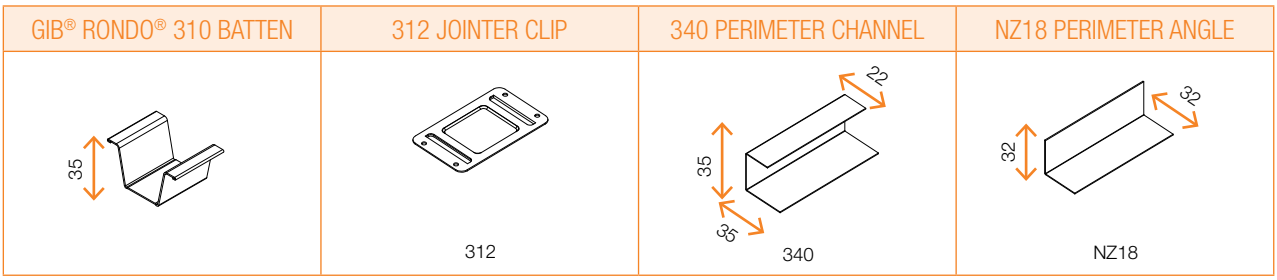

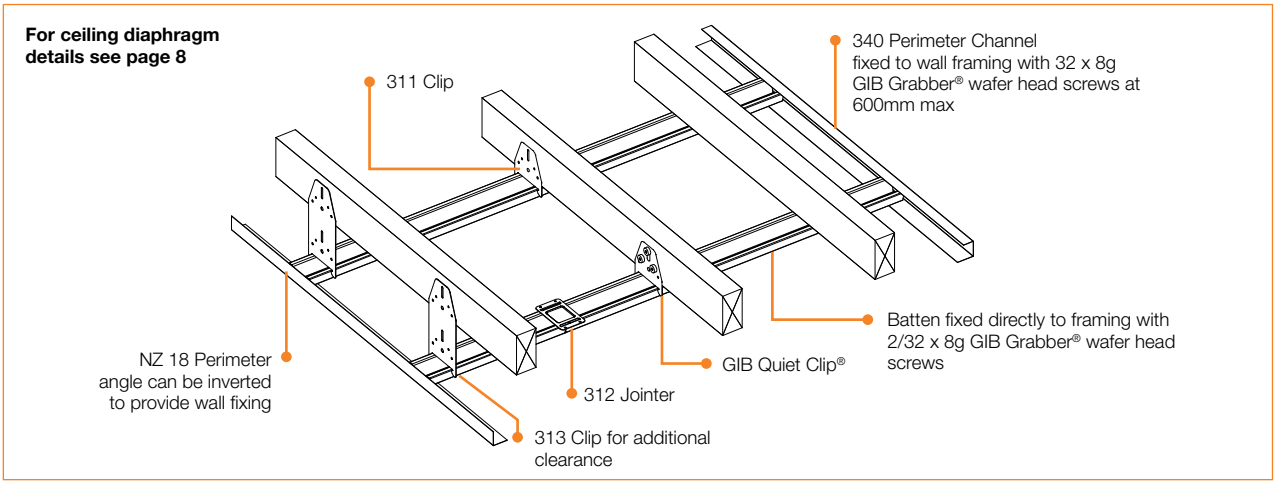

GIB® RONDO® METAL BATTEN SYSTEM - Approved Building Consent Document - BC210441 - Pg 246 of 512 - 30/08/2021 - ComplyNZ

GIB® RONDO® 310 METAL BATTEN SYSTEM

AUGUST 2012

GIB® RONDO® METAL BATTEN SYSTEM INSTALLATION INSTRUCTIONS

Consult an electrical contractor for any earthing requirement that may need to be incorporated

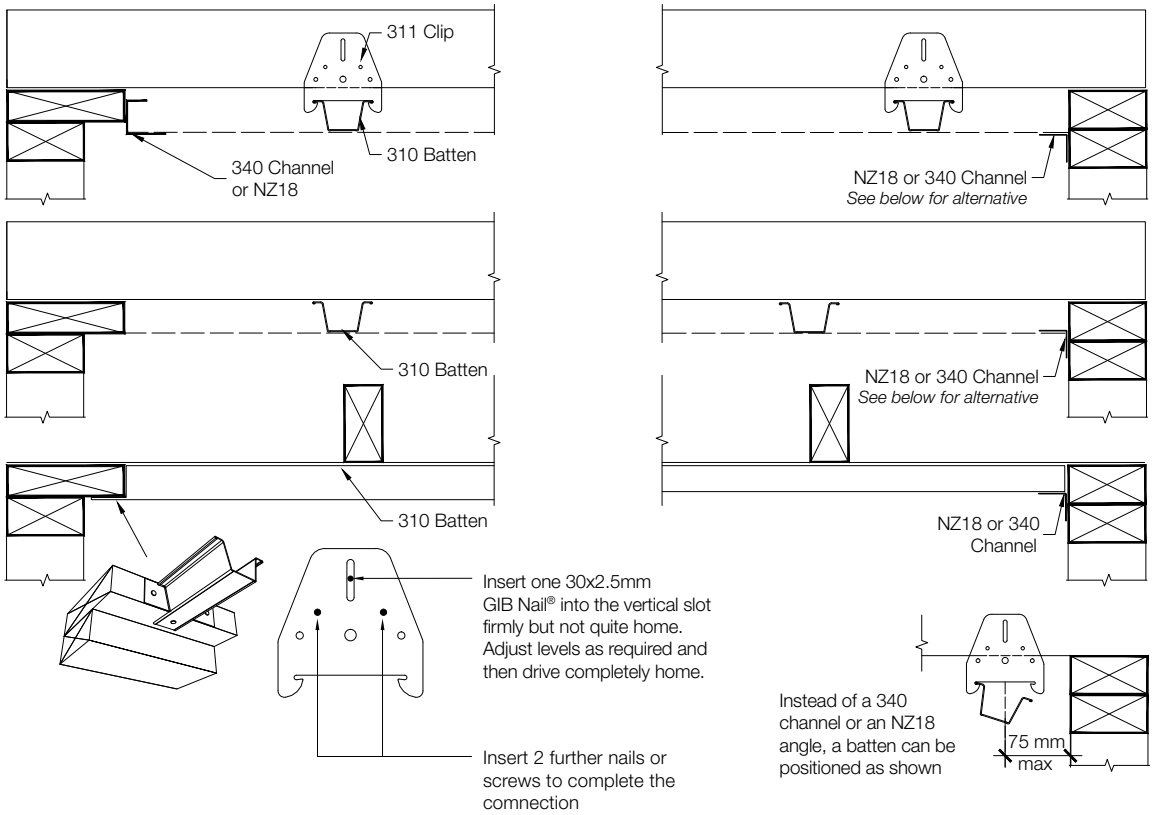

- Establish a datum line for the ceiling
- Place a string line on the datum line at right angles to the battens, under the truss or joist closest to the centre of the room
- Install GIB® Rondo® clips at 600mm centres (450mm for 10mm plasterboard) using the string line to establish the correct position
- Cut the batten to the required length using snips or a hacksaw
- Insert the batten into the channel at each end and fit into the clip
- Install remainder of clips ensuring that the batten is straight and flat

GIB® Rondo® 310 Batten Span Table for Residential Internal Applications

GIB® Plasterboard thickness Single layer	Maximum batten spacing (mm)	Multi Span (mm)	Single Span and Garages (mm)
10mm	450	1200	900
13mm	600		

For situations not covered by this chart please contact the GIB®Helpline on 0800 100 442

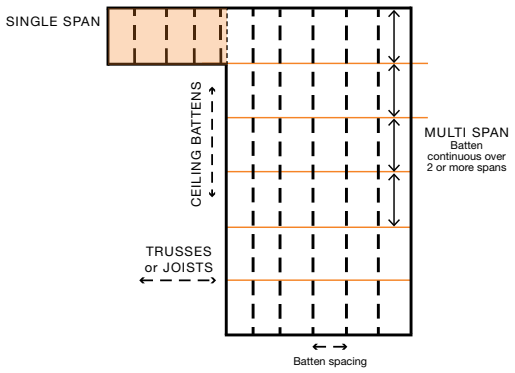

KDC - Approved Building Consent Document - BC210441 - Pg 247 of 512 - 30/08/2021 - ComplyNZ

GIB® RONDO® 308 METAL BATTEN SYSTEM

GIB® RONDO® 308 METAL BATTEN SYSTEM

The GIB® Rondo® 308 system is a light weight yet very strong ceiling batten. In addition to its function as a ceiling batten it can also be used as a wall furring channel and is an integral part of GIB® Noise control systems. *See page 9 for details.*
Consult an electrical contractor for any earthing requirements that may need to be incorporated.

The GIB® Rondo® 308 system is installed using either;

- 226 clip for a drop of 0-30mm
- 394 clip where a larger drop is required between the bottom of the truss chord, joist or rafter and the back of the ceiling batten. Up to 130 mm clearance between the bottom of the framing and the back of the batten of can be achieved in order to accommodate services or variations in framing heights

Note: If the 308 system is to be used in a ceiling diaphragm, the batten needs to secured directly to the framing. See page 8 for details.

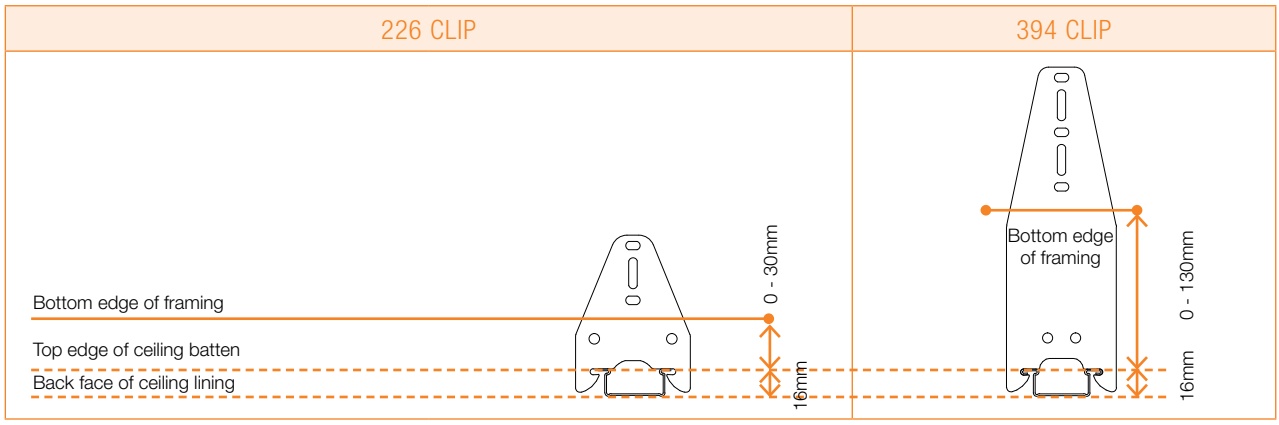

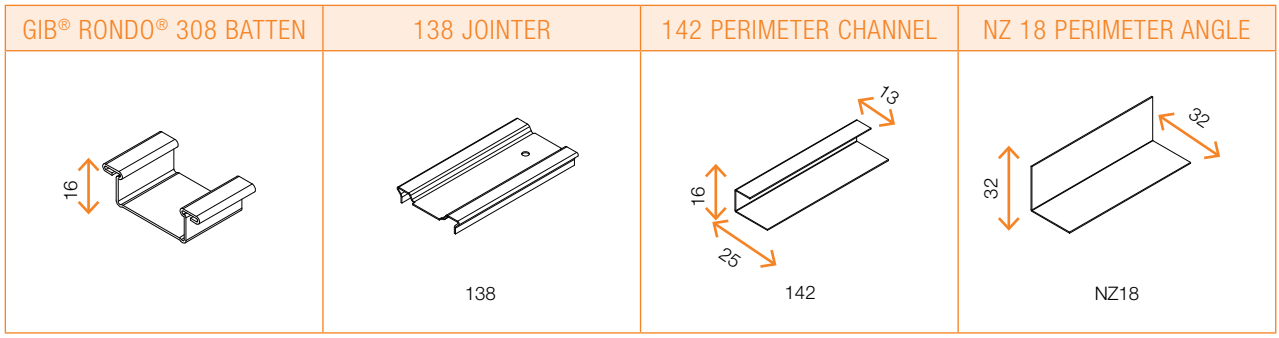

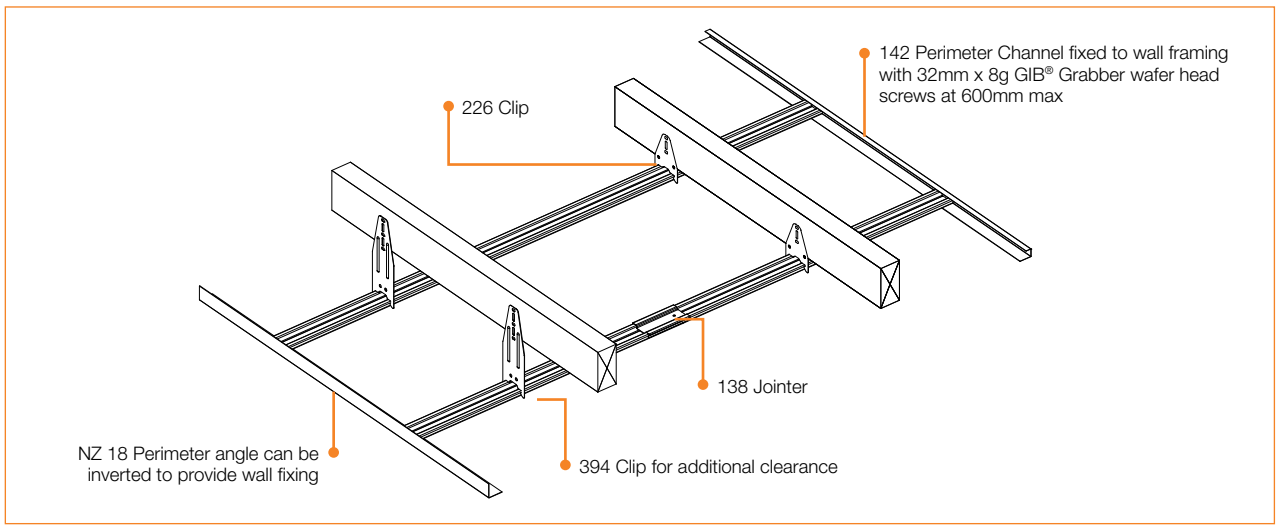

GIB® RONDO® METAL BATTEN SYSTEM - Approved Building Consent Document - BC210441 - Pg 248 of 512 - 30/08/2021 - ComplyNZ

GIB® RONDO® 308 METAL BATTEN SYSTEM

AUGUST 2012

GIB® RONDO® METAL BATTEN SYSTEM INSTALLATION INSTRUCTIONS

Consult an electrical contractor for any earthing requirement that may need to be incorporated.

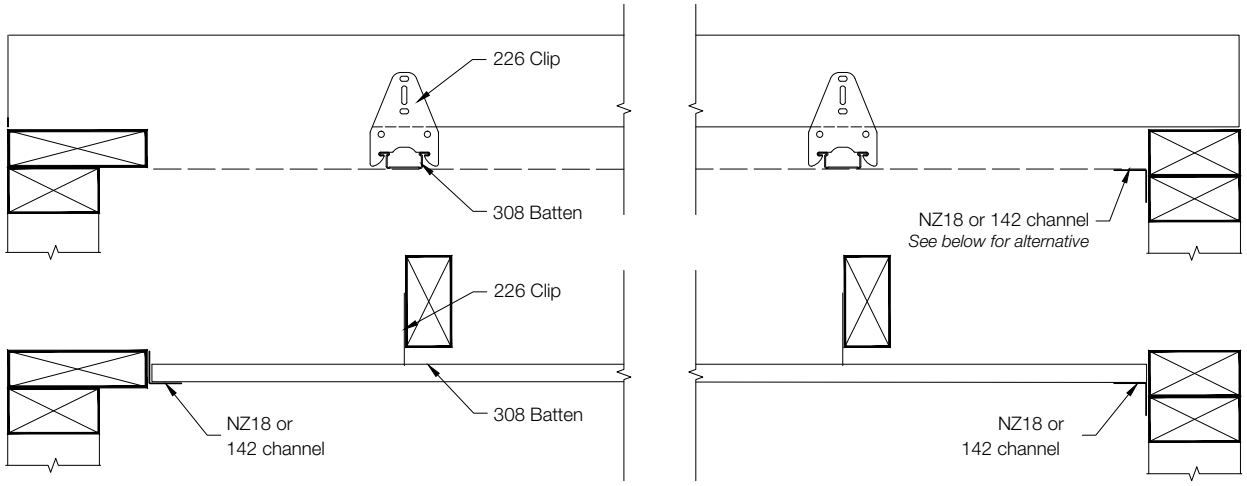

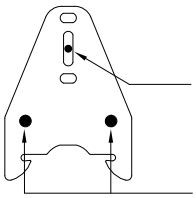

Insert one 30x2.5mm GIB Nail® into the vertical slot firmly but not quite home. Adjust levels as required and then drive completely home.

Insert 2 further nails or screws to complete the connection

Instead of a 142 channel or an NZ18 angle, a batten can be positioned as shown

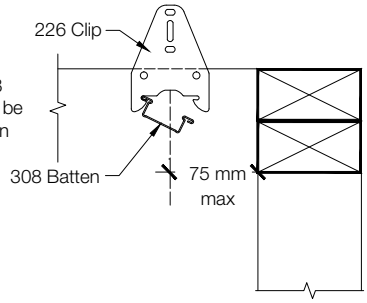

- Establish a datum line for the ceiling
- Place a string line on the datum line at right angles to the battens, under the truss or joist closest to the centre of the room
- Install GIB® Rondo® clips at 600mm centres (450mm for 10mm plasterboard) using the string line to establish the correct position
- Cut the batten to the required length using snips or a hacksaw
- Insert the batten into the channel at each end and fit into the clip
- Install remainder of clips ensuring that the batten is straight and flat

GIB® Rondo® 308 Batten Span Table for Residential Internal Applications

GIB® Plasterboard thickness Single layer	Maximum batten spacing (mm)	Multi Span (mm)	Single Span and Garages (mm)
10mm	450	1200	900
13mm	600		

For situations not covered by this chart please contact the GIB®Helpline on 0800 100 442

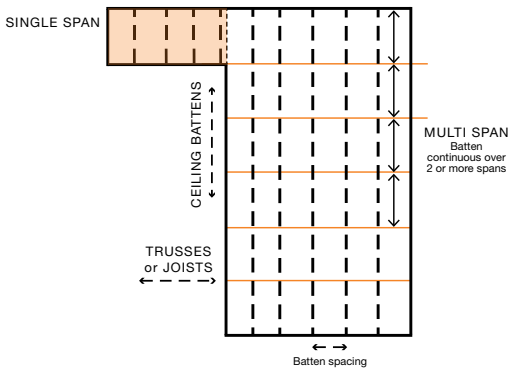

KDC - Approved Building Consent Document - BC210441 - Pg 249 of 512 - 30/08/2021 - ComplyNZ

GIB® RONDO® COMPONENTS

AUGUST 2012

GIB® RONDO® METAL BATTEN SYSTEM - RDO - Approved Building Consent Document - BC210441 - Pg 250 of 512 - 30/08/2021 - ComplyNZ

Ceiling Diaphragms using GIB® Rondo® Metal Battens

GIB® Rondo® metal batten systems may be used in ceiling diaphragms as required for GIB Ezybrace® systems provided that;

- The batten is either fixed directly to the underside of the ceiling framing OR
- The batten is fixed to a block or continuous member that has been securely attached to the ceiling framing with 4x90mm nails (minimum)

NOTE: It is not acceptable to install a ceiling diaphragm on clips without additional support as shown below:



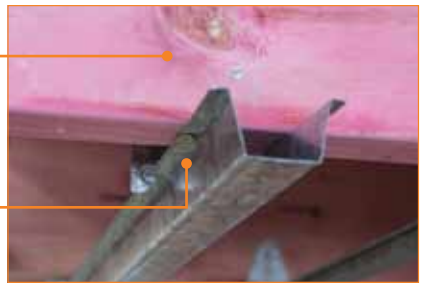

CEILING DIAPHRAGM PERIMETER

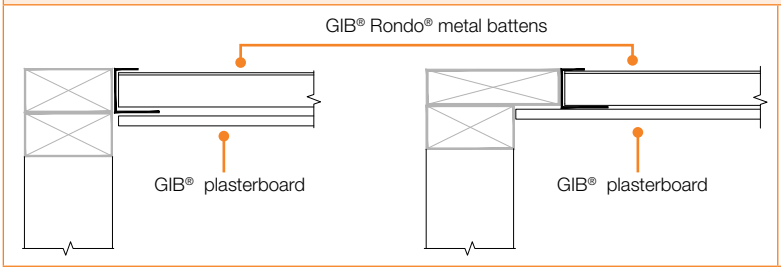

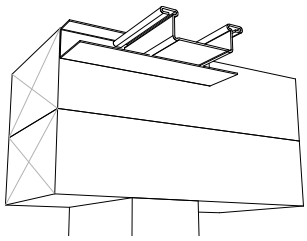

Perimeter channel, (340, 142 or 140) to be fixed with 32mm x 8g GIB® Grabber® wafer head screws at 300mm centres

CHANGE IN PLANE

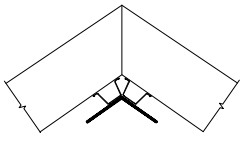

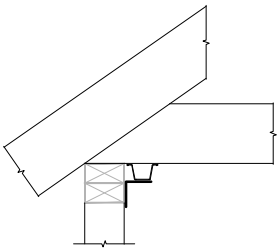

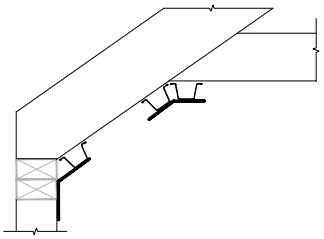

Changes in plane can be achieved by attaching a folded metal angle to the junction.

- Minimum 0.55mm BMT
- Fastened on each edge using 2.8mm x 30mm GIB® Nails or 32mm x 8g GIB® Grabber® wafer head screws at 300mm centres
- Plasterboard linings to be fastened to each edge of the folded angle at 150mm centres

GIB® Rondo® wall strapping systems

In addition to the ceiling batten function the GIB® Rondo® 308 batten system can be used as a wall strapping channel for masonry or concrete wall construction. The adjustable length masonry anchor allows insulation to be installed if required.

A239 CLIP	237 CLIP
Threaded hole, Masonry anchor included (100mm or 180mm)	Unthreaded hole, No masonry anchor included Suitable for timber or masonry application

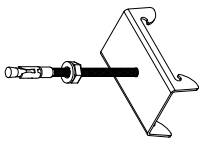

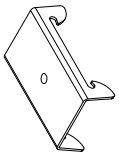

GIB® RONDO® COMPONENTS

AUGUST 2012

KDC - Approved Building Consent Document - BC210441 - Pg 251 of 512 - 30/08/2021 - ComplyNZ

The A239 clip can be used in conjunction with the 308 batten to provide an effective wall strapping solution. If required polystyrene insulation can be fitted over the anchor bolts. A239 clips should be spaced at 1200mm centres vertically (max) and 600mm centres horizontally (max).

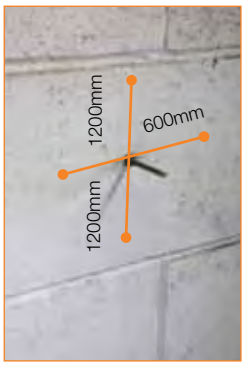









GIB® Rondo® and Noise Control

GIB® Rondo® metal batten systems play an important part in GIB® Noise control systems.

GIB QUIET CLIP®



The GIB Quiet Clip® has rubber grommets that provide isolation between the ceiling and the ceiling framing. Installation is the same as for the 311 clip.

ST001 ACOUSTIC MOUNT





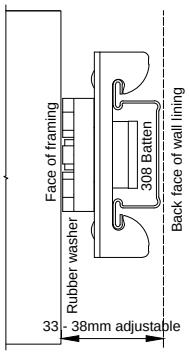

The ST001 clip has a threaded rubber washer to provide isolation from the wall framing. The thread allows the clip to be adjusted to compensate for framing deviations. The clip accepts the GIB® Rondo® 308 batten. This is a high performing noise control system and can deliver STC ratings up to 62.

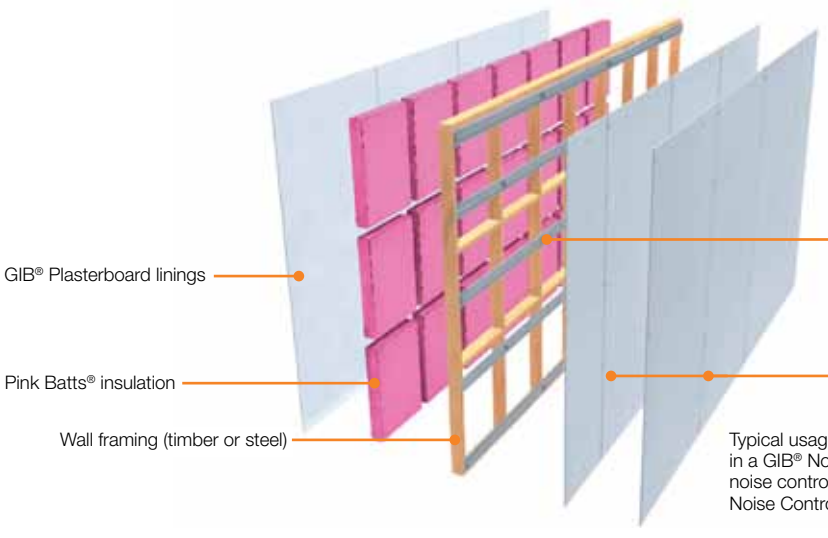

Typical usage of ST001 clip with GIB® Rondo® 308 batten in a GIB® Noise control system. For full installation details for noise control systems please refer to the publication GIB® Noise Control Systems (www.gib.co.nz)

SUSPENDED CEILING SYSTEMS

Suspended ceiling layout and spans are subject to specific design. For further information please contact the GIB® Help line on 0800 100 442

The range of GIB® Rondo® suspended ceiling componentry provides additional clearance above the ceiling level. This could be to run electrical, plumbing or ventilation equipment. The system allows for the ceiling lining material to be directly attached to the lower face of the battens. This is not to be confused with a two way grid system which accommodates proprietary ceiling tiles.

The components can be assembled in a wide range of combinations to suit a variety of applications.

Curved ceilings can also be created by curving the Top Cross Rail (TCR) and attaching the batten to the TCR.

For details on curving componentry contact the GIB® Helpline on 0800 100 442.

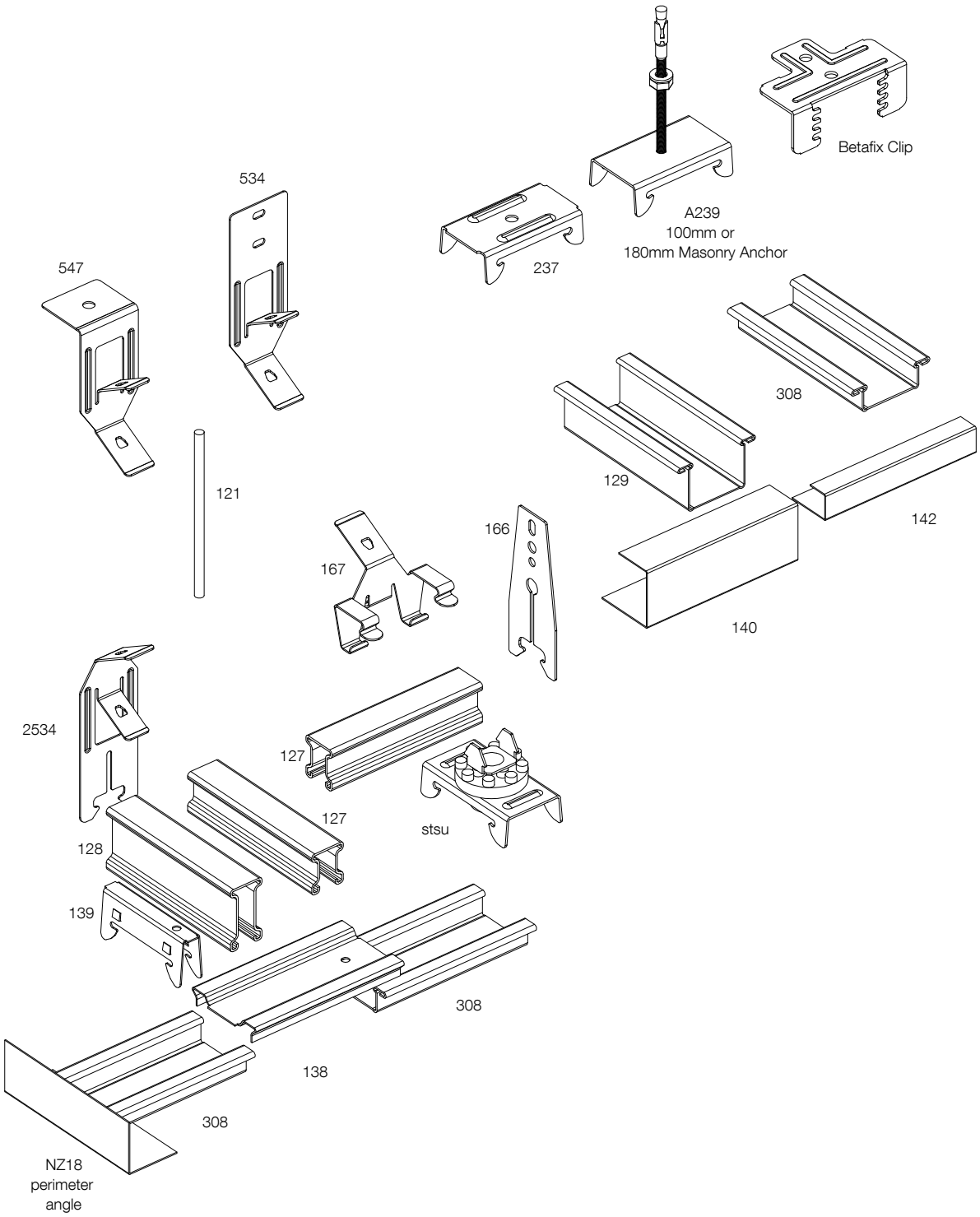

GIB® RONDO® METAL BATTEN SYSTEM - Approved Building Consent Document - BC210441 - Pg 252 of 512 - 30/08/2021 - ComplyNZ

SUSPENDED CEILING SYSTEMS

KDC - Approved Building Consent Document - BC210441 - Pg 253 of 512 - 30/08/2021 - ComplyNZ

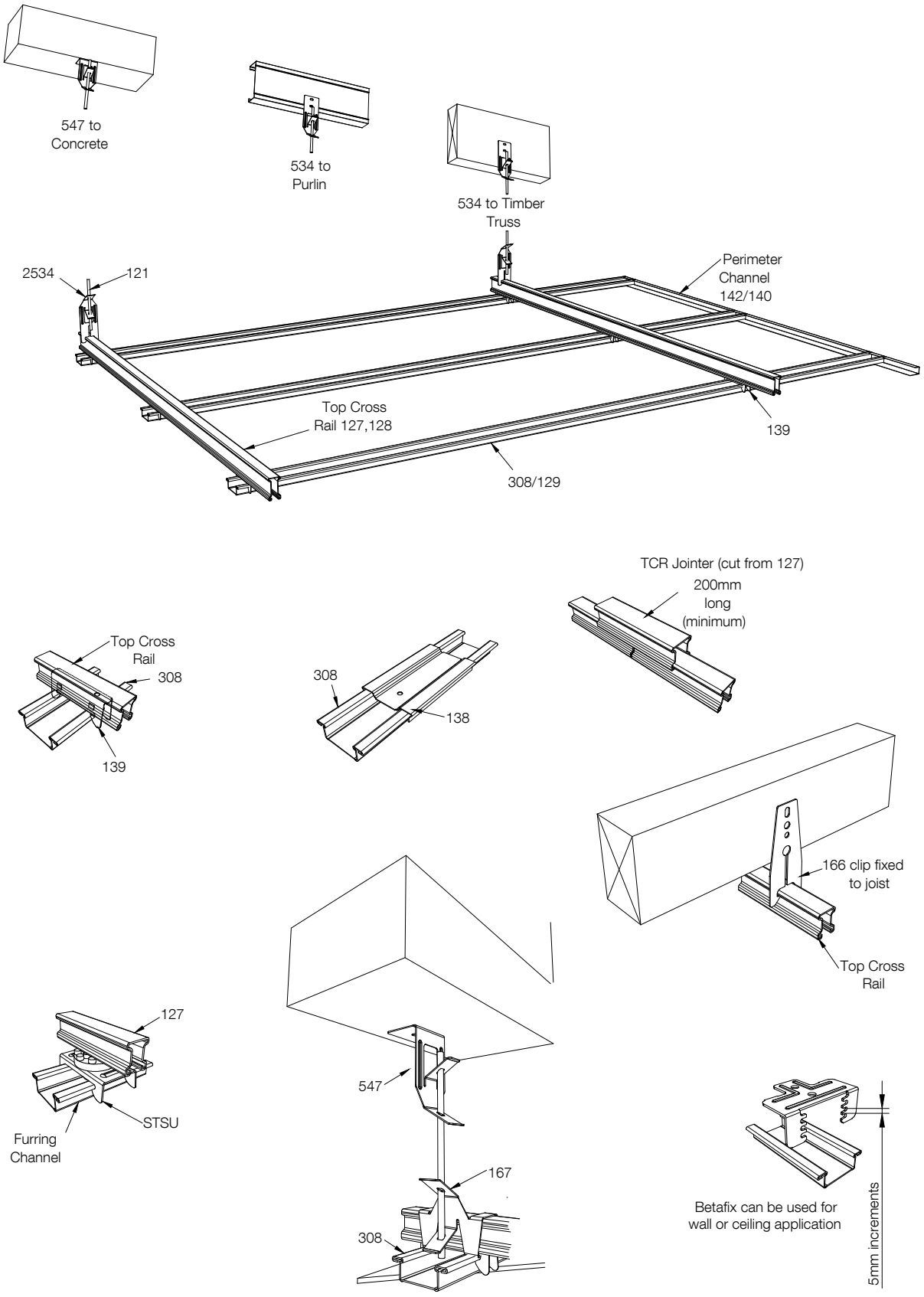

NOTES

AUGUST 2012

Approved Building Consent Document - BC210441 - Pg 254 of 512 - 30/08/2021 - ComplyNZ

KDC - Approved Building Consent Document - BC210441 - Pg 255 of 512 - 30/08/2021 - ComplyNZ

GIB Products

Manufactured by Winstone Wallboards Ltd. Distributed nationwide by authorised distributors.

Trademarks

The names GIB®, GIB Ultraline®, GIB Toughline®, GIB Noiseline®, GIB Braceline®, GIB Aqualine®, GIB Wideline®, GIB Fyreline®, GIB Soundseal®, GIB Cove®,
GIB Rail®, GIB Tradeset®, GIB Handibrac®, the colour mauve for GIB Toughline® and the colour blue for GIB Braceline®, GIB Living Solutions®, GIB Living®,
GIB Dry Zone®, GIB Tough Zone®, GIB Feature Zone®, GIB Fix®,
GIB Quiet Zone® and EzyBrace® are all trademarks of Fletcher Building Holdings Ltd

GIB Helpline - Call Free

0800 100 442

Free Facsimile

0800 229 222

Website

www.gib.co.nz

Auckland

P.O Box 12 256 Penrose. Telephone 09 - 633 0100

Facsimile 09 - 633 0101

Copyright © Winstone Wallboards Ltd, 2012

Printed in New Zealand using mineral-oil-free inks on environmentally responsible Media Satin using PEFC pulp from a mill that is EMAS accredited and ISO 14001 certified.

KDC - Approved Building Consent Document - BC210441 - Pg 256 of 512 - 30/08/2021 - ComplyNZ

Winstone Wallboards Limited

37 Felix Street, PO Box 12256
Penrose, Auckland, New Zealand
Phone 64-9-633 0100, Facsimile 64-9-633 0101
Website: www.gib.co.nz
Email: info@gib.co.nz

GIB® Helpline: 0800 100 442
Facsimile: 0800 229 222

KDC - Approved Building Consent Document - BC210441 - Pg 257 of 512 - 30/08/2021 - ComplyNZ

CBI 5113
SEPT 2018.
RRP $9.95 INCL GST

GIB®

Site Guide

For Residential and Commercial Installations.



ABOUT WINSTONE WALLBOARDS

Winstone Wallboards Ltd, marketed under the GIB® brand, is New Zealand's largest manufacturer and marketer of gypsum plasterboard, drywall systems and associated products and services. Winstone Wallboards has manufactured plasterboard since 1927 and is committed to the advancement of the New Zealand building industry through ongoing technology development, industry skills training programmes, industry association sponsorship and a number of wider industry initiatives.

This guide provides you with the essential information needed when designing with, and installing, GIB® Systems.

GIB® Help Line – Call Free

0800 100 442

Free Facsimile

0800 229 222

Email

info@gib.co.nz

Website

gib.co.nz

The names GIB®, GIB Fyreline®, GIB Ultraline®, GIB Barrierline®, GIB Braceline®, GIB Toughline®, GIB Toughline®Aqua, GIB Noiseline®, GIB Aqualine®, GIB® Nail, GIB Tradeset®, GIB Plus®, GIB-Cove®, GIB Lite Blue®, GIB Tradefilla®, GIB Fix®, GIB RocTape®, GIB Wideline®, GIB Trade Finish®, GIB® RediFilla™, GIB TradeFilla®, the colour chalive for GIB Toughline®, the colour blue for GIB Braceline® / GIB Noiseline®, the colour pink for GIB Fyreline®, the colour green for GIB Aqualine®, and the shield device are registered trademarks of Fletcher Building Holdings Limited.

Copyright © Winstone Wallboards Ltd 2018

USE ONLY THE CURRENT SPECIFICATION

This publication may be superseded by a new publication. Winstone Wallboards Ltd accepts no liability for reliance upon publications that have been superseded.

Before using this publication check whether this is the current publication; simply call the GIB® Helpline on 0800 100 442 or visit gib.co.nz

KDC - Approved Building Consent Document - BC210441 - Pg 258 of 512 - 30/08/2021 - CopyNZ

GIB® Warranty Statement

WE ARE 100% BEHIND OUR PRODUCTS AND SYSTEMS

If any of our products or systems* fail to perform as claimed or an issue associated with any GIB® product or system does occur, Winstone Wallboards will work with the relevant parties to help resolve the issue.

SYSTEM AND PRODUCT COMPONENTS

A system is a group of related product components that interact to perform a task. To ensure the full GIB® building system, including the appropriate GIB® branded products, are specified and installed. This will ensure performance is not compromised and that any failure that is attributable to GIB® products and/or systems will be supported. **Winstone Wallboards will not support system performance where substitute products are used.**

BRANZ Appraised
Appraisal Nos. 427 [2007], 539 [2012], 940 [2016], 528 [2016], 394 [2017]

YOU'RE PROTECTED WITH GIB® PLASTERBOARD SYSTEMS**

Since 1927 building professionals have relied on GIB® plasterboard systems. Locally made for local conditions, they meet or exceed the New Zealand building code, are BRANZ appraised and are backed by full technical information and support to give complete confidence in using GIB® plasterboard systems*.Winstone Wallboards is committed through its heavy investment in quality management and technical support to ensure that GIB® products and systems perform as claimed. Comprehensive statements of 'fitness for purpose', functional performance and code compliance, including durability, are contained in GIB® literature and in the relevant BRANZ Appraisal.

PRODUCT AND SYSTEM WARRANTY**

The Winstone Wallboards warranty covers GIB® products and/or systems for a minimum of 10 years from the date of purchase. Winstone Wallboards warrants that GIB® products will be free from defects caused by factory workmanship or materials and, subject to compliance with the conditions in the Winstone Wallboards warranty statement, that the product or system will perform to the extent set out in relevant Winstone Wallboards published literature current at the time of installation. Nothing in this document shall exclude or modify any legal rights a customer may have under the Consumer Guarantees Act or otherwise which cannot be excluded or modified at law.

NZ BUILDING CODE CLAUSE B2 – DURABILITY

The Building Code sets the required durability standard for specific elements of building work. Clause B2 Durability aims to ensure that building elements and buildings are durable enough so all other objectives of the Building Code are satisfied throughout the life of the building, without the need for reconstruction or major renovation.

GIB® SYSTEMS DURABILITY

The following systems have, unless stated otherwise in the technical literature, a serviceability life in excess of that stated and satisfy the requirements of NZBC Clause B2 Durability.

15 Years

— GIB Aqualine® Wet Area Systems

50 Years

— GIB® Fire Rated Systems
— GIB EzyBrace® Systems
— GIB X-Block® Systems
— GIB Noise Control® Systems
— GIB® Intertenancy Barrier Systems

*When installed and maintained strictly in accordance with the relevant Winstone Wallboards literature current at the time of installation and under normal conditions of dry internal use.

**Visit gib.co.nz/warranty to view the full GIB® products and systems warranty including terms and conditions.

KDC - Approved Building Consent Document - BC210441 - Pg 259 of 512 - 30/08/2021 - CompliNZ

Site Guide: Table of Contents

1.0 INTRODUCTION 4

1.1 GIB® Systems Literature 4
1.2 GIB® Products and Systems 4
1.3 Substitution 4
1.4 Achieving the Desired Finish Quality 4
1.4.1 Levels of Finish 4
1.4.2 Levels of Finish Selection Chart 5
1.4.3 Levels of Finish Guidelines 6
1.4.4 Assessment Of The Surface Condition At Handover 7
1.4.5 Critical Lighting 8
1.4.6 Other Factors that Influence the Finished Surface 8
1.5 Health and Safety 9
1.6 Compliance 9
1.7 Limitations 9
1.8 Complaints Procedure 9

2.0 GIB® PRODUCT RANGE 10

2.1 GIB® System Brochures 10
2.2 GIB® Plasterboard Range 12
2.3 Board Substitution Options 14
2.4 GIB® Fasteners 15
2.5 GIB® Rondo® Metal Batten Ceiling System 16
2.6 GIB® Adhesives and Sealants 18
2.7 GIB-Cove® 18
2.8 GIB® Compounds 19
2.9 GIB® Paper Faced Trims 22

3.0 PRE – INSTALLATION 25

3.1 GIB® Deliver to Site Services 26
3.2 Pre – Installation Checklist 28
3.3 Site Conditions 29
3.4 Stacking, Storage and Handling 29
3.5 Protection from Weather 30
3.6 Ordering and Delivery 30
3.7 Timber Moisture Content 30
3.8 Waste Minimisation 30
3.9 Site Health and Safety 30
3.10 Required Tools 32

4.0 GENERAL WALL AND CEILING INSTALLATION 33

4.1 Before Starting Installation 33
4.2 General Installation Technique 34
4.3 GIB® Plasterboard Installation – Walls 38
4.3.1 Timber Frame – Horizontally Fixed 38
4.3.2 Timber Frame – Vertically Fixed 39
4.3.3 Steel Frame – Horizontally Fixed 40
4.3.4 Steel Frame – Vertically Fixed 41
4.3.5 Fastening to Metal Studs 42
4.3.6 Grooved Jambs and Architraves 43

KDC - Approved Building Consent Document - BC210441 - Pg 360 of 512 - 30/08/2021 - ComplyNZ

KDC - Approved Building Consent Document - BC210441 - Pg 261 of 512 - 30/08/2021 - ComplyNZ

4.4 Installation to Ceilings 44
4.4.1 General Installation 44
4.4.2 Standard Ceiling Fixing 45
4.4.3 Raking Ceilings and Skillion Roofs 46
4.4.4 Back Blocking – Butt and Edge Joints 47
4.4.5 Control Joints – Walls and Ceilings 48
4.4.6 GIB® Rondo® 310 Metal Batten System Installation Instructions 51
4.4.7 GIB® Rondo® 308 Metal Batten System Installation Instructions 53
4.4.8 GIB® Rondo® Suspended Ceiling System 55
4.5 Curving GIB® Plasterboard 56
4.6 Fixing to Masonry 57

5.0 GIB® PERFORMANCE SYSTEMS 59

5.1 GIB® Bracing Systems 59
5.1.1 Installation Summary 60
5.1.2 System Specifications 61
5.1.3 Bottom Plate Fixing 63
5.1.4 Panel Hold-Down Details 63
5.1.5 GIB EzyBrace® Corner Fastener Pattern 65
5.1.6 Permitted GIB EzyBrace® Plasterboard Substitutions 66
5.1.7 General Installation Details 66
5.1.8 Ceiling Diaphragms 68
5.2 GIB Aqualine® Wet Area Systems 70
5.2.1 Surface in Showers and Around Baths 71
5.2.2 Fixing Details for Non Tiled Walls 72
5.2.3 Fixing Details for Tiled Walls 72
5.2.4 Tiling, Flexible Sheet Vinyl and Rigid Sheet Shower Linings 73
5.2.5 Typical Construction Details 74
5.3 GIB® Fire, Noise and Other Performance Systems 77
5.3.1 GIB® Fire Rated Systems 77
5.3.2 GIB Noise Control® Systems 77

6.0 JOINTING AND FINISHING SYSTEMS 78

6.1 Jointing – Materials 78
6.2 Determining How Much You Need 79
6.3 Weather and Ventilation 80
6.4 Identifying Product Use By Dates 82
6.5 Stopping of Tapered or Recessed Edge Joints – Hand Tools 83
6.6 Jointing Techniques – Hand Tools 84
6.7 Stopping of End Joints / Butt Joints and Cut Edges – Hand Tools 86
6.8 Jointing Techniques – Mechanical Tools 87
6.9 Nail and Screw Stopping 90
6.10 External and Internal Corners 90
6.11 Negative Detail 92
6.12 GIB-Cove® 93
6.13 Skim Coating 94
6.14 Sanding 96
6.15 Joint Systems Recommendation 97
6.16 Painting 99
6.17 Plaster Rendering Interior Masonry or Concrete 99

7.0 REPAIRS AND MAINTENANCE 101

7.1 Plasterboard Repairs 101
7.2 Mounting Fixtures to GIB® Plasterboard 105

8.0 GIB® TROUBLESHOOTING 106

KDC - Approved Building Consent Document - BC210441 - Pg 262 of 512 - 30/08/2021 - ComplyNZ

1.0 INTRODUCTION

The planning, building and finishing of a home or commercial building has a large number of important considerations. This guide provides you with the essential information needed when designing with, and/or installing, GIB® systems.

GIB® systems specifically designed for fire rating, noise control, bracing and wet areas are not fully documented in this guide. Please refer to the relevant sections in the specific technical publications.

1.1 GIB® SYSTEMS LITERATURE

Winstone Wallboards offers an extensive range of tested systems to ensure compliance with the requirements of the New Zealand Building Code.

Detailed information about these systems can be found in GIB® systems literature (see p. 10–11).

1.2 GIB® PRODUCTS AND SYSTEMS

GIB® systems incorporate different GIB® products, which are manufactured or supplied by Winstone Wallboards and are distributed nationwide by authorised dealers.

Winstone Wallboards has a range of GIB® branded jointing compounds, adhesives, fasteners and other drywall products. It is recommended that these GIB® branded products are used with GIB® plasterboard systems. They have been specifically developed or chosen by Winstone Wallboards for their compatibility with GIB® plasterboard systems.

Refer to the installation section for instructions on how to handle, store, install, fix and maintain GIB® products and systems. These instructions must be followed if GIB® systems are to achieve their claimed performance levels.

1.3 SUBSTITUTION

Winstone Wallboards accepts no liability if the systems are not installed in accordance with instructions contained in the GIB® technical literature. Substitution of specified or recommended components with alternative brands can compromise performance.

If alternative produts are substituted into GIB® Systems it is the responsibility of the user to ensure that the performance of the system is not compromised.

1.4 ACHIEVING THE DESIRED FINISH QUALITY

No matter how smooth wall and ceiling linings may appear, they will never be 100% physically flat. It is possible however to achieve the 'appearance' of blemish free flatness with the appropriate choice of a number of factors. For more detail refer to the 'GIB® Interior Finishing' literature. Download from gib.co.nz or call 0800 100 442 for a copy.

1.4.1 Levels of Finish

Having a clear understanding of the Levels of Finish is an important step in delivering an acceptable finished surface.

- Levels of Finish are a set of guidelines contained in AS/NZS 2589:2017 for specifying the required quality of finish prior to the application of decorative finishes such as paint
- No sheet lining material or substrate has a surface that is perfectly flat and totally free of minor imperfections
- It is important to be aware that Levels of Finish apply only to the finished plasterboard surface PRIOR to the application of any paint or decorative systems

Often there is a gap between the finish that a customer expects and the finish that can realistically be delivered. There are several factors that influence the final finished appearance. These include:

- Natural or artificial light from a critical angle
- Installation techniques and workmanship
- Stopping techniques and workmanship

Three Levels of Finish are defined in AS/NZS 2589:2017.

KDC - Approved Building Consent Document - BC210441 - Pg 263 of 512 - 30/08/2021 - ComplyNZ

Level 3 — Level 3 must be used in areas that do not require decoration, such as above ceiling level or inside service shafts and the like.

All joints and interior angles must have tape embedded in joint compound and one separate coat of joint compound applied over all joints and fastener heads. All joint compounds must be finished smooth. (Generally this is achieved by scraping off nibs and ridges and the like, with the edge of a trowel.)

Level 4 — Level 4 shall be the default level of finish for gypsum linings unless specified otherwise.

Flat or low sheen paints must be used for this level.

All joints and interior angles must have tape embedded in jointing compound and a minimum of two separate coats of jointing compound applied over all joints, angles, fastener heads and accessories. All jointing compound must be finished evenly and be free of tool marks and ridges in preparation for decoration.

Note:

Under critical lighting conditions surface imperfections may still be apparent in a Level 4 finish.

Level 5 — Level 5 is for use where gloss or semi-gloss paints are specified or where critical lighting conditions occur on flat or low sheen paints. Level 5 is characterised by a parity of texture and porosity. The surface texture must be random in fashion and monolithic, concealing joints and fixing points.

All joints and interior angles must have tape embedded in joint compound plus a minimum of two separate coats of joint compound applied over all joints, angles, fastener heads and accessories. All joint compound must be finished smooth and be free of tool marks and ridges.

A paint or plaster material shall then be sprayed, rolled or trowelled over the defined area in accordance with the manufacturers recommendations.

Note:

- Level 5 is difficult to achieve and always requires co-operation of the framer, plasterboard installer, plasterer and painter in establishing suitable work practices that deliver the agreed paint finish for the given project
- Some minor imperfections may still be visible in a Level 5 finish, however these will be minimised under the additional measures applied under Level 5
- The surface of the defined area may require sanding to be suitable for decoration

1.4.2 Levels of Finish Selection Chart

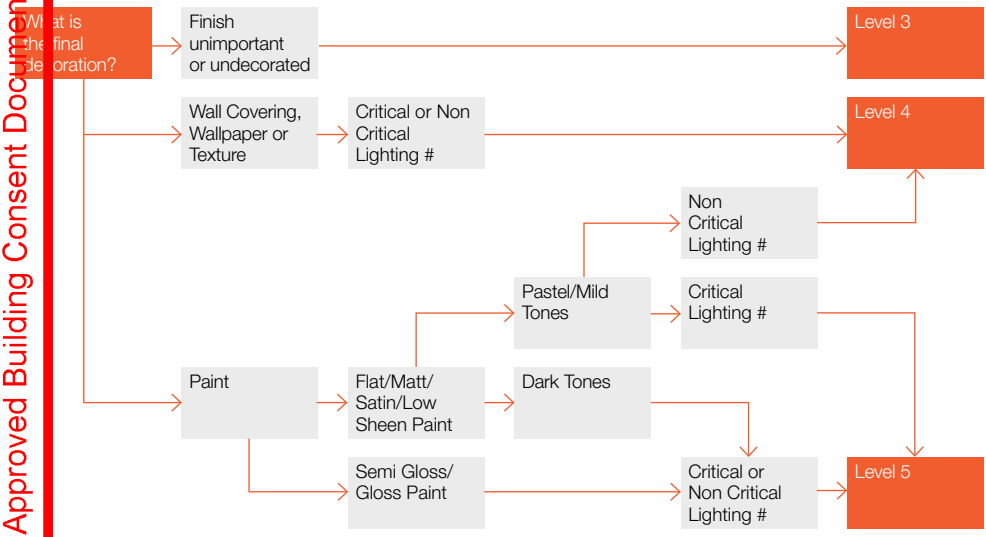

* May not be suitable for subsequent decoration to high levels of quality in the future. Refer to Level 4 or 5 for upgrading requirements.
# Critical lighting – when the light source is nearly parallel to the surface.
Non critical lighting – when the light striking the surface is diffused and / or at right angles

KDC - Approved Building Consent Document - BC210441 - Pg 264 of 512 - 30/08/2021 - ComplyNZ

1.4.3 Levels of Finish Guidelines

For light timber framed construction as extracted from AS/NZS 2589:2017.

Note: It is important to recognise that the Level of Finish approach was developed to optimise installed plasterboard surfaces IN PREPARATION for decoration and NOT as a basis for establishing acceptance or rejection criteria for the final decorated surface.

	Levels of Finish Guidelines			
	Level 3	**Level 4**	**Level 5**	
Framing Requirements				
Maximum deviation from a 1800mm straight edge along or across adjacent framing members	90% of measured points must be less than 4mm 10% may be no more than 5mm		90% – less than 3mm 10% no more than 4mm	Preline
Timber moisture content at the time of lining	18% or less.			Preline
	NZS 3602 recommends lower moisture content (8% - 18%) if heat pumps, air conditioning or central heating are to be installed			Preline
Installation Requirements				
Wall Joints	Sheets must be set out to minimise joints, usually requiring wall sheets to be horizontally fixed			Plasterboard Fixer
Joints round openings	Vertical joints must not coincide with the vertical edge of doors or windows. If a joint needs to be made in this area it must be made above the opening, no closer than 200mm to the edge of the opening			Plasterboard Fixer
Control Joints	Control Joints must be positioned at maximum 12.0m centres in either direction. See p. 48			Plasterboard Fixer
Sheet and butt joints in ceilings	These must be made centrally between ceiling battens and back blocked. Butt joints should be staggered by at least 600mm			Plasterboard Fixer
Sheet end butt joints in walls	Can be made on framing or back blocked between studs		All joints must be back blocked	Plasterboard Fixer
Tapered edge joints in ceilings	Back blocking not required but is still highly recommended	Must be back blocked in areas with 3 or more sheet edge joints on timber battens (6 if metal battens have been used) Not required in ceiling suspension systems. See p. 47	All joints must be back blocked	Plasterboard Fixer
Finishing Requirements				
Joints	All joints must have GIB® jointing tape embedded in joint compound PLUS 1 additional coat of joint compound applied over all joints, angles, accessories and fastener heads	All joints must have GIB® jointing tape embedded in joint compound PLUS 2 additional coats of joint compound applied over all joints, angles, accessories and fastener heads.		Stopper
Additional requirements			A skim coat must be applied to remove differential surface porosity	Stopper
*Tapered edge joint total width (incl. formed tapers in backblocked sheets).	170mm min.	250mm min.		Stopper
*Butt joint widths (flat joints)	340mm min.	500mm min.		Stopper
*Joint build-up	Maximum of 2mm build up across entire width as an even curve, without a distinct peak or ridge. Joint should not be hollow.			Stopper
*Joint surface (incl. internal and external corners	No gouges, scratches, voids, pock marks or tool marks. Joint edges should be smooth and feathered without any scuffed paper. Edges should be an even straight line.			Stopper
*External angles	Must be plumb and straight. Minimum joint width 250mm. 3mm max build up at the metal angle over an even, gentle taper. Joint should not be hollow.			Stopper
*Internal angles	Must be plumb and straight. Minimum joint width 100mm. 2mm max build up at the corner, over an even, gentle taper. Joint should not be hollow.			Stopper

1. This chart is intended as a guide only to critical elements relating to Levels of Finish.
2. Full details of the requirements can be found in AS/NZS 2589:2017
3. These minimum requirements have been extracted from AS/NZS 2589:2017

KDC - Approved Building Consent Document - BC210441 - Pg 265 of 512 - 30/08/2021 - Comply NZ

7.4.4 Assessment Of The Surface Condition At Handover

A satisfactory finish for plasterboard linings is dependent on a number of critical factors including the straightness of the underlying substrate to which they are attached. Careful management of localised build-up of joint compound on the surface of plasterboard linings during the finishing process of jointing, internal and external angles and fastener points is also required.

This clause shall be used to assess the finish of joints, angles and fastener points in plasterboard wall or ceiling linings, or both.

Visual satisfaction of the final job can be impacted by the quality of finished decoration. A sign-off form should be used at handover to assist in agreement between the parties on the quality of finish to avoid concerns being levelled at the finish of the plasterboard lining when it may relate to inadequate decoration.

Note: High intensity lighting is commonly used to provide light for work areas or application purposes but is not deemed suitable for performing a subjective visual inspection of interior surfaces. Inspection should be undertaken under normal lighting conditions (in the absence of critical lighting) and from normal viewing positions. See diagram below.

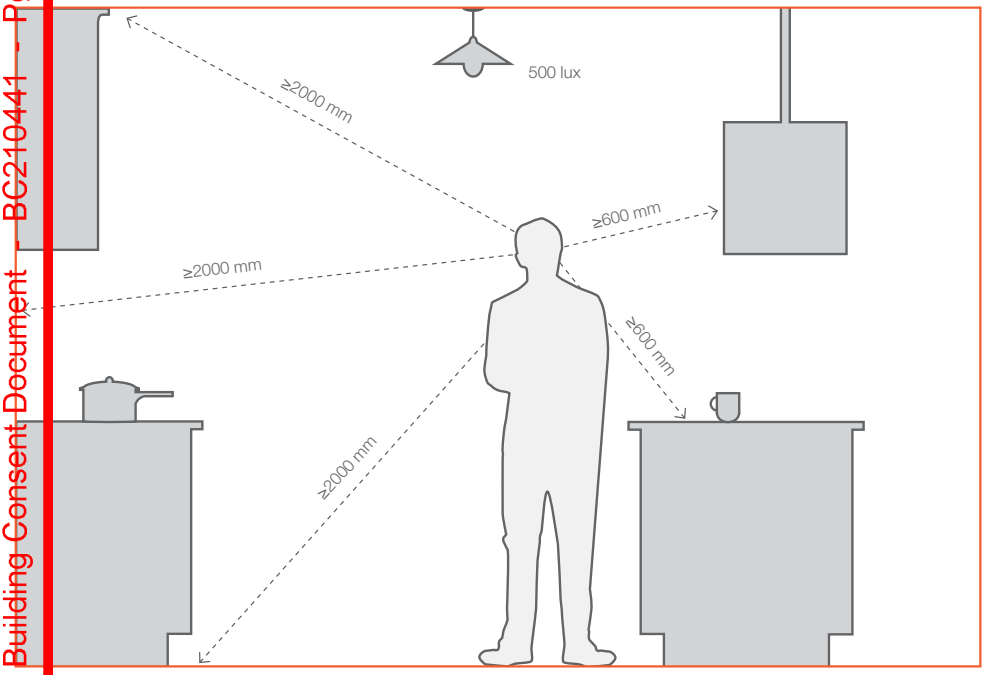

Normal viewing positions vary depending on the type of surface being inspected.

Taken from MBIE Guide to tolerances, materials and workmanship in new residential construction 2015.

KDC - Approved Building Consent Document - BC210441 - Pg 266 of 512 - 30/08/2021 - ComplyNZ

1.4.5 Critical Lighting

When light from sources such as windows, skylights and artificial wall or ceiling washer lights strike a surface at a shallow angle surface, irregularities tend to be exaggerated. This is termed "critical lighting". When the angle of light is more or less at right angles to a surface, imperfections are less obvious – this is termed "non-critical lighting".

Minimising Critical Lighting

- Horizontal Fixing – fix GIB® plasterboard sheets horizontally instead of vertically on walls. GIB® plasterboard fixed horizontally allows glancing light from adjacent windows to shine along the joint reducing the "shadowing" effect that can be more noticeable with vertical fixed. Refer to Figures 1 and 2
- Sheet layout is often determined by the system being installed. Ensure that the sheet layout complies with the installation requirements of the particular system.
- Recessed downlights and light shades – incorporating recessed downlights or light shades help to channel light downwards. Refer to Figures 3, 4 and 5
- Spot Lights – avoid spot lighting or wall mounted up-lighting or be careful about where these lights are directed and the angle at which they hit a surface particularly near jointing
- Window Positioning and Shades – avoid positioning narrow windows hard up against the end of a wall or ceiling, particularly on long walls or ceilings at the end of a room or hallway. Making a window wider and placing it away from the room corner should reduce the critical lighting effect. Avoid taking windows right up to the ceiling level. Provide sunshades over the window or recess the window to stop the sunlight reaching the wall. Refer to Figure 6

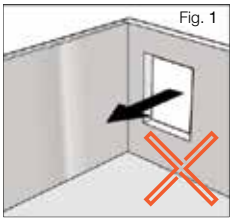
Fig. 1

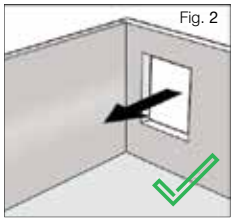
Fig. 2

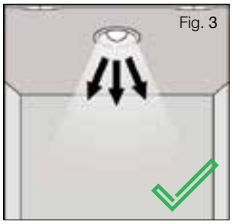
Fig. 3

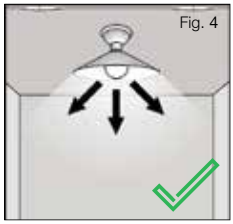
Fig. 4

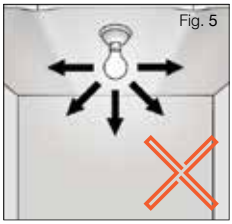
Fig. 5

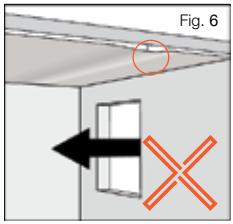
Fig. 6

1.4.6 Other Factors that Influence the Finished Surface

- Heavily textured or patterned finishes tend to hide imperfections
- Smooth, monolithic painted surfaces tend to highlight imperfections
- Matt finishes will aid in disguising imperfections. Conversely, high gloss paint will accentuate imperfections
- Variations in surface, such as negative details, will remove the focus from imperfections
- The method of paint application has an effect. Paint applied by roller will aid in disguising imperfections. Paint applied by spray can accentuate imperfections
- Lighter colours are less likely to show imperfections and are more effective at diffusing light and reducing shadowing, particularly in smaller rooms

KDC Approved Building Consent Document - BC210441 - Pg 267 of 512 - 30/08/2021 - ComplyNZ

1.5 HEALTH AND SAFETY

Under normal conditions of use, GIB® plasterboard presents no known health hazard.

Construction sites can contain multiple hazards. It is important that appropriate health and safety requirements are strictly followed in such environments.

For further information on safety, handling and installing GIB® products and systems refer to the installation section.

1.6 COMPLIANCE

Under normal conditions of dry internal use GIB® plasterboard systems have a service life complying with the durability requirements of NZBC B2 Durability.

The systems and product testing referred to in this guide have been carried out and/or appraised by BRANZ and various other independent testing organisations.

1.7 LIMITATIONS

GIB® plasterboard (paper faced):

- Must not be installed externally or exposed to weather elements for long periods of time without being covered or protected *(refer to exceptions below)
- Must not be handled or installed while in a very damp or wet state
- Must not be placed or installed directly into surface water
- Must not be exposed to chlorine rich environments or areas where relative humidity is greater than 90% RH for long periods of time like; group showers, steam rooms or indoor heated swimming pools
- Must not be exposed to temperatures greater than 52°C for long periods of time as this may cause calcination of the core. Carefully consider the heat output from fittings like: halogen lights, cooking elements, fire places and flues etc. Consult the fitting manufacturer for specifications
- Must not support ceiling loads that exceed 3kg/m² including; light fittings, ceiling fixtures and insulation etc
- Can develop mould growth if left wet or damp for extended periods of time and exposed to airborne or surface contaminants. The plasterboard must be replaced if it has not been able to dry within approx. 48 hour period after becoming wet, or the water source has been contaminated

Electric Radiant Ceiling Heating (ERCH)

- ERCH systems may give rise to abnormal localised or overall temperature conditions in ceiling spaces which could affect the timber framing and GIB® plasterboard linings
- Excessive thermal or hygrometric movement induced by these systems may result in some, or combinations, of the following defects; deterioration of the gypsum in the GIB® plasterboard core (possibly affecting structural and fire resistant rating performance), fastener 'popping', joint peaking or joint cracking
- Prior to construction, we suggest you contact your designer to fully consider these factors in order to optimise surface finish quality
- Winstone Wallboards will not accept liability for surface finish quality problems where ERCH systems are installed in conjunction with any GIB® lining system

*Exceptions - the following range of plasterboard can be installed externally and exposed for the maximum times shown. The plasterboard must be installed in a dry state:

- 25mm GIB Barrierline® 12 weeks maximum
- 16mm GIB Fyreline® (when used in the GIB Barrierline® system) 4 weeks maximum

1.8 COMPLAINTS PROCEDURE

Should a problem be encountered with any GIB® product during installation or delivery, immediately contact the GIB® Helpline on 0800 100 442. Do not continue to use the product that is not performing to specification or expectation. Keep samples of the product in question and where possible, document batch numbers and/or manufacturing dates.

2.0 GIB® PRODUCT RANGE

Because of the volume of information it is not feasible to include all the GIB® systems publications in the GIB® Site Guide.

If you are installing any of the following GIB® systems it is important that you obtain a copy of the relevant publication.

These can be accessed by:
- Downloading from gib.co.nz
- Download the GIB® App available from the App or Google Play Stores
- Contacting the GIB® Helpline on 0800 100 442
- Or from most GIB® stockists

2.1 GIB® SYSTEM BROCHURES



GIB EzyBrace® Systems

The GIB EzyBrace® Systems literature provides a guide to wall bracing of buildings constructed in accordance with NZS 3604:2011.



GIB Noise Control® Systems

GIB Noise Control® Systems provide the detail necessary to specify and install elements that will deliver noise control solutions for intertenancy and sub intertenancy requirements.



GIB Aqualine® Wet Area Systems

GIB Aqualine® with its water resistant core containing special polymers helps protect against damage to linings caused by moisture ingress.

The GIB Aqualine® Wet Area Systems literature provides full specification and installation details.



GIB® Fire Systems

GIB® Fire Rated Systems literature has been compiled to make it easy to specify passive fire protection systems that will form part of a complete fire design.

KDC - Approved Building Consent Document - BC210441 - Pg 268 of 512 - 30/08/2021 ComplyNZ

KDC Approved Building Consent Document - BC210441 - Pg 269 of 512 - 30/08/2021 - ComplyNZ



GIB® Tough Systems

GIB® Tough Systems provides information on reducing the effects of impact damage to walls.



GIB® X-Block® Radiation Shielding Systems

GIB® X-Block® is a specialist plasterboard and jointing system to provide protection from X-ray radiation in medical facilities, dental clinics and veterinary practices.

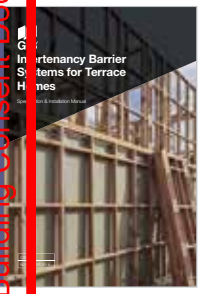

GIB® Intertenancy Barrier Systems

Intended for multi-unit residential homes designed within the scope of NZS3604:2011, the GIB® Intertenancy Barrier System for Terrace Homes provides peace of mind, delivering fire, noise and security performance.



GIB® Reverberation Control Systems

GIB® Reverbration Control Systems specifically address spaces with hard reflective surfaces, by absorbing sound.



GIB® Rondo® Systems

GIB® Rondo® Metal Batten Systems are a simple way to ensure that you get a straight and true ceiling every time.

KDC - Approved Building Consent Document - BC210441 - Pg 270 of 512 - 30/08/2021 - ComplyNZ

1.2 GIB® PLASTERBOARD RANGE

TE/TE – Both edges tapered. TE/SE – 1 tapered, 1 square edge.

Shaded box indicates availability

GIB® Standard

GIB® Standard is an economical lining material available in 10mm and 13mm thicknesses.

GIB Wideline® – 1350mm wide GIB® Standard is ideal for horizontal fixing for wall heights above 2.4m



	Thickness (mm)	Sheet Width (mm)	2400	2700	3000	3300	3600	4200	4800	6000	Max. kg/m²
TE/TE	10	1200	■	■	■	■	■	■	■	■	7.0
TE/TE	13	1200	■	■	■	■	■	■	■	■	9.0
TE/SE	10	1200	■		■		■	■	■	■	7.0
GIB Wideline® TE/SE	10	1350					■		■	■	7.0
GIB Wideline® TE/SE	13	1350							■		9.0
GIB® Patch Board	10	1200 x 590									7.0

GIB Braceline® / GIB Noiseline®

GIB Braceline® / GIB Noiseline® is a dual purpose board that provides high level bracing performance when used in GIB® Bracing Systems and helps reduce noise transmission through walls and ceilings. Refer to GIB Noise Control® Systems literature for noise control installation requirements.



	Thickness (mm)	Sheet Width (mm)	2400	2700	3000	3300	3600	4200	4800	6000	Max. kg/m²
TE/TE	10	1200	■	■	■		■		■		9.3
TE/TE	13	1200	■	■	■		■				12.5
TE/SE	10	1200							■		9.3
TE/SE	10	1350							■		9.3

GIB Aqualine®

GIB Aqualine® has a water resistant core to help prevent moisture penetration. Refer to the installation section or GIB Aqualine® Wet Area Systems literature for installation requirements.



	Thickness (mm)	Sheet Width (mm)	2400	2700	3000	3300	3600	4200	4800	6000	Max. kg/m²
TE/TE	10	1200	■	■	■		■				8.0
TE/TE	13	1200	■	■	■		■				11.0
TE/SE	10	1200							■		8.0
TE/SE	10	1350					■				8.0

GIB Ultraline®

GIB Ultraline® features a modified core for enhanced density and rigidity. Its Pearlcoat coated paper provides an enhanced surface appearance for high visibility areas.



	Thickness (mm)	Sheet Width (mm)	2400	2700	3000	3300	3600	4200	4800	6000	Max. kg/m²
TE/TE	10	1200					■		■	■	7.5
TE/TE	13	1200			■		■		■	■	9.1

GIB Fyreline®

GIB Fyreline® has a high density modified core which resists exposure to fire longer than standard plasterboard. Refer to GIB® Fire Rated Systems literature for installation requirements.



	Thickness (mm)	Sheet Width (mm)	2400	2700	3000	3300	3600	4200	4800	6000	Max. kg/m²
TE/TE	10	1200	■	■	■		■				7.0
TE/TE	13	1200	■	■	■	■	■				11.0
TE/TE	16	1200	■	■	■						15.3
TE/TE	19	1200	■		■						16.9

KDC - Approved Building Consent Document - BC210441 - Pg 271 of 512 - 30/03/2021 - Comply NZ

GIB® Toughline®

GIB® Toughline® is a high density, fibreglass mesh embedded plasterboard for added resistance to impact damage. Refer to GIB® Tough Systems literature for installation requirements.



	Thickness (mm)	Sheet Width (mm)	2400	2700	3000	3300	3600	4200	4800	6000	Max. kg/m²
TE/TE	13	1200	■	■	■		■				11.7

GIB® Toughline® Aqua

GIB® Toughline® Aqua is a multi-performance plasterboard with multiple attributes including noise attenuation, impact, water, fire and bracing resistance. See the appropriate system literature for installation requirements.



	Thickness (mm)	Sheet Width (mm)	2400	2700	3000	3300	3600	4200	4800	6000	Max. kg/m²
TE/TE	13	1200	■	■	■						11.4

GIB® Barrierline®

GIB® Barrierline® plasterboard is a key component in the GIB® Intertenancy Barrier system. Refer to GIB® Intertenancy Barrier or GIB® Noise Control Systems literature for installation requirements.

	Thickness (mm)	Sheet Width (mm)	2400	2700	3000	3300	3600	4200	4800	6000	Max. kg/m²
SE/SE	25	600			■						20.2

GIB® X-Block®

GIB® X-Block® plasterboard provides protection from X-ray radiation. Refer to GIB X-Block® Systems literature for installation requirements.

	Thickness (mm)	Sheet Width (mm)	2400	2700	3000	3300	3600	4200	4800	6000	Max. kg/m²
TE/TE	13	1200	■		■						18.3

GIB® Quietline®

GIB® Quietline® plasterboard is perforated producing unique patterns to absorb and reflect sound. Refer to GIB® Reverberation Control Systems literature for installation requirements.

	Thickness (mm)	Sheet Width (mm)	2400	2700	3000	3300	3600	4200	4800	6000	Max. kg/m²
TE/TE	13	1200	■								8.3

GIB® Plasterboard Sheet Coverage

Sheet width	1200	1200	1200	1200	1200	1200	1200	1200	1350	1350	1350
Sheet length	2400	2700	3000	3300	3600	4200	4800	6000	3600	4800	6000
Sheet area m²	2.88	3.24	3.60	3.96	4.32	5.04	5.76	7.20	4.86	6.48	8.10

KDC - Approved Building Consent Document - BC210441 - Pg 272 of 512 - 30/08/2021 - ComplyNZ

2.3 BOARD SUBSTITUTION OPTIONS

With the wide range of plasterboard types there are occasionally some overlaps in functionality.

For situations not covered below contact the GIB® Helpline on 0800 100 442.

10mm Substitution Options

10mm GIB® Standard can be replaced with:	10mm GIB Braceline® / GIB Noiseline® 10mm GIB Fyreline® 10mm GIB Ultraline® 10mm GIB Aqualine®
10mm GIB Fyreline® can be replaced with:	10mm GIB Braceline® / GIB Noiseline® 10mm GIB Ultraline® 10mm GIB Aqualine® 13mm GIB® Standard
10mm GIB Braceline® / GIB Noiseline® can be replaced with:	10mm GIB Aqualine® (see Note 1 below) 13mm or thicker GIB Fyreline® (see Notes 1 & 2 below)

13mm Substitution Options

13mm GIB® Standard can be replaced with:	13mm GIB Braceline® / GIB Noiseline® 13mm GIB Fyreline® 13mm GIB Ultraline® 13mm GIB Aqualine® 13mm GIB Toughline® 13mm GIB Toughline® Aqua
13mm GIB Fyreline® can be replaced with:	13mm GIB Braceline® / GIB Noiseline® 13mm GIB Aqualine® 13mm GIB Toughline® 13mm GIB Toughline® Aqua (See Note 2 below)
13mm GIB Braceline® / GIB Noiseline® can be replaced with:	13mm GIB Aqualine® (see Notes 1 & 3 below) 13mm or thicker GIB Fyreline® (see Notes 1, 2 & 3 below) 13mm GIB Toughline® (see Note 3 below) 13mm GIB Toughline® Aqua (see Note 3 below)

Note 1: The bracing element must be 900mm or greater in length. Fasteners to be at 100mm centres to the perimeter of the bracing element. Corner bracing fastener pattern applies. Hold downs required.

Note 2: Fastener type and length must be as specified for the relevant fire rated system.

Note 3: The bracing performance will be met but the noise control rating will be reduced.

KDC - Approved Building Consent Document - BC210441 - Pg 273 of 512 - 30/08/2021 - ComplyNZ

1.4 GIB® FASTENERS

GIB® Grabber® Screws	Size	Quantities		
Plasterboard to Timber – High Thread				
Loose	25mm x 6g	200	1000	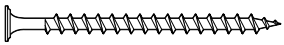
	32mm x 6g	200	1000	
	41mm x 6g	200	1000	
	51mm x 7g	100		
	57mm x 7g	100		
Collated	25mm x 6g	1000		
	32mm x 6g	1000		
	41mm x 6g	1000		
	51mm x 7g	800		
Plasterboard to Steel – Fine Thread, Self Tapping				
Loose	25mm x 6g	200	1000	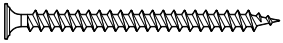
	32mm x 6g	200	1000	
	41mm x 6g	200	1000	
	51mm x 7g	100		
	63mm x 8g	100		
	76mm x 8g	100		
Collated	25mm x 6g	1000		
	32mm x 6g	1000		
	41mm x 6g	1000		
Plasterboard to Timber/Steel GIB® Grabber® Dual Thread				
Collated	32mm x 7g	1000		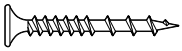
Metal to Timber – Wafer Head, Self Tapping				
Loose	32mm x 8g	200	1000	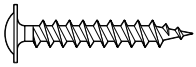
Metal to Metal – Pancake Head, Drill Tip				
Loose	13mm x 8g	500		

GIB® Fastenings coverage	
Screws	Approx. 800 per 100m² plasterboard

KDC - Approved Building Consent Document - BC210441 - Pg 274 of 512 - 30/08/2021 - ComplyNZ

5.5 GIB® RONDO® METAL BATTEN CEILING SYSTEM

GIB® Rondo® Metal Batten Systems* provide a flat, stable ceiling substrate.

Vertically aligned components are compatible.

The long clips 313 and 394 will provide approx. 100mm additional drop below ceiling framing.

GIB® RONDO® 310	308 SYSTEM	129 SYSTEM
310 Batten 3.6m 4.8m 6.0m 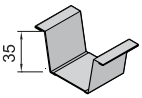	**308 Batten** 3.6m 4.8m 6.0m 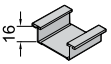	**129 Batten** 3.6m 4.8m 6.0m 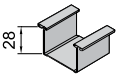
311D Clip 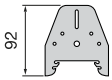	**226 Clip** 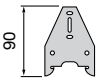	
313 Long Clip 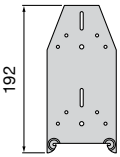	**394 Long Clip** 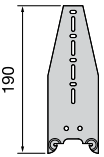	
A311 GIB Quiet Clip® 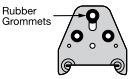	**STWC Acoustic Clip (ST001)** Resilient mount Direct fix to wall or ceiling Accepts 129 or 308 batten 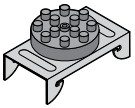	
312 Jointer 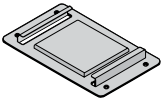	**138 Jointer** 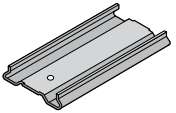	
340 Perimeter Channel 3.6m 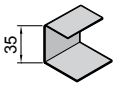	**142 Perimeter Channel** 3.0m 	**140 Perimeter Channel** 3.0m 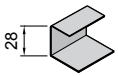
NZ18 Perimeter Angle 3.6m Can also be used for internal corners in tiled shower situations 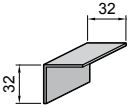		**GIBFix® Angle** 2.4m 2.7m 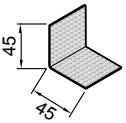

*Note: GIB® Rondo® components are referred to elsewhere throughout this publication by product numbers rather than including the full GIB® Rondo® name e.g. GIB® Rondo® 310 Batten referred to as 310 batten.

KDC Approved Building Consent Document - BC210441 - Pg 275 of 512 - 30/08/2021 - ComplyNZ

SUSPENDED CEILING ACCESSORIES

547 Clip
Fix vertically.
5mm galv. rod (121) is fitted by squeezing the two lugs of the 547 clip. Easily adjustable for height

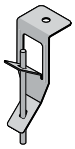

BETAFIX Clip
For direct fixing to concrete walls or ceilings. Approx 25mm adjustment for height in 5mm increments
Accepts 129 or 308 Batten



534 Clip
5mm galv. rod (121) is fitted by squeezing the two lugs of the 534 clip. Easily adjustable for height

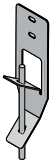

166 Clip
Direct horizontal fixing to timber or steel framing
Accepts 127 or 128 TCR



121 Rod
3.0m
5mm galv. rod



STSU Clip
Ceiling resilient mount
Fits into 127 or 128 TCR.
Accepts ether 129 or 308 battens

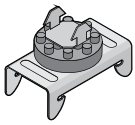

2534 Clip
Friction fitted to 121 rod
Connects to TCR



167 Clip
Side mount clip - low profile alternative for 2534 clip
Connects 127 TCR to 5mm rod
Provides height adjustment

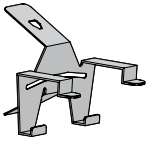

127 TCR
3.0m
4.0m
128 TCR
14923 4.8m
Top Cross Rail (TCR) Also called a strongback. Clips to 2534 clip

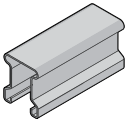

129 Clip
Clicks into TCR at spacings to suit the ceiling lining, ie. 450mm for 10mm plasterboard and 600mm for 13mm plasterboard
Connects to 308 or 129 batten



A239 Clip - clip with 100mm Rod
A239 Clip - clip with 180mm Rod
237 Clip - 100 or 180mm bolt length (incl 30mm anchor)
For direct fixing to concrete walls or ceilings.
Accepts 129 or 308 Batten 239 excl bolt, 237 excl bolt and threaded hole

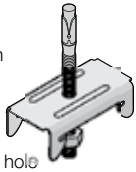

MISCELLANEOUS COMPONENTRY

BMCL Clip
Provides plasterboard fixing to structural steel framing in conjunction with 140 Perimeter channel

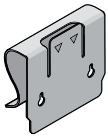

GIB RAIL®
3.0m
Fix directly to studs as per GIB® Noise control systems literature

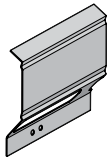

*Note: GIB® Rondo® components are referred to elsewhere throughout this publication by product numbers rather than including the full GIB® Rondo® name e.g. GIB® Rondo® 310 Batten referred to as 310 batten.

KDC - Approved Building Consent Document - BC210441 - Pg 276 of 512 - 30/08/2021 - ComplyNZ

3.6 GIB® ADHESIVES AND SEALANTS

GIB Fix® All-Bond

Solvent based adhesive suitable for most surfaces except polystyrene (Minimum application temperature is 5°C).



375ml Cartridge
600ml Sausage

GIB Fix One®

Acrylic based adhesive with an ultra low VOC content. Compatible with timber/steel framing (Minimum application temperature is 10°C).



375ml Cartridge
600ml Sausage
4 litre Pail

GIB Soundseal®

Water based, highly flexible acoustic sealant for use in GIB Noise Control® Systems. Paintable



375ml Cartridge
600ml Sausage

GIB® Gapfiller

Multi purpose acrylic gapfiller with an ultra low VOC content. Paintable



300ml Cartridge

GIB® Adhesive Coverage	
375ml cartridge	17m² plasterboard
600ml sausage	28m² plasterboard
4 litre pail	170m² plasterboard

GIB Soundseal® Coverage		
Bead Size	**375ml Cartridge**	**600ml Sausage**
10mm x 10mm	3.75 lineal metres	6.0 lineal metres
10mm x 5mm	7.5 lineal metres	12.0 lineal metres

3.7 GIB-COVE®

All profiles available in 3.6m lengths.

Mezzo

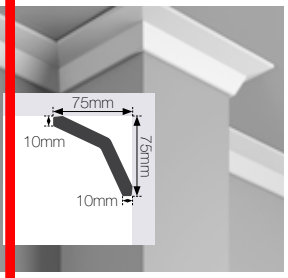

Tenor

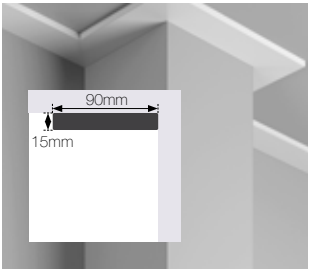

Basso

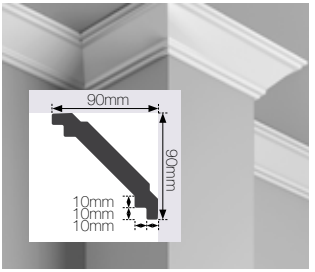

Alto

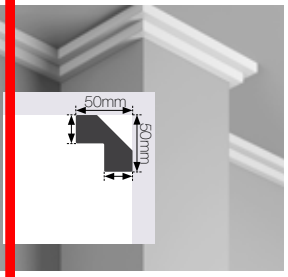

Classic 90mm, 75mm and 55mm

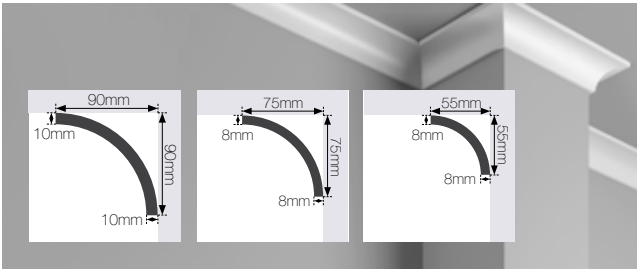

KDC - Approved Building Consent Document - BC210441 - Pg 277 of 512 - 30/08/2021 - ComplyNZ

1.8 GIB® COMPOUNDS

There are numerous options for compounds. These fall into two general categories, setting compounds and air drying compounds.

Air Drying Compounds

- Ready to use materials (except GIB® U-Mix)
- Easy to sand producing a smooth finish
- Harden as they dry. Drying can be slow if applied thick and in poor drying conditions

Setting Compounds

- Harden and set by chemical reaction with water
- Supplied in powder form and mixed with clean water to the correct consistency
- The working time is controlled during manufacture so that compound sets and goes hard after a specified time
- Must not be mixed with other compounds
- Must not be applied over air drying materials

Setting Compounds

GIB Tradeset®



- Ideal for bedding tape
- Machine tool compatible
- Variety of working times available

		Base Coat	✓
		Second Coat	✓
		Finishing Coat	✗
		Suitable for GIB-Cove®	✗
Product Size	5kg, 20kg Bag	Compound Type	Setting
Working/Set Times (mins)	20, 45, 90 & 150*	Scraping	Easy

GIB MaxSet®



- Mechanically strong
- Strong tape adhesion
- Sets hard for faster jointing
- Maximum coverage with low shrinkage

		Base Coat	✓
		Second Coat	✓
		Finishing Coat	✗
		Suitable for GIB-Cove®	✗
Product Size	20kg Bag	Compound Type	Setting
Working/Set Times (mins)	90	Scraping	Only while 'green'

GIB Lite Blue®



- Easy to sand
- Machine and hand tool application
- Low shrinkage

		Base Coat	✗
		Second Coat	✓
		Finishing Coat	✗
		Suitable for GIB-Cove®	✗
Product Size	17.5kg Bag	Compound Type	Setting
Working/Set Times (mins)	90	Sanding	Easy

*GIB Tradeset® 150 is only available in 20kg bags

KDC - Approved Building Consent Document - BC210441 - Pg 278 of 512 - 30/08/2021 - ComplyNZ

Air Drying Compounds

GIB Trade Finish® Heavy Weight



- Heavy weight, suitable for machine sanding
- Cool weather application
- Super slick to trowel or apply with box
- Full body trowelling
- Ideal for filling or covering uneven surfaces

		Base Coat	✕
		Second Coat	✕
		Finishing Coat	✓
		Suitable for GIB-Cove®	✕
Product Size	15L Pail	Compound Type	Air Drying Ready Mix
Working/Set Times (mins)	-	Sanding	Hard

GIB Trade Finish® Multi



- Medium weight multi purpose
- Super slick to trowel or apply with box
- Yellow tint enables easy identification

		Base Coat	✓
		Second Coat	✓
		Finishing Coat	✓
		Suitable for GIB-Cove®	✕
Product Size	10L, 15L Pail & 14L Carton	Compound Type	Air Drying Ready Mix
Working/Set Times (mins)	-	Sanding	Modertate

GIB Trade Finish® Lite



- Easy sanding light weight compound
- Super slick to trowel or apply with box
- Yellow tint enables easy top coat identification

		Base Coat	✓
		Second Coat	✓
		Finishing Coat	✓
		Suitable for GIB-Cove®	✕
Product Size	15L Pail & 14L Carton	Compound Type	Air Drying Ready Mix
Working/Set Times (mins)	-	Sanding	Easy

GIB Trade Finish® Extra Lite



- Very easy sanding light weight compound
- Super slick to trowel or apply with box
- Yellow tint enables easy top coat identification
- Warm weather application

		Base Coat	✓
		Second Coat	✓
		Finishing Coat	✓
		Suitable for GIB-Cove®	✕
Product Size	15L Pail & 14L Carton	Compound Type	Air Drying Ready Mix
Working/Set Times (mins)	-	Sanding	Very Easy

GIB® U-Mix



- Economical finishing compound
- Mix and adjust viscosity as required on site
- Good open time
- Machine tool compatible

		Base Coat	✕
		Second Coat	✕
		Finishing Coat	✓
		Suitable for GIB-Cove®	✕
Product Size	20kg Bag	Compound Type	Air Drying Ready Mix
Working/Set Times (mins)	-	Sanding	Easy

GIB Plus 4®



- Suitable for all three jointing coats
- Ideal for skim coating
- Excellent adhesion to a variety of substrates

		Base Coat	✓
		Second Coat	✓
		Finishing Coat	✓
		Suitable for GIB-Cove®	✕
Product Size	4L, 10L & 15L Pails	Compound Type	Air Drying Ready Mix
Working/Set Times (mins)	-	Sanding	Easy

Note: For guidance on approximate drying times for air drying compounds refer to p. 82.

KDC - Approved Building Consent Document - BC210441 - Pg 279 of 512 - 30/08/2021 - ComplyNZ

Repair Compounds

GIB® RediFilla™



- Repair scratches, dents, nail heads and cracks
- Sandable, paintable, low shrinkage,good adhesion
- Ready to use

		Base Coat	✓
		Second Coat	✓
		Finishing Coat	✓
		Suitable for GIB-Cove®	✗
Product Size	2L & 4L Pails	Compound Type	Air Drying Ready Mix
Working/Set Times (mins)	-	Sanding	Easy

GIB® TradeFilla™



- Quickly repair and fill holes
- Paintable and doesn't need a finishing coat
- Can apply second coat after 30 minutes if required

		Base Coat	✓
		Second Coat	✓
		Finishing Coat	✓
		Suitable for GIB-Cove®	✗
Product Size	5kg Bag	Compound Type	Setting
Working/Set Times (mins)	10	Sanding & Scraping	Moderate

Cove Bond

GIB-Cove® Bond



- Excellent "wet tack"
- Required for back blocking
- Two setting times available

		Base Coat	✗
		Second Coat	✗
		Finishing Coat	✗
		Suitable for GIB-Cove®	✓
Product Size	5kg* & 20kg Bags	Compound Type	Setting
Working/Set Times (mins)	45 & 90	Scraping	Hard

Victor® Cornice Bond



- Specifically designed for adhering fibrous plaster products

		Base Coat	✗
		Second Coat	✗
		Finishing Coat	✗
		Suitable for GIB-Cove® / Fibrous Mouldings	✓
Product Size	20kg Bag	Compound Type	Setting
Working/Set Times (mins)	30	Scraping	Hard

Specialty Compounds

Victor® Multi Plus



- For solid plaster screeding/rendering over a masonry surface
- Long work time and gradual controlled set
- Use as a finish coat or as general purpose undercoat

		Base Coat	✓
		Second Coat	✓
		Finishing Coat	✓
		Suitable for GIB-Cove®	✗
Product Size	20kg Bag	Compound Type	Setting
Working/Set Times (mins)	90	Sanding	Polished / Not Sanded

GIB X-Block® Jointing Compound



- Eliminates the need for backing joints with lead strip
- High strength joint when used in conjunction with paper joint tape
- Can be finished with any of the GIB® finishing compounds

		Base Coat	✓
		Second Coat	✗
		Finishing Coat	✗
		Suitable for GIB-Cove®	✗
Product Size	25kg Bag	Compound Type	Setting
Working/Set Times (mins)	90	Sanding	Polished / Not Sanded

KDC - Approved Building Consent Document - BC210441 - Pg 280 of 512 - 30/08/2021 - ComplyNZ

2.9 GIB® PAPER FACED TRIMS

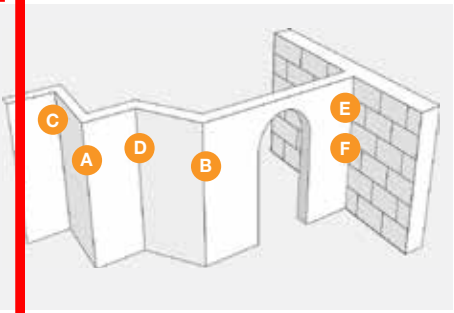

GIB® Goldline® Platinum Trims are made with a patented, high quality paper laminated to galvanised steel forms. The metal provides maximum strength and protection for the corner, while the paper face matches the plasterboard paper surface to help create a more uniform surface finish.

Ext 90° GIB® Goldline® Corner Trim G1-W

2.4m
2.7m
3.0m

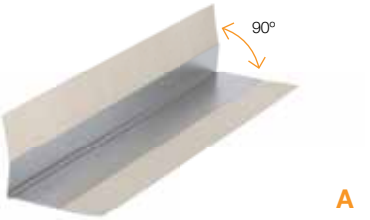

A

GIB® Goldline® Bullnose Ext 90° Corner Trim G1-B

2.4m
3.0m

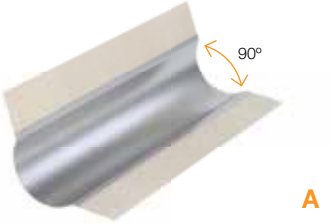

A

Ext 135° GIB® Goldline® Corner Trim G1-0

2.4m

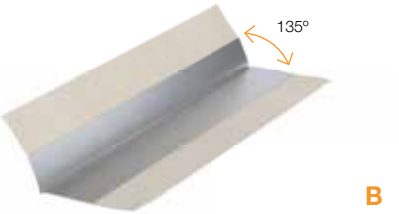

B

Int 90° GIB® Goldline® Corner Trim G2 Standard

2.4m
2.7m
3.0m



C

Int 135° GIB® Goldline® Corner Trim G2-0

2.4m



D

GIB® Goldline® Reveal GR

for 10mm GIB® plasterboard 3.0m
for 13mm GIB® plasterboard 3.0m



E

GIB® Goldline® L-Trim G4

for 10mm GIB® plasterboard 3.0m
for 13mm GIB® plasterboard 3.0m



F

GIB® Goldline® L-Trim / GR Reveal as Control Joint



KDC - Approved Building Consent Document - BC210441 - Pg 281 of 512 - 30/08/2021 - ComplyNZ

GIB® METAL TRIMS

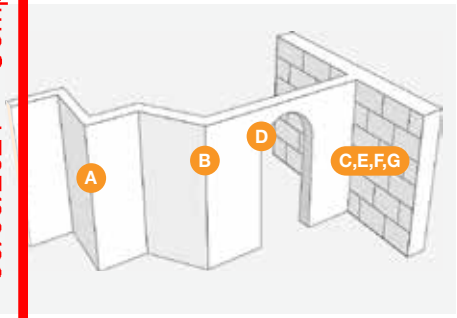

GIB® Metal Trims provide a clean defined edge on either straight or curved details. The perforated legs provide a strong key for compounds and the sharply defined nib provides a knock resistant corner.

Ext 90º GIB® Slim Angle — P01

External 90 degree perforated corner trim

2.4m
2.7m
3.0m

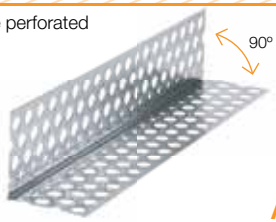

A

Ext 135º GIB® Slim Angle — P01A

External 135 degree perforated corner trim

2.4m
2.7m
3.0m

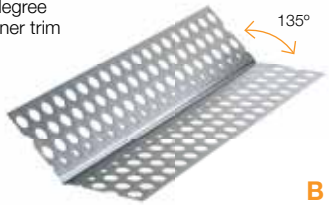

B

Rondo® Stopping Angles — P25/26/27

L-trim for stopped end trim

P25–10mm–3.0m
P26–13mm–3.0m
P27–16mm–3.0m



C

GIB® Slim Arch Bead — P10

Perforated curvable corner edge trim

2.4m
3.0m



D

Rondo® Stopping Beads — P12/13

End cap bead – stopped

P12–10mm–2.4m
3.0m
P13–13mm–2.4m
3.0m



E

Rondo® Shadowline Stopping Bead — P50

Reveal or Z-trim

P50–10mm–3.0m



F

Rondo® Casing Bead — P05/7

End cap bead – unstopped

P05–10mm–2.4m
P07–13mm–3.0m

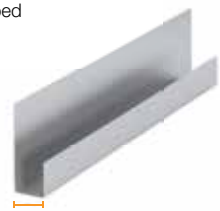

G

Rondo® Control Joint — P35

P35 Control Joint – White

3.0m



KDC - Approved Building Consent Document - BC210441 - Pg 282 of 512 - 30/08/2021 - ComplyNZ

GIB® ADDITIONAL COMPONENTS

GIB® Paper Joint Tape

A critical element to reinforce joints. Spark perforated to aid drying and adhesion. Buffed underside to aid bonding with compound

75m roll, 52mm wide

150m roll, 52mm wide



GIB RocTape®

Similar to GIB® Paper Joint Tape and can be installed using hand tools or mechanical tools. Suitable for flat joints only

75m roll, 50mm wide



GIB® UltraFlex® No Coat

High Impact Flexible Composite Trim suitable for all off angles interior or exterior

3.5"–30m roll, 82mm wide

4.0"–30m roll, 112mm wide



GIB® Levelline™ Trim

A foldable composite trim with a paper face to match the paper face of GIB® plasterboard for a more uniform finish on corners

30m roll, 70mm wide



GIB® Plastic W-Profile Control Joint

3.0m



GIB HandiBrac®

Required in specific bracing elements

Sold in pairs complete with Tek screws and screw-bolt. Must be installed as per GIB EzyBrace® Systems literature



KDC - Approved Building Consent Document - BC210441 - Pg 283 of 512 - 30/08/2021 - ComplyNZ

3.0 PRE – INSTALLATION

Before installation of GIB® products or systems there are some points that need to be considered. In order that products and systems perform as stated, it is important for designers and installers to be familiar with these points.

Achieving a satisfactory finished wall or ceiling surface is the result of teamwork involving several trades and disciplines.

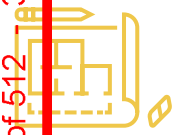

Designers
- Convert the client's brief into working drawings
- Comply with Building Code requirements and ensure that all relevant standards are applied
- Determine final decoration
- Determine lighting design to achieve functional requirements and optimised quality of finish
- Determine the level of finish required
- Determine the location of control joints
- Provide sufficient detail on the drawings for trades people to interpret accurately



Builders
- Provide project management and supervision to ensure that the site is ready for each incoming trade
- Co-ordinate the sub-trades
- Site management to provide suitable dry storage for plasterboard products



Carpenters
- Ensure framing is erected plumb, straight, level and flat
- Ensure that ceiling battens are all running in the same direction within rooms
- Provide an acceptable substrate for the plasterboard installer

It is the responsibility of each contractor to carry out their part of the process in a manner that allows following trades to do their part effectively.

There is no place in the industry for the phrase "The stopper will fix it".

All trades involved in the process have to take full responsibility for the quality of their workmanship.



Plasterboard Installers
- Check the substrate prior to installing plasterboard
- Ensure that remedial work is carried out before any plasterboard is installed
- Check with builder that the pre-lining inspection has taken place and the timber moisture content does not exceed 18%
- Install plasterboard to manufacturer's instructions
- Provide an acceptable substrate for the plasterboard stopper



Stoppers
- Check the substrate prior to commencing finishing work
- Ensure that remedial work is carried out before finishing
- Carry out stopping work in accordance with manufacturer's instructions and the requirements of AS/NZS 2589:2017
- Provide an acceptable substrate for the painter



Painters
- Check the substrate prior to painting.
- Ensure that remedial work is carried out before any painting commences
- Apply paint according to the manufacturer's instructions and to best trade practice

1.1 DELIVERED TO SITE SERVICES

At Winstone Wallboards we are always striving to ensure that every site delivery is as smooth, safe and efficient as possible. Make sure your site is ready for your delivery – first time.

Note: GIB® Delivered to Site (DTS) services not available to all areas.

What is a 'Plasterboard Ready' site?

A plasterboard ready site is one that has clear and unobstructed access. Hazards (e.g. building waste, scaffolding) need to be removed before the plasterboard is delivered to site.

The floor area where the plasterboard is to be stored must be clean, clear, dry and free of obstacles. This means the roof is installed and the building is weatherproof, i.e. closed in.

What if the site is not plasterboard ready?

Will result in delivery delays and redelivery charges (i.e. If risk is too high, delivery of plasterboard will not go ahead).

Increases the potential risk of injury and product damage.

Extra delivery charges

DTS prices include the costs for a Standard Delivery. Your delivery may incur extra charges for a Specialist Delivery if one or more of the following apply:

- Plasterboard is to be carried more than 20 metres
- Multi-storey pass up
- Plasterboard split into more than two areas.
- Foundations higher than 400mm
- Use of long (23m) or extra long reach hiab (32m)
- Bulk plasterboard delivery to commercial sites.
- Plasterboard to be carried from door/window where hiab has dropped to another location
- Narrow driveway, height + weight restriction
- Unstable ground (mud, loose dirt) prevents truck/hiab from getting within 20 metres of nearest point of cover
- Driver has to be on site for more than 2 hours
- Poor weather conditions prevent the safe delivery of the plasterboard (eg. heavy rain)

Do you need a site check?
A site check requires 2 full working days' notice prior to delivery date. Order must be received by Winstone Wallboards before site check can be organised. The site check will be booked in within 48 hours of delivery.

If in doubt, book a free site check so we can let you know if your site is Plasterboard Ready, and advise on the most efficient delivery service for you.

You must book a site check for:
- Commercial sites
- Orders over 10 tonne (i.e. approximately two standard house lots or 1250m^2)
- Hill (steep) sites

KDC - Approved Building Consent Document - BC210441 - Pg 284 of 512 - 30/08/2021 - ComplyNZ

KDC - Approved Building Consent Document - BC210441 - Pg 285 of 512 - 30/08/2021 - CopyNZ

How you can help

Make sure the site is plasterboard ready.

Ensure the site contact is contactable by phone at least 1 hour before delivery (e.g. for a 7am delivery, site contact will need to be able to take a call from 6am).

Provide all required information when placing your order so we can despatch the correct delivery vehicle, including:

- Site address
- Site contact and number
- Site access description (e.g. from truck to building, type of building – single or multi-level)
- Delivery requirements
- Specific safety equipment for the site (if applicable)

If in doubt, request a free site inspection to avoid potential delivery delays and extra re-delivery charges.

For more information on getting your site plasterboard ready, contact your local GIB® representative or call the GIB® Helpline on 0800 100 442.

Is your site 'Plasterboard Ready'? Check the examples below.









KDC - Approved Building Consent Document - BC210441 - Pg 286 of 512 - 30/08/2021 - ComplyNZ

2.2 PRE – INSTALLATION CHECKLIST

Using a checklist can help with inter-trade co-operation.

Site Address	

Builder	
Fixer	
Stopper	
Painter	

Fixer

Before any fixing commences...	Y/N	Checked by	Date
Has the framing surface been checked for flatness? i.e. no protruding nogs, lintels etc.?			
Is the moisture content acceptable i.e. 18% or less			
Are grooved jambs set up correctly to allow 1–1.5mm clearance for sheet edge?			
Are all ceiling battens running in same direction within room spaces?			
Are there any factors that could affect the fixing of the board? Please note here:			
Substrate accepted by fixer			

Name	Signed		Date

Stopper

Before any stopping commences...	Y/N	Checked by	Date
Have the number and length of joints been kept to a minimum?			
Has the lineal meterage of joints been kept to a minimum?			
Has the board been fixed horizontally wherever practical?			
Correct fasteners used?			
Fastenings (nails or screws) have not been overdriven?			
No joints above or below the edges of windows or doors?			
No fastenings to sheet centres on walls? (Not applicable to Fire Rated systems or tiled surfaces)			
Butt joints in ceiling back blocked where required?			
Correct size and spacing of glue daubs? (If viewed during installation)			
Only GIB® tape used on stopping joints			
Are there any factors that could affect the stopping of the board? Please note here:			
Substrate accepted by stopper			

Name	Signed	Date

Painter

Before any painting commences...	Y/N	Checked by	Date
Surface free of visible trowel marks or defects			
Are there any factors that could affect the painting of the board? Please note here:			
Substrate accepted by fixer			

Name	Signed	Date

KDC Approved Building Consent Document - BC210441 - Pg 287 of 512 - 30/08/2021 - ComplyNZ

3.3 SITE CONDITIONS

It is important to consider the impact of damp and cold site conditions during the construction process on the finish quality once the building has been occupied and reaches equilibrium.

- Maintain a minimum temperature (interior) of 10°C during the plasterboard fixing process and a controlled temperature of above 10°C for 24 hours before, during and after the joint stopping process. With concrete slab construction, provide sufficient ventilation to minimise the build-up of internal humidity (which increase the risk of sagging of plasterboard as well as delaying the project due to prolonged drying/curing of joint compounds).

Failure to observe these requirements may result in framing and plasterboard surface defects.

3.4 STACKING, STORAGE AND HANDLING

GIB® plasterboard is a finishing product and needs to be handled as such. For safety reasons, plasterboard sheets should be stacked horizontally wherever possible, taking the following considerations into account:

- To avoid sheet distortion or damage, sheets must be neatly stacked on a clean surface not susceptible to moisture
- Sheets stacked flat on a concrete floor must be separated from the floor surface by a moisture barrier (e.g. polythene sheet) or placed on bearers (min. 75 x 50)
- Consider floor loadings as GIB® plasterboard weighs in the range of 700–800kg/m^3
- Stacks should be limited to 300mm high on suspended floors to minimise the risk of structural damage through point loading

Due to the complexity of a construction site and the restricted site conditions, it is not always possible to horizontally stack plasterboard on a flat surface. Plasterboard can be stored vertically as a last option, taking the following considerations into account:

- For safety reasons and to prevent sheets from falling, vertical supports/restraints must always be used when plasterboard is vertically stacked
- The maximum number of 10mm and 13mm sheets that can be vertically stacked is 20 against timber framing. This reduces to 13 sheets maximum for 16mm and 19mm GIB Fyreline®
- To reduce the risk of toppling, the first sheet must be placed 150–180mm from the bottom plate
- Winstone Wallboards does not recommend stacking sheets vertically on the short edge

When handling plasterboard sheets, lift sheets from the stack rather than dragging them. This also reduces the risk of face paper damage. Carry sheets on edge. This is easier than carrying them on the flat and sheets are less likely to crack or break.

Horizontal Storage

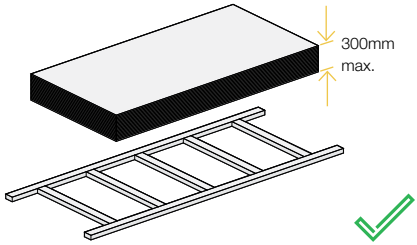

Vertical Storage

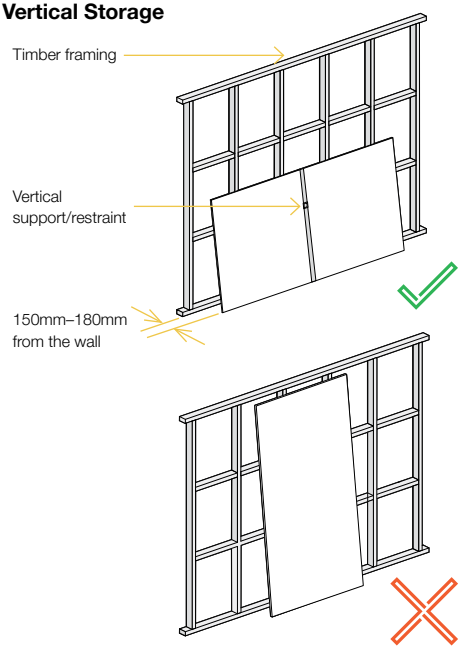

KDC - Approved Building Consent Document - BC210441 - Pg 288 of 512 - 30/08/2021 - ComplyNZ

6.5 PROTECTION FROM WEATHER

Do not install GIB® plasterboard in any situation where external claddings are not in place or which is not totally protected from the elements. If plasterboard is installed under such conditions it greatly increases the risk of surface defects such as cracked or peaked joints and fastener pops.

GIB® products must be kept dry preferably by being stored inside a building and under cover. Where it is necessary to store GIB® plasterboard outside, it must be stacked off the ground and be fully protected from the weather.

6.6 ORDERING AND DELIVERY

At the time of ordering, consider specifying which sheet sizes are designated for walls and those for ceilings so that they can be placed in separate stacks.

With the extensive GIB® product range it is impossible for building merchants to stock all types and sizes of product. Winstone Wallboards has a strong customer service promise to back up our merchant customers. Planning ahead will mean you can get the exact products you require.

Deliver GIB® plasterboard to site immediately prior to installation to reduce the risk of damage.

6.7 TIMBER MOISTURE CONTENT

The moisture content of timber at the time of fixing plasterboard must be 18% or less.

Fixing plasterboard to timber with moisture content exceeding 18% will increase the risk of surface defects such as peaked or cracked joints and popped fasteners.

Winstone Wallboards strongly recommends builders invest in the use of moisture meters to check timber framing is suitable for plasterboard linings prior to installation.

Winstone Wallboards recommends a lower moisture content (8% to 18%) if air conditioning, heat pumps or central heating are to be installed.

The objective should be to install linings to timber framing with a moisture content as close as possible to the final equilibrium level of the complete and occupied building.

Winstone Wallboards recommends:

- The use of GIB® Rondo® Metal Ceiling Battens
- The use of Kiln Dried Machine Stress Graded (KDMG) timber for all wall, roof and mid-floor framing members

Note: Mixing KDMG framing with non KD timber can cause undue substrate movement and is not recommended.

6.8 WASTE MINIMISATION

Ever increasing pressure is being placed on waste disposal facilities. As the construction industry is a major contributor of waste material, consideration should be given to methods of waste minimisation.

The use of longer sheets and horizontal fixing helps reduce on-site waste.

GIB® plasterboard off cuts, if separated from other waste building materials, can be readily recycled. For larger projects the waste can be diverted to compost manufacturers who grind up the GIB® plasterboard and utilise it in compost.

6.9 SITE HEALTH AND SAFETY

Construction sites can contain multiple hazards. It is important that appropriate health and safety requirements are strictly followed at all times.

Before commencing any installation work, familiarise yourself with the safety requirements of the site you are working on.

Identify any potential hazards, applying the steps in the table to the right.

Under normal conditions of use, GIB® plasterboard presents no known health hazards.

1. **Eliminate the Hazard -** Eliminate the hazard altogether if at all possible
2. **Isolate the Hazard -** Install barriers or guard rails to isolate people from the hazard
3. **Minimise the Risk of Harm -** For example, use fall restraints or provide soft landing systems to minimise the risk of harm

KDC - Approved Building Consent Document - BC210441 - Pg 289 of 512 - 30/08/2021 - ComplyNZ

Lifting Machines

Plasterboard lifting machines are recommended for ceiling sheets. These can generally be hired from a local hire centre. If a plasterboard lifter is not available, ensure that adequate labour is on hand to assist.



Lifting Techniques

Careful lifting techniques must be employed to minimise the risk of back injury.



Knives

Knives used for scoring and snapping need to be sharp to operate effectively. Extreme care needs to be taking when using any cutting implements.



Dust Masks

Dust masks complying with AS/NZS 1715 and 1716 must be worn for all sanding of stopping compounds. For more information visit business.govt.nz/worksafe.



Waste Materials

Do not dispose of waste materials or compounds into any drainage system. Most local authorities will accept gypsum waste materials in landfills. If in doubt, check with your local authority.



Vertical Restraints

For safety reasons, flat stacking of sheets is recommended wherever possible (see page 29). Plasterboard can be stored vertically as a last option and should always be restrained to prevent sheets from falling. No more than 20 sheets should be vertically stacked at any one point against a timber frame. This reduces to 13 sheets for 16mm and 19mm GIB Fyreline®. To reduce the risk of toppling, the first sheet must be placed 150–180mm from the bottom plate.



Scaffolding

Ensure that scaffolding complies with relevant safety requirements.



Safety Tags

All electrical equipment and leads must have a current and appropriate safety tag.



KDC - Approved Building Consent Document - BC210441 - Pg 290 of 512 - 30/08/2021 - ComplyNZ

2.10 REQUIRED TOOLS

Plasterboard installation requires a range of general carpentry tools

Hammer



Measuring Tape



Folding Rule



Plasterboard Knife



Hand Rasp – Surform



T Square



Straight Edge



Nail Punch



Keyhole Saw



Plasterboard Saw



Flat Lifting Bar



Drywall Screwdriver



Adhesive Gun



Tip: If using a cordless drill with clutch for fixing, take some time to adjust the clutch so that the screws do not cut through the surface of the paper.

Practise on some off-cuts and timber or in an area that will be out of normal view. Remember that old timber will be much harder than newly installed timber, so be careful when working in areas with both.

KDC - Approved Building Consent Document - BC210441 - Pg 291 of 512 - 30/08/2021 - ComplyNZ

4.0 GENERAL WALL AND CEILING INSTALLATION

This section covers the installation of GIB® plasterboard in walls and ceilings. Installation guidance is also provided for speciality systems; GIB EzyBrace® and GIB Aqualine® Wet Area Systems.

For further installation guidance including system specifications for GIB Toughline®, GIB Noiseline®, GIB Fyreline® and GIB Barrierline® refer to the appropriate system literature.

4.1 BEFORE STARTING INSTALLATION

Inspect the framing

Check that the surface is flat and that there is nothing that could affect the finished surface. For example:



Nogs not flush.

Nails not below the framing surface.



Do not simply rely on the building inspector at the pre-lining inspection but take responsibility and understand the effects of framing moisture on content and the quality of finish.

Moisture content to be 18% or less.



Nail plates or hold down ties not checked in flush with the surface insulation bulging out between studs.



These are all factors that will affect the quality of the finished surface. **The time to correct them is now.** Once fixing commences it indicates an acceptance of the substrate quality.

It is the responsibility of the framing contractor to provide a substrate that allows the plasterboard fixer to effectively install the plasterboard in accordance with the manufacturer's instructions.

Likewise it is the responsibility of the plasterboard fixer to provide a suitable surface for the plasterboard stopper to effectively carry out the stopping process.

There is no place in the industry for the phrase "The stopper will fix it".

All trades involved in the process have to take full responsibility for the quality of their workmanship.

KDC - Approved Building Consent Document - BC210441 - Pg 292 of 512 - 30/08/2021 - Comply NZ

Cutting GIB® Plasterboard

Measure the wall to determine the required sheet size. Generally cut the sheet 2mm–3mm less than the exact dimension needed.



Position the sheet with the face paper side up. Mark the sheet as required.



Firmly hold the straight edge on the line to be cut.

Cut through the face paper and into the plaster core by sliding the knife blade against the straight edge.



Break the sheet core by snapping the sheet back firmly while holding on to the sheet edge.



Turn the sheet over so that back paper is now facing up. Score the back paper to complete the cut.



KDC - Approved Building Consent Document - BC210441 - Pg 293 of 512 - 30/08/2021 - Comply NZ

4.2 GENERAL INSTALLATION TECHNIQUE

Cutting GIB® Plasterboard

For sheets requiring multiple cuts, use a handsaw to complete the short cuts before scoring and snapping the longer cut.







Mark the position of any power outlets or pipes on the face of the board.

Make hole at a corner of the marked outlet. Cut out the box as marked.



Tip: To get the saw started, drill holes at each of the corners but within the opening. In some cases the saw can simply be pushed through the sheet without the need for holes.

KDC - Approved Building Consent Document - BC210441 - Pg 294 of 512 - 30/08/2021 - ComplyNZ

4.2 GENERAL INSTALLATION TECHNIQUE

Fixing GIB® Plasterboard

Apply GIBFix® adhesive at specified centres. Apply immediately prior to fixing the GIB® plasterboard. Do not allow time for the adhesive to "skin" over.

GIBFix® adhesive daubs should be approximately 35mm in diameter and about 12mm high.

Cold temperatures (10ºC or less) will affect the curing time of adhesive. It is recommended that steps are taken to achieve 10ºC at the time of installation.



Tip: Do not place GIBFix® adhesive behind fasteners. This will increase the risk of "fastener popping" Place at least 200mm from fasteners

Fit the GIB® plasterboard in position against the framing. Press the sheet firmly against the framing to ensure a good bond with the adhesive.



Sheets must be 5–10mm from the floor. Place packers to suit OR use a flat bar to lift the sheet off the floor.

(Note that some specific fire rated systems require that the sheets are fixed hard to the floor).



Install fasteners at specified centres. Make sure that the head of the fastener is bedded just below the surface of the board.



Tip: Use an electric drywall screwgun equipped with an adjustable depth control head and Philips bit. If a screw is overdriven and the paper and/or core of the GIB® plasterboard is damaged, insert a second screw approximately 50mm from the first and then remove the first screw.

How much GIBFix® adhesive to use?

A simple method of reducing GIBFix® waste and having consistently sized daubs of adhesive is to remove the sealer cap from a sipper type drink bottle top and fit it to the nozzle of an adhesive cartridge. Press the face of the cap against the surface and apply pressure to the adhesive applicator gun. The cap will fill with adhesive and when full, pull the cap away from the surface. This will leave a daub of adhesive approximately 35mm in diameter and with a raised "peak" of about 10–12mm.

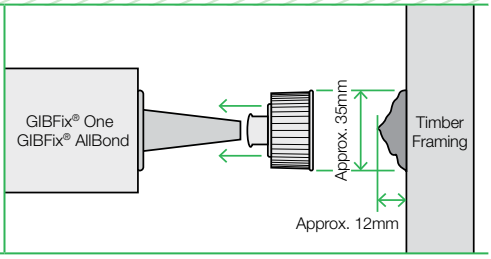

KDC - Approved Building Consent Document - BC210441 - Pg 295 of 512 - 30/08/2021 - ComplyNZ

4.2 GENERAL INSTALLATION TECHNIQUE

Joint Placement

Give careful consideration to the placement of sheet joints in walls and ceilings.

Try to minimise sheet joints by using the largest sheet size available.

Where possible place joints in situations where they are less likely to affected by critical lighting.

Vertical Fixing

Form sheet edge joints in vertically fixed walls on studs.

Shorter vertical joints (400mm or less) such as above a window or door can be made off the stud. Joints under windows can be made off the stud provided that nogs are installed to reduce the unsupported joint to 600mm or less. Alternatively the joint may be back blocked.

Horizontal Fixing

Sheet edge joints in horizontally fixed walls may be unsupported (stud centres must not exceed 600mm).

For levels of finish 3 and 4, sheet end butt joints may be made on studs. However, to reduce the risk of joint defects, it is strongly recommended that sheet end butt joints are back blocked off framing.

Around Door or Window Openings

Sheet edge joints formed at the edge of door and window openings are highly prone to cracking. To reduce the risk of cracking it is strongly recommended that sheets are cut around openings and joints are formed no closer than 200mm to the edge of the opening.

General Installation – Not recommended

Prone to cracking due to frame flexibility. Not recommended for general installations.

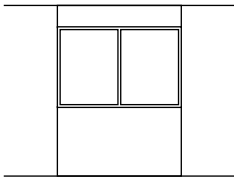

General Installation – Not recommended

Time consuming for no real benefit. Still highly prone to cracking.

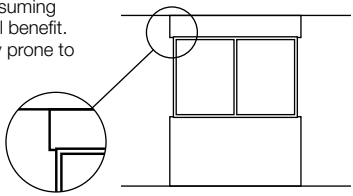

General Installation – Acceptable

This moves the joint away from problem area. Floating joint, correctly taped and stopped is less likely to crack.

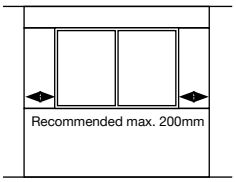

General Installation – Acceptable

Positioning the joint 200mm from the window edge will reduce the likelihood of cracking.

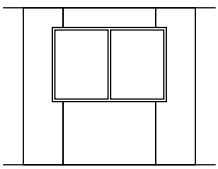

General Installation – Recommended

If the grooved jambs have been accurately installed, this is not difficult for a competent fixer. The lining on this wall will need to be fixed prior to any adjacent walls.

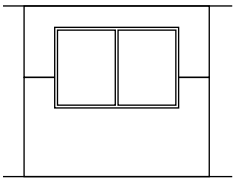

High Movement Applications

For applications prone to a high degree of movement, such as transportable homes, consideration should be given to installing a control joint at the edges of the door or window (see p. 49)

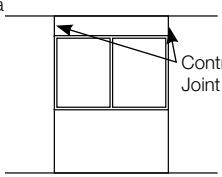

KDC - Approved Building Consent Document - BC210441 - Pg 296 of 512 - 30/08/2021 - Comply NZ

4.3 GIB® PLASTERBOARD INSTALLATION – WALLS

For installation guidance on GIB EzyBrace® and GIB Aqualine® Wet Area Systems refer to the GIB® Performance Systems section.

For all other GIB® Performance Systems refer to the relevant GIB® Systems literature.

4.3.1 Timber Frame – Horizontally Fixed

Wall Framing

- Framing dimensions, spacings and nog requirements must comply with NZS3604:2011
- Timber moisture content must not exceed 18% (see p. 30)
- Nogs to be evenly spaced with a maximum spacing of 1350mm. If staggering nogs off a centreline (Option A) it is recommended a maximum offset of 50mm–75mm
- Nogs are not required behind the horizontal joint except in shower situations and specific fire, noise or impact prone area, such as stairwells or doorways

Fasteners

- 10mm GIB® plasterboard, minimum 25mm x 6g GIB® Grabber® high thread screws*
- 13mm GIB® plasterboard, minimum 32mm x 6g GIB® Grabber® high thread screws*

Installation

- 300mm to top and bottom plates and perimeter studs
- Pairs of single fasteners to each stud where horizontal joint crosses
- Place fasteners no closer than 12mm from paper bound sheet edge or 18mm from any cut edge
- Fasteners at wall corners to be placed 50mm in from the corner in each direction
- Do not place GIBFix® adhesive at sheet edges or within 200mm of fasteners
- Place daubs of GIBFix® adhesive at 300mm centres to intermediate studs
- Sheet edges at door or window openings can be adhesive fixed unless forming part of the perimeter of a bracing element

Stopping

- Refer to the Jointing and Finishing section (p. 78)

*Some GIB® Performance Systems may require different fastener lengths and types. Refer to the applicable GIB® System literature for more information.

Timber Frame – Horizontally Fixed

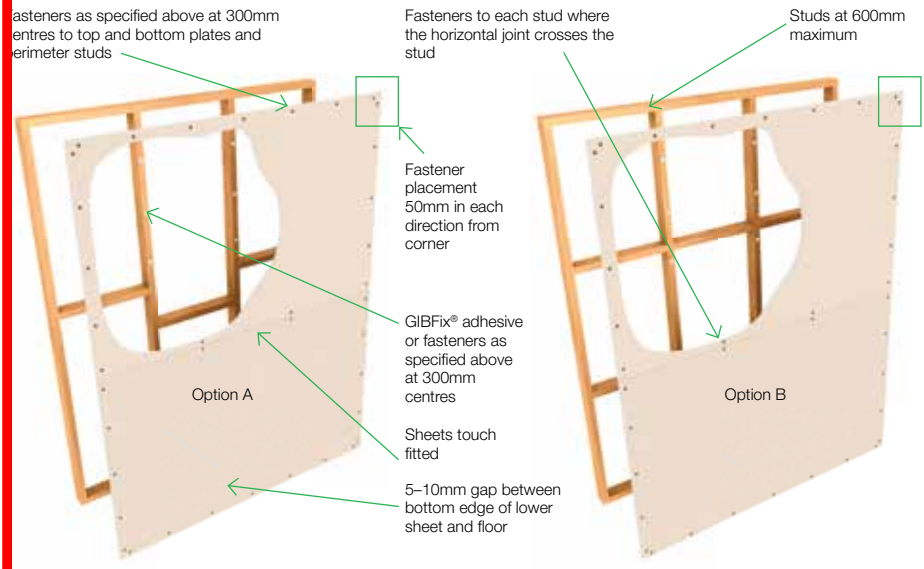

KDC - Approved Building Consent Document - BC210441 - Pg 297 of 512 - 30/08/2021 - ComplyNZ

4.3 GIB® PLASTERBOARD INSTALLATION – WALLS

For installation guidance on GIB EzyBrace® and GIB Aqualine® Wet Area Systems refer to the GIB® Performance Systems section.

For all other GIB® Performance Systems refer to the relevant GIB® systems literature.

4.3.2 Timber Frame – Vertically Fixed

Wall Framing

- Framing dimensions, spacings and nog requirements must comply with NZS3604:2011
- Timber moisture content must not exceed 18% (see p. 30)

Fasteners

- 10mm GIB® plasterboard, minimum 25mm x 6g GIB® Grabber® high thread screws*
- 13mm GIB® plasterboard, minimum 32mm x 6g GIB® Grabber® high thread screws*

Installation

- 300mm centres around sheet perimeter
- Place fasteners no closer than 12mm from paper bound sheet edge or 18mm from any cut edge
- Fasteners at wall corners to be placed 50mm in from the corner in each direction
- Do not place GIBFix® adhesive at sheet edges or within 200mm of fasteners
- Place daubs of GIBFix® adhesive at 300mm centres to intermediate studs
- Sheet edges at door or window openings can be adhesive fixed unless forming part of the perimeter of a bracing element

Stopping

- Refer to the Jointing and Finishing section (p. 78)

*Some GIB® Performance Systems may require different fastener lengths and types. Refer to the applicable GIB® System literature for more information.

Timber Frame – Vertically Fixed

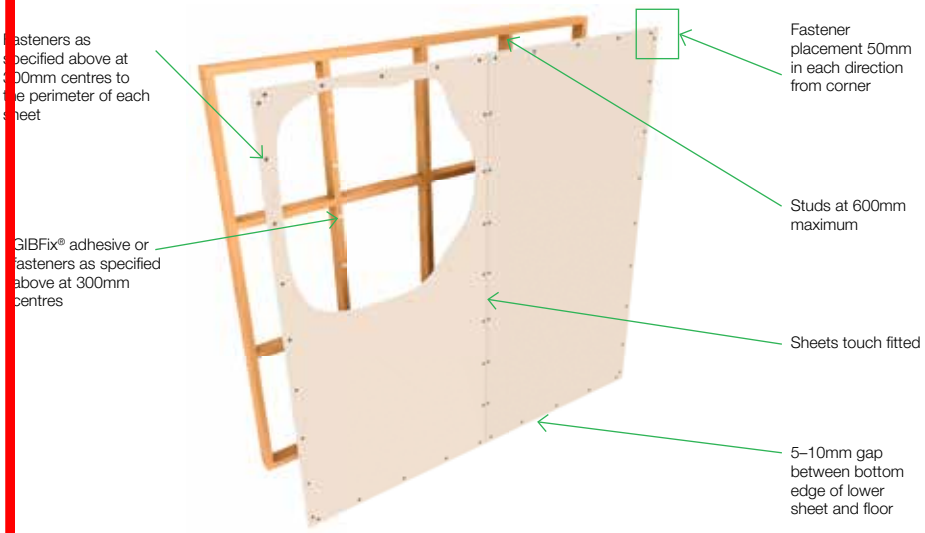

KDC - Approved Building Consent Document - BC210441 - Pg 298 of 512 - 30/08/2021 - Comply NZ

4.3 GIB® PLASTERBOARD INSTALLATION – WALLS

For installation guidance on GIB EzyBrace® and GIB Aqualine® Wet Area Systems refer to the GIB® Performance Systems section.

For all other GIB® Performance Systems refer to the relevant GIB® systems literature.

4.3.3 Steel Frame – Horizontally Fixed

Metal framing to which GIB® plasterboard is fixed must be in accordance with AS/NZS 4600 or NASH Standard. The lining thickness for specific design steel framing systems can be determined by the designer as a component in the system.

For other light steel framing application a minimum thickness of 13mm GIB® plasterboard shall be used.

Wall Framing

- Steel stud dimensions to be min. 64 x 34 x 0.50mm nominal with a 6mm return
- Steel channel dimensions to be min. 64 x 30 x 0.50mm nominal
- Studs must be spaced at 600mm centres maximum
- Ensure that the studs are placed with the open side facing in the same direction (see diagram p. 42)

Fasteners

- 13mm GIB® plasterboard, minimum 25mm x 6g GIB® Grabber® fine thread self taping screws*

Installation

- 300mm to top and bottom channels and end studs
- Pairs of single fasteners to each stud where horizontal joint crosses
- Place fasteners no closer than 12mm from paper bound sheet edge or 18mm from any cut edge
- It is recommended that fasteners at wall corners be placed 50mm in from the corner in each direction
- Do not place GIBFix® adhesive at sheet edges or within 200mm of fasteners
- Place daubs of GIBFix® adhesive at 300mm centres to intermediate studs
- Sheet edges at door or window openings can be adhesive fixed unless forming part of the perimeter of a bracing element

Stopping

- Refer to the Jointing and Finishing section (p. 78)

*Some GIB® Performance Systems may require different fastener lengths and types. Refer to the applicable GIB® System literature for more information.

Steel Frame – Horizontally Fixed

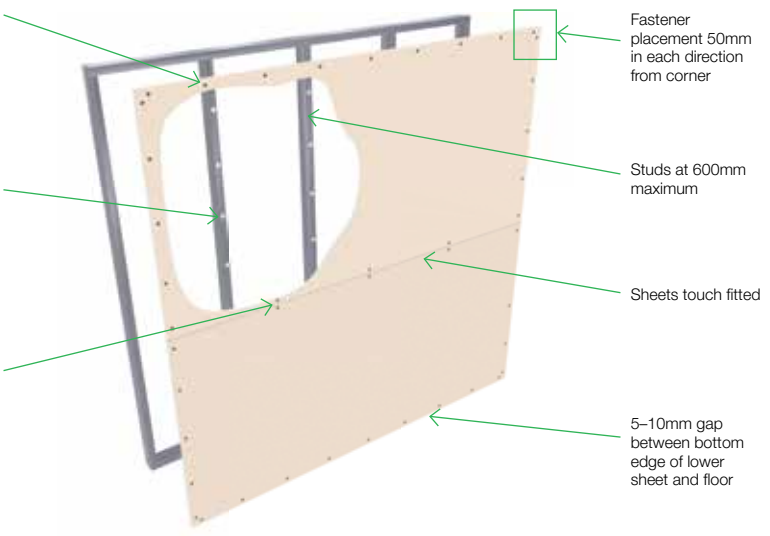

KDC - Approved Building Consent Document - BC210441 - Pg 299 of 512 - 30/08/2021 - Comply NZ

4.3 GIB® PLASTERBOARD INSTALLATION – WALLS

For installation guidance on GIB EzyBrace® and GIB Aqualine® Wet Area Systems refer to the GIB® Performance Systems section.

For all other GIB® Performance Systems refer to the relevant GIB® systems literature.

4.3.4 Steel Frame – Vertically Fixed

Metal framing to which GIB® plasterboard is fixed must be in accordance with AS/NZS 4600 or NASH Standard. The lining thickness for specific design steel framing systems can be determined by the designer as a component in the system.

For other light steel framing application a minimum thickness of 13mm GIB® plasterboard must be used.

Wall Framing

- Minimum steel stud dimensions to be min. 64 x 34 x 0.50mm nominal with a 6mm return
- Steel channel dimensions to be min. 64 x 30 x 0.50mm nominal
- Studs shall be spaced at 600mm centres maximum
- Ensure that the studs are placed with the open side facing in the same direction (see diagram p. 42)

Fasteners

- 13mm GIB® plasterboard, minimum 25mm x 6g GIB® Grabber® fine thread screws*

Installation

- 300mm to centres around sheet perimeter
- Place fasteners no closer than 12mm from paper bound sheet edge or 18mm from any cut edge
- It is recommended that fasteners at wall corners be placed 50mm in from the corner in each direction
- Do not place GIBFix® adhesive at sheet edges or within 200mm of fasteners
- Place daubs of GIBFix® adhesive at 300mm centres to intermediate studs
- Sheet edges at door or window openings can be adhesive fixed unless forming part of the perimeter of a bracing element

Stopping

- Refer to the Jointing and Finishing section (p. 78)

*Some GIB® Performance Systems may require different fastener lengths and types. Refer to the applicable GIB® System literature for more information.

Steel Frame – Vertically Fixed

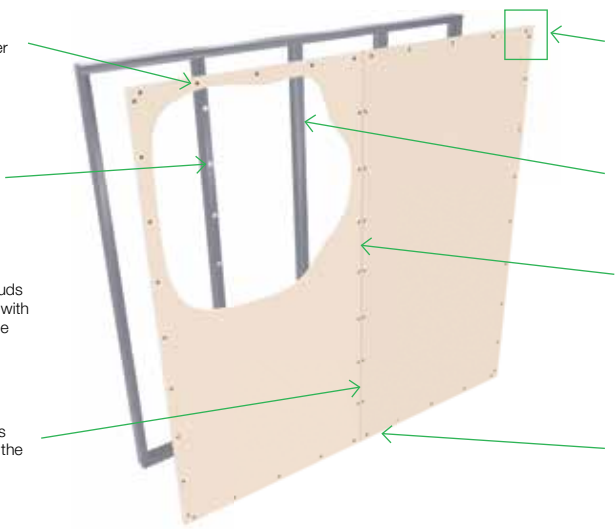

KDC - Approved Building Consent Document - BC210441 - Pg 300 of 512 - 30/08/2021 - Comply NZ

4.3.5 Fastening to Metal Studs

Correct Method

As the face of a steel stud can deflect initially, the correct sequence of attaching the plasterboard is important. The first sheet is attached to the open side of the stud which will cause minor deflection but will pull back tight against the sheet when the screw is fully tightened.

When the second sheet is fixed there will be minimal deflection as the open flange is now supported by the previous sheet.

Support the stud to avoid twisting.

Fastening GIB® Plasterboard to Metal Studs

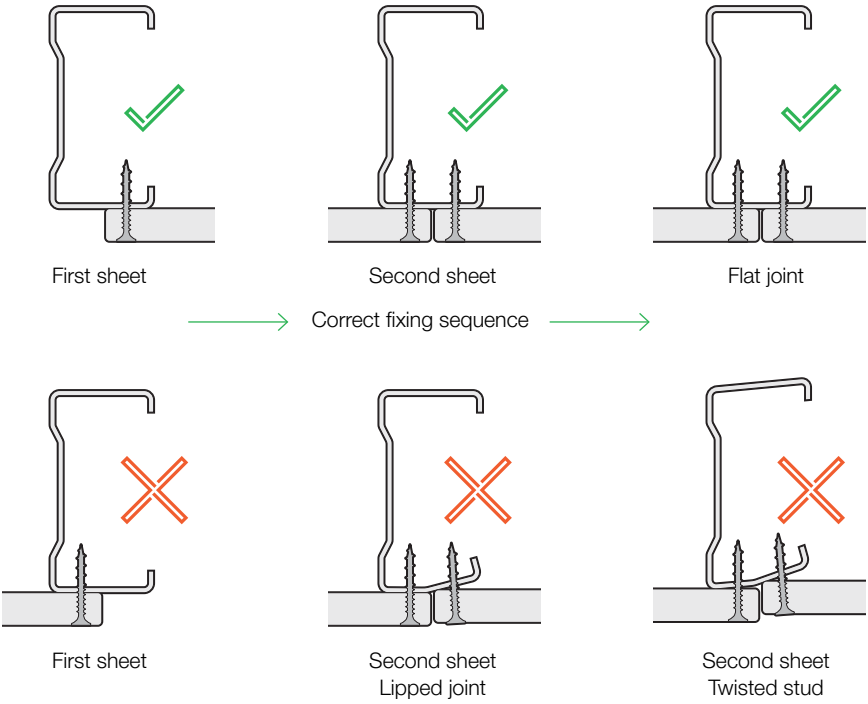

Incorrect fixing method can result in lipped joints, twisted studs and misalignment of the wall.

Temporary Fixing

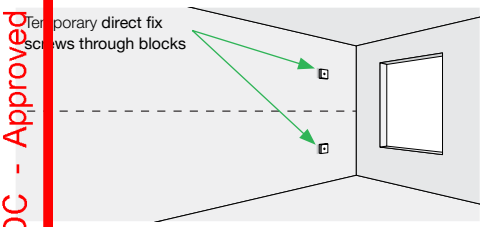

Tip: Occasionally a bow may develop in the board due to storage methods. It might be necessary to temporarily hold the board until the adhesive cures.

Screw through an offcut of plasterboard and remove the block and screw once adhesive has cured.

KDC - Approved Building Consent Document - BC210441 - Pg 301 of 512 - 30/08/2021 - Comply NZ

4.3.6 Grooved Jambs and Architraves

Winstone Wallboards recommends:
The use of architraves for finishing around doors and windows for the following reasons.
- Larger plasterboard sheets can be used, resulting in fewer joints.
- Speedier installation of plasterboard.
- Reduced chance of remedial work due to better placement of joints

Architraves make best practice fixing of plasterboard much simpler. If the use of grooved jambs is unavoidable here is some information to help minimise plasterboard fixing problems.

Grooved door jambs and window liners are an integral part of the New Zealand building scene. Unfortunately their use means that additional joints often need to be made in the wall surface. Installation of grooved jambs is subject to workmanship skills. Unless the jambs are correctly set up and installed, with a 1–2mm clearance for the plasterboard, it is difficult to install the board effectively.

If the use of grooved jambs is unavoidable there are some golden rules to be followed.

The groove must be at least 1–2mm wider than the board that is being used. Trying to get a 10mm plasterboard into a 10mm groove will be difficult.

Line the back of the groove up with the face of the substrate.



Correct installation of grooved jambs using an 11–12mm packer.

Grooved Jambs and Architraves

Summary
- Grooved jambs are designed to be quick and easy to install. Unless they are installed correctly, they can cause delays in plasterboard fixing and remedial work due to poorly positioned joints
- Unless a small amount of time and effort is invested in getting the unit set up correctly, grooved jambs and liners can cause far more problems than they are worth
- Simple best practice carpentry techniques are all that is required to install units accurately
  - Accurate measuring and ordering by the building contractor
  - Accurate fabrication by the joinery manufacturer
  - Careful installation by the installer
- The use of architraves is the recommended method of finishing around doors and windows

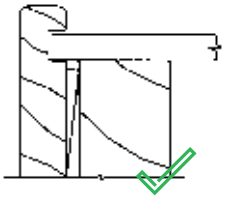

Correct

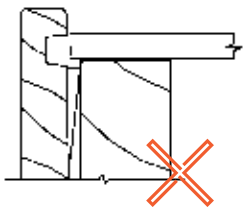

Incorrect

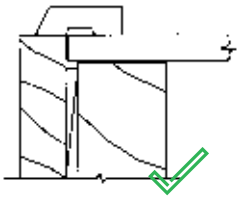

Recommended option using architrave

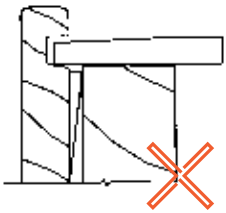

DO NOT place the tapered edge of a sheet into the groove. This requires unnecessary additional stopping.

KDC - Approved Building Consent Document - BC210441 - Pg 302 of 512 - 30/08/2021 - ComplyNZ

4.3.7 Reducing Joints When Using Grooved Jambs

— Line the wall with the opening before lining any adjacent walls
— Joinery must be accurately installed to give 1.5–2mm clearance for sheet into the groove. (see p. 43)
— Groove depth should be 8mm minimum
— Cut lower sheet 20mm less than overall wall length
— Measure from wall or floor to outer edge of joinery frame (not into groove)
— Cut lower sheet as shown in Fig. 2
— Install sheet by placing against the wall and sliding and lifting into grooves as required
— Repeat the procedure for the upper sheet. Measure D from the top edge of the fixed lower sheet to the top outer edge of the window frame. Deduct 6mm from this measurement

Fig. 1

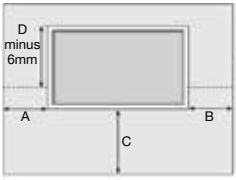

Fig 2. – Lower Sheet

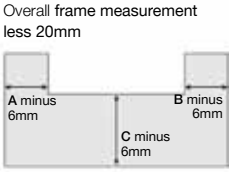

4.4 INSTALLATION TO CEILINGS

4.4.1 General Installation

Truss dimensions and spacings must comply with NZS3604:2011.

The use of GIB® Rondo® metal ceiling battens is strongly recommended. Timber battens can be prone to conditions that contribute to joint failure and popped fasteners. If the use of timber ceiling battens is unavoidable, additional care needs to be taken to ensure that the moisture content is 18% or less (see p. 30).

To limit sag in GIB® plasterboard ceilings, long term uniformly distributed loads such as that of fixtures and fittings and/or overlaid insulation shall not exceed 3kg/m² unless independently supported

Winstone Wallboards recommends:

— 13mm GIB® plasterboard on GIB® Rondo® steel battens at 600mm centres
— Ceiling battens are installed after the roof framing is complete and the roof has been loaded
— All ceiling sheets be fixed at right angles to the ceiling framing. Sheets must not be fixed in the same direction as the framing to which it is attached. All ceiling battens in a single area need to run in the same direction to enable this. Sometimes this will require additional nogs to be fitted between trusses. Failure to do this will result in a tapered edge/cut edge joint at a point that is highly susceptible to cracking

General Ceiling Installation



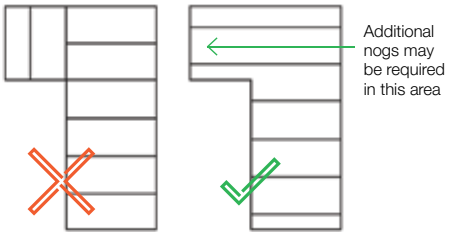

KDC - Approved Building Consent Document - BC210441 - Pg 303 of 512 - 30/08/2021 - ComplyNZ

4.4.2 Standard Ceiling Fixing

This information applies to the general installation of GIB® plasterboard. If bracing, fire or noise control is a consideration consult the relevant GIB® Systems literature.

Ceiling Framing

- If using timber ceiling battens, timber moisture content must not exceed 18% prior to lining (see p. 30)
- Battens should all run in the same direction within a ceiling area. Additional nogs may be required to achieve this

Batten Spacing

- 10mm GIB® plasterboard – 450mm maximum
- 13mm GIB® plasterboard – 600mm maximum
- Winstone Wallboards recommends the use of 13mm GIB® plasterboard in ceiling applications for optimal performance

Fasteners

Metal Battens

- Minimum 25mm x 6g GIB® Grabber® fine thread self tapping screws*

Timber Battens

- Minimum 32mm x 6g GIB® Grabber® high thread screws*

Fastener Spacings

- Single screws at the edges and centre of the sheet across the batten
- Single screw at 600mm maximum to the perimeter of the ceiling. See p. 68 for ceiling diaphragm installation
- Place fasteners no closer than 12mm from a taper sheet edge or 18mm from a cut sheet edge

Adhesive

- Place daubs of GIBFix® adhesive at 200mm to intermediaries
- Do not place adhesive at sheet edges or within 200mm of fasteners

Lining

- Sheets should be touch fitted
- Sheets must be fixed at right angles to the ceiling framing unless otherwise specified in GIB® Performance System specifications

Stopping

- Refer to the Joint and Finishing section (p.78)

*Some GIB® Performance Systems may require different fastener lengths and types. Refer to the applicable GIB® System literature for more information

Ceilings

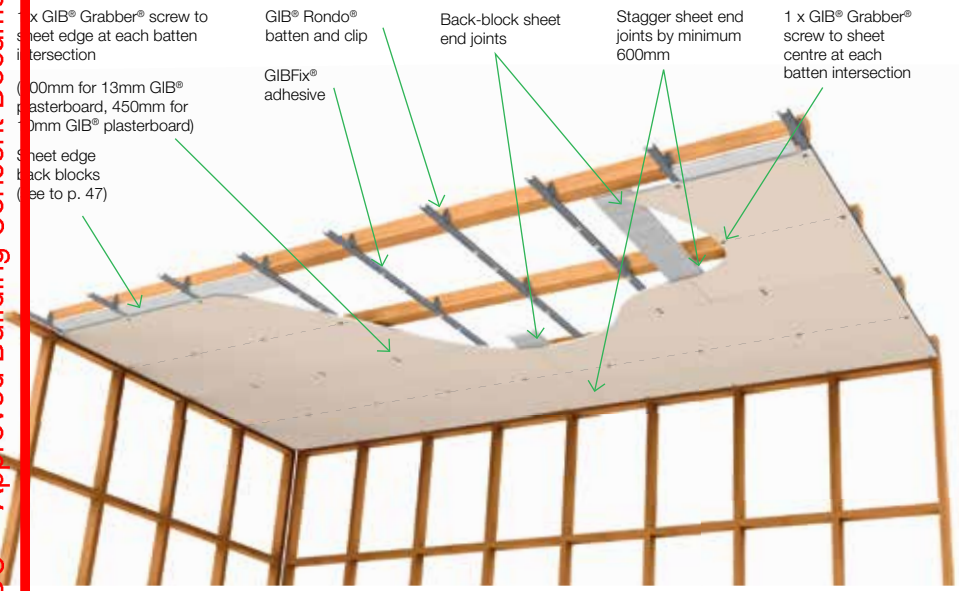

KDC - Approved Building Consent Document - BC210441 - Pg 304 of 512 - 30/08/2021 - Comply NZ

4.4.3 Raking Ceilings and Skillion Roofs

Due to the higher temperatures and low air movement that can occur in raking ceilings it is strongly recommended that clip fixed GIB® Rondo® metal battens are used (these are considered to be ceiling suspension systems).

Because of the heat that can be generated in roof spaces, timber battens can be subjected to conditions that contribute to joint failure and dropped fasteners.

The use of control joints or perimeter relief will help reduce the risk of cracking in large, expansive ceilings.

These may not be suitable for use in Fire or Noise Control Systems.

Back blocking of all ceiling joints is highly recommended as it can reduce the likelihood of cracking.

Fixed – Steel Backing Angle

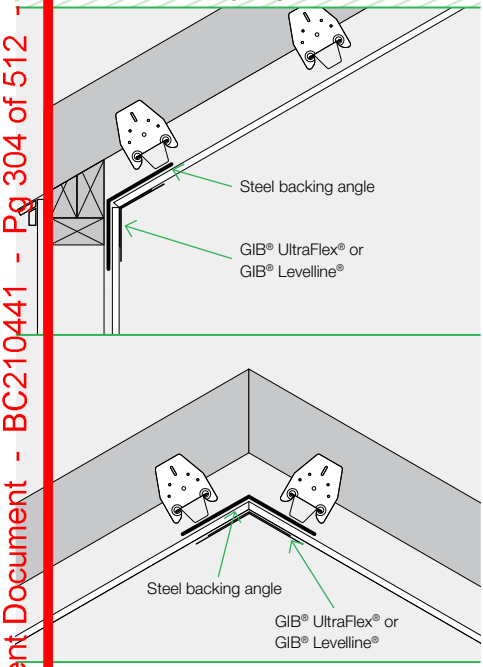

Flexible – Perimeter Relief

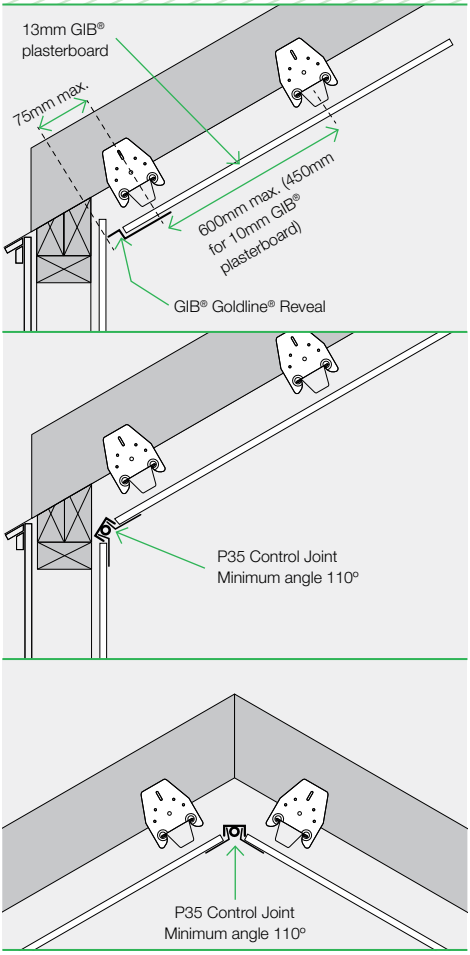

Note: It is recommended that a flexible perimeter relief be used where there is a high risk of movement.

KDC - Approved Building Consent Document - BC210441 - Pg 305 of 512 - 30/08/2021 - Comply NZ

4.4 Back Blocking – Butt and Edge Joints

Back blocking is the practice of laminating an off-cut of plasterboard to the back of a joint using GIB-Cove® Bond adhesive.

Back blocking is required to ceiling sheet edge joints as follows:

Timber Battens	When there are 3 or more tapered edge joints in a ceiling area
Metal Battens	When there are 6 or more tapered edge joints in a ceiling area

Back blocking is required to all joints when a Level 5 Finish has been specified.

Back blocking is strongly recommended at sheet end joints in ceilings. Some fire rated systems require that joints are made on solid blocking and that requirement takes precedence and must be followed. Refer to GIB® Fire Rated Systems Specifications for more information.

Back blocking is not required for a Level 4 Finish when a suspension system has been used. This includes GIB® Rondo® metal ceiling batten system fixed on clips. See p. 46. Sheets ends should be back blocked.

Due to wind pressure when garage door is open, and vibration from garage door opening, it is recommended that all sheet joints in garage ceilings are back blocked.

Back Blocking Comprises 2 Steps:

- Laminating a piece of plasterboard to the back of the joint
- Forming a tapered edge to help form a flat stopped joint

Step 2 can be omitted but the stopped joint will need to be much wider (500–600mm) in order to minimise the effect of the stopping joint thickness.

Back Blocking Technique

- Make back blocks at least 300mm wide and cut to fit loosely between framing members
- Apply GIB-Cove® Bond to the underside of the back block with a 6–8mm notched trowel
- Do not use synthetic wall board adhesive for back blocking
- If possible, attach the back block to the back of the joint from above
- If access from above is not possible, apply GIB-Cove® Bond to one half of the back block before attaching the back block to the edge of the sheet. Install a couple of screws through the tapered edge to secure the back block
- Apply GIB-Cove® Bond to the remainder of the back block just before fixing the next sheet

Back Blocking

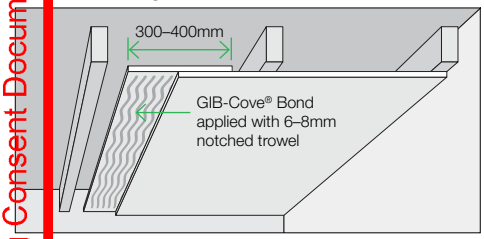

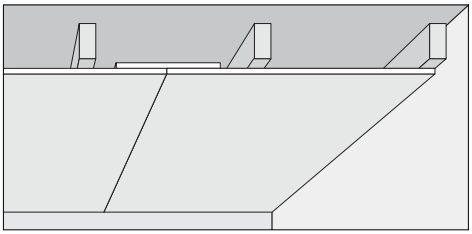

Creating a Tapered Edge

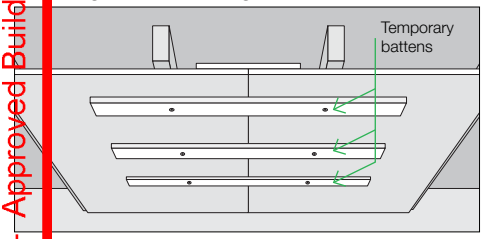

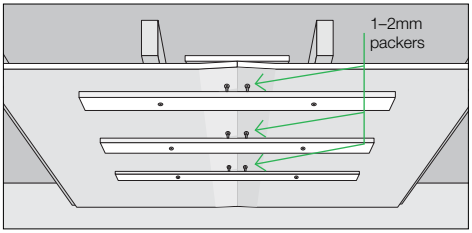

KDC - Approved Building Consent Document - BC210441 - Pg 306 of 512 - 30/08/2021 - Comply NZ

4.4.5 Control Joints – Walls and Ceilings

These control joints and maximum recommended centres aim to provide relief from stresses associated with changes in temperature, humidity and the response of dissimilar construction materials (e.g. metal, timber, gypsum and plasterboard). For more significant structural movements consult the building designer.

Walls

- In long unbroken partitions or wall runs, control joints are required at maximum 12m centres They are also required where structural control joints occur in the primary structure
- Door frames extending from floor to ceiling constitute effective control joints

Ceilings

- Extensive ceiling areas must have control joints spaced at maximum 12m centres It is recommended joints be positioned to intersect lighting fixtures, heating vents or air diffusers

Other situations

- Where GIB® plasterboard meets dissimilar materials, it must be isolated by an edge trim or casing bead
- In stairwells and high timber framed walls, provision should be made for timber movement by leaving a 20mm gap between the sheet lining at, or near, the upper floor joists. This gap can be covered by a suitable cover batten

Joint Control	
Joint Position	**Maximum Centres**
Walls	12 metres
Ceilings	12 metres

Perimeter relief using GIB® Goldline® Tape-On Trims

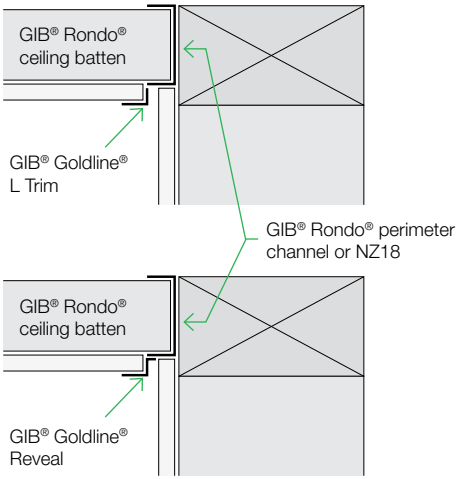

Control Joints in Ceilings – Recommendation to Reduce Risk of Cracking

There are some common places within the 12m spacing where cracks are most likely to occur in ceilings (as shown below).

It is recommended to consider installing control joints in these locations (as shown below) to reduce the risk of cracking.

Where hallways exit from a larger ceiling area.	At internal corners in irregular shaped ceilings or where the main ceiling would look better divided into smaller sections.	At openings such as skylights, voids or recessed strip lighting. This may also include designated functional areas of a space.
Plan view 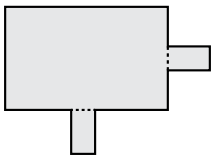	Plan view 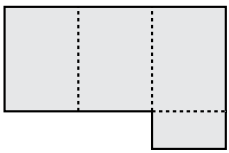	Plan view 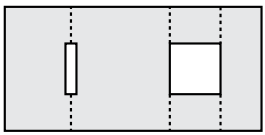

KDC - Approved Building Consent Document - BC210441 - Pg 307 of 512 - 30/08/2021 - Comply NZ

4.4.5 Control Joints – Walls and Ceilings

Installation of the GIB® Rondo® P35 control joint

- Allow an 18mm minimum gap between the plasterboard sheets
- Locate the GIB® Rondo® P35 control joint centrally in the gap. Staple both flanges to the lining at 150mm centres maximum
- Finish with jointing compound using the channel nibs as screeding guides
- When the joint is dry remove the protective tape

Control joint using GIB® Goldline® Platinum trim

- Allow a 14–17mm gap between the plasterboard sheets
- Install GIB® Goldline® Platinum GR reveal to one side of joint
- Install GIB® Goldline® L Trim to the other side. Use a spacer to provide an even gap between the trim. This can be between 3–12mm
- Apply compounds as described on p. 83–84

GIB® Plastic W-profile Control Joint

- Discrete finish and has tear-away tabs for easy installation
- This trim is thicker than the other control joint trims and thus may have implications for the final joint height
- Available in 3.0m lengths

Note: Contact the GIB® Helpline 0800 100 442 for detailing of control joints in GIB® Performance Systems (e.g. fire, noise, bracing).

Installation of the Rondo® P35 control joint

1.

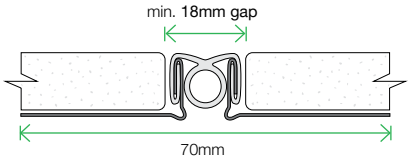

Control joint using GIB® Goldline® Platinum trim

2.

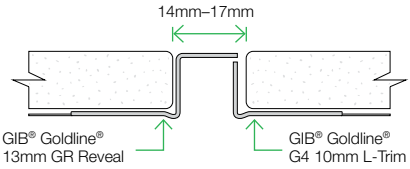

GIB® Plastic W-profile Control Joint

3.

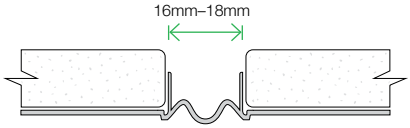

KDC - Approved Building Consent Document - BC210441 - Pg 308 of 512 - 30/08/2021 - ComplyNZ

GIB® Rondo® Steel Battens

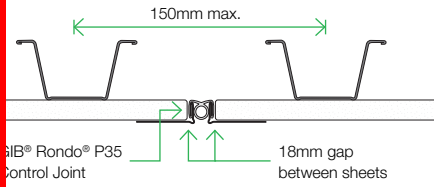

Timber Stud Walls

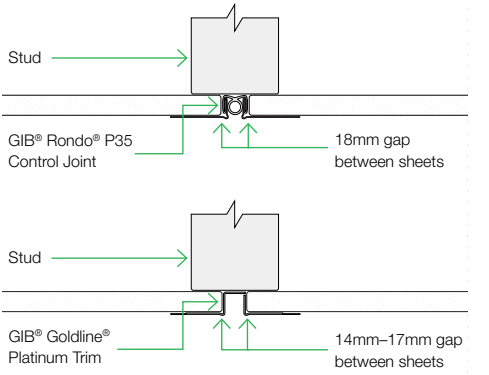

Two Storey Full Height Wall with Expansion Joint

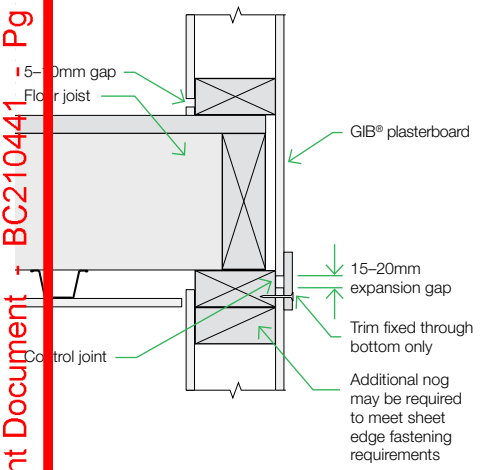

Masonry Junction Timber or Steel Framing

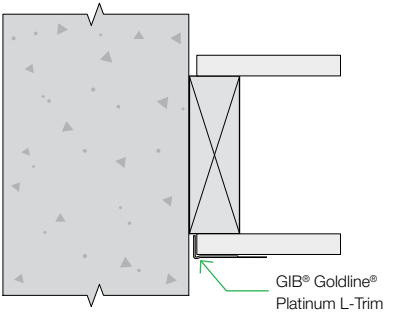

KDC - Approved Building Consent Document - BC210441 - Pg 309 of 512 - 30/08/2021 - Comply NZ

4.4 6 GIB® Rondo® 310 Metal Batten System Installation Instructions

The GIB® Rondo® 310 system forms a strong, stable and flat substrate for ceilings in residential and commercial applications. The 35mm dimension allows it to be directly substituted into ceilings where 35mm timber battens would traditionally have been used. Consult an electrical contractor for any earthing requirements that may need to be incorporated.

There are two methods of fixing GIB® Rondo® 310 metal battens.

Recommended method

Clipped using either:

- 311D clip for a drop of 0–30mm
- 313 clip where a larger drop is required between the bottom of the truss chord, joist or rafter and the back of the ceiling batten

A drop of up to 130mm can be achieved in order to accommodate services or variations in framing heights

- GIB Quiet Clip® in GIB Noise Control® Systems

Alternative method

- Directly by fastening with pairs of min. GIB® Grabber® 32mm x 8g wafer head screws through the flange
- Alternatively pairs of min. 45mm x 2.8mm flat head nails can be used
- For fixing to steel framing a drill tip screw is recommended

Note: If the 310 system is to be used in a ceiling diaphragm the batten needs to be screwed directly through the flanges to the framing.

See detail on page (69)

GIB® Rondo® 310 System

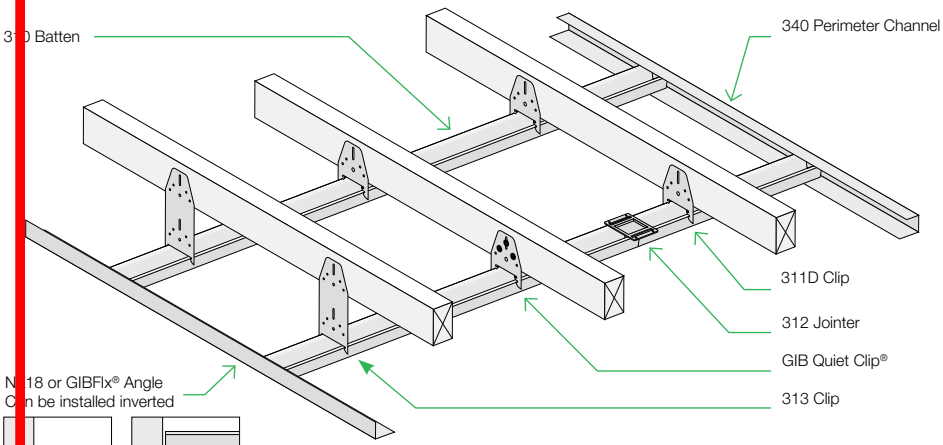

For ceiling diaphragm details refer to p. 66

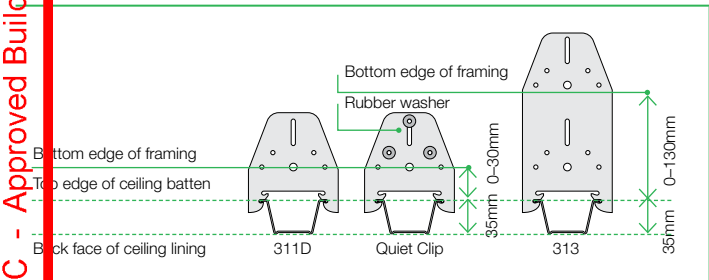

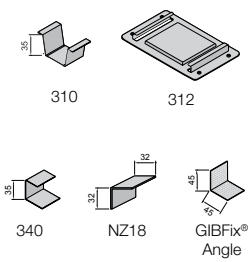

KDC - Approved Building Consent Document - BC210441 - Pg 310 of 512 - 30/08/2021 - Comply NZ

4.4.6 GIB® Rondo® 310 Metal Batten System Installation Instructions

GIB® Rondo® 310 System

Recommended Best Practice Details

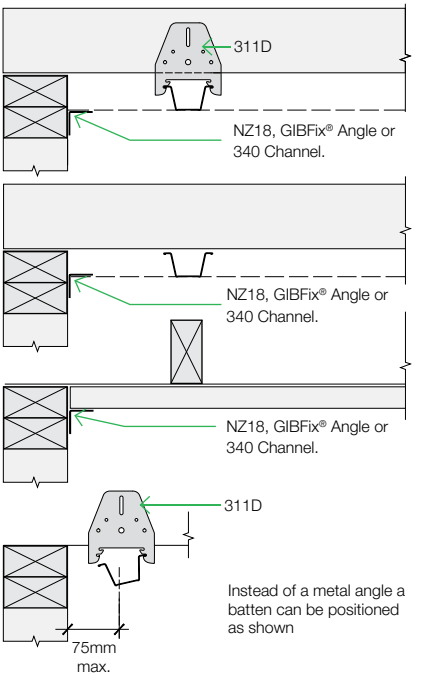

Other Details

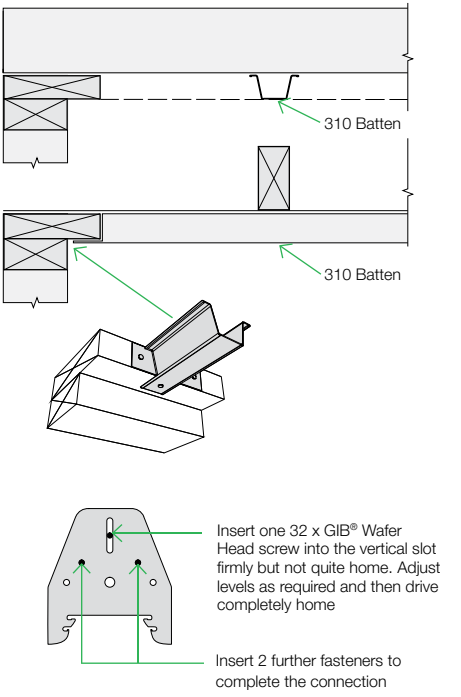

- Establish a datum line for the ceiling
- Place a string line on the datum line at right angles to the battens, under the truss or joist closest to the centre of the room
- Install GIB® Rondo® clips at 600mm centres (450mm for 10mm GIB® plasterboard) using the string line to establish the correct position
- Cut the batten to the required length using snips or a hacksaw
- Insert the batten into the channel at each end and fit into the clip
- Install remainder of clips ensuring that the batten is straight and flat

GIB® Rondo® 310 Batten Span Table for Residential Internal Applications

GIB® Plasterboard Thickness – Single layer	10mm	13mm
Maximum Batten Spacing (mm)	450	600
Multi Span (mm)	1200	
Single Span and Garages (mm)	900	

Battens

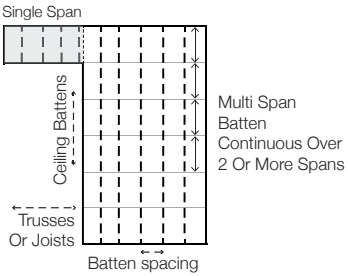

KDC - Approved Building Consent Document - BC210441 - Pg 311 of 512 - 30/08/2021 - Comply NZ

4.4.7 GIB® Rondo® 308 Metal Batten System Installation Instructions

The GIB® Rondo® 308 system is a light weight yet very strong ceiling batten. In addition to its function as a ceiling batten it can also be used as a wall furring channel and is an integral part of GIB Noise Control® Systems for walls. Consult an electrical contractor for any earthing requirements that may need to be incorporated.

Recommended method

The GIB® Rondo® 308 system is installed using either:

- 226 clip for a drop of 0–30mm
- 394 clip where a larger drop is required between the bottom of the truss chord, joist or rafter and the back of the ceiling batten. Up to 130mm clearance between the bottom of the framing and the back of the batten of can be achieved in order to accommodate services or variations in framing heights

Note: If the 308 system is to be used in a ceiling diaphragm, the batten needs to secured directly to the framing (see p. 69).

GIB® Rondo® 308 System

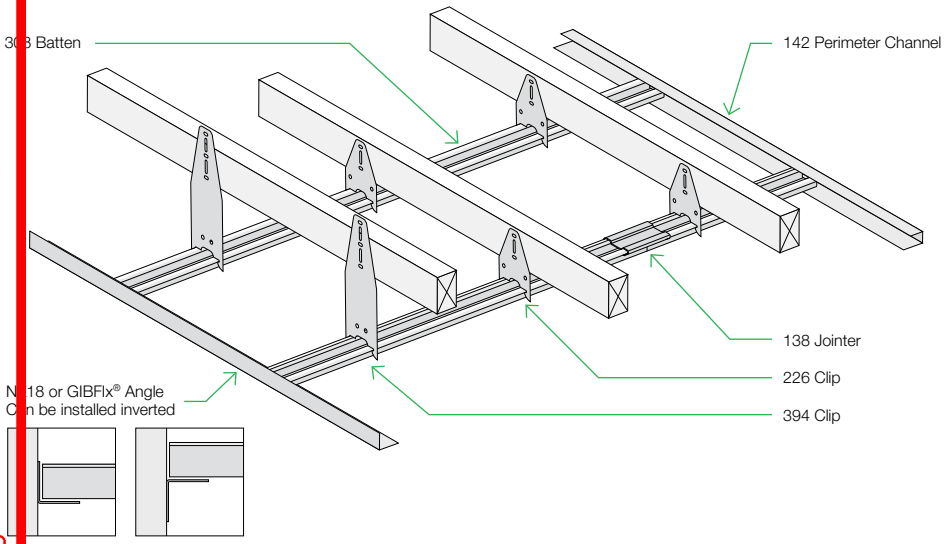

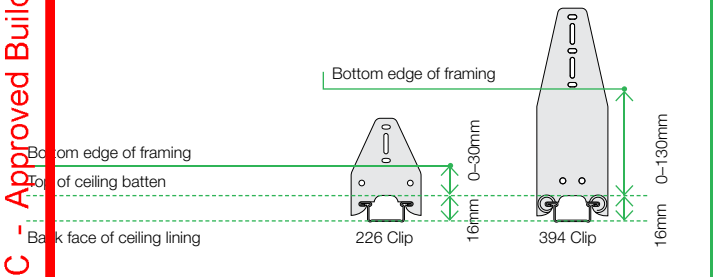

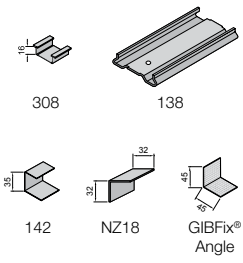

KDC - Approved Building Consent Document - BC210441 - Pg 312 of 512 - 30/08/2021 - Comply NZ

4.4.7 GIB® Rondo® 308 Metal Batten System Installation Instructions

GIB® Rondo® 308 System

Recommended Best Practice Details

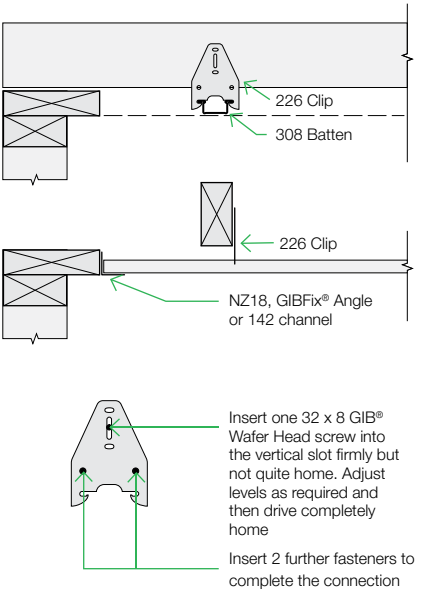

Other Details

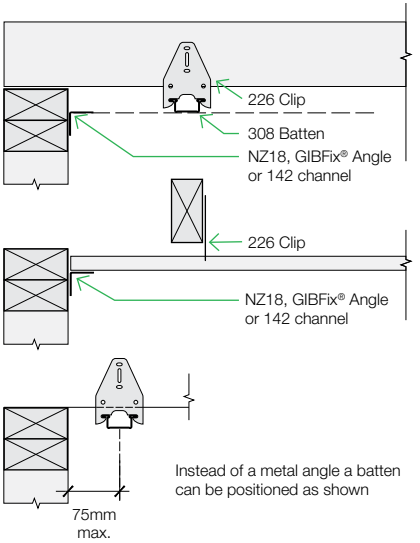

- Establish a datum line for the ceiling
- Place a string line on the datum line at right angles to the battens, under the truss or joist closest to the centre of the room
- Install GIB® Rondo® clips at 600mm centres (450mm for 10mm GIB® plasterboard) using the string line to establish the correct position
- Cut the batten to the required length using snips or a hacksaw
- Insert the batten into the channel at each end and fit into the clip
- Install remainder of clips ensuring that the batten is straight and flat

GIB® Rondo® 308 Batten Span Table for Residential Internal Applications

GIB® Plasterboard Thickness – Single layer	10mm	13mm
Maximum Batten Spacing (mm)	450	600
Multi Span (mm)	1200	
Single Span and Garages (mm)	900	

Battens

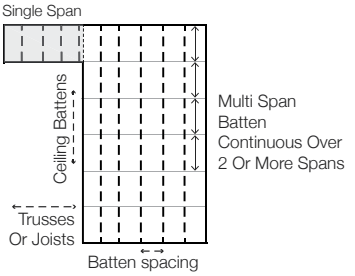

KDC - Approved Building Consent Document - BC210441 - Pg 313 of 512 - 30/08/2021 - Comply NZ

4.4.8 GIB® Rondo® Suspended Ceiling System

The range of GIB® Rondo® suspended ceiling componentry provides additional clearance above the ceiling level. This could be to run electrical, plumbing or ventilation equipment. The system allows for the ceiling lining material to be directly attached to the lower face of the battens.

This is not to be confused with a two way grid system which accommodates proprietary ceiling tiles. The components can be assembled in a wide range of combinations to suit a variety of applications. Refer to GIB® Rondo® System literature for more information.

GIB® Rondo® Suspended Ceiling Components

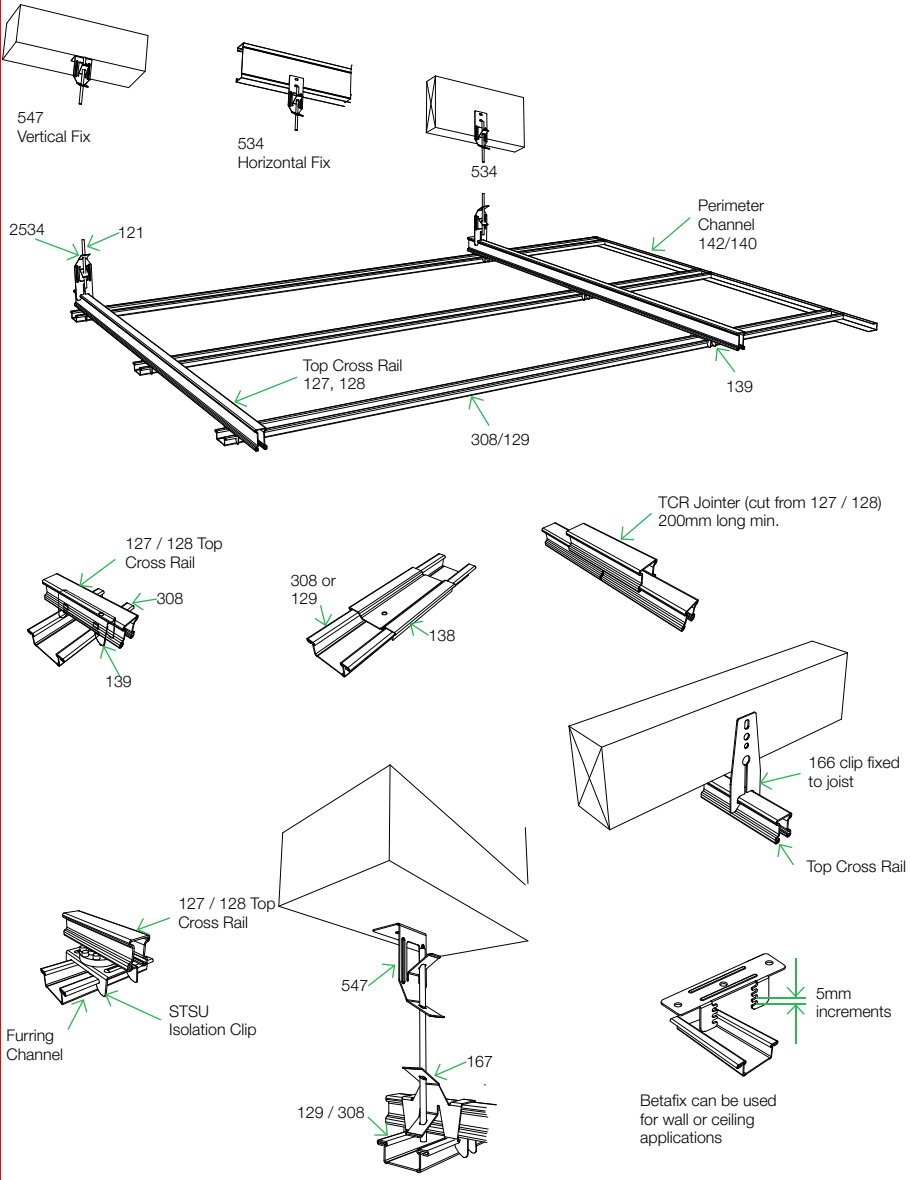

KDC - Approved Building Consent Document - BC210441 - Pg 314 of 512 - 30/08/2021 - Comply NZ

2.5 CURVING GIB® PLASTERBOARD

GIB® plasterboard can be curved. Curvature is dependent on the thickness and type of board and whether the board is applied wet or dry. Sheets must be fixed horizontally to walls.

The radii shown are for GIB® Standard and GIB Ultraline®. Other performance boards such as GIB Fyreline® and GIB Aqualine® can also be curved but with slightly increased radii due to the increased density of the board.

It is not recommended to curve high density boards such as GIB Braceline / GIB Noiseline® or GIB Toughline® due to the risk of breakage.

Minimum Bending Radii of GIB® Plasterboard

Board Thickness/Type	Minimum Radius (Wet)	Minimum Radius (Dry)
10mm GIB® Standard	900mm	1200mm
13mm GIB® Standard	1000mm	1500mm
10mm GIB Ultraline®	1000mm	1500mm
13mm GIB Ultraline®		1500mm

Framing Centres

Wall or Ceiling Radius	Maximum Stud, Batten or Joist Spacing
900mm–1200mm	200mm
Over 1200mm–3000mm	300mm
Over 3000mm	400mm

Application Method

- Ensure that framing spacings are correct
- If possible, select board length to allow for one unbroken panel to cover the entire curve with enough extra length to extend 300mm beyond each end
- Alternatively apply water with a paint roller to both sides
- If creating an outside curve, begin installation at one end and fasten the sheet as it is wrapped around the curve
- If creating an inside curve, start fastening the sheet at the centre of the curve and work outwards to the end of the sheet

Note: Lining the inside of the curve will be more difficult than lining the outside and will require additional labour.

Curving GIB® Plasterboard

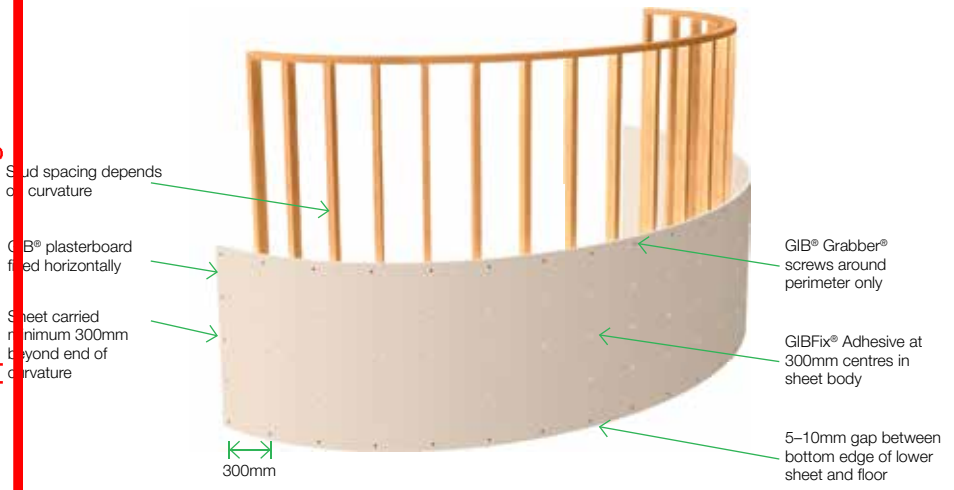

KDC - Approved Building Consent Document - BC210441 - Pg 315 of 512 - 30/08/2021 - ComplyNZ

2.6 FIXING TO MASONRY

Direct bonding of GIB® plasterboard to concrete or brick masonry walls must only be considered when the concrete or masonry substrate is thoroughly dry and adequately protected against moisture penetration.

The substrate must be firm, dry, and free of dust, grease, release agents and curing compounds.

In situations where dampness or rain penetration problems exist, corrective measures must be taken prior to installation of interior linings.

Movement and control joints in the main structure must be carried through the GIB® plasterboard linings. This can be achieved by installing a control joint in the plasterboard.

Direct Bonding (For Sheet Heights up to 3m)

- Determine the sheet position for either vertical or horizontal fixing and mark on wall
- GIB® plasterboard sheets can be fixed vertically or horizontally. Horizontal fixing creates fewer joints and is recommended
- Use GIB-Cove® Bond to bond the GIB® plasterboard to concrete or masonry surfaces
- Mix GIB-Cove® Bond to a smooth, thick consistency
- Apply GIB-Cove® Bond daubs approximately 50mm diameter x 12mm thick at 300–400mm centres vertically and 500–600mm centres horizontally. Ensure that adhesive is placed no closer than 25mm from the edge of the sheet
- Where irregularities up to 10mm occur on the masonry surface, use larger daubs of adhesive to bridge the gap
- Position the sheet and press into place
- Obtain true alignment and flatness by using a long straight edge over the surface of the sheet
- Alternatively, apply adhesive over the entire back surface of the sheet using a notched trowel
- Apply GIB-Cove® or GIB® Trims to wall and ceiling intersections
- Fix skirting and architrave with masonry nails or adhesive

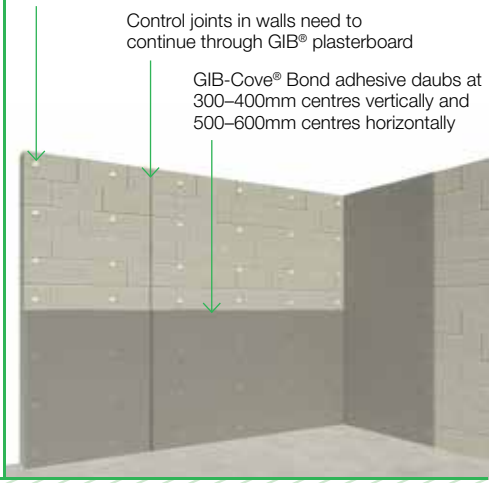

Wall Strapping must be used:

- Wall Strapping must be used:
  - When the concrete or masonry wall is below ground level
  - When the concrete or masonry wall is an external wall, unless a proprietary external weatherproofing system can be verified as providing weather tightness for the life of the building
  - In bathrooms, laundries and other wet areas
  - When the concrete or masonry substrate or paintwork is in poor condition
  - When the wall surface contains irregularities of more than 8–10mm strapping can be packed to provide a flat surface for the plasterboard
  - For walls in excess of 3.0m in height
- Use either nominally 50 x 25mm timber strapping or metal furring channels. Deeper strapping may be required to accommodate insulation requirements
- Fix DPC behind timber strapping
- Fix strapping vertically to the wall surface at a maximum of 600mm centres, with either a continuous horizontal batten or nogs at the top and bottom of the wall
- Install services prior to installing GIB® plasterboard linings



2.6 FIXING TO MASONRY

Where insulation is required to concrete or masonry, it is recommended that GIB® Rondo® 308 battens are clipped to GIB® Rondo® A239 clips as shown. A239 clips should be spaced at 1200mm centres (maximum) vertically and 600mm centres (maximum) horizontally.

Anchor bolt

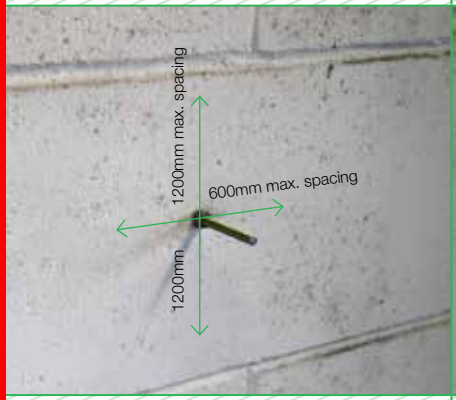

Polystyrene



A239 Clip



308 Batten



GIB® Plasterboard overlay



KDC - Approved Building Consent Document - BC210441 - Pg 316 of 512 - 30/08/2021 - ComplyNZ

KDC - Approved Building Consent Document - BC210441 - Pg 317 of 512 - 30/08/2021 - ComplyNZ

5.0 GIB® PERFORMANCE SYSTEMS

The GIB® Performance Systems section covers installation of GIB EzyBrace® and GIB Aqualine® Wet Area Systems. For other systems including GIB Noise Control®, GIB® Fire Rated, GIB® Tough and GIB® Intertenancy Barrier Systems refer to the appropriate GIB® systems literature.

5.1 GIB® BRACING SYSTEMS

This section covers the installation of GIB EzyBrace® Systems to timber framing to NZS 3604:2011. Full design details can be found in the GIB EzyBrace® Systems literature.

Bracing of steel framed walls is by specific design. For assistance refer to the document GIB EzyBrace® for Light Steel Frame Systems available from gib.co.nz or nashnz.org.nz.

GIB® Bracing elements code system:	
GS	GIB® Standard plasterboard or other similar thickness
BL	GIB Braceline®
P	7mm structural plywood manufactured to AS/NZS 2269:2012
1	Bracing element fixed to one side of the wall only
2	Bracing element fixed to both sides of the wall
N	Panel hold down not required
H	GIB HandiBrac® or metal strap and hold down bolt
NOM	Nominal fixing as per p. 38-39

KDC - Approved Building Consent Document - BC210441 - Pg 318 of 512 - 30/08/2021 - Comply NZ

9.11 Installation Summary

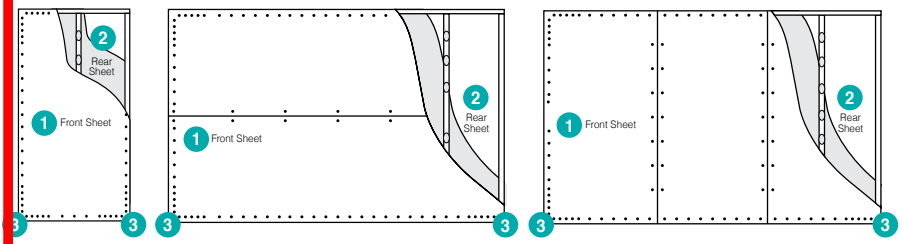

Sheet Installation

	Front Sheet 1		Rear Sheet 2		Panel Hold-Down Fixings 3	Fastener Spacing
	Lining	**Fasteners**	**Lining**	**Fasteners**		
GS2-NOM	Any 10mm or 13mm GIB® plasterboard	Minimum 32mm x 6g GIB® Grabber® high thread screws	Any 10mm or 13mm GIB® plasterboard	Minimum 32mm x 6g GIB® Grabber® high thread screws	Not Required	Corner fastening pattern as illustrated on p. 65. All four corners of GS2-NOM bracing element must be fastened at 50mm and 250mm from the edge of the sheet at 300mm centres
GS1-N	Any 10mm or 13mm GIB® plasterboard	Minimum 32mm x 6g GIB® Grabber® high thread screws	Not Required	Not Required	Not Required	**GIB® Plasterboard** Corner fastening pattern as illustrated on p. 65 Fasteners at 150mm to bracing element perimeter and: at 300mm centres to intermediate sheet joints for vertical fixing, or at stud/sheet junction for horizontally fixed elements, and GIBFix® adhesive daubs at 300mm are to intermediate framing **Structural Plywood** Fasteners at 150mm around the perimeter of every sheet and at 300mm centres to intermediate studs. Place fasteners no closer than 7mm from sheet edges. Plasterboard corner fastener pattern does not apply to plywood
GS2-N			Any 10mm or 13mm GIB® plasterboard	32mm x 6g GIB® Grabber® high thread screws		
GS2-H			Minimum 7mm structural plywood manufactured to AS/NZS 2269	50mm x 2.8mm flat head galvanised or stainless steel nails	Yes	
BLI-H	10mm or 13mm GIB Braceline®	Minimum 32mm x 6g GIB® Grabber® high thread screws	Not required	Not required		
BLG-H			Any 10mm or 13mm GIB® plasterboard	32mm x 6g GIB® Grabber® high thread screws		
BLS-H			Minimum 7mm structural plywood manufactured to AS/NZS 2269	50mm x 2.8mm flat head galvanised or stainless steel nails		

Note: Minimum bracing element length is 400mm

KDC - Approved Building Consent Document - BC210441 - Pg 319 of 512 - 30/08/2021 - ComplyNZ

9.1.2 System Specifications

GS2-NOM

1. 10mm or 13mm GIB® Standard plasterboard fixed to each side of the wall framing
2. Corner fastening pattern applies (see p. 65)
3. 32 x 6g GIB® Grabber® screws or GIB® Grabber® Dual Thread screws at 300mm to perimeter
4. Panel hold downs not required
5. Centre of the sheet may be fixed with adhesive or fastenings at 300mm
6. Joints and fastener heads must be stopped
7. GIB® tape must be used in joints
8. Sheets may be fixed horizontally or vertically

Bracing Element – Plasterboard side shown

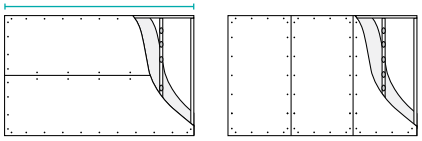

Horizontal Fixing | Vertical Fixing

GS1-N

1. Any 10mm or 13mm GIB® plasterboard to one side of the wall only
2. Corner fastening pattern applies (see p. 65)
3. 32 x 6g GIB® Grabber® screws or GIB® Grabber® Dual Thread screws at 150mm to perimeter
4. Centre of the sheet may be fixed with adhesive or fastenings at 300mm
5. Panel hold downs not required
6. Joints and fastener heads must be stopped
7. GIB® tape must be used in joints
8. Sheets may be fixed horizontally or vertically

Bracing Element – Plasterboard side shown

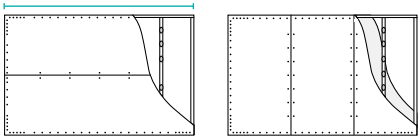

Horizontal Fixing | Vertical Fixing

GS2-N

1. Any 10mm or 13mm GIB® plasterboard to both sides of the wall. Both sides fixed as bracing elements
2. Corner fastening pattern applies (see p. 65)
3. 32 x 6g GIB® Grabber® screws or GIB® Grabber® Dual Thread screws at 150mm to perimeter
4. Centre of the sheet may be fixed with adhesive or fastenings at 300mm
5. Panel hold downs not required
6. Joints and fastener heads must be stopped
7. GIB® tape must be used in joints
8. Sheets may be fixed horizontally or vertically

Bracing Element – Plasterboard side shown

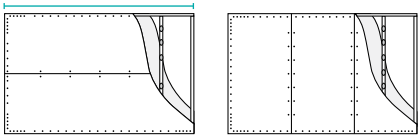

Horizontal Fixing | Vertical Fixing

GSP-H

1. Any 10mm or 13mm GIB® plasterboard to one side of the wall
2. 7mm structural plywood to the other side
3. Corner fastening pattern applies (see p. 65)
4. 32 x 6g GIB® Grabber® screws or GIB® Grabber® Dual Thread screws at 150mm to perimeter (plasterboard side) 50 x 2.8mm FH nails at 150mm to perimeter. Corner fastening pattern not applicable to plywood side
5. Panel hold downs required
6. Centre of the sheet may be fixed with adhesive or fastenings at 300mm
7. Joints and fastener heads must be stopped
8. GIB® tape must be used in joints
9. Sheets may be fixed horizontally or vertically

Bracing Element – Plasterboard side shown

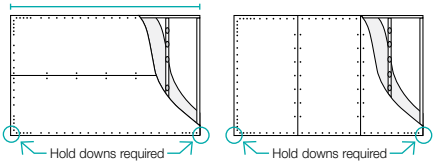

Horizontal Fixing | Vertical Fixing

KDC - Approved Building Consent Document - BC210441 - Pg 320 of 512 - 30/08/2021 - Comply NZ

5.1.2 System Specifications

B1-H

1. 10mm or 13mm GIB Braceline® to one side of the wall only
2. Corner fastening pattern applies (see p. 65)
3. 32 x 6g GIB® Grabber® screws or GIB® Grabber® Dual Thread screws at 150mm to perimeter
4. Centre of the sheet may be fixed with adhesive or fastenings at 300mm
5. Panel hold downs required
6. Joints and fastener heads must be stopped
7. GIB® tape must be used in joints
8. Sheets may be fixed horizontally or vertically

Bracing Element – Plasterboard side shown

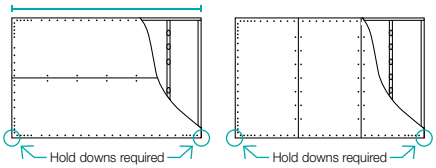

Horizontal Fixing | Vertical Fixing

BG-H

1. 10mm or 13mm GIB Braceline® to one side of the wall
2. Any 10mm or 13mm GIB® plasterboard to the other side. Both sides fixed as bracing elements
3. Corner fastening pattern applies (see p. 65)
4. 32 x 6g GIB® Grabber® screws or GIB® Grabber® Dual Thread screws at 150mm to perimeter
5. Centre of the sheet may be fixed with adhesive or fastenings at 300mm
6. Panel hold downs required
7. Joints and fastener heads must be stopped
8. GIB® tape must be used in joints
9. Sheets may be fixed horizontally or vertically

Bracing Element – Plasterboard side shown

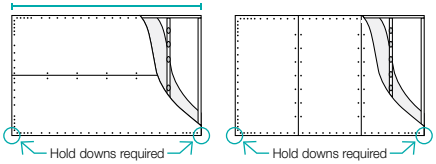

Horizontal Fixing | Vertical Fixing

BP-H

1. 10mm or 13mm GIB Braceline® to one side of the wall only
2. 7mm structural plywood to the other side
3. Corner fastening pattern applies (see p. 65)
4. 32 x 6g GIB® Grabber® screws or GIB® Grabber® Dual Thread screws at 150mm to perimeter (plasterboard side). 50 x 2.8mm FH nails at 150mm to plywood perimeter. Corner fastening pattern not applicable (plywood side)
5. Panel hold downs required
6. Centre of the sheet may be fixed with adhesive or fastenings at 300mm
7. Joints and fastener heads must be stopped
8. GIB® tape must be used in joints
9. Sheets may be fixed horizontally or vertically

Bracing Element – Plasterboard side shown

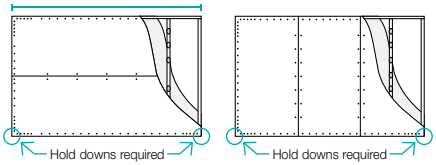

Horizontal Fixing | Vertical Fixing

For sheet substitution options refer to p. 14.

KDC - Approved Building Consent Document - BC210441 - Pg 321 of 512 - 30/08/2021 - Comply NZ

3.13 Bottom Plate Fixing

Bottom Plate Fixings for GIB® Bracing Elements

Brace Type	Concrete Slabs		Timber Floors
	External Walls	Internal Walls	External and Internal Walls
GS1-N	As per NZS 3604:2011 No specific additional fastening required	As per NZS 3604:2011 Alternatively use 75 x 3.8mm shot-fired fasteners with 16mm discs, 150mm and 300mm from each end of the bracing element and at 600mm thereafter.	Pairs of 100 x 3.75mm flat head hand driven nails or 3/90 x 3.15mm power driven nails at 600mm centres in accordance with NZS 3604:2011
GS2-N GS2-NOM	Not applicable		
GSP-H BL1-H BLP-H	Intermediate fastenings to comply with NZS 3604:2011 In addition: GIB HandiBrac® fixings or metal wrap-around strap fixings and bolt as illustrated on p. 63–64		Pairs of 100 x 3.75mm flat head hand driven nails or 3/90 x 3.15mm power driven nails at 600mm centres in accordance with NZS 3604:2011 In addition: GIB HandiBrac® fixings or metal wrap-around strap fixings and bolt as illustrated below
BLG-H	Not applicable	As for GSP-H, BL1-H, BLP-H on concrete slab as illustrated on p. 63 & 64	

3.14 Panel Hold-Down Details

GIB HandiBrac® – Recommended Method

- Developed in conjunction with MiTek™ NZ, the GIB HandiBrac® has been designed and tested for use as a hold-down in GIB® BL and GSP bracing elements.
- The GIB HandiBrac® registered design provides for quick and easy installation
- The GIB HandiBrac® provides a flush surface for the wall linings because it is fitted inside the framing. There is no need to check into the framing as recommended with conventional straps
- The GIB HandiBrac® is suitable for both new and retrofit construction
- The design also allows for installation and inspection at any stage prior to fitting internal linings

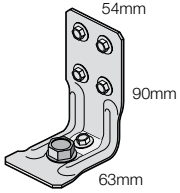

Concrete Floors		Timber Floors	
External Walls	Internal Walls	External Walls	Internal Walls
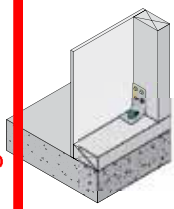	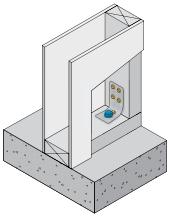	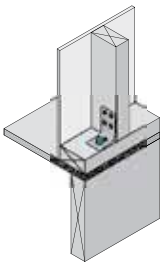	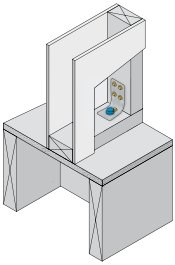
Position GIB HandiBrac® as close as practicable to the internal edge of the bottom plate	Position GIB HandiBrac® at the stud / plate junction	Position GIB HandiBrac® in the centre of the perimeter boundary joist	Position GIB HandiBrac® in the centre of floor joist or full depth solid block

Hold-Down Fastener Requirements

A mechanical fastening with a minimum characteristic uplift capacity of 15kN or use supplied BT 10/140 screw bolt in GIB HandiBrac® pack.	12 x 150mm galvanised coach screw or use supplied BT 10/140 screw bolt in GIB HandiBrac® pack.

KDC - Approved Building Consent Document - BC210441 - Pg 322 of 512 - 30/08/2021 - ComplyNZ

Bracing Strap Installation

Care needs to be taken with the installation of the bracing strap. It should be checked in to be flush with the face of the stud providing a flat substrate for the plasterboard. It should be positioned in such a way that the important corner fastenings of the bracing element are not affected by it. Keeping the strap to the edge of the end stud as shown will allow the important corner fastenings to be installed without having to penetrate the bracing strap.

Concrete Floors	Timber Floors
400 x 25 x 0.9mm galvanised strap to pass under the plate and up the other side of the stud. Six 30 x 2.5 flat head galvanised nails to each side of the stud. Three 30 x 2.5 flat head galvanised nails to each side of the plate. Hold down bolt with 50 x 50 x 3mm washer to be fitted within 80mm of the edge of the element.	

Internal Walls	External Walls	Internal Walls	External Walls
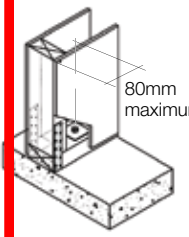	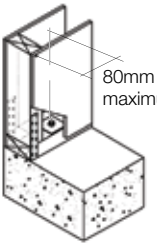	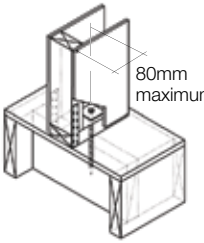	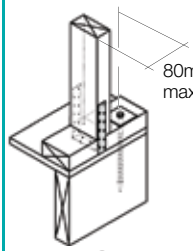 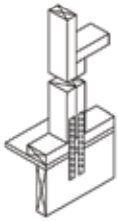 2/300 x 25 x 0.9mm galvanised straps with six 30 x 2.5mm flat head galvanised nails to each stud and into the floor joist and three nails to the plate. Block to nog fixed with 3/100 x 3.75mm nails to stud.

Hold-Down Fastener Requirements

Concrete Floors	Timber Floors
A mechanical fastening with a minimum characteristic uplift capacity of 15kN fitted with a 50 x 50 x 3mm square washer within 80mm of the ends of the bracing element.	12 x 150mm galvanised coach screw fitted with a 50 x 50 x 3mm square washer within 80mm of the ends of the bracing element.

KDC - Approved Building Consent Document - BC210441 - Pg 323 of 512 - 30/08/2021 - Comply NZ

5.1.5 GIB EzyBrace® Corner Fastener Pattern

Corner Fastener Pattern for ALL 4 CORNERS OF GIB® Bracing Elements (excluding GS2-NOM).

— All four corners of a GIB® plasterboard bracing element must be fastened as per the fastening patterns shown below

— Bracing element perimeter is then fastened at 150mm centres, or for GS2-NOM 300mm centres

— Fasteners must be no closer than 12mm from the paper enclosed edge and no closer than 18mm from sheet ends or cut edges of sheets

GIB EzyBrace® Corner Fastener Pattern

Unless specified all fastener spacings are maximums.

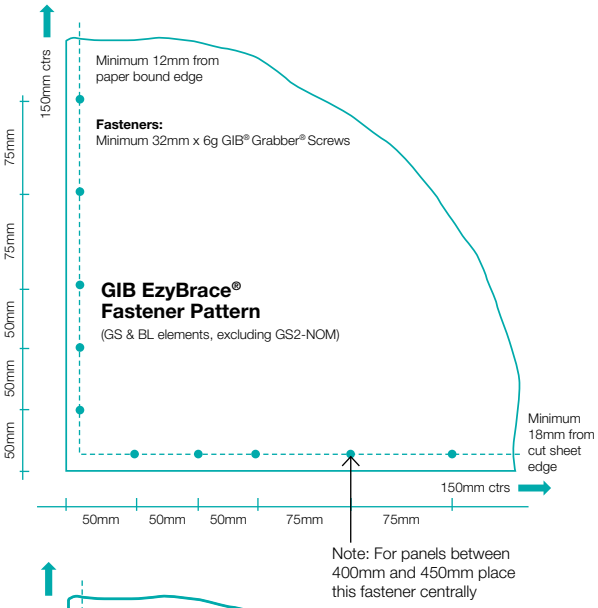

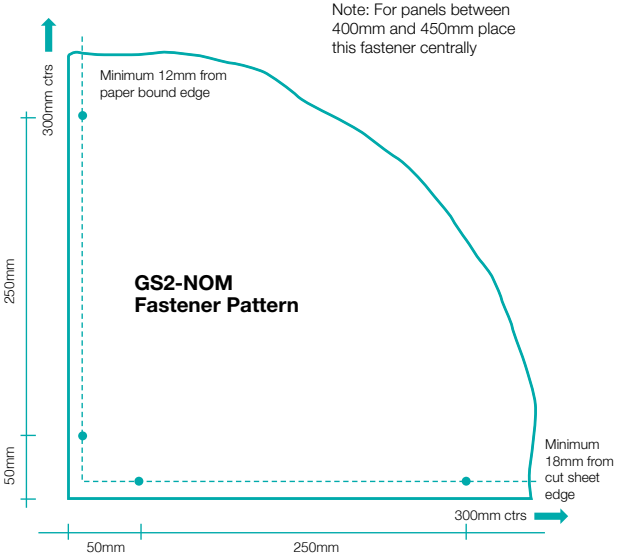

KDC - Approved Building Consent Document - BC210441 - Pg 324 of 512 - 30/08/2021 - Comply NZ

5.1.6 Permitted GIB EzyBrace® Plasterboard Substitutions

Refer to p. 14 for GIB® plasterboard substitutions in GIB EzyBrace® systems

5.1.7 General Installation Details

- Timber framing to comply with NZS 3604:2011
- Minimum stud dimensions:
  - External walls – 90 x 35mm
  - Internal walls – 70 x 45mm
- Use full sheets where possible
- If part sheets are required a minimum dimension of 300mm applies for all bracing elements
- All joints and fastener heads in GIB EzyBrace® Systems must be stopped. GIB® tape must be used in joints

Bracing in Wet Areas

GIB EzyBrace® Systems are not to be installed inside shower cubicles or around baths.

Outside of these areas it is acceptable to use GIB EzyBrace® Systems in bathrooms and other wet areas provided that the surface of the element is maintained impervious for the life of the building.

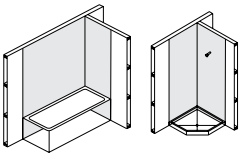

No bracing in shaded areas

Small Openings in Bracing Elements

Small openings (e.g. power outlets) of 90 x 90mm maximum or circular holes no more than 100mm may be placed no closer than 90mm to the edge of the braced element. A block may need to be provided alongside the perimeter stud as shown below.

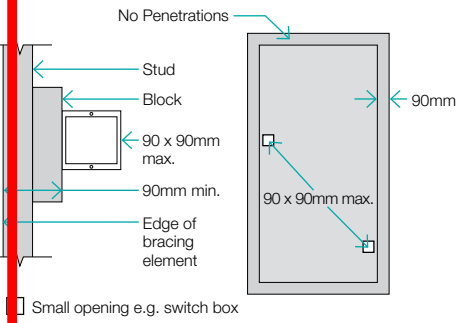

Large Openings in Bracing Elements

For openings above 90 x 90mm such as switch boards, recessed cabinets and TV's etc. should be placed outside of the bracing element or locate the bracing element on the other side of the wall framing.

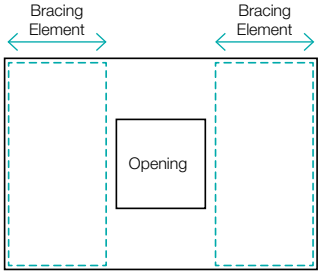

Intersecting Walls

GIB® Bracing Elements may have intersecting walls with a minimum length of 200mm. Fasteners are required around the perimeter of the bracing element. Vertical joints at T-junctions shall be fixed and jointed as specified for intermediate sheet joints. The bracing element length must be no less than 900mm.

Where a Wall Bracing Element is interrupted by a T-junction the element is deemed to be continuous for the whole length (900mm minimum in the example illustrated).

When fixing part sheets of GIB® plasterboard to the side of a T-junction, a minimum width of 300mm applies for bracing elements. See figures on p. 67.

KDC - Approved Building Consent Document - BC210441 - Pg 325 of 512 - 30/08/2021 - Comply NZ

9.17 General Installation Details

Intersecting Walls

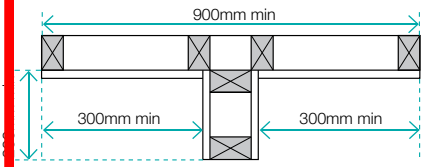

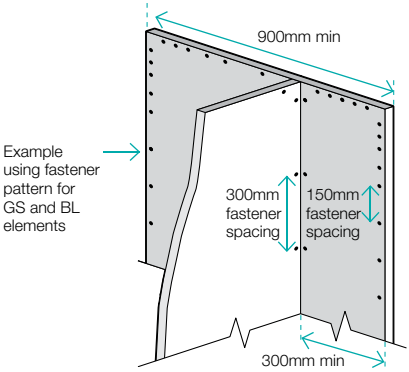

Junction
Minimum 32mm x 6g GIB® Grabber® High Thread or 32mm x 7g GIB® Grabber® Dual Thread Screws at 300mm centres each side

Top Plate Connections

For top plate connection refer to NZS3604:2011 section 8.7.3.

Parapets and Gable End Walls

Bracing elements must be fixed from top plate to bottom plate. Fixing to a row of nogs is not acceptable unless either:

A continuous member such as an 90 x 45mm ribbon plate is fixed across the studs just above a row of nogs at the ceiling line;

Or

GIBFix® Angle is installed as shown. The angle is fixed to a row of nogs with 30 x 2.5mm galvanised flat head nails at 300mm centres.

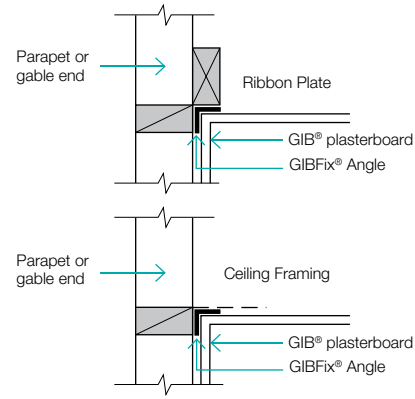

Screw and Adhesive Fix for Openings - GS2-NOM Only

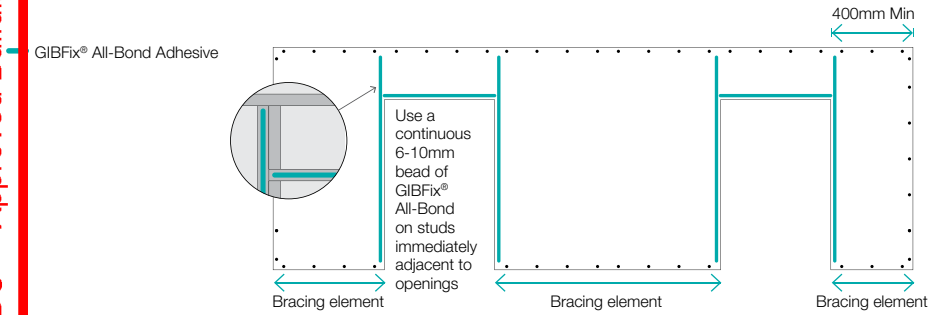

KDC - Approved Building Consent Document - BC210441 - Pg 326 of 512 - 30/08/2021 - Comply NZ

5.18 Ceiling Diaphragms

Ceiling diaphragms do not have a bracing unit rating but are used when bracing lines are spaced further than 6.0m apart.

Any 10mm or 13mm GIB® plasterboard can be used for ceiling diaphragms.

Ceiling Diaphragms

Small Openings

Small opening (e.g. down lights) of 90 x 90mm or less may be placed no closer than 90mm to the edge of the ceiling diaphragm.

Large Openings

Openings are allowed within the middle third of the diaphragms length and width. Fixing of sheet material to opening trimmers shall be at 150mm centres. Neither opening dimension shall exceed a third of the diaphragm width. Larger openings or openings in other locations require specific engineering design.

Where fireplace flue or range hood openings are required in a ceiling diaphragm the use of a galvanised metal backing plate is recommended, with a maximum hole diameter of 350mm.

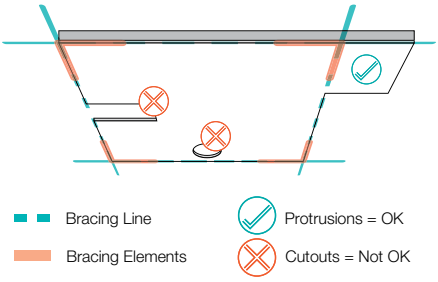

Use full width sheets where possible.

Maximum length sheet – 1.8m

Maximum width sheet – 900mm

Sheets less than 900mm in width but no less than 600mm may be used provided that the sheet edge joint is fully back blocked.

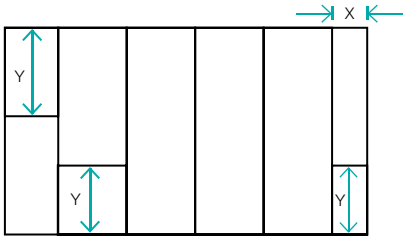

X = 900mm min or 600-900mm min provided all adjacent joints are back-blocked

Y = 1800mm min sheet lengths at ends of ceiling diaphragms

Ceiling diaphragms may be constructed using any GIB® plasterboard provided perimeter fixing is at;

150mm centres for: Diaphragms up to 7.5m in length, no steeper than 15°.

100mm centres for: Diaphragms up to 7.5m in length, no steeper than 45°. Diaphragms up to 12m in length, no steeper than 25°.

Diaphragms outside these parameters must be specifically designed.

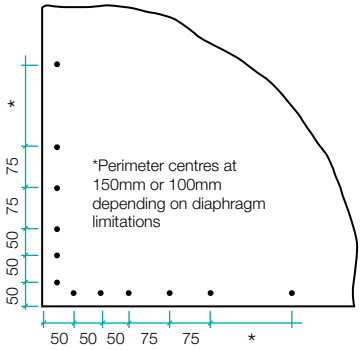

All fastener spacings are maximums

KDC - Approved Building Consent Document - BC210441 - Pg 327 of 512 - 30/08/2021 - Comply NZ

Ceiling Diaphragms

GIB® Rondo® 310 metal ceiling battens may be used if fixed directly through the flanges into the ceiling framing using 2/32mm x 8g wafer head screws.

If the 310 ceiling battens are required to be clip fixed, a block or continuous timber member must be securely attached to the ceiling framing at the level of the back of the metal batten. The batten is then fastened to this timber as shown.

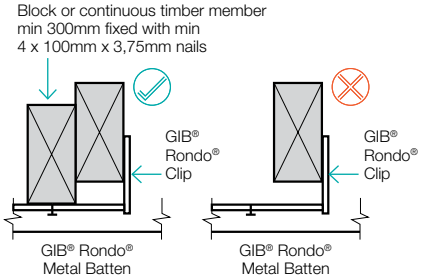

For steel battens a continuous channel or angle is required to the perimeter of the diaphragm.

This shall be fastened to the framing with GIB® Grabber® 32mm x 8g wafer head screws at 300mm centres.

Battens shall be fixed to the channel with 32 x 8g GIB® Grabber® wafer head screws.

It is important that a positive connection is created between the top plate and the ceiling substrate.

Curved ceiling diaphragms can be achieved by attaching a folded metal angle to the junctions.

- Minimum .55mm BMT with 100mm each leg
- Fastened at 300mm centres on each edge using 32mm x 6g GIB® wafer head screws

Linings shall be fixed to both sides of the metal angle at 150mm or 100mm centres with minimum 25mm x 6g GIB® Grabber® self-tapping screws

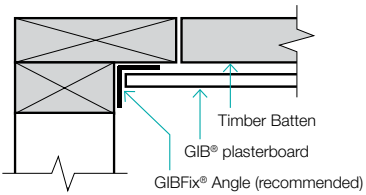

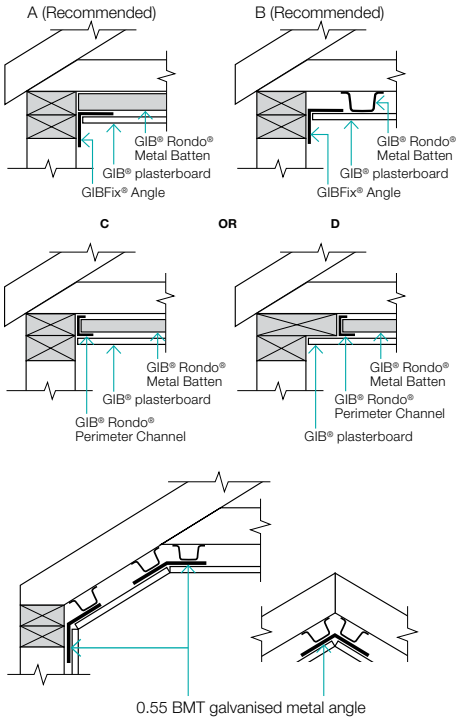

General installation

- Sheet end butt joints must be formed off framing and back-blocked (see p. 47)
- Framing and ceiling batten requirements for ceiling diaphragms are the same as for general ceiling installation (see p. 45)
- The body of the ceiling shall be fixed as per general ceiling installation (see p. 45)
- Openings and penetrations in ceiling diaphragms are as for wall bracing (see p. 66)
- Linings shall be installed over the entire area of the diaphragm
- Joints and fastener heads must be stopped. GIB® tape must be used in joints

2.2 GIB AQUALINE® WET AREA SYSTEMS

This section covers the installation of GIB Aqualine® Wet Area Systems. Full information can be found in the GIB Aqualine® Wet Area Systems literature.

GIB Aqualine®

GIB Aqualine®, with its green face paper, has a water resistant core which will provide resistance to the effects of moisture in wet areas such as bathrooms and laundries.

Although able to cope with infrequent short-term exposure, standard gypsum plasterboard will have a shortened life expectancy when frequently exposed to water or moisture.

The NZBC does not call for water resistant linings in wet areas but it is highly desirable to incorporate lining materials which will maintain their integrity longer when exposed more frequently to water or steam and particularly to one-off events such as leakages or flooding of a room.

Limitations

- Do not use GIB Aqualine® in situations where it is exposed for extended periods to humidities of 90% RH or greater. Such areas include group shower rooms, as well as moisture and chlorine laden environments such as indoor heated swimming pools
- GIB Aqualine® must not be installed in exterior situations
- GIB Aqualine® must not be directly applied to solid plaster (gypsum or cement) wood based sheet linings or similar materials, masonry or concrete. GIB Aqualine® may only be applied to these materials where timber strapping or steel furring channels are installed
- GIB Aqualine® must not be installed over a vapour barrier or a wall acting as a vapour barrier
- GIB Aqualine® must not be used for bracing purposes in shower cubicles or over baths

NZBC Clauses E3 Internal Moisture

E3.3.4 requires impervious and easily cleaned surfaces to all surfaces adjacent to sanitary fixtures or laundering facilities.

E3.3.5 requires that surfaces of building elements likely to be splashed or contaminated in the course of the intended use of the building, must also be impervious and easily cleaned.

E3.3.6 requires that surfaces of building elements likely to be splashed must be constructed in a way that prevents water from penetrating behind linings or into concealed spaces (e.g. wall cavities).

Walls in wet areas therefore need to be addressed according to whether they fall within the scope of one of the following descriptions:

1. Wall surface likely to be splashed
2. Wall surfaces directly exposed to water e.g. shower walls

Although not a requirement of NZBC it is highly recommended that the wall surfaces within 150mm of the top edge of a bath, and the vertical faces immediately under the edge of a bath, are treated in the same way as for a shower wall.

KDC - Approved Building Consent Document - BC210441 - Pg 328 of 512 - 30/08/2021 - Comply NZ

KDC - Approved Building Consent Document - BC210441 - Pg 329 of 512 - 30/08/2021 - Comply NZ

3.2.1 Surface in Showers and Around Baths

A waterproof membrane complying with NZS 4858 MUST be applied to all lining materials used under ceramic tiles in these areas.

The waterproof membrane must extend to a 1500mm horizontal radius from a shower rose unless the shower is contained within a fixed enclosure. A shower curtain does not constitute a fixed enclosure.

Particleboard flooring manufacturers recommend that in wet areas, panels should be protected with a suitable wet area membrane or an integrally waterproof sheet material. Some local authorities call for this treatment on all timber based floors. Local requirements should be checked before proceeding.

Dark grey shaded areas in the diagrams below represent the minimum extent of wall surfaces requiring impervious sheet materials or waterproof membranes prior to tiling. Light grey shaded areas represent best practice.

Enclosed shower over bath

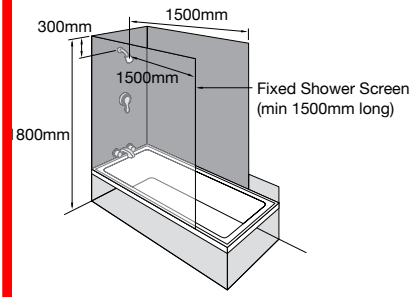

Unenclosed shower over bath

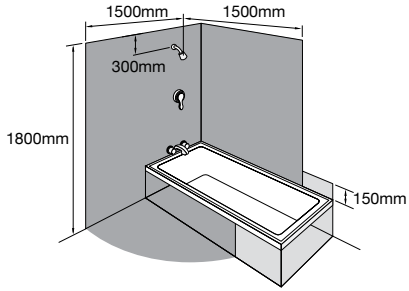

Enclosed Shower

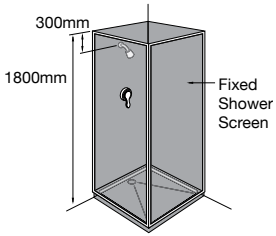

Unenclosed shower

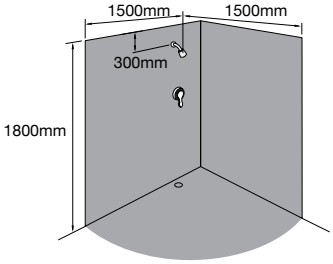

Bath

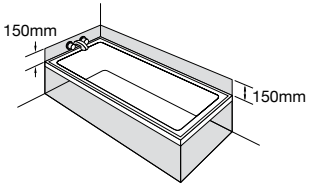

Code requirements

Best practice

KDC - Approved Building Consent Document - BC210441 - Pg 230 of 512 - 30/08/2021 - CompliNZ

6.2.2 Fixing Details for Non Tiled Walls

As for general installation details (see p. 38–41)

Ceilings

Battens or ceiling joists shall be spaced at 450mm centres maximum for 10mm GIB Aqualine® and 600mm centres maximum for 13mm GIB Aqualine®.

Ceiling Fixing

Fixing as for GIB® Standard plasterboard (see p. 45)

Jointing

All sheet joints must be GIB® tape reinforced and stopped in accordance with instructions on p. 83.

6.2.3 Fixing Details for Tiled Walls

Wall Framing

Timber Framing dimensions and spacings must comply with the requirements of NZS 3604:2011.

Prior to lining in tiled areas (shower cubicles and shower over bath only) the internal corners shall be reinforced with a minimum 32mm x 32mm angle such as NZ18 or GIBFix® Angle. Each side of the angle shall be fastened to the framing with 30mm galvanised clouts at 300mm centres (see p. 74).

Steel stud systems are proprietary but do not generally incorporate nogs except as required below:

- Adjacent to each pipe penetration and behind sink and tub flashings
- Between all studs above bath flanges and preformed shower bases
- To support towel rails, grab rails and wall basin brackets
- For impact protection in shower cubicles or shower over bath situations it is important that all sheet joints are made on solid blocking. This may either require vertical fixing of the GIB Aqualine® or the installation of some additional nogs

Lining and Tile Weights

- 10mm or 13mm GIB Aqualine® is recommended for use on timber or steel framing and for tile weights up to 20kg/m^2
- 13mm GIB Aqualine® must be used for tile weights between 20 and 32kg/m^2 and when steel framing has been used
- GIB® Grabber® Drywall Screws at 100mm centres to perimeter of tiled wall and to all intermediate studs
- For 10mm GIB Aqualine® use minimum 25mm x 6g GIB® Grabber® Drywall Screws
- For 13mm GIB Aqualine® use minimum 32mm x 6g GIB® Grabber® Drywall Screws
- GIB Aqualine® may be fixed vertically or horizontally
- Provide a 5mm–10mm gap at the wall/floor junction
- Provide a 5mm–10mm gap between the bottom edge of the GIB Aqualine® and any bath rim or preformed shower base to allow for placement of sealant
- GIB Aqualine® sheets shall be touch fitted
- Where the framing or fastener centres required for tiled GIB Aqualine® are closer than those specified for GIB® Fire Rated and GIB Noise Control® Systems, the GIB Aqualine® specification shall prevail. Where relevant check fastener lengths comply with requirements of GIB® Fire Rated Systems
- Do not fix tiles to GIB® plasterboard ceilings or non-vertical planes

Jointing

- Jointing shall be carried out in accordance with instructions on p. 85
- No joint compound is required under impervious shower linings
- Air drying compounds shall not be used on areas that are to be tiled

Fastening the Linings – Horizontal Fixing in Tiled Areas

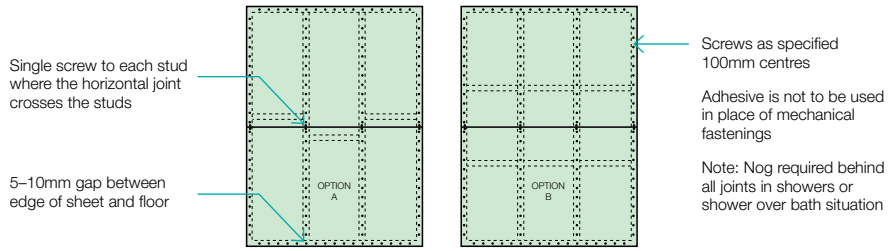

KDC - Approved Building Consent Document - BC210441 - Pg 331 of 512 - 30/08/2021 - Comply NZ

9.2.4 Tiling, Flexible Sheet Vinyl and Rigid Sheet Shower Linings

Tiling

- Tile grouting and sealing shall be carried out in accordance with the requirements of AS3958.1 2007 (Guide to the Installation of Ceramic Tiles)
- Provide for surface control joints at 4m centres maximum
- The adhesive shall be organic based complying with AS2358 – 1990 (Adhesives for Fixing Ceramic Tiles)
- Note that the adhesive should be combed in a horizontal direction only. It is important that adhesive is applied to the wall and not "buttered" onto individual tiles

Flexible Sheet Vinyl – Showers and Other Wet Areas

- GIB Aqualine® is a suitable substrate for flexible vinyl wall finishes in wet areas of residential, commercial or institutional buildings
- Framing requirements and installation procedures for the GIB Aqualine® substrate shall be as per p. 72, except that the lining gap at the floor is reduced to 5mm when a pencil cove detail is used
- The installation of metal reinforcing angles (minimum. 32 x 32 x 0.55mm) behind internal GIB Aqualine® corners is recommended for sheet vinyl applications in showers or shower over bath situations (see illustration p. 74)
- The GIB Aqualine® lining must be jointed and stopped to a paint quality finish (Level 4) – trowel marks can telegraph through even a commercial grade 2mm vinyl
- A minimum vinyl thickness of 2mm is recommended for the wall finish in commercial or institutional bathrooms and showers
- In areas directly exposed to liquid water, all joints in flexible sheet vinyl must be heat welded
- Installation of the flexible vinyl must be carried out strictly in accordance with the specifications provided by the suppliers/ manufacturers of the vinyl

Rigid Sheet Shower Linings

- The manufacturers/suppliers of thin (usually 2mm–3mm) and rigid acrylic shower linings commonly recommend direct adhesive fixing to wall linings using solvent-based adhesives
- Do not pre-seal areas which are to be covered by the rigid shower linings
- Some suppliers of rigid sheet acrylic shower linings recommend a minimum of one week for the adhesive to cure fully prior to use
- Water temperature changes will cause movement of the thin acrylic sheet, which in turn will stress the adhesive and wall lining substrate
- Care must be taken to ensure that rooms are adequately ventilated and the adhesive is fully cured before the shower is used
- Consult the manufacturer/supplier of the shower lining for full installation details

Waterproof Membranes (tiled shower areas and shower over baths)

- In showers and shower over bath situations the GIB Aqualine® system is not complete and ready for tiling until coated with a waterproof membrane over the lining and the jointed areas
- Only in-situ waterproofing materials which are manufactured to AS/NZS 4858:2004 Wet Area Membranes Requirements are recommended.
- Waterproof membranes must be fully cured and dry prior to application of tiling adhesives
- Embed reinforcing mats in the membrane at all internal corners of the shower (including floor/wall junctions)

For further information on waterproof membranes prior to tiling, consult BRANZ GOOD PRACTICE GUIDE TILING.

KDC - Approved Building Consent Document - BC210441 - Pg 332 of 512 - 30/08/2021 - CompliNZ

3.2.5 Typical Construction Details

FIG. B: Typical Details for Tiled Shower over Bath

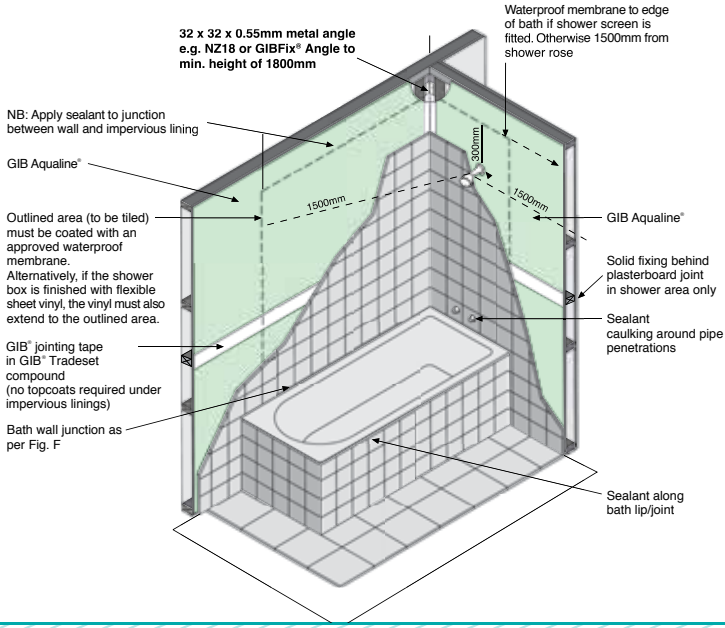

FIG. C: Typical Details for Tiled Shower Enclosure

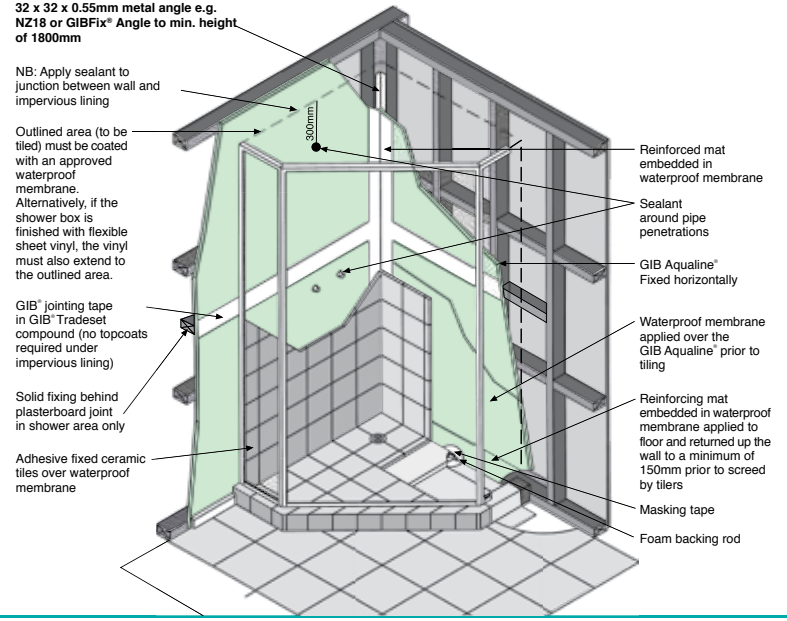

KDC - Approved Building Consent Document - BC210441 - Pg 333 of 512 - 30/08/2021 - CompliNZ

3.2.5 Typical Construction Details

FIG. D: Typical shower edge detail

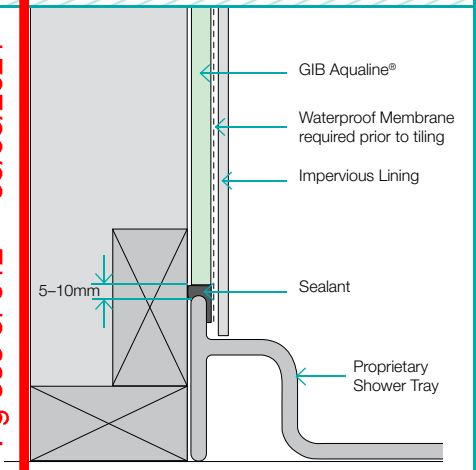

FIG. E: Typical shower edge detail in fire or noise control area

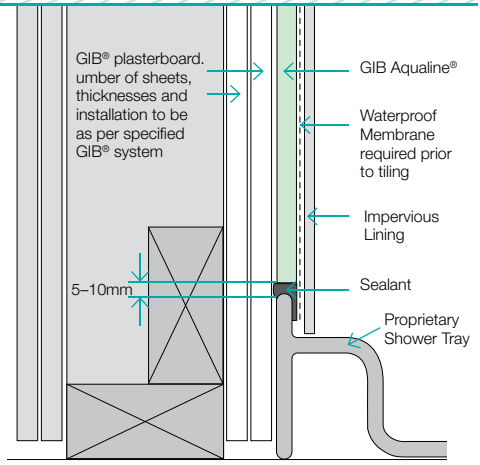

FIG. F: Typical bath edge detail

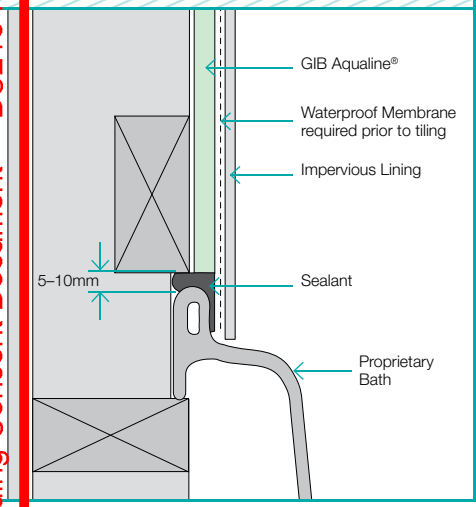

FIG. G: Typical bath edge detail in fire or noise control area

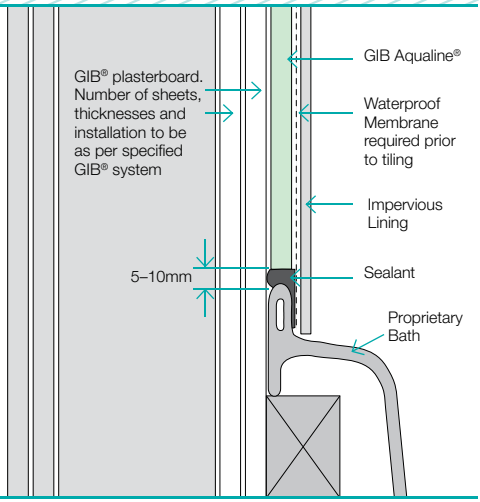

As the edge profiles of showers and baths can vary significantly between manufacturers, these details are intended only as a guide. Attention should be paid to ensure that:

- Sufficient sealant to effect a waterproof barrier has been used
- The sealant has been applied in a manner that does not permit water ingress

Note: The gap between the front face of the shower/bath upstand and the front face of the GIB Aqualine® should be 1mm–4mm. This may require additional packing behind final layer of GIB Aqualine® OR checking shower tray or bath into framing.

Silicone sealants must be of the mould inhibiting type and must be compatible with GIB Aqualine®, shower/bath surfaces and the impervious lining.

KDC - Approved Building Consent Document - BC210441 - Pg 334 of 512 - 30/08/2021 - Comply NZ

3.2.5 Typical Construction Details

It is recommended that GIB Aqualine® is fixed to ceilings in wet areas such as bathrooms and laundries. Installation is the same as for standard ceiling. See p. 45.

FIG. H: Typical Plumbing Penetration

Penetrations in wet areas should be sealed with silicon sealant to prevent moisture access to the framing.

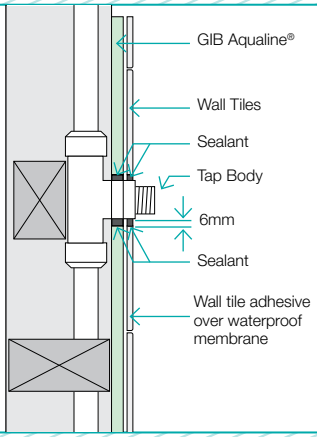

FIG. I: Sealing Under Mixer Facia

Apply a bead of sealant behind the cover plate on shower mixer to divert any water from the penetration.

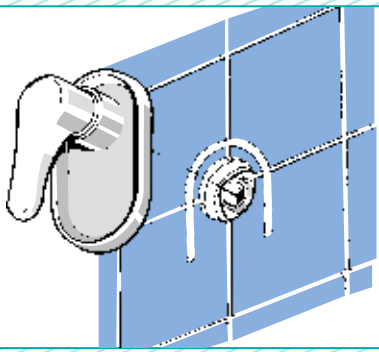

FIG. J: Tiled Shower – Internal Corner Detail

Edge profiles of baths and shower trays can vary significantly between manufacturers. Always follow the manufacturers installation instructions.

The details shown are intended as a guide only.

Allow 5mm–10mm gap between bath rim and/or shower base to allow for installation of sealant.

Sealants should contain a mould inhibitor.

Ensure that the gap is well filled with sealant.

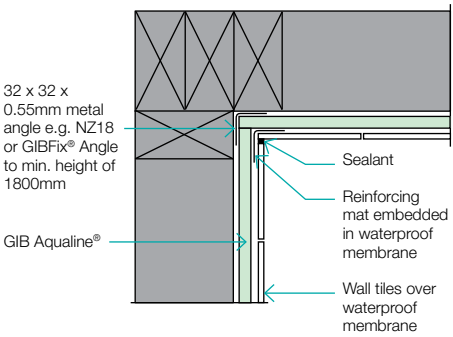

KDC - Approved Building Consent Document - BC210441 - Pg 335 of 512 - 30/08/2021 - ComplyNZ

5.3 GIB® FIRE, NOISE AND OTHER PERFORMANCE SYSTEMS

Because of the volume of information it is not feasible to include installation guidance for all the GIB® Performance Systems in the GIB® Site Guide. If you are installing GIB® Performance Systems including GIB® Fire, Noise, Tough or Intertenancy systems it is strongly recommended that you obtain a copy of the relevant specification and installation publication prior to commencing installation.

These can be easily accessed by:

- Download from gib.co.nz
- Download the GIB® App available free from the App or Google Play Stores
- Contact the GIB® Helpline on 0800 100 442
- Or from most GIB® plasterboard stockists

5.3.1 GIB® Fire Rated Systems

The NZBC requires fire safety systems to reduce the risk of injury or death, and to protect adjacent property in a fire situation.

Fire rated systems require attention to the details in the GIB® Fire Rated Systems literature.

Deviating from these specifications can invalidate the system leading to expensive remedial work to comply or increased risk in case of fire.

A fire system is NOT simply a matter of fixing GIB Fyreline® instead of another GIB® plasterboard.

The fire resistance rating can only be assured when the board has been installed strictly in accordance with the relevant instructions in the GIB® Fire Rated Systems literature.

5.3.2 GIB Noise Control® Systems

Noise control for Intertenancy situations is comprehensively covered in GIB Noise Control® Systems literature. As these situations are generally subject to building code requirements it is important that the publication is consulted to design and construct Intertenancy noise control systems.

Sound Transmission Class (STC)
STC relates to airborne noise such as speech, TV and so on. It is the ability of a wall, ceiling, or floor/ceiling to reduce noise from rooms next door. In general a higher STC means a better performance.

STC 35 – Normal speech may be clearly heard in the next room

STC 45 – Muffled speech may be heard in the next room

STC 55 – Minimum building code requirement for Intertenancy walls

Impact Insulation Class (IIC)
IIC measures the ability of a floor or ceiling system to reduce noise resulting from impacts such as footsteps, falling objects and moving furniture. A higher IIC means a better performance. Impact noises easily travel from hard surfaces into the structure and to the room below. Hard surfaces such as finished timber floors and ceramic tiles often cause noise transmission to the room below. Semi-hard surfaces such as cork tiles and flooring grade vinyl perform a little better, but still do not efficiently absorb impact energy. Installing carpet and underlay is an effective way of reducing impact noise. Installing a GIB Noise Control® System will help reduce impact and airborne noise levels.

Substitution
GIB Noise Control® Systems are not generic. It is important that only GIB® branded components are used when specifying and installing GIB Noise Control® Systems. Substitution is not in accordance with GIB® Systems recommendations and is at the risk of the owner, specifier or builder.

6.0 JOINTING AND FINISHING SYSTEMS

Jointing and finishing of GIB® plasterboard is to be as per instructions to meet requirements of AS/NZS 2589:2017.

This section covers the basics of joint construction and finishing.

For details on the full GIB® compound and accessory range refer to p. 19–24.

Note: The use of correct GIB® materials and practices is critical to delivering adequate joint strength and resistance to cracking which in turn contributes to the performance of GIB® plasterboard bracing systems.

6.1 JOINTING – MATERIALS

GIB® Jointing Tapes

GIB® Paper Tape provides reinforcing and resistance to joint cracking. It is pre-creased for use in internal corners. The rougher side of the tape must face the wall surface when bedded in to the jointing compound.

GIB RocTape® is a fibreglass mesh tape suitable for flat joints.

Jointing Compounds.

There are two general types of jointing compound:

Plaster Based (Setting Compounds)

These compounds are powders based on plaster of paris. They have a specific working time before they start to set and harden when mixed with water in the recommended ratio.

Once the set time is reached, the product begins to harden as a result of chemical reaction between the plaster with water.

Plaster based compounds are mixed on site, enabling viscosity to be adjusted as it's mixed so that it's suitable for the chosen application method.

Product examples: GIB Tradeset® range (different set times), GIB Lite Blue® and GIB MaxSet®. Refer to p. 19–21 for details.

Air Drying Compounds

These compounds are pre-mixed pastes and are ready to use direct from their pails. They do not set but rather rely on evaporation of water to enable their polymer binder to cure.

These products are generally formulated to be softer and easier to sand, so are normally used for the third or top coat. Some air drying compounds are designed as multi-purpose so they can be used for all three coats. Please consult p. 19–21 before using a three-coat air drying compound system.

GIB® Jointing Tapes



Plaster Based Jointing Compounds



Air Drying Jointing Compounds



KDC - Approved Building Consent Document - BC210441 - Pg 336 of 512 - 30/08/2021 - ComplyNZ

Product examples: GIB Trade Finish® range (Heavy Weight, Multi, Lite and Extra Lite), GIB Plus 4® or GIB Redifilla® range.

Refer to p. 19–21 for details of each compound's performance.

6.2 DETERMINING HOW MUCH YOU NEED

The table below gives the approximate usage rates for some joint compounds. These figures are approximate and will vary depending on wastage and the actual thickness at which the product is applied.

APPROXIMATE COVERAGE OF JOINT COMPOUNDS

Coverage in lineal metres per package size

2 coats (taping plus second coat)	
GIB Tradeset®	200m (per 20kg bag)
GIB MaxSet®	260m (per 20kg bag)
GIB X-Block®	90m (per 25kg bag)
Second coat only	
GIB Lite Blue®	330m (per 17.5kg bag)
Top coat only	
GIB Plus 4®	75m (per 15L pail)
GIB Trade Finish® Heavy	70m (per 15L pail)
GIB Trade Finish® Multi	75m (per 15L pail)
GIB Trade Finish® Lite	75m (per 15L pail)
GIB Trade Finish® Extra Lite	75m (per 15L pail)
GIB® U-Mix Finishing Compound	375m (per 20kg bag)
All three coats (taping plus two coats)	
GIB Plus 4®	50m (per 15L pail)
GIB Trade Finish® Multi	50m (per 15L pail)
GIB Trade Finish® Lite	50m (per 15L pail)
GIB Trade Finish® Extra Lite	50m (per 15L pail)

A skim coat at 1mm thick yields approximately 10m^2 per kg.

Note: These are estimated quantities, and can vary significantly due to site conditions and fixing practices. They are intended as a rough guide and should not be used for quoting purposes.

KDC - Approved Building Consent Document - BC210441 - Pg 337 of 512 - 30/08/2021 - ComplyNZ

3.3 WEATHER AND VENTILATION

Weather Conditions

Understanding the part that weather conditions play in joint construction is critical for the creation of trouble free joints.

Cool Weather

In cool weather the rate of drying drops dramatically so achieving a dry coating in a commercially acceptable time becomes an issue. Under these conditions a thick coating of air drying compound also results in longer drying times, so most stoppers use a setting compound for the first and second coats followed by a thin top coat of an air drying compound.

As the overall amount of drying is diminished under cool weather conditions, it is wise to use a harder sanding finishing compound such as GIB Trade Finish® Multi, or GIB Trade Finish® Heavy which will sand with less risk of scratching or “swirling”.

In cold weather, issues such as partial freezing of the mixing water can result in poor feathered edge adhesion. Do not use below the minimum temperature stated on the bag or pail. The biggest issue here is the speed of drying of plaster. If it has not dried before the next coat is applied, it will shrink, and the result can be delayed shrinkage and hollow joints.

To minimise the above issues, the building needs a source of heating. One option is placement of one 1kW fan heater every 50m^2 of floor area. This will create slight air movement and take the chill off the air, thereby creating conditions more favourable to drying at a reasonable rate. These provide a gentle uniform heating effect. Always check with the main building contractor before doing this. Check the heater has a thermal overload and always remove all possible sources of combustion (bits of paper etc.) before using.

Try to avoid going above 18–20ºC in any individual room in the building. Rapid drying through excessive heat can cause popping or movement of fasteners and joints.

Note: It is not a good idea to use air drying compounds for all coats in winter in an unheated building. Shrinkage will result if each coat has not dried properly, and the ability to dry in a reasonable time is significantly diminished in this situation.

Hot Weather

This may be defined as ‘any part of the job and/or the air around the area of stopping with a temperature at, or above, 25ºC’.

In these conditions we recommend the use of GIB Tradeset® 90 or shorter set products such as GIB Tradeset® 45. Air drying compounds tend to be good in hot weather and dry out reasonably quickly.

Rooms that heat up to this extent during the morning should be taped in early so that the compound has a chance to fully set.

Digital thermometers are readily available at hardware stores, to accurately measure surface and air temperatures on site for more informed decision making.

Ventilation and Air Drying

Winstone Wallboards recommends:

- At least one window be opened at either end of the building. Even in wet weather this will allow airchanges and some drying throughout the building. The exception to this would be fog and continual rain. In colder weather these air changes are even more critical as the air carries less moisture
- If the building is locked shut with no air movement the air will dry the joints until such time it has reached 100% humidity and then the drying process will stop

KDC - Approved Building Consent Document - BC210441 - Pg 338 of 512 - 30/08/2021 - ComplyNZ

KDC - Approved Building Consent Document - BC210441 - Pg 339 of 512 - 30/08/2021 - ComplyNZ

Examples of Relative Humidity (RH) in New Zealand Homes				
Averages				
Average ambient humidity (approx.)		=	70% RH	
At 70% RH the moisture air can carry		=	30% moisture	
Air temp	RH		Moisture air can carry	
10ºC	70%	=	2.7g /m^3	
20ºC	70%	=	5.1g /m^3	
Typical house example				
Floor Area		=	190m^2	
Cubic volume		=	450m^3 (approx.)	
Plaster used on house (approx.)		=	100kg	
Water required to mix plaster (approx.)		=	66ltrs	
Water naturally retained in plaster (approx.)		=	10ltrs	
Water to be evaporated from plaster (approx.)		=	56ltrs	
Example #1 – House temp 10C and RH 70%				
House volume multiplied by 450m^3 x 2.7g/m^3		=	1.21kg	
Moisture the air can carry		=	At 10ºC/ 70% RH the maximum moisture the air inside this house can hold is 1.21kg	
Example #2 – House temp 20C and RH 70%				
House volume multiplied by 450m^3 x 5.1g/m		=	2.30kg	
Moisture the air can carry		=	At 20ºC/ 70% RH the maximum moisture the air inside this house can hold is 2.30kg	
Conclusion				
At 20ºC / 70%RH it will take 24 complete air changes to remove the 56ltrs of moisture in this house. However at 10ºC / 70%RH it will take even longer requiring 46 complete air changes.				

Setting Compounds

Plaster based compounds are generally used for the base and the second coats of a plasterboard jointing system.

When the setting compound is mixed with water it forms a paste which can be trowelled to form smooth flat joints and which subsequently sets hard.

Plaster requires a specific amount of water to fully set. In hot weather the mixed compound can dry and the water content can drop below this amount before it starts to set. The longer the compound's set time, the more likely it can dry too much before it sets. When dry, the end result can be a "soft" or "weak" bedding compound, poor tape adhesion and poor resistance to cracking.

Air Drying

To provide better plasterboard surface finish quality, sandable air drying compounds are used as the top coat on jointing systems. Some air drying compounds such as GIB Plus 4® are designed as multi-purpose and can be used for each coat in the entire joint system.

Air drying compounds contain powdered mineral fillers held together with a polymer binder (or glue) in a water emulsion. After applying air drying compound to a plasterboard surface, the water needs to evaporate to create a solid mass. This hardening, unlike setting compounds, is directly related to the speed (and temperature) at which the compound dries out. In winter with poor drying conditions, these products can take a very

KDC - Approved Building Consent Document - BC210441 - Pg 340 of 512 - 30/08/2021 - Comply NZ

GIB

long time to thoroughly dry to a point where they are sandable. If it has not dried in total before painting, the product can shrink.

A minimum temperature is also required in order to form a film to bind the compound together. In most cases the minimum air and compound temperature for satisfactory application and performance of air drying compounds is 10°C.

If the compound dries below this minimum temperature, the end result is likely to be a much softer compound, that scratches readily when sanded, has poor adhesion to underlying compounds and poor paint adhesion properties.

Approximate Drying Times for Air Drying and Setting Compounds

Relative Humidity	Temperature				
	10˚ C	16˚ C	21˚ C	27˚ C	32˚ C
98%	26 days	18 days	12 days	9 days	6 days
94%	10 days	7 days	5 days	3 days	2 days
90%	6 days	4 days	3 days	49 hrs	36 hrs
80%	3 days	2 days	38 hrs	27 hrs	19 hrs
60%	42 hrs	29 hrs	20 hrs	14 hrs	10 hrs
40%	29 hrs	20 hrs	14 hrs	10 hrs	7 hrs

Indicates common weather conditions in New Zealand.
Based on 1.5mm–2mm thickness of wet compound.

Drying And Shrinkage

At the time of usage all jointing compounds will contain water. As the excess water evaporates from the compound, varying degrees of shrinkage occurs depending on the type of compound.

Shrinkage is one of the more common failures seen and is usually the result of a coat of jointing compound not being adequately dried before the next is applied. It is avoidable however!

In general, air drying compounds shrink far more than plaster based compounds generally between 15-25%. As air drying compounds are typically applied quite thin, shrinkage does not tend to detract from the overall joint shape.

Setting compounds can shrink by 8-9% with around half of their shrinkage occurring between application and setting. The rest of the shrinkage occurs during the drying process and after setting. Setting compounds are typically used for the base coats and often are up to 1.4mm deep. Whilst the shrinkage percentage may be lower, the thicker amount means the actual amount of shrinkage can be noticeable.

When all is considered the shrinkage that can occur if a coat is not dry before the next coat is applied is in the order of 0.2mm-0.35mm. These are tiny figures, however are detectable on a generally flat wall and quite obvious in critical or glancing light conditions.

3.4 IDENTIFYING PRODUCT USE BY DATES

5kg Bags and Pails

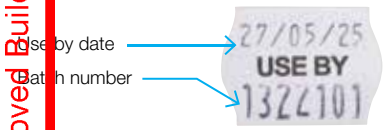

GIB® and Victor Bags

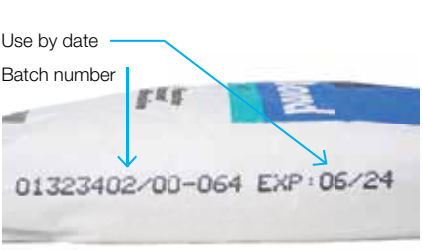

Note: The performance of GIB® and Victor compound products may be compromised if used after the date indicated.

KDC - Approved Building Consent Document - BC210441 - Pg 341 of 512 - 30/08/2021 - ComplyNZ

4.5 STOPPING OF TAPERED OR RECESSED EDGE JOINTS – HAND TOOLS

These are the joints where the two tapered (recessed) edges of plasterboard meet.

Surface Preparation

- Ensure that all fixings, screws or nails, are seated just below the surface of the plasterboard. Any fixings that are driven too far into the plasterboard will cut the paper of the board causing problems such as 'popping' or 'dimpling'
- Remove any dust or loose material from the plasterboard

Mixing Instructions

- Mixing instructions for GIB® compounds can be found on the back of the bag or pail
- If hand mixing, it is better to initially mix a setting compound too thick than too thin and add water to adjust. Adding more powder to a thin mixture tends to create lumps that are difficult to mix in by hand
- If machine mixing with a paddle and drill, use a paddle with vertical sides
- Use a slow speed drill. If possible ensure the entire mixing part of the blade is under the compound whilst it is mixing. This reduces the amount of air stirred in to the product, which in turn reduces the incidence of 'pock marks' and 'pin holes'

Tips

- Paint mixing blades are not recommended (identified by the mixing part which looks like two flat wide curved ribbons). These work well in paint, but tend to mix a lot of air into the (thicker) jointing compounds
- A large battery drill is perfect for slow speed mixing, with less introduction of air to the mix compared to most relatively high speed mains power drills

Surface Preparation

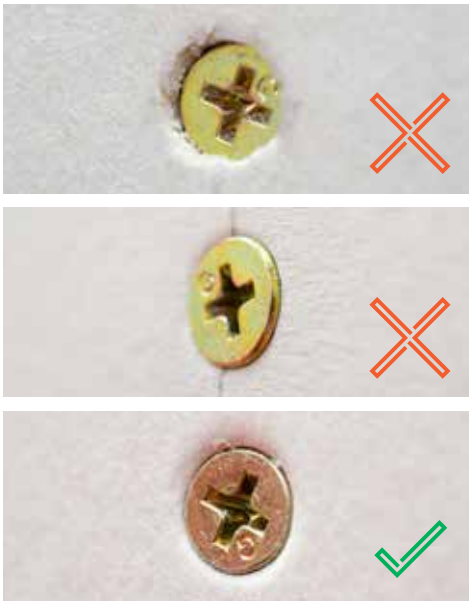

Mixing Compounds



KDC - Approved Building Consent Document - BC210441 - Pg 342 of 512 - 30/08/2021 - ComplyNZ

4.6 JOINTING TECHNIQUES – HAND TOOLS

Tools Required

Some or all of the following tools will be required depending on the work being carried out.

- Rubber Spatula, or similar, for mixing plaster
- Plastic Pail
- 75mm Chamfered Broad-knife
- 100mm Chamfered Broad-knife
- 150mm Broad-knife
- 200mm Trowel (Optional)
- 280mm Trowel
- Sanding Float
- Corner Trowel
- Dust Mask

All tools must be clean and free of any old/set plaster. Remember that as these tools are being used to create a smooth finish, any kinks or scratches in the edge of the tool will cause rough areas in the plaster. To preserve edges, do not use broad-knifes for opening paint cans, etc.



KDC - Approved Building Consent Document - BC210441 - Pg 343 of 512 - 30/08/2021 - ComplyNZ

First (Taping) Coat

Using a 150mm broad-knife, fill the recess formed by the edges of the sheets with GIB® jointing compound.

Centre the GIB® tape along the joint and using a 150mm broad-knife press the tape down into the GIB® compound.

GIB® Paper Joint Tape has two distinct sides. The rougher side, facing out on the roll, is bedded into the compound toward the wall surface. GIB® Paper Joint Tape can be folded for use in internal corners.

GIB RocTape® is installed similar to paper joint tape on flat joints but is not recommended for corner joints.

Draw the broad-knife (held at approximately 45 degrees to the board surface), along the joint to remove any trapped air bubbles beneath the tape.

Ensure that sufficient compound is left behind the tape to achieve a good bond.

Immediately apply a thin coat of compound over the surface of the tape. This reduces the possibility of the tape curling and wrinkling, which can lead to edge cracking.

When the compound is set, scrape back any build-up of compound along the joint.

Allow this coat to dry.



Second Coat

Apply a second coat of jointing compound with a trowel. Ensure that this coat extends at least 25mm beyond the edge of the first coat.

Feather the joints to eliminate build-up of the compound at the edges.

Allow to thoroughly dry (at least 24 hours) and scrape back any build-up of compound along the joint.

If a sandable second coat is desired: use GIB Lite Blue®, an easy sanding plaster-based compound with a 90 minute set time, developed for second coating.



KDC - Approved Building Consent Document - BC210441 - Pg 344 of 512 - 30/08/2021 - ComplyNZ

Top Or Finishing Coat

Apply a finishing coat of GIB® Air Drying compound with a 280mm trowel. Joint edges should be feathered at least 25mm beyond the edges of the previous coat. Allow at least 24 hours to dry.

Using 220 grit sand paper (or finer sandpaper), lightly sand in the same direction as the joint. Take care not to scuff the face paper of the GIB® plasterboard when sanding the joint.

Tip: The finishing compound should not be harder to sand than the second coat. Refer to p. 98



6.7 STOPPING OF END JOINTS / BUTT JOINTS AND CUT EDGES – HAND TOOLS

End Joints / Butt Joints And Cut Edges

- Where possible ensure the plasterboard sheets are fixed so that the butt joint sits mid span and not on framing. If the board is already fixed, use the technique described on p. 47 (where possible) to ensure a joint recess is created
- When jointing two cut edges or sheet ends which are not recessed, care must be taken to ensure the surface build-up of compound is minimised (whilst still creating a strong joint)
- The same procedure should be followed for tapered edge joints, except that the width of each stage is double that required for the tapered edge method. This results in a joint that is around 600mm wide
- Use GIB Tradeset® 45 for the first coat and tape in
- Take extra care when bedding in the tape to ensure that sufficient compound remains behind the tape
- Blending the resultant “bump” from stopping on an un-recessed surface is an issue, especially where critical light comes into play. The wider the joint is, the less the angle it presents to the critical light, so it is less likely that a shadow will show on the side of the joint opposite the light source

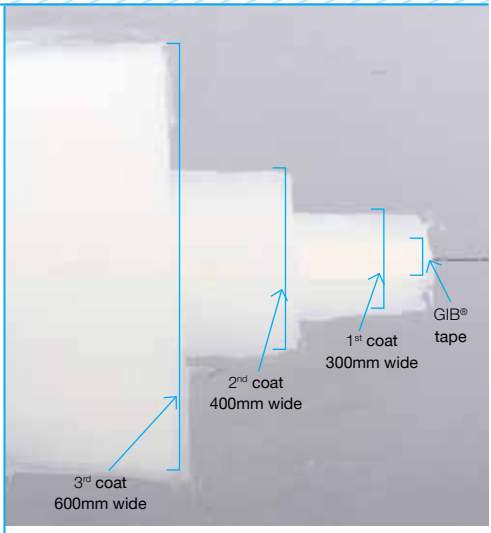

3.8 JOINTING TECHNIQUES – MECHANICAL TOOLS

The mechanical tools referenced in this guide are for representative purposes only and do not preclude the use of alternatives. These include pneumatic taping machines and spring loaded flat boxes. All tools must be used in strict accordance with the relevant manufacturer's recommendations.

Tools Include

Banjo – a taping tool containing a roll of jointing tape and compound which simultaneously applies the jointing tape and compound to a joint.

Automatic Taping tool – a more sophisticated taping tool which has better control of the depth of material under the tape and so is a more reliable tool for ensuring good tape adhesion in hot weather. However, as they can be expensive and difficult to clean, these tools do not lend themselves to applying setting compounds, and consequently are seldom seen in NZ.

Box – a box shaped metal vessel with a slot at the top and adjustable wiping surface to control the flow to the joint, and the shape of the joint. Available in different widths for the different coats of the joint and handles to suit the operator.

Corner Finishing Tools – can apply joint compound to internal corners.

Preparation

- Ensure that all fixings, screws or nails are seated just below the surface of the plasterboard. Any fixings that are driven too far into the plasterboard will cut the paper of the board causing problems such as 'popping'
- Tidy up any damaged areas of plasterboard such as broken corners. It is usually easier to remove these completely and fill them with a plaster based (setting) compound prior to continuing
- Remove any dust or loose material from the plasterboard
- Mixing instructions can be found on the back of the compound packaging

Refer to p. 83 for mixing detail.

Mechanical Stopping With Banjo And Box

A Banjo taping tool applies bedding compound and tape in one step and is an efficient method for taping-in of medium/large areas of plasterboard walls or ceilings.

Note: This device places the tape on top of a layer of plaster, the depth of which is not easily controlled. Be aware that lack of compound under the tape can cause tape adhesion issues.

Always place the banjo on the maximum setting when applying the compound in warm / hot weather.

KDC - Approved Building Consent Document BC210441 - Pg 345 of 512 - 30/08/2021 - ComplyNZ

KDC - Approved Building Consent Document - BC210441 - Pg 346 of 512 - 30/08/2021 - ComplyNZ

First Coat – Banjo

- Mix the bedding compound with a drill and then carefully adjust the water content until it can just be poured from one bucket to another

Note: if the compound is too thin, the tape will tend to slide along the recess and may peel or drop out.

- Place and lock the roll of GIB® tape onto the spindle and thread inside the banjo and along the top (handle) inside edge as illustrated. Pour the compound into the banjo cavity underneath the GIB® tape. Close and clip the side panel
- Place the coated tape centrally in the joint. Hold the tape with one hand whilst pulling the banjo along the joint with the other hand (make sure that the nose of the banjo is held against the surface of the joint)
- Adjust the banjo control knob so that a layer of approximately 2mm thick of compound is on the underside of the tape and is not excessively squeezed out from the edge of the tape when applied
- After placing the tape at the end of a joint, cut the tape neatly with a broad-knife
- Using a 150mm broad-knife held at about 45 degrees, press the tape down into the compound and at the same time removing excess compound
- When the compound is set (or dry) scrape back any ridges

Note: Do not allow setting compounds to set in the banjo.



Second Coat – Flat Box

The flat boxes used for second coating of tapered joints are typically 200mm-250mm wide. They automatically dispense the correct amount of joint compound and feather the edges in one pass. The adjustable blade holder fine tunes the 'crown' for proper compound distribution and shape. The boxes are controlled by a specially designed handle.

To start, place the adjustable notch for the wiper blade on the second lowest setting and then adjust to suit the job. The advantage of using flat boxes for tapered joints is the speed with which joints can be filled. They generally will not require any further touch-up if set up and operated correctly.

- Mix the compound with a drill and adjust to a 'pourable consistency', i.e. requires a minimal effort to 'push' out of the box but not so thin that it will 'run' out of the box, or slump on the wall during use
- Using a scoop, broad-knife, or pump; fill the flat boxes with compound
- Place the box on the surface of the board as flat as possible. Place one hand just below the head of the box handle (to control application pressure to force compound out of the box) and the other hand at the other end (to control the 'brake' and keep the box running parallel to the joint)
- Allow the compound to dry thoroughly before scraping back any ridges or build up

Note: Do not allow setting compounds to set or air-drying compound to dry in the flat box.





KDC - Approved Building Consent Document - BC210441 - Pg 347 of 512 - 30/08/2021 - ComplyNZ

Top Or Finishing Coat – Flat Box

A 300mm flat box is typically used with specifically formulated air-drying finishing/topping compounds for the top/finishing coat.

The air drying compound should be thoroughly mixed and if necessary, the consistency adjusted to give a smooth 'tear free' finish (but not so thin that it will 'run' out of the box during use).

The 'setting' of the flat box is typically two notches above the bottom setting. However, adjustment may be necessary.

The box is adjusted and operated to leave a very smooth surface free from lumps, ridges or scratches.

Note: Don't allow air-drying compound to dry in the flat box. Placing too much compound in one application may result in bubbles, pin holes, and streaks.

Please read notes below to understand some of the issues that can be created by the use of machine tools.

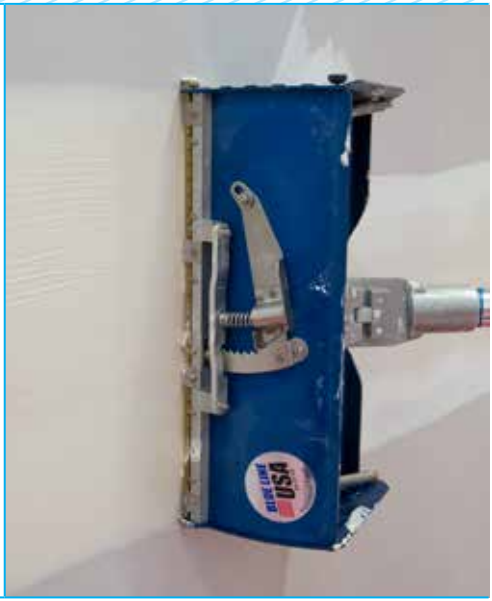

Possible Issues With Machine Tool Application

1. When using machine tools, the compounds placed in them have to be diluted (compared with that required for trowel application) to achieve a viscosity that flows readily through the machine.
2. The addition of water will result in:
   - Greater Shrinkage as the compound dries
   - Longer Drying Time due to a greater amount of water to dry
   - Possibility of Delayed Shrinkage as more water soaks into the substrate (then has to dry back through the joint)

   Longer drying times in cooler conditions must be allowed for before the next coat is applied. Delayed shrinkage may occur if the next coat is applied before the first has dried. Make allowances for this, by warming the rooms to be stopped until the joints are dry.
3. Placing tapes with an automatic taping tool is quick and easy. However it is very easy to force too much compound from under the tape. This can result in poor tape adhesion in summer, as the compound can dry out more quickly. In extreme situations this can lead to the plaster in the compound not being able to set. Be aware and check material depth when starting (to ensure the machine set up and methods of use are appropriate).
4. Horizontally fixed board not supported with framing adjacent to the joint, can result in a variation in the depth of the taper between the two boards. Machine tools can easily place a thin layer on only one edge (this can result in tape adhesion issues).

KDC - Approved Building Consent Document - BC210441 - Pg 348 of 512 - 30/08/2021 - ComplyNZ

6.9 NAIL AND SCREW STOPPING

If good fixing practice has been followed, there should be no fixings in the middle of the plasterboard sheet on the wall. However, this cannot be avoided on ceilings or in fire rated or noise control systems.

Critical light areas

This method takes longer, but ensures that no air is trapped between the screw or nail head and the first coat of compound. This reduces the possibility of dimpling.

- For the first coat, press a mixed GIB® plaster based compound into the fastener indentation with a 25mm putty knife, then wipe off the excess
- Do the second and third coats as per the normal jointing procedure

Non-critical light areas

- For the first coat, wipe the compound across the top of the screw or nail head, as per normal towelling application. Use a 100mm broad-knife for the first two coats of compound
- Do the second and third coats as per normal jointing procedure

For either method, leave the first two coats to dry for at least 24 hours before applying the finishing coat with a 150mm broad-knife. Leave to dry for at least 24 hours and then lightly sand with 220 grit sandpaper.

For over-driven screws, use a short set time setting compound to minimise the time and amount of water that can soak in and swell the board paper. Leave for a longer period to dry compared to normal screw stopping. These actions may reduce the incidence of “popping” or “dimpling” on these surfaces.

6.10 CORNERS AND FINISHING TRIMS

External Corners

These can be finished with:

Paper Faced Trims

- GIB® Goldline® profiled paper faced trims
- GIB® UltraFlex® high impact reinforced corner trims
- GIB® Levelline® reinforced corner trims

Metal Trims

- GIB® Slim Angle metal trims

GIB® Slim Angle

- Mechanically fix at 100mm centres on alternate sides of the corner (fixings should also be placed on both sides at each end of the trim)
- GIB® Slim Angle can be fixed with GIB® Grabber® screws or staples (minimum 10mm)
- Apply a first coat of GIB® setting compound, using a 150mm broad-knife or 200mm trowel
- When hard, lightly scrape back using a broad-knife or the edge of a trowel
- Apply a second coat of GIB® setting compound using a 200mm trowel. When hard, lightly scrape back
- Apply a third coat of a GIB® air drying topping compound using a 300mm trowel and leave to dry
- When thoroughly dry, lightly sand in the direction of the joint with 220 grit or finer sandpaper, taking care not to scuff surface paper of the plasterboard

Internal Metal Corner Trims

Inside corners are installed similarly to outside corners except that only one top coat of a GIB® finishing compound is required. A corner trowel may be used to apply and smooth the compound if desired.

Apply similar installation methods for the other metal trims. Casing beads can be secured using GIBFix® adhesive.

Note: Bullnose external corners are not permitted in fire rated systems.

KDC - Approved Building Consent Document - BC210441 - Pg 349 of 512 - 30/08/2021 - ComplyNZ

Paper Faced Trims

- Paper faced trims such as GIB® Goldline® Platinum Tape-on trims, GIB® UltraFlex® and GIB® Levelline™ are installed by embedding directly into the joint compound
- A slightly thinned mix of a GIB® setting compound is recommended for the installation of paper faced trims because they provide maximum adhesion to the paper surface of these trims
- When installing external Bullnose Corners, check that the plasterboard edges do not extend past the corner of the framing substrate on either side. If the plasterboard edges do protrude, trim them back before commencing installation
- Make sure that products such as GIB® UltraFlex® are fully supported by the two plasterboards neatly butted up to each other. Otherwise a void is left behind the trim, which will become a weak/fail point if the corner is impacted at some point during its life
- Apply a 75mm wide band of GIB Tradeset® or GIB MaxSet® to each side of the GIB® plasterboard corner
- Cut trim to required length and position over the joint compound. Allow 10mm at the bottom for expansion and contraction of framing members. Mitre any corners which will be meeting other trims at corners
- Press the trim firmly into the compound evenly along its full length, embedding the trim and forcing out excess compound. The installation of the trim may be performed with the aid of a corner roller. It is crucial an adequate amount of compound remains under the tape for good adhesion
- Using a 100mm broad-knife, wipe off surplus compound and eliminate all air bubbles under the paper. Be careful not to remove all compound
- Using additional compound, flush the joint with a 150mm broad-knife or trowel. Remove any excess jointing compound on the nose of the trim by wiping with a damp sponge
- Allow to harden and dry, then apply a light top coat of GIB® air dry compound (in a band of about 200mm wide). This is done using a large (250–300mm wide) broad-knife or trowel
- Feather the compound by drawing the knife along the trim, with one edge of the blade riding on the nose of the trim and the other on the surface of the GIB® plasterboard
- Repeat for the other side of the trim and allow to dry
- Once the previous coat is dry, apply a second top coat of GIB® finishing compound. Feather the edges of each coat about 50mm beyond the preceding coat. When the top coat is completely dry, lightly sand, taking care not to scuff the face paper of the GIB® plasterboard

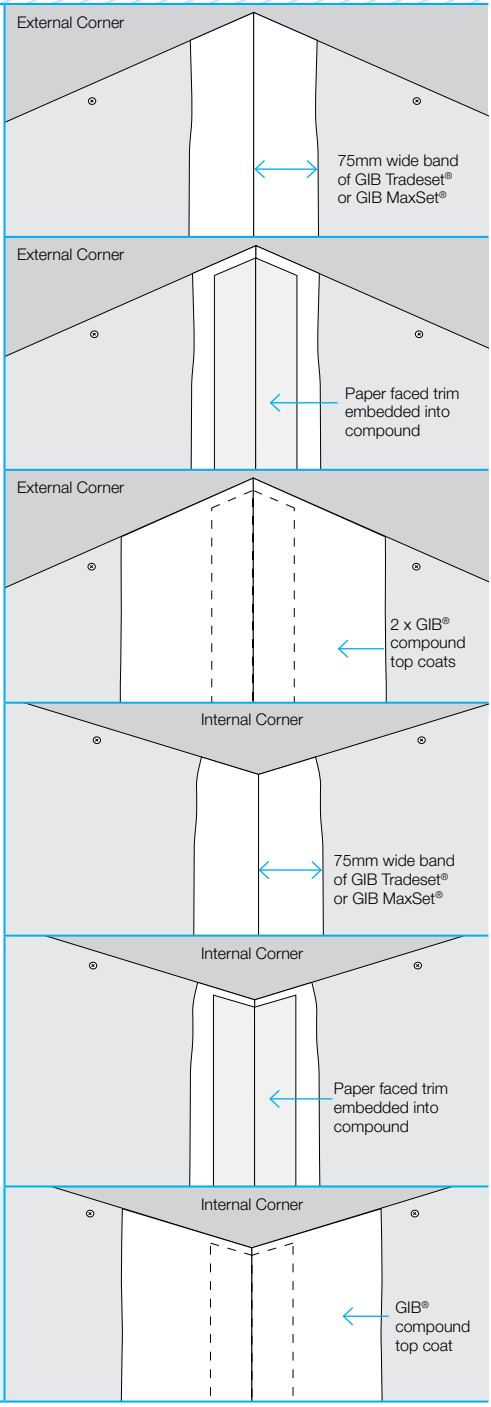

Tips:

- Multi purpose air drying compounds may be used to adhere GIB® UltraFlex® and GIB® Levelline® trims, however they may take a long time to dry
- Generally air drying compounds have a higher shrinkage. Filling of any voids behind tapes with air drying compounds is not recommended, voids should be filled with setting compounds

9.11 NEGATIVE DETAIL

Negative details can be formed at plane junctions and at junctions between dissimilar building materials. There are many different effects that can be achieved and some suggestions are shown below.

- GIB® Goldline® Platinum GR reveals, or the GIB® Rondo® P50 metal reveals, can be used to create straight, evenly spaced details that clearly define the junction
- Care needs to be taken to ensure that joints are straight and that adequate clearance is provided for the flange of the reveal trim

Note: Allow a 14mm–17mm gap for the top flange of the GIB® Goldline® Platinum trim or a 12mm gap for the Rondo® P50 metal reveal trim

Negative Detail

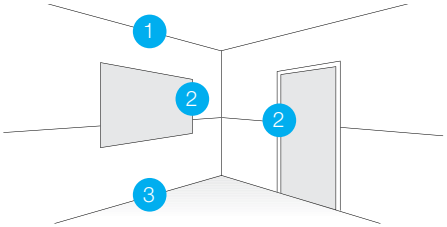

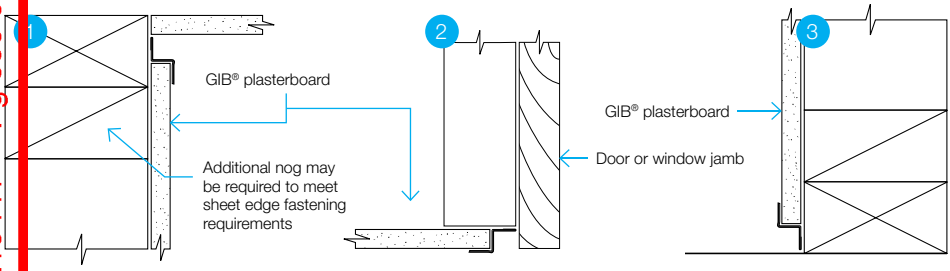

KDC - Approved Building Consent Document - BC210441 - Pg 350 of 512 - 30/08/2021 - Comply NZ

4.12 GIB-COVE®

Preparation

- Always fix GIB-Cove® prior to skim coating or any paint application
- Ensure that all joints that are not to be covered with GIB-Cove® are stopped first. For accurate placement of GIB-Cove®, mark walls with a chalk line (either 50mm, 55mm, 75mm or 90mm) from the wall/ceiling angle. Measure and cut the GIB-Cove®, using a fine toothed saw and a mitre box. Tidy the cut edges using sandpaper
- If cove work has not been done before, it is suggested that slight over-ordering is done so a short length is available to practice cutting the angles up the right way
- It is also suggested that a chalk line be used around the room to establish the correct position on the wall for the bottom of the GIB-Cove®
- Measure the GIB-Cove® to get the correct measurement for the chalk line set up. Do this by placing a straight edge from each edge of the cove, and measuring the length to where they bisect. Use this measure as the chalk line datum
- Align the cove on the chalk line to ensure all the cove is installed at the same level
- Joints in long runs of GIB-Cove® should be mitred (not square cut)
- Mix GIB-Cove® Bond to instructions on the back of the bag







KDC - Approved Building Consent Document - BC210441 - Pg 351 of 512 - 30/08/2021 - Comply NZ

KDC - Approved Building Consent Document - BC210441 - Pg 352 of 512 - 30/08/2021 - ComplyNZ

Application

- In smaller rooms (e.g. toilets and bathrooms) fix shorter lengths of GIB-Cove® first. This allows the longer more flexible pieces to be placed last for a tight fit
- Apply the GIB-Cove® Bond in two strips (about 10mm thick) along the entire length of each edge of the GIB-Cove® where contact will be made with ceiling and wall
- Where friction joints or deflection heads are used in non Fire Resistant Rated commercial light steel framed construction, the GIB-Cove® may be adhered to the ceiling only and sealed to the wall using a flexible sealant
- Carefully place the first length along the chalk line and press firmly into position. Hold in place until the adhesive grips
- Remove excess GIB-Cove® Bond using a broad-knife and clean the joints with a moistened brush or sponge
- Where walls and ceilings are uneven, it may be necessary to hold the GIB-Cove® in position for longer until the GIB-Cove® Bond has set. This is done with partly driven nails or screws supporting the edge of the GIB-Cove®. These can be removed and the holes stopped when the adhesive has set. Note: GIB-Cove® Bond must be discarded after it shows signs of stiffening



5.13 SKIM COATING

All paint products and systems must be applied in strict accordance to the manufacturer's recommendations.

Level 5 Skim Coating

Skim coating is one method to achieve a Level 5 finish as specified in AS/NZS 2589:2017. A Level 5 finish is defined as being 'characterised by a parity of texture and porosity' over the entire surface of the plasterboard, jointing and fastener points.

Skim coating can be achieved by applying jointing compound to the surface with a trowel. This creates a uniform texture (and also hides bumps, steps and joint protrusions).

Alternatively, high build paint systems can be used. These are comprised of a specially formulated high build coating which is very efficiently applied with airless spray equipment. These also do an excellent job of masking surface texture variance, but may not correct irregularity in the board surface.

Trowel Application of a Skim Coat New GIB® Plasterboard

This surface is the simplest to skim coat, however care should still be taken as problems can occur through incorrect application.

Any of the GIB® ready mixed air drying range of compounds can be used for trowel applied skim coating. Consider weather conditions when making the choice to ensure optimum sand-ability is achieved. See p. 98 for further detail.

- Joints should be prepared in the normal manner up to the finish coating stage. Allow plaster to dry thoroughly
- Apply a skim coat of approximately 0.25mm–0.5mm (but no greater than 1.0mm) of the GIB® compound of choice to the entire surface of the board
- Leave the skim coated area until completely dry
- Sand by hand or a pole sander, in one direction with 220 grit or finer sandpaper

KDC - Approved Building Consent Document - BC210441 - Pg 353 of 512 - 30/08/2021 - ComplyNZ

Ensure surface is free of dust. Seal with a wallboard sealer prior to decoration. Use a pigmented oil based sealer for areas that will be exposed to moisture

Existing Plasterboard – Undecorated

These areas would typically include board that has been fixed to the wall and has not been stopped. When the board has been exposed to the elements for an extended period of time face paper may fade.

1. Remove any dirt or oil with detergent. Allow to thoroughly dry before continuing
2. Seal the entire area with a pigmented-oil based sealer
3. Lightly sand the entire area with 100–120 grit sandpaper
4. Apply a skim coat of approximately 0.25mm–0.50mm of GIB® air drying compound to the entire surface of the board
5. Leave GIB® air drying compound to completely dry. Sand with 220 grit or finer sandpaper, in one direction, using either a pole sander or sanding block. A vacuum power sander can also be used
6. Ensure surface is free of dust. Seal with an Acrylic Wallboard Sealer prior to decoration. Use a pigmented oil based sealer for areas that will be exposed to moisture

Existing Plasterboard – Painted Surface

1. Clean the entire area to be skimmed with water and a scouring pad. Use an alkaline cleaning solution in water to remove any dirt/oil. Thoroughly rinse with water
2. Sand painted areas to be skimmed with 100–120 grit sandpaper
3. Apply a skim coat of approximately 0.25mm–0.50mm of GIB® air drying compound to the entire surface of the board
4. Leave GIB® air drying compound to completely dry. Sand, with 220 grit or finer sandpaper, in one direction, using either a pole sander or sanding block.
5. Ensure surface is free of dust. Seal with an Acrylic Wallboard Sealer prior to decoration. Use a pigmented oil based sealer for areas that will be exposed to moisture

Existing Plasterboard – Previously Wallpapered

This surface would be commonly encountered in renovation work where old wallpaper has been removed and skim coat is required. This surface presents special problems because it is usually rough, uneven, has loose paper and is covered with wallpaper size.

1. Rinse area twice with warm water and leave to dry
2. Repair any damaged areas to the core of the plasterboard with GIB Tradeset® 20 or 45. Ensure plaster is completely set and dry before proceeding
3. Seal the entire area to be skim coated with a pigmented oil based sealer. (**Note:** Water based acrylic sealers must not be used on existing wallpapered plasterboard)
4. Sand the entire area with 100–120 grit sandpaper
5. Apply approximately 0.25mm–0.5mm thick coat of GIB® air drying compound
6. Leave the GIB® air drying compound to completely dry. Sand, with 220 grit or finer sandpaper, in one direction, using either a pole sander or sanding block
7. Ensure surface is free of dust. Seal with an Acrylic Wallboard Sealer prior to decoration. Use a pigmented oil based sealer for areas that will be exposed to moisture

KDC - Approved Building Consent Document - BC210441 - Pg 254 of 512 - 30/08/2021 - ComplyNZ

9.14 SANDING

Winstone Wallboards has a range of compounds to cater for different drying conditions experienced in New Zealand.

The GIB Trade Finish® compounds have different sanding characteristics. For example, during winter a harder finishing compound can be used to avoid scratching and swirl marks. During summer, an easier to sand finishing compound can be selected to speed up sanding (and where a lot of hand sanding is required).

When drying conditions are not ideal, problems may arise with softer compounds scratching too easily and leaving "swirl" marks after sanding. A harder finishing compound is recommended in these conditions (e.g. a switch from GIB Trade Finish® Lite to GIB Trade Finish® Multi or from GIB Trade Finish® Multi to GIB Trade Finish® Heavy Weight in colder conditions).

When selecting a harder finishing compound, it is important to remember the coats underneath need to be just as hard (or harder) and not softer. Using softer compounds underneath a hard compound can be problematic if the top coat is completely sanded away. This can manifest as grooves or trench marks being created rapidly as the softer compound underneath is removed more easily; and may give the impression the top coat has delaminated when it has not. To avoid this, use the same compound or a softer compound for the top coat.

Ease Of Sanding

The plaster based GIB Tradeset® range and GIB MaxSet® taping compounds are both much harder than any of the GIB® air drying compounds, so there are no compatibility issues.

GIB Lite Blue® (which is used as a second coat) is a softer setting compound compared to the GIB Tradeset® range and GIB MaxSet®. GIB Lite Blue® is softer than the hardest air drying compound but suitable to use under GIB TradeFinish® Multi or softer compounds.

Refer to p. 98 for a list of GIB® compounds ordered from easiest to hardest to sand.

Machine sanding

Purpose built vacuum sanding machines can be used to significantly reduce airborne dust, as well as the time and effort taken to sand the joints (and general clean-up time).

- Follow the manufacturer's instructions. Use 220 grit paper
- When sanding, position the sanding head so that it is in contact with the joint. Press lightly on any feathered edges so that the paper is not scuffed excessively
- Be careful when using a machine sander on nail and screw hole areas. If the paper surface is scuffed excessively, it may show through the finished painted surface as a variance in texture or sheen, diminishing the overall quality of the finish

Pole sanding

- Pole sanding is a dry sanding technique
- Round pole sanders have no corners to dig into the surface and use standard sanding disks like a machine sander
- Rectangular pole sanders are good for corners
- The main drawback with pole sanding is the volume of dust created. Ensure all safety issues are addressed by wearing suitable personal protective equipment before using these tools

Sanding Blocks

These are block shaped sanding pads, handy for corners and small sanding areas.

Sandpaper

Sanding disks come in many types.

Although they may state the same grit size, the abrasive material used also plays a part in how quickly the surface can be sanded. If too abrasive and drying issues are experienced, swirl marks may be left in the surface of the joint.

If problems are experienced with one sort of sanding disk, try another. If the problems are on-going, change to a harder air drying compound, or heat the premises to be stopped (to ensure the joint has dried), and is therefore sandable.

KDC - Approved Building Consent Document - BC210441 - Pg 355 of 512 - 30/08/2021 - ComplyNZ

Sanding In General

- Always sand in the direction of the joint
- Try to minimise “scuffing” of the paper surface next to the joint
- If scuffed excessively, the “furry” quality of the sanded paper will show as a different texture through the painted surface, creating a visible difference in sheen
- Be aware that damp conditions (such as foggy weather), can cause the surface of the board to absorb moisture, and be far more likely to scuff badly when sanded. Either heat the room, or use worn sand paper disks to ensure a less abrasive effect is applied to the paper

GIB Ultraline® plasterboard has a surface coating on the paper which is far more resilient to sanding compared to conventional paper surfaces. This is one of the reasons why this board is touted as a Level 4-plus product.

6:15 JOINT SYSTEMS RECOMMENDATION

The GIB® plasterboard range of air drying compounds caters for different weather conditions caused by seasonal change.

Air drying compounds (the compounds in pails) are held together by binders (glue). When these binders coalesce and cure, they bind the filler particles (mostly limestone) together which causes the product to go hard. How hard a specific compound will be to sand is dictated by temperature as it cures.

- The warmer the weather, the harder the product will become to sand
- The colder the weather, the softer the same product will become to sand

This can be seen when a compound that is great to machine or hand sand when applied on a hot summer’s day is seen to be much easier to sand if applied on a cold winter’s day. This can result in the winter application sanding too easily, resulting in swirl marks that ruin the finish when sanded, or may also be easily damaged if trade folk brush past a dry but not painted joint.

Conversely, a harder compound may sand well in winter, but become too hard if applied in very hot weather, or if in-line with sun shining through a window in summer resulting in direct UV penetration.

This may result in the product becoming “glazed” as it is sanded and very difficult to sand.

To resolve this issue there is a range of GIB® compounds, each of which is optimised for warm, cold, or in-between weather use. It is up to the tradesperson to select the product most suited to the condition to ensure ease of sanding and quality of finish.

The GIB Trade Finish® range was developed to ensure a product is available that has similar rheological (trowelling) properties through the range, but different sanding characteristics to suit different seasons.

The harder to sand products should be used in the colder weather (winter). In these conditions the binder will not cure as hard, however it will still be hard enough to resist swirl marks, scratching and trade damage.

The easiest products to sand should be used in warm weather, when the binder will cure harder. This creates a surface that is easy to sand and can be machine sanded in summer without leaving swirls and dig marks.

The table on the right shows the sanding characteristics of each GIB® compound.

Remember

- Harder sanding products in cold seasons
- Easier sanding products in warmer weather

Change from one to the other for the cold and warm seasons if ultimate ease of sanding without swirl marks and scratching is desired. Use the chart to guide you to figure what will work best for you.

KDC - Approved Building Consent Document - BC210441 - Pg 356 of 512 - 30/08/2021 - ComplyNZ
Warmer
Weather Conditions
Colder

Ease of Sanding Table

Sanding/Scrape	GIB® Air Drying Compound	Setting Compound
Very easy sanding	GIB Trade Finish® Extra Lite 	
Easy sanding	GIB Trade Finish® Lite GIB Plus 4® 	
	GIB U-Mix® 	
Moderate sanding	GIB Trade Finish® Multi 	GIB Lite Blue® 
Harder to sand	GIB Trade Finish® Heavy Weight 	
Easy to scrape		GIB Tradeset® 
Scrape while “green”		GIB Maxset® 

KDC - Approved Building Consent Document - BC210441 - Pg 357 of 512 - 30/08/2021 - ComplyNZ

5.16 PAINTING

All preparation and painting work should be undertaken in accordance with AS/NZS 2311 'Painting of Buildings' and with the relevant paint manufacturers recommendations.

Surface Preparation Prior to Painting

Ensure all stopped surfaces are dry, sanded smooth and that any dust, oil, grease or dirt has been removed with a soft brush, damp soft cloth or a vacuum cleaner.

Ensure all windows, electrical fittings, furniture, covers, doors (or other components which are not to be painted), are masked out, covered or protected throughout the painting process.

Guidelines

- Flat paints tend to minimise visibility of any minor surface imperfections but may not be suited to areas that need regular cleaning
- Light tone colours tend to diffuse light, which helps in disguising any minor surface imperfections
- Avoid the use of harsh lighting (e.g. 'wall washers') or situations such as windows extending to the wall or ceiling line. If these situations are unavoidable consider the use of a Level 5 pre-decorative skim coat
- As a general rule 'cut in' around edges and doors with a brush and then apply the remainder of the paint system with a 6mm –10mm nap roller sleeve
- Always maintain a 'wet edge' with the roller and lay off the final coat in one direction, preferably parallel to the dominant light source
- On faded GIB® plasterboard, use a pigmented alkyd sealer as the first coat

IMPORTANT NOTE: BACK ROLLING

Where the paint system will be applied by airless spray equipment, it is essential to 'back roll' the final coat of paint using a roller with a fine nap. This is to create a 'soft' orange peel effect which aids in disguising plasterboard jointing, or any other minor surface imperfections.

Painting Existing Walls

Follow the paint manufacturer's instructions regards preparation and methods of application.

Wallcoverings

New Surfaces – Follow the application instructions of the wallcovering manufacturer.

5.17 PLASTER RENDERING INTERIOR MASONRY OR CONCRETE

Victor® Multi Plus is a plaster based material formulated for application to interior concrete or masonry surfaces.

Mixing Instructions: Undercoat

Victor® Multi Plus with the addition of sand, can be used as a base or undercoat coat (up to a ratio of 25% of sand by volume) to rule out uneven internal concrete substrates. The sand must be a good washed grade, free of contaminants.

- As a guide, use a ratio of 2:1 (two dry volumes Victor® Multi Plus to one volume dry sand). The grade and moisture content of the sand will influence the water requirement
- Ensure mixing equipment and water is clean
- Use 1.1–1.2 litres of water to 2kg of the Victor® Multi Plus and Sand Mixture (11–12 litres of water per 20kg bag)
- Place one volume of water in the container and then sprinkle two volumes of compound into the water. DO NOT use lime
- Briefly mix until plaster is blended (by hand or electric drill fitted with mixing blade). Note: maximum drill speed 600rpm, as over-mixing can accelerate setting and reduce working time
- Add 1 volume of sand and thoroughly remix, adjusting consistency if necessary. Note: do not retain product that has started to harden (or intermix with previously prepared material), as this will affect the finish and give an unpredictable setting time
- Wire brush surface to provide key for subsequent coats if the surface has been 'polished'

KDC - Approved Building Consent Document - BC210441 - Pg 358 of 512 - 30/08/2021 - ComplyNZ

Mixing Instructions – Finish Coat

- Ensure mixing equipment and water is clean
- Use 1–1.06 litres of water to 2kg of Victor® Multi Plus (10–10.6 litres of water per 20kg bag)
- Place water in the container and then sprinkle the compound into the water. DO NOT add lime
- Allow to soak for 3–5 minutes
- Mix until plaster is smooth (by hand or electric drill fitted with mixing blade). Note: maximum drill speed 600 rpm; as over-mixing can accelerate setting and reduce working time
- Adjust consistency if necessary by adding water sparingly. Note: do not retain product that has started to harden (or intermix with previously prepared material), as this will affect the finish and give an unpredictable setting time.

Application of Undercoat and Finishing Coat

- Application thickness should be approximately 3mm for a finishing coat. For thicker filling of uneven surfaces such as recessed mortar joints (up to 15mm), it is preferable to lay on an undercoat. The undercoat should be ruled off and trowelled to a flush, but unpolished finish. The Victor® Multi Plus finishing coat may be applied once the undercoat has adequately set (if applied too early the undercoat may distort and fail)
- The finishing coat of Victor® Multi Plus is applied and lightly trowelled to fill imperfections and then finished to a smooth surface. Do not attempt to feather out the gauge as the minimum coating thickness is 3mm. After the background has absorbed most of the water from the finish coat, trowel the surface to make it denser. Light dampening of the surface with water may be necessary to enhance trowelling. As the final set takes place, close in with the trowel to provide a dense smooth surface. Walls should be worked from the top to the base
- Victor® Multi Plus may be applied to a suitably prepared base (which must be sound and free of oil, grease, wetting agents, shiny smooth finishes, dirt or other loose material). If the surface will not provide a key (as for some precast concretes), then it should be roughened or coated with a suitable bonding agent. Check with the concrete manufacturer for bonding agent recommendations

Concrete Masonry, Blocks and Bricks

The surface should be:

- dampened with water if dry
- under coated with Victor® Multi Plus, render, then the finishing coat is applied. Check with a concrete manufacturer for sealing agent recommendations

If the undercoat has dried out, it should be uniformly and lightly dampened down with water (immediately prior to the finish coat application).

Precast or 'Off the Form' Concrete

- Generally application of a bonding agent is required before plastering is commenced. If the surface is uneven, undercoating is recommended
- The finish coat can be applied as soon as the undercoat has set

Low Suction Backgrounds

Precast slab construction, high density concrete, no-fines cement, etc.

- The substrate has a very large influence on the nature of application where a low suction background limits the Victor® Multi Plus thickness
- If too thick a coating is applied in the first coat (above 5mm), there may be a tendency for the material to "slump" on the wall. In any low suction background situation, a bonding agent MUST be used to avoid failure

Medium to High suction Backgrounds

Sand/cement undercoats, aerated concrete slabs and blocks, normal unglazed porous brick work, etc.

- In high suction background situations, the substrate must be adequately dampened down with water (or preferably a diluted bonding agent applied) to control the porosity/ suction

These types of substrate do aid the application of a thicker coating, with the subsequent higher suction holding the coats more firmly onto the substrate. Ideally the final coat should be between 3mm-5mm thick.

KDC - Approved Building Consent Document - BC210441 - Pg 359 of 512 - 30/08/2021 - ComplyNZ

7.0 REPAIRS AND MAINTENANCE

7.1 PLASTERBOARD REPAIRS

Plasterboard repairs are necessary for a number of reasons. Cracks in plasterboard or sheet joints are generally the result of movement of a building. A common example of this is where joints are made at the high stress points above and/or below the corners of windows and doors. If you notice these cracks forming, it is suggested you leave these for approximately 1 year before repairing. This allows the building to settle and should reduce the likelihood of problems recurring, but is no guarantee the same problems will not occur.

We also include some useful pointers when repairing dings and holes in GIB® plasterboard. In addition we cover the mounting of fixtures to GIB® plasterboard when fixing into a stud with screws or nails is not possible.

Note: These instructions are NOT suitable when conducting repairs to fire rated walls or ceilings. Similarly, mounting fixtures in GIB® fire rated walls MUST BE AVOIDED as this will affect the performance of the fire rated system (see GIB® Fire Rated Systems literature).

Tools

Some, or all, of the following tools will be required depending on the actual work being carried out.

- Rubber spatula (or similar) for mixing plaster
- Plastic Bowl
- 150mm Broad-knife
- Sanding Block
- Sharp Craft Knife
- 280mm Trowel

All tools should be clean and free of any old and set plaster. Stainless steel tools are recommended as these are less likely to corrode.

Tip: A light spray with lubricant and a wipe with a cloth or paper towel will also help keep metal tools in the best condition.

Remember that as these tools, e.g. broad-knives, are being used to create a smooth finish, any kinks or scratches in the edge of the tool will cause rough areas in the plaster. Do not use broad-knives for scraping, opening paint cans, etc.





Repairing Dings, Cracks and Scratches

The following procedure should be used for repairing dings, cracks and scratches less than 2mm deep.

- Sand the area around the repair to ensure the best adhesion between the compound and the painted surface
- Using a broad-knife apply GIB RediFilla® to the damaged area
- Leave the compound to dry (at least 24 hours for areas up to 1mm thick and 48 hours for thicker areas)
- Using 220 grit sandpaper (or finer), sand the area in one direction (not in a circular motion)
- Decorate as required



KDC - Approved Building Consent Document - BC210441 - Pg 360 of 512 - 30/08/2021 - Comply NZ

Repairing Minor Holes

Occasionally a plasterboard patch will be required to repair a damaged wall.

- GIB RediFilla® is a pre-mixed, air drying compound that can be used to repair dings, marks, dents, and blemished surfaces on plasterboard and other surfaces
- It's an easy-sand product to which paint adheres, so can be used as a total repair system for minor repairs
- GIB RediFilla® is available in handy 2 litre pails

Minor holes or construction of small joints for one-off hole repairs

- GIB TradeFilla® is a setting compound. When mixed with water, it has a 10 minute working life it changes viscosity during its working life, enabling differing surfaces to be filled by the same product (e.g. repairing a grazed or rough surface when thin, and filling holes as it thickens up)
- When dry, GIB TradeFilla® is a sandable product to which quality paints adhere
- It can be used for the entire repair process, or for the first two coats (in conjunction with GIB® air drying compound as the top coat)
- GIB TradeFilla® is available in a 5kg bag

Larger or multiple repairs

- GIB Tradeset® 20 is a setting compound that sets hard in approximately 10–30 minutes when mixed with water.
- Complete drying may take a further 24 hours depending on how thick the compound is applied
- GIB Tradeset® 20 is available in 5kg and 20kg bags
- Tip: As a guide when mixing powder compounds, sprinkle in just enough powder until the water no longer soaks through. If water soaks through, sprinkle in a little more powder
- Tip: It is preferable to mix the compound too thick than too thin. It is easier to add water than to add powder
- Leave the mixture to soak for approximately 30 seconds
- Mix using a rubber spatula or similar for approximately 90 seconds until the mixture is smooth and lump free.

Drying Time

Joint compound must be allowed to dry before it is painted.

Approximate drying times for air drying compounds is a minimum of 24 hours between coats (and longer if the conditions are cold and/or damp). See p. 84.

Water, air and mix temperatures should be kept above 10°C. If temperatures are low, place a fan heater in the room and leave on a moderate setting (no more than 20°C) for a couple of hours. Complete the job, then leave the fan heater going for 24 hours, with the door open to allow exchange of air into the room. This will ensure the taping coat dries out in a reasonable time.

Buy only as much product as is necessary to complete the work you will be doing.

Clean Up

Leave any spilt material to harden before scraping up and disposing of to landfill. A little warm water on a cloth is normally sufficient to remove any residue.

KDC - Approved Building Consent Document - BC210441 - Pg 361 of 512 - 30/08/2021 - ComplyNZ

Repairing Small To Medium Holes (up to 150mm in diameter)

Winstone Wallboards recommends the use of GIB Tradeset® 20 or GIB TradeFilla® for base coats and GIB Plus 4® or GIB RediFilla® for the finishing coats.

1. A GIB® plasterboard patch will be required for holes up to 150mm in diameter
2. Cut away the damaged area to a neat rectangular hole
3. Sand the area around the repair to ensure the best adhesion between the compound and the painted surface
4. Cut a piece of GIB® plasterboard that is approximately 20mm longer than the hole, but small enough to fit through the hole
5. Place a 60mm flat head nail through the centre of the piece of GIB® plasterboard and coat the ends with compound
6. Insert the patch into the hole and pull toward the front using the nail
7. Once hard (approximately 1 hour) gently push the nail back through the patch
8. Cut a piece of GIB® plasterboard to loosely fit the hole
9. Use compound to fix the patch in place
10. Apply compound over the joints
11. Immediately place a length of paper jointing tape over the four edges into the compound, using the broad-knife to remove any air bubbles under the tape
12. Once the first coat is hard, apply a second coat of compound over the joint areas, feathering the edges, so that it is approximately 250mm wide
13. Leave the compound to dry for at least 24 hours
14. Scrape away any rough edges using a broad-knife
15. Apply a thin finishing coat over the patched area
16. Leave to dry and sand smooth
17. Decorate the area as required

Note: These instructions are NOT suitable when conducting repairs to fire-rated walls. Similarly mounting fixtures in fire-rated walls MUST BE AVOIDED as this will affect the performance of the fire rated system.











KDC - Approved Building Consent Document - BC210441 - Pg 362 of 512 - 30/08/2021 - ComplyNZ

Repairing Large Holes (over 150mm in diameter)

For larger holes it becomes necessary to cut away the damaged area back to one or two studs and use a GIB® plasterboard patch.

- Cut away the damaged area to either one or both studs surrounding the damage to form a rectangular hole
- Sand the area around the repair to ensure the best adhesion between the compound and painted surface
- Cut a length of GIB® plasterboard that is 100mm wide and 100mm longer than the height of the hole.
- Tip: If you have cut away to both studs this will not be required. Fixing to both studs is the easier method of repair, but is not always possible
- Using GIB Tradeset® 20 or GIB TradeFilla®, fix the plasterboard to the side of the hole which is not over the stud
- Cut a new piece of GIB® plasterboard to fit the hole and fix this to the stud(s) and/or plasterboard back-block
- Apply a coat of GIB Tradeset® 20 or GIB TradeFilla® over the four joints using a broad knife
- Immediately place a length of paper jointing tape into the compound, using the broad knife to remove any air bubbles under the tape

Tip: If any blisters appear in the tape this is usually an indicator that insufficient compound is present behind the tape. Lift the area of tape away using the corner of the broad-knife, apply a small amount of compound and press the tape back into the compound once more.

- Once the first coat is hard apply a second coat of GIB Tradeset® 20 or GIB TradeFilla® over the joint areas, feathering the edges, so that it is approximately 250mm wide
- Leave the compound to dry for at least 24 hours
- Scrape away any rough edges using a broad knife
- Apply a thin coat of GIB RediFilla®, or any other GIB® air drying compound, over the patched area
- Leave to dry and sand smooth
- Decorate the area as required



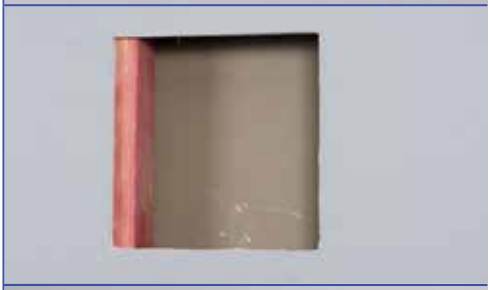







KDC - Approved Building Consent Document - BC210441 - Pg 363 of 512 - 30/08/2021 - Comply NZ

1.2 MOUNTING FIXTURES TO GIB® PLASTERBOARD

The first option for attaching fixtures to plasterboard walls is to try and locate any framing behind the fixture. If it is not possible to make use of the framing to attach the fixture, there is a wide range of proprietary fastenings for attaching fixtures of varying weights.

Strictly follow the manufacturer's instructions regarding weight limits.

Tools

Some, or all, of the following tools will be required depending on the actual work being carried out.

- Drill and bits
- Screw Driver

Systems

- Some options are shown in the diagrams on the right hand side of this page
- These can be used in GIB® plasterboard walls that are NOT fire-rated
- They are suitable for fixing lightweight items such as pictures, coat hooks and fire extinguishers (up to 20kg), etc. in situations where fixing into the stud with nails or screws are not possible.
- These systems are NOT suitable for heavy items such as shelving, cupboards or vanity units which require additional framing for support
- The fixing method depends on the thickness of the GIB® plasterboard and the distance that the fixture hangs out from the wall
- The following guidelines are indicative only. If in any doubt, consult the fixing manufacturer or distributor. The capacities shown are given for 10mm GIB® Standard plasterboard.

Allowable Fixture Weight 3kg

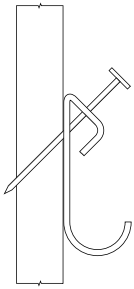

Allowable Fixture Weight 6–8kg

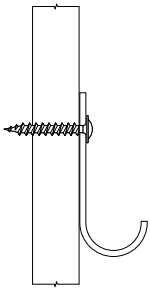

Allowable Fixture Weight 8kg

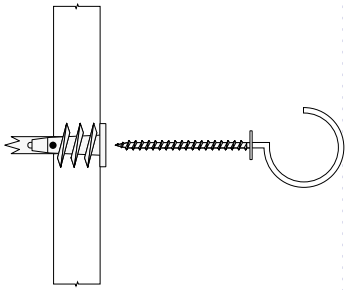

Allowable Fixture Weight 15–20kg

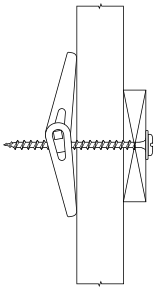

KDC - Approved Building Consent Document - BC210441 - Pg 364 of 512 - 30/08/2021 - ComplyNZ

3.0 GIB® TROUBLESHOOTING

Blisters in Tape

Description
- Bubbles appear in areas of the paper jointing tape (ranging in size from approximately 10mm to 40mm, or more)

Remedy
- Slit tape to open up blistered area
- Fill out with compound, then press tape back in place with broad-knife
- When dry, smooth to level finish

Cause
- Insufficient compound used under tape
- Tape not initially pressed into good contact with compound
- Too much compound forced from under tape by excessive tool pressure when embedding
- Not enough compound in recess
- Compound gauge is too dry

Prevention
- Provide sufficient compound under entire tape – 0.8mm

Centre Cracking

Description
- Cracks appear in the joint down the centre of the joint tape

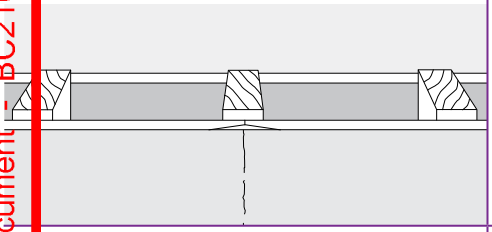

Remedy
Relieve stress, i.e. providing adequate isolation by installing a control joint and re-taping, then feathering compound over broad area to disguise build-up

Cause
- Abnormal stress build-up resulting from structural deflection or racking
- Excessive stresses resulting from hygrometric and/or thermal expansion and contraction

Prevention
- Correct unsatisfactory environmental conditions
- Provide sufficient relief and re-tape
- Provide proper isolation from structure to prevent stress build-up
- Provide adequate control joints
- Structurally brace underlying framing
- Ensure moisture content of timber is 18% or less

KDC - Approved Building Consent Document - BC210441 - Pg 365 of 512 - 30/08/2021 - ComplyNZ

Joint Darkening

Description
- A dark area occurs in the area of the joint commonly as a result of set compound being darker than dried compound

Remedy
- Redecorate after joints are thoroughly dry

Cause
- Occurs most commonly with colour-tinted paint rather than white. Most severe when applied in humid weather or when joints have not fully dried

Prevention
- Be sure joints are thoroughly dry before painting

Edge Cracking

Description
- Cracks at edge of GIB® tape or GIB® Goldline® trims

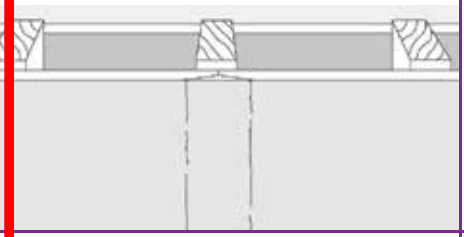

Remedy
- Remove all poorly bonded tape, then reapply compound and tape in correct manner

Cause
- Fast drying of taping compound due to high temperature and low humidity, or excessive drafts
- Improper application, e.g. over-dilution of compound, use of wrong compound, or no second coat over tape
- Cold, wet application conditions (also causes poor bond)

Prevention
- In hot, dry conditions, use GIB Tradeset® 45
- In extreme conditions use a multi-purpose air drying compound. Note: these dry rather than set, so provide more open time
- Place shielding devices over room openings to prevent drafts. Do not apply joint treatment over hot surfaces
- During cold weather, control heat at minimum 10ºC and supply good ventilation
- Avoid practices listed under “Cause” opposite

Excessive and/or Delayed Shrinkage

Description
- Shrinkage that occurs after longer time periods or is unusually high

Remedy
- See ‘starved joints’ (p. 108)

Cause
- Atmospheric conditions – slow drying and high humidity
- Insufficient drying time between coats of compound
- Excessive water added in mixing compound
- Excessive compound depth
- Combinations of the above

Prevention
- Ensure that each coat of compound is properly dry before applying the next. Ensure a minimum temperature of 10°C is maintained during application and drying of compounds

KDC - Approved Building Consent Document - BC210441 - Pg 366 of 512 - 30/08/2021 - ComplyNZ

Shadowing

Description
— Shows as a build-up of dust, typically once the wall has been decorated

Remedy
— Wash painted surfaces with warm water and redecorate surface if necessary

Cause
— Temperature differentials in outside walls or top floor ceilings cause airborne dust to collect on colder condensation spots of interior surface

Starved Joints

Description
— Joint area is under filled in relation to the surrounding plasterboard

Remedy
— Reapply a full coat of compound over tape. Since this is the thickest application most shrinkage occurs in this coat, making it easier to fill taper properly. Finish by standard procedure

Cause
— Delayed shrinkage caused chiefly by insufficient drying time between coats of compound
— Insufficient compound applied for second taping coat to fill joint recess/taper. Shrinkage usually progresses until drying is complete
— Over-thinning compound, particularly with boxes

Prevention
— Allow each coat of compound to dry thoroughly before applying succeeding coat, or use a low-shrinkage setting compound such as GIB Tradeset® or GIB Lite Blue®

Finish Gloss Variation

Description
— Variations in gloss level of paint between the plasterboard and joint area

Remedy
— Allow to ‘age’ for 3–4 weeks then redecorate. Ensure that the paint is roller applied

Cause
— Differences in suction of the board paper and joint compound. Problem accentuated by strong side lighting with slight angle of incidence to ceiling or wall surface. May also be chemical incompatibility of joint compounds and paint system

Prevention
— Before painting with high gloss paint, apply skim coat of compound over entire surface (or use a spray on skim coat system)
— Consider where critical lighting is coming from and move if possible

KDC - Approved Building Consent Document - BC210441 - Pg 367 of 512 - 30/08/2021 - ComplyNZ

Paint Sheen Variation

Description	Remedy
— A differential in gloss levels over the whole area of the wall. This variation can be greater on nail holes and joints, and is highlighted by the use of semi and full gloss paints	— Sand back and allow joint compound to fully dry before applying a sealer coat. Then apply correct paint system as per the manufacturer's instructions
Cause	**Prevention**
— Nail holes and joints not sealed and undercoated correctly — Joint compound not fully dry before paint application — Burnish marks caused by rubbing or washing the wall — Incorrect sealer used which does not equalise surface absorption of paper and compound	— Use correct paint system and apply as per manufacturer's instructions

High Crowns

Description	Remedy
— Joint area is higher than the surrounding plasterboard and may result in shadowing across the joints 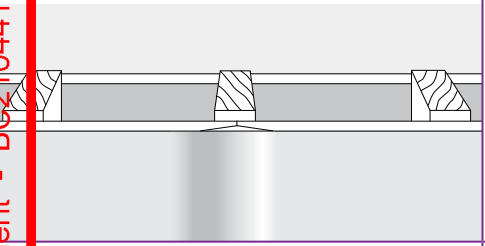	— Sand joints to flush surface (take care to avoid scuffing paper or joint tape by over-sanding)
Cause	**Prevention**
— Excessive compound over joint — Compound not feathered out beyond shoulders — Improper bedding of tape — Framing out of alignment or sheet edges not tight against framing — Improper adjustment of mechanical tools — Misuse of, or worn, tools	— Embed tape properly, using only enough compound to cover tape. Adequately feather compound

KDC - Approved Building Consent Document - BC210441 - Pg 368 of 512 - 30/08/2021 - ComplyNZ

Trim Lines/Tracks

Description

— Shrinkage of the joint adjacent to the paper tape. Looks like the tape is visible on the joint

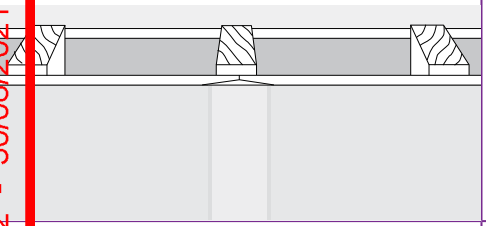

Remedy

— Lightly sand affected areas
— Apply a skim coat to the joint with an air drying compound, and sand and decorate

Cause

— The first coat of compound is not sufficiently dry before the second coat is applied. When the first coat dries it shrinks and pulls the tape back into the joint
— The second and top coat are too thin
— Compound is too thin or watery
— Inadequate drying between coats
— Poor drying conditions
— Slow drying due to excessive filling in one coat
— Premature paint application

Prevention

— Allow joint compound to fully dry between coats

Trim Defects

Description

— Cracks appearing at the edge of GIB® Goldline® Platinum trims

Remedy

— Remove all poorly bonded trims and reapply compound and trims as recommended

Cause

— Taping compound drying too fast, due to high temperatures and low humidity (or excessive drafts) or not enough compound
— Improper application, such as over-dilution of compound, use of wrong compound, excessive compound under tape, or no second coat over tape
— Cold, wet application resulting in poor bond

Prevention

— Do not install at temperatures below 10˚C. During cold weather, control heat at a minimum 10˚C and supply good ventilation. In hot, dry conditions, place shielding devices over room openings to prevent drafts. Do not apply joint treatment over hot surfaces. Lightly wet down floors if room humidity is too low
— Avoid practices listed under “Causes” opposite

KDC - Approved Building Consent Document - BC210441 - Pg 369 of 512 - 30/08/2021 - ComplyNZ

Nail/Screw Pops

Description

- Protrusions or bumps directly over the nail/screw head
- Rupture of the surface around nail/screw head
- Looks like nail/screw head protruding above the surface of the board

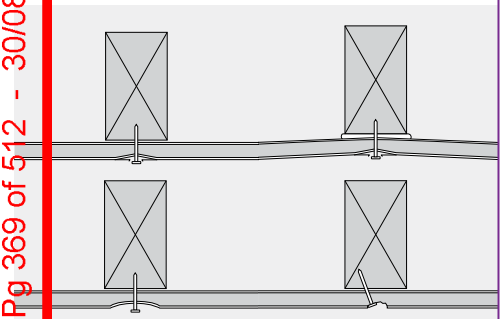

Remedy

- Nail pops that occur after at least one month's heating cycle are probably caused by timber shrinkage. Because further shrinkage is likely to occur and pops reappear, do not repair until the end of a heating season
- A screw should be reapplied 50mm from the popped fastener. Drive in a new fastener whilst applying firm pressure, to ensure firm contact with framing. Use a nail punch to seat the popped fastener beneath the surface of the plasterboard
- Remove compound. Apply two coats of setting compound followed by an air dry compound coat, then redecorate

Cause

- Timber shrinkage (timber shrinks as it dries, causing the fastener to protrude). Nail/screw pops may not become apparent for some considerable time after installation
- Fixing through glue – if screws or nails are applied through adhesive, a pop can occur as the glue dries and shrinks back; pulling the plasterboard closer to the framing member
- Plasterboard not held in close contact with the framing members. If the plasterboard is not held firmly against the stud while fixing, it increases the possibility of over-driving the nail (resulting in a blister-like defect the size of the hammerhead)
- Overdriven or skewed nails/screws can puncture the face paper, which results in no holding power
- Air trapped between the fixture and the compound, when the compound is placed
- Nail heads/screw heads puncturing face paper

Prevention

- Avoid timber shrinkage by using GIB® Rondo® metal ceiling battens for ceilings or kiln dried timber. Close in the building and protect the framing from the elements as soon as possible. Ensure that timber moisture content is 18% or less at the time of lining. Use of steel battens for large ceiling areas will eliminate shrinkage factors
- Fixing through glue – for walls, use nails/screws around the perimeter and GIBFix One® or GIBFix® All-Bond adhesive in the centre of the sheet. No mechanical fastener should be within 200mm of an adhesive daub. Never nail/screw through glue
- Plasterboard not in close contact with the framing members – when fixing ceilings, fix the centre of the plasterboard first. In all cases hold the plasterboard firm against the framing member whilst fixing
- Drive nails/screw in straight so they are neatly seated slightly below the surface of the sheet
- Apply compound in critical light areas by pressing the compound into the fixings, rather than trowelling it on. This removes trapped air

KDC - Approved Building Consent Document - BC210441 - Pg 370 of 512 - 30/08/2021 - ComplyNZ

Peaking

Description

- A condition where joints are visible under critical lighting
- More prevalent when board has been installed in cold weather
- Often called ridging or beading
- Looks like a continuous ridge along the length of the joint, with a uniform peak-like pattern at the centre
- Commonly occurs in conjunction with 'nail popping'

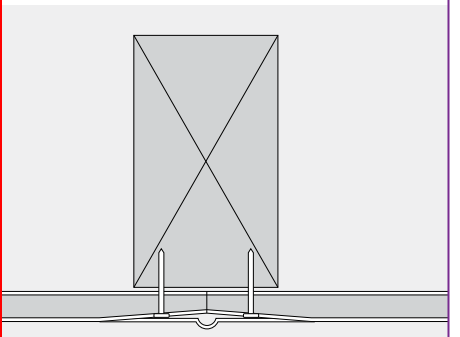

Remedy

- Ridges must only be repaired after a full heating cycle (6 months to a year). Mid-summer is generally the best time for rectifications
- Apply a coat of setting compound over the joints using a 300mm trowel to widen the joint. Scrape back and apply a light coat of a topping coat. Reseal affected area. Examine the surface with harsh lighting to determine whether the ridge has been concealed. If all right, then decorate

Cause

- Excessive gaps (i.e. over 2mm) left between sheets
- Timber movement due to excessive moisture content of timber at time of lining and subsequently drying out. This is more prevalent with 10mm plasterboard than thicker plasterboards
- No gaps at the base of wall sheets. This can cause pressure on the base of the sheets thus transferring tension to the joints
- Inadequate ventilation with concrete floor slabs, resulting in a build-up of water vapour

Prevention

- Use GIB® Rondo® metal ceiling battens on ceilings
- Ensure timber framing moisture content is 18% or less at time of lining
- Use a back blocking system on ceilings
- Gaps between sheets should be pre-filled with a setting compound and allowed to completely dry before application of tape and subsequent coats of compound
- Always allow a 5mm-10mm gap at the base of wall sheets to allow for shrinkage of the wall plates and studs
- Ensure compound materials are maintained at a minimum temperature of 10ºC during, and following, installation. Allow adequate ventilation

Peeling/Flaking, Severe Cracking

Description

- Large flakes that adhere loosely to the surface
- This problem is an extension of cracking and the causes and remedies are the same

KDC - Approved Building Consent Document - BC210441 - Pg 371 of 512 - 30/08/2021 - ComplyNZ

Shrinkage

Description
- Compound shrinking back when it dries, causing a depression at the joint or on a fastener
- Looks like depressions at the joint

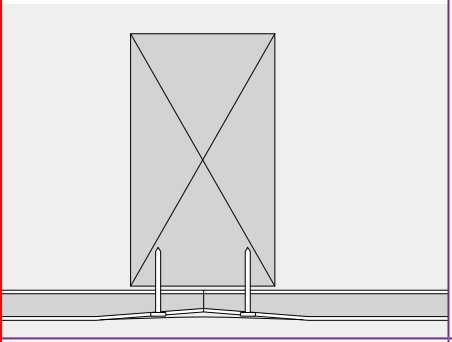

Remedy
- Lightly sand affected areas and apply air drying compound, then sand (using 220 grit or finer sand paper)
- Seal repaired areas and then re-decorate

Cause
- Compound too thin or watery
- Inadequate drying between coats
- Slow drying due to excessive filling in one coat
- Under slow drying conditions, joints and plasterboard may hold moisture for weeks

Prevention
- Provide proper drying conditions for compound. The two setting coats must be thoroughly dry prior to top coating. The top coat must be thoroughly dry prior to application of sealer
- Use compound at heaviest workable consistency and allow to stand for 2–3 minutes before applying
- In slow drying conditions apply a number of thinner coats rather than a few thick coats
- Under slow drying conditions use shorter set time joint compounds
- Allow joint compound to fully dry between coats

Paint Checking/Cracking

Description
- Small splits or star shape cracks on paint film surface

Remedy
- Remove paint allow joint compound to fully dry, repair any damage and reapply paint (as per manufacturer's instructions)

Cause
- Joint or topping compound not fully dry before paint application
- Paint not fully dried before next application
- Paint applied too thick
- Incorrect paint used

KDC - Approved Building Consent Document - BC210441 - Pg 372 of 512 - 30/08/2021 - ComplyNZ

Wavy surfaces

Description

- Plasterboards are not flat but have a bowed, dished or undulating surface
- Studs or ceiling joists not on the same plane as other framing members
- A twisted framing member
- Shadows being cast across the joint
- Plasterboard forced into place

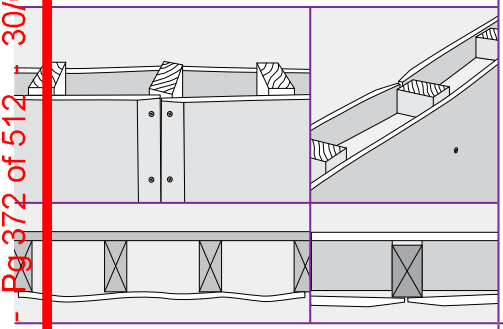

Remedy

- It is extremely difficult to rectify some of these problems without having to resort to full replacement of the linings after rectifying underlying factors
- Replace all warped or crooked studs

Cause

- Framing oversights
- Framing out of alignment with adjacent framing, making it difficult to bring the sheet into firm contact with framing members
- Excessive moisture in the timber framing can also cause warping, twisting or bowing as it dries
- Fixing the perimeter of the sheet prior to the centre
- Fixing of damp plasterboard
- Excessive loading from insulation or light fittings causing too much weight on plasterboard
- Incorrect placement of vapour barrier causing moisture build-up within the plasterboard
- Exceeding maximum span of fasteners when fixing
- Not allowing a 5mm–10mm gap between the floor and the plasterboard
- Incorrect fastening sequence for lining light gauge steel framing
- High temperatures in the ceiling space causing board expansion, particularly in skillion roofs with poor ventilation
- Incorrect storage – storing of plasterboard on edge on damp concrete floors

Prevention

- Timber members must be brought into alignment
- Check stud, batten and joist alignment, correcting wherever necessary
- Always fix from the centre outwards
- Sheets must be touch fitted and not forced into place

KDC - Approved Building Consent Document - BC210441 - Pg 373 of 512 - 30/08/2021 - ComplyNZ

Fibre Raise Adjacent to Joint Areas

Description
— A shadow adjacent to the stopped area

Prevention
— Lightly sand between all coats

Cause
— Commonly encountered with spray applied sealer and top coats which have not been lightly sanded back between coats
— Also common where alkyd sealers are used and not sanded back before the application of top coats
— Excessive sanding of paper raising fibres

Compound Defects

Grit
— Small pieces of raw material or contaminant that show up when the compound is trowelled

Shrinkage
— The compound shrinks back into the joint when it dries. Caused by thick coats of compound, not allowing the compound to dry between coats and using incorrect mixing ratios

Seeding/Lumps
— Small lumps of hard compound that can form towards the end of a compounds working time. Can be due to contamination, over mixing, dirty tools, or particles of dry compound left in the mixing bowl

Inconsistent Set Time
— Setting compounds having a different set time to those stated on the bag. There are a number of probable causes including contamination, particles of dry compound left in the mixing bowl, variable water temperature, over mixing and re-working, as well as inappropriate product storage

Board Defects

Delamination
— Separation of the paper ply from the main body of the paper. Paper still adhered to the core with weak inter-ply bond.

Peeler
— Paper liner coming away cleanly from the core with no paper adhesion. Caused by calcinated (over dried) board. Also occurs when the plasterboard is damp

End Split
— Peeling or splitting 50mm–100mm from end of sheet
— Usually caused by soft board at the knives during the manufacture of plasterboard

Shoulder
— The thickness of the board at the inner edge of the taper is greater than that in the body of the board itself

Chipped or Hooked Edges
— Scalloped or hooked. Taper does not have regular profile
— Can be caused during manufacture or incorrect storage of the board edge on damp concrete surfaces

Soft Edges
— Soft core or calcinated due to over drying of the edge
— Damp due to storage on damp concrete surfaces

Blisters
— Intermittent splitting of the core and paper

KDC - Approved Building Consent Document - BC210441 - Pg 374 of 512 - 30/08/2021 - ComplyNZ

GIB®

OR MORE INFORMATION VISIT

gib.co.nz

R CALL THE GIB® HELPLINE

0800 100 442

6221M Mapei Tiling Solutions

Mapei Products (MBP (NZ) Ltd)
+64 09 9211994
enquiries@mapei.co.nz
www.mapei.co.nz

SUPPORTING DOCUMENTS

BRANZ Appraisal 484

Ref 10514. Uploaded 10 Aug 2020

Purpose: Performance

KDC - Approved Building Consent Document - BC210441 - Pg 375 of 512 - 30/08/2021 - ComplyNZ

KDC - Approved Building Consent Document - BC210441 - Pg 376 of 512 - 30/08/2021 - ComplyNZ

BRANZ Appraised

Appraisal No. 484 [2018]

MAPEGUM WPS, MAPELASTIC, MAPELASTIC SMART, MAPELASTIC TURBO AND MAPELASTIC AQUADEFENSE WET AREA MEMBRANES

Appraisal No. 484 (2018)

This Appraisal replaces BRANZ Appraisal No. 484 (2012)



BRANZ Appraisals

Technical Assessments of products for building and construction.

Mapei New Zealand Ltd
PO Box 12 326
Penrose
Auckland
Tel: 09 921 1994
Fax: 09 921 1993
Web: www.mapei.co.nz

BRANZ
1222 Moonshine Rd,
RD 1, Porirua 5381
Private Bag 50 908
Porirua 5240,
New Zealand
Tel: 04 237 1170
branz.co.nz

Product

1.1 Mapegum WPS and Mapelastic AquaDefense are one component, liquid-applied waterproofing membranes for internal applications under ceramic or stone tile finishes.

1.2 Mapelastic, Mapelastic Smart and Mapelastic Turbo are two-component liquid applied waterproofing membranes suitable for internal applications on substrates under ceramic or stone tile finishes.

Scope

2.1 Mapegum WPS, Mapelastic, Mapelastic Smart, Mapelastic Turbo and Mapelastic AquaDefense Wet Area Membranes have been appraised for use as waterproofing membranes for the internal wet areas of buildings, within the following scope:

- on floor substrates of concrete, flooring grade particle board, plywood, compressed fibre cement sheet and fibre cement sheet tile underlay, and on wall substrates of concrete, concrete masonry, wet area fibre cement sheet lining systems and wet area plasterboard lining systems; and,
- when protected from physical damage by ceramic or stone tile finishes; and,
- where floors are designed and constructed such that deflections do not exceed 1/360th of the span.

2.2 The use of Mapegum WPS, Mapelastic, Mapelastic Smart, Mapelastic Turbo and Mapelastic AquaDefense Wet Area Membranes on concrete slabs where hydrostatic or vapour pressure is present is outside the scope of this Appraisal.

2.3 Movement and control joints in the substrate must be carried through the membrane and tile finish. The design and construction of the substrate and movement and control joints is specific to each building, and is therefore the responsibility of the building designer and building contractor and is outside the scope of this Appraisal.

2.4 The ceramic or stone tile finishes are outside the scope of this Appraisal.

2.5 The membranes must be installed by trained applicators, approved by Mapei New Zealand Ltd, to the conditions of the Technical Data Sheet (TDS) of the products.

Readers are advised to check the validity of this Appraisal by referring to the Valid Appraisals listing on the BRANZ website, or by contacting BRANZ.

KDC - Approved Building Consent Document - BC210441 - Pg 377 of 512 - 30/08/2021 - ComplyNZ

Building Regulations

New Zealand Building Code (NZBC)

3.1 **In the opinion of BRANZ, Mapegum WPS, Mapelastic, Mapelastic Smart, Mapelastic Turbo and Mapelastic AquaDefense Wet Area Membranes if designed, used, installed and maintained in accordance with the statements and conditions of this Appraisal, will meet the following provisions of the NZBC:**

Clause B2 DURABILITY: Performance B2.3.1 (b) 15 years and B2.3.2. Mapegum WPS, Mapelastic, Mapelastic Smart, Mapelastic Turbo and Mapelastic AquaDefense Wet Area Membranes meet these requirements. See Paragraph 9.1.

Clause E3 INTERNAL MOISTURE: Performance E3.3.6. Interior wet area floors and walls incorporating Mapegum WPS, Mapelastic, Mapelastic Smart, Mapelastic Turbo and Mapelastic AquaDefense Wet Area Membranes will meet this requirement. See Paragraphs 11.1 - 11.7.

Clause F2 HAZARDOUS BUILDING MATERIALS: Performance F2.3.1. Mapegum WPS, Mapelastic, Mapelastic Smart, Mapelastic Turbo and Mapelastic AquaDefense Wet Area Membranes meet this requirement and will not present a health hazard to people.

Technical Specification

4.1 Materials supplied by Mapei New Zealand Ltd are as follows:

- **Mapegum WPS** - A one-part, fast drying, polymer-based, ready-to-use, liquid-applied membrane. It is supplied as a light grey-coloured paste in 5, 10 and 25 kg buckets.
- **Mapelastic** - A two-part, flexible, cementitious, liquid-applied membrane. It is supplied as a Part A powder in 24 kg multi-wall bags and a Part B liquid in 8 kg plastic containers. When dry, the membrane is grey in colour.
- **Mapelastic Smart** - A two-part, flexible, cementitious, liquid-applied membrane. It is supplied as a Part A powder in 20 kg multi-wall bags and a Part B liquid in 10 kg plastic containers. When dry, the membrane is light grey in colour.
- **Mapelastic Turbo** - A two-part, cementitious, liquid-applied membrane. It is supplied as a Part A powder in 20 kg multi-wall bags and a Part B liquid in 16 kg containers. When dry, the membrane is light grey in colour.
- **Mapelastic AquaDefense** - A one-part solvent free, ultra-quick drying synthetic resin based paste in water dispersion liquid applied membrane. It is supplied as a light blue coloured paste in 15 kg drums.
- **Mapeband and Mapeband Gaskets** - A rubber-coated polyester tape for waterproofing expansion joints and sealing around drains and pipes. Available as a tape 120 mm wide in rolls 50 m long, and also in ready-made internal and external corners (90 and 270 degrees) and pipe gaskets 118 x 118 mm and 300 x 300 mm, "T" profiles 515 mm x 315 mm and cross profiles 515 x 515 mm.
- **Mapeband PE120** - A PVC fabric tape used to reinforce wall/wall and floor/wall joints. It is only used with Mapegum WPS and Mapelastic AquaDefense. Available as a tape 120 mm wide in rolls 10 m and 50 m long, and also as preformed angles 90° and 270°.
- **Mapetex Sel** - A macro-holed non-woven fabric, used to reinforce the first and second layer of the waterproofing membranes. It is supplied as a polypropylene, white fabric in rolls 100 mm, 200 mm and 1.0 m wide x 25 m long.
- **Mapenet 150** - A glass fibre mesh used to reinforce the membranes. It is supplied as a blue mesh in rolls 1.0 m wide and 50 m long.
- **Mapeband SA** - A self-adhesive Butyl Rubber tape used to reinforce all joints. It is supplied as a 2.0 mm thick, 100 mm wide tape in rolls 25 m long.
- **Mapei Primer 3296** - A acrylic primer for absorbent surfaces. It is an opaque colour and supplied in 5 and 10 kg drums.

Readers are advised to check the validity of this Appraisal by referring to the Valid Appraisals listing on the BRANZ website, or by contacting BRANZ.

KDC - Approved Building Consent Document - BC210441 - Pg 378 of 512 - 30/08/2021 - ComplyNZ

Handling and Storage

5.1 All materials must be stored inside, up off concrete floors, in dry conditions, out of direct sunlight and out of freezing conditions. The membrane products have a shelf life of 24 months from date of manufacture in the original unopened packaging. Once opened, the products must be used within 3 months.

Technical Literature

6.1 Refer to the Appraisals listing on the BRANZ website for details of the current Technical Literature for the Mapegum WPS, Mapelastic, Mapelastic Smart, Mapelastic Turbo and Mapelastic AquaDefense Wet Area Membranes. The Technical Literature must be read in conjunction with this Appraisal. All aspects of design, use, installation and maintenance contained in the Technical Literature and within the scope of this Appraisal must be followed.

Design Information

General

7.1 Mapegum WPS, Mapelastic, Mapelastic Smart, Mapelastic Turbo and Mapelastic AquaDefense Wet Area Membranes are for use in buildings where an impervious waterproof membrane is required to floors and walls to prevent damage to building elements and adjoining areas.

7.2 Mapegum WPS and Mapelastic AquaDefense are designed to be used where a one-component product is preferred.

7.3 The membranes must be protected from physical damage by the application of ceramic or stone tile finishes.

7.4 Movement and control joints may be required depending on the shape and size of the building or room, and the tile finish specified. Design guidelines can be found in the BRANZ Good Practice Guide - Tiling.

7.5 Timber framing must comply with NZS 3604, or where specific engineering design is used, the framing shall be of at least equivalent stiffness to the framing provisions of NZS 3604, or comply with the serviceability criteria of AS/NZS 1170. In all cases framing must be provided so that the maximum span of the substrate as specified by the substrate manufacturer is met and all sheet edges are fully supported. Timber framing systems supporting the substrates must be constructed such that deflections do not exceed 1/360th of the span. Where NZS 3604 is used, the allowable joist spans given in Table 7.1 shall be reduced by 20%.

Substrates

Plywood

8.1 Plywood must be a minimum of 17 mm thick complying with AS/NZS 2269, CD Grade Structural with sanded C face upwards and treated to H3 (CCA treated). LOSP treated plywood must not be used.

8.2 The plywood must be laid with the face grain at right angles to the floor joists. The plywood must be supported with dwangs or framing with a maximum span of 400 mm in each direction, fixed with 10g x 50 mm stainless steel countersunk head screws at 150 mm centres along the sheet edges and 200 mm through the body of the sheets.

Fibre Cement Compressed Sheet/Fibre Cement Sheet Tile Underlay

8.2 Fibre cement compressed sheet and tile underlay must be manufactured to comply with the requirements of AS/NZS 2908.2 and must be specified by the manufacturer as being suitable for use as a wet area substrate. Installation must be in accordance with the instructions of the manufacturer.

Particleboard

8.3 Particleboard must be specified for the end use in accordance with NZS 3602.

Readers are advised to check the validity of this Appraisal by referring to the Valid Appraisals listing on the BRANZ website, or by contacting BRANZ.

KDC - Approved Building Consent Document - BC210441 - Pg 379 of 512 - 30/08/2021 - ComplyNZ

Concrete and Concrete Masonry

8.4 Concrete and concrete masonry substrates must be to a specific engineering design meeting the requirements of the NZBC, such as concrete construction to NZS 3101, concrete slab-on-ground to NZS 3604 or NZS 4229 and concrete masonry to NZS 4229 and NZS 4230.

Wet Area Wall Linings

8.5 Plasterboard wall linings must be manufactured to comply with AS/NZS 2588, and be suitable for use in internal wet areas.

8.6 Fibre cement sheet must be suitable for use in wet areas and comply with AS/NZS 2908.2.

8.7 Installation of plasterboard or fibre cement wall linings must be carried out in accordance with the instructions of the manufacturer.

Durability

Serviceable Life

9.1 The Mapegum WPS, Mapelastic, Mapelastic Smart, Mapelastic Turbo and Mapelastic AquaDefense Wet Area Membranes, when subjected to normal conditions of environment and use, are expected to have a serviceable life of at least 15 years and be compatible with ceramic or stone tile finishes with a design service life of 15-25 years.

Maintenance

10.1 No maintenance of the membranes will be required provided significant substrate movement does not occur and the tile finish remains intact. Regular checks must be made of the tiled areas to ensure they are sound and will not allow moisture to penetrate. Any cracks or damage must be repaired immediately by repairing the tiles, grout and sealant.

10.2 In the event of damage to a membrane, the tiles must be removed and the membrane repaired by removing the damaged portion and applying a patch with sufficient overlap over the damaged section.

10.3 Drainage outlets must be maintained to operate effectively, and tile finishes must be kept clean.

Internal Moisture

11.1 Mapegum WPS, Mapelastic, Mapelastic Smart, Mapelastic Turbo and Mapelastic AquaDefense Wet Area Membranes are impervious to water and when appropriately designed and installed will avoid the likelihood of water penetrating behind linings or entering concealed spaces.

11.2 Surfaces must be finished with ceramic or stone tiles. A means of compliance with NZBC Clause E3.3.3 and E3.3.4 is given in NZBC Acceptable Solution E3/AS1, Paragraph 3.1.1 (b), 3.1.2 (b) and 3.3.1 (b).

11.3 Falls in showers and shower areas must be a minimum of 1 in 50. In unenclosed showers, falls must extend a minimum of 1500 mm out from the shower rose. Floor wastes and drainage flanges must be provided and the floor must fall to the outlet.

11.4 Mapegum WPS, Mapelastic, Mapelastic Smart, Mapelastic Turbo and Mapelastic AquaDefense Wet Area Membranes are suitable for use to contain accidental overflow to meet NZBC Clause E3.3.2. A means of compliance for overflow is given in NZBC Acceptable Solution E3/AS1, Paragraph 2.

11.5 The waterproofing membrane must completely cover shower bases, and for unenclosed showers it must extend a minimum of 1500 mm out from the shower rose. Further design guidance on waterproofing wet areas, including waterproofing walls and junctions can be obtained from AS 3740, the BRANZ Good Practice Guide - Tiling, and flooring and wall lining manufacturers.

11.6 Where water resistant wall finishes such as prefinished sheet materials are used they must be installed as per the NZBC requirements. They must flash over the membrane a minimum of 30 mm.

11.7 BRANZ recommends the entire floor be covered by a waterproof membrane for bath, shower and spa rooms where timber and plywood floors are used.

Readers are advised to check the validity of this Appraisal by referring to the Valid Appraisals listing on the BRANZ website, or by contacting BRANZ.

KDC - Approved Building Consent Document - BC210441 - Pg 380 of 512 - 30/08/2021 - ComplyNZ

Installation Information

Installation Skill Level Requirement

12.1 Installation of the membranes must be completed by trained applicators approved by Mapei New Zealand Ltd

12.2 Installation of substrates must always be carried out in accordance with the Mapegum WPS, Mapelastic, Mapelastic Smart, Mapelastic Turbo and Mapelastic AquaDefense Wet Area Membranes Technical Literature and this Appraisal by, or under the supervision of, a Licensed Building Practitioner (LBP) with the relevant Licence Class.

Preparation of Substrates

13.1 Substrates must be dry, clean and stable before installation commences. Surfaces must be smooth and free from nibs, sharp edges, dust, dirt or other materials such as oil, grease or concrete formwork release agents.

13.2 The relative humidity of concrete substrates must be 75% or less before membrane application. The concrete substrates can be checked for dryness by using a hygrometer as set out in BRANZ Bulletin No. 585.

13.3 All voids, cracks, holes, joints and excessively rough areas must be filled to achieve an even and uniform surface. Junctions of substrate abutments, such as at wall/floor and wall/wall junctions must have a reinforcement installed as set out in the Technical Literature.

13.4 Refer to the product manufacturer for correct priming requirements.

Membrane Installation

14.1 Installation must not be undertaken where the substrate surface temperature is below 8°C or above 35°C.

14.2 Mapelastic, Mapelastic Turbo and Mapelastic Smart require the liquid and powder to be mixed and left to stand for 5 minutes before re-mixing, then applying. Mapegum WPS and Mapelastic AquaDefense must be thoroughly stirred before application.

14.3 The membrane must be applied in a minimum of two coats at the rates set out in the Technical Literature. Subsequent coats must be applied in an opposite direction to the previous coat. The total finished system thickness of the Mapegum WPS must be a minimum of 1.0 mm, Mapelastic AquaDefense membrane must be a minimum of 1.0 mm and the Mapelastic, Mapelastic Turbo and Mapelastic Smart Membranes must be a minimum of 2.0 mm.

14.4 Application can be made by roller (medium/long nap), brush (long bristle), or a notched steel trowel (finished with a flat steel trowel).

14.5 Reinforcement fabric or Mapeband is bedded into the wet layer between coats to provide movement protection at wall/wall and wall/floor junctions, or any other areas such as joints in the flooring substrate, floor cracks, or around penetrations in the membrane. In all other situations, reinforcement provisions as set out in this Appraisal and the Technical Literature apply.

14.6 Clean up may be undertaken with water.

14.7 For further information refer to the product TDS.

Tiling

15.1 The membranes must be fully cured before tiling. The cured membranes must be protected at all times to prevent mechanical damage, so may require temporary covers until the finishing is completed.

15.2 Tiling must be undertaken in accordance with AS 3958.1 and the BRANZ Good Practice Guide - Tiling. The compatibility of the tile adhesive must be confirmed with the adhesive manufacturer or Mapei New Zealand Ltd.

Readers are advised to check the validity of this Appraisal by referring to the Valid Appraisals listing on the BRANZ website, or by contacting BRANZ.

KDC - Approved Building Consent Document - BC210441 - Pg 381 of 512 - 30/08/2021 - ComplyNZ

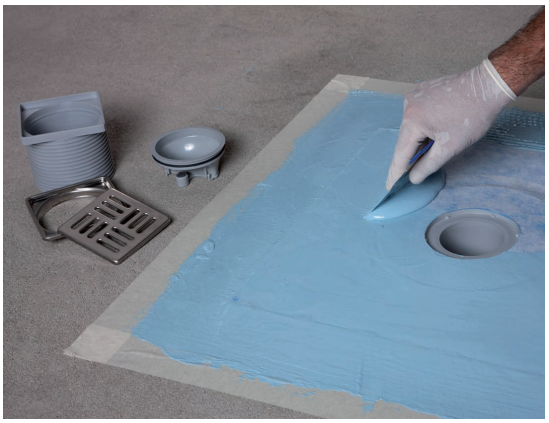

Impregnating Drain Vertical fabric with Mapelastic AquaDefense



Application of Mapeband to a wall-floor joint with Mapelastic AquaDefense



Application of the first coat of Mapelastic AquaDefense



Application of the second coat of Mapelastic AquaDefense

Readers are advised to check the validity of this Appraisal by referring to the Valid Appraisals listing on the BRANZ website, or by contacting BRANZ.

KDC - Approved Building Consent Document - BC210441 - Pg 382 of 512 - 30/08/2021 - ComplyNZ

Inspections

16.1 The Technical Literature must be referred to during the inspection of membrane installations.

16.2 Critical areas of inspection are:

- Construction of substrates, including crack control and installation of bond breakers and movement control joints.
- Moisture content of the substrate prior to the application of the membrane.
- Acceptance of the substrate by the membrane installer prior to application of the membrane.
- Installation of the membrane to the manufacturer's instructions, particularly installation to the correct thickness and use of reinforcement.
- Membrane curing and integrity prior to the installation of tiles including protection from mechanical damage during curing and prior to tile installation.

Health and Safety

17.1 Safe use and handling procedures for the membranes are provided in the Technical Literature. The materials must be used in conjunction with the relevant Material Safety Data Sheet.

Basis of Appraisal

The following is a summary of the technical investigations carried out:

Tests

18.1 The following testing has been undertaken by various organisations:

- Mapegum WPS and Mapelastic Wet Area Membranes in accordance with; EN 14891 for initial tensile adhesion strength, tensile strength after water contact, tensile adhesion strength after heat ageing, tensile adhesion strength after contact with lime water, tensile adhesion strength after contact with chlorine water, tensile adhesion strength after freeze-thaw cycles, waterproofing and crack bridging ability; DIN 53504 for tensile strength and maximum elongation after exposure to air and water immersion (Mapegum WPS only) and; Mapei internal method for water absorption after exposure and water immersion.
- Mapelastic Smart in accordance with EN 1502-4 for bond strength to concrete, freeze thaw, flexibility, static and dynamic crack bridging, water vapour permeability, impermeability to water and bond strength after water immersion, heat ageing, freeze-thaw and alkali ageing.
- Mapelastic in accordance with; EN 14891 for crack bridging after 28 days exposure to air, crack bridging after 7 days exposure to air and 21 days immersion in water, adhesion to concrete surface after 28 days exposure to air, adhesion to concrete surface after 28 days exposure to air and 21 days immersion in water; DIN 52615 for resistance to water vapour transmission and; Mapei internal method for deformability under low temperatures.
- Mapegum WPS in accordance with; EN 1384 for tensile adhesion strength after exposure and water immersion; UNI 8202/22 for water absorption after exposure and water immersion and; DIN 53505 for shore A hardness.
- Mapelastic AquaDefense in accordance with AS/NZS 4858 Appendix A including effect of heat ageing, bleach, detergent and water on tensile and elongation, water vapour transmission to ASTM E96-92 and cyclic movement resistance requirements of AS/NZS4858:2004 Appendix B. Testing to ANSI 118.10-1999 including seam strength, breaking strength, dimensional stability, resistance to fungi, static head and shear strength to ceramic tile and cement mortar. Also tensile adhesion on a plywood substrate and low temperature flexibility of the membrane.
- Mapelastic Turbo in accordance with EN1504-2 and EN14891 for water vapour permeability, capillary adsorbtion and permeability to water, permeability to water, freeze-thaw cycling, crack-bridging ability, pull off adhesion and bond strength. Also tensile adhesion on a plywood substrate.

18.2 The above test methods and results have been reviewed by BRANZ and found to be satisfactory.

Readers are advised to check the validity of this Appraisal by referring to the Valid Appraisals listing on the BRANZ website, or by contacting BRANZ.

KDC - Approved Building Consent Document - BC210441 - Pg 383 of 512 - 30/08/2021 - ComplyNZ

18.3 Testing of Mapegum WPS and Mapelastic has been undertaken by BRANZ for durability in accordance with AS/NZS 4858: 2004, Appendix A covering tensile strength and elongation after immersion in water, bleach, detergent, and after heat ageing.

18.4 Testing for suitability of Mapelastic over particleboard in accordance with AS/NZS 4858: 2004, Appendix C has been undertaken by BRANZ and found to be satisfactory.

Other Investigations

19.1 An assessment was made of the durability of the Mapegum WPS, Mapelastic, Mapelastic Smart, Mapelastic Turbo and Mapelastic AquaDefense Wet Area Membranes by BRANZ technical experts.

19.2 Site inspections have been carried out by BRANZ to examine the practicability of installation and to examine completed installations.

19.3 The Technical Literature has been examined by BRANZ and found to be satisfactory.

Quality

20.1 The manufacture of the membranes has not been examined by BRANZ, but details regarding the quality and composition of the materials used were obtained by BRANZ and found to be satisfactory.

20.2 The quality management system of the membranes manufacturer has been assessed and found to be satisfactory.

20.3 The quality of supply of the membrane system materials to the market is the responsibility of Mapei New Zealand Ltd.

20.4 Quality on site is the responsibility of the Mapei New Zealand Ltd trained applicators.

20.5 Designers are responsible for the building design, and building contractors are responsible for the quality of installation of the framing systems and substrates.

20.6 Building owners are responsible for the maintenance of the ceramic or stone tiles in accordance with the instructions of Mapei New Zealand Ltd.

Sources of Information

- AS/NZS 1170: 2002 Structural design actions.
- AS/NZS 2908.2: 2000 Cellulose-cement products – Flat sheet.
- AS/NZS 2269: 2012 Plywood-Structural.
- AS 3958.1: 2007 Guide to the installation of ceramic tiles.
- AS/NZS 4858: 2004 Wet area membranes.
- DIN 53504 May 1994 Determination of tensile stress/strain properties of rubber.
- EN 1348: 1997/A1 Adhesives for tiles – Determination of tensile adhesion strength for cementitious adhesives.
- EN 14891 March 2003 Liquid applied waterproofing membranes for use beneath ceramic tiling – Definitions, specifications and test methods.
- NZS 3101: 2006 The design of concrete structures.
- NZS 3602: 2003 Timber and wood-based products for use in buildings.
- NZS 3604: 2011 Timber-framed buildings.
- NZS 4229: 2013 Concrete masonry buildings not requiring specific engineering design.
- NZS 4230: 2004 Code of Practice for the design of masonry structures.
- Ministry of Business, Innovation and Employment Record of amendments - Acceptable Solutions, Verification Methods and handbooks.
- The Building Regulations 1992.
- Good Practice Guide - Tiling, BRANZ, April 2015.
- UNI 8202 – 22: 1987 Building. Water proof sheets. Determination of behaviour in water.

Readers are advised to check the validity of this Appraisal by referring to the Valid Appraisals listing on the BRANZ website, or by contacting BRANZ.

KDC - Approved Building Consent Document - BC210441 - Pg 384 of 512 - 30/08/2021 - ComplyNZ

In the opinion of BRANZ, Mapegum WPS, Mapelastic, Mapelastic Smart, Mapelastic Turbo and Mapelastic Aquadefense Wet Area Membranes are fit for purpose and will comply with the Building Code to the extent specified in this Appraisal provided they are used, designed, installed and maintained as set out in this Appraisal.

The Appraisal is issued only to Mapei New Zealand Ltd, and is valid until further notice, subject to the Conditions of Appraisal.

Conditions of Appraisal

1. This Appraisal:
   a) relates only to the product as described herein;
   b) must be read, considered and used in full together with the Technical Literature;
   c) does not address any Legislation, Regulations, Codes or Standards, not specifically named herein;
   d) is copyright of BRANZ.
2. Mapei New Zealand Ltd:
   a) continues to have the product reviewed by BRANZ;
   b) shall notify BRANZ of any changes in product specification or quality assurance measures prior to the product being marketed;
   c) abides by the BRANZ Appraisals Services Terms and Conditions;
   d) warrants that the product and the manufacturing process for the product are maintained at or above the standards, levels and quality assessed and found satisfactory by BRANZ pursuant to BRANZ's Appraisal of the product.
3. BRANZ makes no representation or warranty as to:
   a) the nature of individual examples of, batches of, or individual installations of the product, including methods and workmanship;
   b) the presence or absence of any patent or similar rights subsisting in the product or any other product;
   c) any guarantee or warranty offered by Mapei New Zealand Ltd.
4. Any reference in this Appraisal to any other publication shall be read as a reference to the version of the publication specified in this Appraisal.
5. BRANZ provides no certification, guarantee, indemnity or warranty, to Mapei New Zealand Ltd or any third party.

For BRANZ

Chelydra Percy
Chief Executive

Date of Issue:
09 February 2018

Readers are advised to check the validity of this Appraisal by referring to the Valid Appraisals listing on the BRANZ website, or by contacting BRANZ.

7112 Water Storage Tanks

Devan Tanks Brochure

Ref 21098. Uploaded 26 Feb 2021

Purpose: Performance

Devan Tanks Installation & Maintenance Guide

Ref 21099. Uploaded 26 Feb 2021

Purpose: Installation

KDC - Approved Building Consent Document - BC210441 - Pg 385 of 512 - 30/08/2021 - ComplyNZ

DEVAN
TANKS



KDC - Approved Building Consent Document - BC210441 - Pg 386 of 512 - 30/08/2021 - ComplyNZ

PROUDLY
MADE IN TAURANGA
SINCE 1992



Devan Tanks are developed, designed and produced to the highest standards for New Zealand conditions.

www.devan.co.nz

WHY CHOOSE DEVAN?

Devan pioneered New Zealand's first large volume plastic water tank with the first development starting in the late 1980's.

Since then Devan has gone on to develop a full range of water tanks, septic tanks, wastewater systems and key accessories to assist with all your water based needs.

Devan Tanks are only manufactured from the highest quality polyethylene which is ideally suited to our moulding technique giving long life and trouble free service.

KDC - Approved Building Consent Document - BC210441 - Pg 387 of 512 - 30/08/2021 - ComplyNZ

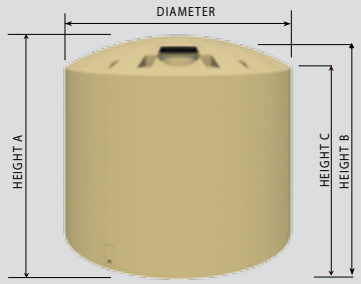

TT30 - 30,000 Litres

DIAMETER: 3.7 metres
HEIGHT A: 3.1 metres
HEIGHT B: 2.9 metres
HEIGHT C: 2.7 metres
WEIGHT: 475 kg
MANWAY: 435mm
OUTLETS: 2 x 50mm
THREAD: Brass BSP

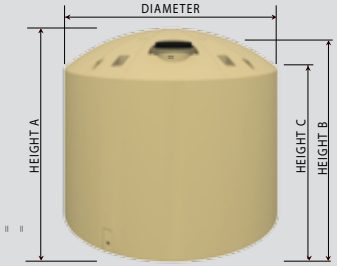

TT25 - 25,000 Litres

DIAMETER: 3.5 metres
HEIGHT A: 3.0 metres
HEIGHT B: 2.8 metres
HEIGHT C: 2.5 metres
WEIGHT: 375 kg
MANWAY: 435mm
OUTLETS: 2 x 50mm
THREAD: Brass BSP

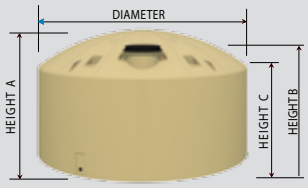

TT15 - 15,000 Litres

DIAMETER: 3.5 metres
HEIGHT A: 2.0 metres
HEIGHT B: 1.8 metres
HEIGHT C: 1.6 metres
WEIGHT: 250 kg
MANWAY: 435mm
OUTLETS: 2 x 50mm
THREAD: Brass BSP

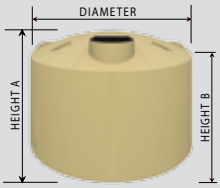

TT03 - 3,500 Litres

DIAMETER: 2.0 metres
HEIGHT A: 1.3 metres
HEIGHT B: 1.1 metres
WEIGHT: 65 kg
MANWAY: 383mm
OUTLETS: 1 x 50mm
THREAD: Brass BSP

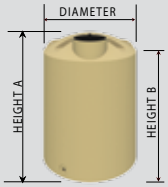

TT02 - 2,000 Litres

DIAMETER: 1.4 metres
HEIGHT A: 1.8 metres
HEIGHT B: 1.6 metres
WEIGHT: 50 kg
MANWAY: 383mm
OUTLETS: 1 x 50mm
THREAD: Brass BSP

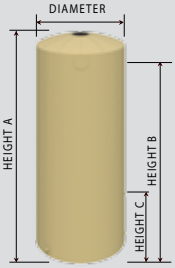

TT01 - 1,000 Litres

DIAMETER: 0.87 metres
HEIGHT A: 2.0 metres
HEIGHT B: 1.8 metres
HEIGHT C: 0.4 metres
WEIGHT: 35 kg
MANWAY: 150mm
OUTLETS: 2x50mm & 2x15mm
THREAD: Brass BSP

OUR 20 YEAR GUARANTEE

Devan Tanks offers a no nonsense 20 year guarantee on all our domestic water tanks. Our tanks are manufactured to the highest standards utilising advanced technology and production procedures. Full installation guides are available to ensure your installation meets the warranty conditions.



MOULDED OUTLETS

Devan Tanks are the only tank that comes with brass (or stainless steel) moulded in outlets. Having metal outlets allows for an easy plumb that is solid and eliminates any risk of cross threading. Better yet, our big tanks come with two of them as standard!

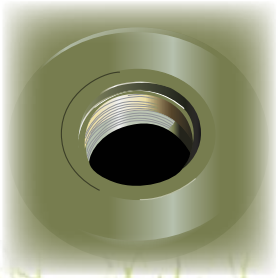



Devan Colours	Dark Green	Olive Green	Mist Green	Black	Beige	Birch Grey	Light Grey	Slate Grey	Mountain Blue	White	Clay Brown
Colorsteel Colours	Permanent Green	Karaka	Mist Green	Ebony	Desert Sand	Cloud	Gull Grey	Iron Sand	Denim Blue	White	Lignite

Please note that the colours represented above are the best match possible within screen and printing variations. Colorsteel colours are a guide only not colour matches.

KDC - Approved Building Consent Document - BC210441 - Pg 388 of 512 - 30/08/2021 - ComplyNZ

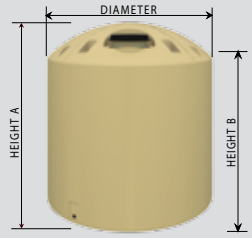

TT10 - 10,000 Litres

DIAMETER: 2.5 metres
HEIGHT A: 2.6 metres
HEIGHT B: 2.2 metres
WEIGHT: 225 kg
MANWAY: 435mm
OUTLETS: 2 x 50mm
THREAD: Brass BSP

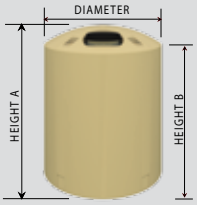

TT05 - 5,500 Litres

DIAMETER: 1.9 metres
HEIGHT A: 2.3 metres
HEIGHT B: 2.0 metres
WEIGHT: 112.5 kg
MANWAY: 435mm
OUTLETS: 1 x 50mm
THREAD: Brass BSP

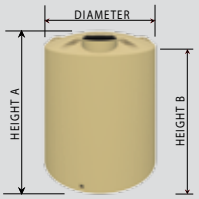

TT04 - 4,000 Litres

DIAMETER: 1.7 metres
HEIGHT A: 1.9 metres
HEIGHT B: 1.8 metres
WEIGHT: 75 kg
MANWAY: 383mm
OUTLETS: 1 x 50mm
THREAD: Brass BSP

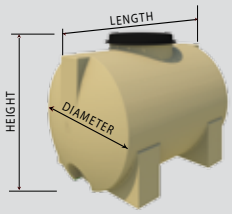

TT007 - 750 Litres

LENGTH: 1.3 metres
HEIGHT: 1.0 metres
DIAMETER: 0.9 metres
WEIGHT: 30 kg
MANWAY: 435mm

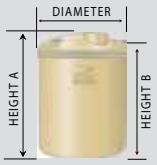

TT006 - 600 Litres

DIAMETER: 0.86 metres
HEIGHT A: 1.2 metres
HEIGHT B: 1.1 metres
WEIGHT: 20 kg
MANWAY: 190mm
OUTLET: 1 x 50mm
THREAD: Brass BSP

FREE DELIVERY
ALL SIZES WITHIN NORTH ISLAND



CERTIFIED MATERIAL

Devan Tanks are manufactured from the highest quality food grade polyethylene which is ideally suited to our moulding technique giving long life and trouble free service. Polyethylene cannot rot or corrode, and is ultra violet stabilised for New Zealand's harsh environmental conditions. It will not leach or taint your drinking water.

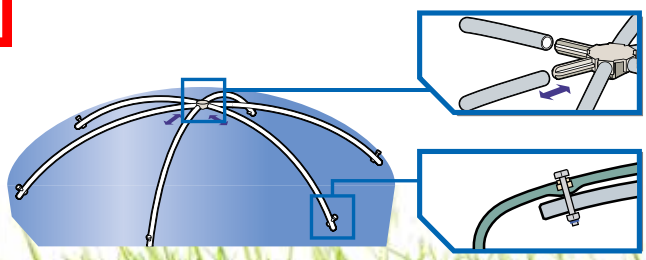

SUPER-STRONG DOME

The unique Devan Spaceframe provides for maximum strength in the dome of your tank which means it won't pop in when you are installing or servicing your tank nor will extreme snow loading have an effect. (Large tanks only)

ACCESSORIES

Devan have carefully selected a few key accessories to assist with your water collection, storage and use needs. Give some thought to what you may need to go with your tank and talk to one of the friendly team when ordering.








- First flush diverters
- Leaf/debris diverters
- Level indicators/gauges
- Plumbing kits
- Water pumps
- Pump Covers
- Uniseals
- UV systems
- Overflow kits
- Tank vents
- Float valves
- Connector kits

KDC - Approved Building Consent Document - BC210441 - Pg 389 of 512 - 30/08/2021 - ComplyNZ

DEVAN TANKS

Tauranga Factory & Sales
PO Box 2602
125 Birch Avenue
Tauranga
Phone: 07 578 8726
Free Phone: 0800 338 268
Email: tauranga@devan.co.nz

Buy online or find more information @ www.devan.co.nz

KDC - Approved Building Consent Document - BC210441 - Pg 390 of 512 - 30/08/2021 - ComplyNZ

DEVAN

Installation & Maintenance Guide

Devan Water Tanks



Please read these guidelines before installation begins.

Failure to properly prepare and install your tank correctly or continue with ongoing maintenance will void your warranty.

V1.1

KDC - Approved Building Consent Document - BC210441 - Pg 391 of 512 - 30/08/2021 - ComplyNZ

CONTENTS

DELIVERY OF YOUR DEVAN TANK Page 3
FOUNDATION AND LOCATION Page 4
BOTTOM OUTLET PLUMBING GUIDELINES Page 6
TOP PLUMBING Page 8
WATER PUMP INSTALLATION Page 10
WARRANTY POLICY Page 11
WATER TANK DIMENSIONS Page 14
CLEANING AND MAINTENANCE Page 17
WARRANTY REGISTRATION Page 20

Devan Water Tanks. Made in New Zealand for New Zealand Conditions!

In order to gain maximum benefit from your Devan water tank, we have outlined the following instructions for installation and setup. Please read all these instructions carefully before installing your tank. The tank warranty will be void if the installation instructions are not adhered to.

DELIVERY OF YOUR DEVAN TANK

Devan water tanks are delivered by road to your gate. Transportation to the actual site and installation is the risk and responsibility of the purchaser. Where there is easy and suitable road access, our drivers may agree to off-load closer to the installation site, however this will be at the purchaser's risk. On arrival please make sure that somebody is available to help our drivers off-load your tank.

Our drivers will phone the person nominated at the time of order on the morning of delivery to confirm details. They will advise an approximate delivery time. If the driver is unable to get hold of the nominated contact person, the tank will be off-loaded at the most convenient location at the site and it will be the purchasers responsibility to relocate the tank at their risk and responsibility.

If you have special access issues, please make sure these are made known either to the Devan sales team or to the driver. Examples of such issues include truck only access in tight spaces, farm gate entry as opposed to main driveway or tanker track entry or no wet weather access.



KDC - Approved Building Consent Document - BC210441 - Pg 392 of 512 - 30/08/2021 - ComplyNZ

FOUNDATION AND LOCATION

A full Devan tank is extremely heavy (up to 30 tonnes). Be thoughtful in selecting your tank location.

When installing the Devan tank, choose a firm and level area that is free from any projections. Elevated locations must have a solid floor and be strong enough to withstand wind loads in conjunction with the weight of a full tank.

A level foundation is required for tanks 5,000 litres and larger. Concrete, quarry fines (<7mm), pumice and sand are all suitable.

Sand is the recommended option. The sand base needs to be 100mm deep, 500mm greater than the tank diameter and most importantly, free from any sharp objects or projections such as rocks, roots or stones.

The sand base must be retained at all times. Pipe tank overflow well clear of the sand base to ensure overflowing water does not aid erosion.

In high wind areas such as hilltops, the Devan tank can be secured to the ground using all four lifting lugs. Do not overtighten the tie-downs or damage will result.

Devan water tanks are not designed for in-ground installation but can be buried up to 500mm and back filled with clean fill. If further depth is required tanks must not be buried any further than a maximum of 1000mm below ground level keeping a free space of at least 500mm around the tank. This space should have drainage installed and the gap filled with bark so it is not a trap hazard for small animals or children.

Devan tanks can be recessed into banks or similar, providing the tank is not backfilled against and there is free space of at least 500mm around the tank.

Do not install water tanks over buried pipes, cables or any other utility connections which may require servicing or maintenance.

Do not install water tanks over underground structures such as cellars, septic tanks, sewage canals, etc.

Do not install water tanks where they could pose a potential hazard to life or property. eg under foundations or within a building.

KDC - Approved Building Consent Document - BC210441 - Pg 393 of 512 - 30/08/2021 - ComplyNZ

FOUNDATION AND LOCATION - CONTINUED

In areas prone to rabbit or other burrowing animals it is advisable to bury wire mesh to a depth of at least 600mm in a narrow trench around the foundation parameter.

In areas where livestock have access to the tank, the area surrounding the tank should be fenced to a minimum of 1.0 metre from the tank, to avoid any damage to the tank wall or outlet fittings.

Where the tank needs to be lifted into place, all four lifting eyes must be used in doing so. The lifting eyes are not rated sufficiently to be used with any water in the tank.

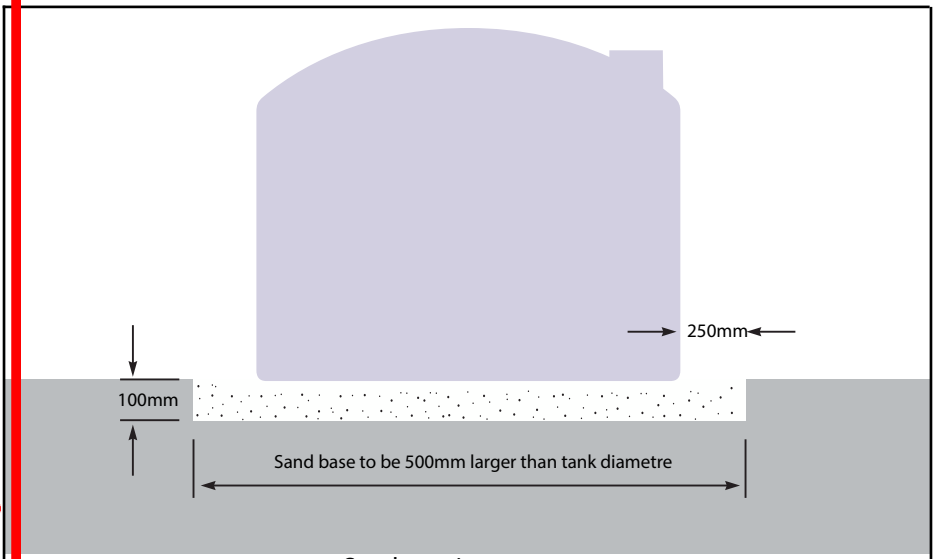

Sand requirements

30,000L	1.4m3
25,000L	1m3
15,000L	1m3
10,000L	0.75m3
5,000L	0.50m3

KDC - Approved Building Consent Document - BC210441 - Pg 394 of 512 - 30/08/2021 - ComplyNZ

KDC - Approved Building Consent Document - BC210441 - Pg 395 of 512 - 30/08/2021 - ComplyNZ

BOTTOM OUTLET PLUMBING GUIDELINES

Bungs are screwed in loosley for transport only. If used permanently, please remove the bung and Teflon tape the threads and screw back in. Do not overtighten the bungs if they are to be refitted. This procedure must be completed before filling the tank.

Because polyethylene water tanks expand when full, plumbing to the tank must be flexible. Tanks will expand 30 to 40mm from new when filled for the first time. Tanks will contiune to expand up to 100mm over their life span.

All plumbing attached to the bottom of the tank must be done correctly with all base connections flexible and free from stress. Plumbing kits are recommended and are available from Devan in 25mm, 32mm and 50mm sizes.

Polyethylene pipe does not constitute flexible plumbing. Flexi-hose needs to be used to provide sufficient flexibility.

No extra penetrations are to be cut into the walls of the tank without written approval of the manufacturer. Doing so will seriously affect the structural integrity of the tank and could lead to premature failure.

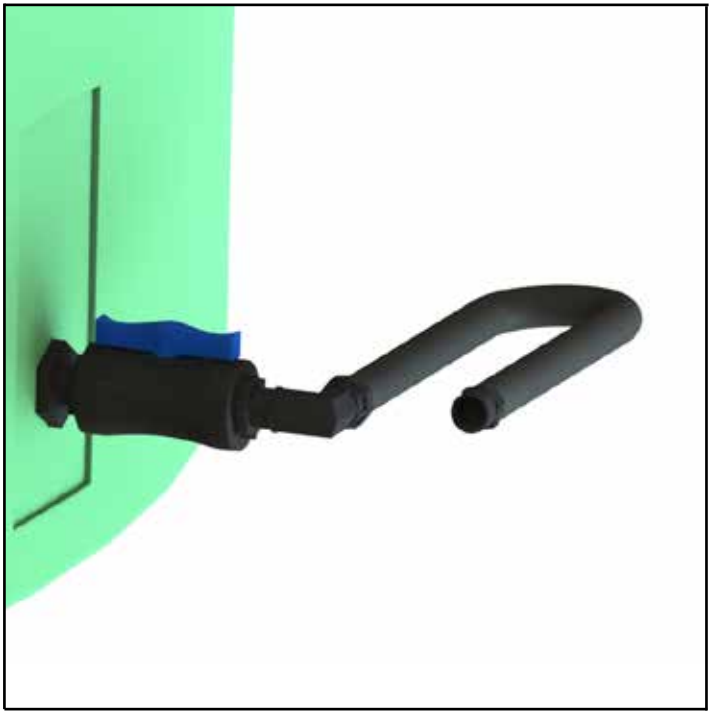

25mm Plumbing Kit - TAKPL25

BOTTOM OUTLET PLUMBING GUIDELINES - CONTINUED

There are specially designed mounting areas on the wall of the tank for outlet plumbing with brass fittings moulded-in for extra plumbing strength. These fittings are pre-drilled and tapped ready for use. These moulded-in fittings are raised off the bottom of the tank to prevent sludge pick-up and to retain sufficient weight (up to approx. one tonne in large tanks) making the tank more stable in exposed areas.

It is not recommended to install tank fittings anywhere else in the tank wall as this will create a stressed point in the tank structure and void the warranty. If an outlet fitting is required at a specific level, connect an internal vertical pipe to the desired level from the inside of the provided wall mounted outlet. These Restricted height outlets are available for purchase from Devan.

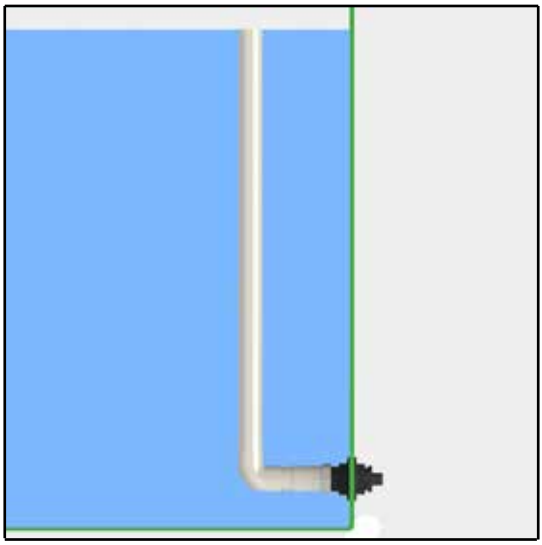

25mm Restricted Height outlet - RO25

All pipe fittings larger than 25mm must be supported independently to minimise stress on base. Please use only appropriate PVC or polyethylene fittings and make sure that all joints are flexibale and are well sealed and watertight with no light penetration.

Where a bottom outlet fitting of over 50mm is required it is strongly recommended that the tank be upgraded to heavy duty or extra heavy duty to accommodate the high-use nature of the application. If a larger fitting is installed in a standard tank it will void the warranty.

Any aftermarket fittings installed in the tank wall or base will void warranty.

KDC - Approved Building Consent Document - BC210441 - Pg 396 of 512 - 30/08/2021 - ComplyNZ

KDC - Approved Building Consent Document - BC210441 - Pg 397 of 512 - 30/08/2021 - ComplyNZ

TOP PLUMBING

Connecting to the dome

There are specially designed mounting areas on the dome of the tank, for inlet and overflow plumbing. We recommend the use of Universal seals® with all top plumbing and care should be taken when drilling the corresponding hole size. Proper hole saws must be used.

Universal seals® are available from Devan (25mm to 100mm).
The overflow should be piped away from the foundation to avoid erosion.

Overflows

An overflow must be installed in all instances to let excess water out of the tank. This is also important if the tank is filled from a float valve in case it sticks open.

A 'Hockey stick' shaped overflow will not provide sufficient out flow in instances of heavy rain and failure to allow could lead to the tank dome eventually vacuuming in.

Ninety degree overflow and vent pipe work is essential.



Rainwater Tank - example

KDC - Approved Building Consent Document - BC210441 - Pg 398 of 512 - 30/08/2021 - ComplyNZ

TOP PLUMBING - CONTINUED

Venting

It is essential that you have more than adequate overflow and air venting for your operating conditions. Air and water must be able to exit the tank at the combined maximum rate that it can enter. If the tank is not sufficiently vented it will inevitably suck in the dome of the tank which will cause the tank to fail prematurely.

For high flow situations such as a wash down tank at a cowshed an appropriate size vent must be installed in the dome.

Venting options are available from Devan.



100mm Overflow vent kit- TAKOV100

KDC - Approved Building Consent Document - BC210441 - Pg 399 of 512 - 30/08/2021 - ComplyNZ

WATER PUMP INSTALLATION

Do not directly install water pumps to the side of your water tank. The water pump and its motor must be self-supported on its own mount and connected to the tank via flexible hose to isolate any vibration or movement by the pumping unit itself. The tank outlet areas and their fittings must not be stressed by the weight of the water pump, motor or plumbing.

Remember to allow more than adequate overflow and venting when water pumps are used. Air and water must be able to enter or escape the tank at the same rate the water is being pumped in or out. Use the top plumbing areas when attaching overflow or vent plumbing to your water tank.

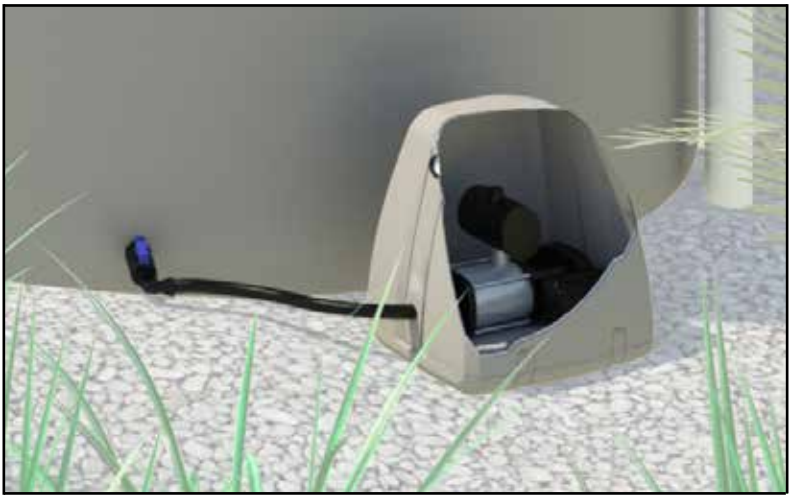

25mm Plumbing kit with Pump and Cover

KDC - Approved Building Consent Document - BC210441 - Pg 400 of 512 - 30/08/2021 - ComplyNZ

WARRANTY POLICY

Your Devan product has been manufactured to the highest standards utilising advanced technology and production procedures. Devan Plastics Limited ("Devan") offers a warranty to the original purchaser that their products to be free of defects in workmanship or materials for the period defined in Appendix A, provided the provisions detailed below have been complied with.

A third party manufacturers' warranty applies to all other components used in the manufacture of Devan products. Third party manufacturer's warrant their products are free from defects in material and workmanship at the time of shipment and will make good, by repair or at its option replacement, any defects which occur during the warrantable period as defined in Appendix A provided the provisions below have been complied with.

Necessary provisions

In order for a warranty claim to be accepted by Devan or a third party manufacturer the following provisions must be met:

1) The equipment was correctly installed and in proper use as was intended by the manufacturer in accordance with the Installation and operating instructions supplied, and generally accepted code of practice or national standard/s.

2) The warranty period (as defined in Appendix A) from the date of invoice to the end user has not lapsed.

3) The claim for goods under warranty arises solely from faulty material or manufacturers' workmanship.

4) The customer or agent of the customer must return goods under warranty (where appropriate), stating the date and place of purchase promptly and within the product warranty period.

5) No repairs must be entered into by anybody other than a specified distributor or repairer as agreed and appointed by Devan.

6) Devan must be given a reasonable opportunity to inspect the tank and, if deemed necessary by Devan to have an independent engineering or other expert analysis of the cause of failure carried out.

Exclusions

Both the Devan warranty and third party manufacturer's warranty do not cover the following exclusions:

WARRANTY - CONTINUED

1) Except where otherwise stated by law, the manufacturer shall not be under liability for any injury, damage, or loss, including consequential damage or loss resulting from the use of its products, or resulting from defects therein. This may specifically refer to the cost of but not limited to lifting, installation, electrical or plumbing requirements.

2) Damage caused by abnormal operating conditions, war, violence, cataclysm, or any force majeure.

3) Damage caused by the equipment being used for an application for which it is not manufactured or recommended by the original manufacturer or Devan.

4) Damage caused by sand or abrasive materials, corrosion due to salt water, hazardous liquids, electrolytic action, and liquid temperatures beyond the recommended range, cavitation, and improper power supply voltage or outages.

5) Attempted repair, dismantling or any other tampering with any component of the system without the prior written approval of Devan will void any warranty.

6) If the Devan product or third party component has not been maintained in accordance with Devan.

7) Ingress of water or insect infestation to electrical components due to post-manufacture electrical penetrations not being appropriately protected.

8) Incorrect installation or negligent practices of the installer of the product.

9) Tank colour that may change or fade over time.

10) Any transport, insurance and freight costs.

This warranty does not exclude any condition or warranty implied by the Consumer Guarantees Act 1993, Fair Trading Act 1986, and the Commerce Act 1986 and is in addition to any rights the purchaser may have at law.

KDC - Approved Building Consent Document - BC210441 - Pg 401 of 512 - 30/08/2021 - ComplyNZ

Appendix A - Product warranty periods

Product	Warranty Period
Water tanks (residential)	20 years
Water tanks (commercial)	10 years
Water tanks (custom made outlets - > 100mm)	1 year
Molasses tanks	10 years
Septic tanks	15 years
WWTS vessels	15 years
Grease traps	10 years
Flout tank	10 years
Detention/retention tanks	15 years
Drums	1 year
Refuse bins	1 year
Industrial bins	1 year
Third party components (WWTS)	1 year
Third party components (other)	1 year
Grundfos pumps	2 years

KDC - Approved Building Consent Document - BC210441 - Pg 402 of 512 - 30/08/2021 - ComplyNZ

KDC - Approved Building Consent Document - BC210441 - Pg 403 of 512 - 30/08/2021 - ComplyNZ

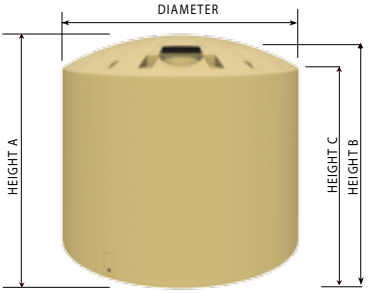

TT30 - 30,000 Litres

DIAMETER: 3.7 metres
HEIGHT A: 3.1 metres
HEIGHT B: 2.9 metres
HEIGHT C: 2.7 metres
WEIGHT: 475 kg
MANWAY: 435mm
OUTLETS: 2 x 50mm
THREAD: Brass BSP

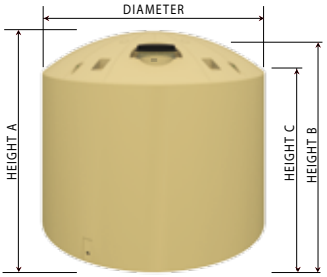

TT25 - 25,000 Litres

DIAMETER: 3.5 metres
HEIGHT A: 3.0 metres
HEIGHT B: 2.8 metres
HEIGHT C: 2.5 metres
WEIGHT: 375 kg
MANWAY: 435mm
OUTLETS: 2 x 50mm
THREAD: Brass BSP

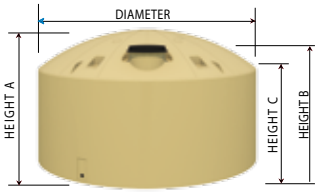

TT15 - 15,000 Litres - NORTH ISLAND

DIAMETER: 3.5 metres
HEIGHT A: 2.0 metres
HEIGHT B: 1.8 metres
HEIGHT C: 1.6 meters
WEIGHT: 250kg
MANWAY: 435mm
OUTLETS: 2 x 50mm
THREAD: Brass BSP

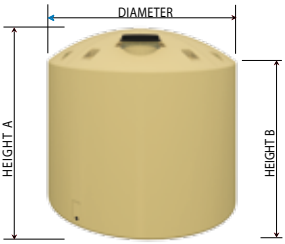

TT15 - 15,000 Litres - SOUTH ISLAND

DIAMETER: 2.9 metres
HEIGHT A: 2.6 metres
HEIGHT B: 2.2 metres
WEIGHT: 275 kg
MANWAY: 435mm
OUTLETS: 2 x 50mm
THREAD: Brass BSP

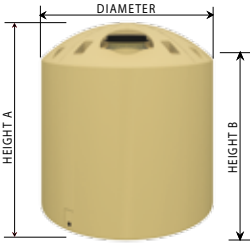

TT10 - 10,000 Litres - NORTH ISLAND

DIAMETER: 2.5 metres
HEIGHT A: 2.6 metres
HEIGHT B: 2.2 metres
WEIGHT: 225 kg
MANWAY: 435mm
OUTLETS: 2 x 50mm
THREAD: Brass BSP

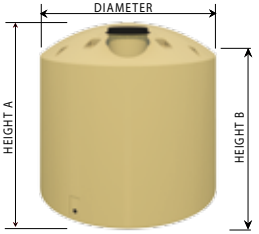

TT10 - 10,000 Litres - SOUTH ISLAND

DIAMETER: 2.6 metres
HEIGHT A: 2.4 metres
HEIGHT B: 2.1 metres
WEIGHT: 225 kg
MANWAY: 435mm
OUTLETS: 2 x 50mm
THREAD: Brass BSP

KDC - Approved Building Consent Document - BC210441 - Pg 404 of 512 - 30/08/2021 - ComplyNZ

WATER TANK DIMENSIONS - CONTINUED

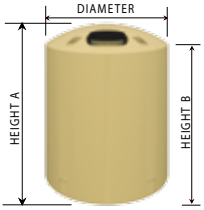

TT05 - 5,500 Litres - NORTH ISLAND

DIAMETER: 1.9 metres
HEIGHT A: 2.3 metres
HEIGHT B: 2.0 metres
WEIGHT: 112.5 kg
MANWAY: 435mm
OUTLETS: 1 x 50mm
THREAD: Brass BSP

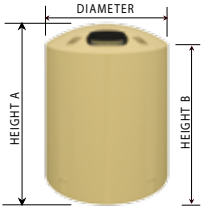

TT05 - 5,000 Litres - SOUTH ISLAND

DIAMETER: 1.9 metres
HEIGHT A: 1.9 metres
HEIGHT B: 1.8 metres
WEIGHT: 100 kg
MANWAY: 435mm
OUTLETS: 1 x 50mm
THREAD: Brass BSP

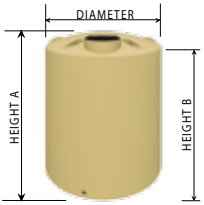

TT04 - 4,000 Litres

DIAMETER: 1.7 metres
HEIGHT A: 1.9 metres
HEIGHT B: 1.8 metres
WEIGHT: 75 kg
MANWAY: 383mm
OUTLETS: 1 x 50mm
THREAD: Brass BSP

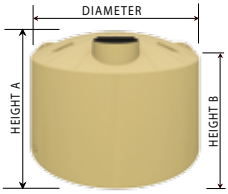

TT03 - 3,500 Litres

DIAMETER: 2.0 metres
HEIGHT A: 1.3 metres
HEIGHT B: 1.1 metres
WEIGHT: 75 kg
MANWAY: 383mm
OUTLETS: 1 x 50mm
THREAD: Brass BSP

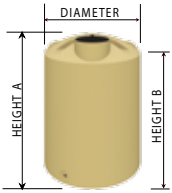

TT02 - 2,000 Litres

DIAMETER: 1.4 metres
HEIGHT A: 1.8 metres
HEIGHT B: 1.6 metres
WEIGHT: 50 kg
MANWAY: 383mm
OUTLETS: 1 x 50mm
THREAD: Brass BSP

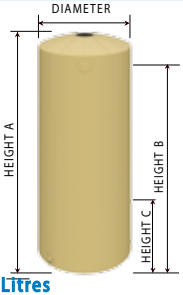

TT01 - 1,000 Litres

DIAMETER: 0.87 metres
HEIGHT A: 2.0 metres
HEIGHT B: 1.8 metres
HEIGHT C: 0.4 metres
WEIGHT: 35 kg
MANWAY: 150mm
OUTLETS: 2x50mm & 2x16mm
THREAD: Brass BSP

KDC - Approved Building Consent Document - BC210441 - Pg 405 of 512 - 30/08/2021 - ComplyNZ

WATER TANK DIMENSIONS - CONTINUED

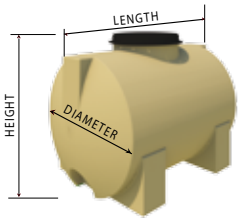

TT007 - 750 Litres

LENGTH: 1.3 metres
HEIGHT: 1.0 metres
DIAMETER: 0.9 metres
WEIGHT: 30 kg
MANWAY: 435mm

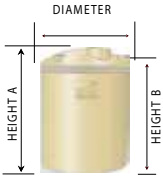

TT006 - 600 Litres

DIAMETER: 0.86 metres
HEIGHT A: 1.2 metres
HEIGHT B: 1.1 metres
WEIGHT: 20 kg
MANWAY: 190mm
OUTLET: 1 x 50mm
THREAD: Brass BSP



CLEANING AND MAINTENANCE

Depending on the cleanliness of your water source, your water tank should be cleaned on a regular basis.

What can end up in my water?

Algae growth is a common occurrence in water tanks. Devan water tanks are manufactured to strict quality tolerances, meaning that no light can penetrate the tank which will eliminate any algae growth, as algae need light to exist. Sometimes the nature of an installation can change this whereby an installer may cut oversized holes for inlets or overflows/venting. Blocking up any points for light to enter the tank will reduce or eliminate algae growth in the tank.

External debris are a much more visible source of contamination that will either float on the top of the water, of form sediment on the bottom of the tank. Such contaminants will consist of leaf litter, bird droppings, dead insects and even animals. This debris will build up on the bottom of your tank and require removal periodically.

Cleaning frequency

Devan recommend that you clean your tank out at least annually; however it is important to inspect your water tank on a quarterly basis to assess the level of contamination. A quality installation with the right pretreatment accessories could mean your tank remains in immaculate condition for a number of years before requiring cleaning. Cleaning of your tank will either take a bunch of your time or money and so the less frequently you need to clean it, the better. If you are noticing the rapid build up of sediment on the bottom of your tank, investigate the options for pre-treatment.

Devan tanks have outlet locations positioned up off the bottom of the tank which means you are not drawing off the contaminated water at the bottom of the tank for your day to day consumption. This is a precautionary measure only and should not be relied upon to prevent organic material entering your water supply.

Tank cleaning options

Professional contractors

The Yellow Pages and other online sources will provide the details of people providing 'Water Tank Services'.

Depending on your proximity to the nearest service provider, this is not a terribly expensive exercise with reports of $200-$300 plus the cost of a tank of water, which varies dramatically around the country.

KDC - Approved Building Consent Document - BC210441 - Pg 406 of 512 - 30/08/2021 - ComplyNZ

KDC - Approved Building Consent Document - BC210441 - Pg 407 of 512 - 30/08/2021 - ComplyNZ

CLEANING AND MAINTENANCE - CONTINUED

Although a self clean (described below) is a relatively straight forward exercise, it can be very time consuming, while a contractor will have it done in a couple of hours.

Do it yourself

Warning: If you will be getting into the tank to clean it, make sure there is adequate ventilation, and you have another person present at all times in case something should go wrong. Working in confined spaces is dangerous and should not be attempted by an individual working alone.

Draining the tank down to the last 1-2 thousand litres through the spare outlet will concentrate all contaminants into the bottom of the tank. The quickest and easiest way to then remove the concentrated contaminants is to hire a wet vacuum system or pump and stir up all the debris with a soft broom, which will then be sucked out by the vacuum or pump.

Siphoning off sediments may also be done using an inverted funnel (described below) or pool vacuum cleaner, by dragging it along the bottom of the tank.



1) Start with a piece of flexible plastic tubing long enough to reach into your tank. Then fix an ordinary kitchen funnel to one end.



2) Fill the tube with water from a garden hose, making sure there are no air spaces present and the funnel is partially filled.



3) Block up the open end with a watertight seal and hold the funnel end vertical so the water stays contained in the tube.



4) If you are unable to enter the tank, attach the funnel to a long pole that you can manoeuvre through the tank opening.



5) When ready, plunge the funnel end into the tank water, then position the outside end in bucket and remove the stopper.



6) Water should begin to flow out the tank into the bucket, and you can now suck up any accumulated debris on the tank floor.

Devan would like to credit Gisborne District Council for some written content and the pictorial siphon instructions, and the Ministry of Health for some written content.

Attach stamp

Devan Plastics Limited
PO Box 2602
Tauranga 3140

FOLD

KDC - Approved Building Consent Document - BC210441 - Pg 408 of 512 - 30/08/2021 - ComplyNZ

KDC - Approved Building Consent Document - BC210441 - Pg 409 of 512 - 30/08/2021 - ComplyNZ

WARRANTY REGISTRATION

Thank you for purchasing your tank from Devan, please take the time to fill out the warranty registration form. You can complete this online under 'warranty registration' or complete the form below and post it in.

Name .....

Address .....

.....

.....

.....

Phone .....

Email .....

Product Purchased .....

Serial or Sales Number .....

Installer (if used) .....

Description of tank use (stock water, home supply, molasses etc)

.....

.....

Check List

- ☐ Base outlets flexibly plumbed
- ☐ Overflow installed (larger than inflow)
- ☐ Base fill clean and level
- ☐ Tank vented correctly
- ☐ Depth of burial not exceeded

CUT

7701 Electrical Basic

Real Flame Owner's Manual

Ref 27744. Uploaded 22 Jun 2021

Purpose: Installation, Maintenance

KDC - Approved Building Consent Document - BC210441 - Pg 410 of 512 - 30/08/2021 - ComplyNZ

KDC - Approved Building Consent Document - BC210441 - Pg 411 of 512 - 30/08/2021 - ComplyNZ

REAL FLAME

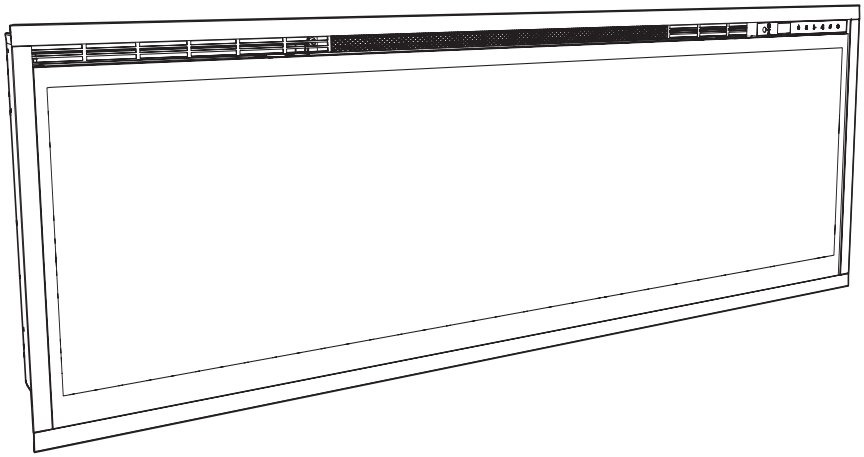

Owner's Manual

Model's
Ignite 50" / RF XLF50
Ignite 74" / RF XLF74
Ignite 100" / RF XLF100

EN

CE The product complies with the European Safety Standards EN60335-2-30 and the European Standard Electromagnetic Compatibility (EMC) EN55014, EN60555-2 and EN60555-3. These cover the essential requirements of EEC Directives 2006/95/EC and 2004/108/EC

08/53411/0 Version 6

Table of Contents

Welcome & Congratulations 3
IMPORTANT INSTRUCTIONS 4
Quick Reference Guide 6
Fireplace Installation 7
Operation 11
Maintenance 15

KDC - Approved Building Consent Document - BC210441 - Pg 412 of 512 - 30/08/2021 - ComplyNZ

Always use a qualified technician or service agency to repair this fireplace.

! **NOTE:** Procedures and techniques that are considered important enough to emphasize.

CAUTION: Procedures and techniques which, if not carefully followed, will result in damage to the equipment.

WARNING: Procedures and techniques which, if not carefully followed, will expose the user to the risk of fire, serious injury, or death.

Welcome & Congratulations

Thank you and congratulations for purchasing an electric fireplace from Real Flame. Please take note of the location of the Model & Serial for this product it is important to be able to locate it in the event of requiring technical support.

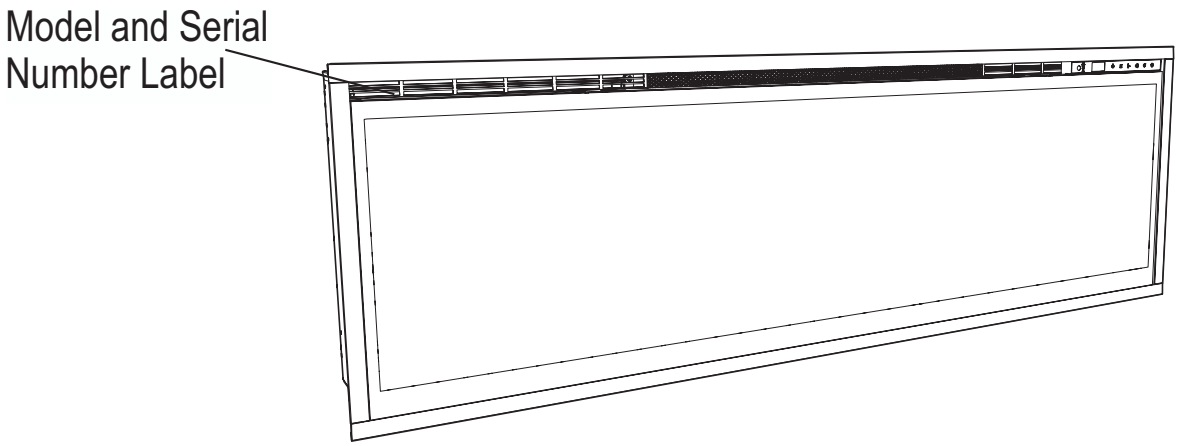

Please carefully read and save these instructions.

CAUTION: Read all instructions and warnings carefully before starting installation. Failure to follow these instructions may result in a possible electric shock, fire hazard and will void the warranty.

KDC - Approved Building Consent Document - BC210441 - Pg 413 of 512 - 30/08/2021 - ComplyNZ

⚠ IMPORTANT INSTRUCTIONS

KDC - Approved Building Consent Document - BC210441 - Pg 414 of 512 - 30/08/2021 - ComplyNZ

Important Safety Advice

When using electrical appliances, basic precautions should be followed to reduce the risk of fire, electric shock, and injury to persons, including the following:

If the appliance is damaged, check immediately with the supplier before installation and operation.

Do not use this appliance in the immediate surroundings of a bath, shower or swimming pool.

Do not use outdoors.

This appliance must not be located immediately above or below a fixed socket outlet or connection box.

WARNING : The appliance carries the Warning Symbol indicating that it must not be covered or has a Do not cover label. Do not cover or obstruct in any way the heat outlet grille located at the top of the appliance overheating will result if the appliance is accidentally covered. Do not place material or garments on the appliance, or obstruct the air circulation around the appliance, for instance by curtains or furniture, as this could cause overheating and a fire risk.

In the event of a fault unplug the heater.Unplug the appliance when not required for long periods.The supply cord must be placed on the right hand side of the heater away from the heat outlet underneath the appliance.

Although this appliance complies with safety standards, we do not recommend its use on deep pile carpets or on long hair type of rugs.

This appliance can be used by children aged from 8 years and above and persons with reduced physical, sensory or mental capabilities or lack of experinence and knowledge if they have been given supervision or instruction concerning use of the appliance in a safe way and understand the hazards involved. Children shall not play with the appliance. Cleaning and user maintaince shall not be made by children

⚠ IMPORTANT INSTRUCTIONS

KDC - Approved Building Consent Document - BC210441 - Pg 415 of 512 - 30/08/2021 - ComplyNZ

without supervision.

Children of less than 3 years should be kept away unless continuously supervised. Children aged from 3 years and less than 8 years shall only switch on/off the appliance provided that it has been placed or installed in its intended normal operating position and they have been given supervision or instruction concerning use of the appliance in a safe way and understanding the hazards involved. Children aged from 3 years and less than 8 years shall not plug in, regulate and clean the appliance or perform user maintaince.

The appliance must be positioned so that the plug is accessible.

If the supply cord is damaged it must be replaced by the manufacturer or service agent or similarly qualified person in order to avoid a hazard.

CAUTION: In order to avoid a hazard due to inadvertent resetting of the thermal cut-out, this appliance must not be supplied through an external switching device, such as a timer, or connected to a circuit that is regularly switched on and off by the utility.

CAUTION - Some parts of this product can become very hot and cause burns. Particular attention has to be given where children and vulnerable people are present.

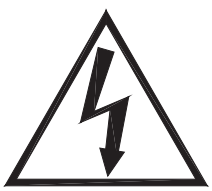

CAUTION
RISK OF ELECTRIC SHOCK
DO NOT OPEN
NO USER-SERVICABLE PARTS INSIDE



SAVE THESE INSTRUCTIONS

Quick Reference Guide

1. The electrical information regarding your electric fireplace can be found on the rating label located on the top of the unit.

2. If you have any technical questions or concerns regarding the operation of your electric fireplace, or require service contact the relavent customer service as listed on your warrenty card.

3. For dimensions of your fireplace, refer to Figure 1.

Figure 1

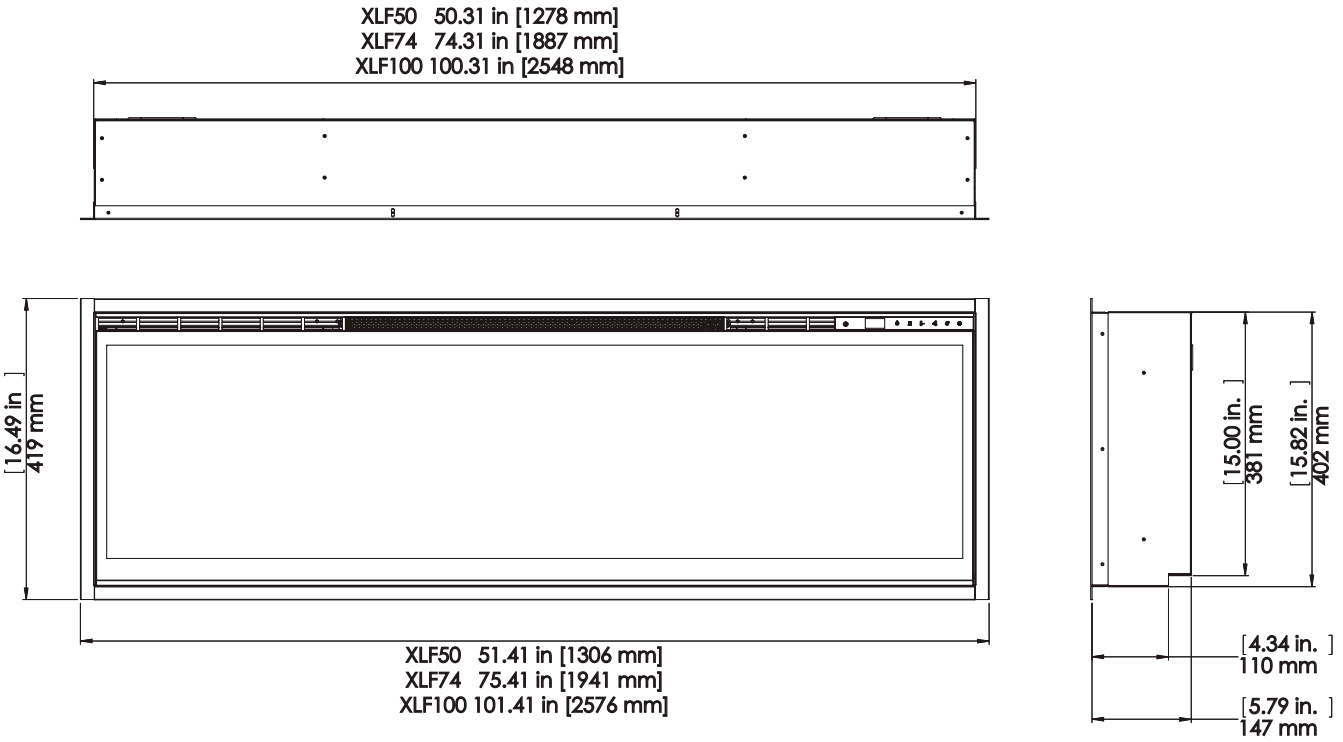

KDC - Approved Building Consent Document - BC210441 - Pg 416 of 512 - 30/08/2021 - ComplyNZ

Framing Detail

KDC - Approved Building Consent Document - BC210441 - Pg 417 of 512 - 30/08/2021 - ComplyNZ

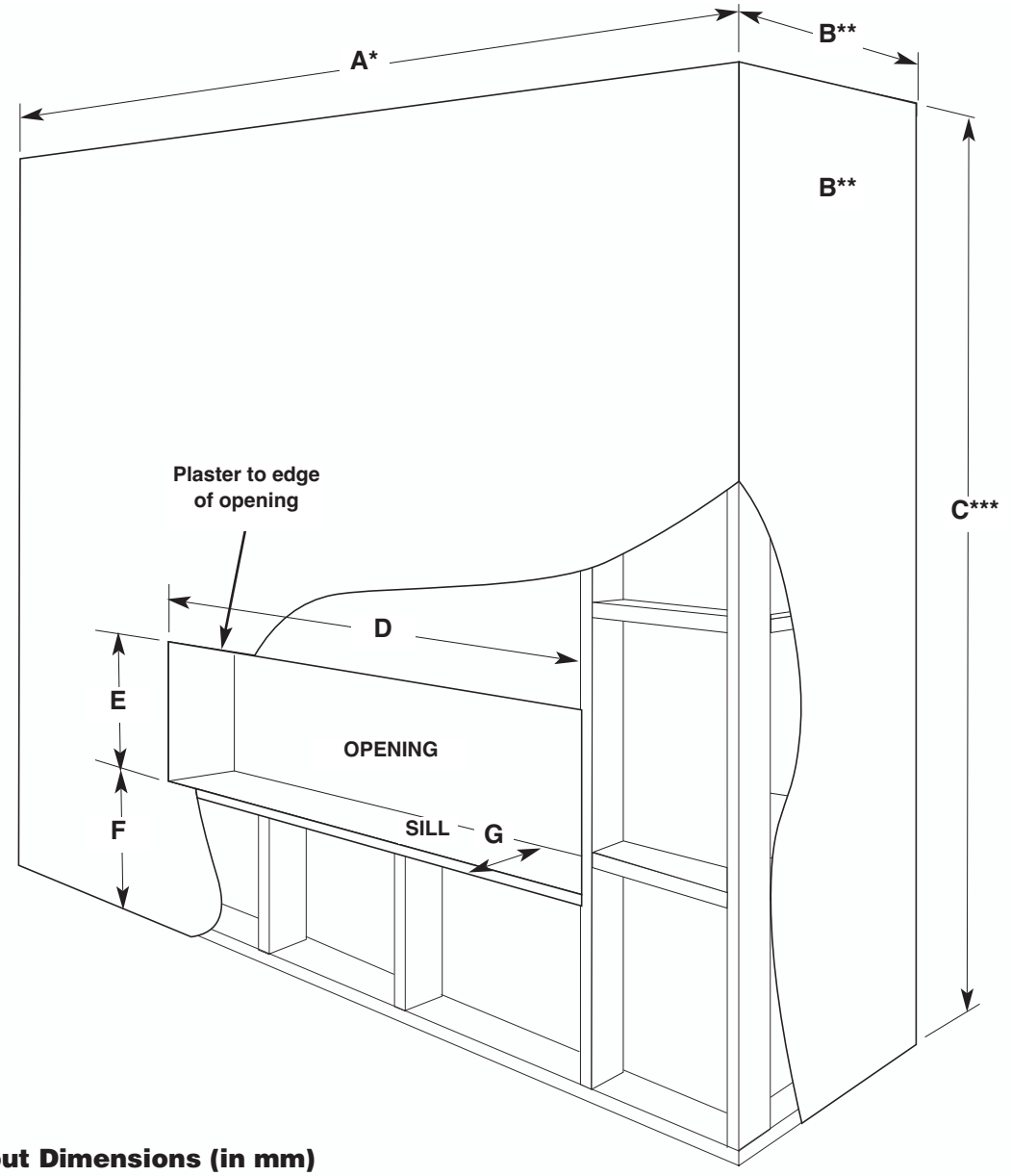

Frameout Dimensions (in mm)

MODEL	A	B	C	D	E	F	G
XLF50	1420	160	1500	1287	406	900	102
XLF74	2050	160	1500	1897	406	900	102
XLF100	2690	160	1500	2557	406	900	102

A * Minimum

B ** Minimum

C *** Minimum

Refer to notes on pages 8 to 11.

Fireplace Installation

KDC - Approved Building Consent Document - BC210441 - Pg 418 of 512 - 30/08/2021 - ComplyNZ

CAUTION: Ensure installation does not allow fireplace to be in direct contact with building vapor barrier or insulation and meets all local building code.

NOTE: A 10 Amp, 230 – 240 Volt circuit is required. A dedicated circuit is preferred but not essential in all cases. A dedicated circuit will be required if, after installation, the circuit breaker trips or fuse blows on a regular basis when the heater is operating.

WARNING: Construction and wiring must comply with local building codes and other applicable regulations to reduce the risk of fire, electric shock and injury to persons.

WARNING: To reduce the risk of fire, electric shock or injury to persons, always use a licensed electrician.

WARNING: To reduce the risk of fire, do not store or use gasoline or other flammable vapors or liquids in the vicinity of the heater.

1. Select a location that is not susceptible to moisture and is away from drapes, furniture and high traffic.
2. Unpack the fireplace and hardware from the box.

NOTE: Leave the front glass and partially reflective glass, safely, in the box until the time you are ready to install it.

3. Store the fireplace in a safe, dry and dust free location until you are ready to install the fireplace.

Installation

CAUTION: Two people will be required for various steps of this procedure.

This design of this unit allows three options for installation: **partial recess**, **flush mounted** or **sub-surface** mounted.

CAUTION: **Sub-surface** mounting should be limited to ½ in. (12 mm) to ensure adequate air flow of heated air out of the firebox area.

1. Prepare a wall with a framed opening of 16 in. (40.6 cm) high,
   - XLF50 - 50 ⅝ in. (128.7 cm)
   - XLF74 - 74 ⅝ in. (189.7 cm)
   - XLF100 - 100 ⅝ in. (255.7 cm) wide, with a bottom sill that is a ***minimum*** of 4 in. (10.2 cm) deep. The sill can be constructed to support the front of the unit to allow the power supply wires to easily be run behind or flush with the back of the unit and a pass thru

Fireplace Installation

KDC - Approved Building Consent Document - BC210441 - Pg 419 of 512 - 30/08/2021 - ComplyNZ

hole drilled for electrical wire routing.

! NOTE: It is recommended that the bottom of the unit be mounted between 30 in. (76.2 cm) and 40 in. (102 cm) from the ground to maintain an optimized viewing angle of the flame.

⚠ WARNING: Do not attempt to wire your own new circuits. To reduce the risk of fire, electric shock or injury to persons, always use a licensed electrician.

⚠ WARNING: Ensure that the circuit on which the fireplace is to be installed has the power cut off at the service panel until installation is complete.

2. The unit is provided with an installed ¾ in. (2.0 cm) trim. Depending on the installation, this trim can be removed by removing the securing screws and the 4 trim pieces.
3. Lift fireplace, from the bottom and the handles located on the back, and insert into opening to the desired depth.
4. Using a bubble level (supplied) ensure that the fireplace is level within the framing. Adjust as required.
5. Drive four supplied mounting screws through the four mounting holes located on the inside surface of the fireplace chassis, into wall studs (Figure 2).

For Bathroom Use

If this unit is installed in a bathroom it must be protected by a GFI receptacle or circuit. If receptacle is used it must be readily accessible.

Figure 2

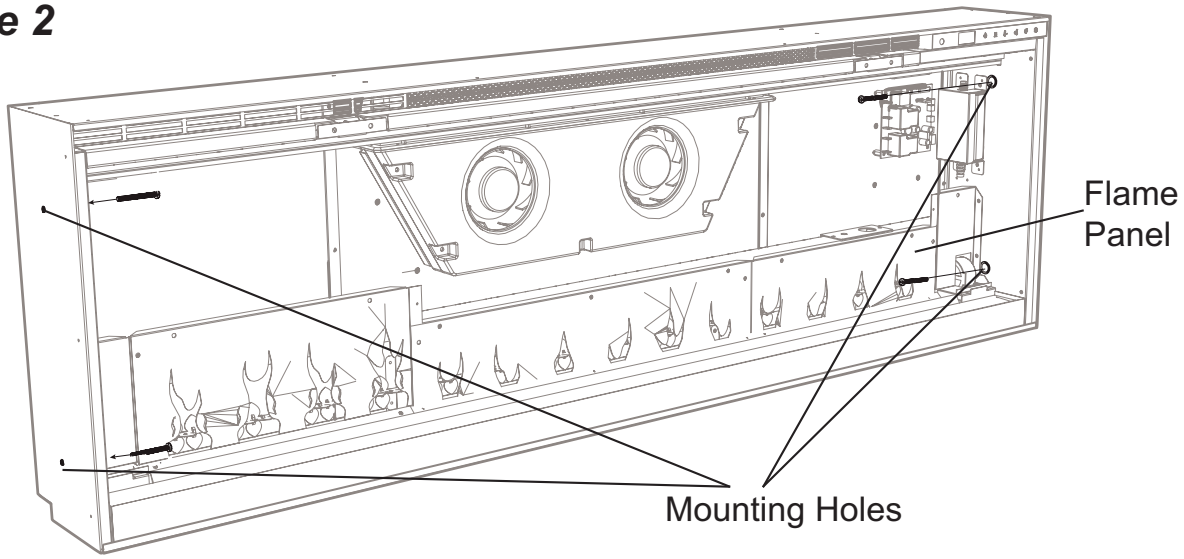

Fireplace Installation

KDC - Approved Building Consent Document - BC210441 - Pg 420 of 512 - 30/08/2021 - ComplyNZ

Figure 3

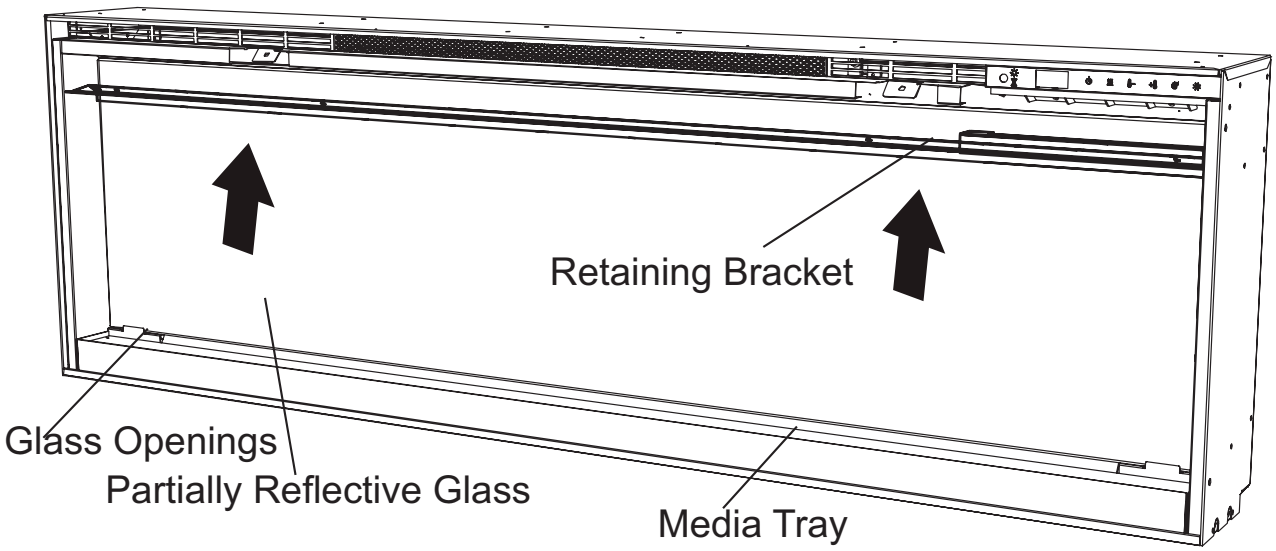

To prevent electrical shock this unit is an electrical appliance that is ***NOT*** watertight and must be installed as to prevent water from entering unit. This must be installed away from showers, tubs, etc. Never locate fireplace where it may fall into a bathtub or other water container.

Final Assembly

1. Locate and remove the 12 screws securing the partially reflective glass bracket to the unit, along the top of the opening, and set bracket and screws aside.
2. Remove the provided suction cup from the inside cavity of the unit (only for XLF74 and XLF100 units).
3. Before installation ensure that the front glass and the partially reflective glass are clean. Particles can be removed by dusting lightly with a clean dry cloth. To remove fingerprints or other marks, the glass can be cleaned with a damp cloth. Ensure that the glass has completely dried before installation.
4. Carefully secure the suction cup to the partially reflective glass, reflective side out, and place into the openings on either side of the unit.
5. Tip the glass into the unit and using the removed screws secure the glass into the unit with the provided bracket (Figure 3). Remove the suction cup.

Fireplace Installation

KDC - Approved Building Consent Document - BC210441 - Pg 421 of 512 - 30/08/2021 - ComplyNZ

6. Evenly space the large media in the media tray along the back of the media tray (for optimum media effect), then carefully pour and evenly distribute the smaller media into the Media Tray.
7. Carefully place the front glass into the lip located at the bottom of the opening of the firebox.
8. Tip the front glass into the unit and secure using the provided screws and Allen key. (Figure 4).

! **NOTE:** Ensure that the suction cup and Allen key are kept for any future maintenance or service.

Figure 4

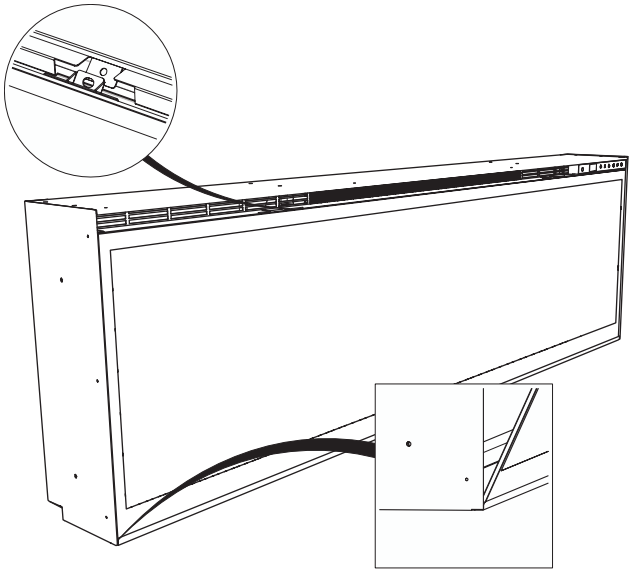

Operation

KDC - Approved Building Consent Document - BC210441 - Pg 422 of 512 - 30/08/2021 - ComplyNZ

General Operation

WARNING: This electric firebox must be properly installed before it is used.

This firebox operates with Comfort$aver™ technology, which automatically adjusts the fan speed and heater wattage to safely and precisely match the requirements of the room based on the thermostat setting. The heater operates such that once the room reaches the set point, the fan and heater will continuously run at a low level, to maintain the desired room temperature. If the temperature in the room rises significantly, i.e. sun coming through a window or a central furnace turns on, the heater will turn off and periodically turn back on to circulate the air around the unit, until the room temperature drops and requires the heater to be constantly on again.

! NOTE: The unit is designed so that the fan will run continuously while the heater is on.

! NOTE: The element retains heat after shutdown, there is a built in cool down period of 2 minute before the fan shuts off completely, when the heat function is turned Off.

Remote Operation

The fireplace is supplied with an IR multi-function remote control.

! NOTE: To operate correctly, the remote control must be pointed towards the front of the unit.

Controls

The unit can be controlled by either the manual controls which are located on the upper right of the fireplace or the remote (Figure 5 & 6).

A. Standby

Turns the unit On and Off.

→ Activated by pressing the Standby button on the remote or the unit.

- The unit will turn On with the same functions that it was set to when it was turned Off and the intake temperature will be indicated on the Display.

! NOTE: When any button is pressed on the unit the intake temperature will be displayed on the Display for 7 seconds.

B. Flame Effects

Turns the Flame Effect On and Off.

→ Activated by pressing the button on the remote.

Operation

Figure 7

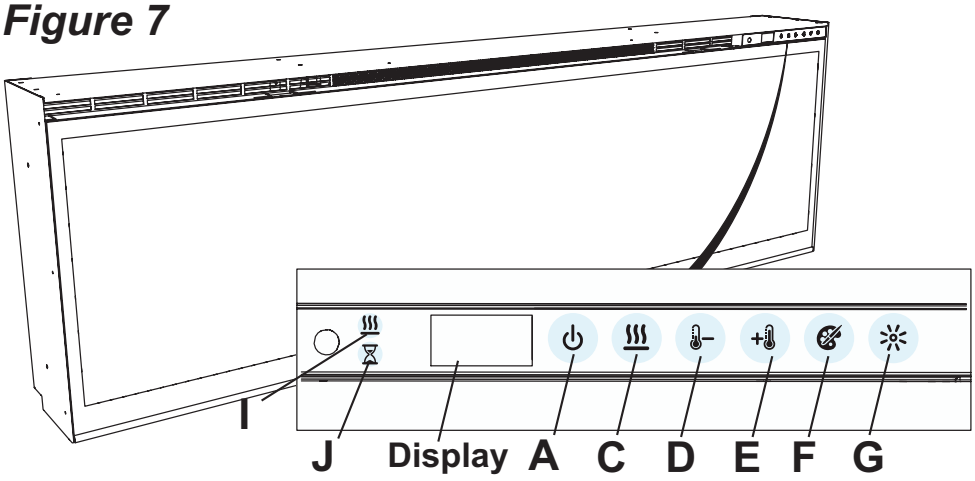

Figure 8

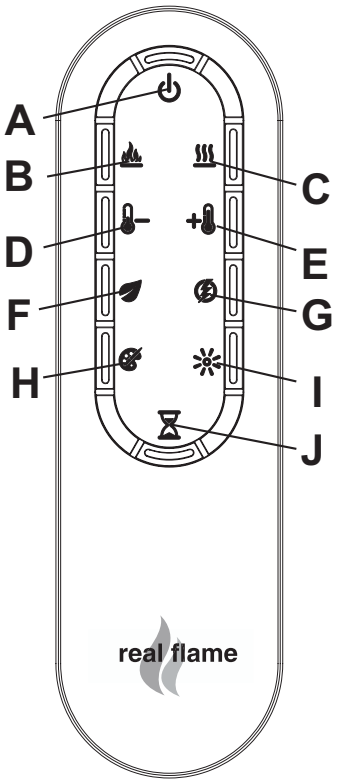

C. Heat ON/OFF

Turns the heater On and Off.

→ Activated by pressing the button on the remote or the unit.

- Indicated by the icon and the setpoint temperature will flash on the display, then the intake temperature will be displayed before turning off.

! NOTE: After the heater is switched off, there is a 2 minute fan delay, where the fan will continue running before turning off.

! NOTE: The unit can be operated in ***Heat Only Mode***. When the unit is only running with the heater, the icon will continuously be displayed on the Display.

! NOTE: The heater may emit a slight, harmless odor when first used. This odor is a normal condition caused by initial heating of internal heater parts and will not occur again.

D Temperature Down

Decreases the temperature setting.

→ Adjusted by repeatedly pressing the corresponding button on the remote.*

- Indicated by setpoint temperature on the Display decreasing and the speed of the fan decreasing to reduce the amount of heat being projected into the room.**

E. Temperature Up

Increases the temperature setting.

KDC - Approved Building Consent Document - BC210441 - Pg 423 of 512 - 30/08/2021 - ComplyNZ

KDC - Approved Building Consent Document - BC210441 - Pg 424 of 512 - 30/08/2021 - ComplyNZ

Operation

→ Adjusted by repeatedly pressing the corresponding button on the remote.*

- Indicated by the setpoint on the Display increasing and the speed of the fan increasing to increase the amount of heat being projected into the room.

* The first time the button is pressed the current temperature set point will be displayed for 2 seconds.

** The temperature can be adjusted from 5 °C to 37 °C (41 °F to 99 °F).

! **NOTE:** Holding the + and the − buttons down for two seconds, on the unit, will change the temperature scale from °C to °F, or vice versa.

F. Eco Operation

Runs the heater in a reduced wattage range when activated.

→ Adjusted by pressing the corresponding button on the remote when the heater is on.

- Indicated by the Display and a reduced fan speed.

G. Heat Boost

Turns the Heater Boost On and Off. Runs the unit at the full rated wattage.

→ Activated and adjusted by repeatedly pressing the corresponding button on the remote.

- Indicated by the heater running at full heat, for a user set amount of time, to quickly heat up a cold room/space. The Heat Boost can be set for a maximum of 20 minutes, in 5 minute increments.

Disable Heat

If desired, depending on the season, the heater on the unit can be disabled. The function of the remaining controls will continue to function as outlined in this manual.

Pressing the and − buttons on the unit at the same time and holding for 2 seconds will disable and enable the heater.

! **NOTE:** When the heater has been disabled and any of the heat related functions are used, the Display will indicate "---".

F. Color Themes

Different presets of lighting color combinations are available in the unit.

→ Changed by repeatedly pressing the corresponding button on the remote or the unit.

Operation

KDC - Approved Building Consent Document - BC210441 - Pg 425 of 512 - 30/08/2021 - ComplyNZ

- Cycles through the different preset light settings of the unit, this includes different combinations of colors of the flame base and media lighting.

! NOTE: Two of the themes in the cycle are a prism where the unit cycles through a variety of colors. Pressing the ✲ stops the cycling and holds the unit on the preferred color, indicated by a solid circle. When the unit is on prism, and is cycling through the colors, a rotating circle will be displayed.

G. ✲ Brightness

Changes the Brightness of the lights in the unit.

→ Adjusted by repeatedly pressing the corresponding button on the remote or the unit.

- Indicated by the second digit on the Display changing to show: "H" (high), and "L" (low).

H. ⧗ Sleep Timer

The Sleep Timer can be set to automatically shut off the fireplace after a preset time (from 30 minutes to 8 hours).

→ To set the timer press the timer button on the remote, repeatedly, until the desired time is displayed.

- The Display will display the different times as it is adjusted.

Once the timer has begun, pressing the ⧗ button will display the time remaining before the unit turns Off.

! NOTE: The Sleep Timer can be cancelled at any time by pressing the ⧗ button repeatedly until the sleep timer displays nothing.

Resetting the Temperature Cutoff Switch

Should the heater overheat, an automatic cut out will turn the whole unit off and it will not come back on without being reset. If the ⏻ button on the unit is pressed, Er2 will be displayed on the unit. It can be reset by turning the unit off at the main disconnect panel and waiting 5 minutes before turning the unit back on.

⚠ CAUTION: If you need to continuously reset the heater, turn the unit off at the main disconnect panel and call technical support.

KDC - Approved Building Consent Document - BC210441 - Pg 426 of 512 - 30/08/2021 - ComplyNZ

Operation

Maintenance

Remote Control Battery Replacement

To replace the Battery:

1. Slide battery cover open on the remote control.
2. Correctly install one 3 Volt (CR2032 [longer life] or CR2025) Battery in the battery holder.
3. Close the battery cover.

Battery must be recycled or disposed of properly. Check with your Local Authority or Retailer for recycling advice in your area

WARNING: Disconnect power and allow heater to cool before attempting any maintenance or cleaning to reduce the risk of fire, electric shock or damage to persons.

NOTE: The fireplace should not be operated with an accumulation of dust or dirt on or in the unit, as this can cause a build up of heat and eventual damage. For this reason the heater must be inspected regularly, depending upon conditions and at a minimum yearly intervals.

Partially Reflective Glass Cleaning

The partially reflective glass is cleaned in the factory during the assembly operation. During shipment, installation, handling, etc., the partially reflective glass may collect dust particles; these can be removed by dusting lightly with a clean dry cloth.

To remove fingerprints or other marks, the partially reflective glass can be cleaned with a damp cloth. The partially reflective glass should be completely dried with a lint free cloth to prevent water spots. To prevent scratching, do not use abrasive cleaners.

Maintenance

Fireplace Surface Cleaning

Use only a damp cloth to clean painted surfaces of the fireplace. Do not use abrasive cleaners.

Recycling



For electrical products sold within the European Community. At the end of the electrical products useful life it should not be disposed of with household waste. Please recycle where facilities exist. Check with your Local Authority or retailer for recycling advice in your country.

After Sales Service

Your product is guaranteed for one year from the date of purchase.

Within this period, we undertake to repair or exchange this product free of charge (excluding lamps & subject to availability) provided it has been installed and operated in accordance with these instructions.

Your rights under this guarantee are additional to your statutory rights, which in turn are not affected by this guarantee.

Should you require after sales service you should contact our customer services the contact number is located on your warrenty card. It would assist us if you can quote the model number, series, date of purchase, and nature of the fault at the time of your call. The customer services help desk will also be able to advise you should you need to purchase any spares.

Please do not return a faulty product to us in the first instance as this may result in loss or damage and delay in providing you with a satisfactory service.

Please retain your receipt as proof of purchase.

KDC - Approved Building Consent Document - BC210441 - Pg 427 of 512 - 30/08/2021 - ComplyNZ

KDC - Approved Building Consent Document - BC210441 - Pg 428 of 512 - 30/08/2021 - ComplyNZ

KDC - Approved Building Consent Document - BC210441 - Pg 429 of 512 - 30/08/2021 - ComplyNZ

KDC - Approved Building Consent Document - BC210441 - Pg 430 of 512 - 30/08/2021 - ComplyNZ

GLEN DIMPLEX AUSTRALIA PTY LTD
ABN 69 118 275 460

Head Office/Factory/Showroom
1340 Ferntree Gully Rd.
Scoresby Vic 3179
Ph: (03) 8706 2000 Fax: (03) 8706 2001
E-mail: info@realflame.com.au

Richmond - VIC Showroom
300 Swan St.
Richmond Vic 3121
Ph: (03) 9428 4443 Fax: (03) 9428 4445

Dandenong - VIC Showroom
3/328 South Gippsland Highway,
Dandenong South Vic 3164
Ph: (03) 9702 7853
E-mail: sales@realflamedandenong.com.au

Geelong - VIC Showroom
1/2A Gordon Avenue.
Geelong West Vic 3218
Ph/Fax: 5229 0844
E-mail: realflamegeelong@hotmail.com.au

Sydney - NSW Showroom
546 Pacific Highway.
Chatswood NSW 2067
Ph: (02) 8905 0189 Fax: (02) 8905 0192
E-mail: info@realflame.com.au

Miranda - NSW Showroom
36 Kareena Rd
Miranda NSW 2228
Ph: (02) 8513 6202 Fax: (02) 9520 1974
E-mail: fireplace@realflamesouth.com.au

Adelaide - SA Showroom
173 -175 Magill Rd.
Norwood SA 5067
Ph: (08) 8132 0371 Fax: (08) 8132 1687
E-mail: realflamesa@iprimus.com.au

Milton - QLD Showroom
46 Douglas St,
Milton QLD 4064
Ph: (07) 3368 2011

Perth – WA Showroom
47-53 McDonald St East,
Osborne Park WA 6017
Ph: (08) 9444 9900 Fax: (08) 9444 9800

Fyshwick – ACT Showroom
88 Wollongong St,
Fyshwick ACT 2609
Ph: (02) 6280 5522

Ulverstone – TAS Showroom
31A Victoria St,
Ulverstone TAS 7315
Ph: (03) 6425 4440

4161MI Marshall Weatherization System

Marshall Innovations Ltd
+64 07 5430948
headoffice@mwnz.com
www.mwnz.com

SUPPORTING DOCUMENTS

BRANZ Appraisal 548 - Tekton® Building Wrap

Ref 10504. Uploaded 10 Aug 2020

Purpose: Performance

KDC - Approved Building Consent Document - BC210441 - Pg 431 of 512 - 30/08/2021 - ComplyNZ

KDC - Approved Building Consent Document - BC210441 - Pg 432 of 512 - 30/08/2021 - ComplyNZ

BRANZ Appraised

Appraisal No. 548 [2019]

TEKTON® BUILDING WRAP

Appraisal No. 548 (2019)

This Appraisal replaces BRANZ Appraisal No. 548 (2013)

Amended 04 August 2021



BRANZ Appraisals

Technical Assessments of products for building and construction.

Marshall Innovations Limited
PO Box 9411
Greerton
Tauranga
Tel: 07 543 0948
Fax: 07 541 1029
Web: www.mwnz.com

BRANZ
1222 Moonshine Rd,
RD 1, Porirua 5381
Private Bag 50 908
Porirua 5240,
New Zealand
Tel: 04 237 1170
branz.co.nz

Product

1.1 Tekton® Building Wrap is a synthetic breather-type flexible wall underlay and air barrier for use under direct and non-direct fixed wall cladding on timber and steel-framed buildings. The product is manufactured of a coated spun-bonded polypropylene.

Scope

2.1 Tekton® Building Wrap has been appraised for use as a flexible wall underlay on timber-framed buildings within the following scope:

- the scope limitations of NZBC Acceptable Solution E2/AS1, Paragraph 1.1 with regards to building height and floor plan area; and,
- with absorbent wall claddings directly fixed to framing; and,
- with absorbent and non-absorbent wall claddings installed over an 18 mm minimum drained cavity; and,
- with masonry veneer in accordance with NZBC Acceptable Solution E2/AS1; and,
- situated in NZS 3604 Wind Zones up to, and including, Very High.

2.2 Tekton® Building Wrap has been appraised for use as a flexible wall underlay on steel-framed buildings within the following scope:

- the scope limitations of NZBC Acceptable Solution E2/AS1, Paragraph 1.1 with regards to building height and floor plan area; and,
- with absorbent and non-absorbent wall claddings installed over an 18 mm minimum drained cavity; and,
- with masonry veneer subject to specific design; and,
- situated in NZS 3604 Wind Zones up to, and including, Very High.

2.3 Tekton® Building Wrap has been appraised for use as a flexible wall underlay over rigid wall underlays on timber and steel-framed buildings within the following scope:

- the scope limitations of NZBC Acceptable Solution E2/AS1, Paragraph 1.1 with regards to building height and floor plan area; and,
- with absorbent and non-absorbent wall claddings installed over an 18 mm minimum drained cavity; and,
- with masonry veneer in accordance with NZBC Acceptable Solution E2/AS1 for timber-framed buildings or specific design for steel-framed buildings; and,
- situated in NZS 3604 Wind Zones up to, and including, Extra High.

2.4 Tekton® Building Wrap has also been appraised for use on buildings subject to specific weathertightness design. Building designers are responsible for the building design and for the incorporation of Tekton® Building Wrap into their design in accordance with the declared properties and the instructions of Marshall Innovations Limited.

Readers are advised to check the validity of this Appraisal by referring to the Valid Appraisals listing on the BRANZ website, or by contacting BRANZ.

KDC - Approved Building Consent Document - BC210441 - Pg 433 of 512 - 30/08/2021 - ComplyNZ

Building Regulations

New Zealand Building Code (NZBC)

3.1 **In the opinion of BRANZ, Tekton® Building Wrap, if used, designed, installed and maintained in accordance with the statements and conditions of this Appraisal, will meet, or contribute to meeting the following provisions of the NZBC:**

Clause B2 DURABILITY: Performance B2.3.1 (a) not less than 50 years, B2.3.1 (b) 15 years and B2.3.2. Tekton® Building Wrap meets these requirements. See Paragraphs 9.1 and 9.2.

Clause E2 EXTERNAL MOISTURE: Performance E2.3.2. When used as part of the cladding system, Tekton® Building Wrap will contribute to meeting this requirement. See Paragraphs 12.1–12.3.

Clause F2 HAZARDOUS BUILDING MATERIALS: Performance F2.3.1. Tekton® Building Wrap meets this requirement.

Technical Specification

4.1 Tekton® Building Wrap is a 100 g/m^2 light grey sheet polypropylene membrane material approximately 0.6 mm thick.

4.2 The product is supplied in rolls 1.37 m x 37 m and 2.743 m x 37 m. The product is printed with the Tekton® logo repeated along the length of the roll. The rolls are wrapped with an instruction sticker.

Accessories

4.3 Accessories used with Tekton® Building Wrap which are supplied by the installer are:

- **Fixings** – staples, clouts, screws or proprietary wrap fixings, or other temporary fixings to attach the wall wrap to the framing.
- **Wall underlay support** – polypropylene strap, 75 mm galvanised mesh or galvanised wire, or vertical cavity battens where required to support the wall wrap in accordance with NZBC Acceptable Solution E2/AS1, Paragraph 9.1.8.5.

Handling and Storage

5.1 Handling and storage of the product, whether on-site or off-site, is under the control of the installer. The rolls must be protected from damage and weather. They must be stored on end, under cover, in clean, dry conditions and must not be crushed.

Technical Literature

6.1 Refer to the Appraisals listing on the BRANZ website for details of the current Technical Literature for Tekton® Building Wrap. The Technical Literature must be read in conjunction with this Appraisal. All aspects of design, use, installation and maintenance contained in the Technical Literature and within the scope of this Appraisal must be followed.

Design Information

Timber and Steel Framing

7.1 Studs must be provided at maximum 600 mm centres. Dwangs must be fitted flush between the studs at maximum 1,200 mm centres.

General

7.2 Tekton® Building Wrap is intended for use as an alternative to conventional building papers which are fixed over timber and steel-framed walls in order to limit the entry of wind into building cavities, and to act as a secondary barrier to wind-driven rain.

7.3 The material also provides a degree of temporary weather protection during early construction. However, the product will not make the building weathertight and some wetting of the underlying structure is always possible before the building is closed in. Hence, the building must be closed-in and made weatherproof before moisture sensitive materials such as wall or ceiling linings and insulation materials are installed.

Readers are advised to check the validity of this Appraisal by referring to the Valid Appraisals listing on the BRANZ website, or by contacting BRANZ.

KDC - Approved Building Consent Document - BC210441 - Pg 434 of 512 - 30/08/2021 - ComplyNZ

7.4 Tekton® Building Wrap must not be exposed to the weather or ultraviolet (UV) light for a total of more than 60 days before being covered by the wall cladding.

7.5 Tekton® Building Wrap is suitable for use under wall claddings as a wall underlay as called up in NZBC Acceptable Solution E2/AS1, Table 23, except that it must not be used with non-absorbent wall claddings such as vinyl or metal-based sidings or weatherboards in direct fixed installations. Tekton® is suitable for use under cavity-based wall claddings as a non-absorbent synthetic wall underlay as called up in NZS 2295, Table 2.4 on steel-framed buildings. Refer to Table 1.

7.6 Tekton® Building Wrap is also suitable for use as an air barrier to walls that are not lined, such as attic spaces at gable ends, as called up in NZBC Acceptable Solution E2/AS1, Paragraph 9.1.4 c). Refer to Table 1.

Table 1: NZBC E2/AS1 Table 23 Requirements

NZBC E2/AS1 Table 23 Wall Wrap Properties	**Property Performance Requirement**	**Actual Property Performance**
Absorbency	≥ 100 g/m^2	Classified as non-absorbent (See Paragraph 7.5)
Vapour Resistance	≤ 7 MN s/g	Pass
Water Resistance	≥ 20 mm	Pass
pH of Extract	≥ 5.5 and ≤ 8	9.78 *(Note 1)*
Shrinkage	≤ 0.5%	Pass
Mechanical	Edge tear and tensile strength	**Edge tear:** Machine direction = 228 N Cross direction = 186 N **Tensile strength:** Machine direction = 4.4 kN/m Cross direction = 3.9 kN/m
Air Barrier	Air resistance: ≥ 0.1 MN s/m^3	Pass

Note 1: Further testing of Tekton® Building Wrap was completed to determine the effect of the high pH level on the wall underlay and materials it is likely to come into contact with during its serviceable life. The testing confirmed that the high pH had no adverse effects on the wall underlay performance, or the performance of other materials.

7.7 In cavity installations where the cavity battens are installed at greater than 450 mm centres, the wall underlay must be supported between the battens to prevent the wall underlay bulging into the cavity space when bulk insulation is installed in the wall frame cavity in accordance with the requirements of NZBC Acceptable Solution E2/AS1, Paragraph 9.1.8.5.

Stucco Plaster

7.8 Tekton® Building Wrap is suitable for use as a non-rigid backing material for stucco plaster in accordance with the requirements of NZBC Acceptable Solution E2/AS1, Paragraph 9.3.5.1. The wall underlay must be supported with 75 mm galvanised mesh or plastic tape or wire at 150 mm centres run across the cavity battens to limit deflection to a maximum of 5 mm.

7.9 Tekton® Building Wrap may also be used as a slip layer over rigid backings for stucco plaster in accordance with the requirements of NZBC Acceptable Solution E2/AS1, Paragraph 9.3.3.1 b).

Readers are advised to check the validity of this Appraisal by referring to the Valid Appraisals listing on the BRANZ website, or by contacting BRANZ.

KDC - Approved Building Consent Document - BC210441 - Pg 435 of 512 - 30/08/2021 - ComplyNZ

Structure

8.1 Tekton® Building Wrap is suitable for use in all Wind Zones of NZS 3604 up to, and including, Very High when used as a flexible building underlay, and all Wind Zones of NZS 3604 up to, and including, Extra High when used as an overlay for rigid building underlays.

Durability

9.1 Tekton® Building Wrap meets code compliance with NZBC Clause B2.3.1 (a), not less than 50 years for building wraps used where the cladding durability requirement or expected serviceable life is not less than 50 years, and code compliance with NZBC Clause B2.3.1 (b), 15 years for building wraps used where the cladding durability requirement is 15 years.

Serviceable Life

9.2 Provided it is not exposed to the weather or ultraviolet (UV) light for a total of more than 60 days, and provided the exterior cladding is maintained in accordance with the cladding manufacturer's instructions and the cladding remains weather resistant, Tekton® Building Wrap is expected to have a serviceable life equal to that of the cladding.

Control of Internal Fire and Smoke Spread

10.1 Tekton® Building Wrap has an AS 1530 Part 2 flammability index of not greater than 5 and therefore meets the requirements of NZBC Acceptable Solution C/AS2, Paragraph 4.17.8 b), for the surface finish requirements of suspended flexible fabric used as an underlay to exterior cladding that is exposed to view in occupied spaces. It may therefore be used with no restrictions in all buildings.

Prevention of Fire Occurring

11.1 Separation or protection must be provided to the Tekton® Building Wrap from heat sources such as fireplaces, heating appliances and chimneys. Part 7 of NZBC Verification Method C/VM1 and Acceptable Solution C/AS1, and Acceptable Solution C/AS2 provide methods for separation and protection of combustible materials from heat sources.

External Moisture

12.1 Tekton® Building Wrap must be used behind claddings that meet the requirements of the NZBC, e.g. such as those covered by NZBC Acceptable Solution E2/AS1, or claddings covered by a valid BRANZ Appraisal.

12.2 Tekton® Building Wrap, when installed in accordance with the Technical Literature and this Appraisal, will assist in the total cladding systems compliance with NZBC Clause E2.

12.3 When used as an air barrier, particular care must be taken to ensure an air tight barrier is achieved, and weather sealing at all openings and penetrations through the cladding meets the requirements of the NZBC.

Installation Information

Installation Skill Level Requirements

13.1 Installation must always be carried out in accordance with the Tekton® Building Wrap Technical Literature and this Appraisal by, or under the supervision of, a Licensed Building Practitioner (LBP) with the relevant Licence Class.

Readers are advised to check the validity of this Appraisal by referring to the Valid Appraisals listing on the BRANZ website, or by contacting BRANZ.

KDC - Approved Building Consent Document - BC210441 - Pg 436 of 512 - 30/08/2021 - ComplyNZ

Wrap Installation

14.1 Tekton® Building Wrap must be fixed to all framing members at maximum 300 mm centres with hot-dip galvanised, large-head clouts 20 mm long, zinc plated 6-8 mm staples, self-drilling screws, or proprietary wrap fixings. The membrane must be pulled taut over the framing before fixing.

14.2 Tekton® Building Wrap must be run horizontally and must extend from the upper-side of the top plate to the under-side of the bearers or wall plates supporting ground floor joists, or below bottom plates on concrete slabs. Horizontal laps must be no less than 75 mm wide, with the direction of the lap ensuring that water is shed to the outer face of the membrane. End laps must be made over framing and be no less than 150 mm wide.

14.3 The wall underlay should be run over openings and these left covered until windows and doors are ready to be installed. Openings are formed in the membrane by cutting on a 45 degree diagonal from each corner of the penetration. The flaps of the cut membrane must be folded inside the opening and stapled to the penetration framing. Excess wall underlay may be cut off flush with the internal face of the wall frame.

14.4 Tekton® Building Wrap can be added as a second layer over head flashings in accordance with the requirements of NZBC Acceptable Solution E2/AS1, Paragraph 9.1.10.3.

14.5 When fixing the product in windy conditions, care must be taken due to the large sail area created by wide roll widths.

14.6 Any damaged areas of Tekton® Building Wrap, such as tears, holes or gaps around service penetrations, must be repaired. Damaged areas can be repaired by covering with new material lapping the damaged area by at least 150 mm and taping, or by taping small tears.

Inspections

14.7 The Technical Literature must be referred to during the inspection of Tekton® Building Wrap installations.

Basis of Appraisal

The following is a summary of the technical investigations carried out:

Tests

15.1 The following tests have been carried out on Tekton® Building Wrap by Scion: folding strength of paper in accordance with AS/NZS 1301.423; edge tear resistance and tensile strength in accordance with AS/NZS 4200.1 and air resistance in accordance with BS 6538-3.

15.2 The following tests have been carried out on Tekton® Building Wrap by BRANZ: absorbency in accordance with AS/NZS 4201.6, vapour transmission in accordance with ASTM E 96B, shrinkage in accordance with AS/NZS 4201.3, water barrier in accordance with AS/NZS 4201.4 and pH of extract in accordance with AS/NZS 1301.421. A range of these tests were completed before and after Tekton® Building Wrap was exposed to UV light.

15.3 The flammability index of Tekton® Building Wrap has been evaluated in accordance with AS 1530.2.

Other Investigations

16.1 A durability opinion was given by BRANZ technical experts.

16.2 Site inspections were carried out by BRANZ to assess methods used for the installation of Tekton® Building Wrap, and to examine completed installations.

16.3 The marketer's Technical Literature, including installation instructions, have been examined by BRANZ and found to be satisfactory.

Readers are advised to check the validity of this Appraisal by referring to the Valid Appraisals listing on the BRANZ website, or by contacting BRANZ.

KDC - Approved Building Consent Document - BC210441 - Pg 437 of 512 - 30/08/2021 - ComplyNZ

Quality

17.1 The manufacture of Tekton® Building Wrap has not been examined by BRANZ, but details regarding the quality and composition of the materials used were obtained by BRANZ and found to be satisfactory. BRANZ has taken note of product certification by ICC-ES and CCMC covering quality aspects associated with the product.

17.2 The quality of supply to the market is the responsibility of Marshall Innovations Limited.

17.3 Building designers are responsible for the design of the building, and for the incorporation of the wall wrap into their design in accordance with the instructions of Marshall Innovations Limited.

17.4 Quality of installation is the responsibility of the installer, in accordance with the instructions of Marshall Innovations Limited.

Sources of Information

- AS 1530.2–1993 Test for flammability of materials.
- AS/NZS 1301.421s: 1998 Determination of the pH value of aqueous extracts of paper, board and pulp – cold extraction method.
- AS/NZS 4200.1:1994 Pliable building membranes and underlays – materials.
- AS/NZS 4201.1:1994 Pliable building membranes and underlays – Methods of test – Resistance to dry delamination.
- AS/NZS 4201.2:1994 Pliable building membranes and underlays – Methods of test – Resistance to wet delamination.
- AS/NZS 4201.3:1994 Pliable building membranes and underlays – Methods of test – Shrinkage.
- AS/NZS 4201.4:1994 Pliable building membranes and underlays – Methods of test – Resistance to water penetration.
- AS/NZS 4201.6:1994 Pliable building membranes and underlays – Methods of test – Surface water absorbency.
- BS 6538.3:1987 Method for determination of air permeance using the Garley apparatus.
- NZS 2295:2006 Pliable, permeable building underlays.
- NZS 3604:2011 Timber-framed buildings.
- Ministry of Business, Innovation and Employment Record of amendments - Acceptable Solutions, Verification Methods and handbooks.
- The Building Regulations 1992.

Amendments

Amendment No. 1, dated 04 August 2021.

This Appraisal has been amended to reflect building code updates relating to fire.

Readers are advised to check the validity of this Appraisal by referring to the Valid Appraisals listing on the BRANZ website, or by contacting BRANZ.

KDC - Approved Building Consent Document - BC210441 - Pg 438 of 512 - 30/08/2021 - ComplyNZ

In the opinion of BRANZ, Tekton® Building Wrap is fit for purpose and will comply with the Building Code to the extent specified in this Appraisal provided it is used, designed, installed and maintained as set out in this Appraisal.

The Appraisal is issued only to Marshall Innovations Limited, and is valid until further notice, subject to the Conditions of Appraisal.

Conditions of Appraisal

1. This Appraisal:
   a) relates only to the product as described herein;
   b) must be read, considered and used in full together with the Technical Literature;
   c) does not address any Legislation, Regulations, Codes or Standards, not specifically named herein;
   d) is copyright of BRANZ.
2. Marshall Innovations Limited:
   a) continues to have the product reviewed by BRANZ;
   b) shall notify BRANZ of any changes in product specification or quality assurance measures prior to the product being marketed;
   c) abides by the BRANZ Appraisals Services Terms and Conditions;
   d) warrants that the product and the manufacturing process for the product are maintained at or above the standards, levels and quality assessed and found satisfactory by BRANZ pursuant to BRANZ's Appraisal of the product.
3. BRANZ makes no representation or warranty as to:
   a) the nature of individual examples of, batches of, or individual installations of the product, including methods and workmanship;
   b) the presence or absence of any patent or similar rights subsisting in the product or any other product;
   c) any guarantee or warranty offered by Marshall Innovations Limited.
4. Any reference in this Appraisal to any other publication shall be read as a reference to the version of the publication specified in this Appraisal.
5. BRANZ provides no certification, guarantee, indemnity or warranty, to Marshall Innovations Limited or any third party.

For BRANZ

Chelydra Percy
Chief Executive

Date of Issue:
14 June 2019

Readers are advised to check the validity of this Appraisal by referring to the Valid Appraisals listing on the BRANZ website, or by contacting BRANZ.

DRYDEN WoodOil PROTECTS EXTERIOR TIMBERS NATURALLY

KDC - Approved Building Consent Document - BC210441 - Pg 439 of 512 - 30/08/2021 - ComplyNZ

Dryden WoodOil – Cleaning & Maintenance Guide **Data Sheet**

SOFT WASHING Dryden WoodOil

We recommend annual soft washing of the surface to remove surface contaminants (dust, pollen, etc) with clean water; this has been proven to lengthen the life of Dryden WoodOil. This should also be done prior to any re-coats of Dryden WoodOil if in good maintenance.

To soft wash we recommend the use of a waterblaster or power washer, set on the lowest possible pressure and a wide fan for cedar cladding. Do not use rotary, round or Needle or point heads on waterblasters for this use.

Waterblasting Cedar weatherboard claddings is acceptable – as long as the nozzle is not brought too close to the surface (less than 500mm) and the spray is not directed closely around door openings, window frames and other openings in the cladding.

We recommend a flat fan-like spray of water as it is useful for cleaning Dryden WoodOil coated surfaces like sides of houses, roofs and Decks. The spray is not as aggressive as that produced by a rotary jet, but caution is needed with oiled surfaces because they can be damaged if the spray is held too close.

The cedar can be damaged if you use a high pressure. It's tempting because you may think the higher the pressure, the cleaner your timbers will be, but this is not correct.

Pre soak the timber surface, wait 5 minutes then start pressure washing going the direction of the timbers, working either vertical or horizontal along the lengths of timber using back and forth strokes working from the top of the cedar area down to the bottom of the cladding. Continue until all of the cedar cladding is clean.

If you find loss of water repellency or colourtone (oxidised) on some walls during this wash process then those should be considered for a Dryden WoodOil maintanence coat.

STRONG WASH Dryden WoodOil or Uncoated Timbers

If for any reason maintenance has not been kept up or where timbers have not been previously coated and have silvered, weathered and oxidised a stronger wash using a Chemical may be required prior to coating with Dryden WoodOil. See Dryden SurfaceCleaner Tech Sheet.

Add Dryden SurfaceCleaner mixing 100g with 10 litres of clean water in a clean container (spray pack) and apply directly to surface to be cleaned, or add 100g Dryden SurfaceCleaner to 1 litre water and feed through waterblaster on max ventutri. Saturate surface to be cleaned starting from bottom going to the top, and leave for 15 – 20 minutes, keeping wet (spray mist). Overcast day or cooler temperatures are best.

Then waterblast off with maximum 60-80 bar, low pressure and wide fan setting (no turbo nozzle) with long sweeping motions going direction of timber, starting at the top of area to be cleaned.

Watch water pressure as not to damage soft timbers as above.

NOTE: Water blasters are better used with low pressure and high water volumes, 13 litres per minute plus. If you attempt this with lower water volume it is harder to control the surface reaction as to marking and damaging the timbers.

MAINTENANCE

Coverage
Coverage refers to normal conditions, for instances where it's colder in temperature, timber that isn't as absorbent or is full of oil, etc... Just extend out the re-coat time or coverage rate (if its 10m2 per litre apply 12 instead, as an example) so you in affect have the gloss go by the next day, don't load up the wood surface, it will only take and hold so much oil.

Rubber & Butyl Surfaces
Dryden WoodOil can affect rubber adhesives and butyl surfaces if not washed/wiped off soon after contact.

Dryden WoodOil applied to wooden shingles does not usually affect the butyl underlay. It is accepted that most of the industry now use non-rubber base glues. Inquiries should be made to manufacturer. If coating around butyl surfaces, be sure to keep all surrounding surfaces protected and clean during and after application of Dryden WoodOil.

COLOUR TONING

Dryden WoodOil is available in a range of colours to help maintain and complement timber character and colour. It is recommended that if a colour is chosen that for maximum retention it is used in all applications of Dryden WoodOil to the timber.

Dryden WoodOil colours are approximate only, as the actual raw timber colour, seasoning and application rate will determine the final colour achieved. Colours on dressed faced timber may require a further coat at 12 months due to reduced coverage rates on dressed compared to band sawn timber.

Dryden WoodOil Clear will silver and weather naturally as exposed to UV, for ease of maintenance we would recommend this for outdoor furniture, pergolas, decking, shingles and shakes or where natural silvered timber look is required with waterproofing for timber longevity.

Dryden WoodOil Slate colourtone gives silvered uniformity up under eaves and doorways where Dryden WoodOil clear will remain new natural tone and transition out to silvered, colourtone Slate may need less maintenance due to the tone being natural silvered when seasoned.
A more natural appearance is obtained by colour being contained by the surface fibre. Because of this colour retention is better on rough timber than on smooth timbers.

KDC - Approved Building Consent Document - BC210441 - Pg 440 of 512 - 30/08/2021 - ComplyNZ

KDC - Approved Building Consent Document - BC210441 - Pg 441 of 512 - 30/08/2021 - ComplyNZ

Re-application
After appropriate initial coats re-application of Dryden WoodOil at up to two years to the areas where the surface exhibits signs of losing capability to "bead water", colour tone is faded or oxidised principally northern exposed faces. This coat may be extended given better quality environmental conditions including shading, e.g. soffits.

The variety of building locality and weather conditions found in New Zealand means that in some cases recoating may be necessary within this two years.

Keep in mind that durability of water repellency and colour tone is proportional to the amount of Dryden WoodOil in the timber. Thicker timbers will require additional coats to offer this durability. Dryden WoodOil Clear (no colourtone) will silver and weather naturally.

For ongoing preservation only one coat of Dryden WoodOil Clear should be applied up to 3 years given appropriate initial coats.

We recommend annual soft washing of the surface to remove surface contaminants (dust, pollen, etc) with clean water. This should also be done prior to any re-coats of Dryden WoodOil if in good maintenance. If for any reason maintenance has not been kept up a stronger chemical wash may be required prior to re-coating with Dryden WoodOil. Please see separate notes: Dryden Cleaning Guide.

Please note: Faded or oxidised coating when still consistent, must not be cleaned off. When WoodOil is reapplied over the faded or oxidised coating, the coating will be reconstituted extending UV attributes and cosmetic life.

Graffiti Stains
If Dryden WoodOil treated timbers are marked with graffiti a careful light wash on the area with a waterblaster on a wide fan may be all that is required, when dry if paint still remains a small amount of paint stripper (Selley's or Dad's type stripper) applied to the affected area and left a short time until the paint is softened then a water wash as above with a waterblaster to remove will finish the job. Then when dry apply a coat of Dryden WoodOil same colour as previously applied to affected area.

COMPLETION & CLEAN UP

Uniform Colour Application
Leave the whole of this work uniform in colour, at the correct m^2 rate, free from painting defects, clean and unmarked and to the standard required by following procedures. If, on the next day, there are wet patches, draw off excess with Dryden WoodOiled speed brush.

Clean Up
Clean up with mineral turpentine or hot water and detergent for spray equipment, brushes and clothes. These also help with over-spray or accidental spillage on unwanted surfaces such as windows; use a wiping rag on smooth surfaces and a brush on rough surfaces.

INFORMATION:
If clarification or further information is needed the user should contact this company.
The responsibility for products sold is subject to our standard terms and conditions.
For additional information on Dryden WoodOil please refer to Dryden SurfaceCleaner and Dryden WoodOil Data Sheet.

For urgent emergency information only:
National Poisons Centre 0800 704 766

For additional information contact:
Dryden Distribution Ltd
Free Phone: 0800 379 336 Phone: (09) 448 1335 Fax: (09) 448 1339
PO Box 300 661 – Albany Mega Centre – Auckland 0752
or visit www.dryden.co.nz

Revised Primary Dryden WoodOil Cleaning and Maintenance Guide: October 2017

KDC - Approved Building Consent Document - BC210441 - Pg 442 of 512 - 30/08/2021 - ComplyNZ

EzPanel
LIGHTWEIGHT CONCRETE CLADDING SYSTEM

Specialized CONSTRUCTION PRODUCTS LTD

KDC - Approved Building Consent Document - BC210441 - Pg 443 of 512 - 30/08/2021 - ComplyNZ

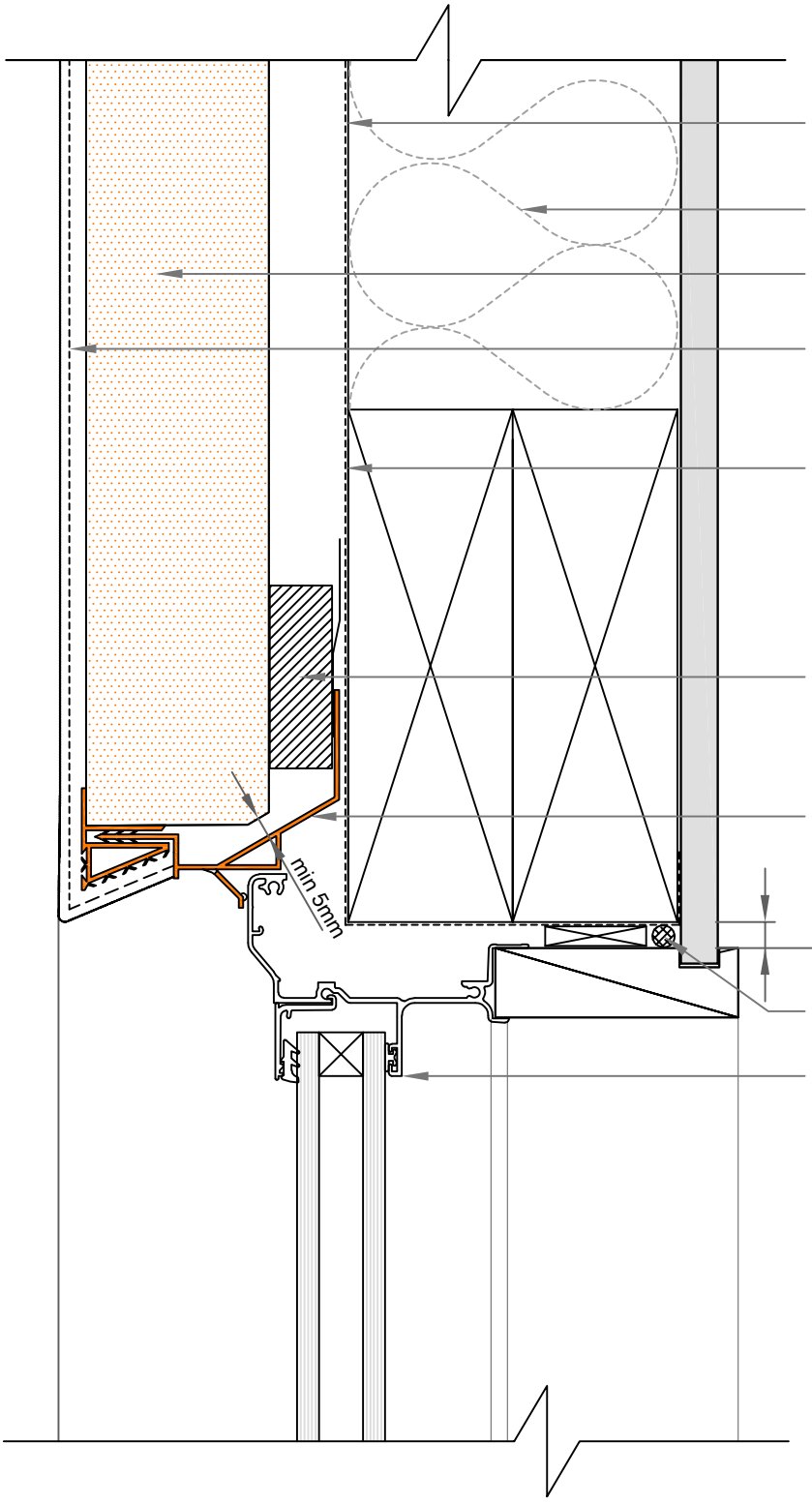

Breather type building wrap taped onto EZpanel head flashing with Protecto Tape (or similar)

Cavity insulation

50mm EZpanel

Selected plaster finish

Building wrap to be continued under lintel and taped with Protecto Sill System (or similar) at corners by builder

Discontinuous horizontal 50mm x 21mm EPS battens on 15° slope and no more than 100mm in length as required for fixing

EZpanel proprietary head flashing

7.5mm

Air seal - to be installed by builder

Selected aluminium joinery

Note:
Punchings in head flashing provide ventilation openings of 1000mm^2 per lineal meter

01A

SCALE: 1:2

WINDOW HEAD DETAIL

50mm EZpanel - 20mm cavity with EPS Battens

© copyright 2015 Specialized Construction Products Ltd

All Dimensions to be site checked before construction & installation

Feb 2020

EzPanel
LIGHTWEIGHT CONCRETE CLADDING SYSTEM

Specialized CONSTRUCTION PRODUCTS LTD

KDC - Approved Building Consent Document - BC210441 - Pg 444 of 512 - 30/08/2021 - ComplyNZ

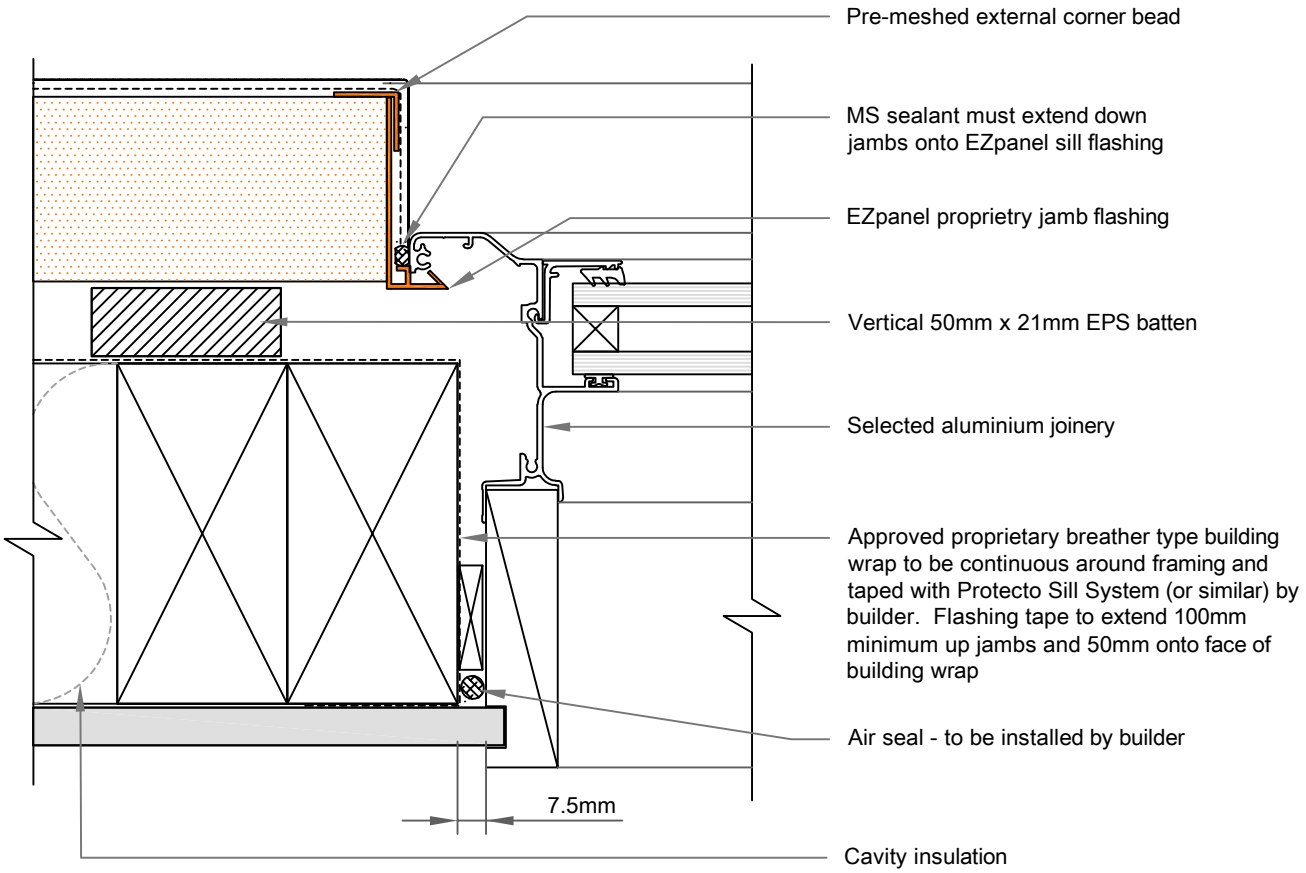

Note:
Jambs and head flashing must be sealed or PVC welded where they intersect

Caution:
To ensure the proprietary flashing for this system can be installed correctly, please allow a gap of 24mm from the surface of the building paper to the backside of the aluminium joinery

02A
SCALE: 1:2

WINDOW JAMB DETAIL

50mm EZpanel - 20mm cavity with EPS Battens

© copyright 2015 Specialized Construction Products Ltd
Mar 2020

All Dimensions to be site checked before construction & installation

EzPanel
LIGHTWEIGHT CONCRETE CLADDING SYSTEM

Specialized CONSTRUCTION PRODUCTS LTD

KDC - Approved Building Consent Document - BC210441 - Pg 445 of 512 - 30/08/2021 - ComplyNZ

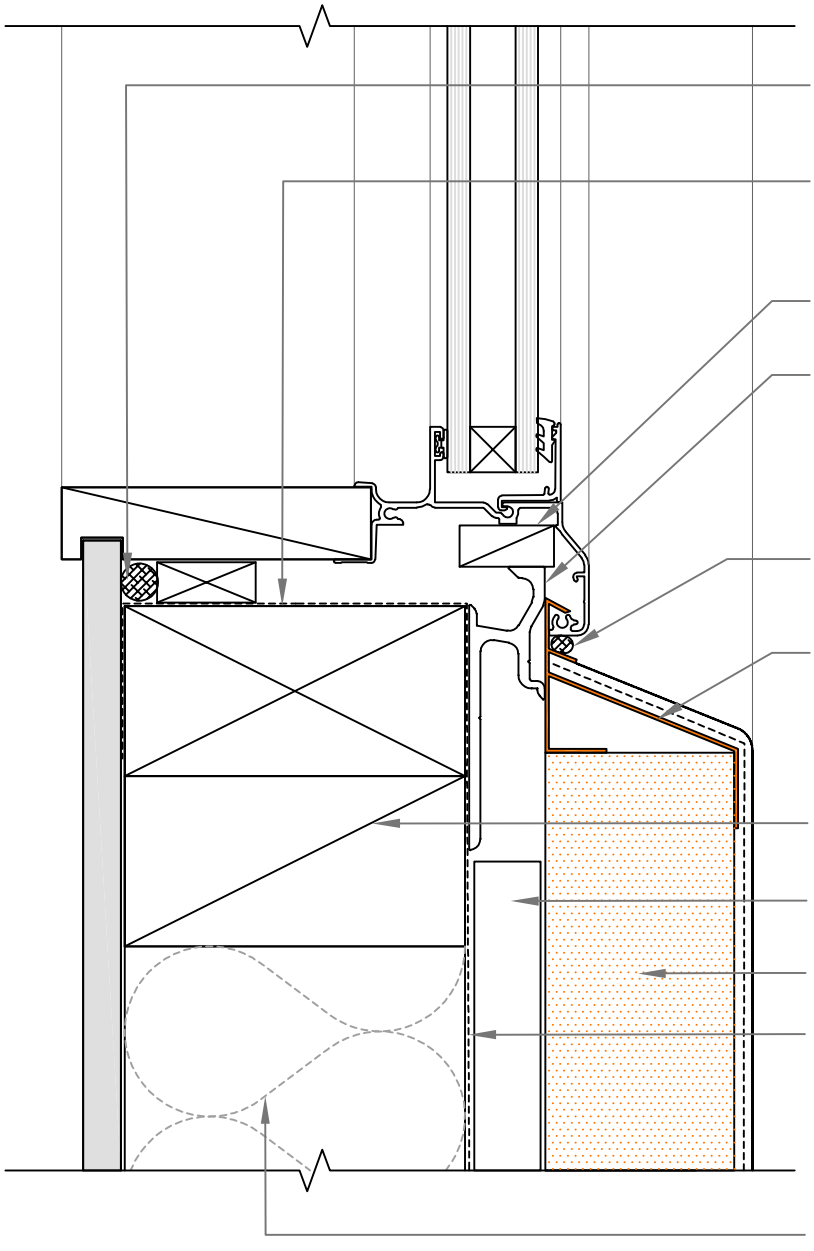

Note:
A 5° sloped sill trimmer must be used if the back of the glazing pocket is positioned back past the line of wall frame

Caution:
To ensure the proprietary flashing for this system can be installed correctly, please allow a gap of 24mm from the surface of the building paper to the backside of the aluminium joinery

03A
SCALE: 1:2

WINDOW SILL DETAIL

50mm EZpanel - 20mm cavity with EPS Battens

© copyright 2015 Specialized Construction Products Ltd
Mar 2020

All Dimensions to be site checked before construction & installation

EzPanel
LIGHTWEIGHT CONCRETE CLADDING SYSTEM

Specialized CONSTRUCTION PRODUCTS LTD

KDC - Approved Building Consent Document - BC210441 - Pg 446 of 512 - 30/08/2021 - ComplyNZ

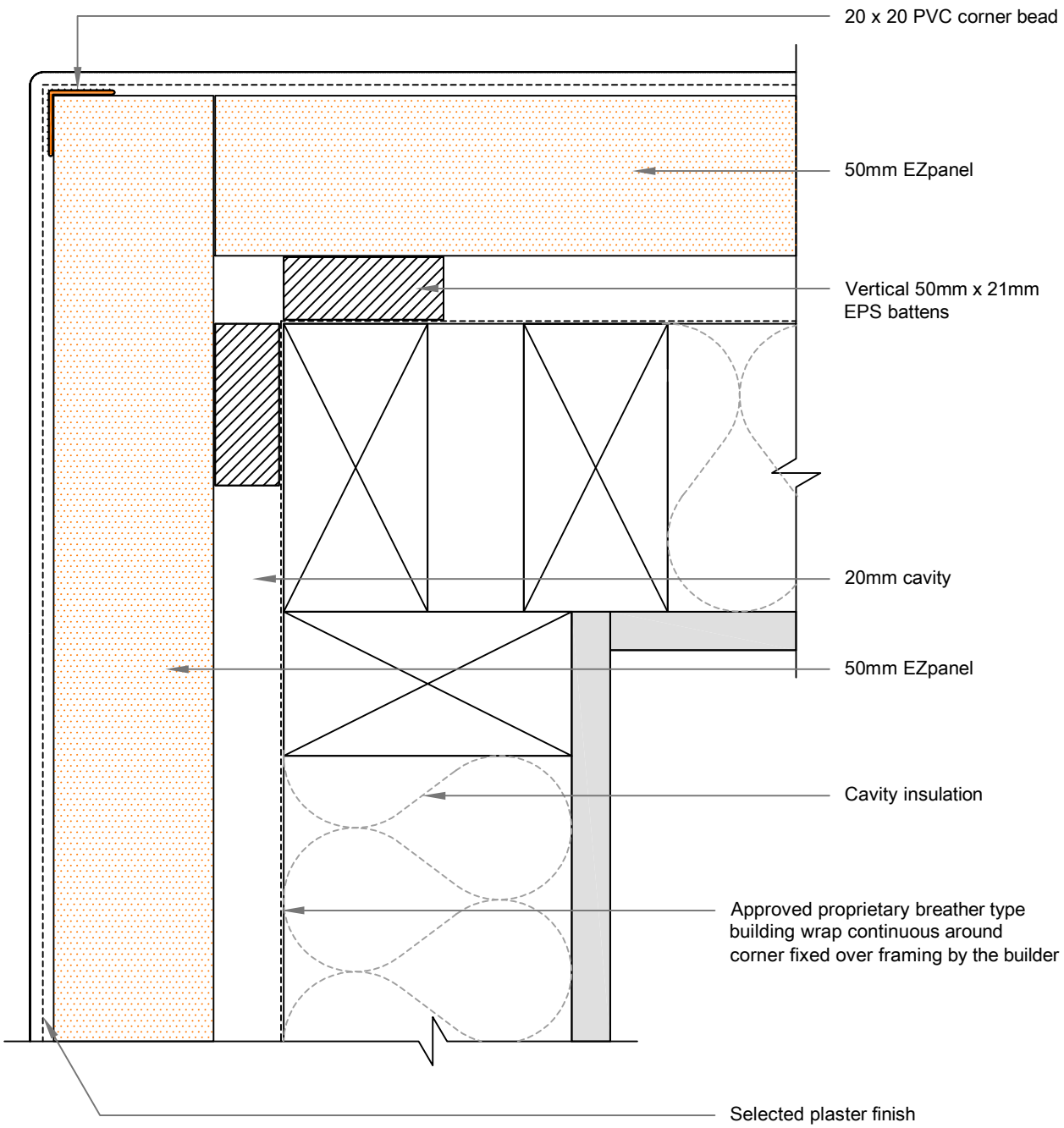

05A EXTERNAL CORNER DETAIL

SCALE: 1:2

50mm EZpanel - 20mm cavity with EPS Battens

© copyright 2015 Specialized Construction Products Ltd

All Dimensions to be site checked before construction & installation

Mar 2020

EzPanel
LIGHTWEIGHT CONCRETE CLADDING SYSTEM

Specialized CONSTRUCTION PRODUCTS LTD

KDC - Approved Building Consent Document - BC210441 - Pg 447 of 512 - 30/08/2021 - ComplyNZ

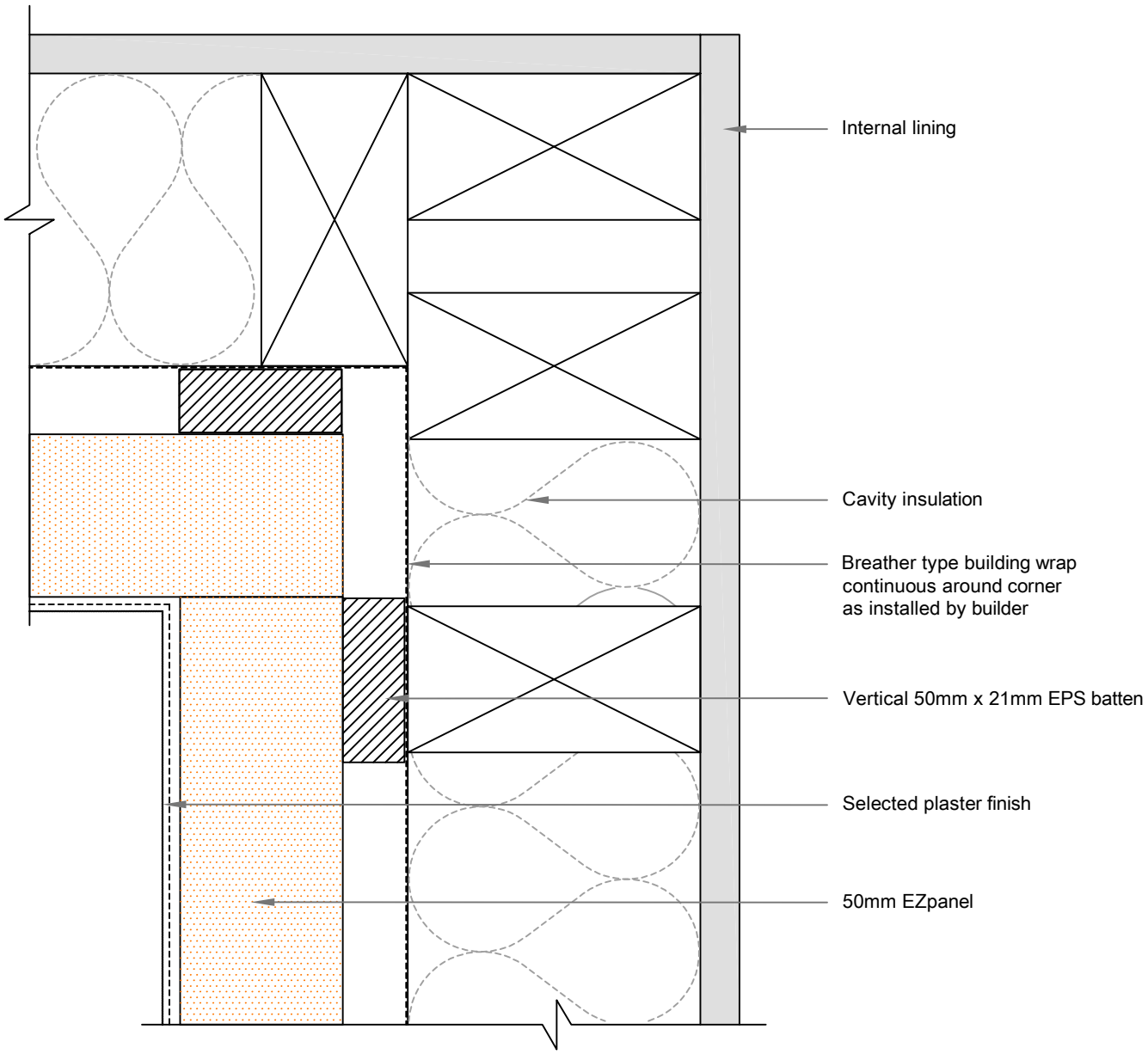

06A INTERNAL CORNER DETAIL

SCALE: 1:2

50mm EZpanel - 20mm cavity with EPS Battens

© copyright 2015 Specialized Construction Products Ltd

All Dimensions to be site checked before construction & installation

Mar 2020

EzPanel
LIGHTWEIGHT CONCRETE CLADDING SYSTEM

Specialized CONSTRUCTION PRODUCTS LTD

KDC - Approved Building Consent Document - BC210441 - Pg 448 of 512 - 30/08/2021 - ComplyNZ

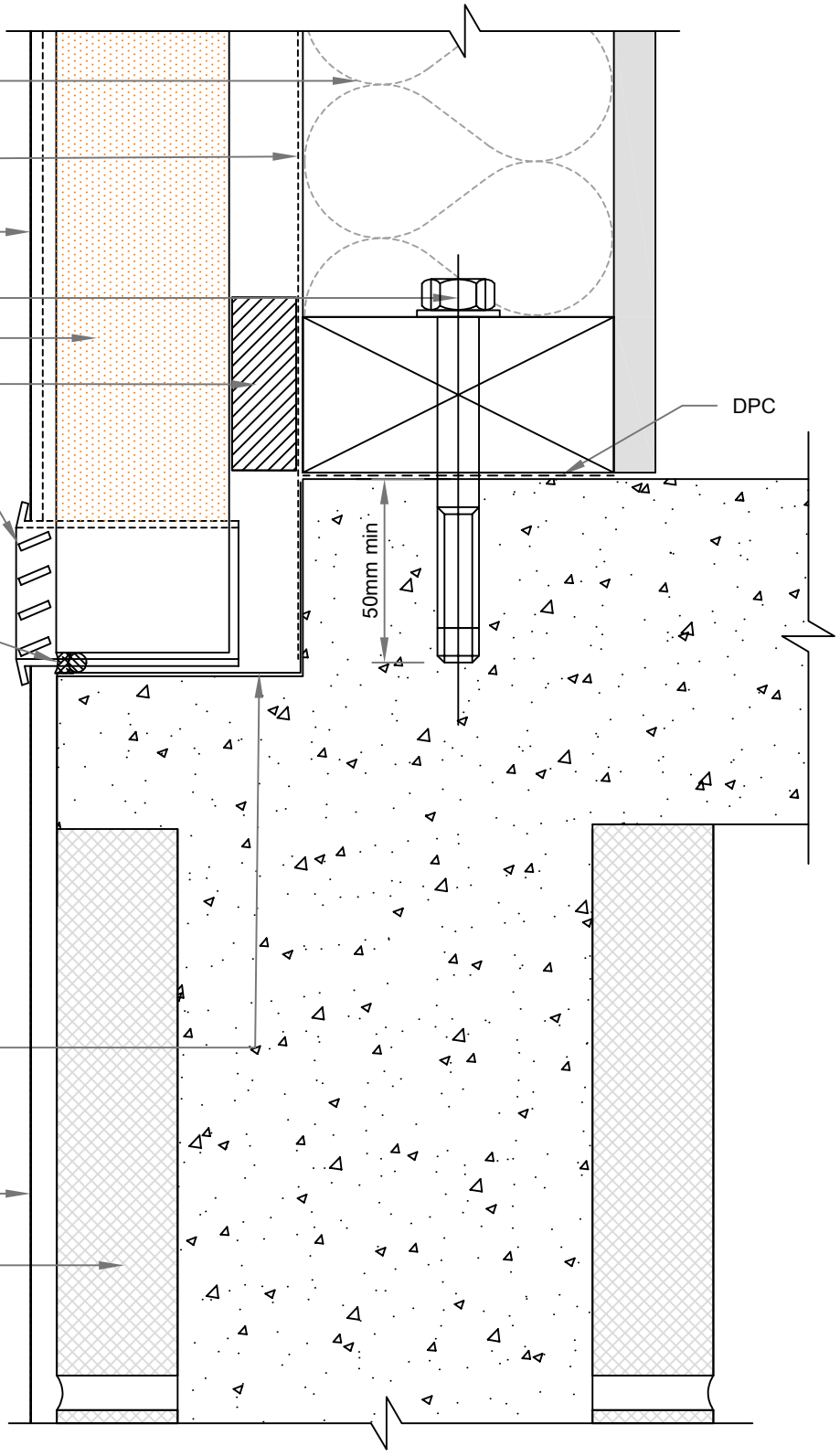

07D REBATED CONCRETE SLAB DETAIL

SCALE: 1:2

50mm EZpanel - 20mm cavity with EPS Battens

© copyright 2015 Specialized Construction Products Ltd

All Dimensions to be site checked before construction & installation

Mar 2020

EzPanel
LIGHTWEIGHT CONCRETE CLADDING SYSTEM

Specialized CONSTRUCTION PRODUCTS LTD

KDC - Approved Building Consent Document - BC210441 - Pg 449 of 512 - 30/08/2021 - ComplyNZ

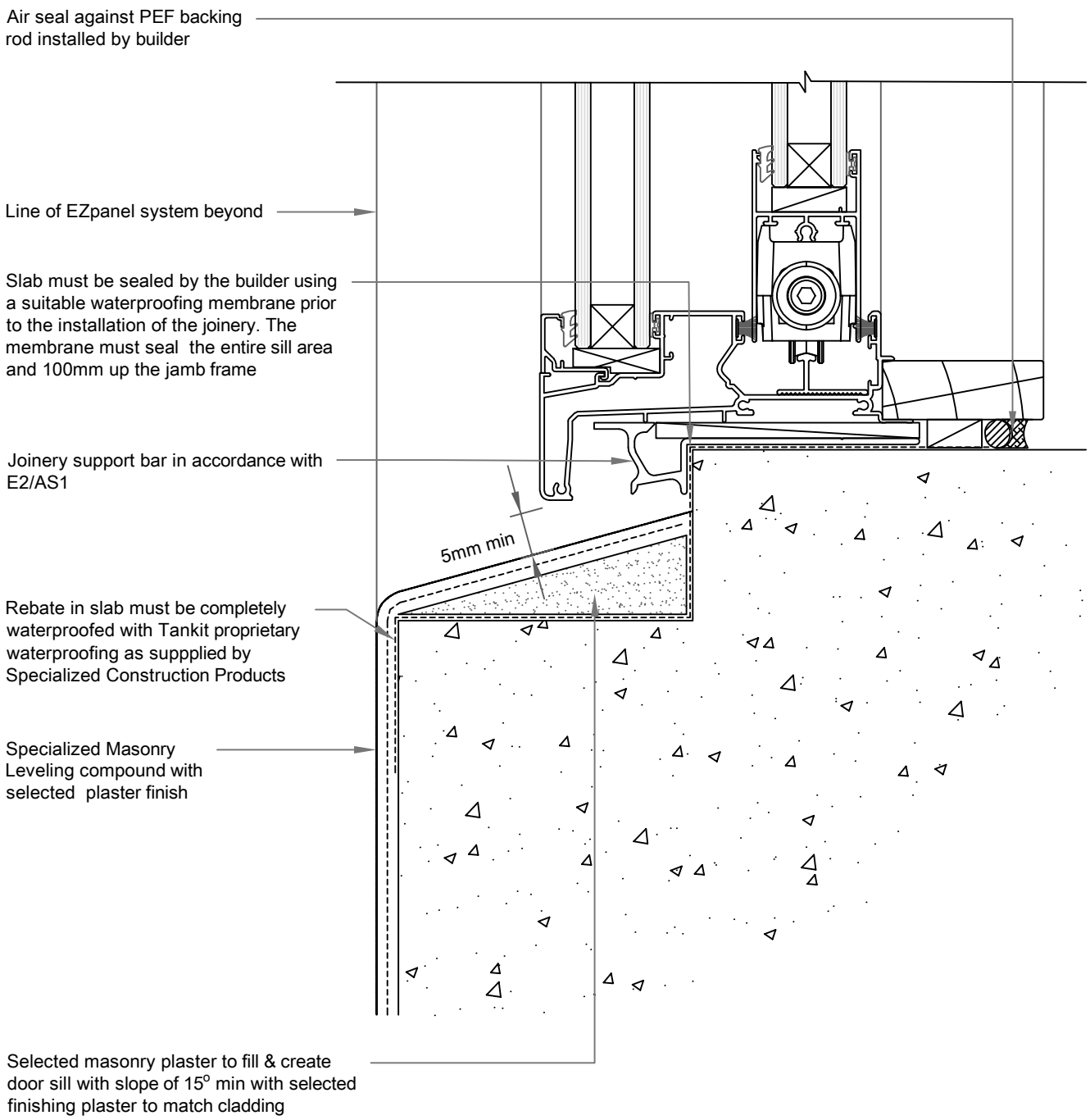

09C
SCALE: 1:2

DOOR SILL DETAIL - REBATED SLAB

50mm EZpanel - 20mm cavity with EPS Battens

© copyright 2015 Specialized Construction Products Ltd
Mar 2020

All Dimensions to be site checked before construction & installation

EzPanel
LIGHTWEIGHT CONCRETE CLADDING SYSTEM

Specialized CONSTRUCTION PRODUCTS LTD

KDC - Approved Building Consent Document - BC210441 - Pg 450 of 512 - 30/08/2021 - ComplyNZ

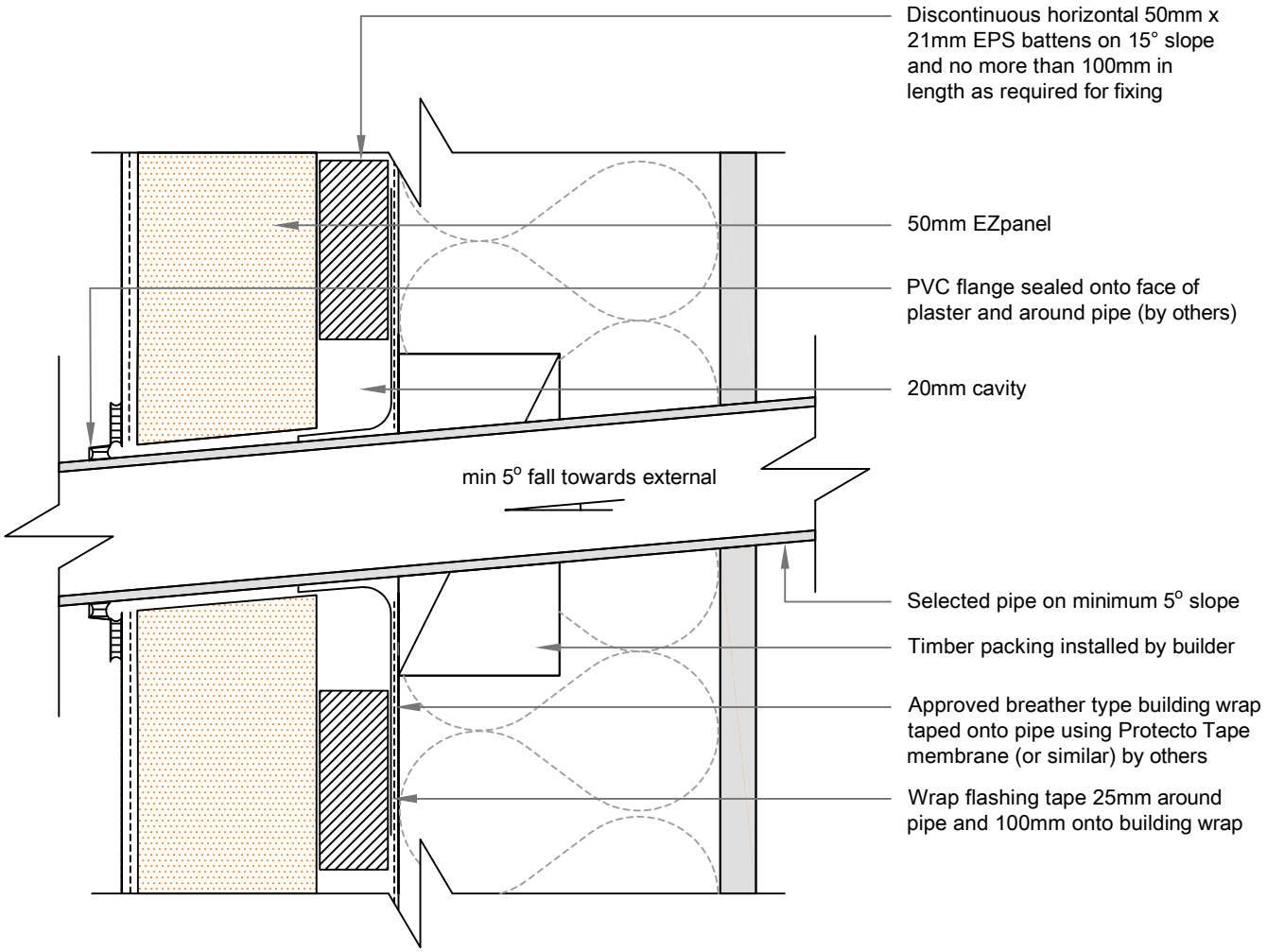

16A
SCALE: 1:2

PIPE PENETRATION DETAIL

50mm EZpanel - 20mm cavity with EPS Battens

© copyright 2015 Specialized Construction Products Ltd
Mar 2020

All Dimensions to be site checked before construction & installation

EzPanel
LIGHTWEIGHT CONCRETE CLADDING SYSTEM

Specialized CONSTRUCTION PRODUCTS LTD

KDC - Approved Building Consent Document - BC210441 - Pg 451 of 512 - 30/08/2021 - ComplyNZ

Note: this drawing is outside of the BRANZ Appraisal.

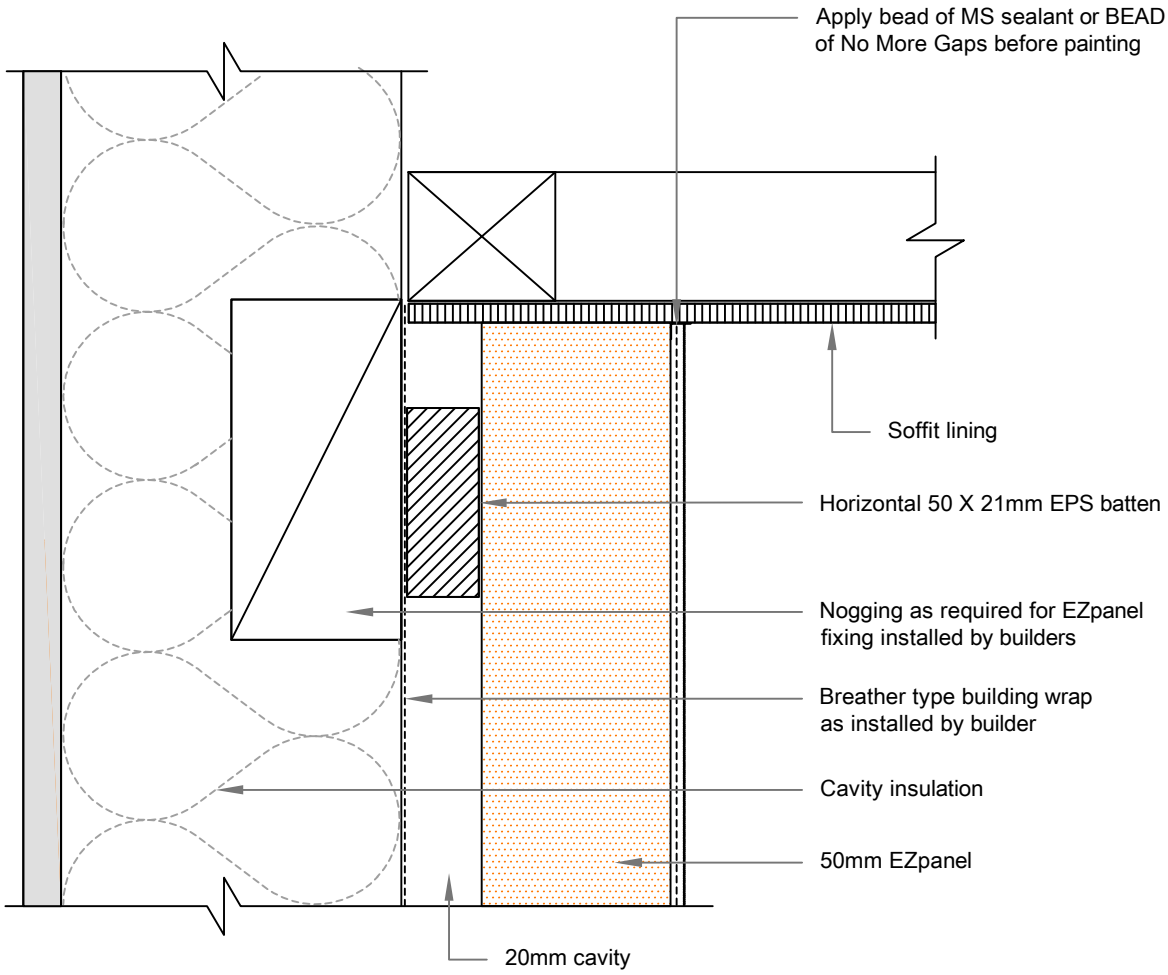

17A SOFFIT DETAIL

SCALE: 1:2

50mm EZpanel - 20mm cavity with EPS Battens

© copyright 2015 Specialized Construction Products Ltd

All Dimensions to be site checked before construction & installation

Mar 2020

EzPanel
LIGHTWEIGHT CONCRETE CLADDING SYSTEM

Specialized CONSTRUCTION PRODUCTS LTD

KDC - Approved Building Consent Document - BC210441 - Pg 452 of 512 - 30/08/2021 - ComplyNZ

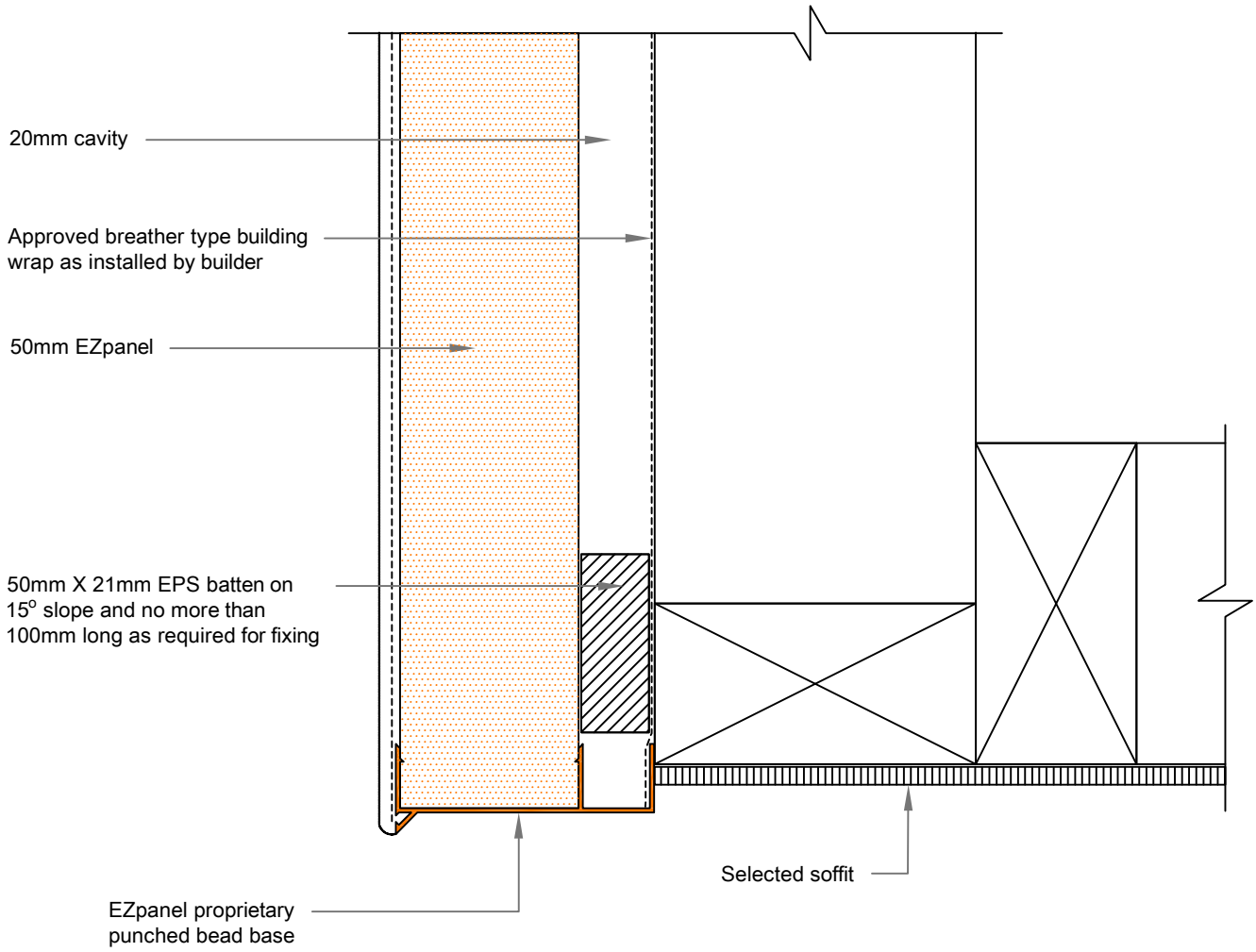

17B SOFFIT EDGE DETAIL

SCALE: 1:2

50mm EZpanel - 20mm cavity with EPS Battens

© copyright 2015 Specialized Construction Products Ltd

All Dimensions to be site checked before construction & installation

Mar 2020

EzPanel
LIGHTWEIGHT CONCRETE CLADDING SYSTEM

Specialized CONSTRUCTION PRODUCTS LTD

KDC - Approved Building Consent Document - BC210441 - Pg 453 of 512 - 30/08/2021 - ComplyNZ

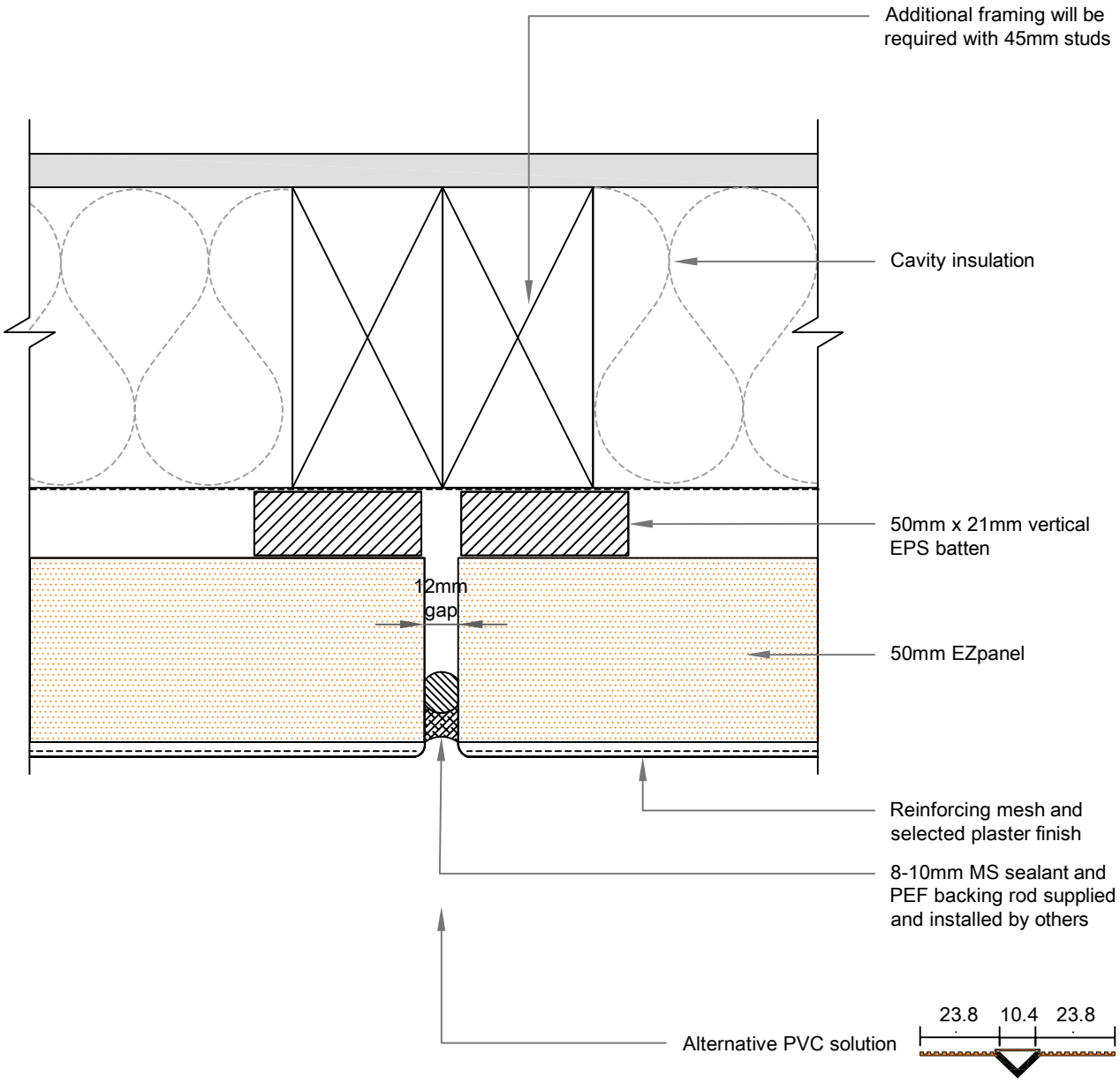

18B VERTICAL CONTROL JOINT DETAIL

SCALE: 1:2

50mm EZpanel - 20mm cavity with EPS Battens

© copyright 2015 Specialized Construction Products Ltd

All Dimensions to be site checked before construction & installation

Mar 2020

KDC - Approved Building Consent Document - BC210441 - Pg 454 of 512 - 30/08/2021 - ComplyNZ

POLARIS
SOFT CLOSE HINGE
Product Guide

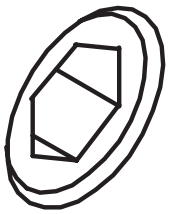

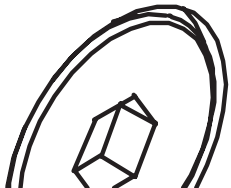

POLARIS
SOFT CLOSE HINGE

KDC - Approved Building Consent Document - BC210441 - Pg 455 of 512 - 30/08/2021 - ComplyNZ

INTRODUCING POLARIS SOFT CLOSE HINGE
STATE-OF-THE-ART SELF-CLOSING HINGE FOR FRAMELESS GLASS

The Polaris Soft Close Hinge developed by Glass Hardware Australia is a unique self-closing hinge for use in all outdoor and indoor frameless glass applications. It was designed to meet the tough requirements of frameless glass pool fencing in Australia so can be used in all applications where glass doors or gates are needed. The Polaris Soft Close Hinge is designed to be resistant to chemicals, to operate in a wet environment and to withstand constant outdoor use and the harsh Australian weather.

To be used as a glass pool fence hinge meant it had to be durable, reliable and last for at least ten years. The sleek stainless steel construction makes it strong and durable but also makes it stylish and attractive. As an architectural feature it is minimalist and its design geometry is compatible with the toughened glass it supports.

The Polaris Soft Close Hinge uses a spring and shock absorbers to ensure gentle closing every time from any position, position, whether fully or only slightly open. The Polaris Soft Close Hinge closes with a soft and light action not only making it safe but also quiet in operation.

As a glass pool fence hinge it is the safest and most reliable hinge in the industry complying with the stringent Australian Standards AS1926 and AS 2820. Both the Royal Life Saving Society Australia and the Samuel Morris Foundation—organisations dedicated to preventing child drownings—have endorsed the product for use in Australian pools.

In 2010 & 2016 the Polaris Soft Close Hinge was awarded a prestigious Australian International Design Mark™ Award. Presented by Standards Australia, the Australian International Design Awards is Australia's premier design assessment program. Products were judged for their innovation, visual and emotional appeal, functionality, quality of manufacturing, usability (ergonomics and safety) and environmental sustainability.

Michael Stuart, the CEO of Glass Hardware Australia, is an industry insider with significant, first-hand experience of installation (and materials supply) and understands the needs of installers, customers and other major stakeholders in the industry. His passionate concern for the safety of glass pool fences has driven him to develop a soft close hinge that will not only meet Australia's safety standards for glass pool fences but is suitable for a range of indoor and outdoor applications.

The Polaris Soft Close Hinge is a state-of-the-art product that is ahead of its rivals in design, style and safety.

POLARIS
SOFT CLOSE HINGE

KDC - Approved Building Consent Document - BC210441 - Pg 456 of 512 - 30/08/2021 - ComplyNZ

CONTENTS

01 120 SERIES POOL HINGE 1-6

Glass to Glass
Glass to Wall
Glass to Post Brackets

02 130 SERIES POOL HINGE 7-8

Glass to Glass

03 220 SERIES INTERNAL HINGE 9-14

Glass to Glass
Glass to Wall
Glass to Door Jamb

04 320 SERIES SHOWER HINGE 15-18

Glass to Glass
Glass to Wall

05 LATCHES 19-28

Glass to Glass 90 degrees
Glass to Glass Reverse 90 degrees
Glass to Glass 180 degrees
Glass to Wall/Post
Magnalock assembly

06 DOOR STOPPERS 29-30

Glass to Glass 90 degrees (RHS or LHS)
Glass to Glass 180 degrees (RHS or LHS)
Glass to Surface
Glass to Glass Alternate

07 MAGNETIC DOOR HANDLES 31-34

Glass to Door Jamb
Glass to Glass

08 MISCELLANEOUS 35-38

120, 220 & 320 Series Hinge Glass to Glass cut out
120, 220 & 320 Series Hinge Glass to Wall/Post cut out
Magnetic Door Handles Glass Gate/Door cut out
Magnetic Receiver Glass Panel cut out

120 SERIES POOL HINGE
GLASS TO GLASS

KDC - Approved Building Consent Document - BC210441 - Pg 457 of 512 - 30/08/2021 - ComplyNZ

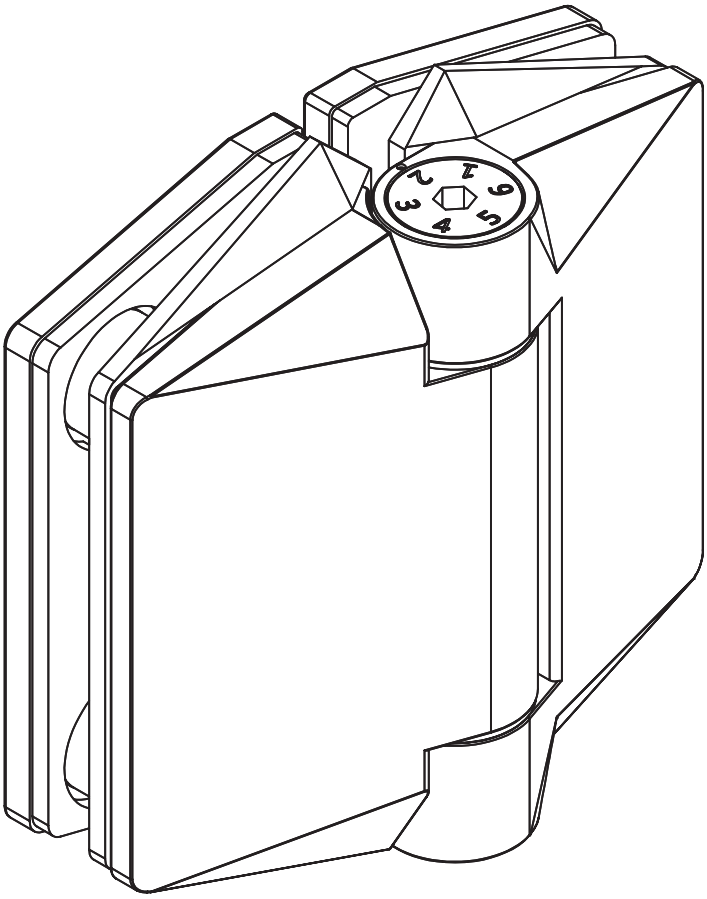

FINISHES AND FUNCTIONS

- 2205 GRADE STAINLESS STEEL
- POLISHED STAINLESS
- BRUSHED STAINLESS
- MATT BLACK
- SINGLEACTION
- SOFTCLOSE
- NON-HOLD OPEN
- ANTI-FOOT-HOLD GASKET

10mm
12mm

MAX.
900mm WIDE x
1500mm HIGH

MAX 45kg

— 10˚C
+ 50˚C

90˚

120 SERIES POOL HINGE

- SELF-CLOSING SAFETY HINGE FOR GLASS POOL FENCING
- TO BE USED WITH CHILD PROOF SAFETY LATCH
- COMPLIES WITH AUSTRALIAN STANDARDS FOR POOL GATE HARDWARE
- NATA ACCREDITED AND INDEPENDENTLY TESTED TO 10'000 CYCLES (NATA = NATIONAL ASSOCIATION OF TESTING AUTHORITIES AUSTRALIA)

KDC - Approved Building Consent Document - BC210441 - Pg 458 of 512 - 30/08/2021 - ComplyNZ

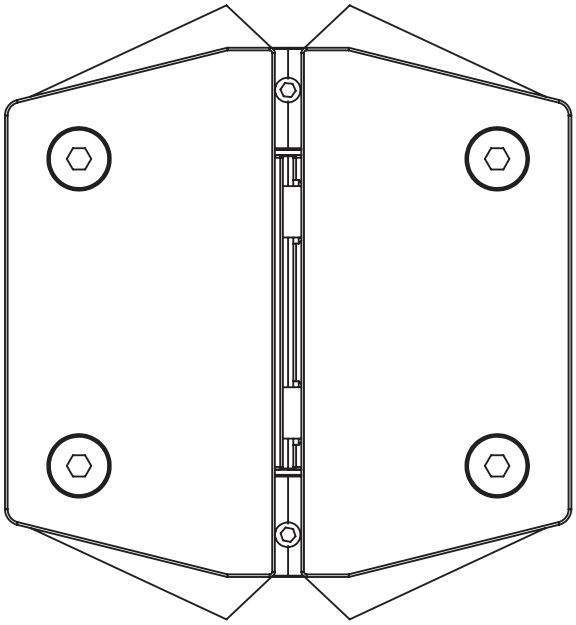

REAR VIEW

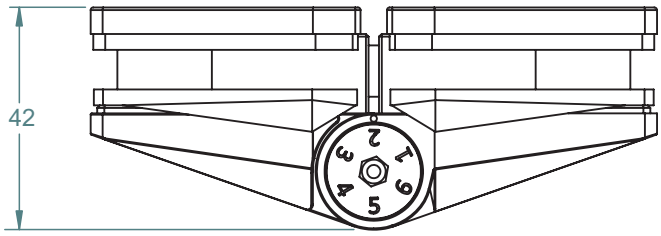

TOP VIEW

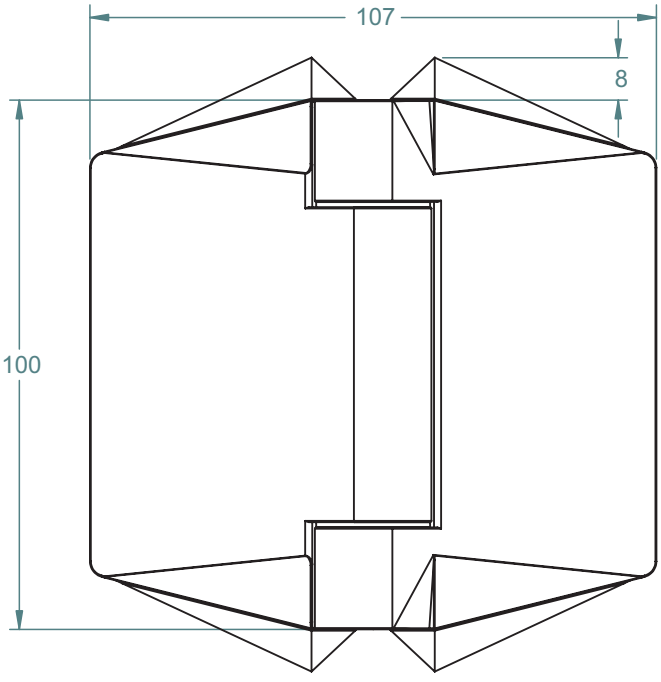

FRONT VIEW

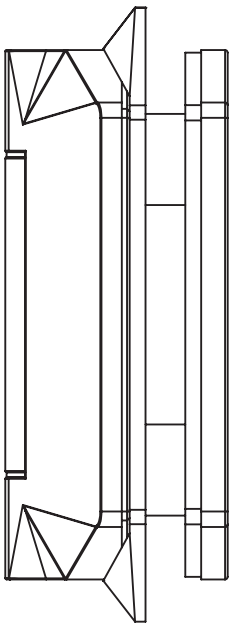

SIDE VIEW

TO ORDER SPECIFY:

- **120PGGP** POLISHED FINISH
- **120PGGS** BRUSHED FINISH
- **120PGGB** BLACK FINISH

POLARIS SOFT CLOSE HINGE

KDC - Approved Building Consent Document - BC210441 - Pg 459 of 512 - 30/08/2021 - ComplyNZ

120 SERIES POOL HINGE
GLASS TO WALL

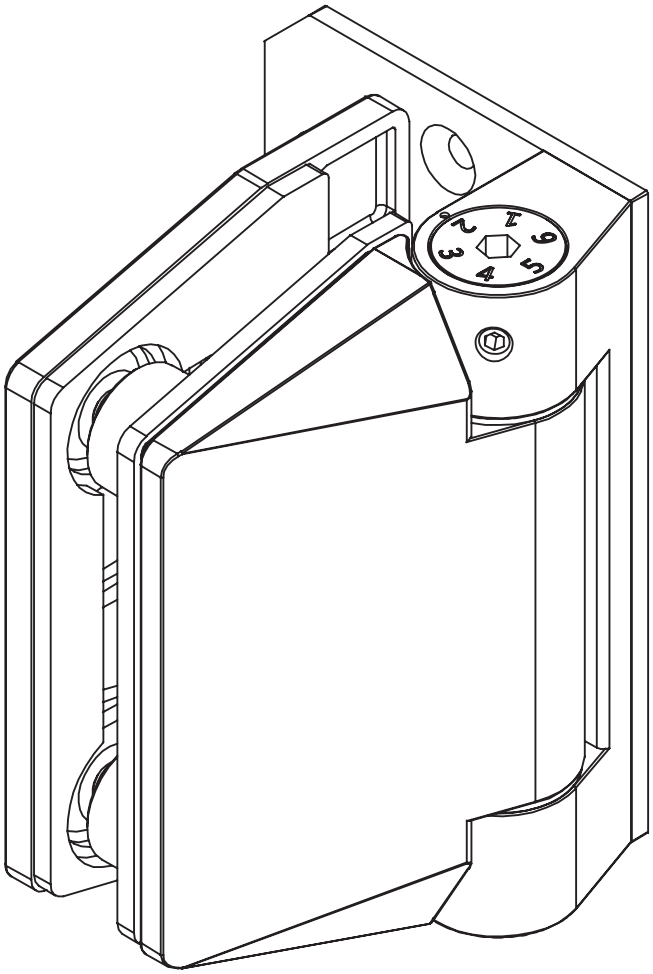

120 SERIES POOL HINGE

- SELF-CLOSING SAFETY HINGE FOR GLASS POOL FENCING
- TO BE USED WITH CHILD PROOF SAFETY LATCH
- COMPLIES WITH AUSTRALIAN STANDARDS FOR POOL GATE HARDWARE
- NATA ACCREDITED AND INDEPENDENTLY TESTED TO 10'000 CYCLES (NATA = NATIONAL ASSOCIATION OF TESTING AUTHORITIES AUSTRALIA)

FINISHES AND FUNCTIONS

- 2205 GRADE STAINLESS STEEL
- POLISHED STAINLESS
- BRUSHED STAINLESS
- MATT BLACK
- SINGLEACTION
- SOFTCLOSE
- NON-HOLD OPEN
- ANTI-FOOT-HOLD GASKET

10mm
12mm

MAX.
900mm WIDE x
1500mm HIGH

MAX 45kg

— 10°C
+ 50°C

90°

MODEL 120PGW

KDC - Approved Building Consent Document - BC210441 - Pg 460 of 512 - 30/08/2021 - ComplyNZ

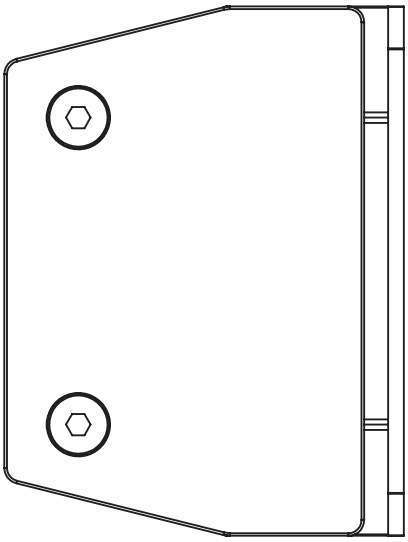

REAR VIEW

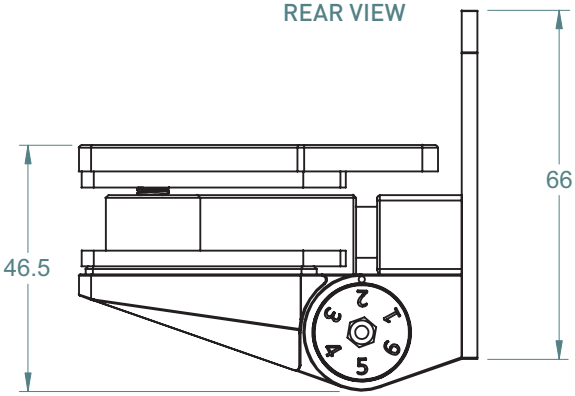

TOP VIEW

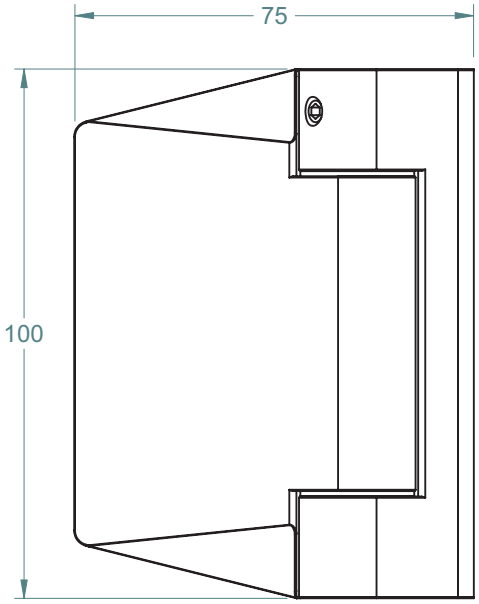

FRONT VIEW

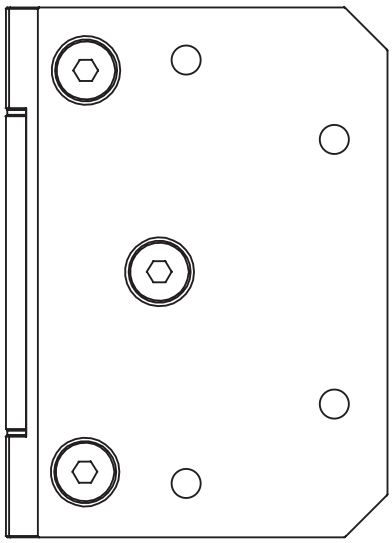

SIDE VIEW

TO ORDER SPECIFY:

- **120PGWP** POLISHED FINISH
- **120PGWS** BRUSHED FINISH
- **120PGQB** BLACK FINISH

SQUARE OR ROUND POST BRACKETS AVAILABLE

KDC - Approved Building Consent Document - BC210441 - Pg 461 of 512 - 30/08/2021 - ComplyNZ

120 SERIES POOL HINGE
GLASS TO POST BRACKETS

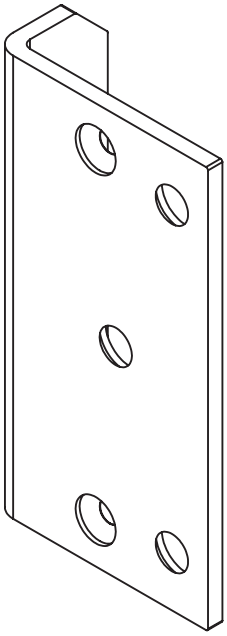

SQUARE POST BRACKET
(MODEL 120PSP)

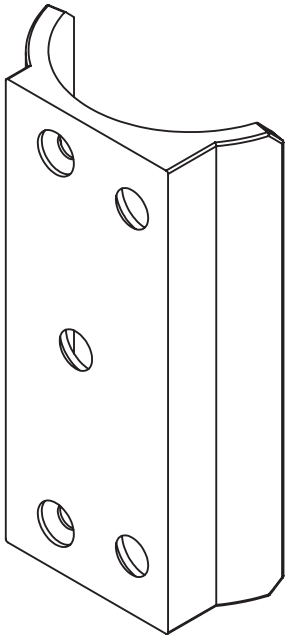

ROUND POST BRACKET
(MODEL 120PRP)

FINISHES AND FUNCTIONS

- 2205 GRADE STAINLESS STEEL
- POLISHED STAINLESS
- BRUSHED STAINLESS
- MATT BLACK

- DESIGNED TO FIT WITH GLASS TO WALL HINGE (MODEL 120PGW)

10mm
12mm

MAX.
900mm WIDE x
1500mm HIGH

MAX 45kg

— 10˚C
+ 50˚C

90˚

120 SERIES POOL HINGE

- SELF-CLOSING SAFETY HINGE FOR GLASS POOL FENCING
- TO BE USED WITH CHILD PROOF SAFETY LATCH
- COMPLIES WITH AUSTRALIAN STANDARDS FOR POOL GATE HARDWARE
- NATA ACCREDITED AND INDEPENDENTLY TESTED TO 10'000 CYCLES (NATA = NATIONAL ASSOCIATION OF TESTING AUTHORITIES AUSTRALIA)

MODEL 120PSP + 120PRP

KDC - Approved Building Consent Document - BC210441 - Pg 462 of 512 - 30/08/2021 - ComplyNZ

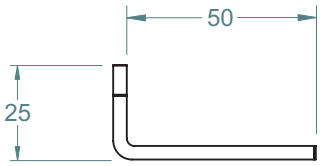

TOP VIEW

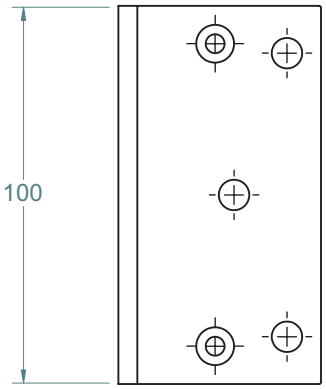

FRONT VIEW

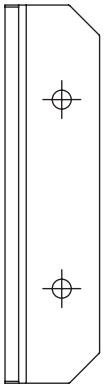

SIDE VIEW

SQUARE POST BRACKET

TO ORDER SPECIFY:

- **120PSPP** POLISHED FINISH
- **120PSPS** BRUSHED FINISH
- **120PSPB** BLACK FINISH

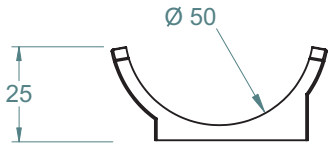

TOP VIEW

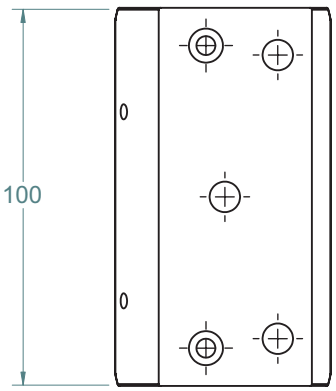

FRONT VIEW

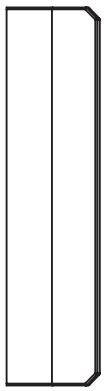

SIDE VIEW

ROUND POST BRACKET

TO ORDER SPECIFY:

- **120PRPP** POLISHED FINISH
- **120PRPS** BRUSHED FINISH
- **120PRPB** BLACK FINISH

KDC - Approved Building Consent Document - BC210441 - Pg 463 of 512 - 30/08/2021 - ComplyNZ

130 SERIES POOL HINGE
GLASS TO GLASS

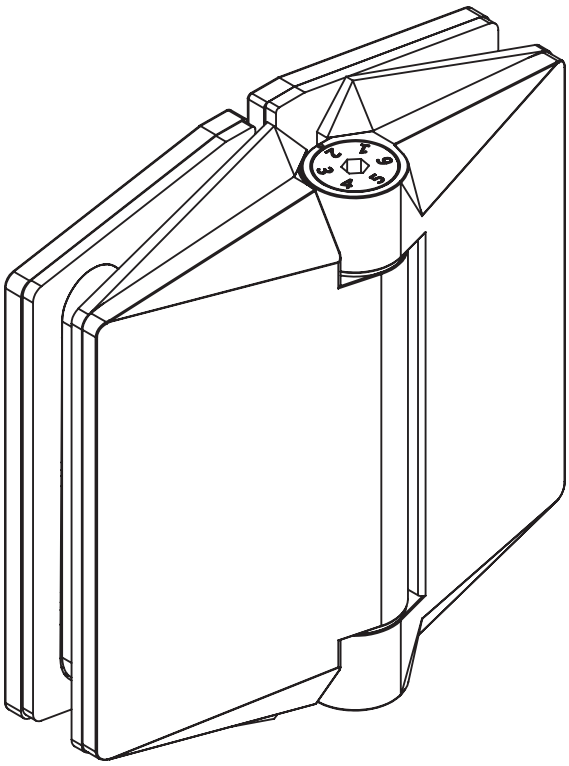

FINISHES AND FUNCTIONS

- 2205 GRADE STAINLESS STEEL
- POLISHED STAINLESS
- BRUSHED STAINLESS
- SINGLEACTION
- SOFTCLOSE
- NON-HOLD OPEN
- ANTI-FOOT-HOLD GASKET

10mm
12mm

MAX.
900mm WIDE x
1500mm HIGH

MAX 45kg

— 10˚C
+ 50˚C

90˚

130 SERIES POOL HINGE

- SELF-CLOSING SAFETY HINGE FOR GLASS POOL FENCING
- TO BE USED WITH CHILD PROOF SAFETY LATCH
- COMPLIES WITH AUSTRALIAN STANDARDS FOR POOL GATE HARDWARE
- NATA ACCREDITED AND INDEPENDENTLY TESTED TO 10'000 CYCLES (NATA = NATIONAL ASSOCIATION OF TESTING AUTHORITIES AUSTRALIA)

KDC - Approved Building Consent Document - BC210441 - Pg 464 of 512 - 30/08/2021 - ComplyNZ

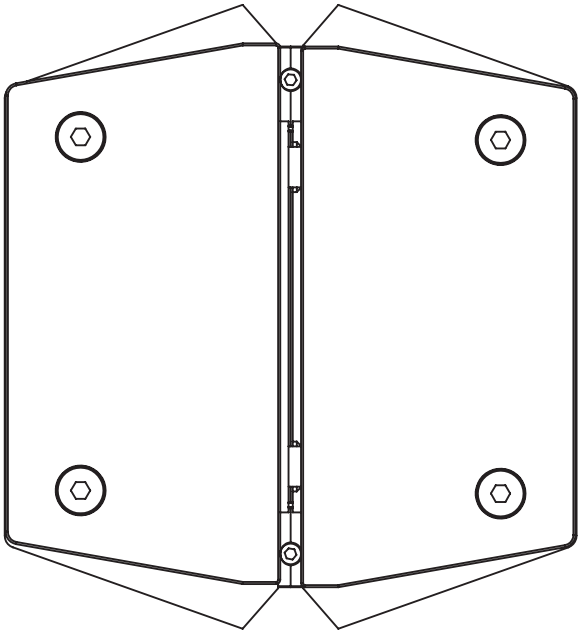

REAR VIEW

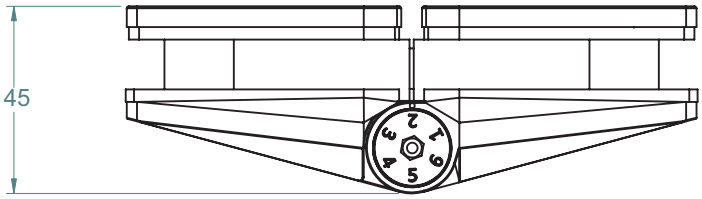

TOP VIEW

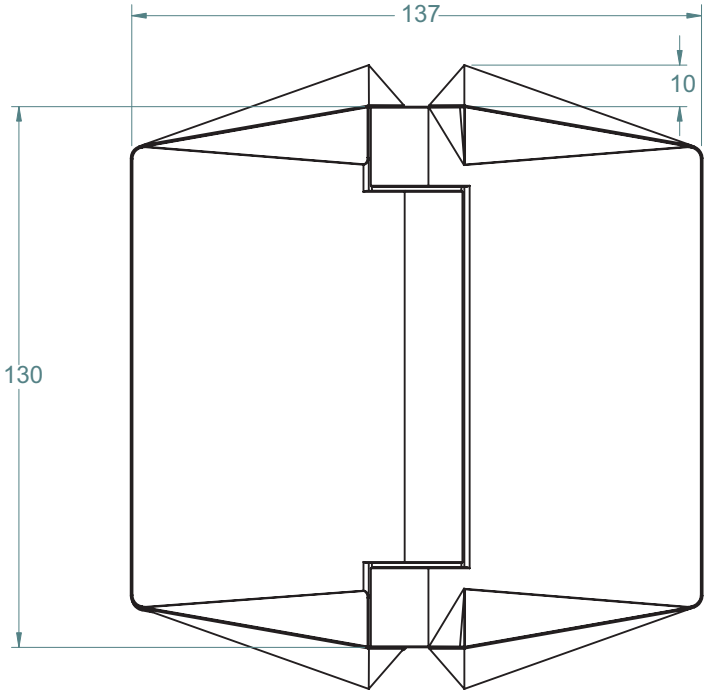

FRONT VIEW

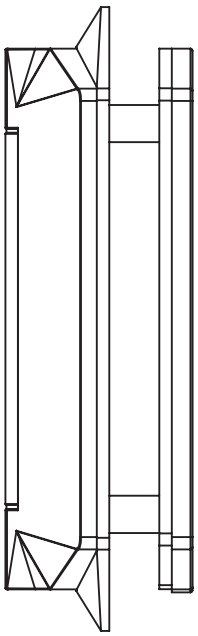

SIDE VIEW

TO ORDER SPECIFY:

- **130PGGP** POLISHED FINISH
- **130PGGS** BRUSHED FINISH

220 SERIES INTERNAL HINGE
GLASS TO GLASS

KDC - Approved Building Consent Document - BC210441 - Pg 465 of 512 - 30/08/2021 - ComplyNZ

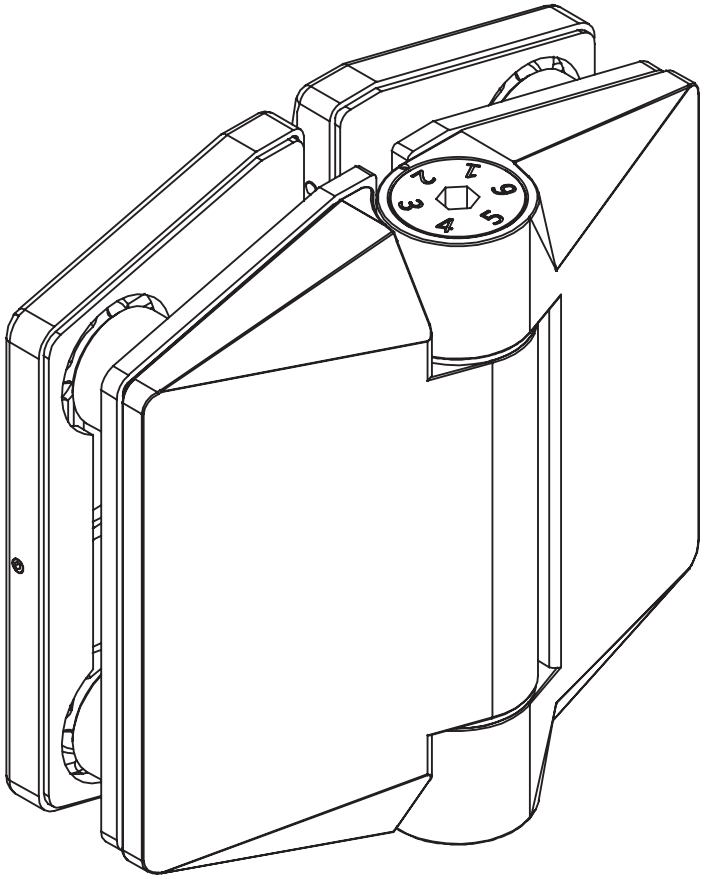

FINISHES AND FUNCTIONS

- 2205 GRADE STAINLESS STEEL
- POLISHED STAINLESS
- BRUSHED STAINLESS
- SINGLEACTION
- SOFTCLOSE
- NON-HOLD OPEN

10mm
12mm

MAX.
900mm WIDE

MAX

MAX 60kg

90°

CLOSING FORCE
OPEN 90° = 4Nm
CLOSED 0° = 2Nm

KDC - Approved Building Consent Document - BC210441 - Pg 466 of 512 - 30/08/2021 - ComplyNZ

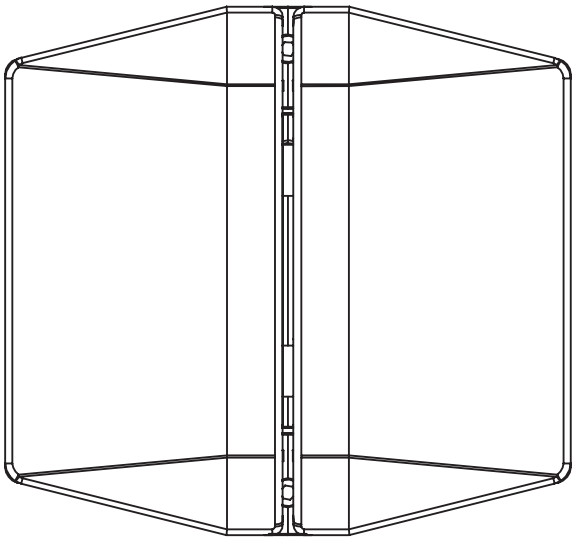

REAR VIEW

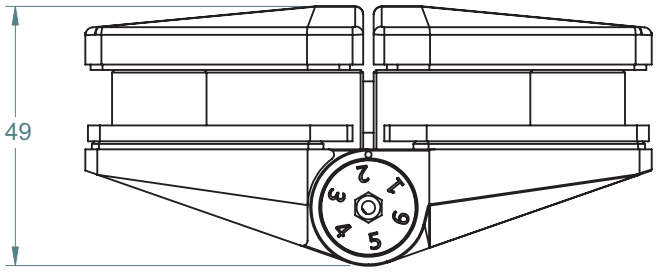

TOP VIEW

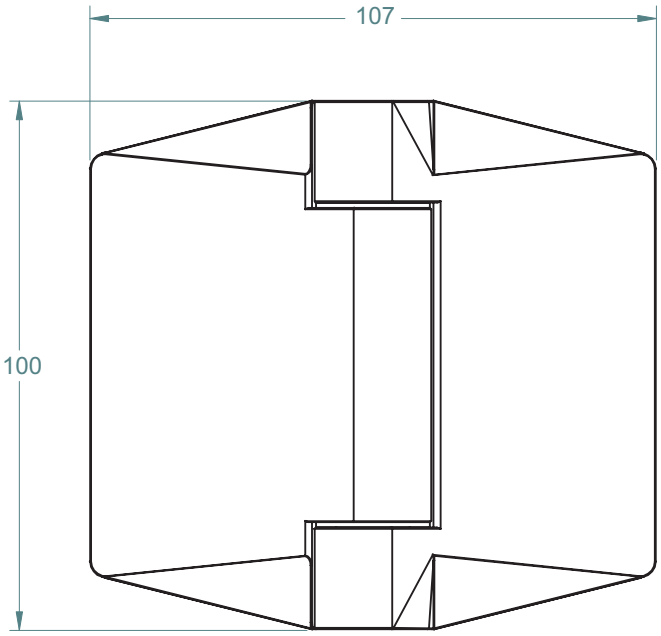

FRONT VIEW

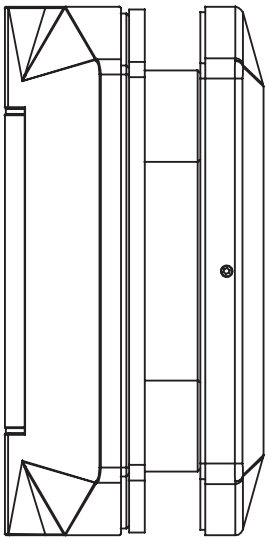

SIDE VIEW

TO ORDER SPECIFY:

- **220IGGP** POLISHED FINISH
- **220IGGS** BRUSHED FINISH

KDC - Approved Building Consent Document - BC210441 - Pg 467 of 512 - 30/08/2021 - ComplyNZ

220 SERIES INTERNAL HINGE
GLASS TO WALL

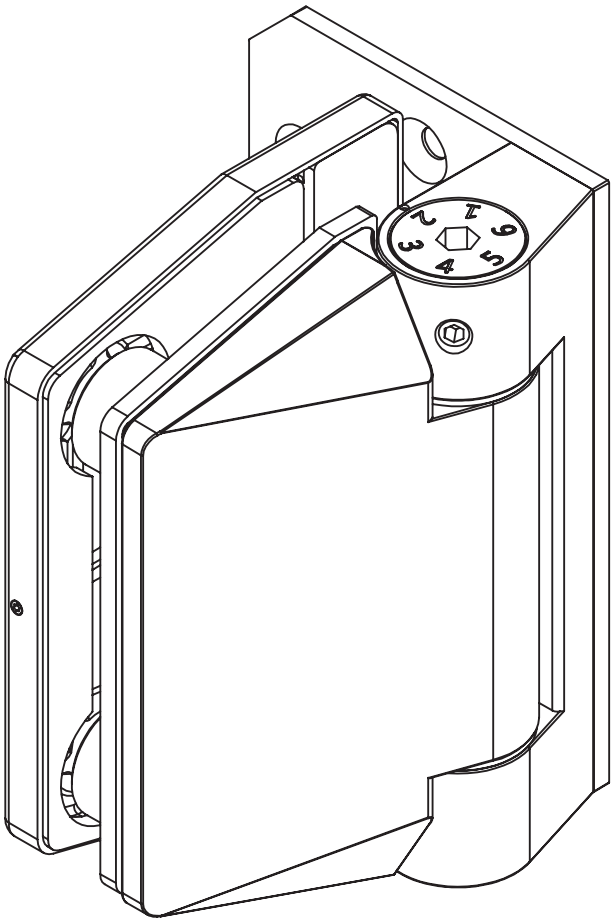

FINISHES AND FUNCTIONS

- 2205 GRADE STAINLESS STEEL
- POLISHED STAINLESS
- BRUSHED STAINLESS
- SINGLEACTION
- SOFTCLOSE
- NON-HOLD OPEN

10mm
12mm

MAX.
900mm WIDE

MAX 60kg

90°

CLOSING FORCE
OPEN 90° = 4Nm
CLOSED 0° = 2Nm

KDC - Approved Building Consent Document - BC210441 - Pg 468 of 512 - 30/08/2021 - ComplyNZ

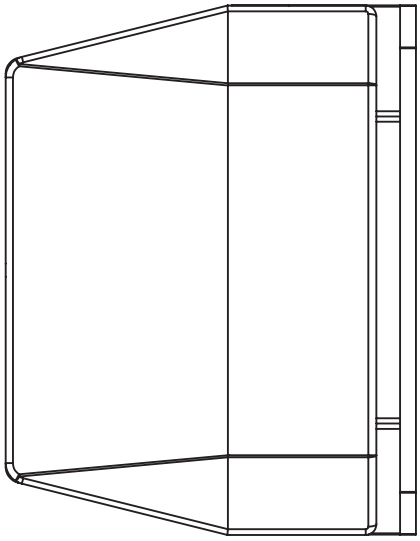

REAR VIEW

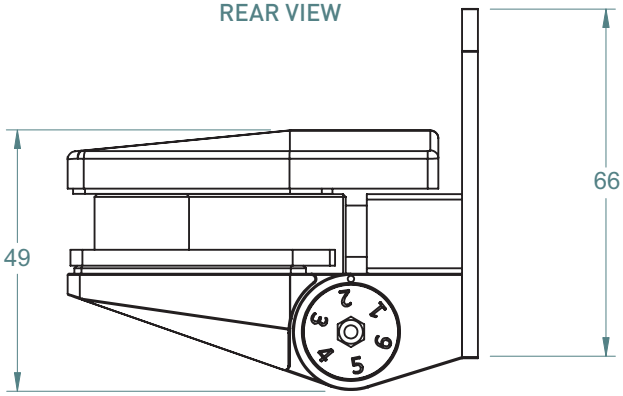

TOP VIEW

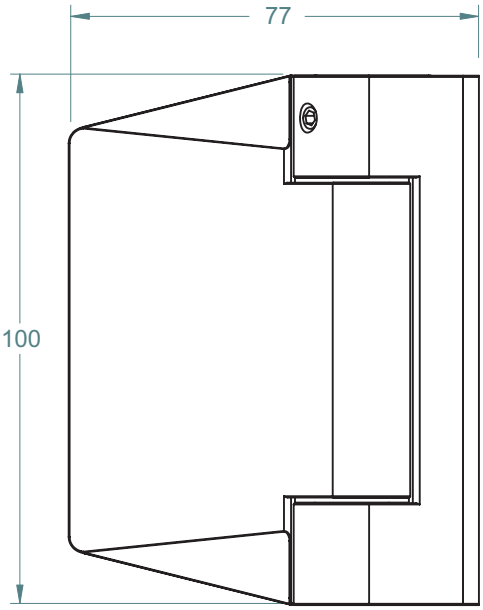

FRONT VIEW

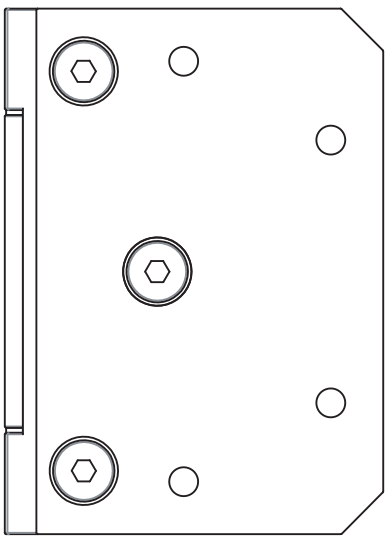

SIDE VIEW

TO ORDER SPECIFY:

- **220IGWP** POLISHED FINISH
- **220IGWS** BRUSHED FINISH

KDC - Approved Building Consent Document - BC210441 - Pg 469 of 512 - 30/08/2021 - ComplyNZ

220 SERIES INTERNAL HINGE
GLASS TO DOOR JAMB

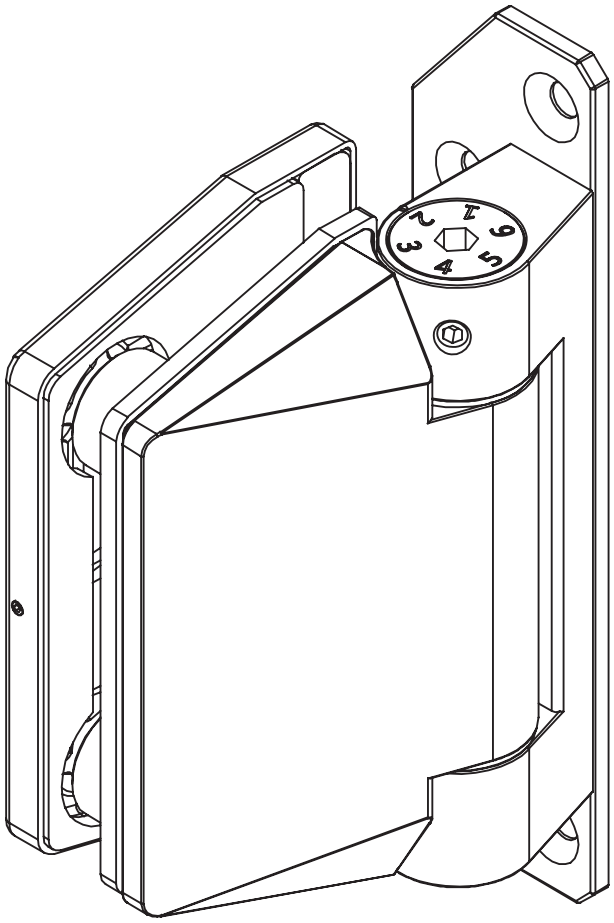

FINISHES AND FUNCTIONS

- 2205 GRADE STAINLESS STEEL
- POLISHED STAINLESS
- BRUSHED STAINLESS
- SINGLEACTION
- SOFTCLOSE
- NON-HOLD OPEN

10mm
12mm

MAX.
900mm WIDE

MAX

MAX 60kg

90°

CLOSING FORCE
OPEN 90° = 4Nm
CLOSED 0° = 2Nm

KDC - Approved Building Consent Document - BC210441 - Pg 470 of 512 - 30/08/2021 - ComplyNZ

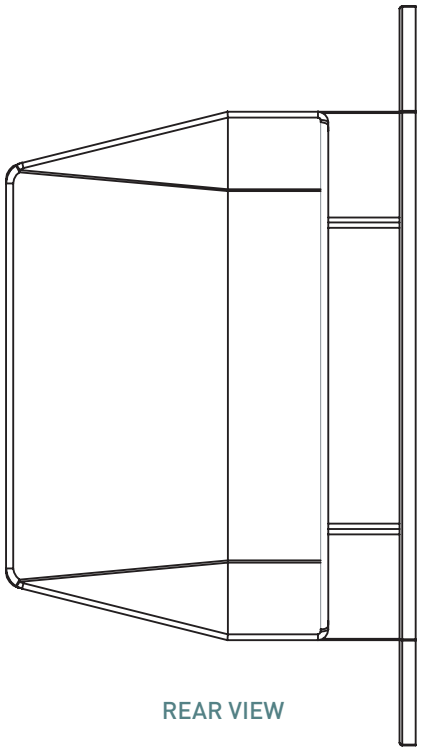

REAR VIEW

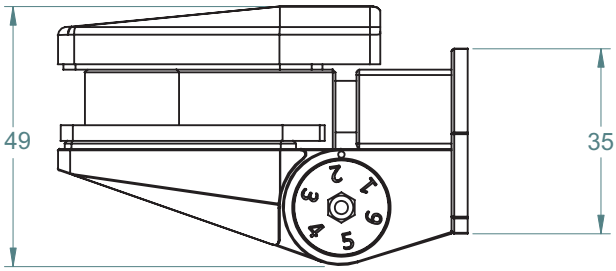

TOP VIEW

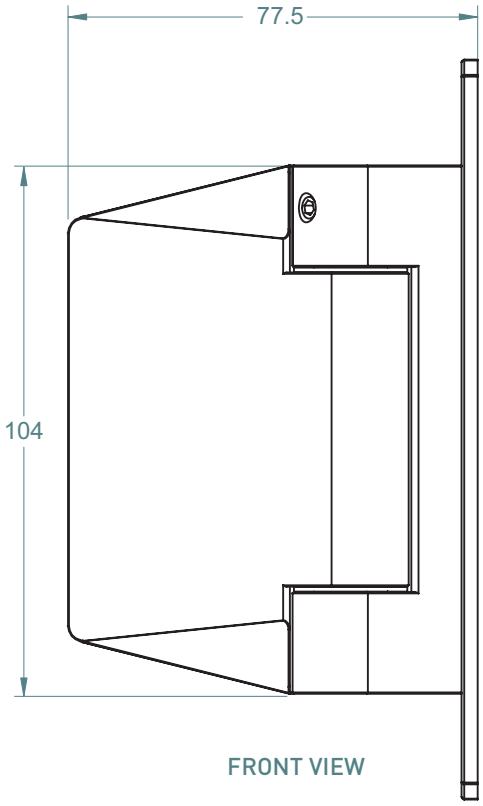

FRONT VIEW

TO ORDER SPECIFY:

- **220IGJP** POLISHED FINISH
- **220IGJS** BRUSHED FINISH

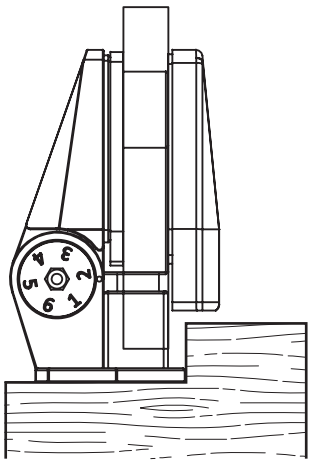

DOOR JAMB ILLUSTRATION

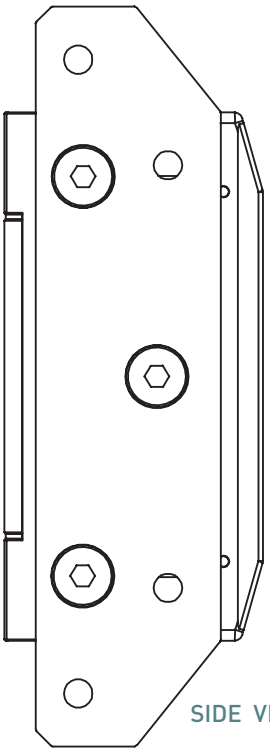

SIDE VIEW

320 SERIES SHOWER HINGE
GLASS TO GLASS

KDC - Approved Building Consent Document - BC210441 - Pg 471 of 512 - 30/08/2021 - ComplyNZ

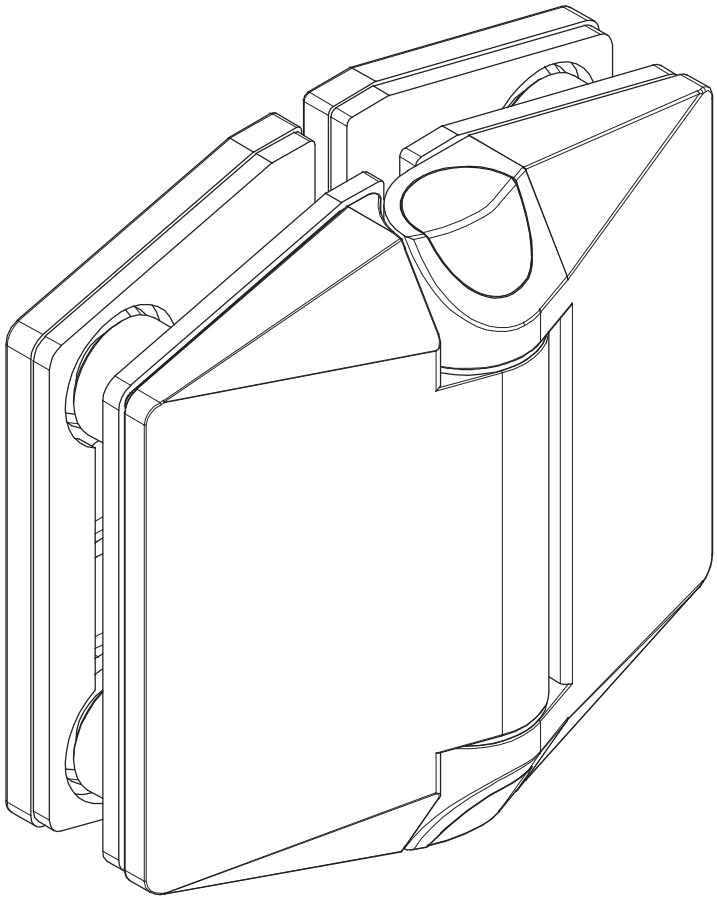

FINISHES AND FUNCTIONS

- SOLID BRASS
- POLISHED CHROME
- BRUSHED SATIN CHROME
- MATT BLACK
- SINGLE ACTION
- SOFT CLOSE
- NON-HOLD OPEN



10mm
12mm



MAX.
800mm WIDE



MAX 45kg



90°

KDC - Approved Building Consent Document - BC210441 - Pg 472 of 512 - 30/08/2021 - ComplyNZ

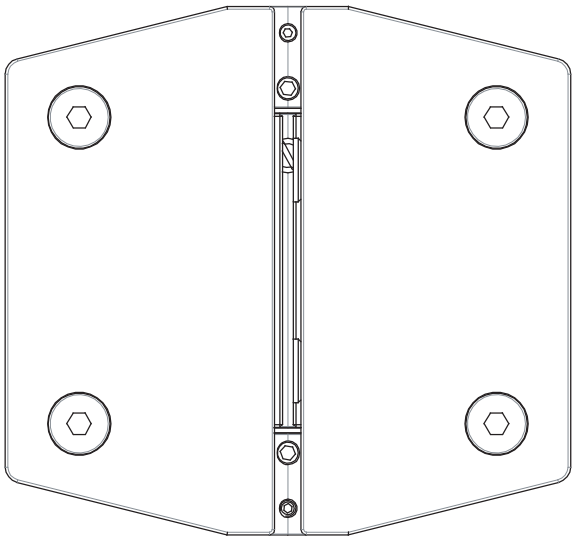

REAR VIEW

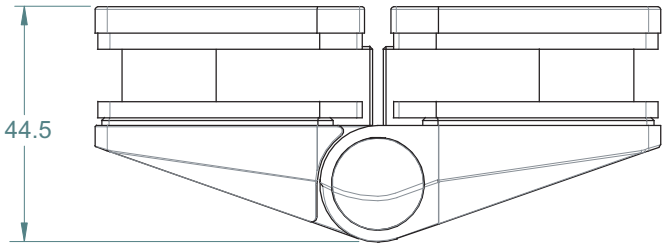

TOP VIEW

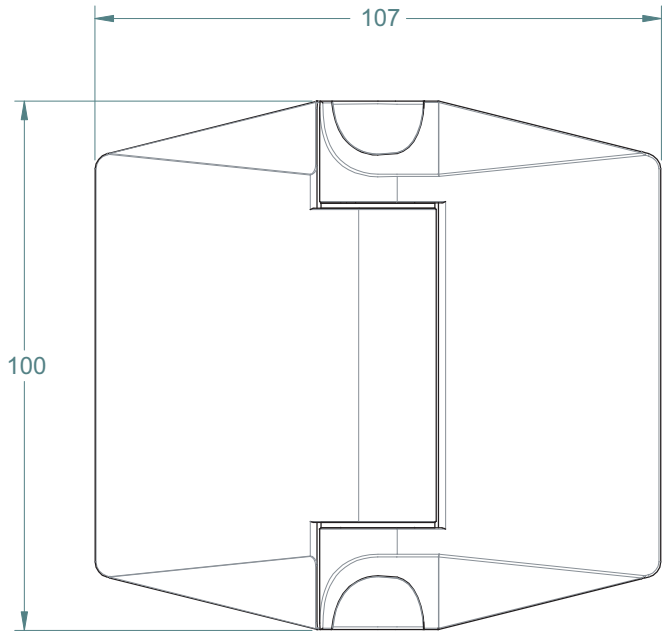

FRONT VIEW

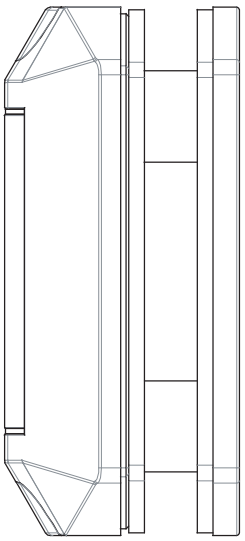

SIDE VIEW

TO ORDER SPECIFY:

- **320SGGP** POLISHED FINISH
- **320SGGS** BRUSHED FINISH
- **320SGGB** BLACK FINISH

POLARIS SOFT CLOSE HINGE

320 SERIES SHOWER HINGE
GLASS TO WALL

KDC - Approved Building Consent Document - BC210441 - Pg 473 of 512 - 30/08/2021 - ComplyNZ

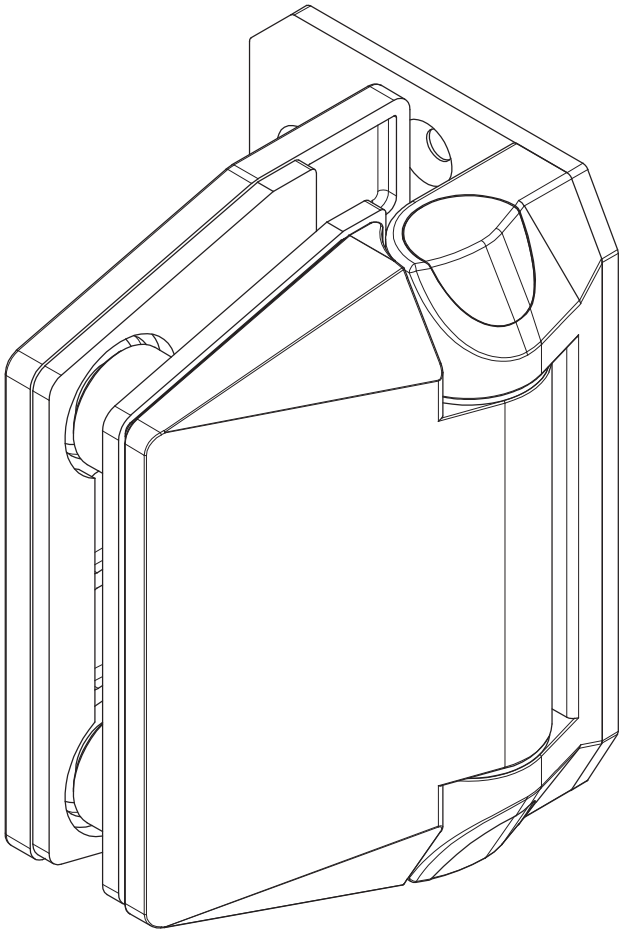

FINISHES AND FUNCTIONS

- SOLID BRASS
- POLISHED CHROME
- BRUSHED SATIN CHROME
- MATT BLACK
- SINGLE ACTION
- SOFT CLOSE
- NON-HOLD OPEN



10mm
12mm



MAX.
800mm WIDE



MAX 45kg



90°

KDC - Approved Building Consent Document - BC210441 - Pg 474 of 512 - 30/08/2021 - ComplyNZ

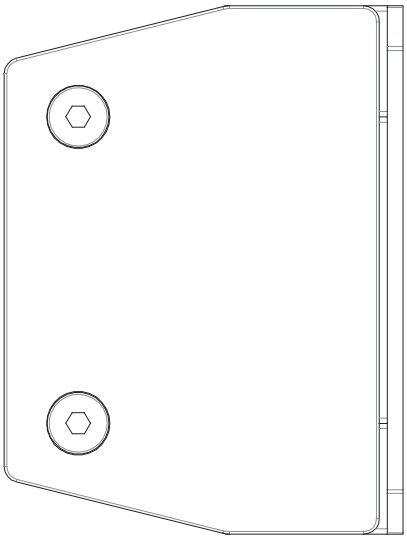

REAR VIEW

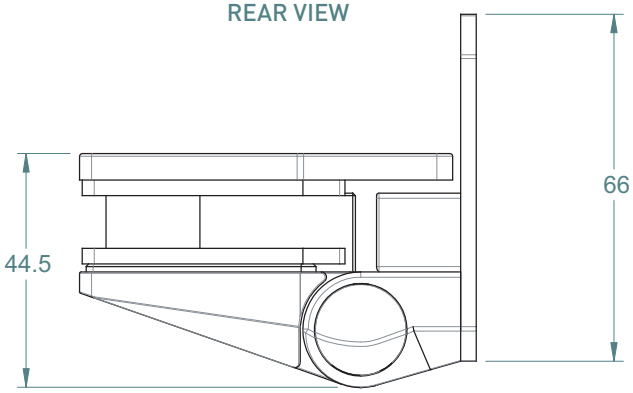

TOP VIEW

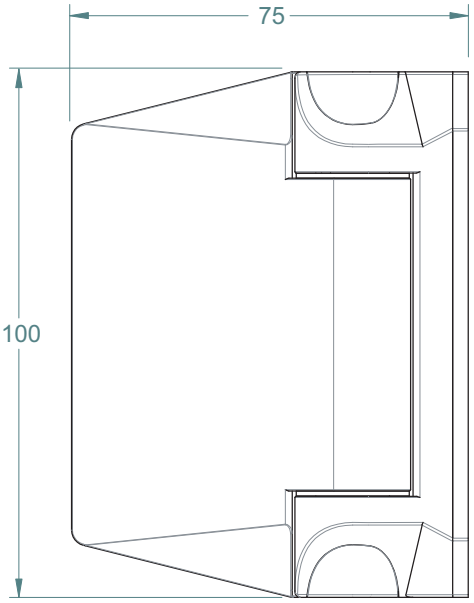

FRONT VIEW

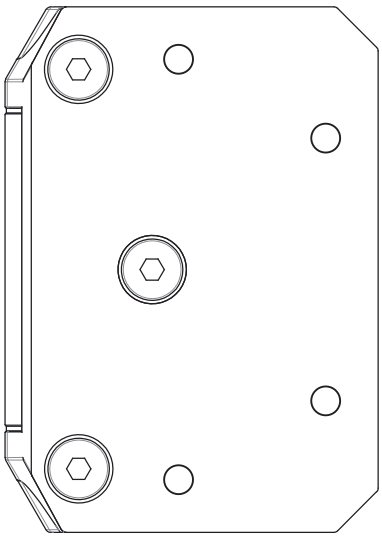

SIDE VIEW

TO ORDER SPECIFY:

- **320SGWP** POLISHED FINISH
- **320SGWS** BRUSHED FINISH
- **320SGWB** BLACK FINISH

POLARIS SOFT CLOSE HINGE

LATCH FOR GLASS FENCE
GLASS TO GLASS 90°

KDC - Approved Building Consent Document - BC210441 - Pg 475 of 512 - 30/08/2021 - ComplyNZ

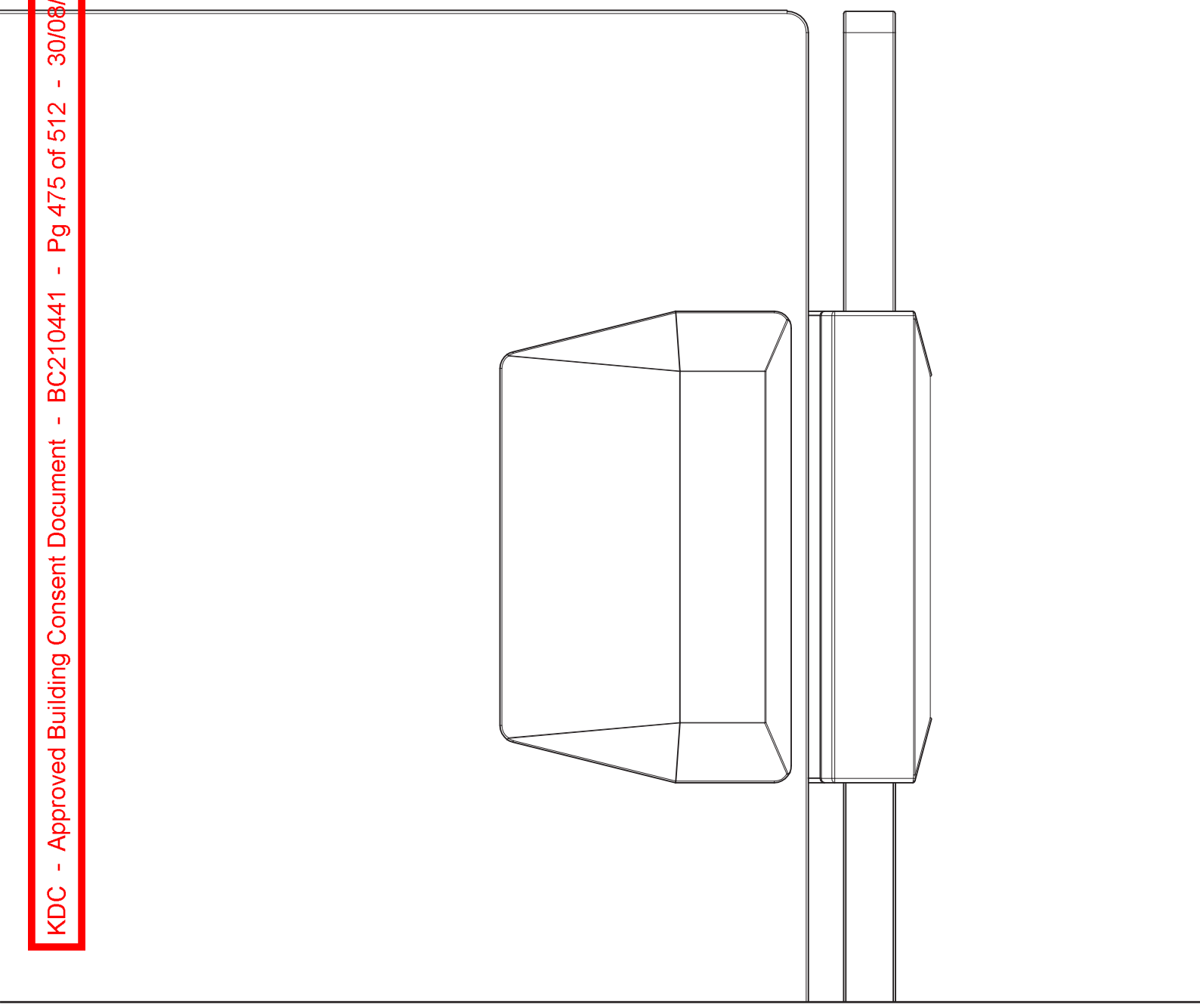

LATCH GLASS TO GLASS 90°

KDC - Approved Building Consent Document - BC210441 - Pg 476 of 512 - 30/08/2021 - ComplyNZ

TO ORDER SPECIFY:

- **LA2GG90P** POLISHED FINISH
- **LA2GG90S** BRUSHED FINISH
- **LA2GG90B** BLACK FINISH

*MAGNALOCK NOT INCLUDED

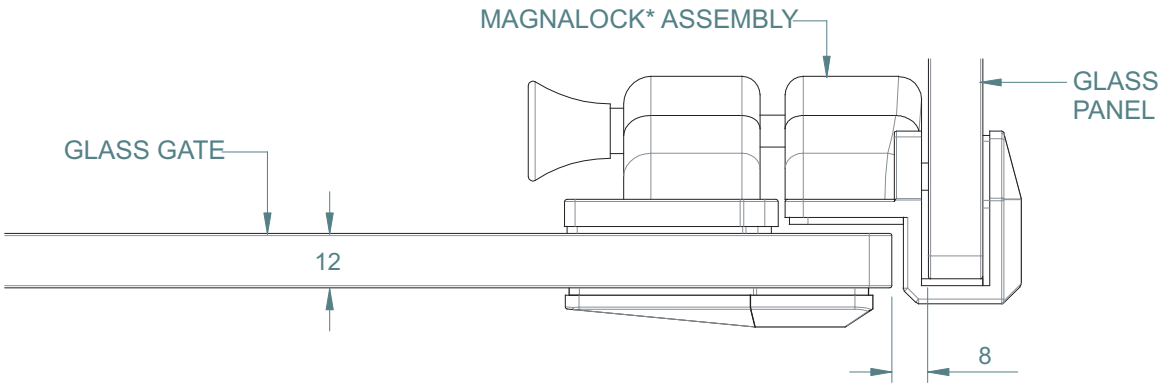

TOP VIEW

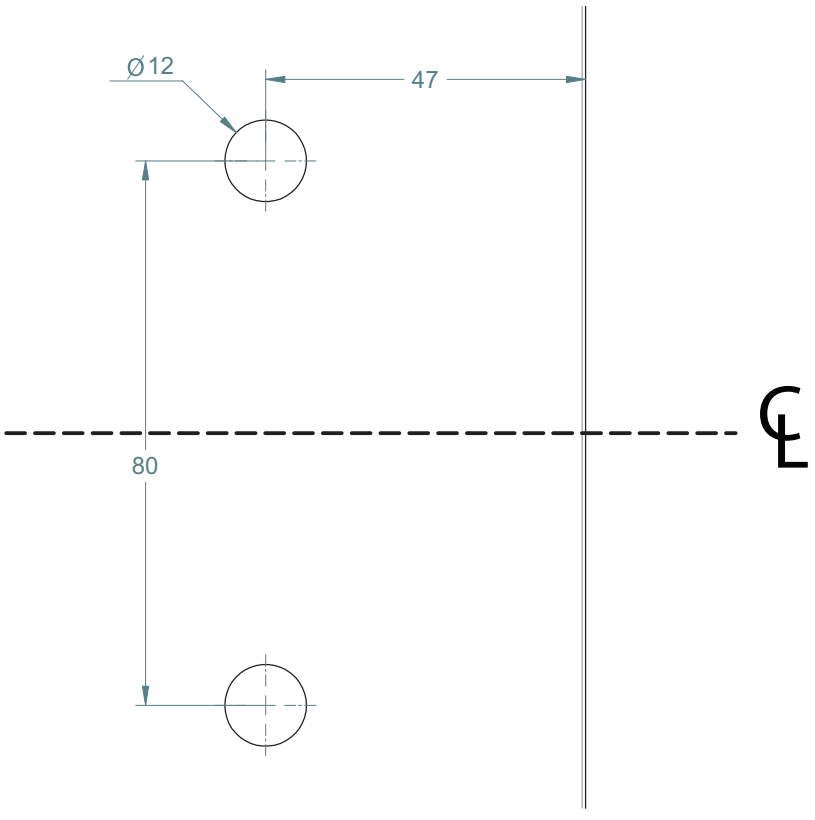

GLASS GATE HOLES

LATCH FOR GLASS FENCE
GLASS TO GLASS REVERSE 90°

KDC - Approved Building Consent Document - BC210441 - Pg 477 of 512 - 30/08/2021 - ComplyNZ

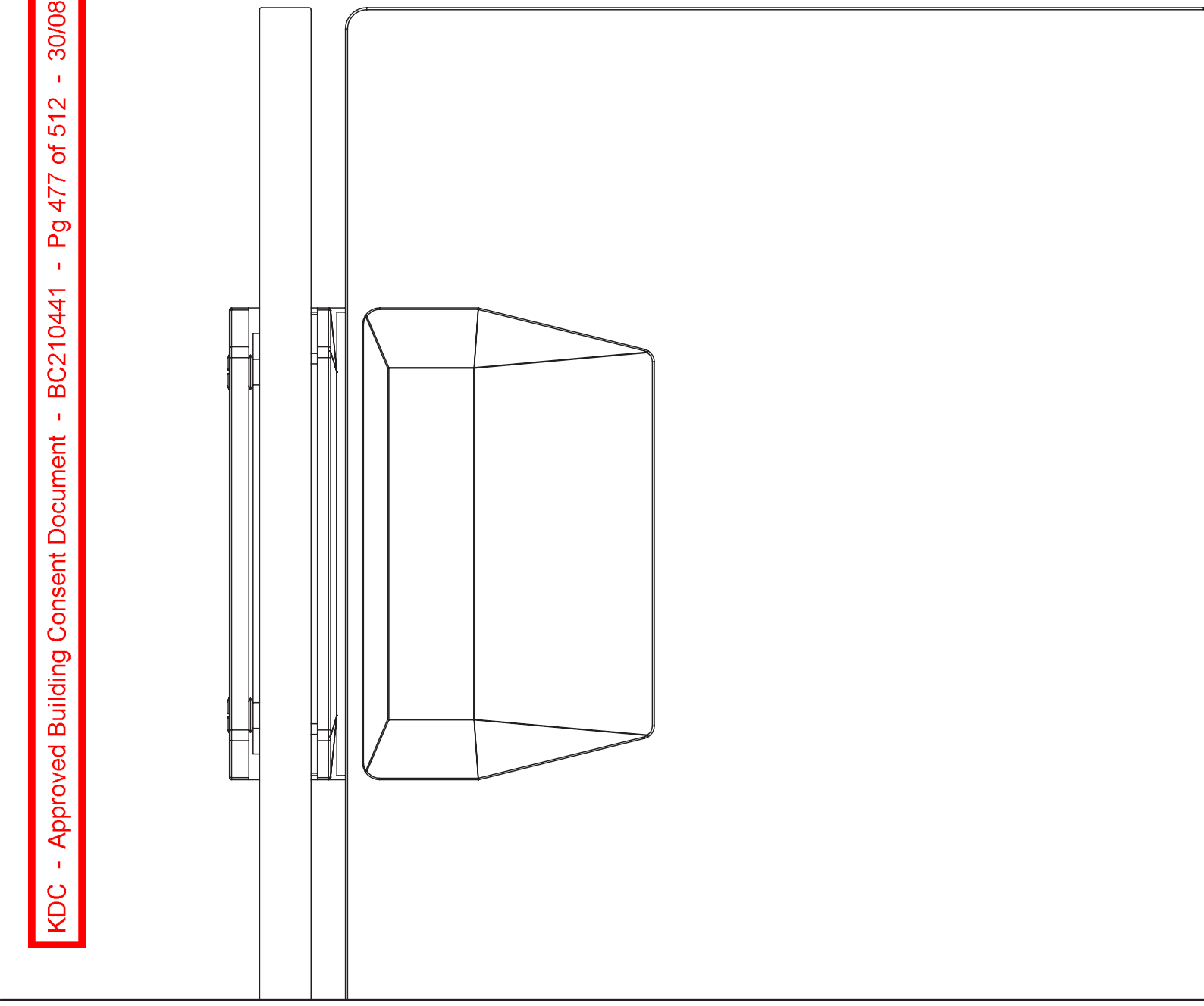

LATCH GLASS TO GLASS REVERSE 90°

KDC - Approved Building Consent Document - BC210441 - Pg 478 of 512 - 30/08/2021 - ComplyNZ

TO ORDER SPECIFY:

- **LA2GGR90P** POLISHED FINISH
- **LA2GGR90S** BRUSHED FINISH
- **LA2GGR90B** BLACK FINISH

*MAGNALOCK NOT INCLUDED

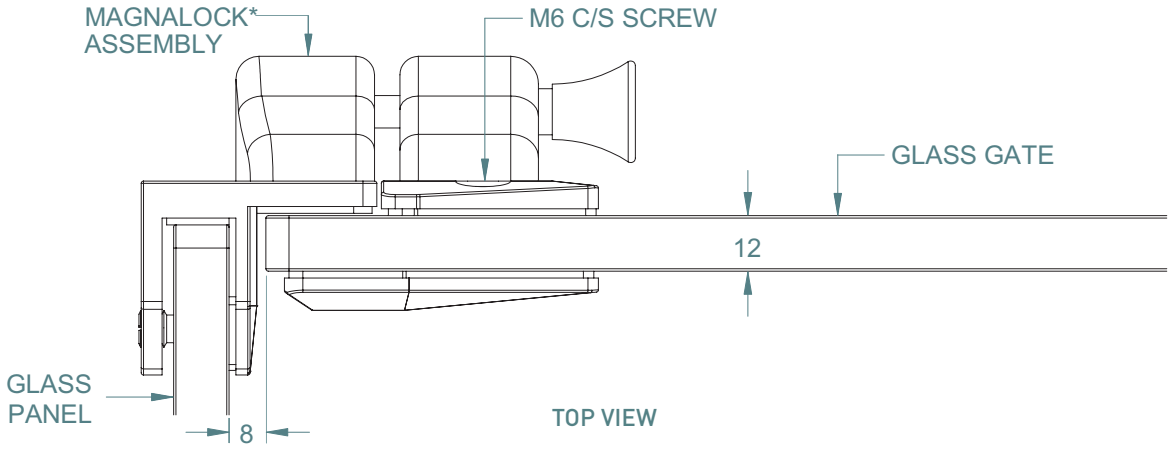

TOP VIEW

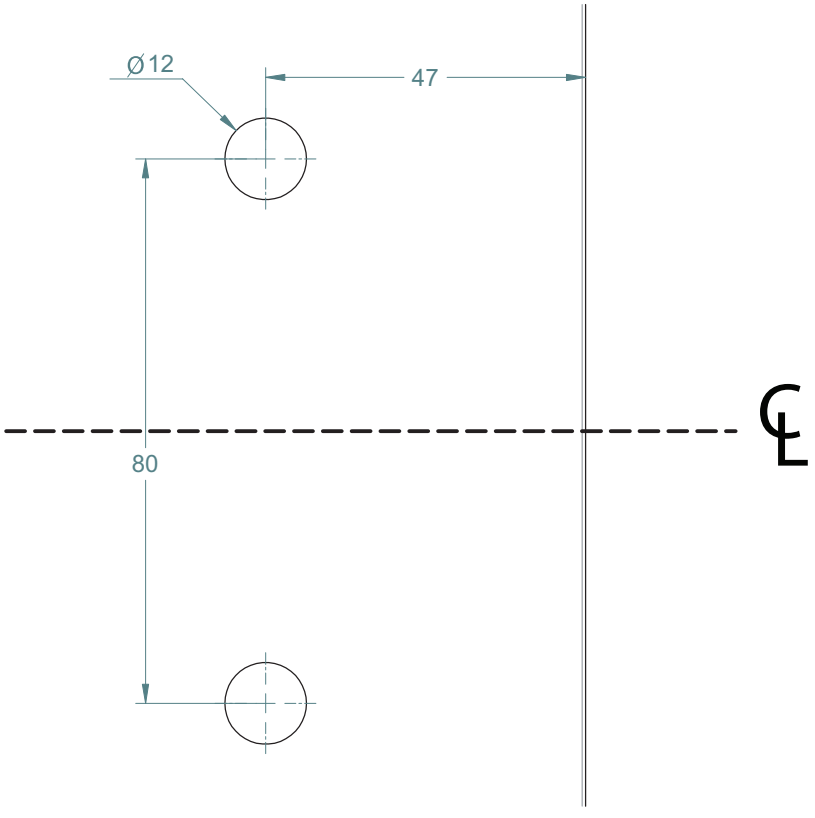

GLASS GATE HOLES

LATCH FOR GLASS FENCE
GLASS TO GLASS 180°

KDC - Approved Building Consent Document - BC210441 - Pg 479 of 512 - 30/08/2021 - ComplyNZ

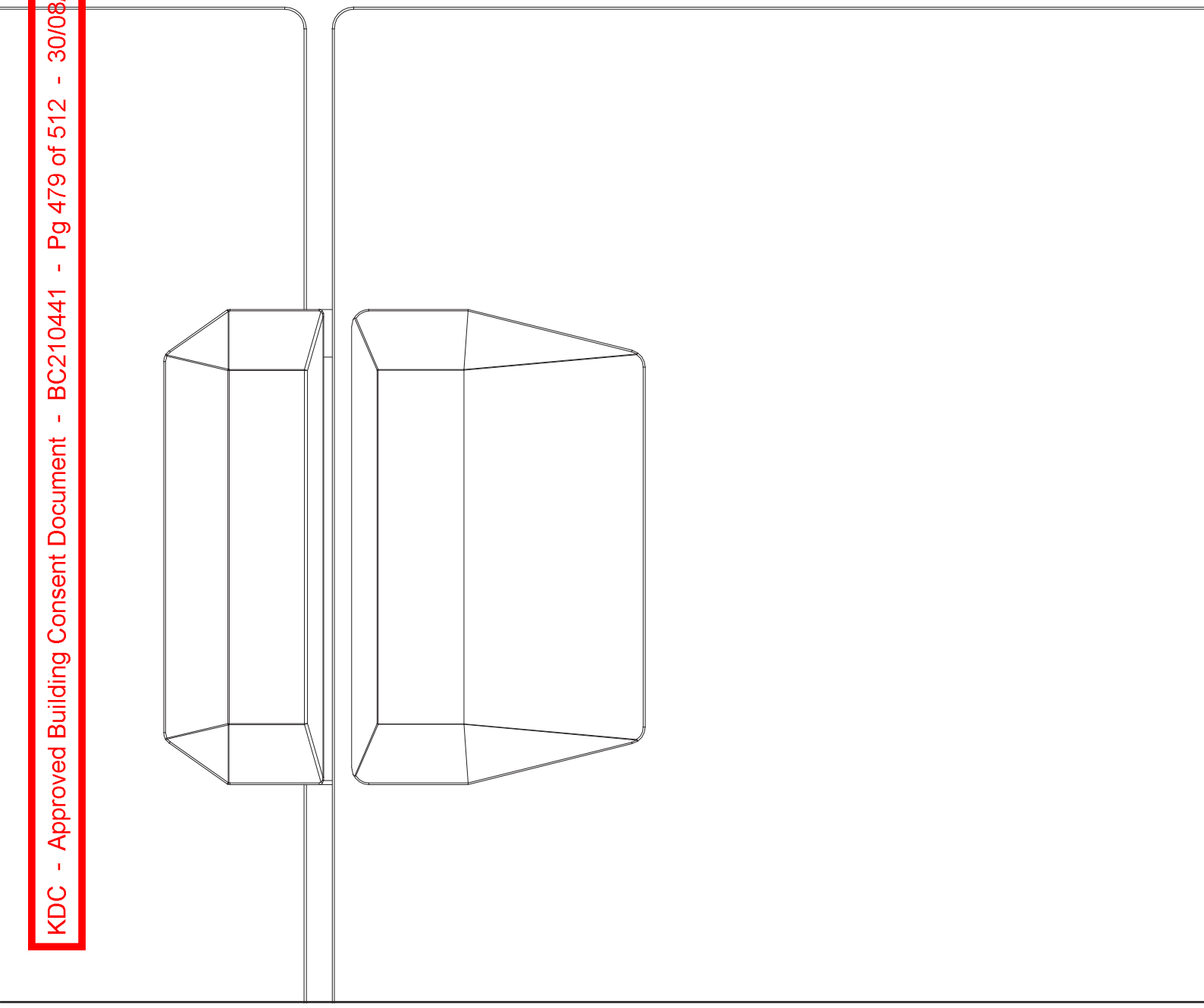

LATCH GLASS TO GLASS 180°

KDC - Approved Building Consent Document - BC210441 - Pg 480 of 512 - 30/08/2021 - ComplyNZ

TO ORDER SPECIFY:

- **LA2GG180P** POLISHED FINISH
- **LA2GG180S** BRUSHED FINISH
- **LA2GG180B** BLACK FINISH

*MAGNALOCK NOT INCLUDED

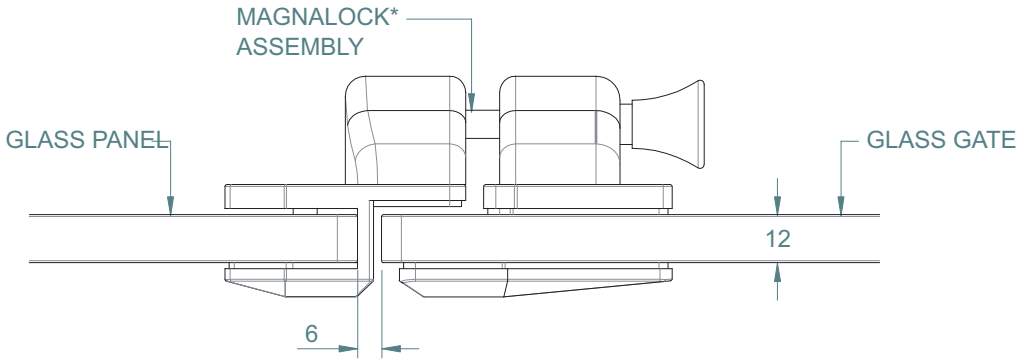

TOP VIEW

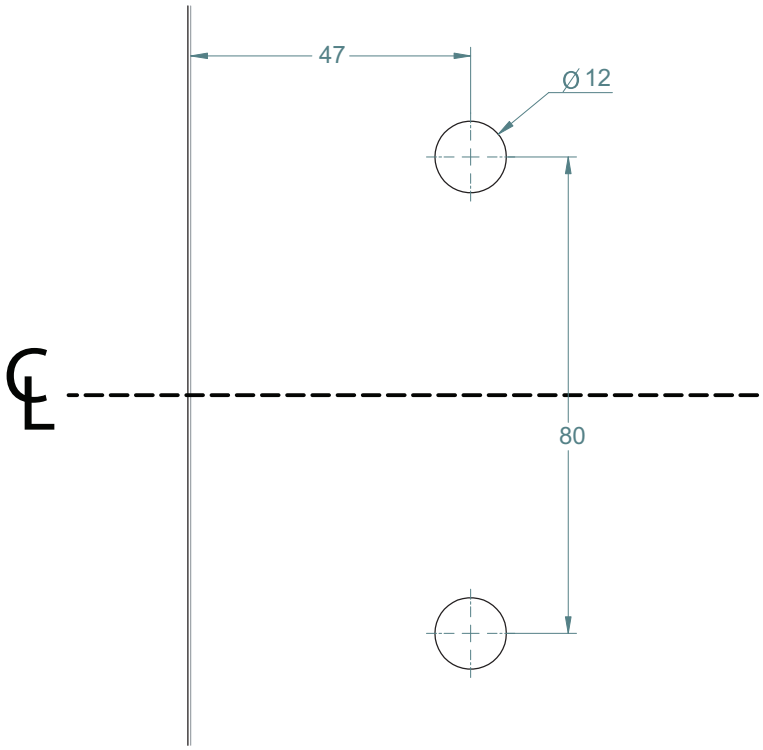

GLASS GATE HOLES

LATCH FOR GLASS FENCE
GLASS TO WALL/POST

KDC - Approved Building Consent Document - BC210441 - Pg 481 of 512 - 30/08/2021 - ComplyNZ

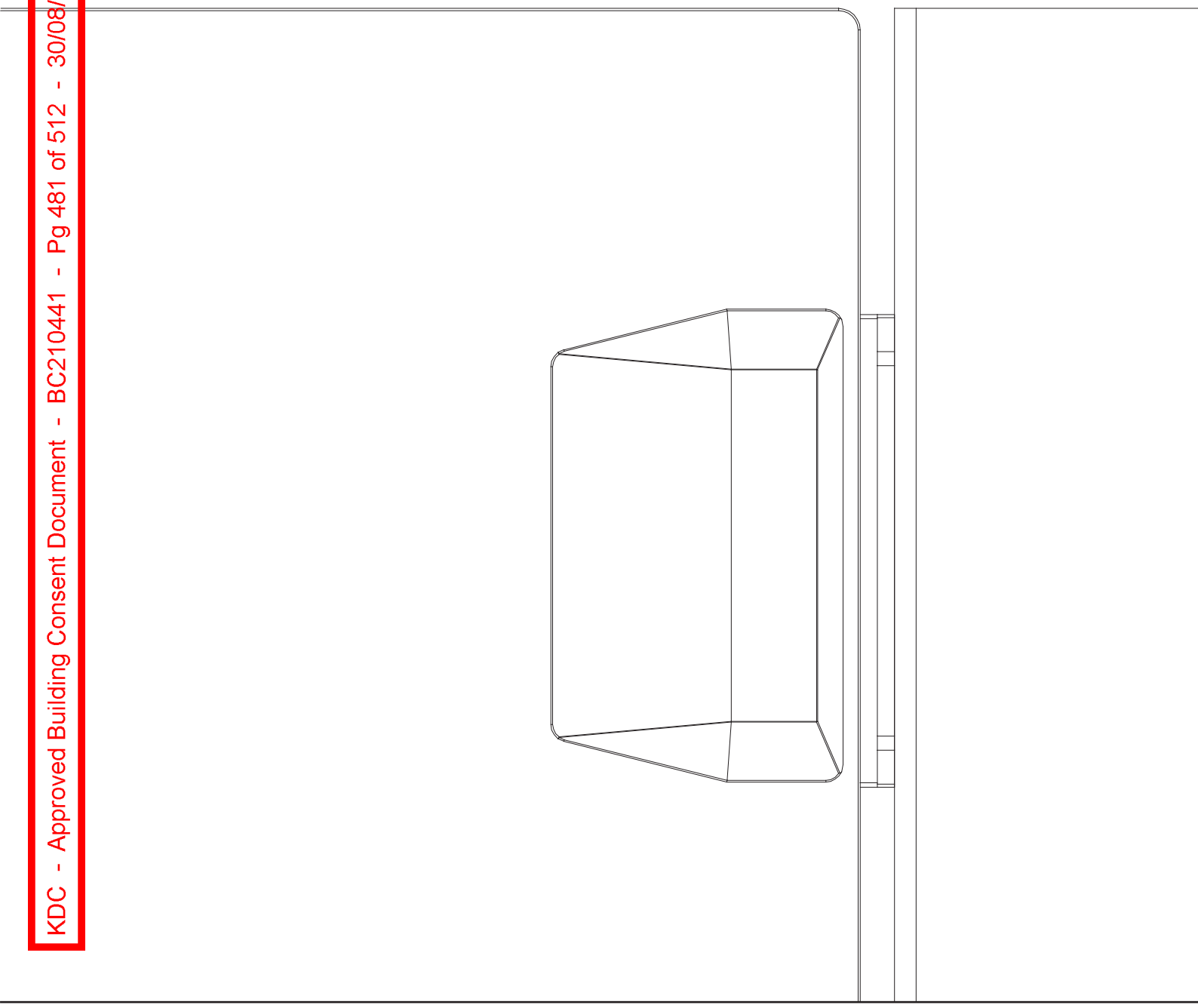

LATCH GLASS TO WALL/POST

KDC - Approved Building Consent Document - BC210441 - Pg 482 of 512 - 30/08/2021 - ComplyNZ

TO ORDER SPECIFY:

- **LA2GWP** POLISHED FINISH
- **LA2GWS** BRUSHED FINISH
- **LA2GWB** BLACK FINISH

*MAGNALOCK NOT INCLUDED

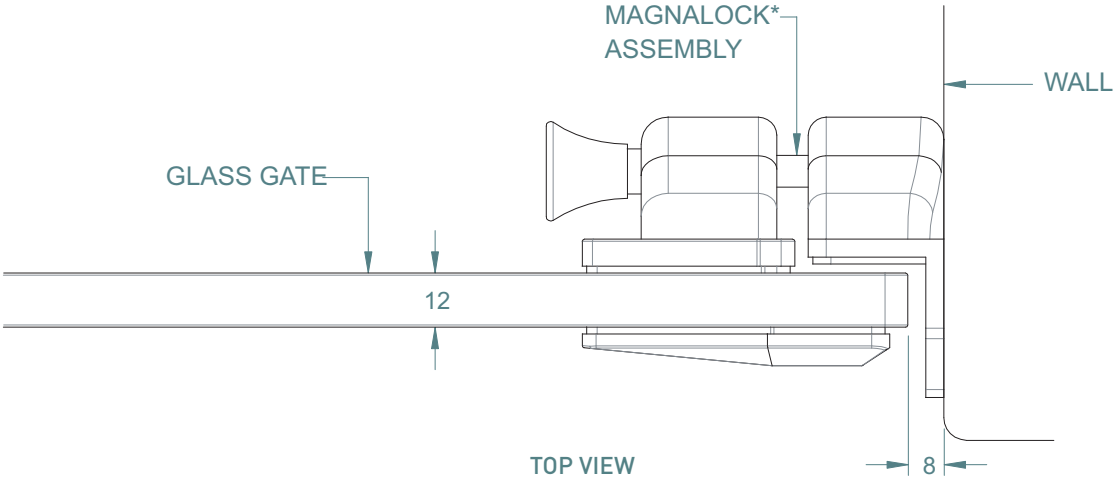

TOP VIEW

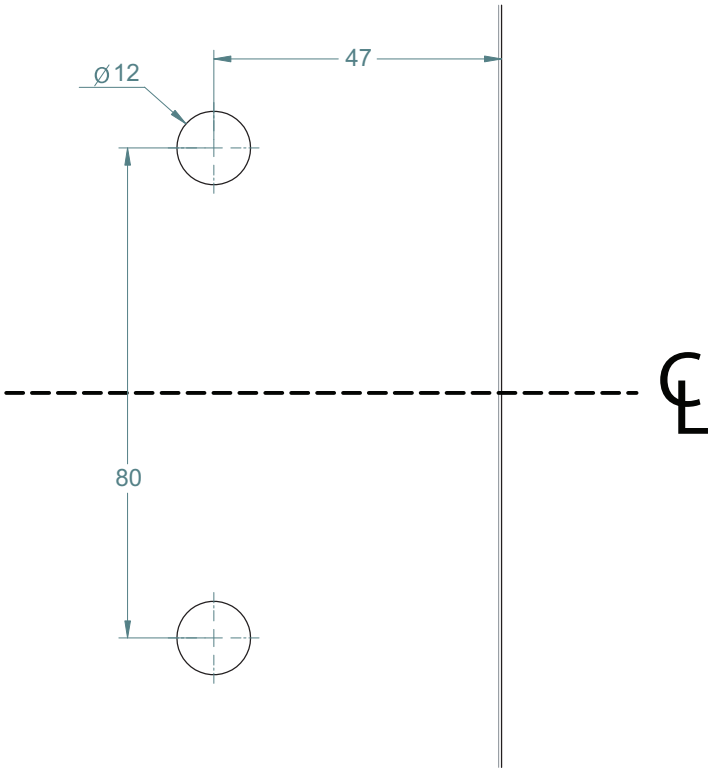

GLASS GATE HOLES

MAGNALOCK ASSEMBLY
FOR ALL GLASS LATCHES

KDC - Approved Building Consent Document - BC210441 - Pg 483 of 512 - 30/08/2021 - ComplyNZ

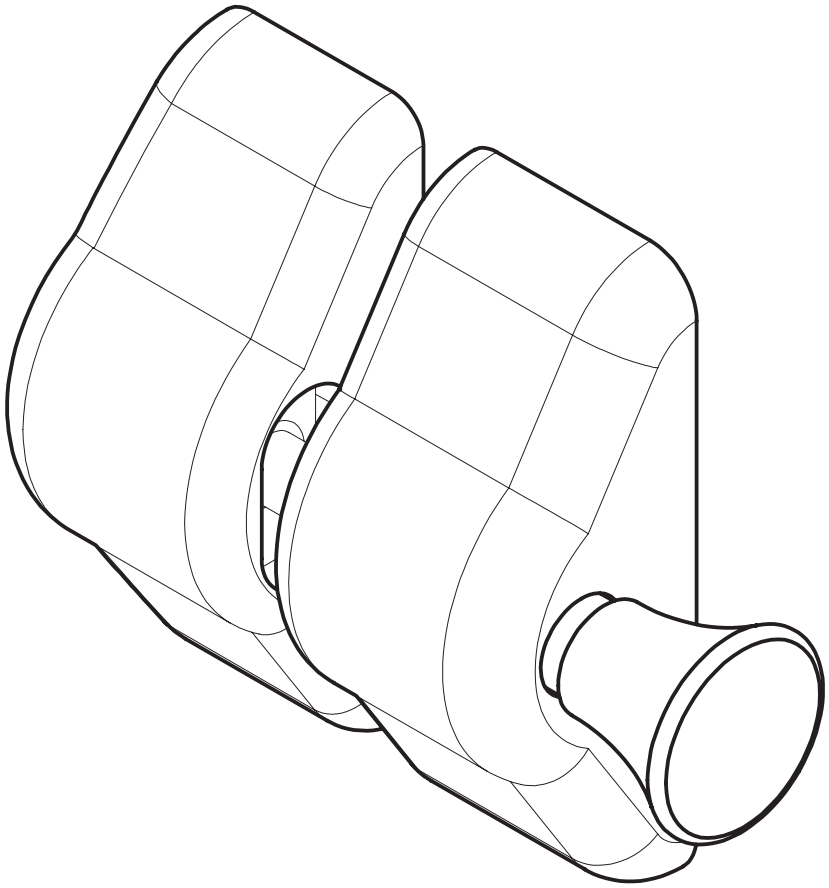

MAGNALOCK FOR LATCHES

KDC - Approved Building Consent Document - BC210441 - Pg 484 of 512 - 30/08/2021 - ComplyNZ

TO ORDER SPECIFY:

- **XXXXX** BLACK ONLY

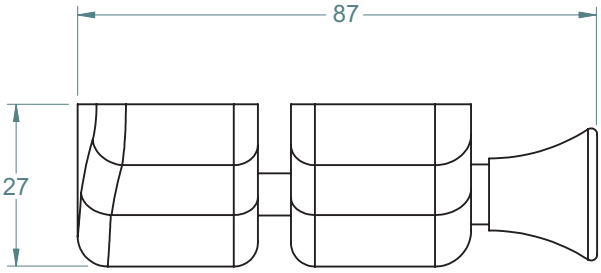

TOP VIEW

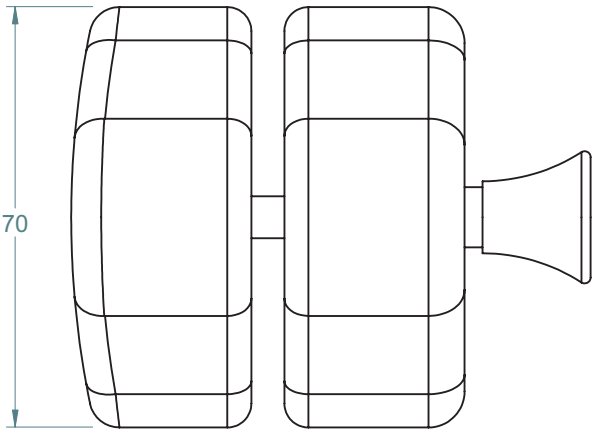

FRONT VIEW

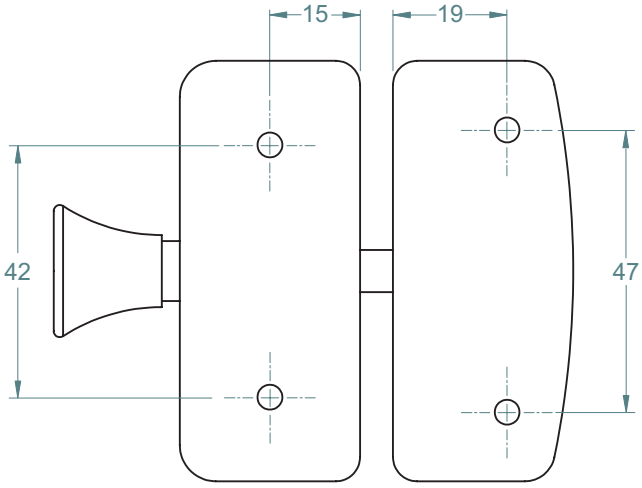

MOUNTING FACES

KDC - Approved Building Consent Document - BC210441 - Pg 485 of 512 - 30/08/2021 - ComplyNZ

DOOR/GATE STOPPERS
VARIOUS APPLICATIONS

GLASS TO GLASS 90° STOPPER LEFT LEG (MODEL DSGG90L)

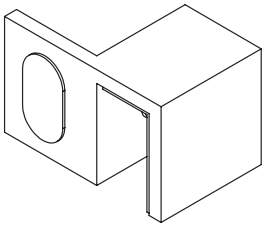

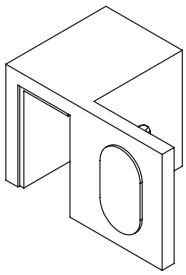

GLASS TO GLASS 90° STOPPER RIGHT LEG (MODEL DSGG90R)

GLASS TO GLASS 180° STOPPER LEFT LEG (MODEL DSGG180L)

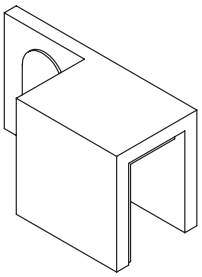

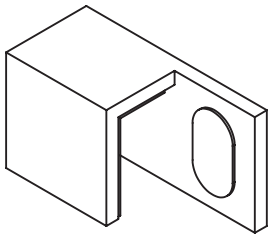

GLASS TO GLASS 180° STOPPER RIGHT LEG (MODEL DSGG180R)

GLASS TO WALL STOPPER (MODEL DSGW)

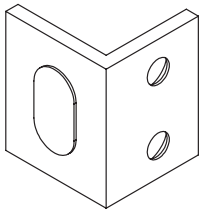

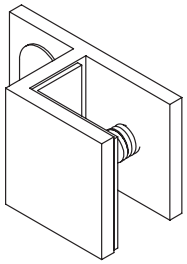

GLASS TO GLASS ALTERNATE STOPPER (MODEL DSGGALT)

KDC - Approved Building Consent Document - BC210441 - Pg 486 of 512 - 30/08/2021 - ComplyNZ

GLASS TO GLASS

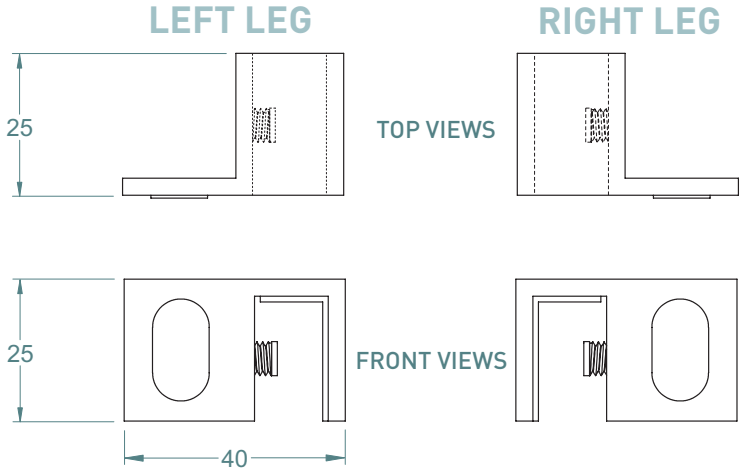

90° STOPPER

TO ORDER SPECIFY:

LEFT LEG
- **DSGG90PL** CHROME FINISH
- **DSGG90SL** SATIN FINISH
- **DSGG90BL** BLACK FINISH

RIGHT LEG
- **DSGG90PR** CHROME FINISH
- **DSGG90SR** SATIN FINISH
- **DSGG90BR** BLACK FINISH

GLASS TO GLASS

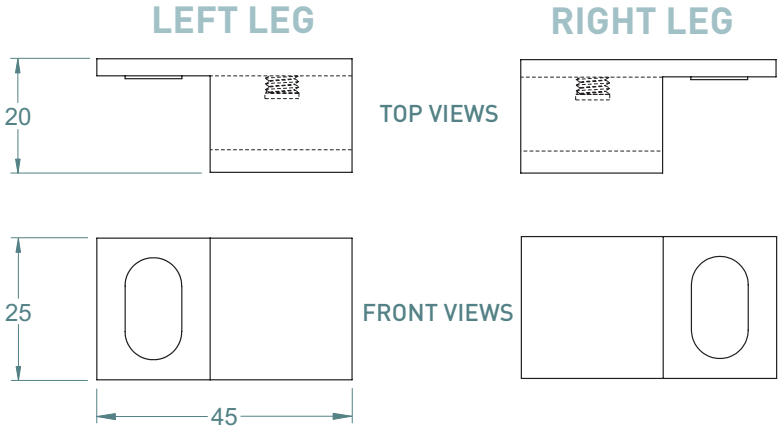

180° STOPPER

TO ORDER SPECIFY:

LEFT LEG
- **DSGG180PL** CHROME FINISH
- **DSGG180SL** SATIN FINISH
- **DSGG180BL** BLACK FINISH

RIGHT LEG
- **DSGG180PR** CHROME FINISH
- **DSGG180SR** SATIN FINISH
- **DSGG180BR** BLACK FINISH

GLASS TO OTHER

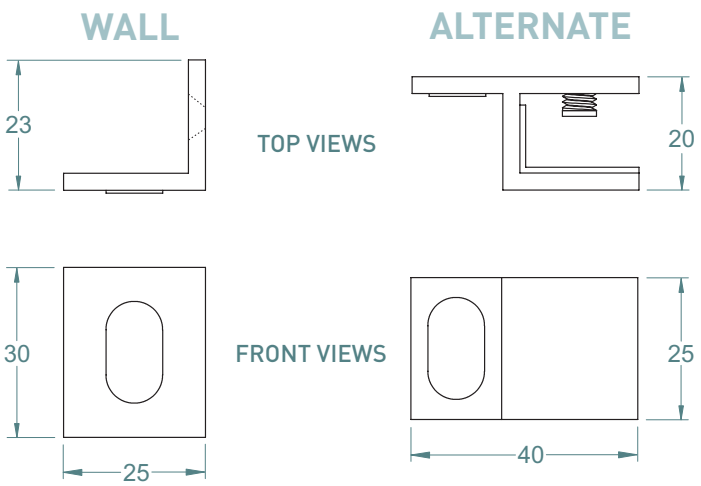

WALL STOPPER

TO ORDER SPECIFY:

- **DSGWP** CHROME FINISH
- **DSGWS** SATIN FINISH
- **DSGWB** BLACK FINISH

ALTERNATE STOPPER

TO ORDER SPECIFY:

- **DSGGALTP** CHROME FINISH
- **DSGGALTS** SATIN FINISH
- **DSGGALTB** BLACK FINISH

MAGNETIC DOOR HANDLE
GLASS TO DOOR JAMB

KDC - Approved Building Consent Document - BC210441 - Pg 487 of 512 - 30/08/2021 - ComplyNZ

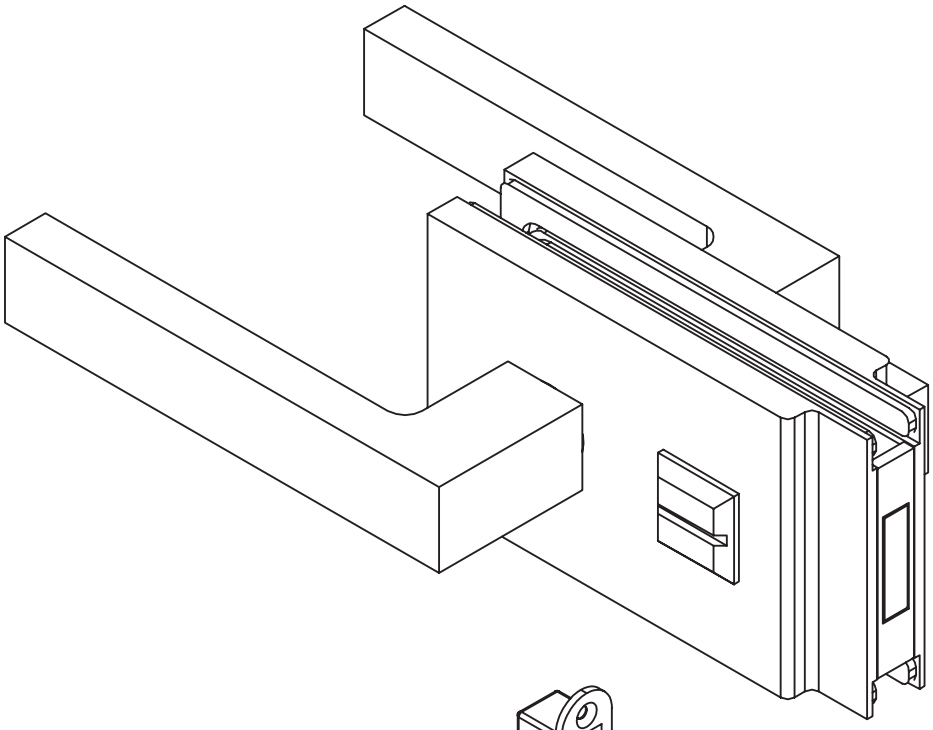

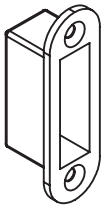

DOOR JAMB INSERT

FINISHES AND FUNCTIONS

- ALUMINIUM BODY
- BRUSHED FINISH
- POLISHED FINISH
- FITS DOOR JAMBS
- NOISELESS



8mm
12.7mm (1/2")

KDC - Approved Building Consent Document - BC210441 - Pg 488 of 512 - 30/08/2021 - ComplyNZ

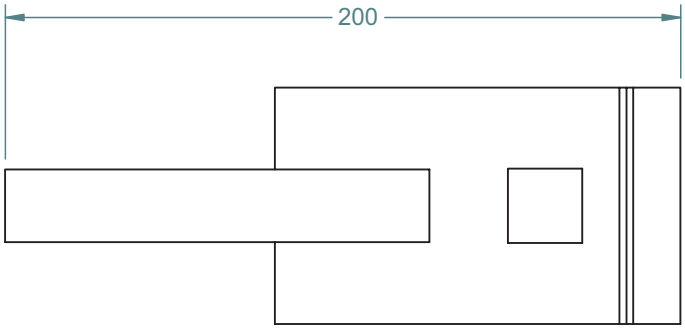

REAR VIEW

TO ORDER SPECIFY:

- **MHDJSC** BRUSHED FINISH WITH CYLINDER LOCK
- **MHDJSN** BRUSHED FINISH WITH PRIVACY KNOB
- **MHDJPC** POLISHED FINISH WITH CYLINDER LOCK
- **MHDJPN** POLISHED FINISH WITH PRIVACY KNOB

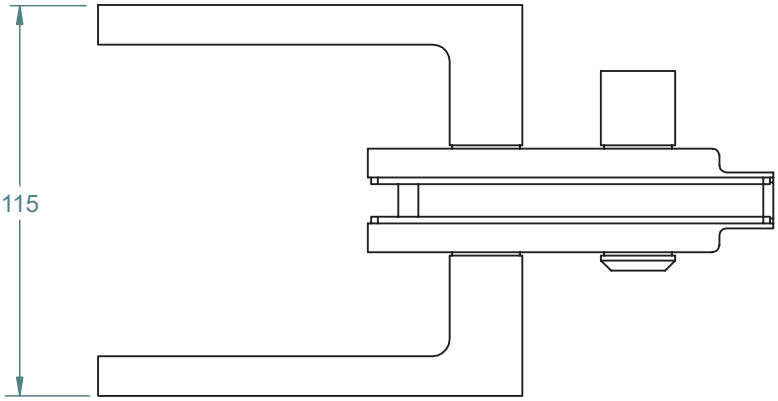

TOP VIEW

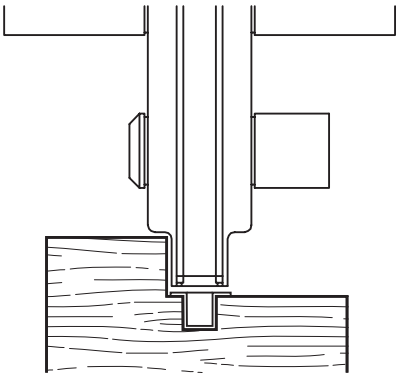

DOOR JAMB ILLUSTRATION

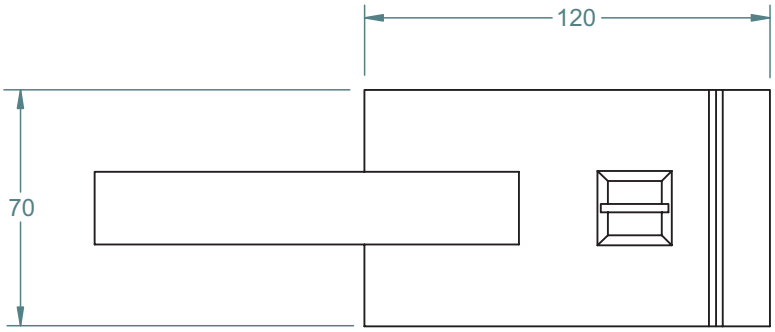

FRONT VIEW

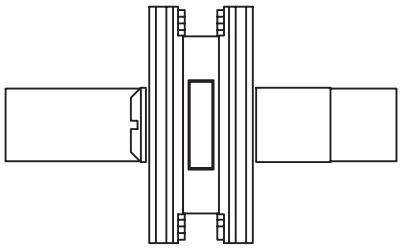

SIDE VIEW

DOOR JAMB INSERT

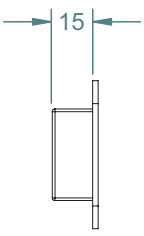

FRONT VIEW

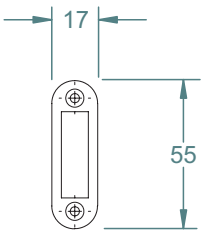

SIDE VIEW

MAGNETIC DOOR HANDLE
GLASS TO GLASS

KDC - Approved Building Consent Document - BC210441 - Pg 489 of 512 - 30/08/2021 - ComplyNZ

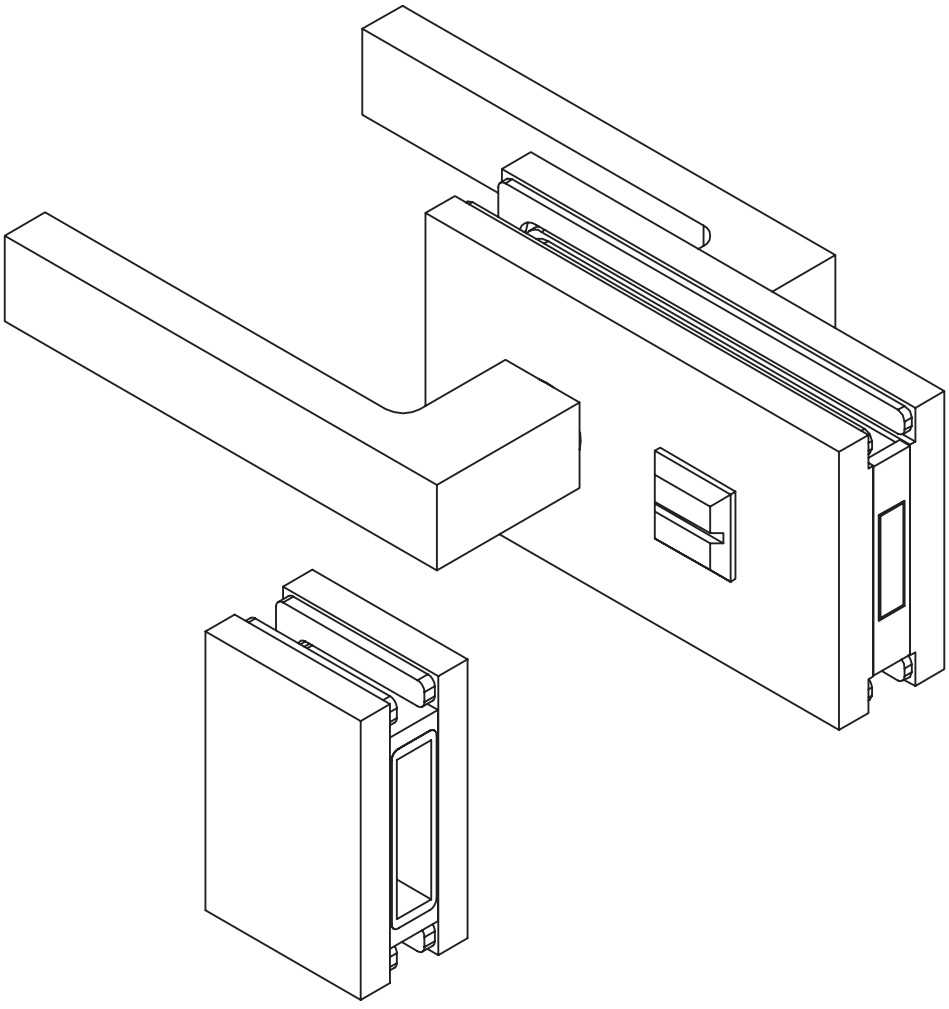

RECEIVER

FINISHES AND FUNCTIONS

- ALUMINIUM BODY
- BRUSHED FINISH
- POLISHED FINISH
- NOISELESS



8mm
12.7mm (1/2")

KDC - Approved Building Consent Document - BC210441 - Pg 490 of 512 - 30/08/2021 - ComplyNZ

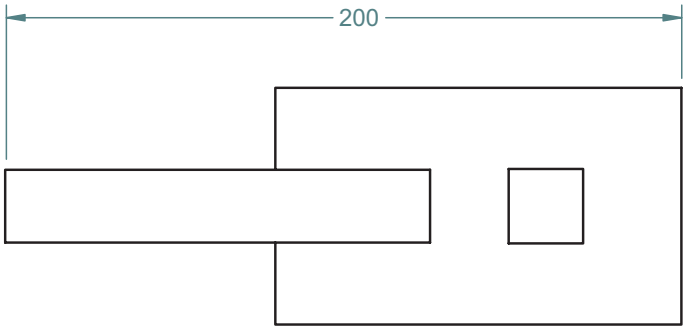

REAR VIEW

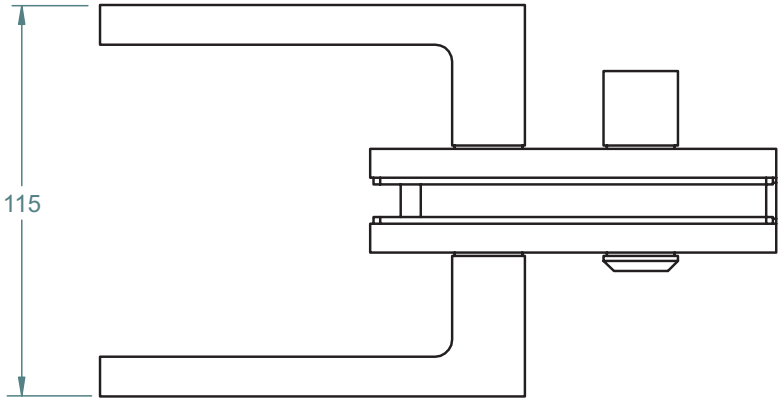

TOP VIEW

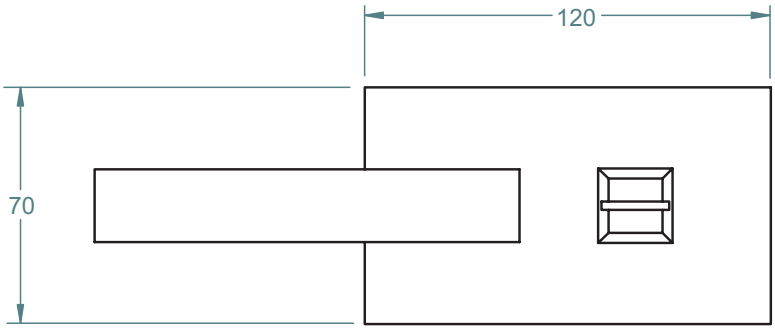

FRONT VIEW

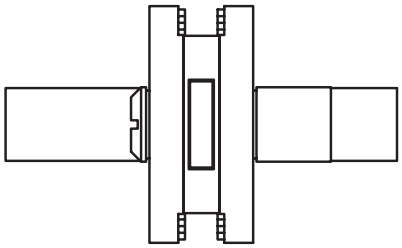

SIDE VIEW

TO ORDER SPECIFY:

- **MHGSC** BRUSHED FINISH WITH CYLINDER LOCK
- **MHGSN** BRUSHED FINISH WITH PRIVACY KNOB
- **MHGPC** POLISHED FINISH WITH CYLINDER LOCK
- **MHGPN** POLISHED FINISH WITH PRIVACY KNOB

RECEIVER

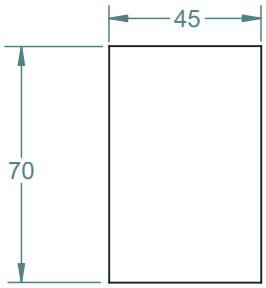

FRONT VIEW

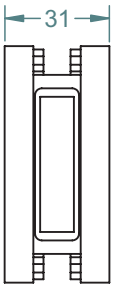

SIDE VIEW

KDC - Approved Building Consent Document - BC210441 - Pg 491 of 512 - 30/08/2021 - ComplyNZ

GLASS PREPARATION
120, 220 & 320 SERIES HINGE
GLASS TO GLASS

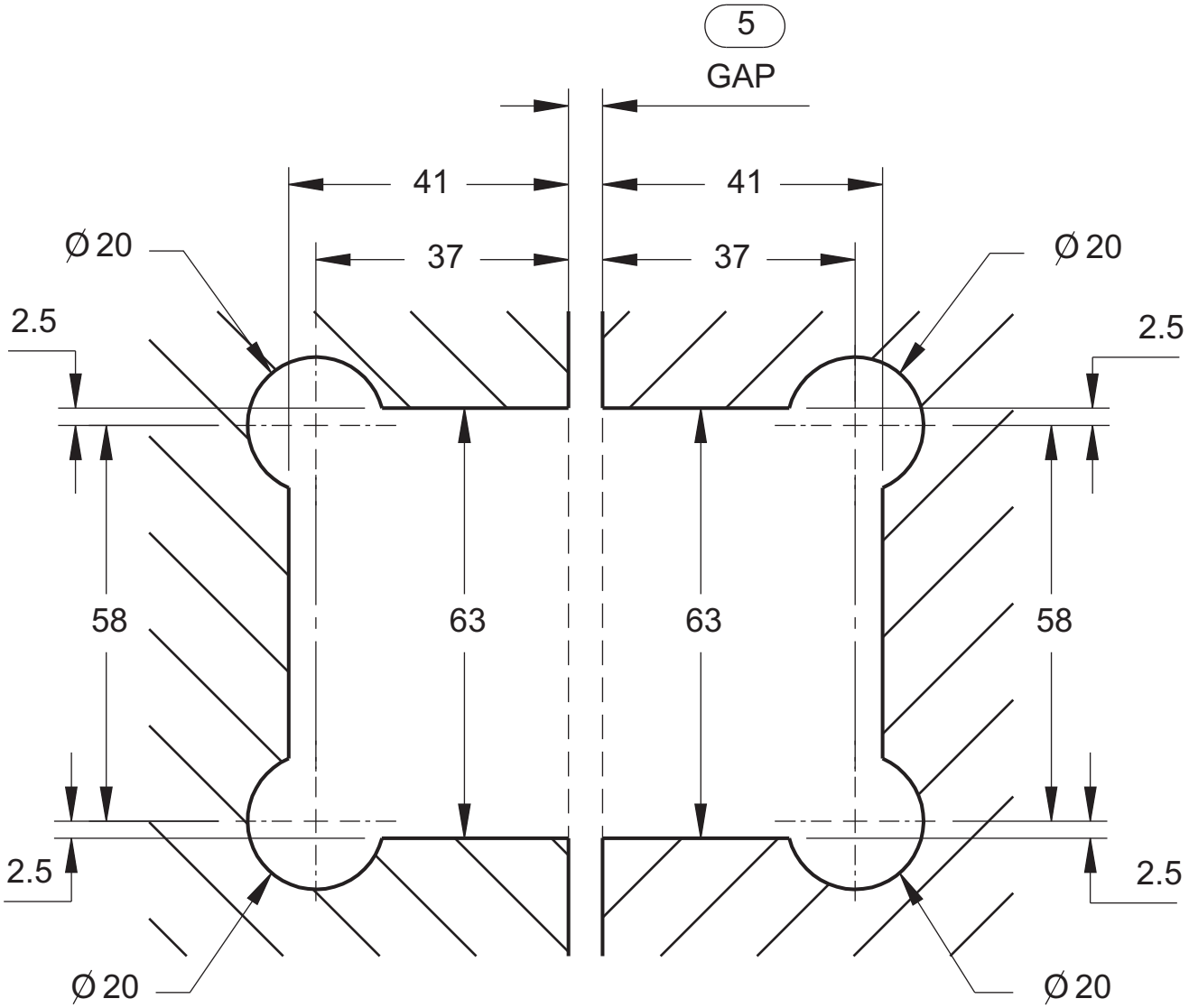

GLASS CUT-OUT TOP AND BOTTOM
(ALL DIMENSIONS IN MILLIMETERS)

KDC - Approved Building Consent Document - BC210441 - Pg 492 of 512 - 30/08/2021 - ComplyNZ

GLASS PREPARATION
120, 220 & 320 SERIES HINGE
GLASS TO WALL/POST

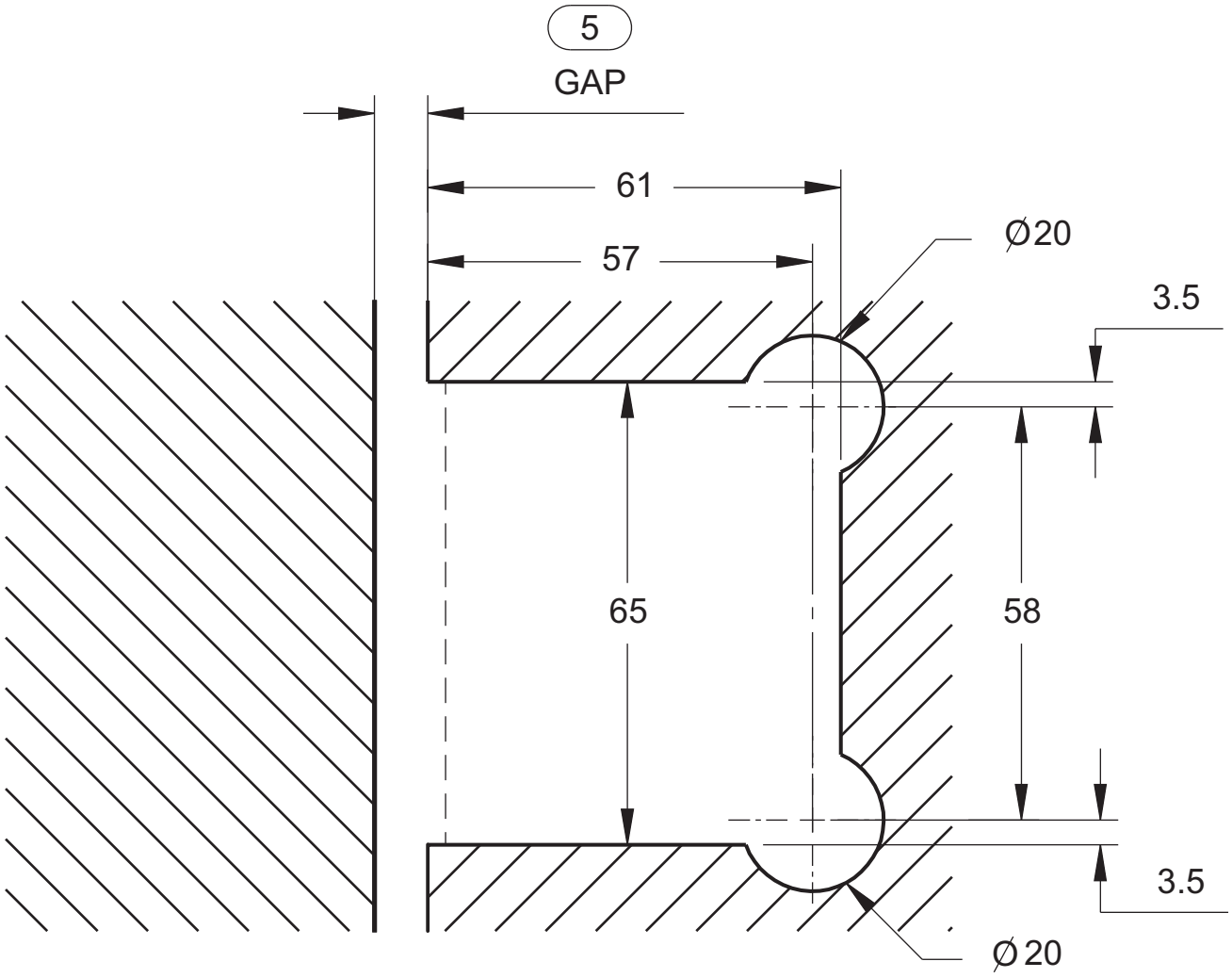

GLASS CUT-OUT TOP AND BOTTOM
(ALL DIMENSIONS IN MILLIMETERS)

KDC - Approved Building Consent Document - BC210441 - Pg 493 of 512 - 30/08/2021 - ComplyNZ

GLASS PREPARATION
MAGNETIC DOOR HANDLES
GLASS GATES/DOORS

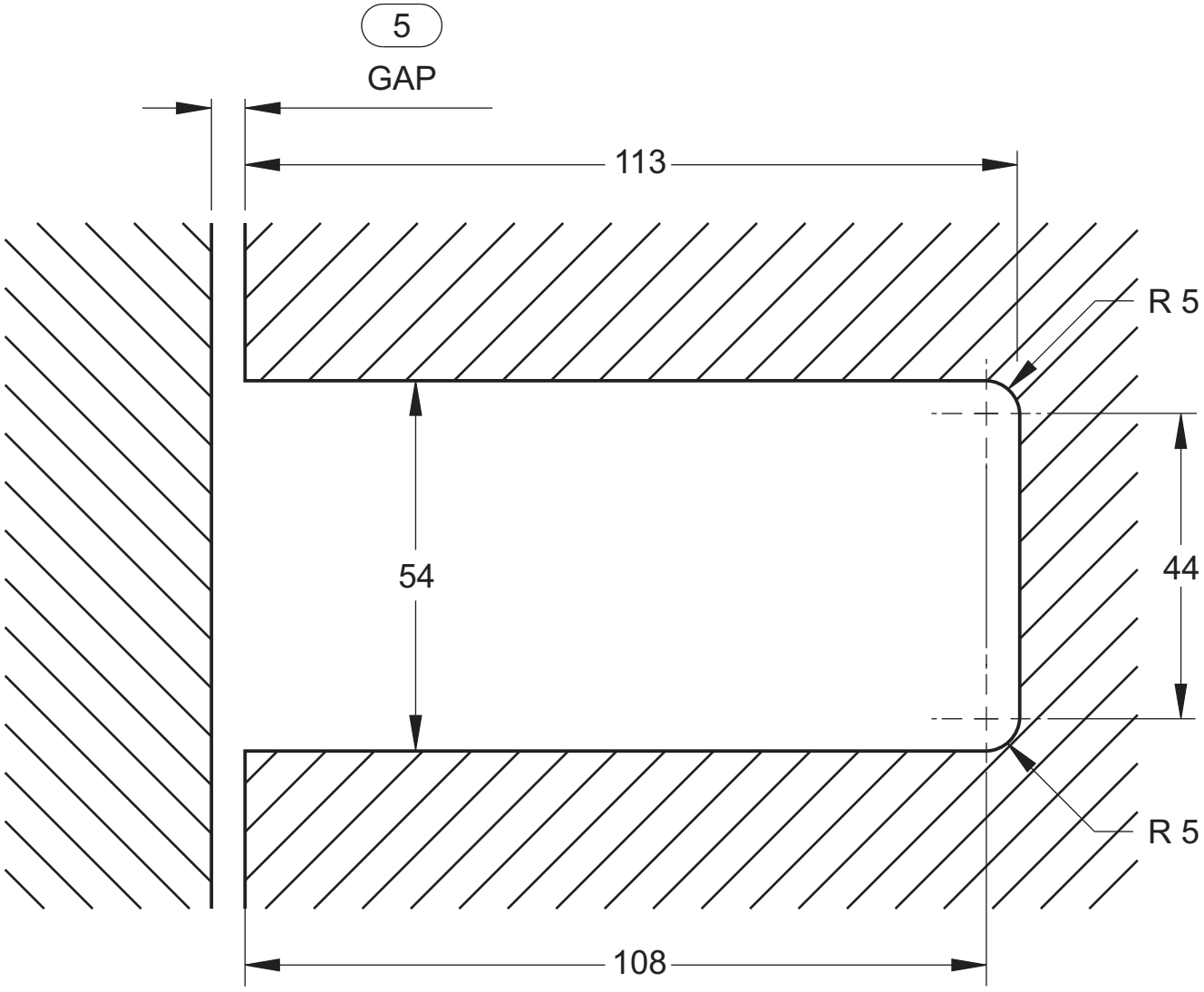

(ALL DIMENSIONS IN MILLIMETERS)

KDC - Approved Building Consent Document - BC210441 - Pg 494 of 512 - 30/08/2021 - ComplyNZ

GLASS PREPARATION MAGNETIC RECEIVER GLASS PANEL

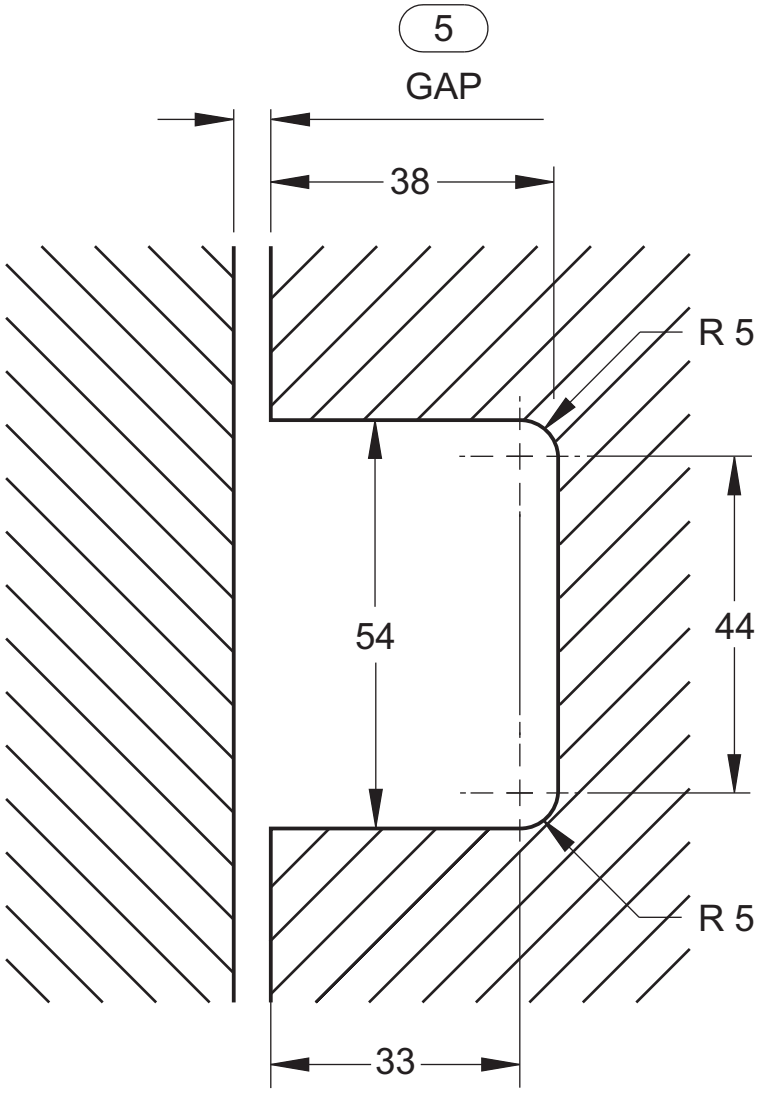

(ALL DIMENSIONS IN MILLIMETERS)

KDC - Approved Building Consent Document - BC210441 - Pg 495 of 512 - 30/08/2021 - ComplyNZ

GLASS HARDWARE AUSTRALIA

2A/172 SILVERWATER ROAD
SILVERWATER NSW 2128
AUSTRALIA

MORE PRODUCTS TO BE AVAILABLE SOON
PLEASE, CHECK OUR WEBSITE FOR MORE INFORMATION
www.polarishinge.com.au

Boundaryline

PRODUCER **STATEMENT - PS1**

Issue Date: 06 Nov 2020
Revision No. 1.02

KDC - Approved Building Consent Document - BC210441 - Pg 496 of 512 - 30/08/2021 - ComplyNZ

GLASS **FENCING** PS1

FOR: **GLASS POOL AND BALUSTRADE FENCING**

Engineering Specifications and Installation Details for compliancewith **NZBC B1, B2, F2, F4, F9**







P & P CONSULTING ENGINEERS LTD

Civil and Structural Engineering

Mr P. Prakash (Director)
B.E. (Civil), CPEng, MIPENZ
Mr J. Dela Cruz
B.E. (Civil), GIPENZ
Dr. H.D.W. FENDALL (Consultant)
B.E. (Civil) Hons., Ph.D., CPEng, MIPENZ

6A Montel Avenue,
Henderson,
AUCKLAND, 0612
Ph. & Fax 09-836-1853
parmil@pnpltd.co.nz
joel@pnpltd.co.nz

Ref: 15/154/ds
06 November2020

KDC - Approved Building Consent Document - BC210441 - Pg 497 of 512 - 30/08/2021 - ComplyNZ

BELAIRE DESIGNER FENCING

CANTILEVER GLASS BALUSTRADE AND POOL FENCE

DESIGN CALCULATIONS SUMMARY

INDEX **PAGE**

1. **Producer Statement - Design** 1

2. **Test Loads** 2

3. **Test Results** 2

Refer results from Materials & Testing Laboratories are attached following the calculations.

12 mm toughened glass is assessed to be sufficient for balustrade, max. height 1.0 m, width 1.4 m, two spigot support and 1.2 m high for swimming pool fence.

4. **Wind Load Assessment** 3

Panel is suitable for up to Very High Wind Zones.

5. **Fixings** 3

Refer attached drawing ENG 01 for details.

6. **Summary** 4

Notes:

1. Any parts of the structure which are not covered by the specific design included with these calculations must comply either with the New Zealand Building Code or specific design as detailed by others. Any exceptions to this should be referred back to this Design Office.

2. The above calculations include structural work for which a Building Consent must be obtained prior to building. It is the Owner's responsibility to obtain all necessary consents.

3. It is assumed that the strength and stiffness of the substrate is sufficient to adequately resist the fence loads – this must be confirmed for each installation situation.

4. This design assumes that all the specified members are suitably protected from excess moisture in accordance with Section E1, E2 and E3 of the Building Code.

KDC - Approved Building Consent Document - BC210441 - Pg 498 of 512 - 30/08/2021 - ComplyNZ

KDC - Approved Building Consent Document - BC210441 - Pg 499 of 512 - 30/08/2021 - ComplyNZ

engineering new zealand

New Zealand Institute of Architects Incorporated

ACENZ

Building Code Clause(s) B1, F2

PRODUCER STATEMENT – PS1 – DESIGN

(Guidance on use of Producer Statements (formerly page 2) is available at www.engineeringnz.org)

ISSUED BY: P&P CONSULTING ENGINEERS LTD
(Design Firm)

TO: Linda & Dave Kendall
(Owner/Developer)

TO BE SUPPLIED TO: Kaipara District Council
(Building Consent Authority)

IN RESPECT OF: CANTILEVER GLASS BALUSTRADE AND POOL FENCE
(Description of Building Work)

AT: 53 Robert Hastie Drive
(Address)

Town/City: Mangawhai **LOT** 81 **DP** 556753 **SO**
(Address)

We have been engaged by the owner/developer referred to above to provide:

STRUCTURAL DESIGN
(Extent of Engagement)

services in respect of the requirements of Clause(s) B1, F2 of the Building Code for:

☒ All or ☐ Part only (as specified in the attachment to this statement), of the proposed building work.

The design carried out by us has been prepared in accordance with:

☒ Compliance Documents issued by the Ministry of Business, Innovation & Employment B1/VM1,F2/AS1 or
(verification method/ solution)

☐ Alternative solution as per the attached schedule

The proposed building work covered by this producer statement is described on the drawings titled:

BELAIRE FENCING GLASS BALUSTRADE & POOL FENCE and numbered 15/154/DS & ENG 01;
together with the specification, and other documents set out in the schedule attached to this statement.

On behalf of the Design Firm, and subject to:
(i) Site verification of the following design assumptions REFER NOTES ON CALCULATIONS
(ii) All proprietary products meeting their performance specification requirements;

I believe on reasonable grounds that a) the building, if constructed in accordance with the drawings, specifications, and other documents provided or listed in the attached schedule, will comply with the relevant provisions of the Building Code and that b), the persons who have undertaken the design have the necessary competency to do so. I also recommend the following level of construction monitoring/observation:

☐ CM1 ☐ CM2 ☐ CM3 ☐ CM4 ☐ CM5 (Engineering Categories) or ☒ as per agreement with owner/developer (Architectural)

I, Parmil Prakash am: ☒ CPEng 251801 # ☐ Reg Arch #
(Name of Design Professional)

I am a member of: ☒ Engineering New Zealand ☐ NZIA and hold the following qualifications: BE(Civil), CPEng
The Design Firm issuing this statement holds a current policy of Professional Indemnity Insurance no less than $200,000*.
The Design Firm is a member of ACENZ: ☐

SIGNED BY Parmil Prakash (Signature)
(Name of Design Professional)

ON BEHALF OF P & P CONSULTING ENGINEERS LTD Date 06/11/2020
(Design Firm)

Note: This statement shall only be relied upon by the Building Consent Authority named above. Liability under this statement accrues to the Design Firm only. The total maximum amount of damages payable arising from this statement and all other statements provided to the Building Consent Authority in relation to this building work, whether in contract, tort or otherwise (including negligence), is limited to the sum of $200,000.*

This form is to accompany **Form 2 of the Building (Forms) Regulations 2004** for the application of a Building Consent.

THIS FORM AND ITS CONDITIONS ARE COPYRIGHT TO ACENZ, ENGINEERING NEW ZEALAND AND NZIA

P & P CONSULTING ENGINEERS LTD

Civil and Structural Engineering

Mr P. Prakash (Director)
B.E. (Civil), CPEng, MIPENZ
Mr J. Dela Cruz
B.E. (Civil), GIPENZ
Mr H. Yin
B.E. (Civil), GIPENZ
Dr. H.D.W. FENDALL (Consultant)
B.E. (Civil) Hons., Ph.D., CPEng, MIPENZ

6A Montel Avenue,
Henderson, AUCKLAND,
0612
Ph. & Fax 09-836-1853
parmil@pnpltd.co.nz
joel@pnpltd.co.nz
hansen@pnpltd.co.nz

KDC - Approved Building Consent Document - BC210441 - Pg 500 of 512 - 30/08/2021 - ComplyNZ

06/11/2020

Ref: 15/154

TO WHOM IT MAY CONCERN

Dear Sir/Madam,

B2 COMPLIANCE

Producer Statement for Design-PS1 for Clause B2 of the Building Code – Structural Durability.

We are not able to provide this because there is no effective verification method for B2 contained within the Building Code.

However we can confirm that for the structural elements shown on our documentation:

Timber
Timber treatment has been selected in accordance with Table 1A of B2/AS1.

Concrete
Concrete cover have been selected in accordance with NZS3101:2006, Part 1 Section 3.

Mild Steel
Steel protection has been specified in accordance with the "Guide to the protection of structural steel against atmospheric corrosion by the use of protective coatings" AS/NZS3212. We Note that this is on a time to first maintenance basis.

We trust this provides the information that you are seeking.

Yours faithfully,

Mr P Prakash
Director
P & P Consulting Engineers Limited

BELAIRE FENCING

ASSESSMENT OF TESTING OF CANTILEVER GLASS BALUSTRADES

CARRIED OUT BY MATERIALS & TESTING LABORATORIES LTD

USING STAINLESS STEEL VICE SUPPORT SYSTEM

KDC - Approved Building Consent Document - BC210441 - Pg 501 of 512 - 30/08/2021 - ComplyNZ

2. TEST LOADS

The glass and support vice was tested to comply with the following domestic load cases taken from AS/NZS 1170.1:2002 and the DBH Practice Advisory 10:

Occupancy Type	Refer Table 3.3 of AS/NZS 1170:	Maximum Design Loads		
A, C3 (Residential Only)	Domestic Barriers for One or More Dwellings including Balcony Edges (NOT subject to Over Crowding)	0.75 kN/m (75 kg/m) at 0.9 m height	0.6 kN (60 kg) Anywhere	1 kPa (100 kg/m2) Infill

The panel tested was 1.4 m wide x 1.2 m height using 12 mm toughened safety glass.

3. TEST RESULTS

The copy of the test result is attached herewith.

3.1 POINT LOAD AT CORNER

Basic Design Load From AS/NZS 1170 =	60 kg
Ultimate Limit State Load = 60 x 1.5 =	90 kg
Maximum Test Load =	120 kg
Test Load / ULS Load =	1.33
	Hence, 33 % overload passed, OK

Deflection:
Maximum deflection at SLS load (60 kg) = 56 mm
Allowable = height /30 = 40 mm, EXCESSIVE
Hence, limit the height of glass to 1 m, approximate deflection at 1 m = 32 mm, hence OK

3.2 UNIFORM LOAD AT 0.9 m

Basic Design Load From AS/NZS 1170 =	75 kg/m
Ultimate Limit State Load = 75 x 1.4 x 1.5 =	152 kg
Maximum Test Load =	210 kg
Test Load / ULS Load =	1.38
	Hence, 38 % overload passed, OK

Deflection:
Maximum deflection at SLS load (105 kg) = 57 mm
Allowable = height /30 = 40 mm, EXCESSIVE
Hence, limit the height of glass to 1 m, approximate deflection at 1 m = 32 mm, hence OK

3.3 INFILL PRESSURE

Basic Design Load From AS/NZS 1170 =	1 KPa = 100 kg/m2
Ultimate Limit State Load = 100 x 1.5	150 kg/m2
Maximum Test Load =	240 kg applied over 0.96 m2 area, pressure = 260 kg/m2

Hence considered to be OK as 1 m panel will be used, pressure = 200 kg/m2 (240/1.2)
(33% overload)

4. WIND LOAD ASSESSMENT

Panel Pressure based on test = 200 kg/m2

Consider external pressure coefficient (Cpe) of 1.2
Hence, q (basic) = 1.66 kPa
Basic Wind Speed, Vz = 52.6 m/s

Hence, Balustrade is suitable for "VERY HIGH" wind zone

5. FIXINGS

Max. BM along the base of glass = 1 kPa x 1.5 x 1.4 x 1.2^2 x 0.5 = 1.51 kNm (infill pressure, pool fence, 1.2 m)
= 1.1 kNm (for balustrade 1 m height)

BM to each Vice = 1.51/2 = 0.76 kNm (for pool fence)
or 0.55 kNm for balustrade

The fixings are 75 mm apart. Hence the maximum tensile load to the fixing is:

= 10.1 kN (pool fence)
= 7.3 kN (Balustrade)

Anchor Types

M8 Chemset Anchors to Concrete — Capacity = 14.4 x 0.93
= 13.4 kN — Hence, OK

M8 G4.6 Bolts to Steel Members — Capacity = 0.8 x 400 MPa x 50 mm2
= 16 kN — Hence, OK

M8 bolts to timber
Capacity is controlled by bearing on 50 mm x 50 mm square washers
= 0.7 x 5.3 MPa x 50^2
9.3 kN — Hence, OK for balustrade
Use 65 x 65 washer for pool fence

M8 Coach Screws to Timber
Capacity = 0.7 x 0.8 x 96 N/mm x 0.7 (wet) — 37.6 N/mm
= Required embedment = 120 mm

KDC - Approved Building Consent Document - BC210441 - Pg 502 of 512 - 30/08/2021 - ComplyNZ

KDC - Approved Building Consent Document - BC210441 - Pg 503 of 512 - 30/08/2021 - ComplyNZ

6. SUMMARY

In summary, the panel & fixings tested conform to the following:

LOADS:

Live Load: For Domestic Occupancy types A and C3 (residential only) of AS/NZS 1170:2002, Table 3.3
Wind Load: VERY HIGH as per NZS 3604

GLASS:

Thickness: 12 mm Toughened Grade A
Maximum height is 1 m above finished floor level for Balustrade situations
and 1.2 m height for Swimming Pool fence

FIXINGS:

Stainless steel spigots

Fixing of spigots to substrate to comprise any of the following:

4/ M8 Chemset anchors (Maxima spin capsules or Epcon C6 series)
4/M8 G4.6 bolts to steel member
4/M8 bolts or coach screws to timber

Notes:

1. It is assumed that the strength and stiffness of the substrate is sufficient to adequate resist the balustrade loads - this must be confirmed for each installation situation.
2. The fixings must comply with the durability requirements on the Building Code

KDC - Approved Building Consent Document - BC210441 - Pg 504 of 512 - 30/08/2021 - ComplyNZ

Section 3 – F2 Compliance

KDC - Approved Building Consent Document - BC210441 - Pg 505 of 512 - 30/08/2021 - ComplyNZ

Boundaryline

SAFETY GLASS CERTIFICATION
F2: COMPLIANCE

STATEMENT OF COMPLIANCE

To satisfy the New Zealand Building Code Acceptable Solution F2/AS1, glass likely to come into contact with people must comply with NZS 4223: Part 3:2016 Code of practice for glazing in buildings – Human impact safety requirements.

NZS 4223: Part 3:2016 requires Grade A safety glass to be used in shower doors, shower screens and bath enclosures and Glass Pool Fencing.

Boundaryline Fencing Systems confirms glass used in our Glass Pool Fencing and Balustrade has been produced to one or more of the following standards as outlined in Appendix 3.B of NZS 4223:Part 3:2016:

AS/NZS 2208 Grade A

BS 6206 Grade A

ANSI Z97.1

Will McGaveston GENERAL MANAGER

M: 0800 003 006 I sales@boundaryline.co.nz

November 2020

MATERIALS & TESTING
LABORATORIES LIMITED
Destructive & Non-destructive Test House

CERTIFICATE OF TEST

Report No. 42653/2
Page 1 of 3 pages

Reference: **BELAIRE DESIGNER FENCING**

Load Testing on 1400mm Long x 1200mm High Scenik Glass Infill Panel

Test Standard / Method: Method as discussed with client

Test Equipment: Riken P-4 Pump, Serial No. 22968 with AEP Digital Force Gauge, Serial No. 109626
SPX 5 Ton, Model B No. C55C Single Ram
(all verified against Shimadzu Universal Grade 1 Testing Machine, Model No. REH 50, Serial No. 72666. Calibration due June 2016).
Kristeel LAD 1 0-600mm

RESULTS:

1 x **Scenik Glass** infill panel 1400mm long x 1200mm high, mounted to 2 x stainless steel spigots. 3 x Separate load tests performed: MaximumLload vs Deflection at maximum load and Permanent Set recorded.

Test 1: ***240kg Distributed Through a 960 x 960mm Timber Load Board***

Applied Force (kg)	Deflection at Maximum Load (mm)
0	0
30	8
60	23
90	44
120	57
150	71
180	82
210	93
240	105

Permanent Set = 12mm – No failure observed.



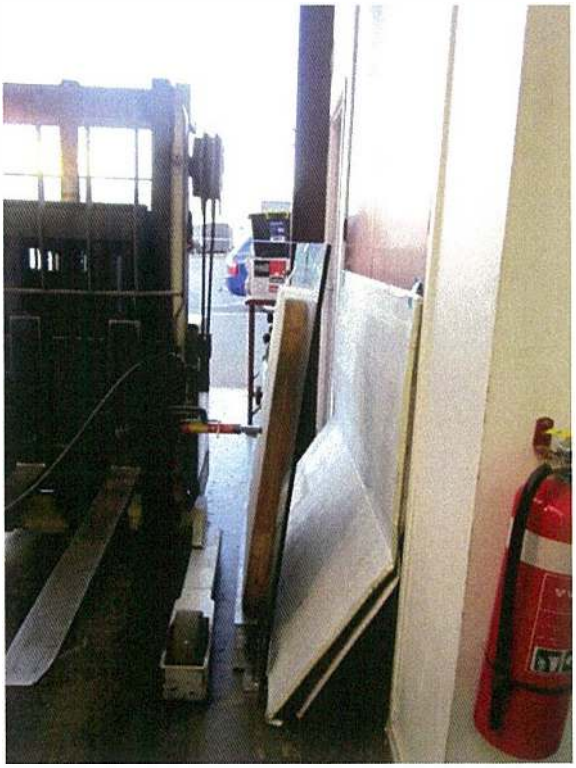

KDC - Approved Building Consent Document - BC210441 - Pg 506 of 512 - 30/08/2021 - ComplyNZ

P.O. BOX 14-042, PANMURE 1741, 172g MARUA RD, MT WELLINGTON, AUCKLAND, N.Z. TEL: 579 0262 FAX: 579 0260 Email: admin@mtlabs.co.nz

MATERIALS & TESTING
LABORATORIES LIMITED
Destructive & Non-destructive Test House

KDC - Approved Building Consent Document - BC210441 - Pg 507 of 512 - 30/08/2021 - ComplyNZ

Test 2: ***210kg Distributed Uniformly at 900mm High***

Applied Force (kg)	Deflection at Maximum Load (mm)
0	0
25	13
50	29
75	40
100	55
125	69
150	82
175	94
200	106
210	113

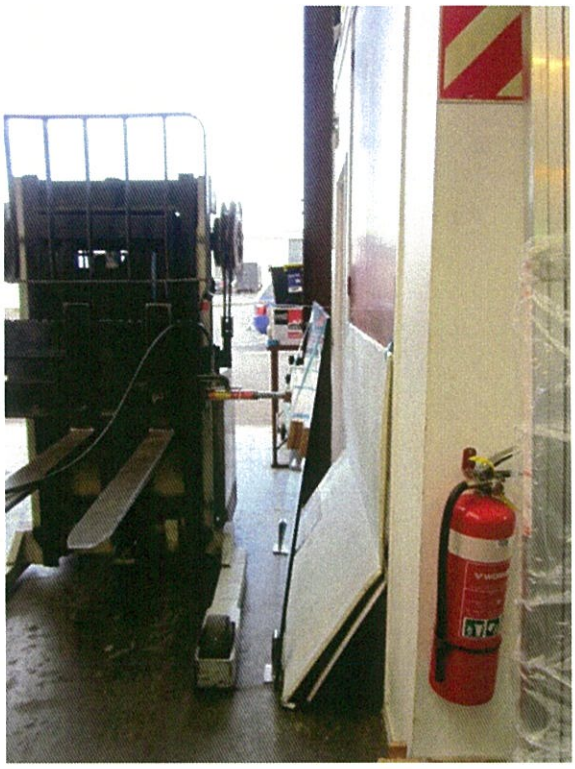

Permanent Set = 6mm – No failure observed.



Test 3:

Applied Force (kg)	Deflection at Maximum Load (mm)
0	0
25	24
50	46
75	68
100	87
120	100

Permanent Set = Zero mm – No failure observed.

P.O. BOX 14-042, PANMURE 1741, 172g MARUA RD, MT WELLINGTON, AUCKLAND, N.Z. TEL: 579 0262 FAX: 579 0260 Email: admin@mtlabs.co.nz

MATERIALS & TESTING
LABORATORIES LIMITED
Destructive & Non-destructive Test House

Report No. 42653/2
Page 3 of 3 pages

KDC - Approved Building Consent Document - BC210441 - Pg 508 of 512 - 30/08/2021 - ComplyNZ

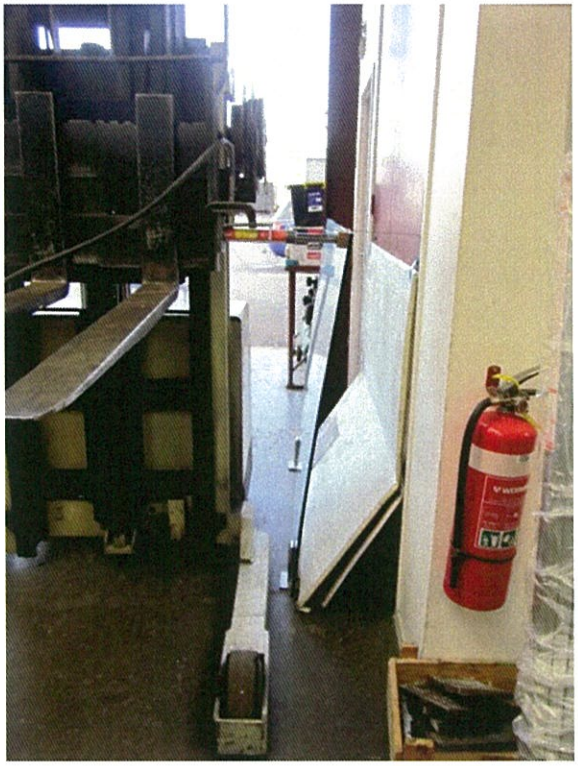

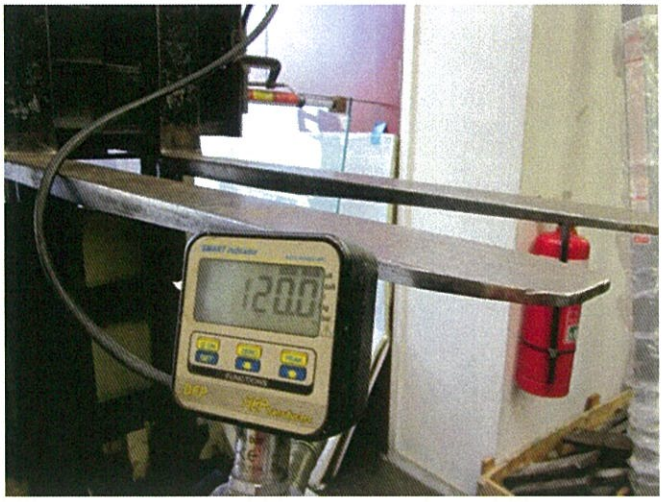

This report applies only to the samples tested.

Tested by: JS
Date tested: 07/05/15
Reported by: JS
Date reported: 07/05/15
Checked by:

Signed by:.....
J. SAUNDERS

P.O. BOX 14-042, PANMURE 1741, 172g MARUA RD, MT WELLINGTON, AUCKLAND, N.Z. TEL: 579 0262 FAX: 579 0260 Email: admin@mtlabs.co.nz

FRAMELESS GLASS BALUSTRADE & SWIMMING POOL FENCE SUPPORTED BY SPIGOTS

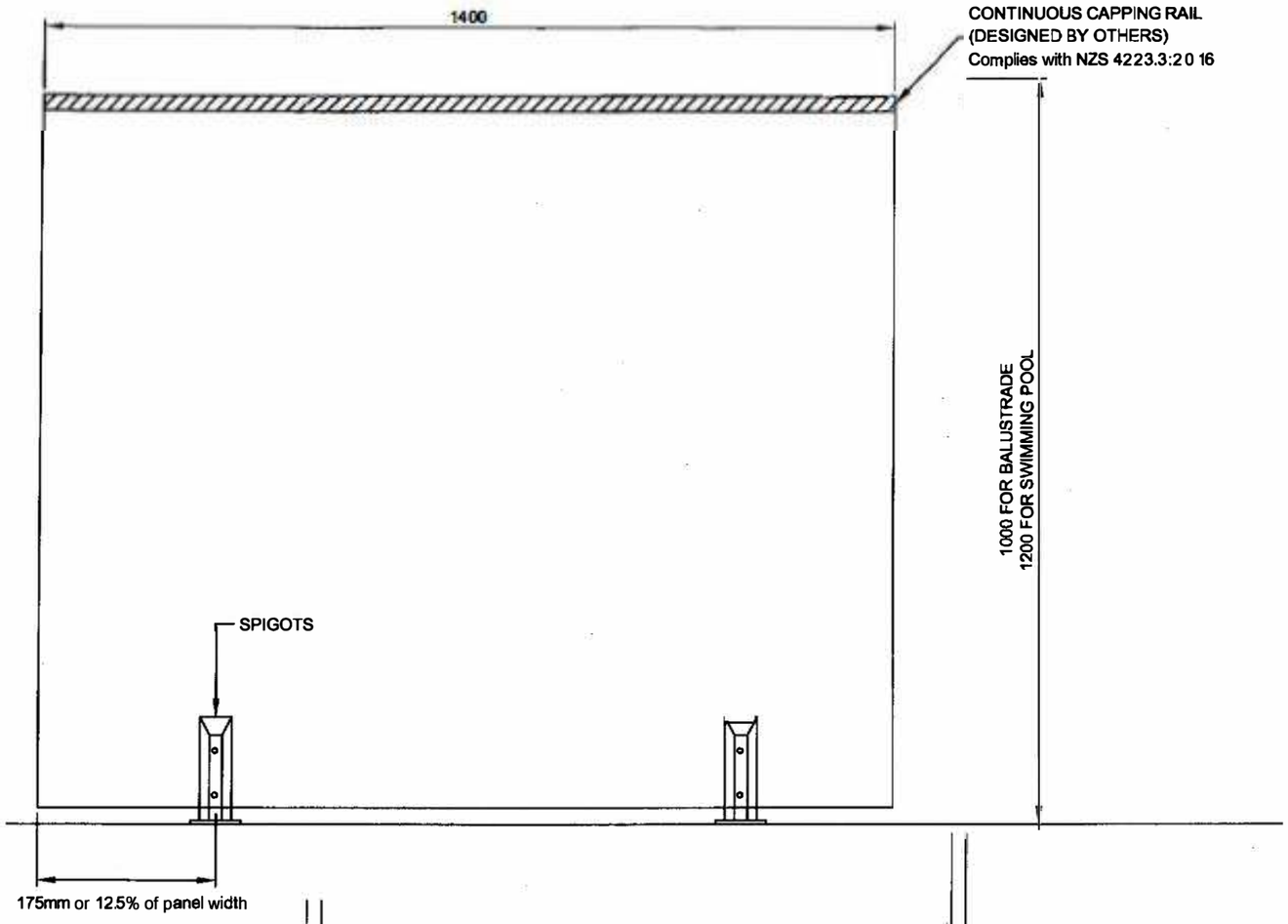

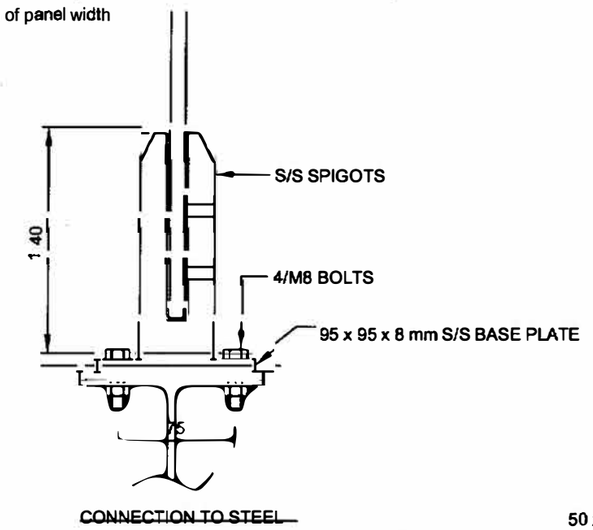

CONNECTION TO STEEL

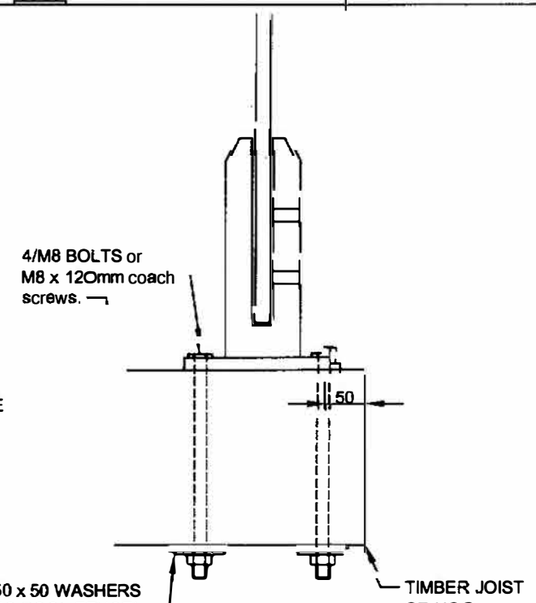

CONNECTION TO TIMBER

THIS GLASS BALUSTRADE SYSTEM IS SUITABLE FOR THE FOLLOWING:

LIVE LOAD:

OCCUPANCY TYPE	REFER TABLE 3.3 OF AS/NZS 1170	DESIGN LOAD
A C3 (Residential Only)	DOMESTIC- BARRIERS SERVING ONE OR MORE DWELLINGS INCLUDING BALCONY EDGES. (NOT SUBJECT TO CROWD LOADINGS)	0.6 kN CONC LOAD ANYWHERE, OR 0.75 kN/m LINE LOAD AT 0.9 m ABOVE FLOOR LEVEL

WIND LOAD:-

VERY HIGH WIND ZONE AS PER NZS 3604:2011

FIXINGS:
1. ALL ANCHORS MUST BE INSTALLED IN ACCORDANCE WITH MANUFACTURERS REQUIREMENTS.
2. BOLTING ARRANGEMENT MUST COMPLY WITH RELEVANT MATERIAL CODES.
3. STRENGTH & STIFFNESS OF THE SUBSTRATE STRUCTURE MUST BE SUFFICIENT FOR THE BALUSTRADE LOADS - THIS MUST BE SPECIFICALLY CHECKED BY OTHERS FOR EACH SITUATION.

DURABILITY.
ALL FIXINGS TO BE STAINLESS STEEL.

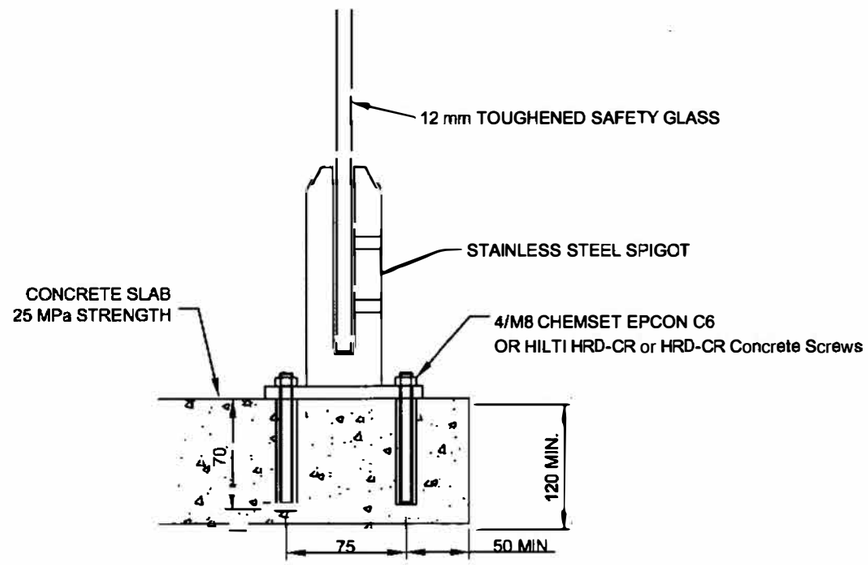

CONNECTION TO CONCRETE

KDC - Approved Building Consent Document - BC210441 - Pg 509 of 512 - 30/08/2021 - ComplyNZ

P & P CONSULTING ENGINEERS LTD Civil and Structural Engineering 6A Montel Avenue, Henderson ph: 836-1853	BELAIRE DESIGNER FENCING	Scales N.T.S	Project 15/154
	GLASS BALUSTRADE & FENCE SUPPORTED BY STAINLESS STEEL SPIGOTS	Drawn PP / Date 12-10-18	Sheet ENG 01

Frameless Glass Pool Fencing Glass Gate Hardware Compliance

Glass Gate Self Closing Hinges

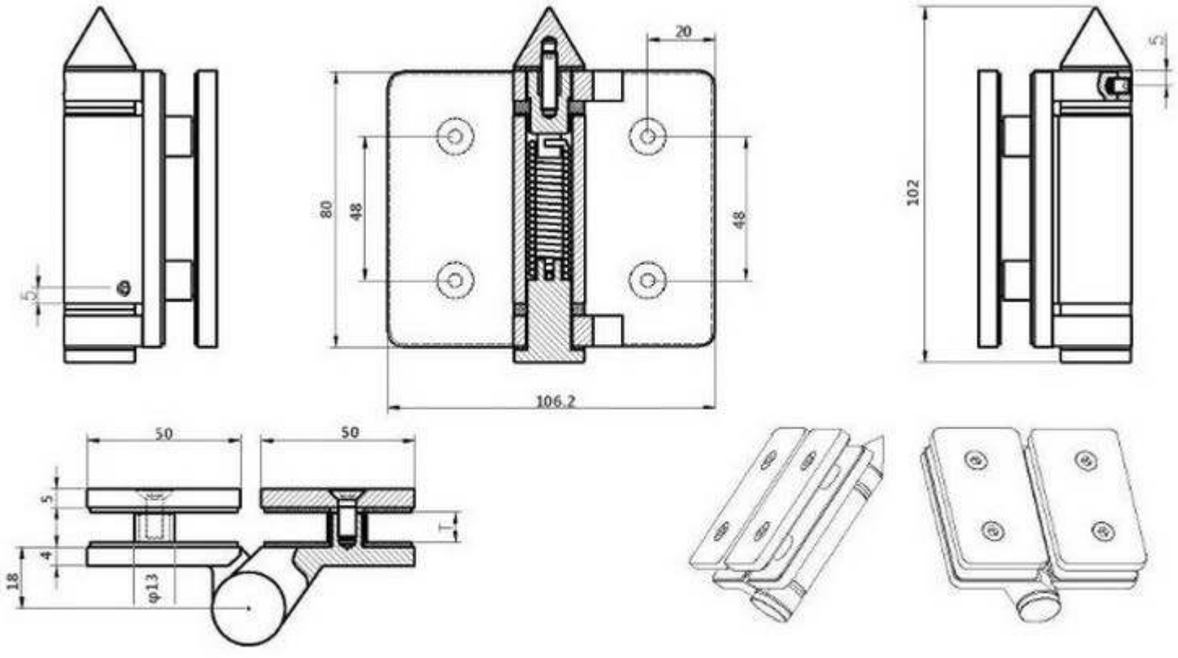

All Glass And Hardware Has Been tested to AS1926.1 - 2012, A full report is available on Request.

- **Gate Material:** 10mm Toughened Glass
- **Gate Size:** 1200mm high x 900mm wide
- **Lock Description:** Magnalatch
- **Hinge Descption:** Self Closing Spring hinge gate
- **Lock On Inside of Barrier:** Yes
- **Self Closing from all angles:** Yes
- **Self Closing from 150mm of open:** Yes
- **Overall Gate Height:** 1250mm

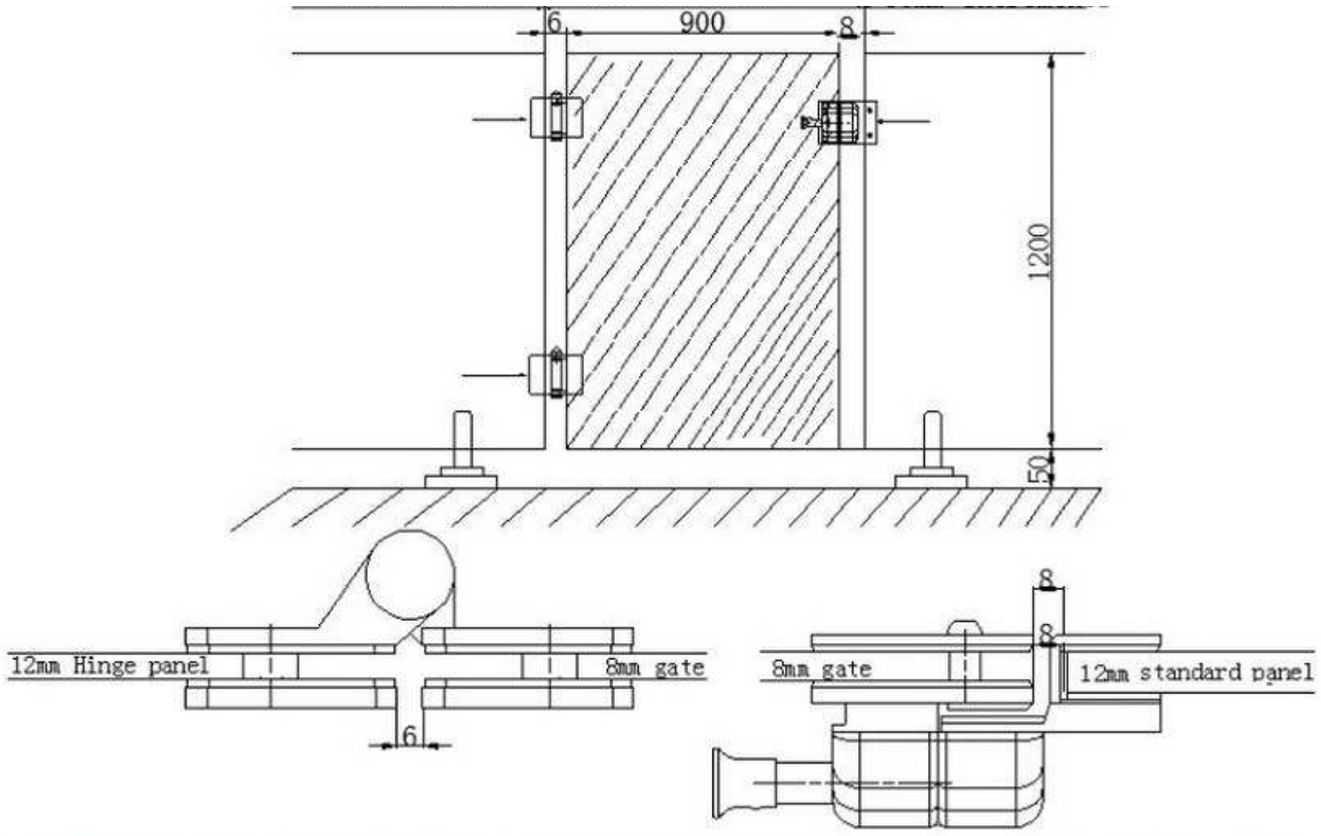

KDC - Approved Building Consent Document - BC210441 - Pg 510 of 512 - 30/08/2021 - ComplyNZ

KDC - Approved Building Consent Document - BC210441 - Pg 511 of 512 - 30/08/2021 - ComplyNZ

Frameless Glass Pool Fencing Glass Gate Hardware Compliance

Glass Gate Self Locking Gate Latch

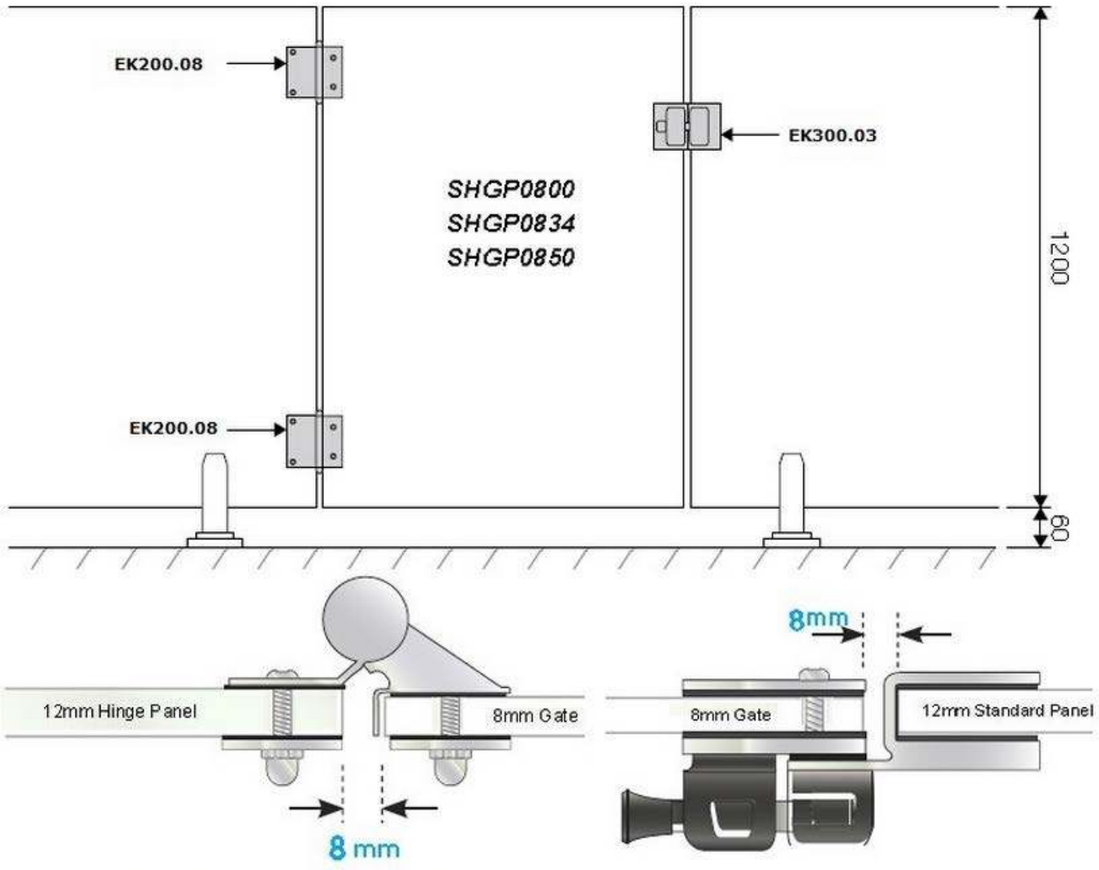

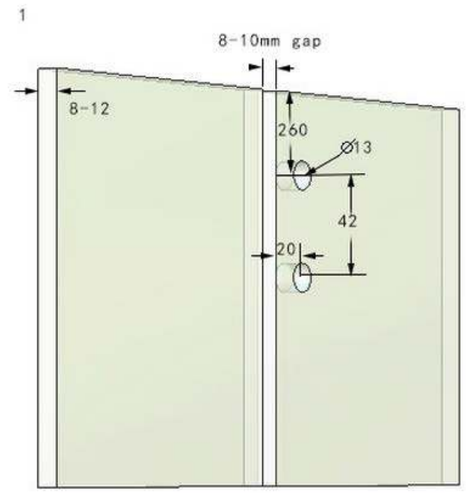

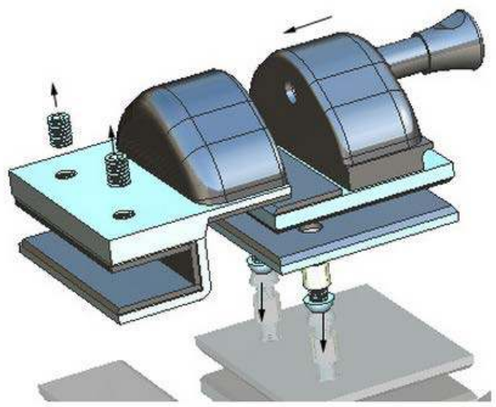

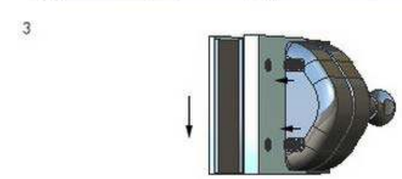

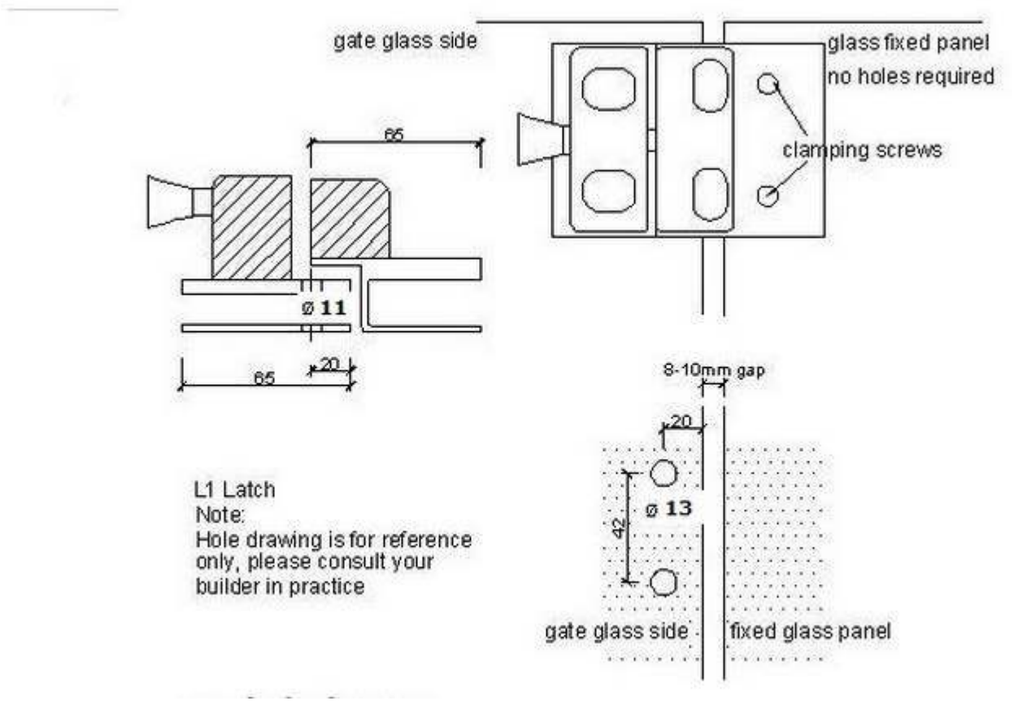

Below Is a photo of the Testing Setup to comply with AS1926.1 - 2012

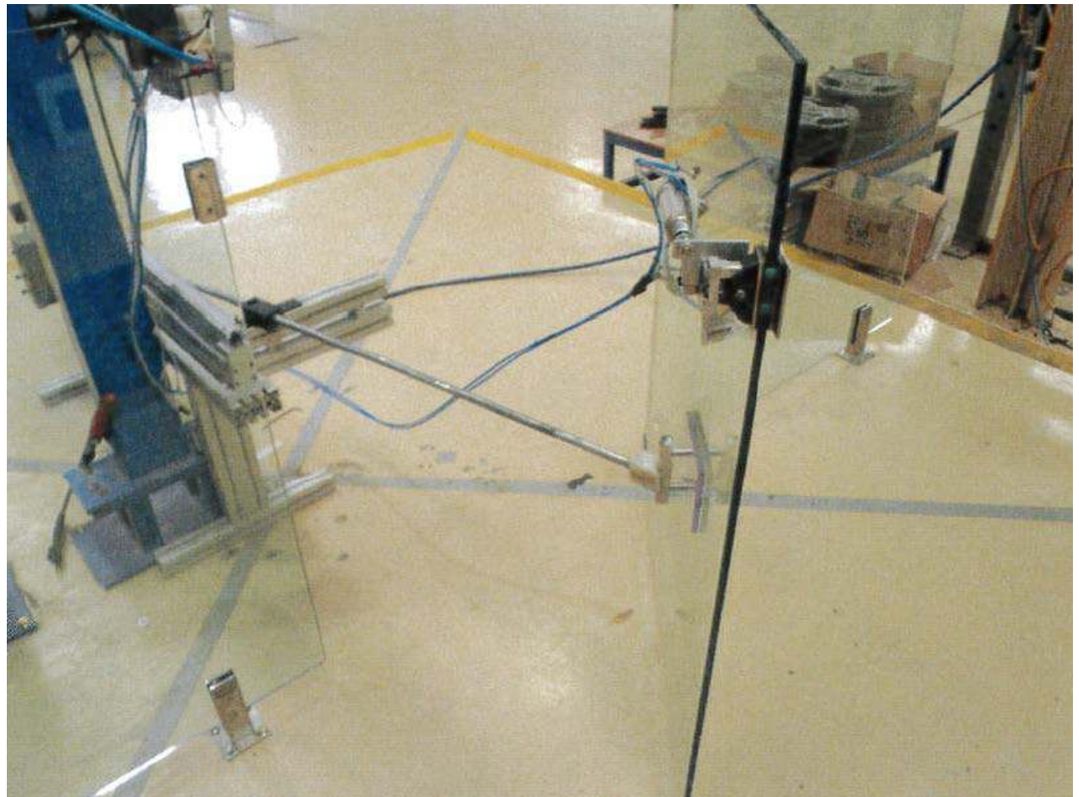

KDC - Approved Building Consent Document - BC210441 - Pg 512 of 512 - 30/08/2021 - ComplyNZ

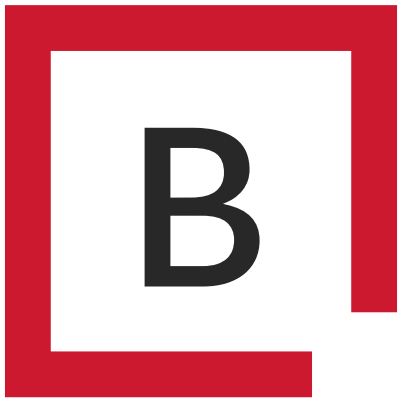

Boundaryline

0800 003 006 / boundaryline.co.nz

KDC - Approved Building Consent Document - BC210441 - Pg 1 of 336 - 30/08/2021 - ComplyNZ

Kaipara te Oranganui

KAIPARA DISTRICT

Two Oceans Two Harbours

Approved Building Consent Documents

Please note: A copy of the stamped, approved documents must be available onsite for **all** inspections.

GIB EzyBrace® Bracing Software

Demand Calculation Sheet

Job Details

Name:	Kendall
Street and Number:	Lot 81 Robert Hastie Drive
Lot and DP Number:	Lot 81 DP 556753
City/Town/District:	Mangawhai
Designer:	Marc R. Vale
Company:	Cadetailer Ltd.
Date:	23.07.2021

Building Specification

Number of Storeys	1
Floor Loading	2 kPa
Foundation Type	Slab
	Single
Cladding Weight	Medium
Roof Weight	Light
Room in Roof Space	No
Roof Pitch (degrees)	25
Roof Height above Eaves (m)	2.74
Building Height to Apex (m)	5.23
Ground to Lower Floor (m)	0.2
Average Stud Height (m)	2.55
Building Length (m)	25.9
Building Width (m)	17.6
Building Plan Area (m²)	270

Building Location

Wind Zone = High

Earthquake Zone 1

Soil Type D & E (Deep to Very Soft)

Annual Prob. of Exceedance: 1 in 500 (Default)

Bracing Units required for Wind

	Along	Across
Single Level	**988**	**1530**

Bracing Units required for Earthquake

	Along & Across
Single Level	**807**

KDC - Approved Building Consent Document - BC210441 - Pg 2 of 336 - 30/08/2021 - ComplyNZ

GIB EzyBrace® Bracing Software

Single Level Along Resistance Sheet

Job Name: Kendall

Line	Element	Length (m)	Angle (degrees)	Stud Ht. (m)	Type	Supplier	Wind (BUs)	EQ (BUs)	Wind	EQ
									Demand	
									988	807
									Achieved	
									2309	2373
									234%	294%
M	1	2.40		2.55	EP1/EPB1-12	EcoPly & EP Barrier	271	305		
	External Length = 6.0								271 OK	305 OK
N	1	1.80		2.55	GS1-N	GIB®	117	102		
	2	0.90		2.55	GS1-N	GIB®	53	50		
									170 OK	152 OK
O	1	1.20		2.55	EP1/EPB1-12	EcoPly & EP Barrier	136	152		
	2	1.20		2.55	EP1/EPB1-12	EcoPly & EP Barrier	136	152		
	External Length = 6.5								271 OK	305 OK
P	1	1.80		2.55	GS1-N	GIB®	117	102		
	2	1.20		2.55	EP1/EPB1-12	EcoPly & EP Barrier	136	152		
	3	1.20		2.55	EP1/EPB1-12	EcoPly & EP Barrier	136	152		
	4	1.20		2.55	EP1/EPB1-12	EcoPly & EP Barrier	136	152		
	5	2.40		2.55	GS1-N	GIB®	156	136		
	External Length = 14.26								679 OK	695 OK
Q	1	1.80		2.55	GS1-N	GIB®	117	102		
	2	1.80		2.55	GS1-N	GIB®	117	102		
	3	3.30		2.55	GS1-N	GIB®	214	186		
	External Length = 0.85								448 OK	390 OK
R	1	0.60		2.55	EP1/EPB1-06	EcoPly & EP Barrier	54	59		
	2	1.20		2.55	EP1/EPB1-12	EcoPly & EP Barrier	136	152		
	3	1.20		2.55	EP1/EPB1-12	EcoPly & EP Barrier	136	152		
	4	0.60		2.55	EP1/EPB1-06	EcoPly & EP Barrier	54	59		
	5	0.60		2.55	EP1/EPB1-06	EcoPly & EP Barrier	54	59		
	6	0.50		2.55	EP1/EPB1-04	EcoPly & EP Barrier	38	45		
	External Length = 25.91								470 OK	528 OK

KDC - Approved Building Consent Document - BC210441 - Pg 3 of 336 - 30/08/2021 - ComplyNZ

GIB EzyBrace® Bracing Software

Single Level Across Resistance Sheet

Job Name: Kendall

							Wind	EQ
							Demand	
							1530	807
							Achieved	
Line	Element	Length (m)	Angle (degrees)	Stud Ht. (m)	Type	Supplier	Wind (BUs)	EQ (BUs)	2553 167%	2595 322%
A	1	2.40		2.55	EP1/EPB1-12	EcoPly & EP Barrier	271	305		
	2	1.20		2.55	EP1/EPB1-12	EcoPly & EP Barrier	136	152		
	External Length = 11.36								407 OK	457 OK
B	1	4.10		2.55	GS1-N	GIB®	266	232		
	2	2.60		2.55	GS1-N	GIB®	169	147		
									435 OK	378 OK
C	1	2.30		2.55	GS1-N	GIB®	149	130		
	2	1.90		2.55	GS1-N	GIB®	123	107		
	3	1.20		2.55	EP1/EPB1-12	EcoPly & EP Barrier	136	152		
	4	0.60		2.55	EP1/EPB1-06	EcoPly & EP Barrier	54	59		
	External Length = 4.57								462 OK	449 OK
D	1	3.40		2.55	GS1-N	GIB®	221	192		
	External Length = 0.5								221 OK	192 OK
E	1	2.10		2.55	GS1-N	GIB®	136	119		
	2	1.20		2.55	EP1/EPB1-12	EcoPly & EP Barrier	136	152		
	3	1.20		2.55	EP1/EPB1-12	EcoPly & EP Barrier	136	152		
	4	1.20		2.55	EP1/EPB1-12	EcoPly & EP Barrier	136	152		
	External Length = 10.31								543 OK	576 OK
F	1	1.00		2.55	EP1/EPB1-06	EcoPly & EP Barrier	89	99		
	2	1.20		2.55	EP1/EPB1-12	EcoPly & EP Barrier	136	152		
	3	0.80		2.55	EP1/EPB1-06	EcoPly & EP Barrier	72	79		
	4	1.20		2.55	EP1/EPB1-12	EcoPly & EP Barrier	136	152		
	5	0.60		2.55	EP1/EPB1-06	EcoPly & EP Barrier	54	59		
	External Length = 17.6								486 OK	542 OK

KDC - Approved Building Consent Document - BC210441 - Pg 4 of 336 - 30/08/2021 - ComplyNZ

KDC - Approved Building Consent Document - BC210441 - Pg 5 of 336 - 30/08/2021 - ComplyNZ

GIB® Bracing Supplement Document

Issue Date December 2016

GIB® Bracing design notes

SUPPLEMENT	ISSUE DATE
GIB Ezybrace® Systems 2016 BU/m Ratings	Sept-16
Designing and Building with GS2-NOM	Sept-16
Multi Layer Bracing Systems	Aug-16
GIB® News article: Wings, Blocks & Diaphragms	Apr-13
GIB® News article: Low Damage Solutions for Non- Structural Elements	Jul-12
GIB® News article: Canterbury Earthquake Online Guides	Mar-12
Bracing Light Timber Frame Buildings Using Sheet Materials	Nov-11
Distribution of Wall Bracing Elements	Nov-11
Designing Bracing Upgrades	Jun-11

KDC - Approved Building Consent Document - BC210441 - Pg 6 of 336 - 30/08/2021 - ComplyNZ

GIB Ezybrace® Systems 2016 BU/m Ratings

Issue Date September 2016

The BU/m ratings for GIB EzyBrace® Systems shown below are responsibly conservative and are provided to allow manual calculation, and for use in alternative proprietary software.

The GIB EzyBrace® 2016 software delivers more accurate demand calculations based on specific building parameters entered, and bracing resistance (BU/m) is often higher than the values presented below. Do not use this table to assess bracing substitutions.

Table 1: GIB® Standard Bracing Unit Ratings

Type	Minimum Length (m)	Lining	Other Requirements	BU/m	
				W	EQ
GS1-N	0.4	GIB® Standard plasterboard one side	N/A	50	55
	1.2			70	60
GS2-N	0.4	GIB® Standard plasterboard both sides	N/A	70	65
	1.2			95	85
GS2-NOM	0.4	GIB® Standard plasterboard both sides (standard GIB® site guide fastener pattern)	N/A	50	50
GSP-H	0.4	GIB® Standard plasterboard one side, structural plywood the other	Panel hold-down fixings	100	115
	1.2			150*	150*

Table 2: GIB Braceline® Bracing Unit Ratings

Type	Minimum Length (m)	Lining	Other Requirements	BU/m	
				W	EQ
BL1-H	0.4	GIB Braceline® one side	Panel hold-down fixings	90	100
	1.2			125*	105
BLG-H	0.4	GIB Braceline® one side, GIB® Standard plasterboard the other	Panel hold-down fixings	110	115
	1.2			150*	145*
BLP-H	0.4	GIB Braceline® one side, structural plywood the other	Panel hold-down fixings	120*	135*
	1.2			150*	150*

** Timber Floors – A limit of 120 BU/m for NZS 3604:2011 timber floors applies unless specific engineering ensures that uplift forces generated by elements rated higher than 120 BU/m can be resisted by floor framing.*

KDC - Approved Building Consent Document - BC210441 - Pg 7 of 336 - 30/08/2021 - ComplyNZ

Wall Heights other than 2.4m

The published Bracing Unit ratings are based on a 2.4 metre height. For greater heights, the ratings must be multiplied by a factor f = 2.4 divided by the actual wall height. The Bracing Unit ratings for walls higher than 2.4 metres will reduce.

For example:

The Bracing Unit rating of a 2.7 metre high wall is obtained by multiplying the values in Tables 1 and 2 by f = 2.4/2.7 = 0.89

The Bracing Unit rating of a 3.6 metre high wall is obtained by multiplying the values in Tables 1 and 2 by f = 2.4/3.6 = 0.67

The height of walls with a sloping top plate can be taken as the average height.

Walls lower than 2.4 metres shall be rated as if they were 2.4 metres high.

For more information visit gib.co.nz/ezybrace or call the GIB® Helpline on 0800 100 442.

KDC - Approved Building Consent Document - BC210441 - Pg 8 of 336 - 30/08/2021 - ComplyNZ

GIB®

Designing and Building with GS2-NOM

Issue Date September 2016

GIB EzyBrace® Systems 2016 literature and software includes the option of allowing nominally fixed internal walls lined on both sides with GIB® plasterboard to contribute to the building's bracing resistance. The fixing pattern as illustrated below represents the standard fixing pattern as published on page 38-39 of the GIB® Site Guide (December 2014).

Building investigations following the Canterbury earthquakes have confirmed that not only designated bracing elements (such as GS1-N & GS2-N) resist lateral forces. Nominally fastened internal walls also contribute (often substantially) to the building's total resistance. An earthquake does not distinguish between designated GIB® plasterboard bracing elements and nominally fastened GIB® plasterboard linings. All the walls contribute to providing resistance against wind and earthquake forces.

Permitting nominally fixed internal GIB® plasterboard linings to contribute to bracing resistance means that the total number of nails or screws can be reduced significantly. This results in a simpler and more uniform fastener pattern and a reduction in the risks of fastener 'popping' as a result of timber movement. This improves the chance of achieving a high quality of finish.

When compared with GS1-N and GS2-N, the same Bracing Unit (BU) rating can be achieved with GS2-NOM using 30% to 40% fewer screws.

The design examples on the following pages illustrate how fastener numbers can be reduced.

FIGURE 1: GS2-NOM SCREW FIXING PATTERN

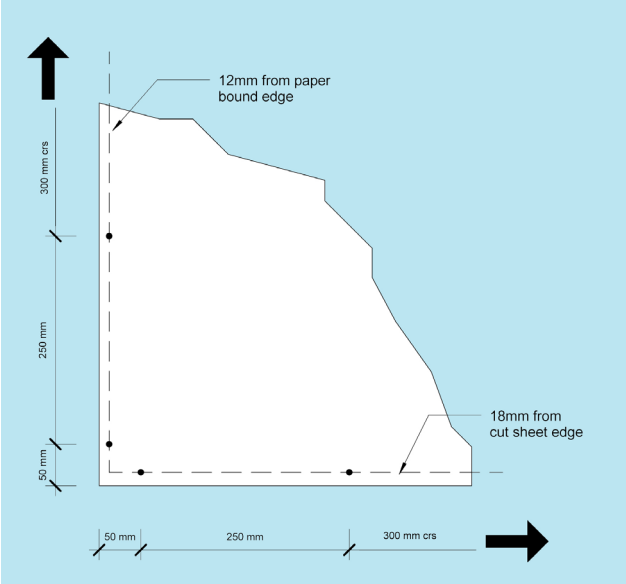

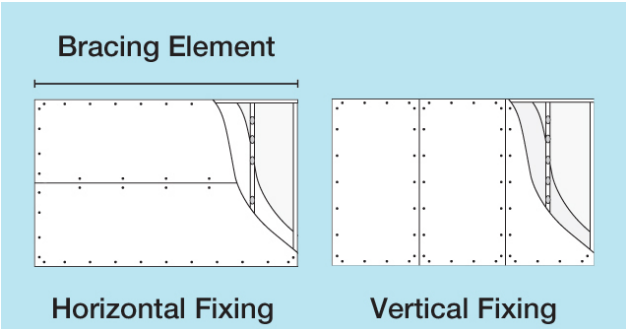

KDC - Approved Building Consent Document - BC210441 - Pg 9 of 336 - 30/08/2021 - ComplyNZ

GS2-NOM - DESIGN APPROACH 1

The design example in Figure 2 below shows designated bracing elements GS1-N and BL1-H used around the perimeter of the house. A note is added that all remaining GIB® plasterboard linings are fixed at the nominal GIB® Site Guide pattern.

In this particular case the design calculations in Figure 3 show that bracing resistance exceeds demand by 60% when accounting for nominally fixed GS2-NOM throughout. Had GS1-N or GS2-N designated internal bracing elements been used, in addition to nominally fixed (not counted) remaining walls, the fastener count could have increased by more than 500 screws.

The calculations also show how lengths of GS2-NOM can be accumulated on a bracing line. Lengths of internal wall equal or greater than 0.4 m can be added, provided walls are lined both sides with a minimum of 10 mm GIB® Standard plasterboard fixed in the nominal GIB® Site Guide pattern. The accumulated length is then entered in the bracing resistance calculations. Bathroom walls and walls with significant openings are not added to the accumulated length.

In this case the Building Official should be able to take the design redundancy into account, ensure internal walls lined both sides are generally fixed in accordance with the standard GIB® Site Guide GS2-NOM pattern, and focus more specifically on critical elements around the building perimeter.

FIGURE 2: DESIGN APPROACH 1– BRACING LAYOUT PLAN

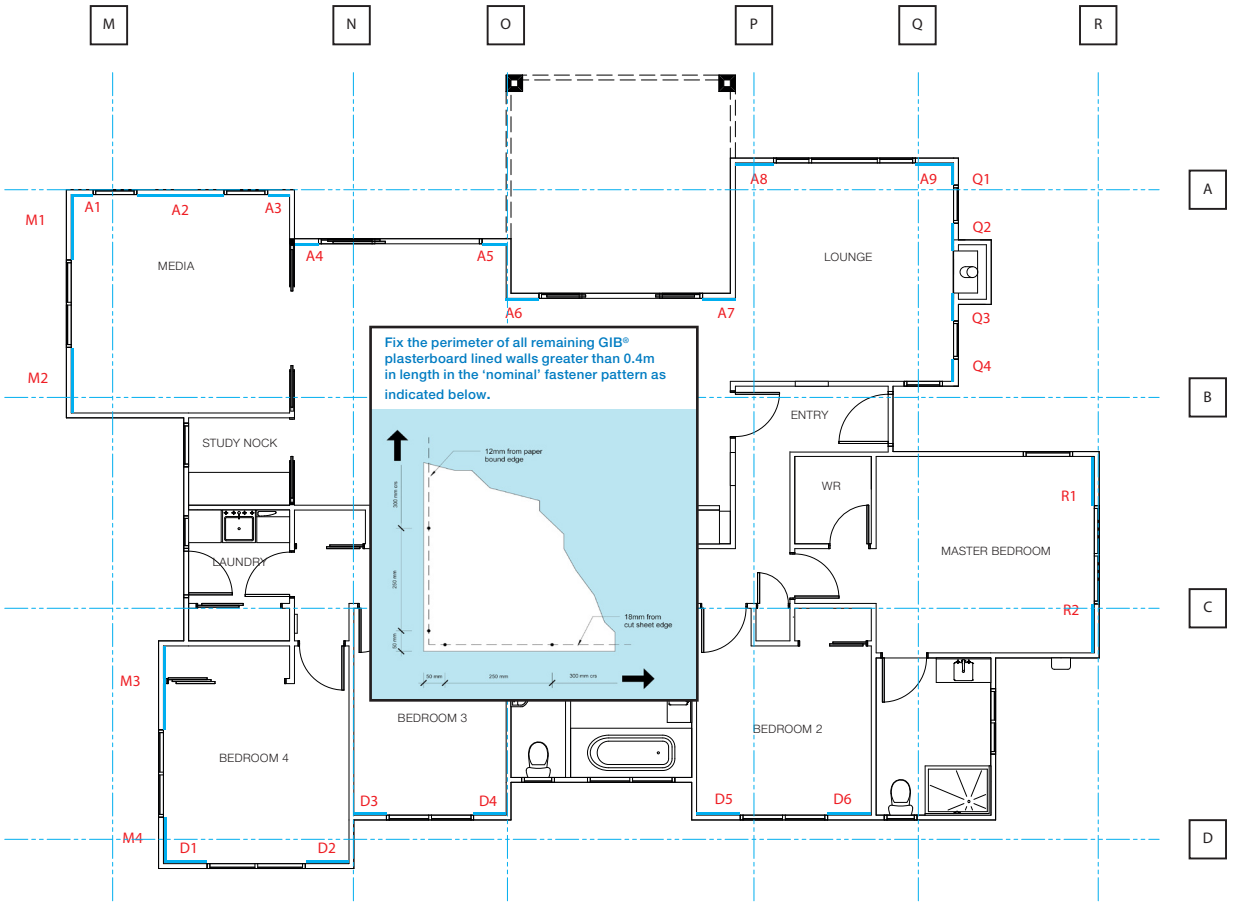

This design considers the inherent bracing provided by the structure and tops up with designated bracing elements where required. To avoid any potential for miscommunication and delays onsite during construction and inspection, designers should clearly note the intent to use standard GIB® Site Guide GS2-NOM fixing on bracing plans.

KDC - Approved Building Consent Document - BC210441 - Pg 10 of 336 - 30/08/2021 - ComplyNZ

FIGURE 3: DESIGN APPROACH 1 - BRACING RESISTANCE CALCULATIONS INCLUDING GS2-NOM

Single Level Along Resistance Sheet

Job Name:

									Wind	EQ
									Demand	
									624	712
									Achieved	
Line	Element	Length (m)	Angle (degrees)	Stud Ht. (m)	Type	Supplier	Wind (BUs)	EQ (BUs)	992 159%	976 137%
A	1	0.40		2.4	GS1-N	GIB®	21	23		
	2	1.60		2.4	GS1-N	GIB®	110	96		
	3	0.40		2.4	GS1-N	GIB®	21	23		
	4	0.50		2.4	GS1-N	GIB®	28	29		
	5	0.50		2.4	GS1-N	GIB®	28	29		
	6	0.70		2.4	GS1-N	GIB®	41	41		
	7	0.70		2.4	GS1-N	GIB®	41	41		
	8	0.80		2.4	GS1-N	GIB®	49	47		
	9	0.80		2.4	GS1-N	GIB®	49	47		
	External Length = 15								388 OK	377 OK
B	1	1.60		2.4	GS2-NOM	GIB®	80	80		
	2	1.60		2.4	GS2-NOM	GIB®	80	80		
									160 OK	160 OK
C	1	1.80		2.4	GS2-NOM	GIB®	90	90		
	2	1.80		2.4	GS2-NOM	GIB®	90	90		
									180 OK	180 OK
D	1	0.80		2.4	GS1-N	GIB®	49	47		
	2	0.80		2.4	GS1-N	GIB®	49	47		
	3	0.60		2.4	GS1-N	GIB®	34	35		
	4	0.60		2.4	GS1-N	GIB®	34	35		
	5	0.80		2.4	GS1-N	GIB®	49	47		
	6	0.80		2.4	GS1-N	GIB®	49	47		
	External Length = 15								264 OK	259 OK

Single Level Across Resistance Sheet

Job Name:

									Wind	EQ
									Demand	
									785	712
									Achieved	
Line	Element	Length (m)	Angle (degrees)	Stud Ht. (m)	Type	Supplier	Wind (BUs)	EQ (BUs)	1155 147%	1103 155%
M	1	1.30		2.4	GS1-N	GIB®	90	78		
	2	1.30		2.4	GS1-N	GIB®	90	78		
	3	1.60		2.4	GS1-N	GIB®	110	96		
	4	0.90		2.4	GS1-N	GIB®	57	53		
	External Length = 12								347 OK	305 OK
N	1	3.20		2.4	GS2-NOM	GIB®	160	160		
									160 OK	160 OK
O	1	3.20		2.4	GS2-NOM	GIB®	160	160		
									160 OK	160 OK
P	1	2.00		2.4	GS2-NOM	GIB®	100	100		
									100 OK	100 OK
Q	1	0.40		2.4	GS1-N	GIB®	21	23		
	2	0.40		2.4	GS1-N	GIB®	21	23		
	3	0.40		2.4	GS1-N	GIB®	21	23		
	4	0.40		2.4	GS1-N	GIB®	21	23		
	5	2.00		2.4	GS2-NOM	GIB®	100	100		
									185 OK	193 OK
R	1	0.90		2.4	BL1-H	GIB®	102	92		
	2	0.90		2.4	BL1-H	GIB®	102	92		
	External Length = 12								204 OK	185 OK

KDC - Approved Building Consent Document - BC210441 - Pg 11 of 336 - 30/08/2021 - ComplyNZ

GS2-NOM - DESIGN APPROACH 2

The design approach in Figure 4 below shows designated bracing elements GS1-N and BL1-H used around the perimeter of the house. Standard GIB® Site Guide fixing is used on internal walls lined both sides. Specific sections of these internal walls are nominated as GS2-NOM bracing elements, sufficient to meet or exceed the minimum bracing demand on the particular bracing grid line.

In this case GS2-NOM is used as a conventional bracing element. This method might be preferred by some designers, builders and building officials as it represents a more traditional approach to bracing resistance calculations and construction and permits focus on designated elements.

The outcome in terms of number of fastener is the same as that achieved with DESIGN APPROACH 1 where the fastener count could have increased by 500 screws if GS1-N or GS2-N designated internal bracing elements had been used in place of GS2-NOM.

In this case the calculations show how GS2-NOM is used as an orthodox bracing element and the building consent and inspection processes are also conventional. Given the many internal walls not counted in this case, it is still suggested that inspection focus should be more specifically on critical elements around the building perimeter.

FIGURE 4: DESIGN APPROACH 2 – BRACING LAYOUT PLAN

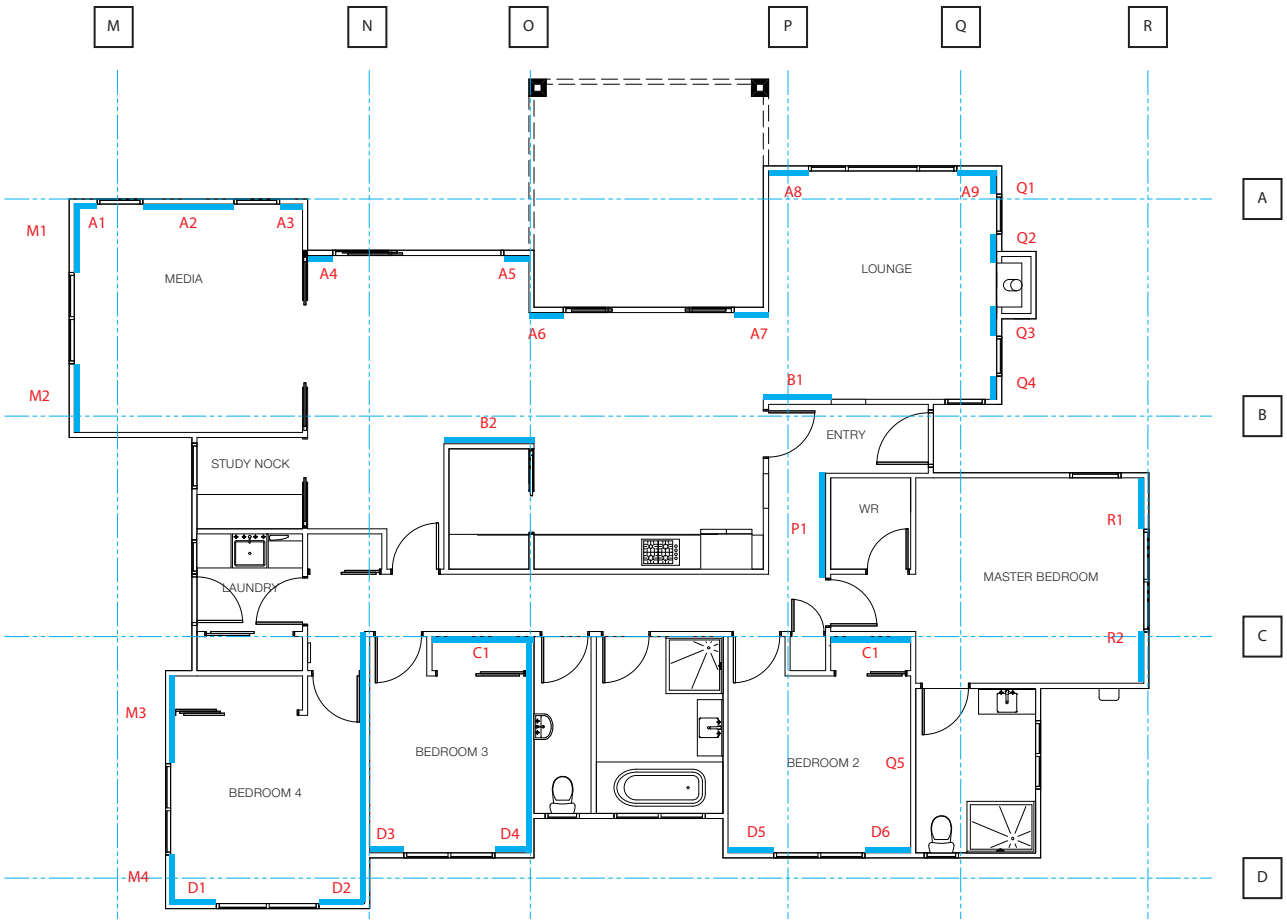

This design uses GS2-NOM as a conventional bracing element and designers should clearly identify designated elements on the bracing plan. Not counted internal walls fastened in the standard GIB® Site Guide pattern add further redundancy.

FIGURE 4: DESIGN APPROACH 2 – BRACING LAYOUT PLAN

KDC - Approved Building Consent Document - BC210441 - Pg 12 of 336 - 30/08/2021 - ComplyNZ

Single Level Along Resistance Sheet

Job Name:

									Wind	EQ
									Demand	
									624	712
									Achieved	
Line	Element	Length (m)	Angle (degrees)	Stud Ht. (m)	Type	Supplier	Wind (BUs)	EQ (BUs)	1152 185%	1136 160%
A	1	0.40		2.4	GS1-N	GIB®	21	23		
	2	1.60		2.4	GS1-N	GIB®	110	96		
	3	0.40		2.4	GS1-N	GIB®	21	23		
	4	0.50		2.4	GS1-N	GIB®	28	29		
	5	0.50		2.4	GS1-N	GIB®	28	29		
	6	0.70		2.4	GS1-N	GIB®	41	41		
	7	0.70		2.4	GS1-N	GIB®	41	41		
	8	0.80		2.4	GS1-N	GIB®	49	47		
	9	0.80		2.4	GS1-N	GIB®	49	47		
	External Length = 15								388 OK	377 OK
B	1	5.00		2.4	GS2-NOM	GIB®	250	250		
									250 OK	250 OK
C	1	5.00		2.4	GS2-NOM	GIB®	250	250		
									250 OK	250 OK
D	1	0.80		2.4	GS1-N	GIB®	49	47		
	2	0.80		2.4	GS1-N	GIB®	49	47		
	3	0.60		2.4	GS1-N	GIB®	34	35		
	4	0.60		2.4	GS1-N	GIB®	34	35		
	5	0.80		2.4	GS1-N	GIB®	49	47		
	6	0.80		2.4	GS1-N	GIB®	49	47		
	External Length = 15								264 OK	259 OK

Single Level Across Resistance Sheet

Job Name:

									Wind	EQ
									Demand	
									785	712
									Achieved	
Line	Element	Length (m)	Angle (degrees)	Stud Ht. (m)	Type	Supplier	Wind (BUs)	EQ (BUs)	1645 210%	1593 224%
M	1	1.30		2.4	GS1-N	GIB®	90	78		
	2	1.30		2.4	GS1-N	GIB®	90	78		
	3	1.60		2.4	GS1-N	GIB®	110	96		
	4	0.90		2.4	GS1-N	GIB®	57	53		
	External Length = 12								347 OK	305 OK
N	1	5.00		2.4	GS2-NOM	GIB®	250	250		
									250 OK	250 OK
O	1	5.00		2.4	GS2-NOM	GIB®	250	250		
									250 OK	250 OK
P	1	5.00		2.4	GS2-NOM	GIB®	250	250		
									250 OK	250 OK
Q	1	0.40		2.4	GS1-N	GIB®	21	23		
	2	0.40		2.4	GS1-N	GIB®	21	23		
	3	0.40		2.4	GS1-N	GIB®	21	23		
	4	0.40		2.4	GS1-N	GIB®	21	23		
	5	5.20		2.4	GS2-NOM	GIB®	260	260		
									345 OK	353 OK
R	1	0.90		2.4	BL1-H	GIB®	102	92		
	2	0.90		2.4	BL1-H	GIB®	102	92		
	External Length = 12								204 OK	185 OK

KDC - Approved Building Consent Document - BC210441 - Pg 13 of 336 - 30/08/2021 - ComplyNZ

GS2-NOM ADHESIVE FIXING OPTION AT REBATED JAMBS

When rebated jambs are used, GS2-NOM fastener numbers can be further reduced by using a continuous bead of GIBFix® All-Bond solvent-based adhesive on studs adjacent to the opening, as illustrated below. This method only applies to GS2-NOM fixing and not to other designated bracing elements.

If the adhesive fixing method is preferred, it is strongly recommended that it is discussed with the site building official at an early stage, prior to starting lining installation, so that an inspection and sign-off process can be agreed.

There should be ample opportunity to do this given that lining installation commences at an advanced stage of the project.

CLEAR COMMUNICATION BETWEEN THE DESIGNER, BUILDER AND BUILDING CONSENT AUTHORITY IS KEY!

A poor outcome would be when the designer and builder have elected to use the adhesive fixing method but have failed to advise the site building official prior to lining. If the building official has reservations about the application of adhesive, one of the following processes can be agreed;

A number of random core holes can be requested. They can be drilled with a small hole-saw in locations above openings as agreed between the building official and installer. If presence of GIB® All-Bond adhesive is evident it is at the building official's discretion to accept the installation 'on reasonable grounds'.

If the decision is made to reject the adhesive fixing method post-lining, screws can be installed in accordance with the Figure 1 GS2-NOM fixing pattern. If GIBFix® All-Bond adhesive has been used it is prudent to wait 7 days for the adhesive to fully cure before applying screws.

FIGURE 6: GS2-NOM SCREW AND GIBFIX® ALL-BOND FIXING FOR REBATED JAMBS

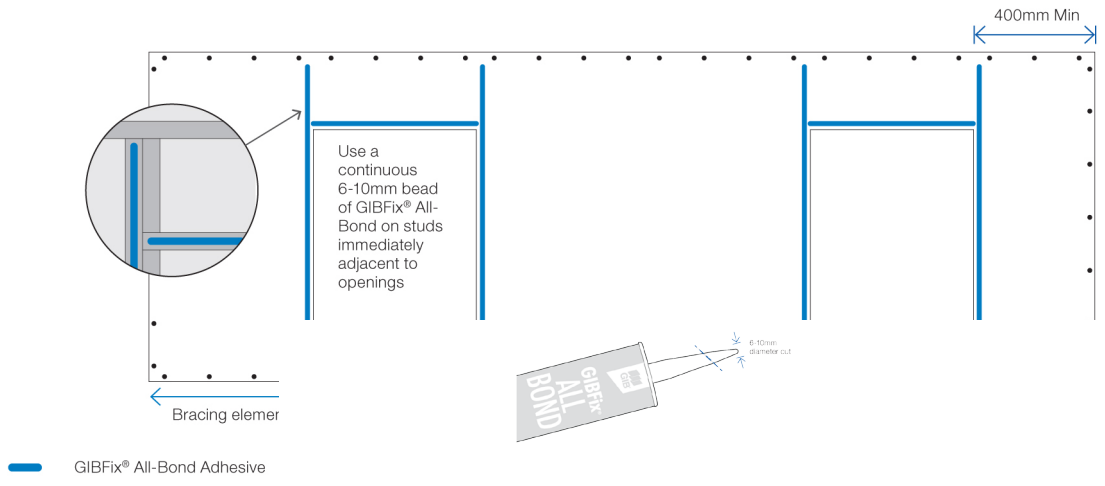

KDC - Approved Building Consent Document - BC210441 - Pg 14 of 336 - 30/08/2021 - ComplyNZ

SUMMARY GS2-NOM DESIGN, INSTALLATION AND INSPECTION

GS2-NOM

- GS2-NOM permits internal walls lined in accordance with standard GIB® Site Guide fixing to contribute to bracing resistance
- Using GS2-NOM can result in a significant reduction of screw fixings which in turn aids quality of finish
- Using GS2-NOM can result in a more uniform fastener pattern
- The decision to use GS2-NOM requires agreement between the various parties involved in the design and construction process
- Using GS2-NOM in calculations often results in designs with bracing resistance well exceeding bracing demand because most internal walls can be counted. In addition, conservative Bracing Unit ratings have been assigned to GS2-NOM in the GIB EzyBrace® Systems 2016 software.
- When inspecting GS2-NOM installations, the design margin should be taken into account
- When design margins are tight, focus should first be on bracing distribution and the design and construction of critical bracing elements, e.g. narrow panels adjacent to significant openings such as large windows, ranch sliders or garage doors.
- GS2-NOM specifies 300 mm maximum perimeter screw centres. Closer fixing is permitted.

GS2-NOM ADHESIVE FIXING OPTION

- If the GS2-NOM adhesive fixing method is preferred, prior communication between the contractor, installer, and building official is required. Installation of adhesive fixed GS2-NOM without prior consultation with the site building official is discouraged.
- The lining installer may wish to take a photographic record of the installation. However, acceptance depends on the practices adopted by the particular Building Control Authority and prior communication is once again recommended.
- If adhesive fixed GS2-NOM has been installed without prior consultation with the site building official, random core holes can be drilled to determine the presence of adhesive and establish‘reasonable grounds’ for sign off. If required, installation of additional screws can be requested.

COMMUNICATION IS KEY WHEN DESIGNING AND INSPECTING BRACING, INCLUDING GS2-NOM FIXING.

PRODUCT SUBSTITUTION

- In order for GIB® systems to perform as tested, all components must be installed exactly as prescribed. Substituting components producesan entirely different system and may compromise performance. Follow system specifications.

TECHNICIAL MATERIAL & ASSISTANCE

Technical specification materials are available from www.gib.co.nz/ezybrace. Or call the GIB® Helpline 0800 100 442 for more information.

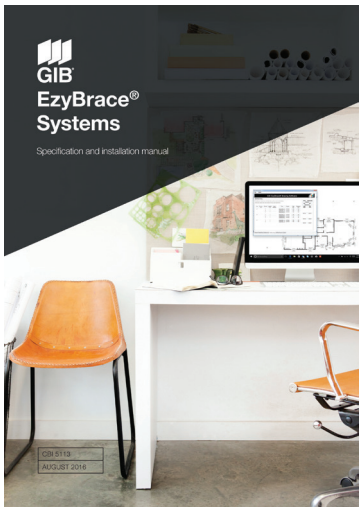

KDC - Approved Building Consent Document - BC210441 - Pg 15 of 336 - 30/08/2021 - ComplyNZ

Multi Layer Bracing Systems

Issue Date August 2016

In a two layer wall system such as GIB® Fire or Noise control systems, the plasterboard bracing element sheets can be either:

Applied directly to the framing, with fasteners set out as per the bracing instructions and a fastener length as per the system being installed. The inner layer can be left unstopped. Or,

Applied to the outer sheets with the outer layer fasteners being installed as per the bracing instructions and fastener length as per the system being installed.

The outer layer is to be tapped and stopped as per GIB® Site Guide.

When a GIB® Bracing element has been designated for a section of wall, BU ratings can not be increased by incorporating additional proprietary bracing elements within that same section of wall.

KDC - Approved Building Consent Document - BC210441 - Pg 16 of 336 - 30/08/2021 - ComplyNZ

GIB®

Wings, Blocks and Diaphragms

Issue Date April 2013

We are often asked if separate bracing calculation is required for 'wings' or 'blocks'.

NZS 3604:2011 paragraph 5.1.5 requires wings or blocks to 'provide sufficient bracing individually' if they extend more than 6 metres from main building. Note that this requirement refers to the provision of bracing, and that separate calculation is not mentioned as a requirement.

The intent of the clause is that provision of bracing is relative to floor area. In other words, if a wing represents 20% of the total building floor area, then at least 20% of the bracing demand must be provided in that wing. This can be achieved by separate calculation, but is often more readily achieved by treating the building as a single unit and simply ensuring bracing distribution is balanced and proportional to floor area.

Even when wings or blocks are at an angle to the main building, a single calculation can be carried out. NZS3604:2011 paragraph 5.4.4 gives guidance for walls at angles to the bracing grid and is intended for single or few individual walls. Wings or blocks at an angle are better treated separately or by 'stretching' the building along the ridge line for calculation purposes and treating it as a single rectangular structure. The angle to bracing line function in the GIB EzyBrace® calculation sheet does not need to be applied in this situation.

Using a 'stretched' rectangular design will deliver the same outcome as doing two separate calculations. Again the important issue is to ensure that bracing provision and distribution is proportional to floor area.

Calculating A and B separately give the same bracing demand as treating them as a single 'stretched' building. Ensure that bracing provision is proportional to floor area.

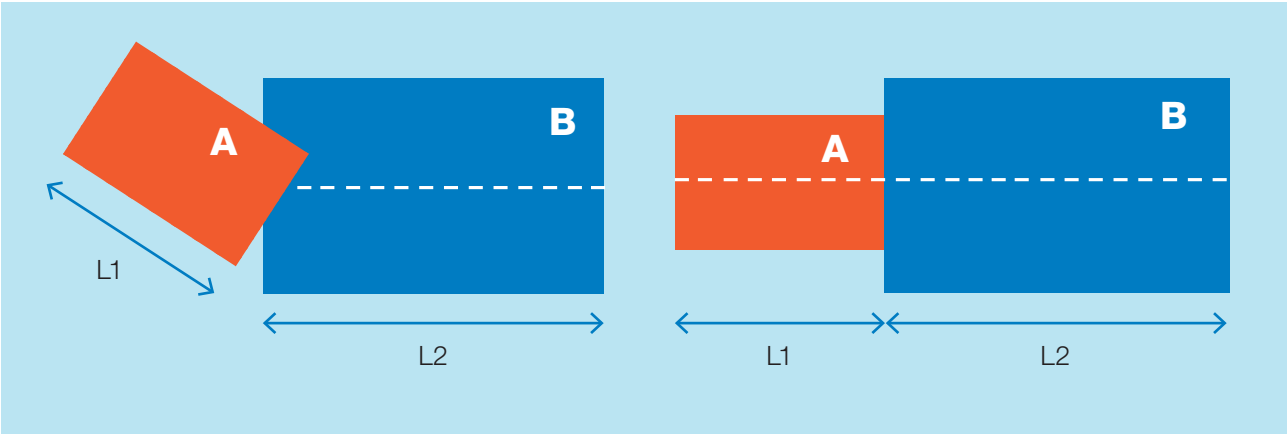

KDC - Approved Building Consent Document - BC210441 - Pg 17 of 336 - 30/08/2021 - ComplyNZ

The other frequently encountered bracing question relates to ceiling diaphragms and when they are required.

We often see diaphragms specified where they are not needed.

NZS3604:2011 paragraph 5.4.6 states that bracing lines 'shall not be at more than 6 m centres provided that there need be no bracing lines within the area covered by a diaphragm …' . The need for a diaphragm is thus determined by the spacing of bracing lines and not by the dimensions of a particular room.

The illustration below shows two designs incorporating a 8 x 6 m room. In one case NZS3604:2011 requires a ceiling diaphragm and in the other case it does not because bracing lines dissecting the room are spaced at less than 6 m.

A point to note is that the underlying NZS3604 assumption is that structural framing, such as trusses, rafters and their connections, provide support to the external wall (indicated by an arrow) back to the bracing grid. Use a ceiling diaphragm if there is any doubt whether such structural connections exist.

The 8 x 6m room on the left requires a ceiling diaphragm whilst the same size room on the right does not because bracing lines at less than 6m dissect the space.

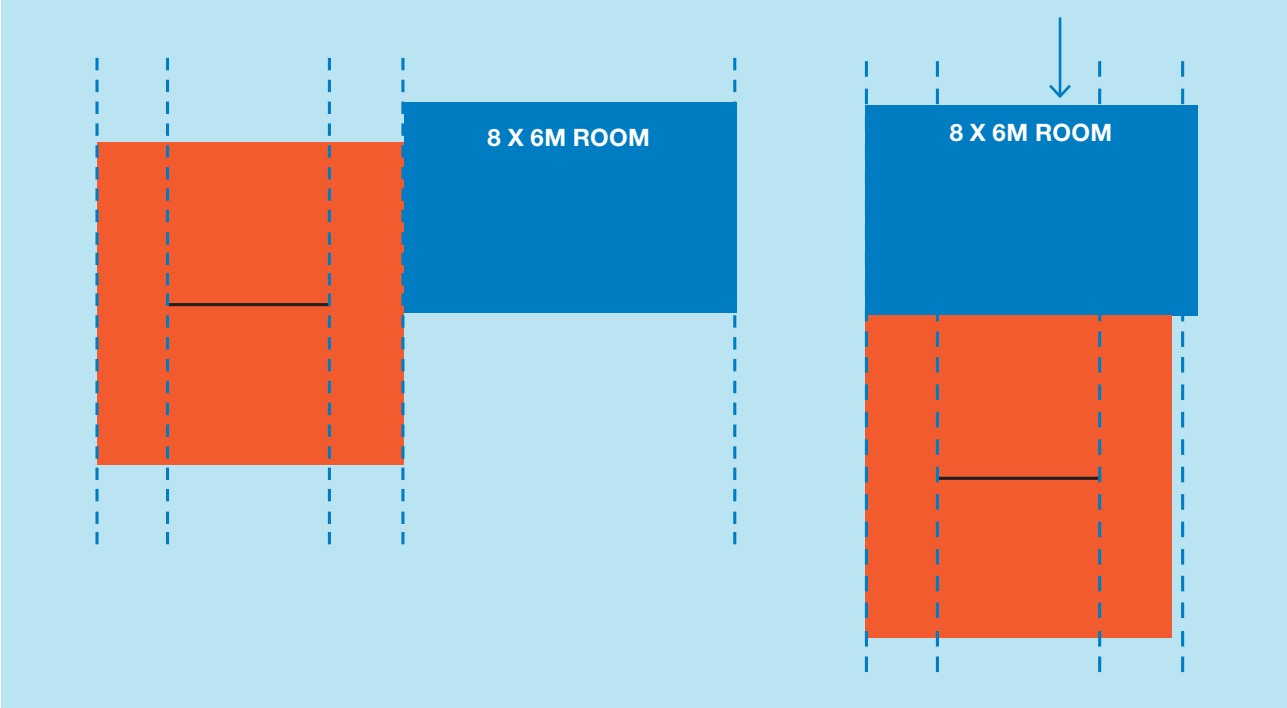

KDC - Approved Building Consent Document - BC210441 - Pg 18 of 336 - 30/08/2021 - ComplyNZ

Low damage solutions for non-structural elements

Issue Date July 2012

Over the past 12 months Winstone Wallboards has been working closely with the engineering faculty at the University of Canterbury to develop improved systems for interior linings within commercial buildings.

Following the Canterbury earthquakes, many commercial buildings have suffered significant damage. As widely reported most high rise buildings in the Christchurch CBD have been, or are being, deconstructed. The many low-to-medium rise buildings that survived have often suffered significant damage to non-structural elements such as internal partitions and ceilings. Damage to these elements has generally been more costly than damage to the structure itself. Damage to non-structural elements also causes significant business disruption, either directly or during the repair process.

Non-structural ceilings and partitions are commonly lined with gypsum plasterboard and the owner's preference, often guided by the specifier, is more often than not for a flush monolithic finish. Expansive wall and ceiling areas are flush-finished and corners at wall and wall-to-ceiling intersections are typically square stopped. Non-structural elements tend to be tightly fitted into the main structure. Once taped and stopped, gypsum plasterboard lined walls and ceilings are very stiff. When locked into the main structure these elements do not have the ability to follow expected structural movement and 'inter-storey drifts' that occur during serviceability and design level earthquakes.

As a result non-structural elements can suffer significant damage. This has been evident in Christchurch and even after re-fixing, plasterstopping and painting, damage has repeated following further aftershocks.

Testing at Canterbury University has shown that 'low damage' solutions can be achieved by simply incorporating regular control joints. Negative details at wall junctions and intersections with the main structure, and breaking up expansive areas with regular control joints, will provide freedom for the non-structural elements to accommodate movements of the main structure.

Testing rig at University of Canterbury



KDC - Approved Building Consent Document - BC210441 - Pg 19 of 336 - 30/08/2021 - ComplyNZ

Comments from the researchers include;

"The details work astonishingly well. Partitions stay flawless till 2.0% drift"

"Even at triple the current serviceability requirements, damage was minimal or in serviceable condition"

"Gaps can be arranged by simple calculation with a very high precision"

"Gaps can easily be made aesthetically pleasing or hidden with trim finishes"

"This cannot be achieved with existing monolithic finish practices"

Recommended details are as simple as they are effective, but a shift in owner and architectural expectation is required to make them work. The challenge to the architectural profession is to incorporate and 'celebrate' these expressed details if we are to have 'low' or 'no damage' solutions for non-structural elements in seismic zones.

For further information contact the GIB® Technical Helpline 0800 100 442. A detailed information bulletin is being prepared and will be available shortly.

Control joint illustrations from GIB® Fire Rated Systems 2006

Fire Rated Walls – Steel Frame

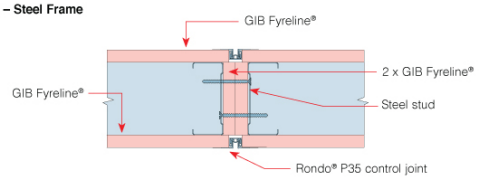

Fire Rated Walls – Timber Frame

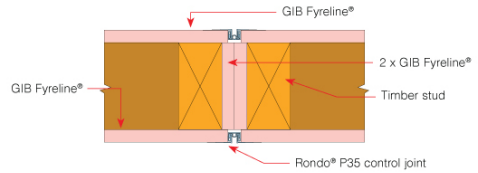

Fire Rated Floor/Ceiling

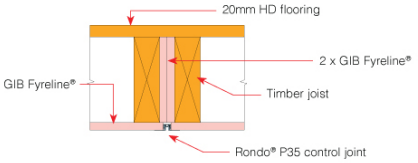

Fire Rated Floor/Ceiling

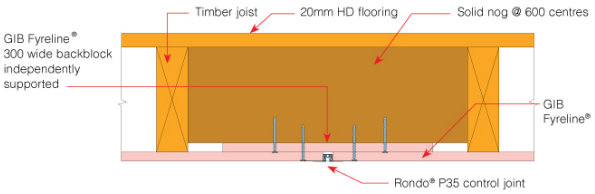

KDC - Approved Building Consent Document - BC210441 - Pg 20 of 336 - 30/08/2021 - ComplyNZ

GIB®

Canterbury Earthquake Online Guidelines

Issue Date March 2012

A series of possible details to provide freedom of movement & reduce earthquake damage to non-structural linings.

New updated Technical Bulletins can now be viewed at www.gib.co.nz/canterburyearthquake. These include guidelines for the damage assessment and repair of plasterboard linings in earthquake damaged properties. Guidance is also available for the repair of lath and plaster linings, and for the design of supplementary bracing using other sheet materials.

We must remember that the Canterbury earthquakes are structural events that test a building's bracing system in real life. Before committing to repairs it is essential to assess and reinstate where necessary, the structure's resistance to possible future events. Failure to do so can result in repeated damage and the need for ongoing repairs. Keep an eye out for updates on our website. Within the near future we will be launching a simple 'bracing assessment' tool aimed at assisting assessors, designers, and builders with evaluating structural adequacy of houses.

We have also posted a paper by our engineers Hans Gerlich and Richard Hunt summarising their observations relating to the performance of houses in and around Christchurch. In low-rise timber or steel framed buildings plasterboard linings will attract earthquake forces first and must be designed to resist them.

In commercial buildings, gypsum plasterboard linings obviously cannot be designed to resist forces resulting from imposed lateral movements of the main structure during a design level earthquake (see below).

Gypsum plasterboard linings in a commercial building being severely damaged and forced off the wall framing by structural movement



Where gypsum plasterboard cannot be expected to resist such forces, a degree of freedom must be provided. The illustrations below show the principles of control and movements joints which can be easily incorporated in partition designs (whilst maintaining other performance attributes such as fire resistance or noise control).

Unfortunately architectural trends and owner requirements often dictate that walls are finished flush with a minimum of visual interruptions. A change in aesthetic design and acceptability of such details is required if we are to minimise post-earthquake damage in commercial structures.

KDC - Approved Building Consent Document - BC210441 - Pg 21 of 336 - 30/08/2021 - ComplyNZ

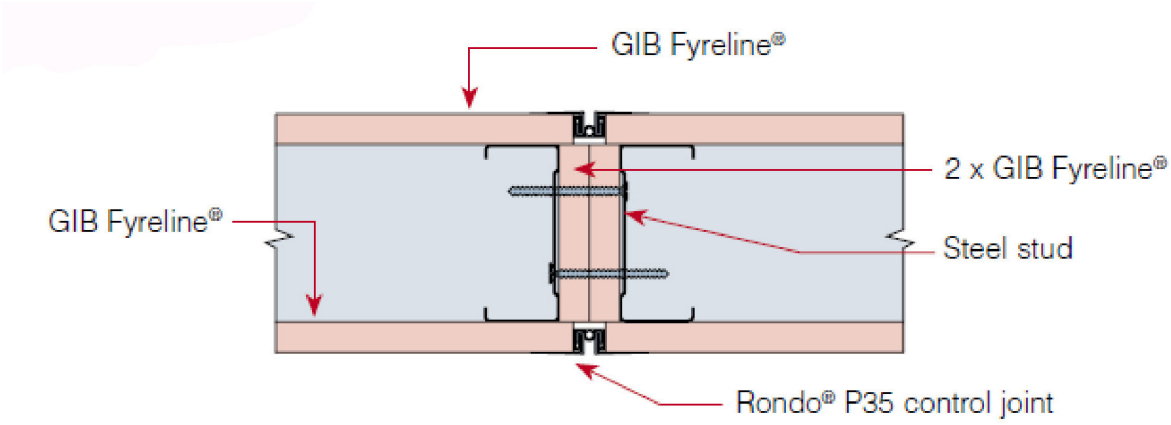

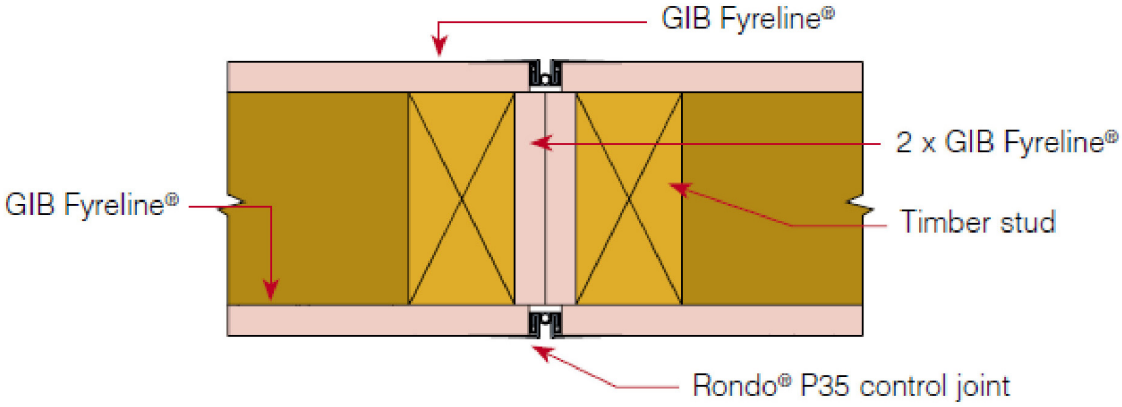

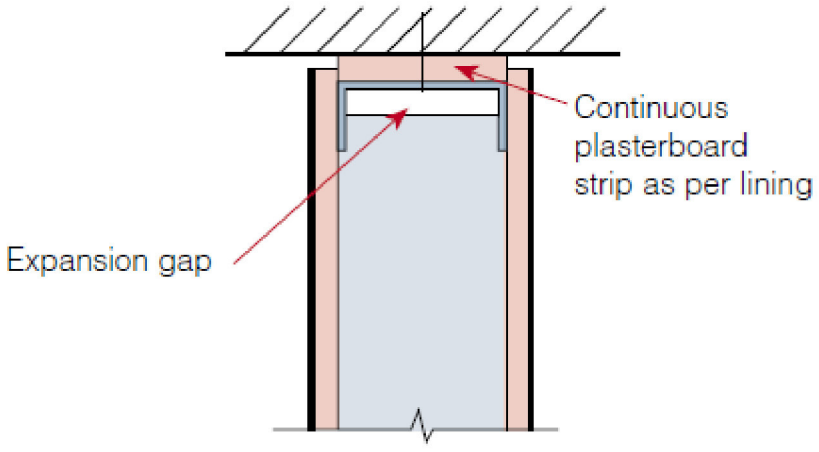

KDC - Approved Building Consent Document - BC210441 - Pg 22 of 336 - 30/08/2021 - ComplyNZ

Bracing light timber framed buildings using sheet materials

Issue Date November 2011

BRACING UNITS

Bracing Units (BUs) were introduced for use with NZS3604 in the late 1970s in recognition of the contribution sheet linings and claddings make to the bracing resistance of light timber framed structures. A 2.4 m high by 2.4 m long wall, with a cut-in metal angle brace and gypsum plasterboard on one face, was tested and achieved a bracing resistance of 5 kN (approximately 500 kg). This was defined as 100 BUs (or 42 BU/m).

Since then the bracing rating (BU/m) for many proprietary systems have been established using the BRANZ P21 Wall Bracing Test and Evaluation Procedure.

The approach adopted by NZS3604 aims to achieve bracing resistance by evenly distributing moderately rated bracing elements throughout the structure. The sum total of these BUs must exceed the design wind and earthquake forces (the demand).

DISTRIBUTION

The NZS3604 rules regarding bracing distribution have been tightened in 2011, but they are still minimum guidelines. It is the responsibility of the building designer to ensure even distribution of bracing and to seek professional engineering input in case of any doubt.

“Lop-sided” distribution can result in irregular response to wind and earthquake forces causing unpredictable damage.

COMBINING DIFFERENT SHEET MATERIALS

Different sheet materials bring different attributes. The internal gypsum plasterboard lining system is inevitably very stiff once sheets are interconnected, taped and stopped. However, gypsum plasterboard bracing is less ductile than structural plywood sheet bracing.

Structural plywood sheet bracing, installed on the outside of external framing, provides excellent ductility but offers less stiffness than plasterboard.

Whether we like it or not, the internal plasterboard linings will attract wind and earthquake forces first before they can be transmitted to other more flexible bracing systems. If we do not design plasterboard linings to accept these forces, then we can expect more damage than might otherwise be the case. The Canterbury earthquakes have shown plasterboard failures to be far more extensive when internal linings were poorly or not designed and installed to withstand earthquake forces.

To help illustrate this principle imagine a length of rubber band (ductile plywood bracing) and a similar length of string (stiff gypsum plasterboard bracing) both capable of supporting a certain weight (the bracing demand). The rubber band stretches considerably when the weight is applied. However, there is minimal stretch when the same weight is supported by the string.

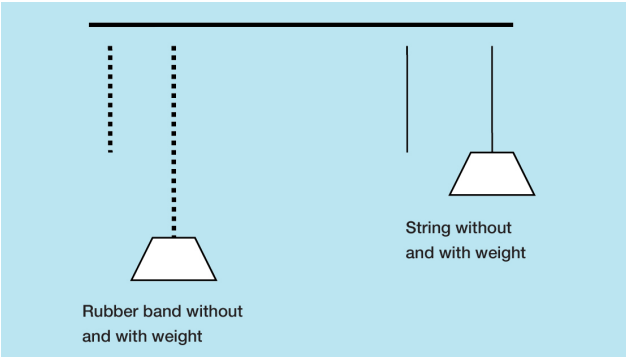

KDC - Approved Building Consent Document - BC210441 - Pg 23 of 336 - 30/08/2021 - ComplyNZ

If we use the rubber band and string together to support the weight then the string does most of the work and needs to break before weight is transferred to the rubber band as illustrated below.

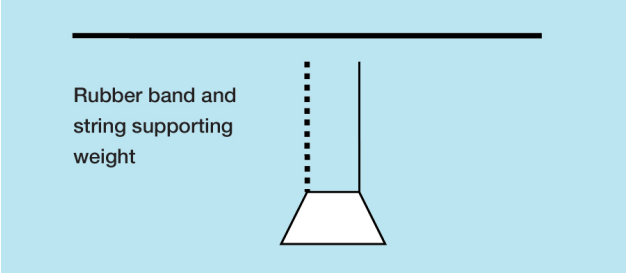

Now what happens when we apply these principles to buildings and do not design the stiffer element (gypsum plasterboard) to resist the full design wind and earthquake forces? In other words, what if the rubber band (plywood) has been designed to accept the bracing demand but the string (gypsum plasterboard) has only nominal fixings?

At frequent “serviceability” winds and small earthquake forces the string will perform as illustrated above.

However when forces approach “ultimate” design demand, the string will suffer damage or break before forces are transferred to the rubber band. So, although the plywood is likely to offer structural stability and protection from catastrophic failure well past design loads, the gypsum plasterboard lining system will suffer significant damage.

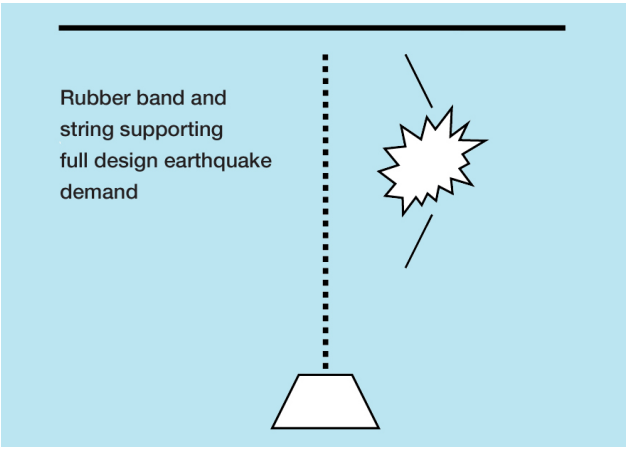

CONCLUSIONS

Sheet materials provide the most effective means of achieving bracing resistance in light timber framed structures such as houses.

The internal gypsum plasterboard lining system is the stiffest structural element in light timber framed structures and will attract design wind and earthquake forces first. Gypsum plasterboard linings must be designed and fixed to resist these forces regardless of whether supplementary bracing, such as structural plywood, is installed.

Discretionary use of high performance sheet materials such as structural plywood provides added ductility to enhance protection of structures against catastrophic failure.

The combination of gypsum plasterboard and structural plywood provides early strength and stiffness at design level events and added ductility when structures are subjected to even greater wind or earthquake actions.

Using a more flexible bracing system alone, based on multiple individual sheets or discrete length panels, and not fixing internal gypsum plasterboard linings to withstand wind and earthquake forces, is likely to result in significantly greater internal lining damage during a design and even more frequent serviceability events.

The best bracing system relies on a combination of internal gypsum plasterboard linings and plywood sheet bracing.Plasterboard provides strength and stiffness and plywood adds strength and ductility. To minimise damage during serviceability and ultimate design events, design plasterboard bracing to accept the full design demand and supplement with structural plywood for added strength and ductility as desired. Winstone Wallboards and Carter Holt Harvey publish combined GIB® / Ecoply® bracing systems where both the gypsum plasterboard and structural plywood are installed as a bracing element.

KDC - Approved Building Consent Document - BC210441 - Pg 24 of 336 - 30/08/2021 - ComplyNZ

GIB®

Distribution of Wall Bracing Elements

Issue Date November 2011

Distribute bracing by drawing a grid pattern of bracing lines along and across the building. Bracing lines must coincide as much as possible with wall bracing elements.

Pairs of bracing elements may be counted on a single line provided they are no more than 2m apart as illustrated below. Locate wall bracing elements evenly throughout the building and as close as practical to corners of external walls.

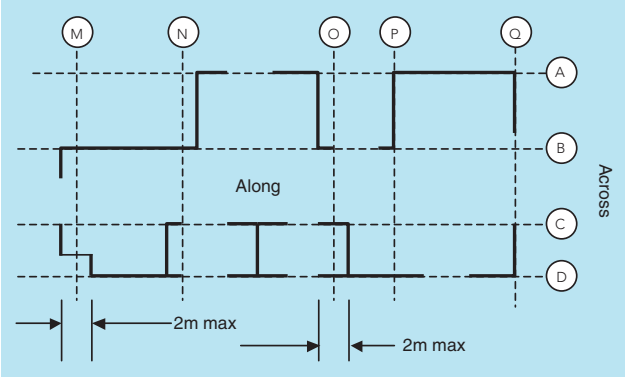

Bracing lines must be spaced no more than;

- 6m for standard construction with any GIB® plasterboard ceiling, or
- 7.5m where dragon ties in accordance with NZS 3604:2011 have been installed to provide lateral strength to walls, or
- 12m with a GIB® plasterboard ceiling diaphragm, constructed in accordance with this publication. (Refer to the GIB® Ceiling Diaphragms technical note).

No bracing line shall have a capacity less than the greater of 100 bracing units or 50% of the total bracing demand

(D) divided by the number of bracing lines (n) in the direction being considered (0.5 x D/n).

For this purpose bracing lines less than 1m apart shall be considered one line.

For example, if the bracing demand for the building shown in the diagram above is 2,500 BUs (Wind) and 2,000 BUs

(Earthquake) in the across direction (M, N, O, P, Q) each line must each have at least the maximum of 0.5 x 2,500 /5 = 250 BUs (Wind) and 0.5 x 2,000 /5 = 200 BUs (Earthquake).

In addition external walls shall have a bracing capacity no less than 15 bracing units per metre of external wall length.

Wall bracing elements on timber floors shall not be rated higher than 120 BU/m.

Wall bracing elements on concrete floors shall not be rated higher than 150 BU/m.

KDC - Approved Building Consent Document - BC210441 - Pg 25 of 336 - 30/08/2021 - ComplyNZ

GIB® Designing Bracing Upgrades

Issue Date June 2011

Following the earthquake events in Christchurch homeowners may be looking for additional bracing performance.

As the New Zealand Building Code is based on a minimum requirement, customers may decide to specify above this level. This bulletin has been created to assist designers with upgrading bracing resistance using GIB EzyBrace® , for buildings that fall within the design scope of NZS 3604:2011.

PROBABILITY OF EXCEEDANCE AND BRACING RESISTANCE

The New Zealand Building Code requirements for Earthquake Bracing design are based on the probability that a certain design event is exceeded, as illustrated below.

Annual Probability of Exceedance	Return Period Factor for Specific Design[1]
Once in 500 years or 1/500	1.0
Once in 1000 years or 1/1000	1.3
Once in 2500 years or 1/2500	1.8

[1] Equivalent Static Method of NZS1170.5:2004 compared with the GIB EzyBrace® software

An earthquake with a probability of being exceeded once in 2500 years is much more severe than one with a 1/500 year probability of exceedance. Most residential buildings, such as those constructed in accordance with NZS 3604:2011, are required to meet a minimum 1/500 annual probability of exceedance, assuming a 50 year life expectancy. When a residential home is designed for a 100 year life expectancy, the required earthquake design period is 1/1000.

Multi-tenanted and public buildings such as hotels, apartments, offices, schools, medical centres, etc. can often be built to NZS 3604:2011 but commonly need to be designed for a different annual probability of exceedance ranging from 1/500 to 1/2500, depending on importance level and design working life.

To place some perspective, analysis of the information from the 22nd February Christchurch earthquake indicates that this event was close to the 1/2500 annual probability of exceedance.

UPGRADING BRACING RESISTANCE USING GIB EZYBRACE®

GIB EzyBrace® systems have been tested and appraised to meet the requirements of the New Zealand Building Code using New Zealand Standard NZS 3604:2011 and the default setting for earthquake design is an annual probability of exceedance of 1/500.

The GIB EzyBrace® software now incorporates an easy way to design for increased bracing resistance by selecting an increased annual probability of exceedance level.

Simply select the annual probability of exceedance using the drop down box in the demand sheet. For a 1/1000 probability, the bracing requirement (demand) increases by 30% and for a 1/2500 probability, bracing demand increases by 80% when compared with the default 1/500 minimum annual probability of exceedance.

Wind Zone	High	Earthquake Zone	Soil Type
Select by Building Consent Authority Map		3 ▼	D&E (deep to very soft) ▼
or Preference	High ▼	Annual exceedance probability	
Wind region	Preference selected ▼	1/1000 (NZS3604:2011 x 1.3) ▼ *	
Lee Zone	Preference selected ▼	This design has been upgraded to resist	
Ground Roughness	Preference selected ▼	an annual earthquake exceedance	
Site Exposure	Preference selected ▼	probability of 1/1000	
Topographic Class	Preference selected ▼		

** Options include the default setting of 1/500, or increased annual probabilities of exceedance of 1/1000 or 1/2500*

When designing for increased bracing resistance a statement, similar to that below, should be highlighted on all bracing plans and associated information;

"The bracing design of this building has been upgraded at the clients request to exceed the requirements of a 1/[select] annual probability. This design must not be modified or substituted as this will affect the specified bracing performance of this building"

DESIGN ACROSS THE WHOLE BUILDING

As a general rule of thumb it is recommended to exceed the minimum bracing requirements by 10 to 20%. This means a target bracing resistance value of between 110 and 120%.

As is reflected in NZS 3604:2011 bracing should ideally be distributed evenly across the whole building and not just isolated to the external walls or building ends.

External walls generally only account for around 1/3 of the total bracing performance of a house. Therefore if bracing on the external walls is increased by say 30%, the actual improvement over the whole building is likely to be only 10% or less.

Also modifying plasterboard linings alone will often deliver limited improvement. To achieve a higher overall building performance, full bracing system specifications must be installed which often includes additional hardware such as panel hold-downs.

KDC - Approved Building Consent Document - BC210441 - Pg 26 of 336 - 30/08/2021 - ComplyNZ

WILEY GEOTECHNICAL

17 August 2021

Linda & David Kendall
linda.kendall@xtra.co.nz

RE: Geotechnical Investigation for Proposed Residence at Lot 81, The Sanctuary, Mangawhai.

Wiley Geotechnical Limited (WGL) was requested by Linda & David Kendall to provide a geotechnical investigation and guidance on foundation design for a proposed new build of a 3-bedroom dwelling and a pool. We have received and reviewed a site plan and a concept house design. We understand the dwelling is proposed to be constructed upon a concrete foundation. We have also received and reviewed the Engineering Suitability report by Hawthorn Geddes dated 12 July 2019.

WGL visited the site on and made the following observations:

- The site is located on a section sloping to the west at 12 degrees, and is currently grassed with an olive grove.
- A stormwater culvert is located at the southern end of the house, at the roadside boundary.
- A cut off drain is required behind the house, on the upper part of the slope.
- The building platform for the dwelling has not been formed.
- No obvious signs of instability were noted.
- Two hand augers and Four Scala Penetrometer (Scala) test were undertaken within potentially suitable building sites to a maximum depth of 3 m below ground level.

Geology

The GNS map for the site indicates that it is underlain by sedimentary rocks of the Pakiri Formation (Waitemata Group) (PF) comprising “alternating thick-bedded, volcanic rich, graded sandstone and siltstone with volcaniclastic grit beds.”

Seismic Hazards

Since there are no known active faults crossing the property, it is our opinion that ground rupture is unlikely at the subject property. Granular soils, such as sand, are susceptible to liquefaction in the event of future earthquakes. This may result in settlement or lateral deformation. Based on the regional earthquake risk (discussed further below) and depth to groundwater, it is our opinion that there is a relatively low risk of liquefaction induced settlement or lateral movement such that specific liquefaction design is not required.

We recommend that the future structures and improvements are designed to account for seismic shaking and ground motions. For seismic design at the site and in line with NZS 1170.5:2004 the corresponding design peak ground accelerations (PGA) for the site have been calculated from NZS 1170.5:2004 using the recommendations of the New Zealand Geotechnical Society as follows:

KDC - Approved Building Consent Document - BC210441 - Pg 27 of 336 - 30/08/2021 - ComplyNZ

KDC - Approved Building Consent Document - BC210441 - Pg 28 of 336 - 30/08/2021 - ComplyNZ

a_h = Z R C

In which:

Z = base PGA called “Hazard factor” and is given by Table 3.3 and Figures 3.3 and 3.4 of NZS 1170.5:2004. Z = 0.13 for areas north of Auckland.

R = “Return period factor” and is given by Table 3.5 of NZS 1170.5:2004 (R = 1.0 for 500 year return period and R = 0.25 for a 25 year return period)

C = Site response factor called “Spectral shape factor” in NZS 1170.5:2004 and is based on the seismic site classification. We consider this site to be **Class C**, based on soil depth and therefore C = 1.33.

The design PGA at the site is given as:

ULS: a_h = 0.13 x 1.00 x 1.33 = 0.17 (i.e. PGA = 0.17 g)

SLS: a_h = 0.13 x 0.25 x 1.33 = 0.04 (i.e. PGA = 0.04 g)

Field Exploration and Subsurface Conditions

WGL carried out a shallow subsurface investigation consisting of two hand augers with shear vane testing and four Scala Penetrometer (Scala) tests within the approximate areas shown on the site plan below.

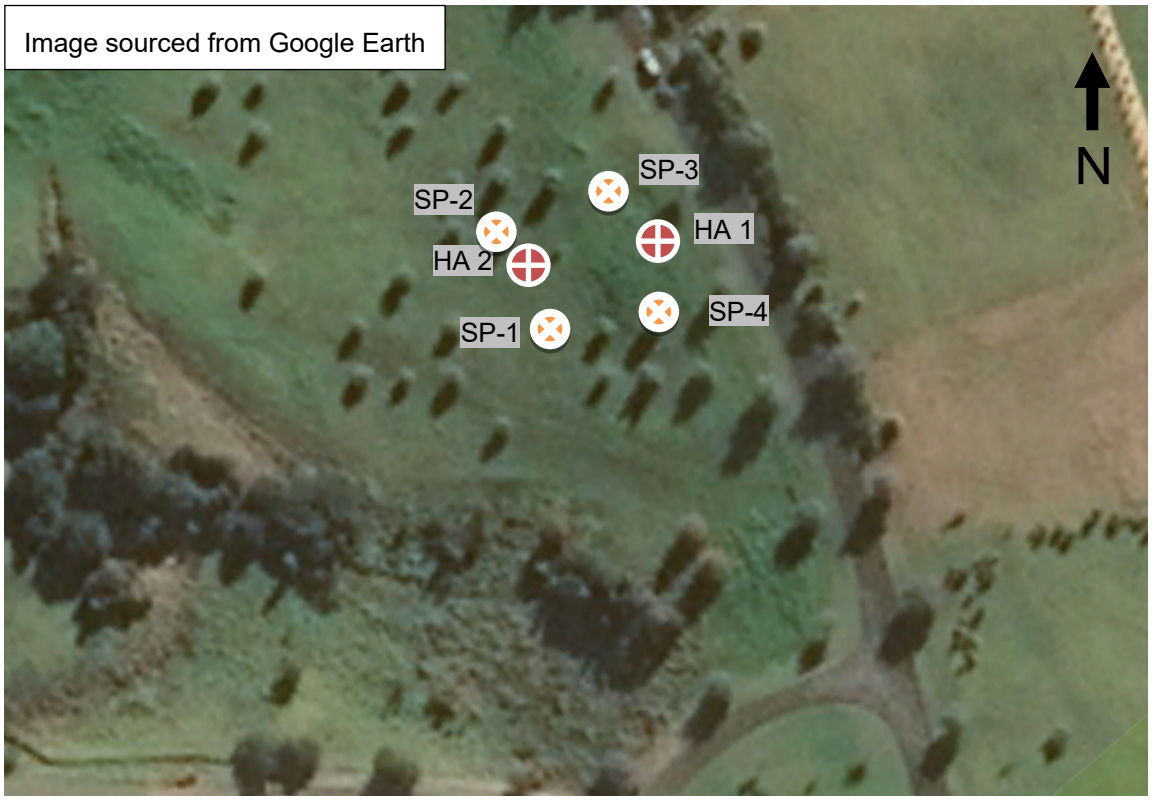

Figure 1: Approximate Subsurface Exploration Locations

KDC - Approved Building Consent Document - BC210441 - Pg 29 of 336 - 30/08/2021 - ComplyNZ

The hand augers were carried out to depths of 2.1 and 3.0 m. The subsurface material encountered in our hand auger investigation generally consisted of topsoil underlain by slightly clayey, slightly sandy silt with orange brown staining. Desiccation cracking was observed up to 0.7 m depth. Alternating layers of light grey slightly sandy silt, and light brown/orange brown moderately clayey silt were encountered from about 1.0 and 1.5 m. The measured undrained shear strengths generally all exceeded 100 kPa. The results of the individual Scala tests are shown below.

Groundwater was not encountered during our testing. The groundwater level may vary from the depth measured at the time of exploration, as a result of seasonal change, recent precipitation and/or irrigation practices.

Based on this, it is our opinion that the material encountered in our subsurface investigation is broadly consistent with published geologic mapping. The bore logs are presented as an appendix to this report and are written in general accordance with the New Zealand Geotechnical Society field classification guidelines (NZGS, 2005).

Scala Results

Scala blows/100mm at Lot 81, The Sanctuary, Mangawhai				
(m)	Scala 1 (SP1)	Scala 2 (SP2)	Scala 3 (SP3)	Scala 4 (SP4)
0.1	0	0	0	1
0.2	1	1	1	1
0.3	2	2	2	7
0.4	2	4	3	6
0.5	4	3	4	2
0.6	3	3	3	1
0.7	3	2	3	1
0.8	3	2	2	2
0.9	3	2	2	1

Expansive Soils

Expansive clay and silt soils are common in the wider Northland region and have the tendency to shrink and swell, particularly with seasonal fluctuations of soil water content. This behavior has implications for foundation design and surface structures and should be incorporated during foundation design.

Based on our visual and field assessment of the soils encountered onsite, and our experience in the area, we consider that the Expansive Site Class for this site is “M - moderate” - in accordance with AS 2870. Accordingly, the minimum footing depth is 600 mm below cleared ground level.

KDC - Approved Building Consent Document - BC210441 - Pg 30 of 336 - 30/08/2021 - ComplyNZ

Conclusions and Recommendations

It is our opinion that the proposed development is feasible from a geotechnical point of view, provided the recommendations presented in this report and standard development practices are incorporated in the design and construction of the project.

The soil underlying the site does **not** reach “good ground” in the upper metre as defined in NZS 3604 (2011) based on the Scala results as the requirement is 5 blows per 100 mm with a Scala Penetrometer; however the shear vane readings indicate a suitable bearing capacity is available for the proposed house, with readings generally greater than 100 kPa.

Earthworks

We recommend that the earthworks are undertaken by an experienced contractor familiar with the contents of this report and is experienced in these soils.

We consider that the vast majority of on-site soil material shall be suitable to be utilised as engineered fill supporting the proposed residential development. This is expected to primarily consist of silty clay soil and highly to completely weathered rock material. We recommend that all overlying topsoil and organic rich material is stripped and removed from the proposed cut areas prior to excavating the in-situ soil material. The excavated in-situ soil should be handled separately to the topsoil material. No topsoil should be used as, mixed with or remain below any engineered fill material. The cut excavation areas should be graded to allow the flow of stormwater away from the area. Suitable erosion and sediment control methodologies should be employed. Any sloping ground that is excavated into should be battered back to a slope of 3:1 (H:V). Once cut excavation are complete planting or regressing of the areas may have to be employed or long-term erosion and sediment control measures implemented. At this point we would envisage a maximum allowable slope of on-site engineered fill material being 3:1 (H:V), while imported engineered hardfill may be placed up to a maximum slope of 2:1 (H:V).

Concrete Foundation

We recommend a minimum 300 mm layer of compacted hard fill is placed for a waffle slab (i.e Firth Rib-Raft) which can be placed on top. The gravel raft should extend a minimum of 1 m beyond the building footprint. The construction of the gravel raft shall act as ground remediation so that the negative effects of expansive soil shall be negated so that a standard Rib-Raft foundation can be constructed upon it. This recommendation of ground remediation, covers specific engineering design input based on engineering principles and written by the Chartered Engineer authoring this report. Specific engineering design of the foundation is not required by a structural engineer, and therefore a PS1 not required. A waffle slab foundation design does not have any embedded structural elements and therefore the 600 mm embedment is not applicable in this instance. All topsoil and fill material must be removed before foundation construction commences.

We recommend the following regarding hard fill and its placement:

- Underslab hard fill comprising GAP40/GAP65, or an equivalent approved product, should be placed across the building platform in 100 mm lifts and compacted using appropriate compaction plant (e.g. a hand held or excavator mounted vibrating compaction plate), and brought up to the finished design levels. We would recommend a high quality gravel without too many fines.

KDC - Approved Building Consent Document - BC210441 - Pg 31 of 336 - 30/08/2021 - ComplyNZ

- For fills greater than 0.6 m. Every third layer of hard fill lift should be observed and tested by WGL to confirm that it has been placed to an appropriate specification. At this stage it is anticipated that compaction should be to achieve 95% of the maximum dry density (MDD) of the material, to be confirmed onsite using either a NDM (nuclear densometer) or Impact Hammer testing (Target 15 CBR).

A geotechnical ultimate bearing capacity of 300 kPa may be used in the design of a reinforced concrete slab or a waffle slab (i.e. Rib Raft). The ultimate bearing capacity should be available provided that the hard fill has been placed and certified according to the construction specification. We recommend WGL, or a qualified geotechnical engineer, inspect any excavations prior to the placing of any fill or foundation elements.

Pile Foundation

It is our opinion that wooden piles designed in accordance with NZS3604 (2011) will provide a suitable foundation for the proposed dwelling. We recommend all piles are H5 treated and have a minimum 125 x 125 mm dimensions. We recommend that anchor piles are embedded to a minimum depth of 0.9 m, and all other piles are embedded to a minimum depth of 0.6 m. Pile holes should be bored with a minimum diameter of 400 mm. These recommendations form specific engineering design input and therefore specific design b y a structural engineer is not required based on the propose embedment depths and allowed bearing capacity outlined below.

The piles should meet NZS3640 Class H5, and cut surfaces should be retreated with a protective coating in accordance with the manufacturer's recommendations. The pole length should be sufficient to extend to the design foundation level, and provide the stick-up length necessary for the super-structure and planned floor levels. Piles should not be spliced.

All bored holes should be inspected by WGL, or a qualified geotechnical engineer, prior to continuing with foundation construction

A geotechnical ultimate bearing capacity of 300 kPa should be available.

Stormwater

Section 12.10.8 of the KDC District Plan outlines that a site less than 5 hectares and located within an Overlay may create impermeable surfaces up to 10% of the total Lot area as a permitted activity. Creating impermeable areas exceeding this limit becomes a restricted discretionary activity. The proposed development does not exceed 10% impervious of the total Lot area, and therefore specific attenuation design and associated calculations are not required.

Drainage

We recommend that a swale drain or simple v-drain is constructed upslope of the proposed house site to help catch stormwater run-off from the upslope areas. The drain should have a minimum width of 500 mm and depth of 300 mm and discharge downslope clear of the proposed dwelling. The shape of the cut off drain does not matter, but for the purposes of outlining a solution a cross section a parabolic cross section is illustrated below. This shall have a depth of 300 mm and width of 500 mm. The swale should be situated towards the base of the cut and be laid with a minimum gradient of 1% towards a

KDC - Approved Building Consent Document - BC210441 - Pg 32 of 336 - 30/08/2021 - ComplyNZ

sump structure at the lowest point. The sump shall aid in filtering out any material which could block or fill up the stormwater pipes. The sump structure should be sized at minimum in line with a “Type-Two” sump illustrated in Figure 9 E1/AS1 of the NZBC which is attached as an appendix to this Letter. The sump should be routinely inspected for debris and sediment, and cleaned out if required.

The outflow from the sump should then be conveyed via a 150 mm closed pipe to proposed water tank overflow location. A proposed T-bar dispersal trench is proposed to be constructed which is considered suitable. The proposed driveway should be graded towards the downslope to disperse runoff via sheet flow which is considered the best suitable solution as collected and creating a point source only requires further dispersion.

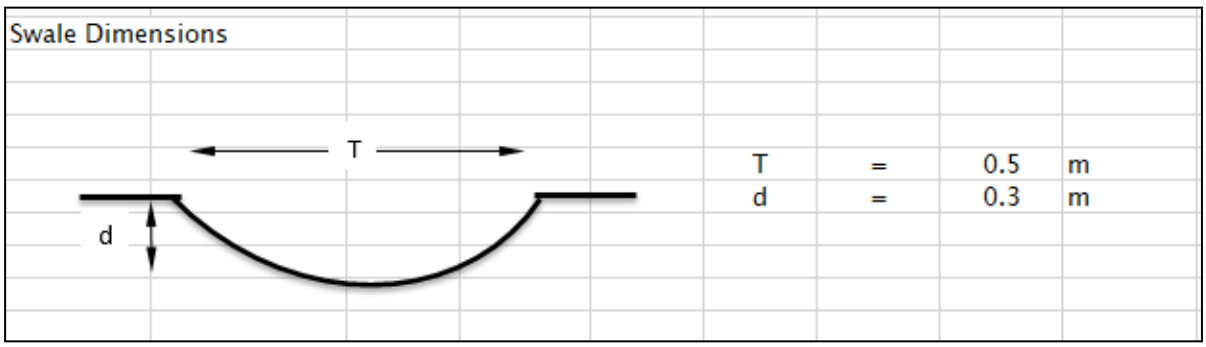

LIMITATIONS

(i) This report has been prepared for the use of our client, Linda & David Kendall and their professional advisers and the relevant Regional Authorities in relation to the specified project brief described in this report. No liability is accepted for the use of any part of the report for any other purpose or by any other person or entity.

(ii) Assessments made in this report are based on the ground conditions indicated from published sources, site inspections and subsurface investigations described in this report based on accepted normal methods of site investigations. Variations in ground conditions may exist between test locations and therefore have not been taken into account in the report. If variations are found during excavation or at foundation preparation stage WGL should be notified immediately so we can amend our recommendations.

(iii) This Limitation should be read in conjunction with the IPENZ/ACENZ Standard Terms of Engagement.

We trust that this information meets your current requirements. Please do not hesitate to contact the undersigned on 021 0399 385 or matt@wileygeotechnical.co.nz if you require any further information.

John Rowland

M Wiley

John Rowland, BEng, MEngNZ

Associate Geotechnical & Stormwater Engineer

Matt Wiley, CPEng, CMEngNZ

Principal Engineer

Attachments:

- Bore Logs

- E1/AS1 of the NZBC: Type-two Sump (Figure 9)

KDC - Approved Building Consent Document - BC210441 - Pg 33 of 336 - 30/08/2021 - ComplyNZ

WILEY GEOTECHNICAL LTD

BOREHOLE No. 1

SITE: Lot 81 The Sanctuary, Mangawhai

REF: 21076

Sheet 1 of 1

REDUCED LEVEL (RL)	INFERRED GEOLOGY	DESCRIPTION OF SOIL	SOIL SYMBOL	DEPTH (m)	SAMPLE TYPE	WATER CONTENT (%)	WATER LEVEL	CORRECTED VANE SHEAR STRENGTH (kPa) ●Peak Field Vane ○Remoulded Field vane 50 100 150	SCALA PENETROMETER BLOWS / 100 mm 5 10 15
TS		TOPSOIL dark brown, some topsoil fill							
	Pakiri Formation of the Waitemata Group	SILT slightly sandy, slight plasticity, slightly clayey, light brown with orange brown mottling, desiccation cracks to 0.7 m		1				200 200 93 ○ 162 ● 78 ○ 147 ●	
		at 1.3 m increase in mositure, plasticity and clay alternating layers of light grey slightly sandy silt, and light brown/orange brown moderately clayey silt		2				69 ○ 147 ● 57 ○ 123 ● 78 ○ 147 ●	
		Hole squeezing encountered - expansive soils						78 ○ 138 ● 87 ○ 141 ●	
		E.O.B: 3.0 m (target depth)		3				81 ○ 138 ●	
				4					
				5					

NOTES Groundwater was not encountered.
Hole squeezing encountered.
TS = Topsoil

LOGGED BY: CS & GW
DATE DRILLED: 17-May-21
DRILL METHOD 50 mm Hand Auger

KDC - Approved Building Consent Document - BC210441 - Pg 34 of 336 - 30/08/2021 - Complying

WILEY GEOTECHNICAL LTD

BOREHOLE No. 2

SITE: Lot 81 The Sanctuary, Mangawhai

REF: 21076

Sheet 1 of 1

REDUCED LEVEL (RL)	INFERRED GEOLOGY	DESCRIPTION OF SOIL	SOIL SYMBOL	DEPTH (m)	SAMPLE TYPE	WATER CONTENT (%)	WATER LEVEL	CORRECTED VANE SHEAR STRENGTH (kPa) ●Peak Field Vane ○Remoulded Field vane 50 100 150	SCALA PENETROMETER BLOWS / 100 mm 5 10 15
	TS	TOPSOIL dark brown							
	Pakiri Formation of the Waitemata Group	SILT slightly clayey, slightly plastic, slightlty sandy, light brown with orange brown staining, desiccation cracks to 0.45 m						200	
								200	
		at 0.9 m increase in clay, increase in plasticity		1				81 ○ 138	
		alternating clayey silts and sandy silts						48 ○ 105	
		at 1.5 m hole squeezing, increase in moisture						63 ○ 105	
								42 ○ 93	
				2				84 ○ 132	
		E.O.B: 2.1 m (target depth)							
				3					
				4					
				5					

NOTES Groundwater was not encountered.
Hole squeeze ar 1.5 m.

LOGGED BY: CS & GW
DATE DRILLED: 17-May-21
DRILL METHOD 50 mm Hand Auger

KDC - Approved Building Consent Document - BC210441 - Pg 35 of 336 - 30/08/2021 - Complyntz

c) Junctions of *drains* other than a *drain*, serving a single downpipe, that is less than 2.0 m long.

Figure 8: **Type-one Surface Water Sump**
Paragraph 3.6.2

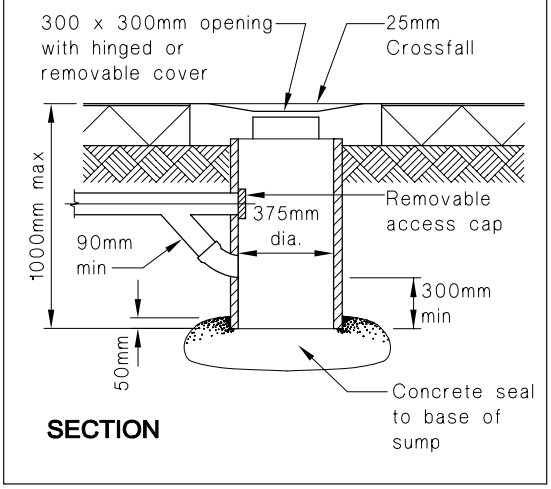

3.7.4 *Inspection chambers* or *access chambers* (see Figures 11 and 12) shall be provided where changes in both gradient and direction occur and where either is greater than 22.5°.

Amend 1
Sep 1993

3.7.5 Where the depth to the invert of the *drain* exceeds 1.0 m, an *inspection chamber* is not acceptable and an *access chamber* shall be used.

3.7.6 Drain under buildings

Any *drain* laid under a *building* shall be run in a straight line from one side to the other.

3.7.7 Access to a *drain* laid under a *building* shall be provided immediately outside the *building*. These points of access shall be located within 2.0 m of an exterior wall.

3.7.8 Under a *building* the only acceptable inlets to a *drain* are from sealed roof-water downpipes. Access shall be provided to the *drain* via a sealed access point in the downpipe immediately above ground floor level.

Figure 9: **Type-two Surface Water Sump**
Paragraph 3.6.2

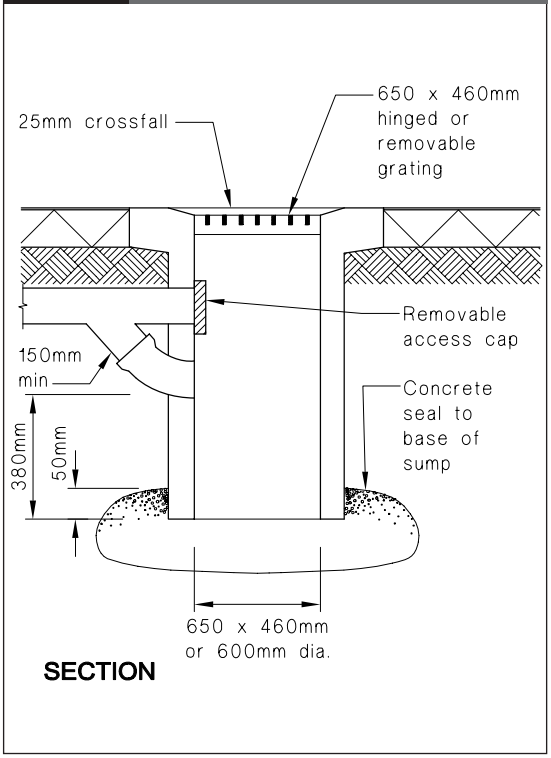

Figure 10: **Typical Rodding Point**
Paragraph 3.7.1

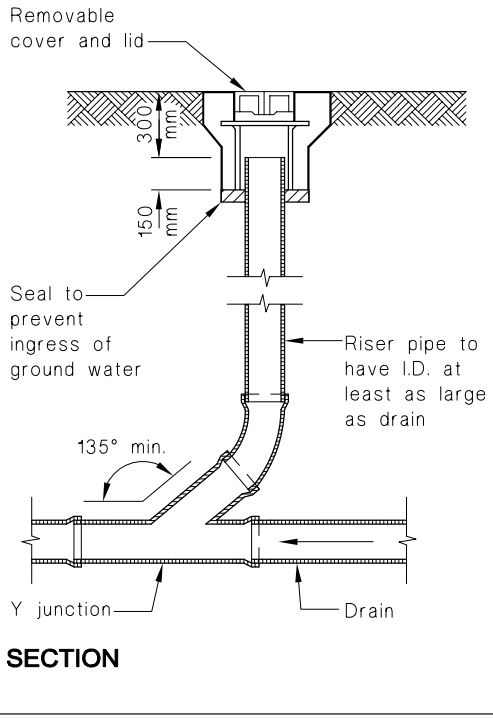

KDC - Approved Building Consent Document - BC210441 - Pg 36 of 336 - 30/08/2021 - ComplyNZ

Hawthorn Geddes
engineers & architects ltd

KDC - Approved Building Consent Document - BC210441 - Pg 37 of 336 - 30/08/2021 - ComplyNZ

ENGINEERING SUITABILITY REPORT

Prepared For

SANCTUARY NORTH LTD

71 & 97 ROBERT HASTIE DRIVE

LOT 2 DP 430128



7 Selwyn Avenue
Whangarei 0110
09 438 7139

hg@hgcs.co.nz

21A The Grange
Warkworth 0910
09 283 3428

hawthorngeddes.co.nz

KDC - Approved Building Consent Document - BC210441 - Pg 38 of 336 - 30/08/2021 - ComplyNZ

ENGINEERING SUITABILITY REPORT FOR SANCTUARY NORTH LTD

Table of Contents

1. Purpose 1
2. Proposal 1
3. Site Description 2
4. Geotechnical Investigation 2
   - 4.1. Geological Setting 2
   - 4.2. Soil Investigation 2
5. Stability 3
6. Foundations 4
   - 6.1. Lots 81-92 4
   - 6.2. Lots 93, 94 4
7. On-Site Effluent Disposal 4
8. Stormwater Management 6
   - 8.1. Pre-Development 6
   - 8.2. Post-Development 7
   - 8.3. Treatment 8
9. Traffic and Access 8
   - 9.1. Access from Cove Road 8
   - 9.2. Lake View Drive and Junction with Robert Hastie Drive 9
   - 9.3. Lake View Drive to ROW 9
   - 9.4. ROW 9
   - 9.5. Proposed JOAL 9
10. Earthworks 10
11. Culvert 11
12. Recommendations and Conclusions 12
    - 12.1. Suitability of Building Sites 12
    - 12.2. On-Site Effluent Disposal 12
    - 12.3. Stormwater Management 13
    - 12.4. Traffic and Access 13
13. Limitation 14

Appendix A – Figures

Appendix B – Borehole Logs

Appendix C – Stormwater Calculations

KDC - Approved Building Consent Document - BC210441 - Pg 39 of 336 - 30/08/2021 - ComplyNZ

Report Prepared by:

Dean Botica
Stacey Gibson

Report Reviewed by:

Dean Botica

DOCUMENT TRANSMITTAL			
Prepared for: Sanctuary North Ltd			Job No.: 10737
Revision	**Issued To**	**Copies Issued**	**Date**
0	Client – David Nathan 4Sight – Max Dunn Terra Consultants – Stephen Dobbie	email	20.09.17
R1	Client – David Nathan 4Sight – Max Dunn Terra Consultants – Stephen Dobbie	Emailed by Dean Botica	
R2	Client – David Nathan 4Sight – Max Dunn Terra Consultants – Stephen Dobbie	email	13.12.18
R3	Client – David Nathan 4Sight – Max Dunn Terra Consultants – Stephen Dobbie	email	08.04.19
R4	Client – David Nathan 4Sight – Max Dunn		12.04.19
R5	Client – David Nathan 4Sight – Max Dunn	email	12.07.19
R6	Client – David Nathan 4Sight – Max Dunn	dropbox	20.08.19

KDC - Approved Building Consent Document - BC210441 - Pg 40 of 336 - 30/08/2021 - ComplyNZ

1. Purpose

The purpose of this report is to provide a summary of the geotechnical investigation and advice on soil conditions for foundations, on-site effluent disposal, stability, stormwater management and traffic for the proposed 17-lot subdivision.

This report supersedes our previous reports and updates advice in relation to the culvert.

This report is suitable for a resource consent application.

2. Proposal

It is proposed to subdivide Lot 2 DP 430128 Robert Hastie Drive into 14 new residential Lots ranging in size from 5600m² to 1.42 ha, as shown by the Terra Consultants Scheme Plan – Option 9 dated 28 October 2018.

The subdivision will be undertaken in three stages. Stage 1 will create Lots 81 – 84 adjacent to Robert Hastie Dr. Stage 2 will create Lots 91 – 94 with access from existing ROW. Stage 3 will create Lots 85 to 90, which will require widening and sealing an existing ROW and constructing a new gravel ROW.

Access to the property from Cove Road is via Robert Hastie Drive, a privately owned Right of Way (ROW). Access to the individual Lots will be either directly from Robert Hastie Drive (Lots 81 – 84), existing Rights of Way (ROW) (Lots 91 – 94) or from the new Jointly Owned Access Lot (JOAL), which extends from an existing ROW from Lake View Drive. The existing ROW from Lake View Drive will be upgraded to comply with Kaipara District Council (KDC) engineering standards.

Earthworks for private access to the proposed house sites will be relatively minor with excavations of less than 1m. Earthworks to form level building platforms is unlikely to exceed 2m of excavation or 1m of fill.

Stormwater attenuation is proposed to be provided for the Lots and JOAL by utilising a low-lying area adjacent to the stream and the existing twin 900 dia culvert outlets under Lake View Drive. Additional attenuation storage is also to be constructed within an existing watercourse directly upstream of the proposed JOAL. These attenuation storage zones are shown on the attached Figure 1.

Stormwater treatment is to be provided via a grass filter strip within the base of the collection swale along the length of the JOAL.

The site is not connected to a reticulated water or wastewater network. Therefore, water supply will be from roof water collected in on-site tanks.

On-site effluent disposal will be required for each of the 14 new residential Lots.

KDC - Approved Building Consent Document - BC210441 - Pg 41 of 336 - 30/08/2021 - ComplyNZ

3. Site Description

Lot 2 DP 404128 is an irregular shaped property with an area of some 13.7ha. The site is currently grassed and planted with olive trees. Access to the property is from Robert Hastie Drive and the existing ROW from Lake View Drive.

The property has a prominent north-west to south-east trending ridge through the centre of the property. Either side of the central ridge are two small streams that converge near the eastern property boundary with Lake View Drive.

The area downstream of the confluence has been flooded by creation of a lake during the previous subdivision and is surrounded by relatively flat, low-lying land. The stream discharges to the lake via twin 900 dia culverts under Lake View Drive.

Slopes on the property vary from near flat to steeper than 3H:1V.

4. Geotechnical Investigation

4.1. Geological Setting

The geological map of the Mangawhai area, viewed online from the Institute of Geological and Nuclear sciences indicates the property is underlain by Pakiri formation of the Waitemata Group, consisting of *'alternating thick-bedded, volcanic-rich, graded sandstone and siltstone.'*

This description is consistent with soils encountered in hand augered boreholes.

4.2. Soil Investigation

A total of 22 boreholes were augered to depths of between 0.9-2.7m with shear strength testing at nominal 0.5m intervals and Scala penetrometer testing in non-cohesive materials.

Boreholes HA1 - HA7 and HA11 - HA14 were drilled on the central ridge area. These boreholes encountered a similar soil profile consisting of topsoil to a depth of up to 200mm underlain by stiff-to-very-stiff high plasticity silty clays to the bottom of each borehole. Shear vane results were greater than 70kPa and typically greater than 90kPa.in these boreholes.

Groundwater was encountered in HA6 at 1.4m. Groundwater was not encountered in the other boreholes.

HA8 - HA10 were drilled on the slope along the southern property boundary. These boreholes encountered topsoil to 100mm to 200m depth. This was underlain by stiff-to-very-stiff sandy and silty clay to the base of each borehole. Shear vane results were variable in and between the boreholes. In HA8 shear vane results were more than 100kPa to a depth of 1.5m and varied from 30kPa to 80kPa below this depth.

KDC - Approved Building Consent Document - BC210441 - Pg 42 of 336 - 30/08/2021 - ComplyNZ

In HA9 shear vane results were more than 90kPa to a depth of 1m and varied from 65kPa to 78kPa below this depth. In HA11 shear vane results were 36kPa to 48kPa to a depth of 1.4m and below this the ground was too hard for the vane to penetrate.

Groundwater was encountered in HA8 at 1.7m and HA9 at 0.7m.

HA15 – HA22 were drilled on the slope along the northern property boundary adjacent to Robert Hastie Dr. Topsoil in this area was variable and generally less than 150mm thick. Topsoil was underlain by silt and clay with variable sand content.

The materials were typically highly plastic and very stiff. Shear vane strengths were typically above 100kPa apart from at less than 0.4m in HA16 and HA21. HA18 refused on hard material at 0.4m and the Scala penetrometer refused at this depth.

Logs of the boreholes and a site plan indicating the borehole locations are attached to this report.

5. Stability

We did not observe any widespread or deep seated instability on Lot 2. We did not observe terracettes on the property indicating creep movement.

Figure 1 attached to this report identifies areas assessed as suitable for building with adequate stability. These areas are all significantly more than the required 15m x 15m area required under the KDC District Plan. It is noted that other areas may be suitable for building but these areas will require specific engineering assessment.

Earthworks to form level building platforms may require excavations of up to 1.5m and fill of up to 1m. Cut batters shall be formed no steeper than 3H:1V to a maximum height of 2m or shall be retained. Fill may be placed on slopes of less than 5H:1V and shall have batters no steeper than 4H:1V to a maximum height of 1m or shall be retained.

Earthworks for the new access will be relatively minor other than the fill embankment for the steam crossing which will be up to 4.5m high. The cross sections attached indicate fill batters of up to 2H:1V. These batters are considered adequate for the proposed ROW.

Subject to the above recommendations it is our opinion in terms of Section 106 of the Resource Management Act that:

(a) the land in respect of which a consent is sought, or any structure on the land, is not and is not likely to be subject to material damage by erosion, falling debris, subsidence, slippage, or inundation from any source; and

(b) any subsequent use that is likely to be made of the land is not likely to accelerate, worsen, or result in material damage to the land, other land, or structure by erosion, falling debris, subsidence, slippage or inundation from any source; and

(c) sufficient provision has been made for legal and physical access to each allotment to be created by the subdivision.

KDC - Approved Building Consent Document - BC210441 - Pg 43 of 336 - 30/08/2021 - ComplyNZ

6. Foundations

6.1. Lots 81-92

Soils encountered in hand augered boreholes on these Lots were consistent with good ground as described in NZS 3604 except that it is expansive. We consider the property to be suitable for conventional slab on grade foundations.

Shallow foundations may be designed in accordance with NZS 3604 but shall have perimeter footings embedded a minimum of 600mm below cleared ground to allow for any potential shrink/swell movement due to seasonal soil moisture variations.

6.2. Lots 93, 94

Soils encountered in hand augered boreholes were not consistent with good ground as described in NZS 3604 due to low bearing capacity. These Lots will be suitable for shallow foundations subject to specific engineering design of foundations.

Due to variability of ground conditions we recommend further investigation for the building location at the time of building consent.

7. On-Site Effluent Disposal

Soils on the property have been assessed for on-site effluent disposal in terms of AS/NZS 1547:2012 and the Regional Water and Soil Plan (RWSP) for Northland.

There is a potential for increased nutrient levels and pollution of downstream waterways with faecal bacteria and viruses associated with effluent discharge. These potential effects can be mitigated by installation of an appropriate treatment system and which provides a suitable level of treatment and avoiding disposal areas close to water courses or surface water.

We have identified the soils on the proposed lots as very poorly drained clays, or Category 5 in terms of AS/NZS 1547:2000. All of the Lots adjoin one of the two streams. Furthermore, we have identified two areas with surface water due to poor surface drainage and/or groundwater seepage.

Based on these site constraints we consider the proposed Lots are not suitable for conventional septic tanks discharging to trenches. We recommend wastewater be treated to secondary treatment standard and discharge to pressure compensated drip irrigation (PCDI).

A design irrigation rate of 2.8mm/day is recommended for this soil type.

The sizing of the effluent disposal fields for our assessment is based on a maximum design occupancy of ten people to allow for short-term holiday periods without overly restricting future development. It is possible that actual disposal field requirements will be smaller.

KDC - Approved Building Consent Document - BC210441 - Pg 44 of 336 - 30/08/2021 - ComplyNZ

Table 1 below shows sizing for a potential dwelling on one of the new Lots:

Table 1: Summary of Effluent Field

Tank water (extra wastewater producing facilities)	200 litres/person/day
Maximum theoretical volume of effluent (10 people)	10 x 200 = 2,000 litres/day
Design irrigation rate (Cat 5 soil)	2.8 mm/day
Application area	2,000 ÷ 2.8 = 715 m^2
Reserve area required (30%)	215 m^2
Total area required	930 m^2

We estimate the discharge fields for each Lot are unlikely to exceed 1,000m^2 including a reserve area of 215m^2 (30%).

The attached Figure 2 shows areas unsuitable for disposal of secondary treated effluent. These areas have at least 15m separation from surface water identified by survey on site.

All of the proposed Lots have at least 1,500m^2 available for on-site effluent disposal with adequate clearance to surface water.

Table 2 below sets out the requirements of the RWSP permitted activity rules and shows how these rules can be complied with.

Table 2: RWSP Permitted Activity Rules

RWSP Permitted Activity Requirement	Means of Compliance
Separation between the lowest point of the disposal system and groundwater.	Groundwater was encountered more than 0.6m deep on all lots.
Minimum treatment levels for secondary treated effluent.	Recommended treatment levels less than rules.
Separation between the disposal and reserve area and groundwater bores.	No groundwater bores nearby.
Separation between the disposal and reserve and any surface water.	Separation distances at least 15m.
Distribution of the effluent	Recommend PCDI.
Design of the system in accordance with principles and procedures outlined in AS/NZS 1547:2000 'On-Site Domestic Wastewater Management'.	Soil categorised from AS/NZS 1547:2000 with appropriate DIR.

KDC - Approved Building Consent Document - BC210441 - Pg 45 of 336 - 30/08/2021 - ComplyNZ

No surface runoff of any contaminants from the disposal area.	Mitigation measures referred to above to reduce contaminant loading and increase soil treatment/plant uptake.
No more than minor contamination of ground or surface water beyond the disposal system or boundary.	
The average volume of effluent discharged < $3m^3$/day.	Expected to be single houses only, estimated as 2 m^3/day (10 persons).
The maximum volume of effluent discharge < $6m^3$/day.	
A reserve area is allowed for and set aside.	Areas suitable for disposal sufficient for 30% reserve area shown on site plan.
Maintenance of the treatment and disposal system.	Building Consent should include a maintenance agreement for secondary treatment.

8. Stormwater Management

It is proposed to provide the required stormwater attenuation storage for the proposed Lots and JOAL of the development by utilising the existing low-lying area adjacent to the stream near the eastern site boundary and an additional storage area to be constructed on the watercourse upstream of the proposed JOAL.

All stormwater runoff from the proposed development including the upstream catchments will be collected within the ponds and controlled discharges will be to the lake downstream.

The stormwater design for the proposed development is based on attenuation of the post-development peak flow to pre-development rates. The design utilises attenuation storage to limit the additional runoff generated by the proposed development. The storage elements have been designed to address the runoff generated by a 20% AEP (5-year ARI) and a 1% AEP (100-year ARI) storm events for the entire catchment.

The site was modelled in HydroCAD adopting modified rational method and using rainfall data from table 6.7 of the KDC ES, for pre- and post-development.

8.1. Pre-Development

The catchment to the twin 900 dia culverts, in which the proposed development lies, is approximately 27ha. The catchment is currently grassed, planted with olive plants and there are a few stands of trees. The pre-development form has therefore been defined as 27ha of pervious area with a storage volume provided by the low-lying area adjacent to the stream. The soil on the site has been assessed as hydrologic soil group D and as a result the runoff coefficient of 0.67 has been used.

KDC - Approved Building Consent Document - BC210441 - Pg 46 of 336 - 30/08/2021 - ComplyNZ

The pre-development runoff rates for the outlet point of the existing catchment were defined by applying a 20% AEP and a 1% AEP storm event with critical durations associated with the twin culvert outlets. The resulting pre-development peak flows are calculated as 2.56m³/s for the 20% AEP storm event with a critical duration of 29min and as 6.38m³/s for the 1% AEP storm event with a critical duration of 37min. These are used as the upper limits for controlled runoff post-development peak flows.

It should be noted that for a 1% AEP storm event for the pre-development condition, the model indicates that the twin culverts head up and flows discharge across Lake View Drive with a depth of approximately 170mm. The twin culverts have a capacity of 4.28m³/s. The culverts currently provide some attenuation to the flows from the catchment.

8.2. Post-Development

The proposed development is within an area where the permitted pervious coverage is 10%. However, due to a number of the proposed lots being of significant size, and to reduce the attenuation volume requirement for the proposed development, the attenuation calculations allow for the catchment outside of the proposed subdivision to be developed to the maximum pervious coverage permitted, while the lots of the subdivision are to be limited to a maximum of 800m².

The re-use of stormwater provides a significant contribution to stormwater attenuation and therefore a percentage reduction of the required attenuation volume attributable to a house roof can be applied. It is considered that with a roof area of 300m² with a 25,000 litre roof tank, a 25% reduction of required attenuation volume is applicable. Therefore an impervious area reduction of 75m² has been applied for each proposed lot of the subdivision.

For the post-development form the catchment has been split into two sub-catchments (9.6ha to the upper sub-catchment and 17.4ha to the lower sub-catchment). The upper sub-catchment is the area upstream of the JOAL, mainly from the south. Attenuation storage for this sub-catchment is to be provided within the existing watercourse and discharge control via the proposed culvert outlet under the JOAL. The lower sub-catchment is the balance of the catchment, from the north, and will also receive attenuated flows from the upper sub-catchment. Discharge control will be provided via the existing twin culvert outlet.

The post-development form for the upper sub-catchment has been modelled as 1200m² of impervious area for the JOAL, 5280m² of impervious area for the development of the sub-catchment, which allows for 10% impervious coverage, lots limited to 800m², and a 75m² area reduction for water reuse for the 7 Lots (5 proposed as part of this subdivision) within the sub-catchment, and 8.90ha of pervious area. The post-development form for the lower sub-catchment has been modelled as 1.61ha of impervious area for the development of the sub-catchment, which allows for 10% impervious coverage, lots limited to 800m², and the 75m² area reduction for water reuse for the 15 Lots (9 proposed as part of this subdivision) within the sub-catchment, and 15.67ha of pervious area.

From topographical survey data provided for the subdivision it has been calculated that the low-lying area has an available attenuation storage volume of approximately 4700m³.

KDC - Approved Building Consent Document - BC210441 - Pg 47 of 336 - 30/08/2021 - ComplyNZ

Constructing the storage area upstream of the proposed JOAL is calculated to provide an additional 700m³ of attenuation storage. The proposal is to attenuate flows from the upper sub-catchment via a 600 dia culvert. Attenuation on the lower catchment will remain unchanged, utilising the existing twin culvert outlets.

The post-development peak flow from the catchment outlet is calculated as 2.43m³/s with a 32min critical duration for a 20% AEP storm event and as 6.29m³/s with a 39min critical duration for a 1% AEP storm event. As per the pre-development condition the 1% AEP storm event results in an overflow across Lake View Drive, however no increase in flow depth from the pre-development condition is expected. Flow across the JOAL is also expected for the 1% AEP storm event, not exceeding approximately 100mm. Refer to the attached HydroCAD report summary.

8.3. Treatment

The primary source of contaminants from the development is associated with the JOAL. Treatment to the runoff is proposed by utilising the base of a grassed collection swale along the length of the JOAL. The required length has been calculated in accordance with ARC TP10. Based on the existing ground slope of 8.6% and a base width of 1.0m, a 118.9m length is required to treat the associated runoff. Due to the slope of the swale, check dams will be required. There is more than adequate length in the swale to provide the required treatment and further treatment will be provided via the check dams and the attenuation area and lake downstream. Refer to the attached calculations.

9. Traffic and Access

9.1. Access from Cove Road

Access to the site from Cove Road has previously been assessed in some detail for the commercial development proposal immediately to the south of the main site entrance. The road junction created for the original subdivision has been constructed to the Austroads Figure 4.9(b) with a limiting capacity (movements) in the order of 80 vehicles per hour for a peak traffic of 400 vehicles per hour on Cove Road.

The present development, including recent further subdivision and the consented commercial development has the ultimate potential to generate in the order of 650 one way movements per day (maximum), with associated peak movements unlikely to exceed 65 vehicles per hour. The addition of 14 Lots will add an estimated 56 movements per day which remains well within the capacity of the primary junction design.

Robert Hastie Drive itself has been constructed to a carriageway width of 6m plus flush edging (total width of 6.5m) which is adequate to serve up to 50 Lots. The current number served (beyond the ROW on the north side immediately after the entrance gates) is 43 and the proposal would take this number to 57, potentially more depending on the ultimate development.

KDC - Approved Building Consent Document - BC210441 - Pg 48 of 336 - 30/08/2021 - ComplyNZ

Noting that the KDC standards require the edge restraint to not be considered as part of the carriageway width, despite it being flush and available, the access width proposed for the 57 Lots total is considered adequate on the basis that access remains controlled and not open to public use. Users are therefore familiar with the "constrained" carriageway width and the roads are likely to be subject to lower movements generally, which offsets the need to provide an increased carriageway width. Furthermore, Lot size is such that on-road parking is unlikely to have significant demand.

9.2. Lake View Drive and Junction with Robert Hastie Drive

Lake View Drive has an existing carriageway width of 5m plus edge restraint, and currently serves 12 Lots (including the one proposed for subdivision). The existing road width is 0.5m narrower than is required to serve that number of Lots (using the KDC definition outlined in note 2 of table 5.1). On the basis that the 5.0m width was previously accepted by KDC for the current number of Lots, and this places the access in the 7-30 Lot access range, extending the Lot numbers to less than this limit for this classification is considered to be acceptable. This being a maximum of 9 additional Lots onto the access at the existing carriageway width.

The existing junction radius of 10m complies with the requirements of the KDC engineering standards, and no amendment to the junction is required.

9.3. Lake View Drive to ROW

This is presently formed in metal and serves 5 Lots. The proposed subdivision requires that it serve 18 Lots and would require a 5.5m sealed width under the current KDC standards. However, noting the previously accepted width provision of 5m, and the access being from a network of roads constructed at 5.0m width (plus edge restraint), extending the provision of access at the 5m width is considered appropriate.

It is therefore recommended that a 5m sealed width plus edge restraint, as previously provided elsewhere on the development, is suitable to serve the proposed Lots.

The junction radius should be formed to the 10m radius of the KDC standards.

9.4. ROW

The existing ROW beyond Lakeview Dr is gravel surfaced and less than 5m wide. This ROW presently serves 5 Lots. The subdivision will result in the ROW serving a further 6 Lots or a total of 11 Lots. The KDC standards require a minimum carriageway width of 5.5m.

This access will be sealed with concrete edge restraints.

9.5. Proposed JOAL

This JOAL is proposed to serve 6 Lots. The KDC standards require this to be constructed to a width of 3m. It is proposed to form the JOAL with a total width of 4.5m plus shoulders, which exceeds the engineering standards.

KDC - Approved Building Consent Document - BC210441 - Pg 49 of 336 - 30/08/2021 - ComplyNZ

10. Earthworks

Earthworks for stages 1 and 2 will be minor requiring little more than stripping topsoil to create vehicle crossings. The total earthworks for each of these stages is unlikely to exceed 200m^3.

Earthworks for stage 3 will require widening an existing ROW by up to 1.5m over a length of some 60m and constructing a new ROW some 260m long. We have undertaken a preliminary design of the new access, attached as figures 3 - 7. Earthworks for this access will involve stripping topsoil and cut and fill of less than 0.4m over most of the ROW. Over a length of approximately 40m, up to 2.5m fill is proposed for a stream crossing.

Widening the existing ROW will involve less tan 50m^3 over an area of some 100m^2.

The total area of earthworks for the new access is estimated at less than 1,700m^2. The total volume of fill including pavements is estimated at 1,200m^3 for the JOAL. Most of the fill is associated with the embankment required for the stream crossing which will be some 950m^3. The remaining fill will be associated with construction of the ROW pavement.

The total volume of cut to fill on site will be less than 200m^3. In addition to this topsoil stripping is estimated at 275m^3, which will be used to construct bunds around the earthworks area or stockpiled and be respread on completion. The remaining earthfill for the stream crossing will be imported from off site.

The plant required to complete this work will involve trucks to import the fill, excavators and/or bulldozers to strip topsoil, muck out any unsuitable soils and spread the material and a padfoot roller for compaction.

The Riparian Management Zone (RMZ) for both the current and proposed Regional Water and Soil Plan (RWSP) will extend 10m from the stream. The volume of earthworks within the RMZ will be approximately 400m^3 with an area of 300m^2. Therefore resource consent is required from NRC for this earthworks.

This work will be undertaken over the summer earthworks season when the stream will not be flowing. It will be necessary to construct the culvert first during a period of fine weather when the stream is not flowing, to create a clean water diversion for the stream through the site.

We estimate the culvert will take no more than 1 week to construct. Bulk filling of the stream crossing is unlikely to take around 2 to 4 weeks. On completion of the bulk earthworks the fill batters will top soiled, grassed and planted. Sediment and erosion controls will remain until grass has adequately established.

Erosion and sediment controls during the earthworks will be undertaken in accordance with Auckland Council GD05. It is likely that this will require decanting earth bunds both above the earthworks to divert water and downstream to control sediment laden run-off.

KDC - Approved Building Consent Document - BC210441 - Pg 50 of 336 - 30/08/2021 - ComplyNZ

11. Culvert

A new culvert is proposed, which is approximately 20m long. The culvert will be laid entirely within the bed of the existing stream and there will be no stream diversion.

Under the operative Regional Water and Soil Plan the proposed culvert is a permitted activity under Rule 29.1.03 as:

a) The length of the culvert crossing does not exceed 25 metres and is of sufficient size to contain the bankfull flow.
b) There are no adverse flooding or erosion effects on any upstream, adjoining or downstream properties.
c) The works include the provision of an overland flowpath on the same property to ensure the safe passage of a 1 in 100 year period flood flow event.
d) During the disturbance of the bed, upstream flow up to a 1 in 5 year return period storm event, will be temporarily diverted around the area of disturbance except where the temporary damming of the water is undertaken in accordance with Rule 28.01.05.
e) The activity does not take place in any dune lake listed in Schedule E; or in an indigenous wetland; or a river, or section of river or lake, deemed to have outstanding values as shown in Appendix 18.
f) It is not regulated by Rule 27.03.02. It is noted that baffles will need to be installed within the culvert so as to not impede the passage of fish.
g) The activity complies with the Environmental Standards in 29.01.11. It is noted that baffles will need to be installed within the culvert so as to not impede the passage of fish.

In terms of the proposed Regional Plan permitted activity rules:

a) The contributing catchment is less than 300 hectares, and
b) the culvert length under the crossing parallel to river flow exceeds 10 metres, and
c) the culvert is designed in such a way with baffles that flow velocity will not impede fish passage during normal flow conditions, and
d) culvert approaches and fill placed on the river or lake bed will be free of organic matter, and
e) the total height of the crossing crest is:

    i. no more than 3.5 metres above the invert level of the culvert inlet, and

    ii. within the manufacturer's maximum height specifications for the culvert, and

    iii. below the river bank level unless it is necessary for a road and

f) the culvert will be installed so that the base is set a minimum of 25 percent and a maximum of 50 percent of the culvert diameter below the stream bed, and
g) records of structure design and flow calculations are attached to this report, and
h) the culvert is not in a significant wetland, an outstanding freshwater body or mapped Outstanding Natural Character Area, or Outstanding Natural Feature, or Site or Area of Significance to tangata whenua.

KDC - Approved Building Consent Document - BC210441 - Pg 51 of 336 - 30/08/2021 - ComplyNZ

It is proposed to install baffles within the pipe to promote fish passage. However, a resource consent is required as Item b) does not comply with the PA rules and a resource consent is required.

12. Recommendations and Conclusions

12.1. Suitability of Building Sites

We have identified areas on all lots suitable for building residential dwellings. These areas are all larger than 150m2 as required in the KDC district Plan. All the identified building areas are more than 10m from boundaries with ROW and at least 3m from side boundaries. Apart from Lot 89 the building areas are at least 30m from any stream or water course.

These areas are assessed to have adequate stability but will require some earthworks to create level building platforms. Earthworks to form level building platforms may require excavations of up to 1.5m and fill of up to 1m. Cut batters shall be formed no steeper than 3H:1V to a maximum height of 2m or shall be retained. Fill may be placed on slopes of less than 5H:1V and shall have batters no steeper than 4H:1V to a maximum height of 1m or shall be retained.

Ground conditions within most of these areas are assessed to be good ground in accordance with NZS 3604 except they are expansive. Soil conditions in Lots 93 and 94 are variable. We recommend specific investigation for building consent on these lots to confirm foundations requirements for building consent.

12.2. On-Site Effluent Disposal

The following is a summary of the design requirements for building consent for on-site effluent disposal.

- The treatment system on each Lot shall consist of secondary treatment plant to surface covered pressure compensated dripper irrigation on slopes of less than 4H:1V or buried 100mm in topsoil if on slopes between 4H:1V and 2H:1V.

- Secondary treatment plants must be capable of maintaining a standard of treatment such that:
    a) the five day biochemical oxygen demand (BOD_5) of any sample taken is less than or equal to 20 grams per cubic metre; and

    b) the total suspended solids (TSS) concentration of any sample taken is less than or equal to 30 grams per cubic metre

- Specific design of the application area will be required for building consent.

- Disposal areas shall be based on a DIR of 3mm/day for secondary treated effluent to PCDI.

KDC - Approved Building Consent Document - BC210441 - Pg 52 of 336 - 30/08/2021 - ComplyNZ

- It is a permitted activity rule in the RWSP (Regional Water and Soil Plan) that a maintenance contract is entered into for the treatment and disposal system.
- No disposal within 15m of surface water including the areas identified as unsuitable on the attached plan.
- Disposal fields on slopes steeper than 4H:1V shall have an additional 10m buffer zone between the lower extent of the field and any surface water.
- The existing culvert discharging onto proposed Lot 83 will require piping to at least 15m downslope of the proposed disposal field.

Subject to these recommendations the proposed Lots will be suitable for on-site effluent disposal.

We confirm that all proposed lots have 1,500m^2 suitable for on-site effluent disposal subject to the above recommendations as required by the KDC District Plan.

12.3. Stormwater Management

The stormwater management design for the proposed development, as outlined above, meets the requirements of the KDC ES 2011 and AC TP10 in relation to treatment and attenuation of post-development flows.

12.4. Traffic and Access

The existing sealed access widths and junctions are considered appropriate for the proposed development. No adaptations are necessary in providing for the proposed lots.

A 5.0m sealed width plus shoulders is considered suitable for the upgraded length of ROW.

The proposed JOAL will be formed to a width of 4.5m plus 0.25 shoulders which meets the requirements of the KDC engineering standards.

13. Limitation

Recommendations and opinions in this report are based on data from the investigation described herein. The nature and continuity of subsoil conditions away from the boreholes is inferred and it is possible that actual conditions could vary from those assumed. Should subsoil conditions vary from those described in this report, it is essential that Hawthorn Geddes engineers and architects ltd be contacted to confirm the applicability of the recommendations.

This report has been prepared solely for the benefit of our client Sanctuary North Ltd and the Kaipara District Council in relation to the resource consent application for which this report has been prepared.

The comments in it are limited to the purpose stated in this report. No liability is accepted by Hawthorn Geddes engineers & architects ltd in respect of its use by any other person, and any other person who relies upon any matter contained in this report does so entirely at their own risk.

KDC - Approved Building Consent Document - BC210441 - Pg 53 of 336 - 30/08/2021 - ComplyNZ

KDC - Approved Building Consent Document - BC210441 - Pg 54 of 336 - 30/08/2021 - ComplyNZ

Appendix A – Figures

KDC - Approved Building Consent Document - BC210441 - Pg 55 of 336 - 30/08/2021 - ComplyNZ

NOTE.
SITE INFORMATION ADAPTED FROM SURVEY DRAWING PROVIDED BY TERRA COBNSULTANTS REFERENCE SC106.
ALL INFORMATION MUST BE CONFIRMED ON SITE.
TO BE READ IN CONJUNCTION WITH HAWTHORN GEDDES ENGINEERS & ARCHITECTS LTD REPORT REFERENCE 10737

Key

- HA — Hand augered borehole locations
- Attenuation storage zone
- Existing stream
- Area suitable for building (*Identified building sites subject to consent notice*)
- Areas where building and wastewater suitability overlap

LOT 50 DP 430128
LOT 53 DP 430128
LOT 54 DP 430128
LOT 55 DP 430128
LOT 56 DP 430128
LOT 57 DP 404128
LOT 58 DP 404128
LOT 59 DP 404128
LOT 60 DP 404128
LOT 49 DP 430128
LOT 48 DP 430128
LOT 47 DP 430128
LOT 1 DP 430128

LOT 84
LOT 85
LOT 86
LOT 87
LOT 83
LOT 82
LOT 81
LOT 88
LOT 80
LOT 89
LOT 90
LOT 91
LOT 92
LOT 93
LOT 94

HA1 1270m² LOT 92
HA2
HA3 1170m² LOT 91
HA4
HA5 LOT 90
HA6 1380m²
HA7 1010m² LOT 89
HA8 1790m²
HA9 1060m² LOT 93
HA10
HA11 1380m²
HA12 1560m²
HA13 1430m²
HA14 900m² LOT 88
HA15 1080m²
HA16 1340m²
HA17
HA18
HA19
HA20 1890m²
HA21 1070m²
HA22
HA23

SW collection & treatment swale along length of JOAL - sealed access

Attenuation storage zone

2 x existing 900Ø culverts

Attenuation storage zone to southern sub-catchment

USE WRITTEN DIMENSIONS. DO NOT SCALE FROM DRAWING.

© HAWTHORN GEDDES ENGINEERS & ARCHITECTS LTD (HGE&A)
THE COPYRIGHT OF THIS DRAWING IS THE PROPERTY OF HGE&A.
REPRODUCTION OF THIS DESIGN OR DRAWING IS NOT PERMITTED UNLESS PERMISSION IS OBTAINED FROM HGE&A.

SITE PLAN
SCALE - 1:2000

Hawthorn Geddes engineers & architects ltd
7 Selwyn Avenue, Whangarei 0110, Phone: 09 438 7139, hg@hges.co.nz
Unit 21a, The Grange, Wakiwahi 0910, Phone: 09 283 3428, www.hawthorngeddes.co.nz

CLIENT: DUCK TRUST
PROJECT: SUBDIVISION SUITABILITY
97 & 71 ROBERT HASTIE DRIVE, MANGAWHAI
DRAWING: SUITABLE BUILDING AREAS PLAN

PROJECT No. 10737
SHEET: Figure 1

24/05/2019 11:27:02 AM K:\10737 Duck Trust Subdivision Suitability Lots 1 & 2 Robert Hastie Drive Mangawhai\10737 170731 EG from TDPO.dwg

KDC - Approved Building Consent Document - BC2104441 - Pg 56 of 336 - 30/08/2021 - ComplyNZ

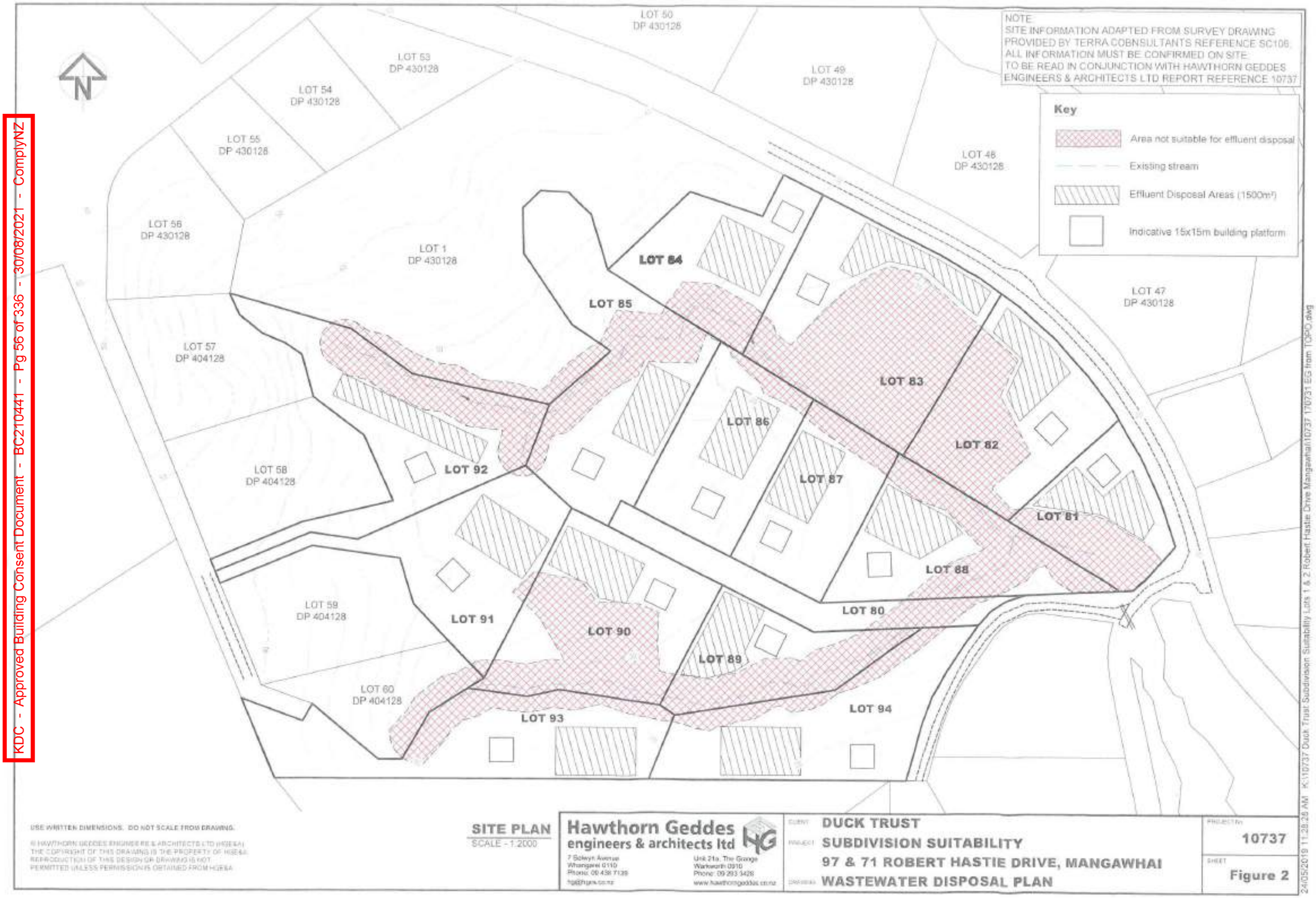

USE WRITTEN DIMENSIONS. DO NOT SCALE FROM DRAWING.

© HAWTHORN GEDDES ENGINEERS & ARCHITECTS LTD (HGE&A)
THE COPYRIGHT OF THIS DRAWING IS THE PROPERTY OF HGE&A.
REPRODUCTION OF THIS DESIGN OR DRAWING IS NOT PERMITTED UNLESS PERMISSION IS OBTAINED FROM HGE&A

SITE PLAN
SCALE - 1:2000

Hawthorn Geddes
engineers & architects ltd
7 Selwyn Avenue
Whangarei 0110
Phone: 09 438 7139
Unit 21a, The Grange
Warkworth 0910
Phone: 09 293 3428
www.hawthorngeddes.co.nz

CLIENT: DUCK TRUST
PROJECT: SUBDIVISION SUITABILITY
97 & 71 ROBERT HASTIE DRIVE, MANGAWHAI
DRAWING: WASTEWATER DISPOSAL PLAN

PROJECT No: 10737
SHEET: Figure 2

24/05/2019 11:28:28 AM K:\10737 Duck Trust Subdivision Suitability Lots 1 & 2 Robert Hastie Drive Mangawhai\10737 170731 EG from TOPO.dwg

KDC - Approved Building Consent Document - BC210441 - Pg 57 of 336 - 30/08/2021 - ComplyNZ

Proposed hammer-head turning area

NOTE
SITE INFORMATION ADAPTED FROM SURVEY DRAWING PROVIDED BY TERRA CONSULTANTS REFERENCE 93003.
ALL INFORMATION MUST BE CONFIRMED ON SITE.
TO BE READ IN CONJUNCTION WITH HAWTHORN GEDDES ENGINEERS & ARCHITECTS LTD REPORT REFERENCE 10737

N

Existing sealed road

Proposed new metal road (Ch 80 - 320) 6m wide

Proposed 600Ø culvert, refer to Figure 7 for details

Widen existing metal road (Ch 0 - 60) to 5.0m (area to be widened shown hatched)

CD01 Fig 6

CD02 Fig 6

Ch 260.00 Ch 240.00 Ch 220.00 Ch 200.00 Ch 180.00 Ch 160.00 Ch 140.00 Ch 120.00 Ch 100.00 Ch 80.00 Ch 60.00 Ch 40.00 Ch 20.00

Watercourse

Existing metal road

SITE PLAN
SCALE - 1:1000

Culvert location

DATUM: 6.00

| | | |

KDC - Approved Building Consent Document - BC210441 - Pg 58 of 336 - 30/08/2021 - ComplyNZ



CH: 80.00



CH: 60.00



CH: 40.00



CH: 20.00



CH: 160.00



CH: 140.00

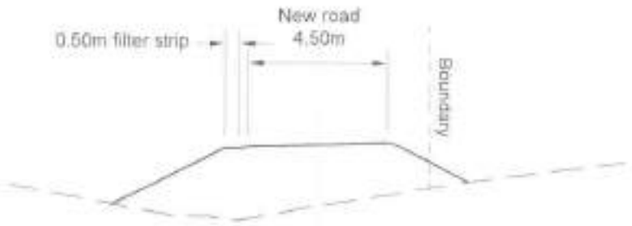

CH: 120.00



CH: 100.00

SCALE @A3 1:200

USE WRITTEN DIMENSIONS. DO NOT SCALE FROM DRAWING.

© HAWTHORN GEDDES ENGINEERS & ARCHITECTS LTD (HGE&A)
THE COPYRIGHT OF THIS DRAWING IS THE PROPERTY OF HGE&A.
REPRODUCTION OF THIS DESIGN OR DRAWING IS NOT
PERMITTED UNLESS PERMISSION IS OBTAINED FROM HGE&A.

Hawthorn Geddes
engineers & architects ltd
7 Selwyn Avenue
Whangarei 0110
Phone: 09 438 7139
hg@hgea.co.nz

Unit 21a, The Grange
Warkworth 0910
Phone: 09 283 3428
www.hawthorngeddes.co.nz

CLIENT: SANCTUARY NORTH
PROJECT: PROPOSED SUBDIVISION
LOT 2 DP 430128
DRAWING: CROSS SECTIONS: CH 20 - 160

PROJECT No: 10737
SHEET: Figure 4

24/05/2019 11:29:29 AM K:\10737 Duck Trust Subdivision Suitability Lots 1 & 2 Robert Haste Drive Mangawhai\10737_161129 PROPOSED ROAD v4.dwg

KDC - Approved Building Consent Document - BC210441 - Pg 59 of 336 - 30/08/2021 - ComplyNZ



CH: 240.00



CH: 320.00



CH: 220.00



CH: 300.00



CH: 200.00



CH: 280.00



CH: 180.00



CH: 260.00

SCALE @A3 1:200

USE WRITTEN DIMENSIONS. DO NOT SCALE FROM DRAWING.

© HAWTHORN GEDDES ENGINEERS & ARCHITECTS LTD (HGE&A).
THE COPYRIGHT OF THIS DRAWING IS THE PROPERTY OF HGE&A.
REPRODUCTION OF THIS DESIGN OR DRAWING IS NOT
PERMITTED UNLESS PERMISSION IS OBTAINED FROM HGE&A

Hawthorn Geddes
engineers & architects ltd
7 Selwyn Avenue
Whangarei 0110
Phone: 09 438 7139
hg@hgea.co.nz
Unit 21a, The Grange
Warkworth 0910
Phone: 09 283 3428
www.hawthorngeddes.co.nz

CLIENT: SANCTUARY NORTH
PROJECT: PROPOSED SUBDIVISION
LOT 2 DP 430128
DRAWING: CROSS SECTIONS: CH 180 - 320

PROJECT No: 10737
SHEET: Figure 5

24/05/2019 11:30:51 AM K:\10737 Duck Trust Subdivision Suitability Lots 1 & 2 Robert Hastie Drive Mangawhai\10737 181129 PROPOSED ROAD v4.dwg

KDC - Approved Building Consent Document - BC210441 - Pg 60 of 336 - 30/08/2021 - ComplyNZ

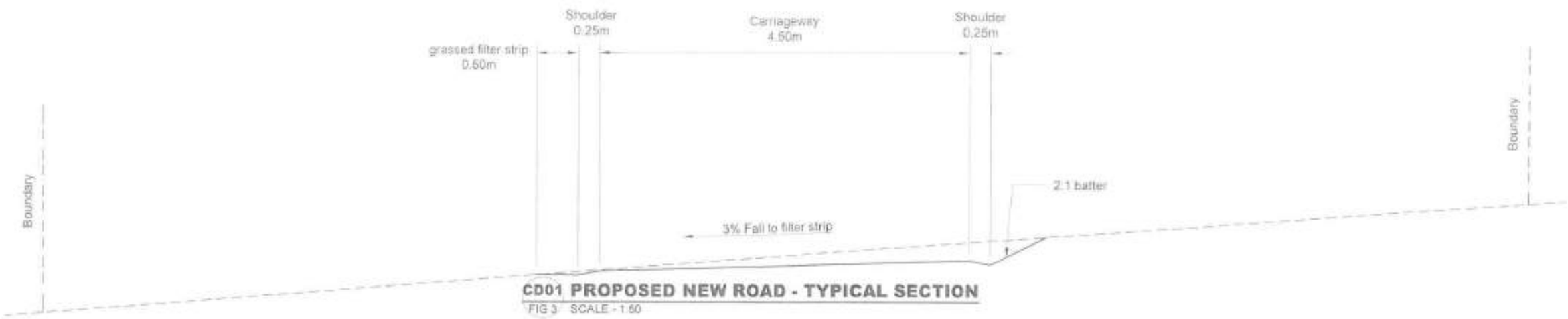

CD01 PROPOSED NEW ROAD - TYPICAL SECTION

FIG 3 SCALE - 1:50

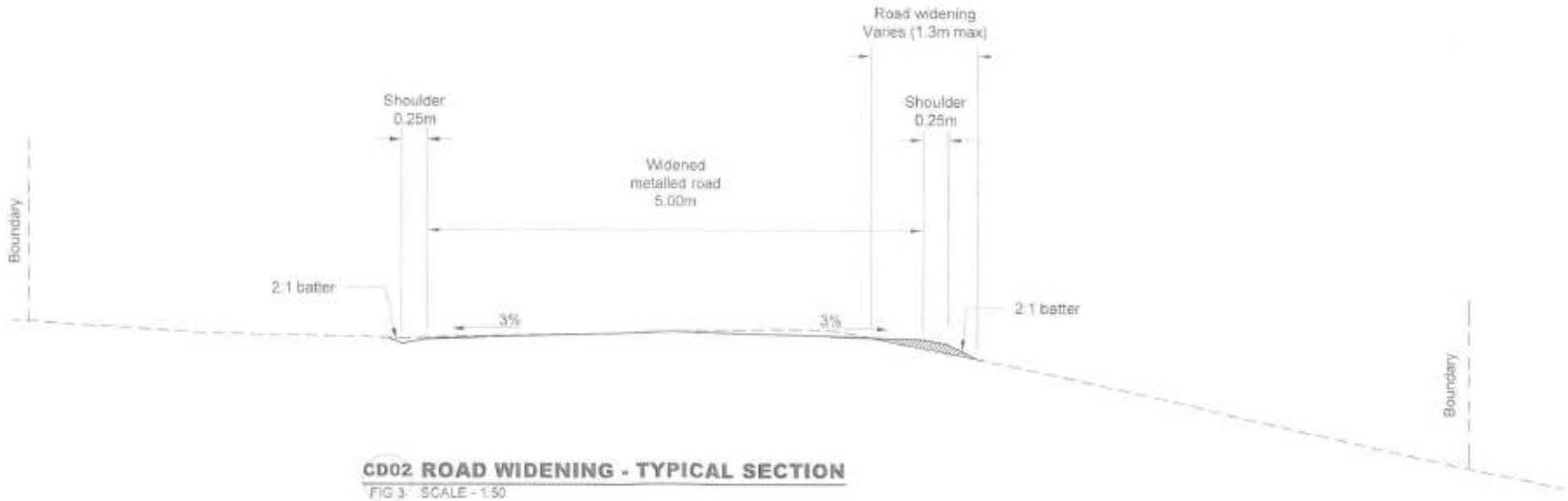

CD02 ROAD WIDENING - TYPICAL SECTION

FIG 3 SCALE - 1:50

USE WRITTEN DIMENSIONS. DO NOT SCALE FROM DRAWING.

© HAWTHORN GEDDES ENGINEERS & ARCHITECTS LTD (HGE&A)
THE COPYRIGHT OF THIS DRAWING IS THE PROPERTY OF HGE&A.
REPRODUCTION OF THIS DESIGN OR DRAWING IS NOT
PERMITTED UNLESS PERMISSION IS OBTAINED FROM HGE&A.

Hawthorn Geddes
engineers & architects ltd
7 Selwyn Avenue
Whangarei 0110
Phone: 09 438 7139
hg@hgea.co.nz

Unit 21a, The Grange
Warkworth 0910
Phone: 09 265 3428
www.hawthorngeddes.co.nz

CLIENT **SANCTUARY NORTH**
PROJECT **PROPOSED SUBDIVISION**
LOT 2 DP 430128
DRAWING **TYPICAL ROAD DETAILS**

PROJECT No. **10737**
SHEET **Figure 6**

24/05/2019 11:30:27 AM K:\10737 Duck Trust Subdivision Suitability Lots 1 & 2 Robert Hastie Drive Mangawhai\10737 181129 PROPOSED ROAD v4.dwg

KDC - Approved Building Consent Document - BC210441 - Pg 61 of 336 - 30/08/2021 - ComplyNZ

NOTE
SITE INFORMATION ADAPTED FROM SURVEY DRAWING PROVIDED BY TERRA CONSULTANTS REFERENCE 93003.
ALL INFORMATION MUST BE CONFIRMED ON SITE.
TO BE READ IN CONJUNCTION WITH HAWTHORN GEDDES ENGINEERS & ARCHITECTS LTD REPORT REFERENCE 10737

N

Existing watercourse

Stone apron outlet protection, 200mm - 400mm rock spalls, 0.8m depth

Wingwall outlet

600Ø culvert 20.5m long

Proposed new road

Wingwall inlet

Existing watercourse

SITE PLAN
SCALE - 1:500

Outlet protection apron
9.10m

Pipe invert to be 150mm - 300mm below the base of watercourse

DATUM: 4.00

PIPE SIZE & GRADIENT	20.38m of 600mm ø Reinforced Concrete @ 2.41%											
INVERT LEVEL		8.49						8.00				
CHAINAGE	0	5	10	15	20	25	30	35	40	45	50	

LONG SECTION
SCALE - 1:250

USE WRITTEN DIMENSIONS. DO NOT SCALE FROM DRAWING.

© HAWTHORN GEDDES ENGINEERS & ARCHITECTS LTD (HGE&A)
THE COPYRIGHT OF THIS DRAWING IS THE PROPERTY OF HGE&A.
REPRODUCTION OF THIS DESIGN OR DRAWING IS NOT PERMITTED UNLESS PERMISSION IS OBTAINED FROM HGE&A.

Hawthorn Geddes
engineers & architects ltd
7 Selwyn Avenue, Whangarei 0110, Phone: 09 438 7139, hg@hgea.co.nz
Unit 21a, The Grange, Warkworth 0910, Phone: 09 393 3429, www.hawthorngeddes.co.nz

CLIENT: SANCTUARY NORTH
PROJECT: PROPOSED SUBDIVISION
LOT 2 DP 430128
DRAWING: PROPOSED CULVERT

PROJECT No. 10737
SHEET: Figure 7

24/05/2019 11:31:13 AM K:\10737 Duck Trust Subdivision Suitability Lots 1 & 2 Robert Hastie Drive Mangawhai\10737 181129 PROPOSED ROAD v4.dwg

KDC - Approved Building Consent Document - BC210441 - Pg 62 of 336 - 30/08/2021 - ComplyNZ

Appendix B – Borehole Logs

Date: 20.08.19
Ref.:10737.R6

KDC - Approved Building Consent Document - BC210441 - Pg 63 of 336 - 30/08/2021 - ComplyNZ

Hawthorn Geddes engineers & architects ltd

LOG OF HAND AUGER

HA1

PAGE 1 OF 1

CLIENT David Nathan
PROJECT Duck Trust
PROJECT NUMBER 10737
PROJECT LOCATION Robert Hastie Drive, Mangawhai
START DATE 12/07/17 COMPLETED DATE 12/07/17
COORDINATES LEVEL 0.00
DRILLING CONTRACTOR HGEA
DRILLING METHOD 50mm handauger
LOGGED BY WNM
HOLE LOCATION On building platform on proposed Lot 98

DEPTH (m)	SCALA (Blows / 100mm)	TESTS	GRAPHIC LOG	MATERIAL DESCRIPTION	WATER	DEPTH (m)
0			TS	0.10 Clayey silt TOPSOIL with rootlets, dark brown, moist.		
				Silty CLAY, light brown, moist, high plasticity, stiff, moderately hard to auger.		
		SV = 143 / 70 kPa (GEO287)				
1		SV = 139 / 63 kPa (GEO287)				
		SV = 119 / 57 kPa (GEO287)		1.7m: Becoming mottled grey.		
		SV = 109 / 55 kPa (GEO287)		1.80 EOH: 1.80m		
2						
3						

Groundwater Not Encountered

PHOTO / SKETCH

WATER OBSERVATIONS

Date / Time	Water Level (m)	Type	Remarks

REMARKS

Target depth reached.

SYMBOLS

- Standing Water Level
- Water Out flow
- Water In flow

Produced with Core-GS

Hawthorn Geddes engineers & architects ltd

LOG OF HAND AUGER

HA2

PAGE 1 OF 1

CLIENT David Nathan
PROJECT Duck Trust
PROJECT NUMBER 10737
PROJECT LOCATION Robert Hastie Drive, Mangawhai
START DATE 12/07/17 COMPLETED DATE 12/07/17
COORDINATES LEVEL 0.00
DRILLING CONTRACTOR HGEA
DRILLING METHOD 50mm handauger
LOGGED BY CP
HOLE LOCATION On effluent disposal field on proposed Lot 98

DEPTH (m)	SCALA (Blows / 100mm)	TESTS	GRAPHIC LOG	MATERIAL DESCRIPTION	WATER	DEPTH (m)
0			TS	Clayey silt TOPSOIL, blackish brown, wet, rootlets, easy to auger.		
				0.20		
		SV = 140 / 50 kPa (GEO952)		Silty CLAY (CH) grey speckled orange and white, moist, highly plastic, moderately hard to auger, very stiff.	Groundwater Not Encountered	
		SV = 98 / 47 kPa (GEO952)		0.90 EOH: 0.90m		
1						
2						
3						

PHOTO / SKETCH

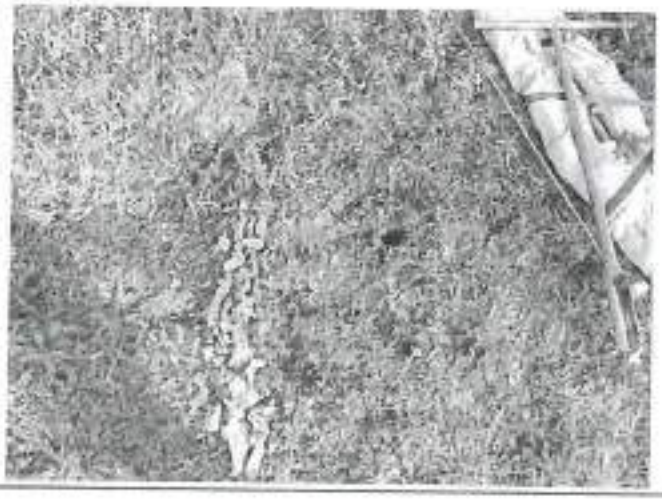

WATER OBSERVATIONS

Date / Time	Water Level (m)	Type	Remarks

REMARKS
Target depth reached

SYMBOLS
- Standing Water Level
- Water Out flow
- Water In flow

KDC - Approved Building Consent Document - BC210441 - Pg 64 of 336 - 30/08/2021 - ComplyNZ

Produced with Core-GS

Hawthorn Geddes engineers & architects ltd

LOG OF HAND AUGER

HA3

PAGE 1 OF 1

CLIENT David Nathan
PROJECT Duck Trust
PROJECT NUMBER 10737
PROJECT LOCATION Robert Hastie Drive, Mangawhai
START DATE 12/07/17 COMPLETED DATE 12/07/17
COORDINATES LEVEL 0.00
DRILLING CONTRACTOR HGEA
DRILLING METHOD 50mm handauger
LOGGED BY WNM
HOLE LOCATION On effluent disposal field on proposed Lot 97

DEPTH (m)	SCALA (Blows / 100mm)	TESTS	GRAPHIC LOG	MATERIAL DESCRIPTION	WATER	DEPTH (m)
0			TS	Silty clay TOPSOIL with rootlets, dark brown, saturated.	Groundwater Not Encountered	
				0.20 Silty CLAY, light brownish grey, wet, high plasticity, stiff, moderately easy to auger.		
		SV = 98 / 51 kPa (GEO287)				
1		SV = 103 / 55 kPa (GEO287)		0.90 EOH: 0.90m 0.9m: Becopming mottled orange.		
2						
3						

PHOTO / SKETCH

WATER OBSERVATIONS

Date / Time	Water Level (m)	Type	Remarks

REMARKS
Target depth reached

SYMBOLS
- Standing Water Level
- Water Out flow
- Water In flow

KDC - Approved Building Consent Document - BC210441 - Pg 65 of 336 - 30/08/2021 - ComplyNZ

Produced with Core-GS

Hawthorn Geddes engineers & architects ltd

LOG OF HAND AUGER

HA4

PAGE 1 OF 1

CLIENT David Nathan
PROJECT Duck Trust
PROJECT NUMBER 10737
PROJECT LOCATION Robert Hastie Drive, Mangawhai
START DATE 12/07/17 COMPLETED DATE 12/07/17 COORDINATES LEVEL 0.00
DRILLING CONTRACTOR HGEA
DRILLING METHOD 50mm handauger
LOGGED BY CP
HOLE LOCATION On boundary between proposed building platforms Lots 97 & 96

DEPTH (m)	SCALA (Blows / 100mm)	TESTS	GRAPHIC LOG	MATERIAL DESCRIPTION	WATER	DEPTH (m)
0			TS	Clayey silt TOPSOIL, blackish brown, wet, rootlets, easy to auger.	Groundwater Not Encountered	
				0.20 Silty CLAY (CH), dark greyish orange, moist, highly plastic, stiff moderately hard to auger.		
		SV = 93 / 12 kPa (GEO952)		0.3m: - becoming saturated		
				0.4m: - becoming more orange and moist.		
1		SV = 78 / 37 kPa (GEO952)		0.8m: - becoming wet		
				0.9m: - becoming greyish white with orange streaks		
				1.20 Clayey SILT (MH), greyish white with orange streaks, moist to wet, highly plastic, very stiff, moderately hard to auger.		
		SV = 113 / 31 kPa (GEO952)				
		SV = 109 / 25 kPa (GEO952)		1.80 EOH: 1.80m		
2						
3						

PHOTO / SKETCH



WATER OBSERVATIONS

Date / Time	Water Level (m)	Type	Remarks

REMARKS
Target depth reached

SYMBOLS
- Standing Water Level
- Water Out flow
- Water In flow

KDC - Approved Building Consent Document - BC210441 - Pg 66 of 336 - 30/08/2021 - ComplyNZ

Produced with Core-GS

KDC - Approved Building Consent Document - BC210441 - Pg 67 of 336 - 30/08/2021 - ComplyNZ

Hawthorn Geddes engineers & architects ltd

LOG OF HAND AUGER

HA5

PAGE 1 OF 1

CLIENT David Nathan
PROJECT Duck Trust
PROJECT NUMBER 10737
PROJECT LOCATION Robert Hastie Drive, Mangawhai
START DATE 12/07/17 COMPLETED DATE 12/07/17
COORDINATES LEVEL 0.00
DRILLING CONTRACTOR HGEA
DRILLING METHOD 50mm handauger
LOGGED BY WNM
HOLE LOCATION On proposed effluent disposal field, proposed Lot 96

DEPTH (m)	SCALA (Blows / 100mm)	TESTS	GRAPHIC LOG	MATERIAL DESCRIPTION	WATER	DEPTH (m)
0			TS	Clayey silt TOPSOIL with rootlets, dark brown, moist, moderately easy to auger.		
				0.20		
				Silty CLAY, dark brown mottled orange, moist, high plasticity, stiff, moderately hard to auger.		
		SV = 130 / 49 kPa (GEO287)				
				0.5m: Becoming light brown mottled grey.		
				0.90 EOH: 0.90m		
1		SV = 95 / 48 kPa (GEO287)				
2						
3						

Groundwater Not Encountered

PHOTO / SKETCH

WATER OBSERVATIONS

Date / Time	Water Level (m)	Type	Remarks

REMARKS

Target depth reached.

SYMBOLS

- Standing Water Level
- Water Out flow
- Water In flow

Produced with Core-GS

KDC - Approved Building Consent Document - BC210441 - Pg 68 of 336 - 30/08/2021 - ComplyNZ

Hawthorn Geddes engineers & architects ltd

LOG OF HAND AUGER

HA6

PAGE 1 OF 1

CLIENT David Nathan
PROJECT NUMBER 10737
START DATE 12/07/17 COMPLETED DATE 12/07/17
DRILLING CONTRACTOI HGEA
DRILLING METHOC 50mm handauger
LOGGED BY CP
HOLE LOCATION On building platform on proposed Lot 95

PROJECT Duck Trust
PROJECT LOCATION Robert Hastie Drive, Mangawhai
COORDINATES
LEVEL 0.00

DEPTH (m)	SCALA (Blows / 100mm)	TESTS	GRAPHIC LOG	MATERIAL DESCRIPTION	WATER	DEPTH (m)
0			TS	Clayey silt TOPSOIL, blackish brown, wet, rootlets, easy to auger		
				0.20		
		SV = 158 / 65 kPa (GEO952)		Silty CLAY (CH) greyish orange, moist, highly plastic, very stiff, moderately hard to auger.		
		SV = 70 / 34 kPa (GEO952)				
1		SV = 74 / 28 kPa (GEO952)			12/07/2017	
				1.5m - hole squeezing		
		SV = 104 / 23 kPa (GEO952)				
2				2.20		
		SV = UTP (GEO952)		Clayey SILT (MH) brownish grey, moist, highly plastic, very stiff, hard to auger (MUDSTONE)		
		SV = UTP (GEO952)		2.50 EOH: 2.50m		
3						

PHOTO / SKETCH



WATER OBSERVATIONS

Date / Time	Water Level (m)	Type	Remarks
12/07/2017 12:00:00 a.m.	1.40	Static Water Level	

REMARKS

Target depth reached.

SYMBOLS

- Standing Water Level
- Water Out flow
- Water In flow

Produced with Core-GS

Hawthorn Geddes
engineers & architects ltd

LOG OF HAND AUGER

HA7
PAGE 1 OF 1

CLIENT David Nathan
PROJECT Duck Trust
PROJECT NUMBER 10737
PROJECT LOCATION Robert Hastie Drive, Mangawhai
START DATE 12/07/17 COMPLETED DATE 12/07/17
COORDINATES LEVEL 0.00
DRILLING CONTRACTOR HGEA
DRILLING METHOD 50mm handauger
LOGGED BY WNM
HOLE LOCATION On effluent disposal field, proposed Lot 91

DEPTH (m)	SCALA (Blows / 100mm)	TESTS	GRAPHIC LOG	MATERIAL DESCRIPTION	WATER	DEPTH (m)
0			TS	Clayey silt TOPSOIL with rootlets, dark brownish grey, saturated, easy to auger.	Groundwater Not Encountered	
0.15				Silty CLAY, yellow brown speckled grey, moist, high plasticity, stiff, moderately hard to auger.		
		SV = 155 / 79 kPa (GEO287)				
				0.5m: Becoming grey mottled orange.		
		SV = 95 / 44 kPa (GEO287)				
0.90				EOH: 0.90m		
1						
2						
3						

PHOTO / SKETCH

WATER OBSERVATIONS

Date / Time	Water Level (m)	Type	Remarks

REMARKS
Target depth reached.

SYMBOLS
- Standing Water Level
- Water Out flow
- Water In flow

KDC - Approved Building Consent Document - BC210441 - Pg 69 of 336 - 30/08/2021 - ComplyNZ

Produced with Core-GS

Hawthorn Geddes engineers & architects ltd

LOG OF HAND AUGER

HA8

PAGE 1 OF 1

CLIENT David Nathan
PROJECT Duck Trust
PROJECT NUMBER 10737
PROJECT LOCATION Robert Hastie Drive, Mangawhai
START DATE 12/07/17 COMPLETED DATE 12/07/17
COORDINATES LEVEL 0.00
DRILLING CONTRACTOR HGEA
DRILLING METHOD 50mm handauger
LOGGED BY CP
HOLE LOCATION On proposed effluent disposal field, proposed Lot 92

DEPTH (m)	SCALA (Blows / 100mm)	TESTS	GRAPHIC LOG	MATERIAL DESCRIPTION	WATER	DEPTH (m)
0			TS	0.10 Clayey silt TOPSOIL with rootlets, dark brownish black, saturated, easy to auger.		
		SV = 132 / 63 kPa (GEO287)		Sandy clayey SILT, dark grey mottled orange, wet high plasticity, stiff, moderately easy to auger.		
				0.40 Silty sandy CLAY, orange brown, moist, high plasticity, stiff, moderately hard to auger.		
1		SV = 114 / 49 kPa (GEO287)				
		SV = 111 / 52 kPa (GEO287)				
				1.70 Clayey SILT, orange brown mottled grey, saturated, dilative, low plasticity, firm, very easy to auger.	12/07/2017	
2		SV = 29 / 13 kPa (GEO287)				
		SV = 79 / 35 kPa (GEO287)				
				2.70 EOH: 2.70m		
3		SV = 81 / 32 kPa (GEO287)				

PHOTO / SKETCH

WATER OBSERVATIONS

Date / Time	Water Level (m)	Type	Remarks
12/07/2017 12:00:00 a.m.	1.70	Static Water Level	

REMARKS

Target depth reached.

SYMBOLS

- Standing Water Level
- Water Out flow
- Water In flow

KDC - Approved Building Consent Document - BC210441 - Pg 70 of 336 - 30/08/2021 - ComplyNZ

Produced with Core-GS

Hawthorn Geddes
engineers & architects ltd

LOG OF HAND AUGER

HA9
PAGE 1 OF 1

CLIENT David Nathan
PROJECT Duck Trust
PROJECT NUMBER 10737
PROJECT LOCATION Robert Hastie Drive, Mangawhai
START DATE 12/07/17 COMPLETED DATE 12/07/17
COORDINATES LEVEL 0.00
DRILLING CONTRACTOR HGEA
DRILLING METHOD 50mm handauger
LOGGED BY WNM
HOLE LOCATION On proposed effluent disposal field, proposed Lot 93

DEPTH (m)	SCALA (Blows / 100mm)	TESTS	GRAPHIC LOG	MATERIAL DESCRIPTION	WATER	DEPTH (m)
0			TS	Clayey silt TOPSOIL, blackish brown, wet, easy to auger, rootlets.		
				0.20		
		SV = 121 / 39 kPa (GEO952)		Sandy silty CLAY (CH) greyish yellow, moist, highly plastic, very stiff, moderately hard to auger.	12/07/2017	
		SV = 93 / 37 kPa (GEO952)				
1		SV = 76 / 25 kPa (GEO952)		1.3m - becoming easy to auger		
		SV = 65 / 16 kPa (GEO952)		1.80 EOH: 1.80m		
2						
3						

PHOTO / SKETCH

WATER OBSERVATIONS

Date / Time	Water Level (m)	Type	Remarks
12/07/2017 2:00:00 p.m.	0.70	Static Water Level	

REMARKS
Hole abandoned at 1.8 due to very heavy rain

SYMBOLS
Standing Water Level
Water Out flow
Water In flow

KDC - Approved Building Consent Document - BC210441 - Pg 71 of 336 - 30/08/2021 - ComplyNZ

Produced with Core-GS

Hawthorn Geddes engineers & architects ltd

LOG OF HAND AUGER

HA10

PAGE 1 OF 1

CLIENT David Nathan
PROJECT Duck Trust
PROJECT NUMBER 10737
PROJECT LOCATION Robert Hastie Drive, Mangawhai
START DATE 19/07/17 COMPLETED DATE 19/07/17
COORDINATES LEVEL 0.00
DRILLING CONTRACTOR HGEA
DRILLING METHOD 50mm handauger
LOGGED BY WNM
HOLE LOCATION On proposed effluent disposal field on proposed lot 94

DEPTH (m)	SCALA (Blows / 150mm)	TESTS	GRAPHIC LOG	MATERIAL DESCRIPTION	WATER	DEPTH (m)
			TS	0.10 Clayey silt TOPSOIL, dark brown, moist, easy to auger.		
		SV = 98 / 40 kPa (GEO287)		Silty CLAY (CH) with minor fine sand, brownish grey, moist, high plasticity, stiff, easy to auger.		
				0.6m: Becoming light yellowish grey.		
		SV = 36 / 24 kPa (GEO287)				
1				1.0m: Wet.		
		SV = 48 / 19 kPa (GEO287)				
				1.60 Clayey SILT (ML), greyish brown, moist, low plasticity, friable, hard, hard to auger.	Groundwater Not Encountered	
		SV = UTP (GEO287)				
2				2.10 Sandy SILT (ML) with trace clay, grey, dry, low plasticity, friable, hard, very hard to auger.		
		SV = UTP (GEO287)		2.40 EOH: 2.40m		
		SV = UTP (GEO287)		2.4m: Auger spinning, very poor recovery.		
3						

PHOTO / SKETCH

WATER OBSERVATIONS

Date / Time	Water Level (m)	Type	Remarks

REMARKS

Auger refusal at 2.4m

SYMBOLS

- Standing Water Level
- Water Out flow
- Water In flow

KDC - Approved Building Consent Document - BC210441 - Pg 72 of 336 - 30/08/2021 - ComplyNZ

Produced with Core-GS

KDC - Approved Building Consent Document - BC210441 - Pg 73 of 336 - 30/08/2021 - ComplyNZ

Hawthorn Geddes engineers & architects ltd

LOG OF HAND AUGER

HA11

PAGE 1 OF 1

CLIENT David Nathan
PROJECT Duck Trust
PROJECT NUMBER 10737
PROJECT LOCATION Robert Hastie Drive, Mangawhai
START DATE 19/07/17 COMPLETED DATE 19/07/17
COORDINATES LEVEL 0.00
DRILLING CONTRACTOR HGEA
DRILLING METHOD 50mm handauger
LOGGED BY CP
HOLE LOCATION Southern corner of proposed effluent disposal field on proposed lot 86

DEPTH (m)	SCALA (Blows / 100mm)	TESTS	GRAPHIC LOG	MATERIAL DESCRIPTION	WATER	DEPTH (m)
0				0.10 Clayey silt TOPSOIL with rootlets, black, moist, easy to auger.		
				Silty CLAY (CH), light brownish orange, moist, high plasticity, very stiff, moderately hard to auger.		
		SV = 141 / 44 kPa (DR4604)		0.3m: Becoming hard to auger.		
		SV = 150 / 67 kPa (DR4604)		0.8m: Becoming greyish orange.		
1		SV = 141 / 53 kPa (DR4604)				
				1.5m: Becoming wet, and grey mottled orange.		
		SV = 153 / 65 kPa (DR4604)		1.80 EOH: 1.80m		
2						
3						

Groundwater Not Encountered

PHOTO / SKETCH

WATER OBSERVATIONS

Date / Time	Water Level (m)	Type	Remarks

REMARKS
Target depth reached

SYMBOLS
- Standing Water Level
- Water Out flow
- Water In flow

Produced with Core-GS

Hawthorn Geddes engineers & architects ltd

LOG OF HAND AUGER

HA12

PAGE 1 OF 1

CLIENT David Nathan
PROJECT Duck Trust
PROJECT NUMBER 10737
PROJECT LOCATION Robert Hastie Drive, Mangawhai
START DATE 19/07/17 COMPLETED DATE 19/07/17
COORDINATES LEVEL 0.00
DRILLING CONTRACTOR HGEA
DRILLING METHOD 50mm handauger
LOGGED BY CP
HOLE LOCATION On boundary between proposed building platforms and effluent fields Lots 87 & 88

DEPTH (m)	SCALA (Blows / 100mm)	TESTS	GRAPHIC LOG	MATERIAL DESCRIPTION	WATER	DEPTH (m)
0			TS	0.10 Clayey silt TOPSOIL with rootlets, brownish black, moist, easy to auger.		
				Silty CLAY (CH), light brownish grey, moist, high plasticity, very stiff, easy to auger.		
		SV = 164 / 56 kPa (DR4604)		0.3m: Becoming hard to auger.		
		SV = 123 / 62 kPa (DR4604)		0.8m: Becoming greyish orange.		
1		SV = 114 / 50 kPa (DR4604)				
		SV = 120 / 58 kPa (DR4604)		1.80 EOH: 1.80m		
2						
3						

Groundwater Not Encountered

PHOTO / SKETCH

WATER OBSERVATIONS

Date / Time	Water Level (m)	Type	Remarks

REMARKS
Target depth reached

SYMBOLS
Standing Water Level
Water Out flow
Water In flow

KDC - Approved Building Consent Document - BC210441 - Pg 74 of 336 - 30/08/2021 - ComplyNZ

Produced with Core-GS

KDC - Approved Building Consent Document - BC210441 - Pg 75 of 336 - 30/08/2021 - ComplyNZ

Hawthorn Geddes engineers & architects ltd

LOG OF HAND AUGER

HA 13

PAGE 1 OF 1

CLIENT David Nathan
PROJECT Duck Trust
PROJECT NUMBER 10737
PROJECT LOCATION Robert Hastie Drive, Mangawhai
START DATE 19/07/17 COMPLETED DATE 19/07/17
COORDINATES LEVEL 0.00
DRILLING CONTRACTOR HGEA
DRILLING METHOD 50mm handauger
LOGGED BY WNM
HOLE LOCATION Bteween proposed building platform and effluent disposal field Lot 89

DEPTH (m)	SCALA (Blows / 100mm)	TESTS	GRAPHIC LOG	MATERIAL DESCRIPTION	WATER	DEPTH (m)
0			TS	0.10 Clayey silt TOPSOIL, dark brown, moist, easy to auger.	Groundwater Not Encountered	
				Silty sandy CLAY (CH), greyish brown mottled orange brown, moist, high plasticity, very stiff, moderately hard to auger.		
		SV = 155 / 85 kPa (GEO287)				
1		SV = 111 / 59 kPa (GEO287)				
		SV = 95 / 48 kPa (GEO287)		1.5m Becoming bluish grey.		
		SV = 111 / 52 kPa (GEO287)		1.80 EOH: 1.80m		
2						
3						

PHOTO / SKETCH

WATER OBSERVATIONS

Date / Time	Water Level (m)	Type	Remarks

REMARKS

Target depth reached

SYMBOLS

- Standing Water Level
- Water Out flow
- Water In flow

Produced with Core-GS

Hawthorn Geddes engineers & architects ltd

LOG OF HAND AUGER

HA14

PAGE 1 OF 1

CLIENT David Nathan
PROJECT Duck Trust
PROJECT NUMBER 10737
PROJECT LOCATION Robert Hastie Drive, Mangawhai
START DATE 19/07/17 COMPLETED DATE 19/07/17
COORDINATES LEVEL 0.00
DRILLING CONTRACTOR HGEA
DRILLING METHOD 50mm handauger
LOGGED BY CP
HOLE LOCATION Bteween proposed building platform and effluent disposal field Lot 90

DEPTH (m)	SCALA (Blows / 100mm)	TESTS	GRAPHIC LOG	MATERIAL DESCRIPTION	WATER	DEPTH (m)
				Clayey silt TOPSOIL with rootlets, blackish brown, wet, very easy to auger.		
				0.15 Silty CLAY (CH), light greyish brown, moist, high plasticity, very stiff, easy to auger.		
		SV = 117 / 41 kPa (DR4604)		0.3m: Becoming moderately hard to auger.		
		SV = 98 / 109 kPa (DR4604)		0.8m: Becoming wet.		
1				1.0m: Becoming light grey mottled orange.		
		SV = 67 / 29 kPa (DR4604)		1.3m: Becoming soft.		
		SV = 82 / 44 kPa (DR4604)		1.80 EOH: 1.80m		
2						
3						

Groundwater Not Encountered

PHOTO / SKETCH

WATER OBSERVATIONS

Date / Time	Water Level (m)	Type	Remarks

REMARKS

Target depth reached.

SYMBOLS

- Standing Water Level
- Water Out flow
- Water In flow

KDC - Approved Building Consent Document - BC210441 - Pg 76 of 336 - 30/08/2021 - ComplyNZ

Produced with Core-GS

Hawthorn Geddes engineers & architects ltd

LOG OF HAND AUGER

HA15

PAGE 1 OF 1

CLIENT David Nathan
PROJECT Duck Trust
PROJECT NUMBER 10737
PROJECT LOCATION Robert Hastie Drive, Mangawhai
START DATE 21/07/17 COMPLETED DATE 21/07/17
COORDINATES LEVEL 0.00
DRILLING CONTRACTOR HGEA
DRILLING METHOD 50mm handauger
LOGGED BY WNM
HOLE LOCATION On proposed effluent disposal field Lot 85

DEPTH (m)	SCALA (Blows / 100mm)	TESTS	GRAPHIC LOG	MATERIAL DESCRIPTION	WATER	DEPTH (m)
0			TS	Clayey silt TOPSOIL with rootlets, dark brown, moist, easy to auger.		
				0.20		
		SV = 182 / 75 kPa (GEO287)		Silty CLAY (CH), orange brown mottled dark brown, moist, high plasticity, very stiff, moderately hard to auger.		
				0.5m: Becoming orange brown with minor fine sand.		
1		SV = 166 / 68 kPa (GEO287)				
		SV = 130 / 80 kPa (GEO287)		1.5m: Becoming light greyish brown.		
				1.80		
2		SV = 122 / 52 kPa (GEO287)		Clayey sandy SILT (ML), light greyish brown mottled orange brown, moist, stiff, low plasticity, easy to auger.	21/07/2017	
				2.0m: Squeezing and poor progression.		
		SV = 65 / 52 kPa (GEO287)		2.30 EOH: 2.30m		
3				2.3m: Hole abandoned due to squeezing.		

PHOTO / SKETCH

WATER OBSERVATIONS

Date / Time	Water Level (m)	Type	Remarks
21/07/2017 12:00:00 p.m	1.90	Inflow	

REMARKS

Abandoned due to squeezing

SYMBOLS

- Standing Water Level
- Water Out flow
- Water In flow

KDC - Approved Building Consent Document - BC210441 - Pg 77 of 336 - 30/08/2021 - ComplyNZ

Produced with Core-GS

Hawthorn Geddes engineers & architects ltd

LOG OF HAND AUGER

HA16

PAGE 1 OF 1

CLIENT David Nathan
PROJECT Duck Trust
PROJECT NUMBER 10737
PROJECT LOCATION Robert Hastie Drive, Mangawhai
START DATE 19/07/17 COMPLETED DATE 19/07/17
COORDINATES LEVEL 0.00
DRILLING CONTRACTOR HGEA
DRILLING METHOD 50mm handauger
LOGGED BY CP
HOLE LOCATION On proposed building platform Lot 84

DEPTH (m)	SCALA (Blows / 100mm)	TESTS	GRAPHIC LOG	MATERIAL DESCRIPTION	WATER	DEPTH (m)
			TS	0.10 Clayey silt TOPSOIL with rootlets, brown, saturated, very easy to auger.		
		SV = 36 / 4 kPa (DR4604)		Sandy clayey SILT (MH), brown, wet, high plasticity, very easy to auger.		
				0.70 Sandy clayey SILT (ML), grey mottled orange, wet, low plasticity, very stiff, moderately hard to auger.		
1		SV = 161 / 73 kPa (DR4604)		1.0m: Becoming more orange and less sandy.		
		SV = 117 / 67 kPa (DR4604)				
	2	SV = 128 / 62 kPa (DR4604)		1.80 EOH 1.80m		
2	2					
	3					
	3					
	4					
	6					
	7					
	9					
	9					
3						

Groundwater Not Encountered

PHOTO / SKETCH

WATER OBSERVATIONS

Date / Time	Water Level (m)	Type	Remarks

REMARKS

Target depth reached

SYMBOLS

- Standing Water Level
- Water Out flow
- Water In flow

KDC - Approved Building Consent Document - BC210441 - Pg 78 of 336 - 30/08/2021 - ComplyNZ

Produced with Core-GS

KDC - Approved Building Consent Document - BC210441 - Pg 79 of 336 - 30/08/2021 - ComplyNZ

Hawthorn Geddes engineers & architects ltd

LOG OF HAND AUGER

HA17

PAGE 1 OF 1

CLIENT David Nathan
PROJECT Duck Trust
PROJECT NUMBER 10737
PROJECT LOCATION Robert Hastie Drive, Mangawhai
START DATE 19/07/17 COMPLETED DATE 19/07/17
COORDINATES LEVEL 0.00
DRILLING CONTRACTOR HGEA
DRILLING METHOD 50mm handauger
LOGGED BY WNM
HOLE LOCATION On proposed effluent disposal field Lot 84

DEPTH (m)	SCALA (Blows / 100mm)	TESTS	GRAPHIC LOG	MATERIAL DESCRIPTION	WATER	DEPTH (m)
			TS	0.10 Clayey sandy silt TOPSOIL with rootlets, brown, saturated, very easy to auger.	Groundwater Not Encountered	
		SV = 139 / 8 kPa (GEO287)		Clayey sandy SILT (ML), dark grey mottled orange brown, saturated, very stiff, low plasticity, easy to auger. 0.30		
		SV = 127 / 55 kPa (GEO287)		0.40 Sandy clayey SILT (ML), whitish grey mottled light brown, moist, low plasticity, very stiff, friable, fine sand, moderately hard to auger.		
		SV = 174 / 76 kPa (GEO287)		Silty CLAY (CH) with trace fine sand, orange brown mottled grey, moist, high plasticity, very stiff, moderately hard to auger. 0.4m: High sand content. 0.6m: Becoming light grey mottled light brown.		
1		SV = 143 / 63 kPa (GEO287)		1.2m: Becoming saturated.		
	20	SV = UTP (GEO287)		1.30 Silty SAND (SP), orange brown, moist, fine sand, very dense.		
	15			1.50 EOH: 1.50m		
	5			1.3m: Auger spinning, very poor recovery.		
	5			1.4m: Auger refusal.		
	6					
2						
3						

PHOTO / SKETCH

WATER OBSERVATIONS

Date / Time	Water Level (m)	Type	Remarks

REMARKS

SYMBOLS
Standing Water Level
Water Out flow
Water In flow

Produced with Core-GS

Hawthorn Geddes engineers & architects ltd

LOG OF HAND AUGER

HA18

PAGE 1 OF 1

CLIENT David Nathan
PROJECT Duck Trust
PROJECT NUMBER 10737
PROJECT LOCATION Robert Hastie Drive, Mangawhai
START DATE 21/07/17 COMPLETED DATE 21/07/17
COORDINATES LEVEL 0.00
DRILLING CONTRACTOR HGEA
DRILLING METHOD 50mm handauger
LOGGED BY WNM
HOLE LOCATION On proposed effluent disposal field Lot 83

DEPTH (m)	SCALA (Blows / 100mm)	TESTS	GRAPHIC LOG	MATERIAL DESCRIPTION	WATER	DEPTH (m)
0			TS	Clayey silt TOPSOIL with rootlets, dark greyish brown, saturated, very easy to auger.	Groundwater Not Encountered	0
				0.25		
	20			Sandy SILT (ML) with minor clay, dark grey mottled orange, saturated, low plasticity, hard, hard to auger.		
				0.35		
				Silty SAND (SP), dark orange, dry, hard, very dense.		
				0.45		
				EOH: 0.45m		
				0.4m: Auger spinning, no recovery		
1						1
2						2
3						3

PHOTO / SKETCH

WATER OBSERVATIONS

Date / Time	Water Level (m)	Type	Remarks

REMARKS

SYMBOLS

- Standing Water Level
- Water Out flow
- Water In flow

KDC - Approved Building Consent Document - BC210441 - Pg 80 of 336 - 30/08/2021 - ComplyNZ

Produced with Core-GS

KDC - Approved Building Consent Document - BC210441 - Pg 81 of 336 - 30/08/2021 - ComplyNZ

Hawthorn Geddes engineers & architects ltd

LOG OF HAND AUGER

HA19

PAGE 1 OF 1

CLIENT David Nathan
PROJECT Duck Trust
PROJECT NUMBER 10737
PROJECT LOCATION Robert Hastie Drive, Mangawhai
START DATE 19/07/17 COMPLETED DATE 19/07/17
COORDINATES LEVEL 0.00
DRILLING CONTRACTOR HGEA
DRILLING METHOD 50mm handauger
LOGGED BY WNM
HOLE LOCATION On proposed building platform Lot 82

DEPTH (m)	SCALA (Blows / 100mm)	TESTS	GRAPHIC LOG	MATERIAL DESCRIPTION	WATER	DEPTH (m)
0			TS	0.10 Silty sandy TOPSOIL with rootlets, dark brown, moist, easy to auger.		
		SV = 174 / 55 kPa (GEO287)		Sandy SILT with some clay, dark brown, moist, low plasticity, very stiff, easy to auger.		
				0.50 Sandy silty CLAY, orange brown, moist, high plasticity, very stiff, moderately hard to auger.		
		SV = 174 / 79 kPa (GEO287)		0.8m: Trace sand.		
1		SV = 174 / 79 kPa (GEO287)		1.1m: Becoming mottled grey.	Groundwater Not Encountered	
		SV = 159 / 63 kPa (GEO287)				
2		SV = 119 / 55 kPa (GEO287)				
		SV = 111 / 48 kPa (GEO287)				
		SV = 82 / 38 kPa (GEO287)		2.70 EOH: 2.70m		
3						

PHOTO / SKETCH

WATER OBSERVATIONS

Date / Time	Water Level (m)	Type	Remarks

REMARKS

Target depth reached.

SYMBOLS

- Standing Water Level
- Water Out flow
- Water In flow

Produced with Core-GS

Hawthorn Geddes engineers & architects ltd

LOG OF HAND AUGER

HA20

PAGE 1 OF 1

CLIENT David Nathan
PROJECT Duck Trust
PROJECT NUMBER 10737
PROJECT LOCATION Robert Hastie Drive, Mangawhai
START DATE 21/07/17 COMPLETED DATE 21/07/17
COORDINATES LEVEL 0.00
DRILLING CONTRACTOR HGEA
DRILLING METHOD 50mm handauger
LOGGED BY WNM
HOLE LOCATION On proposed effluent disposal field Lot 82

DEPTH (m)	SCALA (Blows / 100mm)	TESTS	GRAPHIC LOG	MATERIAL DESCRIPTION	WATER	DEPTH (m)
0			TS	Silty sandy clay TOPSOIL with rootlets, dark brown, wet, easy to auger		
				0.15		
		SV = 190 / 60 kPa (GEO287)		Clayey SILT (MH) with minor fine sand, orange brown, moist, high plasticity, very stiff, moderately hard to auger.		
				0.50		
				Silty CLAY (CH) with trace fine sand, orange brown mottled light grey, moist, high plasticity, very stiff, moderately hard to auger.		
1		SV = 147 / 75 kPa (GEO287)			Groundwater Not Encountered	
		SV = 79 / 33 kPa (GEO287)		1.3m: Becoming light grey		
				1.80 EOH: 1.80m		
2		SV = 114 / 29 kPa (GEO287)				
3						

PHOTO / SKETCH

WATER OBSERVATIONS

Date / Time	Water Level (m)	Type	Remarks

REMARKS

Target depth reached

SYMBOLS

- Standing Water Level
- Water Out flow
- Water In flow

KDC - Approved Building Consent Document - BC210441 - Pg 82 of 336 - 30/08/2021 - ComplyNZ

Produced with Core-GS

KDC - Approved Building Consent Document - BC210441 - Pg 83 of 336 - 30/08/2021 - ComplyNZ

Hawthorn Geddes engineers & architects ltd

LOG OF HAND AUGER

HA21

PAGE 1 OF 1

CLIENT David Nathan
PROJECT Duck Trust
PROJECT NUMBER 10737
PROJECT LOCATION Robert Hastie Drive, Mangawhai
START DATE 19/07/17 COMPLETED DATE 19/07/17
COORDINATES LEVEL 0.00
DRILLING CONTRACTOR HGEA
DRILLING METHOD 50mm handauger
LOGGED BY CP
HOLE LOCATION On proposed effluent disposal field Lot 81

DEPTH (m)	SCALA (Blows / 100mm)	TESTS	GRAPHIC LOG	MATERIAL DESCRIPTION	WATER	DEPTH (m)
0				0.05 Clayey silt TOPSOIL with rootlets, brown, wet, easy to auger.		
				Silty sandy CLAY (FILL) with trace gravels, yellowish orange mottled grey, moist, high plasticity, bluish grey gravels MPS 6mm.		
		SV = 70 / 35 kPa (DR4604)		0.40 Clayey sandy SILT (MH), greyish yellow, moist, high plasticity, stiff, moderately hard to auger.		
		SV = 147 / 70 kPa (DR4604)		0.7m: Becoming wet.		
1		SV = 136 / 56 kPa (DR4604)		1.2m: Light whitish yellow.	Groundwater Not Encountered	
		SV = 123 / 53 kPa (DR4604)				
2		SV = 138 / 53 kPa (DR4604)				
		SV = 123 / 44 kPa (DR4604)				
		SV = 114 / 32 kPa (DR4604)		2.70 EOH: 2.70m		
3						

PHOTO / SKETCH

WATER OBSERVATIONS

Date / Time	Water Level (m)	Type	Remarks

REMARKS

Target depth reached.

SYMBOLS

- Standing Water Level
- Water Out flow
- Water In flow

Produced with Core-GS

Hawthorn Geddes engineers & architects ltd

LOG OF HAND AUGER

HA22

PAGE 1 OF 1

CLIENT David Nathan
PROJECT Duck Trust
PROJECT NUMBER 10737
PROJECT LOCATION Robert Hastie Drive, Mangawhai
START DATE 21/07/17 COMPLETED DATE 21/07/17
COORDINATES LEVEL 0.00
DRILLING CONTRACTOR HGEA
DRILLING METHOD 50mm handauger
LOGGED BY WNM
HOLE LOCATION On proposed effluent disposal field Lot 81

DEPTH (m)	SCALA (Blows / 100mm)	TESTS	GRAPHIC LOG	MATERIAL DESCRIPTION	WATER	DEPTH (m)
			TS	0.10 Silty clay TOPSOIL with rootlets, dark brown, wet, easy to auger.	Groundwater Not Encountered	
				0.20 Sandy SILT (ML), whitish grey, moist, friable, low plasticity, hard, very hard to auger.		
				Clayey sandy SILT (ML), dark greyish brown, saturated, fine sand, low plasticity, 0.35 very easy to auger.		
		SV = UTP (GEO287)		Silty SAND (SP), orange, moist, very dense, very hard to auger. 0.50		
				Silty sandy CLAY (CH), whitish grey mottled orange, moist, very stiff, high plasticity, moderately hard to auger.		
1		SV = 106 / 52 kPa (GEO287)		0.90 EOH: 0.90m		
				0.9m: Abandoned at 0.90m due to heavy rain.		
2						
3						

PHOTO / SKETCH

WATER OBSERVATIONS

Date / Time	Water Level (m)	Type	Remarks

REMARKS

SYMBOLS

- Standing Water Level
- Water Out flow
- Water In flow

KDC - Approved Building Consent Document - BC210441 - Pg 84 of 336 - 30/08/2021 - ComplyNZ

Produced with Core-GS

KDC - Approved Building Consent Document - BC210441 - Pg 85 of 336 - 30/08/2021 - ComplyNZ

Appendix C – Stormwater Calculations

Date: 20.08.19
Ref.:10737.RB

KDC - Approved Building Consent Document - BC210441 - Pg 86 of 336 - 30/08/2021 - ComplyNZ

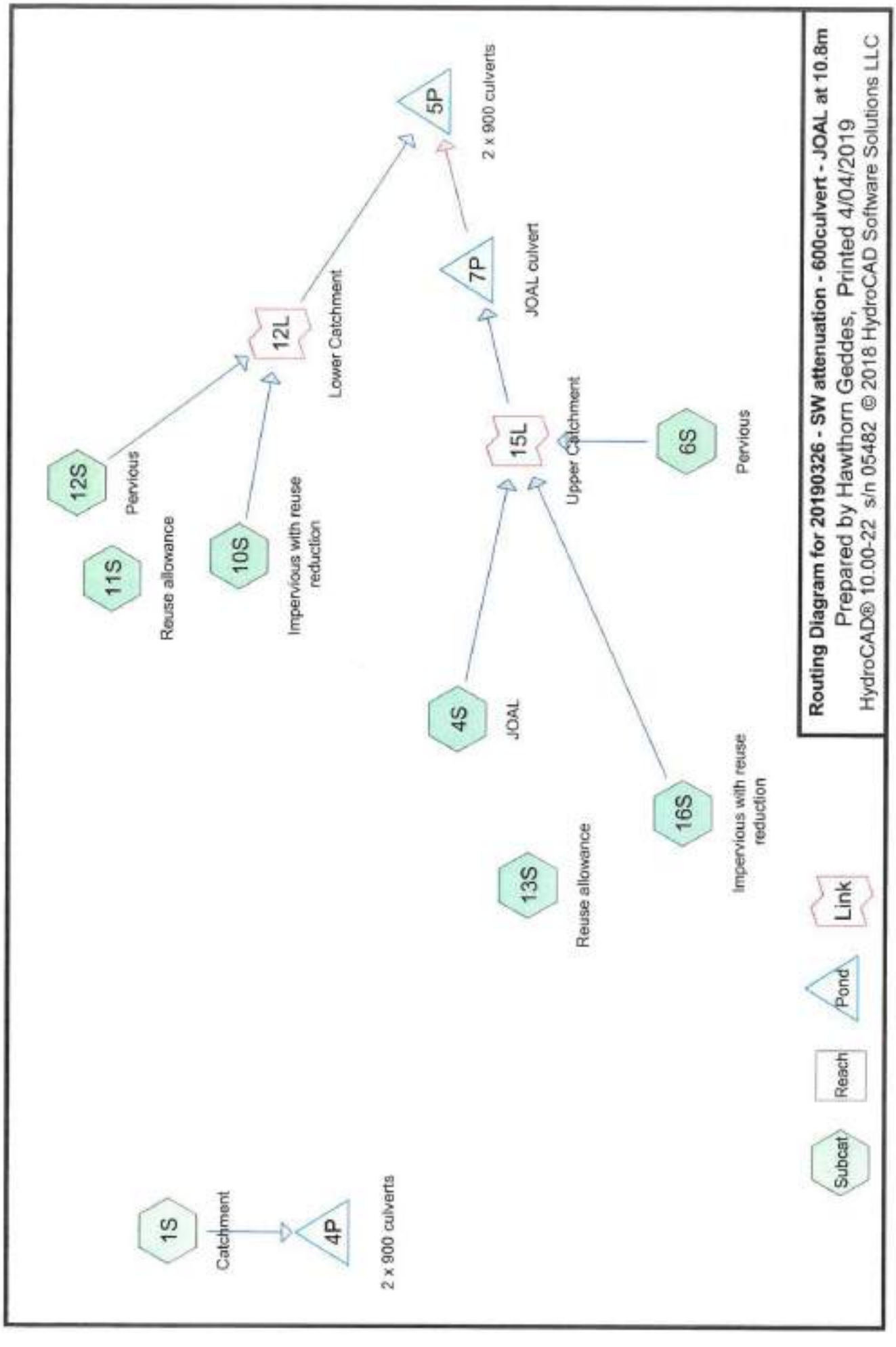

Area Listing (selected nodes)

Area (sq-meters)	C	Description (subcatchment-numbers)
270,000.0	0.67	75% Grass cover, Fair, HSG D (1S)
1,200.0	0.96	Impervious - JOAL (4S)
156,735.0	0.67	Pervious - Northern catchment (12S)
88,995.0	0.67	Pervious - Southern catchment (6S)
23,070.0	0.96	impervious (10S, 11S, 13S, 16S)

KDC - Approved Building Consent Document - BC210441 - Pg 87 of 336 - 30/08/2021 - ComplyNZ

Summary for Pond 4P: 2 x 900 culverts

Inflow Area =	270,000.0 m²,	0.00% Impervious,	Inflow Depth =	20 mm	for 5-year event
Inflow =	3.1801 m³/s @	0.42 hrs, Volume=	5,532.8 m³		
Outflow =	2.5579 m³/s @	0.56 hrs, Volume=	5,532.7 m³,	Atten= 20%,	Lag= 8.7 min
Primary =	2.5579 m³/s @	0.56 hrs, Volume=	5,532.7 m³		
Secondary =	0.0000 m³/s @	0.00 hrs, Volume=	0.0 m³		

Routing by Dyn-Stor-Ind method, Time Span= 0.00-10.00 hrs, dt= 0.01 hrs
Starting Elev= 6.370 m Surf.Area= 0.0 m² Storage= 28.1 m³
Peak Elev= 7.392 m @ 0.56 hrs Surf.Area= 0.0 m² Storage= 1,147.6 m³ (1,119.5 m³ above start)

Plug-Flow detention time= 6.2 min calculated for 5,499.1 m³ (99% of inflow)
Center-of-Mass det. time= 6.0 min (33.0 - 27.0)

Volume	Invert	Avail.Storage	Storage Description
#1	6.000 m	4,716.0 m³	**Custom Stage Data** Listed below

Elevation (meters)	Cum.Store (cubic-meters)
6.000	0.0
6.500	38.0
7.000	364.0
7.500	1,363.0
8.000	2,782.0
8.500	4,716.0

Device	Routing	Invert	Outlet Devices
#1	Primary	6.370 m	**900 mm Round Culvert X 2.00** L= 17.50 m Ke= 0.500 Inlet / Outlet Invert= 6.370 m / 6.140 m S= 0.0131 m/m Cc= 0.900 n= 0.011 Concrete pipe, straight & clean, Flow Area= 0.636 m²
#2	Secondary	8.250 m	**20.00 m long x 8.00 m breadth Broad-Crested Rectangular Weir** Head (meters) 0.061 0.122 0.183 0.244 0.305 0.366 0.427 0.488 Coef. (Metric) 1.48 1.49 1.49 1.46 1.45 1.46 1.46 1.45

Primary OutFlow Max=2.5575 m³/s @ 0.56 hrs HW=7.392 m (Free Discharge)
↑—**1=Culvert** (Inlet Controls 2.5575 m³/s @ 2.01 m/s)

Secondary OutFlow Max=0.0000 m³/s @ 0.00 hrs HW=6.370 m (Free Discharge)
↑—**2=Broad-Crested Rectangular Weir** (Controls 0.0000 m³/s)

KDC - Approved Building Consent Document - BC210441 - Pg 88 of 336 - 30/08/2021 - ComplyNZ

Pond 4P: 2 x 900 culverts

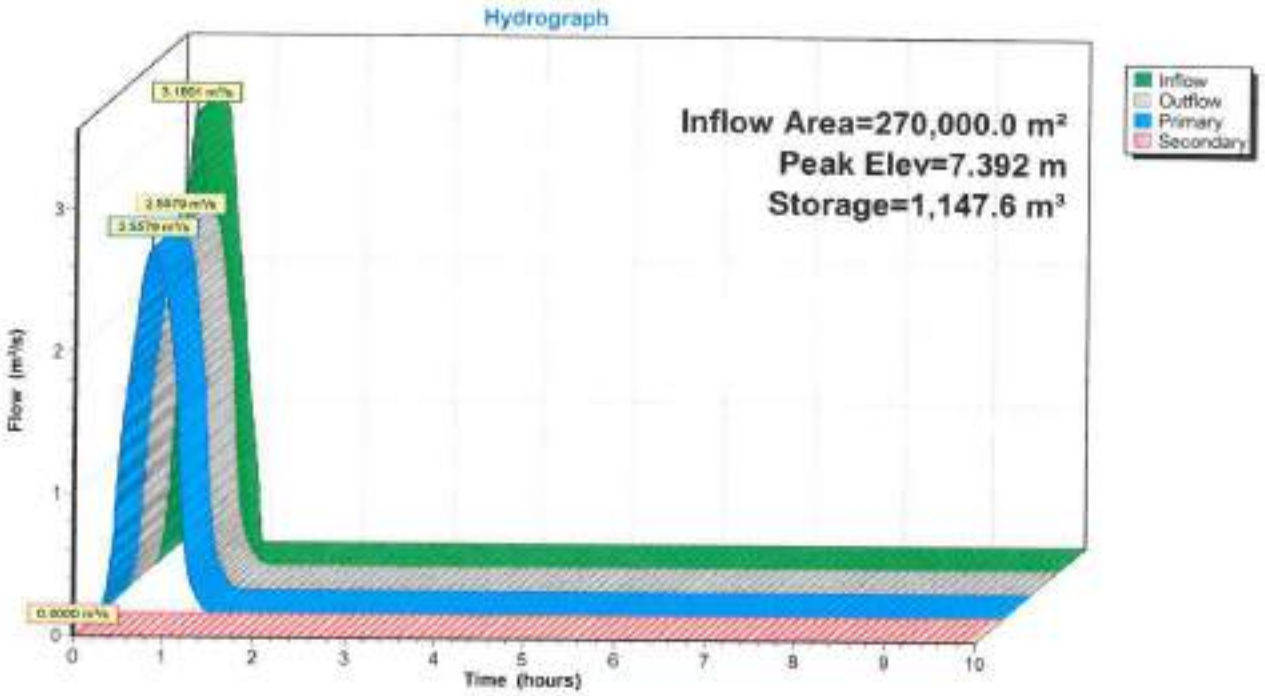

KDC - Approved Building Consent Document - BC210441 - Pg 89 of 336 - 30/08/2021 - ComplyNZ

KDC - Approved Building Consent Document - BC210441 - Pg 90 of 336 - 30/08/2021 - ComplyNZ

Summary for Pond 4P: 2 x 900 culverts

Inflow Area =	270,000.0 m²,	0.00% Impervious,	Inflow Depth =	57 mm	for 100-Year event
Inflow =	6.9778 m³/s @	0.42 hrs, Volume=	15,490.0 m³		
Outflow =	6.3790 m³/s @	0.65 hrs, Volume=	15,489.9 m³,	Atten= 9%,	Lag= 14.0 min
Primary =	4.2781 m³/s @	0.65 hrs, Volume=	14,007.3 m³		
Secondary =	2.1009 m³/s @	0.65 hrs, Volume=	1,482.7 m³		

Routing by Dyn-Stor-Ind method, Time Span= 0.00-10.00 hrs, dt= 0.01 hrs
Starting Elev= 6.370 m Surf.Area= 0.0 m² Storage= 28.1 m³
Peak Elev= 8.421 m @ 0.65 hrs Surf.Area= 0.0 m² Storage= 4,409.1 m³ (4,381.0 m³ above start)

Plug-Flow detention time= 11.7 min calculated for 15,461.8 m³ (100% of inflow)
Center-of-Mass det. time= 11.3 min (42.3 - 31.0)

Volume	Invert	Avail.Storage	Storage Description
#1	6.000 m	4,716.0 m³	**Custom Stage Data** Listed below

Elevation (meters)	Cum.Store (cubic-meters)
6.000	0.0
6.500	38.0
7.000	364.0
7.500	1,363.0
8.000	2,782.0
8.500	4,716.0

Device	Routing	Invert	Outlet Devices
#1	Primary	6.370 m	**900 mm Round Culvert X 2.00** L= 17.50 m Ke= 0.500 Inlet / Outlet Invert= 6.370 m / 6.140 m S= 0.0131 m/m Cc= 0.900 n= 0.011 Concrete pipe, straight & clean, Flow Area= 0.636 m²
#2	Secondary	8.250 m	**20.00 m long x 8.00 m breadth Broad-Crested Rectangular Weir** Head (meters) 0.061 0.122 0.183 0.244 0.305 0.366 0.427 0.488 Coef. (Metric) 1.48 1.49 1.49 1.46 1.45 1.46 1.46 1.45

Primary OutFlow Max=4.2779 m³/s @ 0.65 hrs HW=8.420 m (Free Discharge)
↑—**1=Culvert** (Inlet Controls 4.2779 m³/s @ 3.36 m/s)

Secondary OutFlow Max=2.0978 m³/s @ 0.65 hrs HW=8.420 m (Free Discharge)
↑—**2=Broad-Crested Rectangular Weir** (Weir Controls 2.0978 m³/s @ 0.62 m/s)

Pond 4P: 2 x 900 culverts

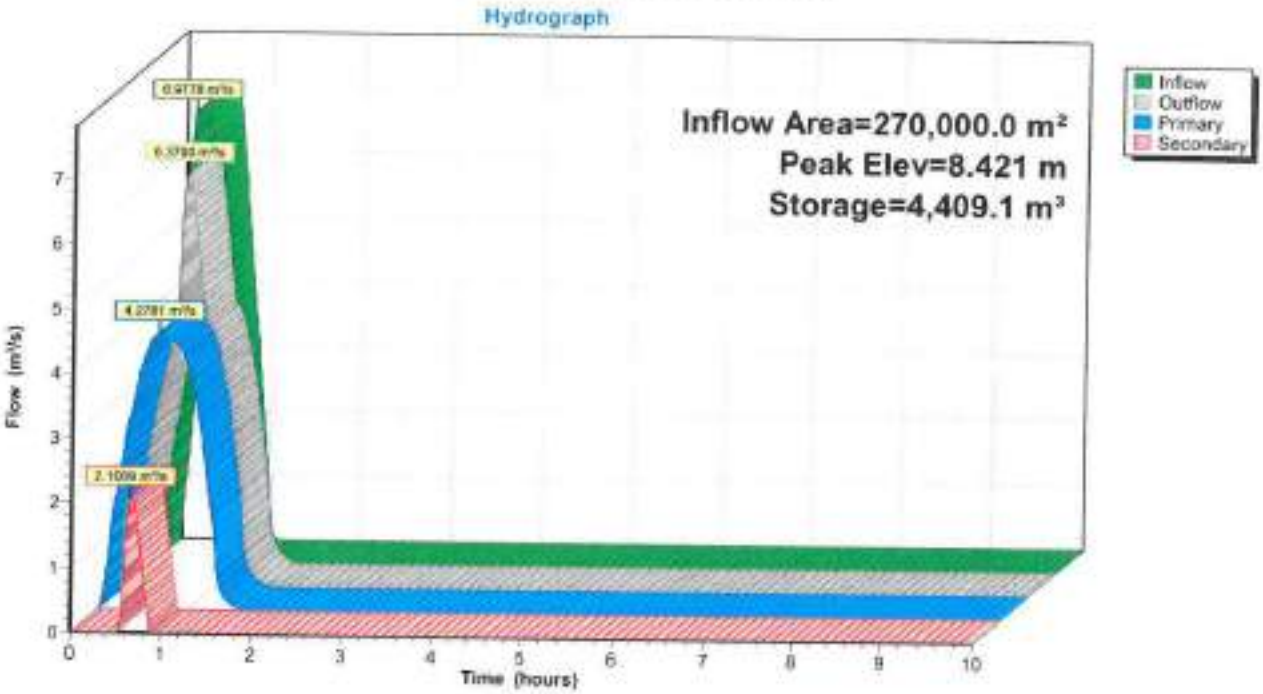

KDC - Approved Building Consent Document - BC210441 - Pg 91 of 336 - 30/08/2021 - ComplyNZ

KDC - Approved Building Consent Document - BC210441 - Pg 92 of 336 - 30/08/2021 - ComplyNZ

Summary for Pond 5P: 2 x 900 culverts

Inflow Area = 268,350.0 m², 8.43% Impervious, Inflow Depth = 23 mm for 5-year event
Inflow = 2.8231 m³/s @ 0.53 hrs, Volume= 6,126.7 m³
Outflow = 2.4276 m³/s @ 0.61 hrs, Volume= 6,126.6 m³, Atten= 14%, Lag= 4.8 min
Primary = 2.4276 m³/s @ 0.61 hrs, Volume= 6,126.6 m³
Secondary = 0.0000 m³/s @ 0.00 hrs, Volume= 0.0 m³

Routing by Dyn-Stor-Ind method, Time Span= 0.00-4.00 hrs, dt= 0.01 hrs
Starting Elev= 6.370 m Surf.Area= 0.0 m² Storage= 28.1 m³
Peak Elev= 7.335 m @ 0.61 hrs Surf.Area= 0.0 m² Storage= 1,034.2 m³ (1,006.0 m³ above start)

Plug-Flow detention time= 6.3 min calculated for 6,088.4 m³ (99% of inflow)
Center-of-Mass det. time= 5.7 min (34.7 - 29.0)

Volume	Invert	Avail.Storage	Storage Description
#1	6.000 m	4,716.0 m³	**Custom Stage Data** Listed below

Elevation (meters)	Cum.Store (cubic-meters)
6.000	0.0
6.500	38.0
7.000	364.0
7.500	1,363.0
8.000	2,782.0
8.500	4,716.0

Device	Routing	Invert	Outlet Devices
#1	Primary	6.370 m	**900 mm Round Culvert X 2.00** L= 17.58 m Ke= 0.500 Inlet / Outlet Invert= 6.370 m / 6.140 m S= 0.0131 m/m Cc= 0.900 n= 0.011 Concrete pipe, straight & clean, Flow Area= 0.636 m²
#2	Secondary	8.250 m	**20.00 m long x 8.00 m breadth Broad-Crested Rectangular Weir** Head (meters) 0.061 0.122 0.183 0.244 0.305 0.366 0.427 0.488 Coef. (Metric) 1.48 1.49 1.49 1.46 1.45 1.46 1.46 1.45

Primary OutFlow Max=2.4273 m³/s @ 0.61 hrs HW=7.335 m (Free Discharge)
└**1=Culvert** (Inlet Controls 2.4273 m³/s @ 1.91 m/s)

Secondary OutFlow Max=0.0000 m³/s @ 0.00 hrs HW=6.500 m (Free Discharge)
└**2=Broad-Crested Rectangular Weir** (Controls 0.0000 m³/s)

Pond 5P: 2 x 900 culverts

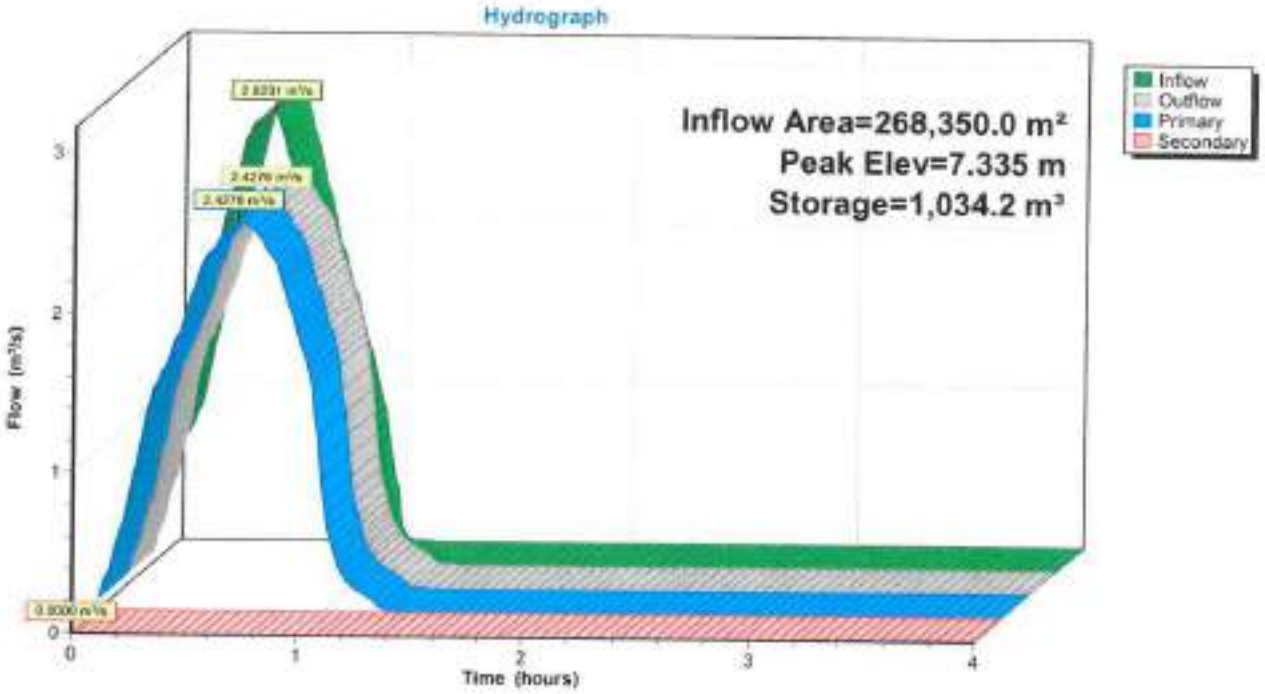

KDC - Approved Building Consent Document - BC210441 - Pg 93 of 336 - 30/08/2021 - ComplyNZ

KDC - Approved Building Consent Document - BC210441 - Pg 94 of 336 - 30/08/2021 - ComplyNZ

Summary for Pond 5P: 2 x 900 culverts

Inflow Area = 268,350.0 m², 8.43% Impervious, Inflow Depth = 60 mm for 100-Year event
Inflow = 6.8747 m³/s @ 0.65 hrs, Volume= 16,223.3 m³
Outflow = 6.2858 m³/s @ 0.68 hrs, Volume= 16,223.2 m³, Atten= 9%, Lag= 2.1 min
Primary = 4.2718 m³/s @ 0.68 hrs, Volume= 14,894.7 m³
Secondary = 2.0140 m³/s @ 0.68 hrs, Volume= 1,328.5 m³

Routing by Dyn-Stor-Ind method, Time Span= 0.00-4.00 hrs, dt= 0.01 hrs
Starting Elev= 6.370 m Surf.Area= 0.0 m² Storage= 28.1 m³
Peak Elev= 8.416 m @ 0.68 hrs Surf.Area= 0.0 m² Storage= 4,390.8 m³ (4,362.7 m³ above start)

Plug-Flow detention time= 11.6 min calculated for 16,185.0 m³ (100% of inflow)
Center-of-Mass det. time= 11.2 min (44.5 - 33.3)

Volume	Invert	Avail.Storage	Storage Description
#1	6.000 m	4,716.0 m³	**Custom Stage Data** Listed below

Elevation (meters)	Cum.Store (cubic-meters)
6.000	0.0
6.500	38.0
7.000	364.0
7.500	1,363.0
8.000	2,782.0
8.500	4,716.0

Device	Routing	Invert	Outlet Devices
#1	Primary	6.370 m	**900 mm Round Culvert X 2.00** L= 17.58 m Ke= 0.500 Inlet / Outlet Invert= 6.370 m / 6.140 m S= 0.0131 m/m Cc= 0.900 n= 0.011 Concrete pipe, straight & clean, Flow Area= 0.636 m²
#2	Secondary	8.250 m	**20.00 m long x 8.00 m breadth Broad-Crested Rectangular Weir** Head (meters) 0.061 0.122 0.183 0.244 0.305 0.366 0.427 0.488 Coef. (Metric) 1.48 1.49 1.49 1.46 1.45 1.46 1.46 1.45

Primary OutFlow Max=4.2715 m³/s @ 0.68 hrs HW=8.416 m (Free Discharge)
↑—**1=Culvert** (Inlet Controls 4.2715 m³/s @ 3.36 m/s)

Secondary OutFlow Max=2.0098 m³/s @ 0.68 hrs HW=8.416 m (Free Discharge)
↑—**2=Broad-Crested Rectangular Weir** (Weir Controls 2.0098 m³/s @ 0.61 m/s)

Pond 5P: 2 x 900 culverts

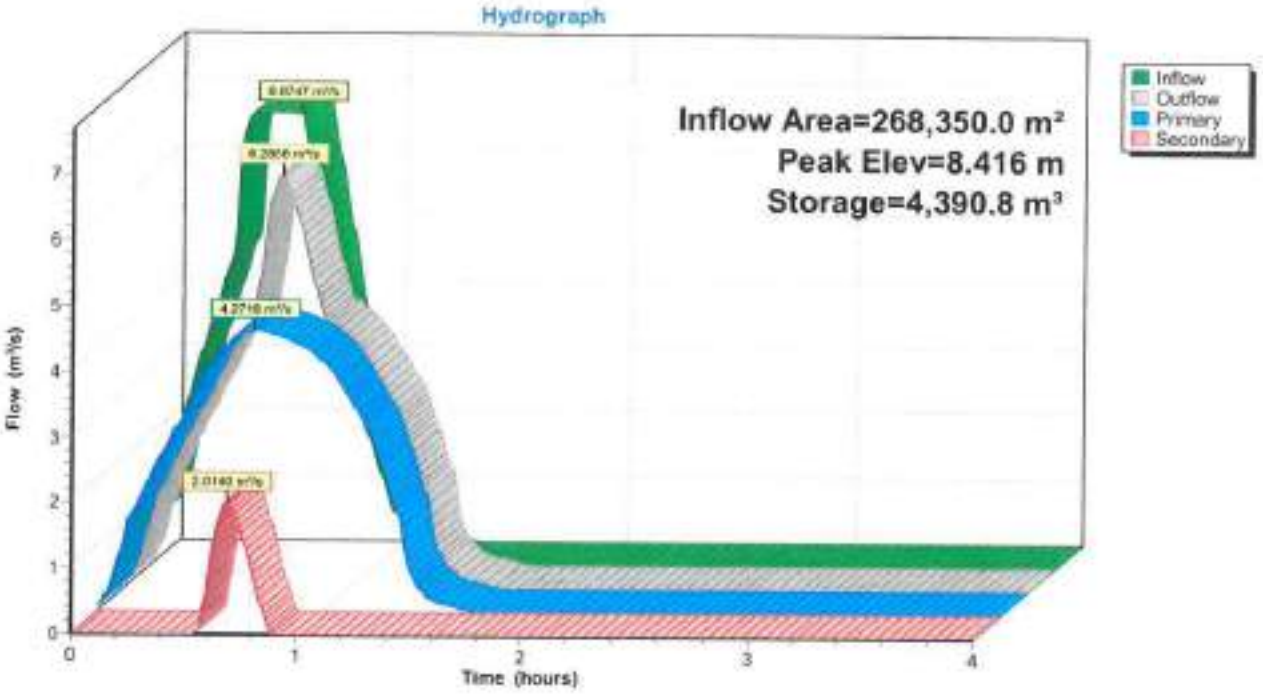

KDC - Approved Building Consent Document - BC210441 - Pg 95 of 336 - 30/08/2021 - ComplyNZ

KDC - Approved Building Consent Document - BC210441 - Pg 96 of 336 - 30/08/2021 - ComplyNZ

Summary for Pond 7P: JOAL culvert

Inflow Area = 95,475.0 m², 6.79% Impervious, Inflow Depth = 48 mm for 100-Year event
Inflow = 3.0068 m³/s @ 0.42 hrs, Volume= 4,543.4 m³
Outflow = 2.9786 m³/s @ 0.42 hrs, Volume= 4,679.9 m³, Atten= 1%, Lag= 0.4 min
Primary = 0.9579 m³/s @ 0.42 hrs, Volume= 3,018.1 m³
Secondary = 2.0207 m³/s @ 0.42 hrs, Volume= 1,661.7 m³

Routing by Dyn-Stor-Ind method, Time Span= 0.00-4.00 hrs, dt= 0.01 hrs
Starting Elev= 10.000 m Surf.Area= 0.0 m² Storage= 125.0 m³
Peak Elev= 10.905 m @ 0.42 hrs Surf.Area= 0.0 m² Storage= 785.0 m³ (660.0 m³ above start)

Plug-Flow detention time= 6.4 min calculated for 4,532.2 m³ (100% of inflow)
Center-of-Mass det. time= 5.7 min (30.1 - 24.4)

Volume	Invert	Avail.Storage	Storage Description
#1	9.000 m	870.0 m³	**Custom Stage Data** Listed below

Elevation (meters)	Cum.Store (cubic-meters)
9.000	0.0
9.500	26.0
10.000	125.0
10.500	423.0
11.000	870.0

Device	Routing	Invert	Outlet Devices
#1	Primary	8.980 m	**600 mm Round Culvert** L= 25.00 m Ke= 0.500 Inlet / Outlet Invert= 8.980 m / 8.000 m S= 0.0392 m/m Cc= 0.900 n= 0.011 Concrete pipe, straight & clean, Flow Area= 0.283 m²
#2	Secondary	10.800 m	**40.00 m long x 5.00 m breadth Broad-Crested Rectangular Weir** Head (meters) 0.061 0.122 0.183 0.244 0.305 0.366 0.427 0.488 Coef. (Metric) 1.48 1.49 1.49 1.46 1.45 1.46 1.46 1.45

Primary OutFlow Max=0.9578 m³/s @ 0.42 hrs HW=10.905 m TW=8.107 m (Dynamic Tailwater)
↑**1=Culvert** (Inlet Controls 0.9578 m³/s @ 3.39 m/s)

Secondary OutFlow Max=2.0144 m³/s @ 0.42 hrs HW=10.905 m TW=8.106 m (Dynamic Tailwater)
↑**2=Broad-Crested Rectangular Weir** (Weir Controls 2.0144 m³/s @ 0.48 m/s)

Pond 7P: JOAL culvert

Hydrograph

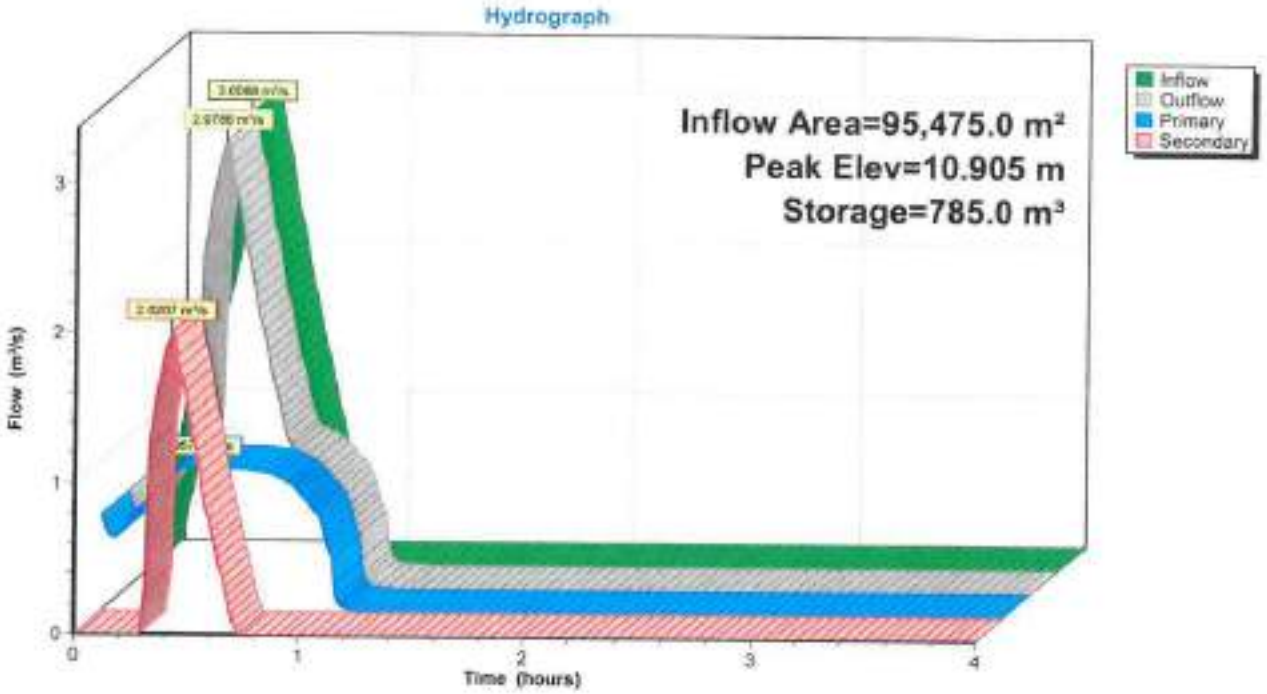

KDC - Approved Building Consent Document - BC210441 - Pg 97 of 336 - 30/08/2021 - ComplyNZ

KDC - Approved Building Consent Document - BC210441 - Pg 98 of 336 - 30/08/2021 - ComplyNZ

TP108 peak flow calculations for filter strips assuming a small catchment

Table 3.3 - Curve numbers for typical Auckland conditions			
Land use	Group A Soil (volcanic granular loam)	Group B Soil (alluvial)	Group C Soil (mudstone/sandstone)
Bush, humid climate, not grazed	30	55	70
Pasture, lightly grazed good grass cover	39	61	74
Urban lawns	39	61	74
Crops, straight rows, minimal vegetative cover	72	81	88
Sealed roads, roofs	98	98	98

Project:	Duck Trust
Address:	
Consultant:	Hawthorn Geddes
Date:	30.11.18

Data Entry Cells	
Result cells	
Drop Down Menu	

Impervious area	ha	0.12
Pervious area	ha	0
Total area	ha	0.12
Impervious SCS curve number		98
Hydrological soil group		Group C
Pervious SCS curve number		98
2 yr 24-hour rainfall depth from TP108 Apdx A	mm	114.7
Reticulation design rainfall depth (e.g. 5yr, 10yr) from TP108 Apdx A	mm	0
Water Quality Storm (WQS) rainfall depth (2yr/3)	mm	38.23
WQS peak rainfall rate from TP108 (10-minute duration)	mm/hr	25.8
Reticulation design rainfall depth (e.g. 5yr, 10yr)		0.0

Impervious surfaces

Storage S	mm	5.2
Runoff/Rainfall at peak of rainfall		0.95
Peak runoff rate (WQS)	m^3/s	0.0082

Pervious surfaces

Storage S	mm	5.2
Runoff/Rainfall at peak of rainfall		0.93
Peak runoff rate (WQS)	m^3/s	0.0000

Combined flow for Water Quality Storm

Peak runoff from surfaces	m^3/s	0.0082
Peak outflow from catchment (allowing for lag)	m^3/s	0.0073

TP10 Filter strip (50mm grass)

Data entry cells
Result cells

Project:	Duck Trust	
Address:	0	
Consultant:	Hawthorn Geddes	
Date:	30.11.18	

Vary depth until "ok"

Flow rate Q	m^3/s	0.00731
Channel slope S		8.6%
Depth of flow d	m	0.05
Manning's n for 50mm grass		0.142
Hydraulic radius R	m	0.043
Base width	m	0.60
Cross-sectional area A=bd	m^2	0.030
V=R^.667*S^.5/n	m/s	0.252
Hydraulic radius R=A/(b+2*d)	m	0.043
Is velocity V < 0.4m/s ?		**OK**

ok

To meet TP10 stormwater treatment specification:		
Required filter strip length	m	136.19
Filter strip length provided	m	150.00
Travel time t (should be >9 mins)	minutes	9.91

OK

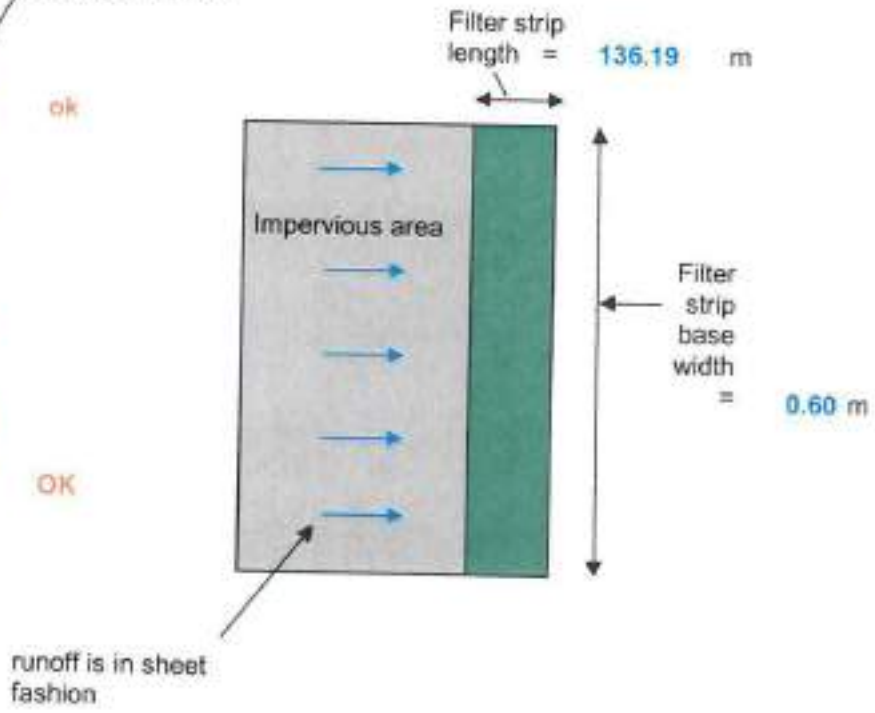

KDC - Approved Building Consent Document - BC210441 - Pg 100 of 336 - 30/08/2021 - ComplyNZ

BUILDING COMPLIANCE
DELIVERING CONSISTENT COLLABORATIVE COMPLIANCE THROUGHOUT NEW ZEALAND

Date: 21st April 2021

The Building Department Kaipara District Council

Dear Sir/Madam,

Re: Construction of New Dwelling at Lot 81, Robert Hastie Drive, Mangawhai

Please direct all correspondence for the lodgement and management of the Building Consent in relation to the construction of our dwelling, to our agent below:

C3 Building Compliance Lisa@c3bc.co.nz & daniel@c3bc.co.nz

Yours faithfully

Lance Vale
12 William Gilbert Place, Mangawhai

Director / Project Manager

ACDL TRUSTEE LTD
Linda and David Kendal
17 Pinefield Road, Whenuapai

Property Owner

If you are signing this application on behalf of a company/trust/other entity (the applicant), you are declaring that you are duly authorised to sign on behalf of the applicant to make such an application.

PLEASE NOTE: C3 Building Compliance does not meet the definition of Designer Or Building as defined in sections 14d & 14e of the Building Act 2004.

KDC - Approved Building Consent Document - BC210441 - Pg 101 of 336 - 30/08/2021 - ComplyNZ

Form 2A

Memorandum from licensed building practitioner: Certificate of design work

Section 30C or 45, Building Act 2004

Please fill in the form as fully and correctly as possible.
If there is insufficient room on the form for requested details, please continue on another sheet and attach the additional sheet(s) to this form.

THE BUILDING

Street address: Lot 81 Robert Hastie Drive	
Suburb: The Sanctuary	
Town/City: Mangawhai	Postcode: 0573

THE OWNER(S)

Name(s): Dave & Linda Kendall	
Mailing address: 17 Pinefield Road	
Suburb:	PO Box/Private Bag:
Town/City: Whenupai	Postcode:
Phone number: 0220 546 323	Email address: linda.kendall@xtra.co.nz

KDC - Approved Building Consent Document - BC210441 - Pg 102 of 336 - 30/08/2021 - ComplyNZ

BASIS FOR PROVIDING THIS MEMORANDUM

I am providing this memorandum in my role as the: Please tick the option that applies ✓

✔	**sole** designer of all of the RBW design outlined in this memorandum – I carried out all of the RBW design work myself – no other person will be providing any additional memoranda for the project
○	**lead** designer who carried out some of the RBW design myself but also supervised other designers – this memorandum covers their RBW design work as well as mine, and **no other** person will be providing any additional memoranda for the project
○	**lead** designer for all but specific elements of RBW – this memorandum only covers the RBW design work that I carried out or supervised and the **other** designers will provide their own memorandum relating to their specific RBW design
○	**specialist** designer who carried out specific elements of RBW design work as outlined in this memorandum – other designers will be providing a memorandum covering the remaining RBW design work

IDENTIFICATION OF DESIGN WORK THAT IS RESTRICTED BUILDING WORK (RBW)

I Marc Vale carried out / supervised the following design work that is restricted building work

PRIMARY STRUCTURE: B1

Design work that is RBW	Description of RBW	Carried out or supervised	Reference to plans and specifications
Tick ✓ if included. Cross ✗ if excluded	If appropriate, provide details of the RBW	Tick ✓ whether you carried out this design work or supervised someone else carrying out this design work	If appropriate, specify references
All RBW design work relating to B1 ○		○ Carried out ○ Supervised	
Foundations and subfloor framing ✔	Firth Ribraft to Codemark	✔ Carried out ○ Supervised	401-403, 501, 701-703

KDC - Approved Building Consent Document - BC210441 - Pg 103 of 336 - 30/08/2021 - ComplyNZ

Design work that is RBW	Description of RBW	Carried out or supervised	Reference to plans and specifications
Tick ✓ if included. Cross ✗ if excluded	If appropriate, provide details of the RBW	Tick ✓ whether you carried out this design work or supervised someone else carrying out this design work	If appropriate, specify references
Walls ✓	Timber framed walls to NZS3604:2011	✓ Carried out ○ Supervised	201, 401-403, 502, 701-709
Roof ✓	Pre-fabricated roof trusses	✓ Carried out ✓ Supervised	Truss PS1 & Layout, 401-403, 504, 706-709
Columns and beams ✓	Lintels designed to NZS3604:2011 and with designIT software	✓ Carried out ○ Supervised	504, 708-709, designIT calculations
Bracing ✓	GIB & Ecoply Bracing	✓ Carried out ○ Supervised	503, 710, 803
Other ○		○ Carried out ○ Supervised	

KDC - Approved Building Consent Document - BC210441 - Pg 104 of 336 - 30/08/2021 - ComplyNZ

Design work that is RBW	Description of RBW	Carried out or supervised	Reference to plans and specifications
Tick ✓ if included. Cross ✗ if excluded	If appropriate, provide details of the RBW	Tick ✓ whether you carried out this design work or supervised someone else carrying out this design work	If appropriate, specify references
EXTERNAL MOISTURE MANAGEMENT SYSTEMS: E2			
All RBW design work relating to E2 ○		○ Carried out ○ Supervised	
Damp proofing ✓	DPM to u/s of concrete foundation	✓ Carried out ○ Supervised	401-403, 501, 701-703
Roof cladding or roof cladding system ✓	Gerard Metal Tile roofing	✓ Carried out ○ Supervised	301-302, 401-403, 505, 706-707
Ventilation system (for example, subfloor or cavity) ✓	EZpanel over cavity	✓ Carried out ○ Supervised	301-302, 401-403, 701-707
Wall cladding or wall cladding system ✓	EZpanel over cavity	✓ Carried out ○ Supervised	301-302, 401-403, 701-707
Waterproofing ○		○ Carried out ○ Supervised	
Other ○		○ Carried out ○ Supervised	

KDC - Approved Building Consent Document - BC210441 - Pg 105 of 336 - 30/08/2021 - ComplyNZ

Design work that is RBW	Description of RBW	Carried out or supervised	Reference to plans and specifications
Tick ✓ if included. Cross ✗ if excluded	If appropriate, provide details of the RBW	Tick ✓ whether you carried out this design work or supervised someone else carrying out this design work	If appropriate, specify references
FIRE SAFETY SYSTEMS: C1 - C6			
Emergency warning systems Evacuation and fire service operation systems ◯ Suppression or control systems Other		◯ Carried out ◯ Supervised	

Note: The design of fire safety systems is only restricted building work when it involves small-to-medium apartment buildings as defined by the Building (Definition of Restricted Building Work) Order 2011.

WAIVERS AND MODIFICATIONS

Waivers or modifications of the Building Code are required. ◯ Yes ✓ No

If Yes, provide details of the waivers or modifications below:

Clause	Waiver/modification required
List relevant clause numbers of building code	Specify nature of waiver or modification of building code required

KDC - Approved Building Consent Document - BC210441 - Pg 106 of 336 - 30/08/2021 - ComplyNZ

ISSUED BY

Name and contact details of the licensed building practitioner who is licensed to carry out or supervise design work that is restricted building work.

Name: Marc Vale	LBP or Registration number: BP134199
The practitioner is a: ✔ Design LBP ◯ Registered architect ◯ Chartered professional engineer	
Design Entity or Company (optional): Cadetailer Ltd.	
Mailing address (if different from below):	
Street address/Registered office: 10 Danny Place	
Suburb: Pyes Pa	Town/City: Tauranga
PO Box/Private Bag:	Postcode: 3112
Phone number:	Mobile: 021471119
After hours:	Fax:
Email address: marc@cadetailer.co.nz	Website:

DECLARATION

I Marc Vale LBP, state that I have applied the skill and care reasonably required of a competent design professional in carrying out or supervising the Restricted Building Work (RBW) described in this form, and that based on this, I also state that the RBW:

- Complies with the building code, or
- Complies with the building code subject to any waiver or modification of the building code recorded on this form

Signature: 

Date: 22/06/2021

MiTek New Zealand Limited

Correspondence from : **AUCKLAND**
40 Neales Road, East Tamaki 2013
PO Box 58-014, Botany 2163
Phone: 09 274 7109
Fax: 09 274 7100

CHRISTCHURCH
14 Pilkington Way, Wigram 8042
PO Box 8387, Riccarton 8440
Phone: 03 348 8691
Fax: 03 348 0314

www.miteknz.co.nz

MiTek 20/20 Engineering 4.7.301.0

Printed: 15:30:04 23 May 2021

PRODUCER STATEMENT for MiTek 20/20® TRUSS DESIGN - Version 4.7

ISSUED BY: **MiTek New Zealand Limited**

TO: **ITM Warkworth**

IN RESPECT OF: **MiTek® Truss Designs**

This producer statement covers the MiTek 20/20® truss design and the structural performance of the GANG-NAIL® connector plate for the job reference **31122** and may be used by a Building Consent Authority to assist in determining compliance with the New Zealand Building Code.

The MiTek 20/20® truss design program has been developed by MiTek New Zealand Limited for the design of MiTek® timber roof, floor and attic trusses in New Zealand. The truss designs computed by MiTek 20/20 ® are prepared using sound and widely accepted engineering principles, and in accordance with compliance documents of the New Zealand Building Code and Verification Method B1/VM1; and internationally accepted standard ANSI/TPI 1 - 2002 as an alternative solution, to satisfy the requirements of Clause B1 of the New Zealand Building Code.

On behalf of MiTek New Zealand Limited, and subject to:

i) All proprietary products meeting their performance specification requirements
ii) The provision of adequate roof bracing and overall building stability
iii) Correct selection and placement of GANG-NAIL connector plates
iv) Correct input of Truss Design Data as shown in the Fabricator Design Statement for this job
v) The design being undertaken by the accredited fabricator under the terms of the software licence
vi) Timber is graded to the requirements of NZS 3603:1993
vii) Minimum timber treatment for these MiTek® trusses shall be in accordance with B2/AS1 Table 1A and the relevant sections of NZS 3602:2003

I believe on reasonable grounds that the trusses, if constructed in accordance with the MiTek 20/20® truss design and shop drawings, will comply with the relevant provisions of the New Zealand Building Code.

MiTek New Zealand Limited holds a current policy of Professional Indemnity Insurance no less than $500,000.

On behalf of MiTek New Zealand Limited, **Date: Sunday, 23 May 2021**



In Ling Ng, BE (Hons), CPEng, IntPE, MIPENZ (ID: 146585)
TECHNICAL SERVICES MANAGER, MiTek New Zealand Limited

KDC - Approved Building Consent Document - BC210441 - Page 67 of 336 - 30/08/2021 - CoMplyNZ

Job: 31122 Client: Coastal Homes Site: Kendall
Phone: Lot 81 The Sanctuary
Description: Mangawhai
Building Consent No.: DP 556753 Phone:

MITEK FABRICATOR DESIGN STATEMENT

This statement is issued by MiTek accredited fabricator **ITM Warkworth**, being licensed to use the MiTek 20/20® software, to the client listed above and may be used by the Building Consent Authority to assist in determining compliance with the New Zealand Building Code.

KDC - Approved Building Consent Document - BC210441 - Pg 108 of 336 - 30/08/2021 Certified

MiTek® TRUSS DESIGN DATA

The MiTek 20/20® computer design for this job is based on the following design parameters entered into the program. The Fabricator shall ensure that these job details are current and relevant to the project for the design of the MiTek ® trusses.

Job Details

Importance Level : 2

Design Working Life : 50 years

Roof Truss

Timber Group:	MSG8H1.2	Pitch:	25.000 deg	Nominal Overhang:	600 mm
Roof		**Ceiling**		**Wind**	
Material:	Metal Tiles	Material:	Rondo on clips	Area:	High (44.0 m/s)
Dead Load:	0.210 kPa	Dead Load:	0.200 kPa	Pressure Coeff:	Cpe = varies; Cpi = -0.30, 0.20
Restraints:	400 mm centres	Restraints:	1800 mm centres		
Live Load:	Qur = 0.250 kPa	Live Load:	Qc = 1.400 kN		
	Qc = 1.100 kN				

The minimum timber treatment for these MiTek® trusses shall be in accordance with B2/AS1 Table 1A and the relevant sections of NZS 3602:2003. The timber for these MiTek® trusses shall be graded to the requirements of NZS 3603:1993. Proprietary fixings and timber connectors shall be selected in accordance with NZS3604:2011 Section 4 - Durability.

MiTek® Truss List

Legend: * = detail only, ? = input only, ~~Txx~~ = failed design, Ø = non certified, Unmarked trusses = designed successfully, LB = lateral bracing required
GB = gable brace required

Truss	Qty	Span (mm)	Pitch (deg)	Spacing (mm)	Truss	Qty	Span (mm)	Pitch (deg)	Spacing (mm)	Truss	Qty	Span (mm)	Pitch (deg)	Spacing (mm)
ETG2	2	7365	25.000	900	J02B	1	2077	25.000	900	J07A	1	2038	25.000	900
PTG01	1	4045	0.000	900	J02C	1	2077	25.000	900	T04	3	6255	25.000	897
T01	1	6255	25.000	900	J03	1	2938	25.000	900	T04A	2	6255	25.000	897
T01A	1	6000	25.000	900	J03A	2	2938	25.000	900	T05	3	4235	25.000	900
T02	4	7365	25.000	900	J03B	1	3193	25.000	900	T07	1	6500	25.000	645
T02A	2	7365	25.000	900	J03C	1	3193	25.000	900	T12	1	7717	25.000	858
T03	1	7365	25.000	900	J03D	1	2938	25.000	900	TR01	1	4810	25.000	900
T06	1	6500	25.000	900	J03E	1	2938	25.000	900	V01	1	2662	17.500	900
T06A	1D	6500	25.000	900	J03F	1	2938	25.000	900	V02	1	5324	17.500	900
T08	1	6790	25.000	900	J03G	1	2938	25.000	900	V03	1	7060	17.500	900
T09	2	6790	25.000	900	J03H	2	2938	25.000	900	V04	1	1360	25.000	900
T10	1	9807	25.000	900	J04	1	3227	25.000	900	V05	1	1463	25.000	900
T11	5	9807	25.000	858	J04A	1	3227	25.000	900	V06	1	1800	25.000	900
T11A	8	9807	25.000	858	J04B	1	3227	25.000	900	V07	1	3600	25.000	900
T14	1	6265	25.000	897	J05	1	2327	25.000	900	V08	1	5400	25.000	900
T16	1	6265	25.000	897	J05A	1	2327	25.000	900	V09	1	7200	25.000	900
TR02	1	6790	25.000	900	J05B	1	2327	25.000	900	V10	1	971	25.000	900
ETG1	1D	9680	17.500	900	J05C	1	2327	25.000	900	V11	1	1871	25.000	900
J01	1	2977	25.000	900	J06	1	1427	25.000	900	V12	1	1138	25.000	900
J01A	1	2977	25.000	900	J06A	1	1427	25.000	900	V13	1	1961	25.000	900
J01B	1	2977	25.000	900	J06B	1	1427	25.000	900	V14	1	2460	25.000	900
J02	1	2077	25.000	900	J06C	1	1427	25.000	900	V15	1	1489	25.000	900
J02A	1	2077	25.000	900	J07	1	2038	25.000	900					

Total quantity : 92

The computer design input has been carried out by:

Signed: .....

Date: ...Sunday, 23 May 2021....

Name of Detailer: .....Mike Ayers.....

Qualifications and Title: Designer (Mitek C.O.C. 10470)

On behalf of: ITM Warkworth

Job: 31122
Client: Coastal Homes
Phone:
Site: Kendall
Lot 81 The Sanctuary
Mangawhai
DP 556753
Description:
Building Consent No.:
Phone:

TRUSS FIXING SELECTION REPORT - Characteristic Loads

Fixings are selected from the LUMBERLOK Brochure 08/2014 (Timber Connectors Characteristic Loadings Data)

MiTek® Truss List
Legend: * = detail only, ? = input only, ~~Txx~~ = failed design, Ø = non certified, Unmarked trusses = designed successfully

KDC - Approved Building Consent Document - BC210441 - Pg 109 of 336 - 30/08/2021 - ComplyNZ

Truss	Qty	Span (mm)	Joint	Down (kN)	Uplift (kN)	Bearing	Fixing Qty	Fixing Selected
ETC2	2	7365	A	4.028	3.682	Cross	2	CT200 pair
			E	4.028	3.682	Cross	2	CT200 pair
PTC01	1	4045	E	4.879	6.270	Cross	1	CT200 pair
			H	4.235	5.360	Butt	1	JH 47x120
T01	1	6255	A	5.628	5.979	Cross	1	CT200 pair
			E	6.198	6.283	Cross	1	CT200 pair
T01A	1	6000	F	12.866	8.401	Cross	1	CT200 pair
			G	8.484	6.481	Cross	1	CT200 pair
T02	4	7365	B	4.377	3.739	Cross	4	CT200 pair
			F	4.377	3.739	Cross	4	CT200 pair
T02A	2	7365	A	4.020	3.676	Cross	2	CT200 pair
			E	4.391	3.742	Cross	2	CT200 pair
T03	1	7365	A	4.939	5.170	Cross	1	CT200 pair
			G	5.392	4.781	Cross	1	CT200 pair
T06	1	6500	A	6.374	6.836	Cross	1	CT200 pair
			E	6.739	6.902	Cross	1	CT200 pair
T06A	1D	6500	A	14.528	14.938	Cross	1	16kN Truss to Top Plate
			E	11.122	11.609	Cross	1	16kN Truss to Top Plate
T08	1	6790	H	8.956	11.159	Butt	1	JH 47x190
			C	7.073	7.442	Cross	1	CT200 pair
T09	2	6790	H	3.698	3.558	Butt	2	JH 47x90
			F	4.079	3.287	Cross	2	CT200 pair
T10	1	9807	I	3.041	3.465	Cross	1	CT200 pair
			K	7.654	3.006	Cross	1	Pair of Wire Dog Staples
T11	5	9807	M	7.623	2.883	Cross	5	Pair of Wire Dog Staples
			J	3.156	3.335	Cross	5	CT200 pair
T11A	8	9807	J	2.942	3.288	Cross	8	CT200 pair
			L	7.590	2.912	Cross	8	Pair of Wire Dog Staples
T14	1	6265	A	7.768	5.773	Butt	1	JH 47x120
			G	3.421	3.120	Cross	1	Pair of Wire Dog Staples
T16	1	6265	A	7.253	5.373	Butt	1	JH 47x120
			G	3.779	3.182	Cross	1	Pair of Wire Dog Staples
TRC2	1	6790	H	3.698	3.558	Butt	1	JH 47x90
			E	4.078	3.288	Cross	1	CT200 pair
ETC1	1D	9680	H	0.890	0.937	Cross	1	Pair of Wire Dog Staples
			O	0.851	0.882	Cross	1	Pair of Wire Dog Staples
			J	4.953	2.662	Cross	1	Pair of Wire Dog Staples
			M	4.375	2.265	Cross	1	Pair of Wire Dog Staples
J01	1	2977	F	2.946	2.048	Cross	1	Pair of Wire Dog Staples
			H	1.996	2.263	Butt	1	JH 47x90
J01A	1	2977	F	2.942	2.046	Cross	1	Pair of Wire Dog Staples
			H	1.977	2.259	Butt	1	JH 47x90
J01B	1	2977	F	2.663	1.094	Cross	1	Pair of Wire Dog Staples
			H	1.572	1.222	Butt	1	JH 47x90
			E	0.475	0.717	Cross	1	Pair of Wire Dog Staples
J02	1	2077	F	2.469	0.882	Cross	1	Pair of Wire Dog Staples
			H	1.161	0.815	Butt	1	JH 47x90
J02A	1	2077	F	2.468	0.758	Cross	1	Pair of Wire Dog Staples
			H	1.371	0.879	Butt	1	JH 47x90
			E	0.332	0.465	Cross	1	Pair of Wire Dog Staples
J02B	1	2077	F	2.469	0.882	Cross	1	Pair of Wire Dog Staples
			H	1.161	0.815	Butt	1	JH 47x90
J02C	1	2077	F	2.275	0.737	Cross	1	Pair of Wire Dog Staples
			H	1.391	0.888	Butt	1	JH 47x90
			E	0.316	0.462	Cross	1	Pair of Wire Dog Staples
J03	1	2938	F	2.654	1.080	Cross	1	Pair of Wire Dog Staples
			H	1.562	1.206	Butt	1	JH 47x90
			E	0.470	0.708	Cross	1	Pair of Wire Dog Staples
J03A	2	2938	G	2.622	0.775	Cross	2	Pair of Wire Dog Staples
			I	1.411	1.150	Butt	2	JH 47x90
			F	0.302	0.361	Cross	2	Pair of Wire Dog Staples
			E	1.047	1.571	Cross	2	Pair of Wire Dog Staples
J03B	1	3193	G	1.025	0.966	Butt	1	JH 47x90
			D	0.458	0.746	Cross	1	Pair of Wire Dog Staples
			E	2.729	0.204	Cross	1	Pair of Wire Dog Staples
J03C	1	3193	G	0.981	1.133	Butt	1	JH 47x90
			D	0.289	0.344	Cross	1	Pair of Wire Dog Staples
			C	0.899	1.475	Cross	1	Pair of Wire Dog Staples
			E	2.663	0.000	Cross	1	Pair of Wire Dog Staples
J03D	1	2938	G	2.613	0.965	Cross	1	Pair of Wire Dog Staples
			I	1.414	1.118	Butt	1	JH 47x90
			F	1.082	1.844	Cross	1	Pair of Wire Dog Staples
			E	2.127	2.152	Cross	1	Pair of Wire Dog Staples
J03E	1	2938	F	2.654	1.080	Cross	1	Pair of Wire Dog Staples
			H	1.562	1.206	Butt	1	JH 47x90
			E	0.470	0.708	Cross	1	Pair of Wire Dog Staples

Job: 31122
Client: Coastal Homes
Phone:
Site: Kendall
Lot 81 The Sanctuary
Mangawhai
DP 556753
Phone:
Description:
Building Consent No.:

Truss	Qty	Span (mm)	Joint	Down (kN)	Uplift (kN)	Bearing	Fixing Qty	Fixing Selected
J03F	1	2938	G	2.622	0.775	Cross	1	Pair of Wire Dog Staples
			I	1.411	1.150	Butt	1	JH 47x90
			F	0.302	0.361	Cross	1	Pair of Wire Dog Staples
			E	1.047	1.571	Cross	1	Pair of Wire Dog Staples
J03G	1	2938	F	2.926	2.019	Cross	1	Pair of Wire Dog Staples
			H	1.924	2.198	Butt	1	JH 47x90
J03H	2	2938	H	2.622	0.517	Cross	2	Pair of Wire Dog Staples
			J	1.428	1.186	Butt	2	JH 47x90
			G	0.266	0.420	Cross	2	Pair of Wire Dog Staples
			E	1.009	1.487	Cross	2	Pair of Wire Dog Staples
			F	0.725	1.080	Cross	2	Pair of Wire Dog Staples
J04	1	3227	F	3.101	2.385	Cross	1	Pair of Wire Dog Staples
			H	2.436	2.803	Butt	1	JH 47x90
J04A	1	3227	F	3.094	2.383	Cross	1	Pair of Wire Dog Staples
			H	2.403	2.798	Butt	1	JH 47x90
J04B	1	3227	F	2.723	1.187	Cross	1	Pair of Wire Dog Staples
			H	1.638	1.324	Butt	1	JH 47x90
			E	0.508	0.773	Cross	1	Pair of Wire Dog Staples
J05	1	2327	F	2.631	1.479	Cross	1	Pair of Wire Dog Staples
			H	1.306	1.284	Butt	1	JH 47x90
J05A	1	2327	F	2.515	0.850	Cross	1	Pair of Wire Dog Staples
			H	1.439	0.982	Butt	1	JH 47x90
			E	0.363	0.520	Cross	1	Pair of Wire Dog Staples
J05B	1	2327	F	2.631	1.479	Cross	1	Pair of Wire Dog Staples
			H	1.306	1.284	Butt	1	JH 47x90
J05C	1	2327	E	1.394	0.788	Cross	1	Pair of Wire Dog Staples
			G	1.475	0.994	Butt	1	JH 47x90
			D	0.350	0.515	Cross	1	Pair of Wire Dog Staples
J06	1	1427	E	2.407	0.724	Cross	1	Pair of Wire Dog Staples
			F	0.618	0.328	Butt	1	Pair of 3.15d Nails
J06A	1	1427	E	2.407	0.724	Cross	1	Pair of Wire Dog Staples
			F	0.618	0.328	Butt	1	Pair of 3.15d Nails
J06B	1	1427	E	2.390	0.512	Cross	1	Pair of Wire Dog Staples
			F	0.417	0.041	Butt	1	Pair of 3.15d Nails
			D	0.440	0.898	Cross	1	Pair of Wire Dog Staples
J06C	1	1427	E	2.390	0.512	Cross	1	Pair of Wire Dog Staples
			F	0.417	0.041	Butt	1	Pair of 3.15d Nails
			D	0.440	0.898	Cross	1	Pair of Wire Dog Staples
J07	1	2038	F	2.462	0.868	Cross	1	Pair of Wire Dog Staples
			H	1.149	0.791	Butt	1	JH 47x90
J07A	1	2038	F	2.461	0.744	Cross	1	Pair of Wire Dog Staples
			H	1.360	0.863	Butt	1	JH 47x90
			E	0.327	0.456	Cross	1	Pair of Wire Dog Staples
T04	3	6255	A	3.388	3.115	Cross	3	Pair of Wire Dog Staples
			E	3.773	3.178	Cross	3	Pair of Wire Dog Staples
T04A	2	6255	A	3.405	3.119	Cross	2	Pair of Wire Dog Staples
			E	3.415	3.115	Cross	2	Pair of Wire Dog Staples
T05	3	4235	F	2.314	2.383	Cross	3	Pair of Wire Dog Staples
			I	3.037	1.565	Butt	3	JH 47x90
T07	1	6500	A	2.541	2.324	Cross	1	Pair of Wire Dog Staples
			E	3.009	2.372	Cross	1	Pair of Wire Dog Staples
T12	1	7717	P	0.691	1.047	Butt	1	JH 47x90
			K	6.538	1.417	Cross	1	Pair of Wire Dog Staples
			O	3.728	2.685	Cross	1	Pair of Wire Dog Staples
TR01	1	4810	F	2.608	2.569	Butt	1	JH 47x90
			I	3.721	1.978	Butt	1	JH 47x90
V01	1	2662	A			Wide		No fixing selected
V02	1	5324	A			Wide		No fixing selected
V03	1	7060	A			Wide		No fixing selected
V04	1	1360	A			Wide		No fixing selected
V05	1	1463	A			Wide		No fixing selected
V06	1	1800	A			Wide		No fixing selected
V07	1	3600	A			Wide		No fixing selected
V08	1	5400	A			Wide		No fixing selected
V09	1	7200	A			Wide		No fixing selected
V10	1	971	A			Wide		No fixing selected
V11	1	1871	A			Wide		No fixing selected
V12	1	1138	A			Wide		No fixing selected
V13	1	1961	A			Wide		No fixing selected
V14	1	2460	A			Wide		No fixing selected
V15	1	1489	A			Wide		No fixing selected

Fixing List

Qty	Selected Fixing
43	CT 200 pair
3	JH 47x120
2	10kN Truss to Top Plate
1	JH 47x190
36	JH 47x90
96	Pair of Wire Dog Staples
4	Pair of 3.15d Nails
15	No fixing selected

KDC - Approved Building Consent Document - BC210441 - Pg 110 of 336 - 30/08/2021 - ComplyNZ

Job: 31122
Client: Coastal Homes
Phone:
Site: Kendall
Lot 81 The Sanctuary
Mangawhai
DP 556753
Description:
Building Consent No.:
Phone:

Note:
1) Fixings have been selected based on loading only. Please check that selected fixings are practical for each situation and that appropriate nailing can be applied on site.
2) Fixings are selected from the LUMBERLOK Brochure 08/2014 (Timber Connectors Characteristic Loadings Data) with down and uplift characteristic loads of at least the values shown for each joint.

KDC - Approved Building Consent Document - BC210441 - Pg 111 of 336 - 30/08/2021 - ComplyNZ

Job: 31122
Client: Coastal Homes
Phone:
Site: Kendall
Lot 81 The Sanctuary
Mangawhai
DP 556753
Description:
Building Consent No.:
Phone:

TRUSS BEARINGS EXCEEDING 10KN REPORT - Ultimate Limit State Loads

MiTek® Truss List

Legend: ? = input only, ~~Txx~~ = failed design, Ø = non certified, Unmarked trusses = designed successfully

Critical Trusses	Qty	Span (mm)	Joint	Bearing Reactions (kN) Down	Uplift
T06A	1D	6500	A	10.713	11.950

KDC - Approved Building Consent Document - BC210441 - Pg 112 of 336 - 30/08/2021 - ComplyNZ

Note:
1) Select appropriate Slab Thickening Detail from the MiTek 'Internal Load Bearing On Concrete Floor Slabs' brochure.

BRANZ NZS 4218:2009 CALCULATION METHOD TOOL

PROJECT SUMMARY

Project name	Linda Kendall New Residence
Address	ot 81 The Sanctuary, Mangawhai
Designer	Marc Vale
Address	10 Danny Place, Pyes Pa, Tauranga
Phone	O21471119
Date	22/06/21
Reference number	

Climate zone	1: Northland, Auckland, Thames-Coromandel districts	
Wall construction type	1: Any wall type	
If mixed wall types	0	Percentage of wall area solid timber construction
	0	Percentage of wall area high thermal mass construction
	100	Percentage of wall area "Any wall type"
If solid timber wall	1: External 75 mm thick solid timber and timber framed internal walls	

Is there just one wall construction R-value (R_{Wall}) and one door (R_{Door}) construction R-value (but different to the walls) for the building? no

Summary of calculation method heat loss

Element	Area (m²)	Proposed building heat loss (W/°C)	Reference building heat loss (W/°C)	
Roofs/ceilings	269.7	80.0	93.0	
Walls	167.3	69.4	97.5	
Floors	269.7	130.3	207.5	
Vertical glazing	69.6	267.8	294.0	
Skylights	0.0	0.0	-	
Doors (Attributable)	17.9	14.3	-	
Total		561.9	692.0	W/°C

Glazing percentage: 27%
Glazing <50%: Yes
Minimum R-values OK: Yes
Issues to check:

PASS/FAIL **PASS**

KDC - Approved Building Consent Document - BC210441 - Pg 113 of 336 - 30/08/2021 - ComplyNZ

BRANZ NZS 4218:2009 CALCULATION METHOD TOOL

BUILDING ELEMENTS

Roofs/ceilings: Skylights are not included here. Enter them in the skylights table below.

Roof/ceiling element	Description	Area (m²)	Construction R-value	Heat loss
1	Metal tile roofing over layer of R3.6 fibreglass batt	269.69	3.37	80.0
2				
3				
4				
5				
	Total area	269.7 m²		
			Total roofs/ceilings heat loss	80.0 W/°C

Skylights: Skylights are at an angle of 60° or less to the horizontal. If the skylight R-value is not known, use a value of 0.15.

Skylight	Description	Area (m²)	Construction R-value	Heat loss
1				
2				
3				
4				
	From Skylight Schedule	0.0		0.0
	Total area	0.0 m²		
			Total skylight heat loss	0.0 W/°C

Walls: Doors are not included here. Enter them in the door table.
Each wall area is the total wall area less the glazing and door area for that wall

Wall element	Description	Area (m²)	Construction R-value	Heat loss
1	Ezpanel over cavity with 90mm framing and R2.6	167.3	2.41	69.4
2				
3				
4				
5				
6				
7				
8				
9				
10				
	Total area	167.3 m²		
			Total wall heat loss	69.4 W/°C

Floors: Only include the ground or exterior floors. Intermediate floors not exposed to the exterior are excluded.
H1/AS1 is not perm

Floor element	Description	Area (m²)	Construction R-value	Heat loss
1	Firth Ribraft	269.69	2.07	130.3
2				
3				
4				
5				
	Total area	269.7 m²		
			Floor heat loss	130.3 W/°C

Vertical glazing: Vertical glazing only (steeper than 60°), including glazing in doors. Skylights are on the Skylight table.
If the glazing R-value is not known, use a value of 0.15

Glazing element	Description	Area (m²)	Construction R-value	Heat loss
1	Refer to Element Schedule			
2				
3				
4				
5				
6				
7				
8				
9				
10				
	From Glazing Schedule	69.6		267.8
	Total area	69.6 m²		
			Total vertical glazing heat loss	267.8 W/°C

Doors: Only the non-glazed area of doors is included. The glazed area of doors must be entered in the Glazing table.
The heat loss of doors is automatically set to 0 if the total door area is ≤ 6m² or 6% of the total wall area.
If the area of doors are above 6m² or 6% of the total wall area then the marginal heat loss needs to be considered.
If the insulation values of the walls are different or the insulation value of the doors are different then
the assignable heat loss due to doors can not be calculated using this tool.
If the R-value of a door is not entered a default value of R 0.18 is automatically used.

Door element	Description	Area (m²)	Construction R-value	Heat loss
1	Refer to Element Schedule			0.0
2				0.0
3				0.0
4				0.0
5				0.0
	From Door Schedule	17.9	0.18	99.2
	Total area	17.9 m²		
15.29052	Attributable	2.6	0.18	14.3 W/°C

KDC - Approved Building Consent Document - BC210441 - 30/08/2021 - Page 114 of 336

BRANZ NZS 4218:2009 CALCULATION METHOD TOOL

Vertical Glazing Schedule

Vertical glazing: Vertical glazing only (steeper than 60°), including glazing in doors. Skylights are on the Skylight table.
If the glazing R-value is not known, use a value of 0.15

ID	Description	Quantity	Height (mm)	Width (mm)	Construction R-value	Area (m²)	Heat loss
1	D0.01	1	2200	890	0.26	2.0	7.5
2	D0.02	1	2200	3500	0.26	7.7	29.6
3	D0.03	1	2200	3500	0.26	7.7	29.6
4	D0.04	1	2200	900	0.26	2.0	7.6
5	D0.05	1	2200	900	0.26	2.0	7.6
6	D0.09	1	2200	3500	0.26	7.7	29.6
7	D0.10	1	2200	3500	0.26	7.7	29.6
8	D0.11	1	2200	3500	0.26	7.7	29.6
9	D0.12	1	2200	1800	0.26	4.0	15.2
10	D0.13	1	2200	1800	0.26	4.0	15.2
11	W0.01	1	2200	700	0.26	1.5	5.9
12	W0.02	1	1300	1500	0.26	2.0	7.5
13	W0.03	1	1300	1500	0.26	2.0	7.5
14	W0.04	1	2200	700	0.26	1.5	5.9
15	W0.05	1	2200	600	0.26	1.3	5.1
16	W0.06	1	2200	700	0.26	1.5	5.9
17	W0.07	1	2200	700	0.26	1.5	5.9
18	W0.08	1	2200	800	0.26	1.8	6.8
19	W0.09	1	1300	1600	0.26	2.1	8.0
20	W0.10	1	1300	1600	0.26	2.1	8.0
21							
22							
23							
24							
25							
26							
27							
28							
29							
30							
31							
32							
33							
34							
35							
36							
37							
38							
39							
40							
41							
42							
43							
44							
45							
46							
47							
48							
49							
50							
51							
52							
53							
54							
55							
56							
57							
58							
59							
60							
					Total area	69.6	m²
					Total vertical glazing heat loss		267.8

KDC - Approved Building Consent Document - BC210441 - Pg 115 of 336 - 30/08/2021 - ComplyNZ

Door Schedule

Doors: Only the non-glazed area of doors is included. The glazed area of doors must be entered in the Glazing table.
The heat loss of doors is automatically set to 0 if the total door area is ≤ 6m² or 6% of the total wall area.
If the area of doors are above 6m² or 6% of the total wall area then the marginal heat loss needs to be considered.
If the insulation values of the walls are different or the insulation value of the doors are different then
the assignable heat loss due to doors can not be calculated using this tool.
If the R-value of a door is not entered a default value of R 0.18 is automatically used.

ID	Description	Quantity	Height (mm)	Width (mm)	Construction R-value	Area (m²)	Heat loss
1	D0.06	1	2200	1600	0.18	3.5	19.6
2	D0.07	1	2200	5000	0.18	11.0	61.1
3	D0.08	1	2200	1520	0.18	3.3	18.6
4							
5							
6							
7							
8							
9							
10							
11							
12							
13							
14							
15							
16							
17							
18							
19							
20							

Total area 17.9 m²
Total door heat loss 99.2

Skylight Schedule

Skylights: Skylights are at an angle <= 60° to the horizontal. If the skylight R-value is not known, use of 0.15.

ID	Description	Quantity	Height (mm)	Width (mm)	Construction R-value	Area (m²)	Heat loss
1							
2							
3							
4							
5							
6							
7							
8							
9							
10							
11							
12							
13							
14							
15							
16							
17							
18							
19							
20							

Total area 0.0 m²
Total skylight heat loss 0.0

KDC - Approved Building Consent Document - BC210441 - Pg 1 of 336 - 30/08/2021 - ComplyNZ

designIT® HOUSES

CarterHoltHarvey LVL

Date printed: 21 June 2021
Page: 1 of 7

KDC - Approved Building Consent Document - BC210441 - Pg 117 of 336 - 30/08/2021 - ComplyNZ

DESIGN CERTIFICATE

Technical basis for structural design methodology contained in designIT for houses - New Zealand.

designIT for houses, New Zealand has been developed by experienced timber engineers to assist designers in selecting appropriate sizes of structural laminated veneer lumber products manufactured by Carter Holt Harvey LVL Limited (including hySPAN, hy90, hyONE and hyJOIST) and other generic stress grades of timber, to be used as structural elements for the construction of buildings that fall within the scope of NZS 3604.

The design methodology used for the software complies with the loading and general design requirements contained within AS/NZS 1170 and with timber structural design in accordance with NZS 3603:1993 including Amendment 4 (Verification method B1/VM1, 6.1).

designIT relies on the accurate input of span and loading information by the user. Where accurate inputs are submitted the product and/or stress grade and the size given will comply with the structural requirements of the New Zealand Building Code (NZBC), provided the installation is in accordance with the installation requirements provided by designIT and/or in product literature and/or NZS 3604, or specific engineering design, as appropriate.

Futurebuild LVL and SG8 components, when used and treated to the required treatment levels prescribed in NZS 3602 and NZS 3604, as modified by Acceptable Solution B2/AS1, will comply with the requirements of the NZBC (Acceptable Solution B2/AS1, 3.2).

References:
1. NZS 3603:1993 Timber Structures Standard.
2. NZS 3604:2011 Timber-framed buildings.
3. AS/NZS 1170:2002 Structural design actions, Parts 0 and 1.
4. AS/NZS 1170:2011 Structural design actions, Part 2: Wind actions.
5. AS/NZS 1170:2003 Structural design actions, Part 3: Snow and ice actions.
6. AS 1720.1:2010 Timber structures. Part 1: Design methods.
7. AS 1720.3:2016 Timber structures. Part 3: Design criteria for timber-framed residential buildings.

This Design Certificate, and any associated warranty/certification, is void where there has been substitution of alternate products not detailed within the Member Specification.

Version date: 3 February 2021

For further information or advice contact:
Carter Holt Harvey LVL Limited,
173 Captain Springs Road, Onehunga. Auckland
Telephone: 0800 808 131
Email: designit@futurebuild.co.nz
Web: https://futurebuild.co.nz/

Specifier details:

Specifier:	Marc R. Vale
Business name:	Cadetailer Limited
Address:	10 Danny Place Pyes Pa Tauranga 3112
Email:	marc@cadetailer.co.nz

Project & site details:

Project:	Kendall
Site address:	Lot 81 The Sanctuary Mangawhai
For (owner/s):	CH Northland Ltd.
Design wind zone	High
Snow loading	Design snow zone: N0

MEMBER DESIGN DETAILS

Member 1

1) Member code and description	L1 - Lintels - Supporting girder truss / truncated girder truss
2) Date prepared	21 June 2021

designIT® HOUSES

CarterHoltHarvey LVL

Date printed: 21 June 2021
Page: 2 of 7

3) Serviceability criteria AS 1720.1: 2010 and AS 1720.3: 2016

4) Design inputs

Roof type	Light roof and ceiling - 40 kg/m²
Roof pitch	25.0 °
Truss spacing	900 mm
Eaves overhang	600 mm
TGT span	6500 mm
TGT setback	3250 mm
TGT offset	1480 mm
Lintel span	1600 mm
Nominal wall thickness	90 mm

5) Member specification

Size, stress grade/product	Use 150 x 90 hy90
Material type	Structural Laminated Veneer Lumber to AS/NZS 4357

6) Serviceability

Load case	Limit[3] on average deflection[2]	Estimated average deflection[2]	Rigidity ratio[4]
Long term load - $G + \Psi_L Q^*$	5.3 mm	1.1 mm (long term)	4.8
Live load - $\Psi_s Q$	6.4 mm	0.3 mm	19.5
Wind load - W_s	8.0 mm	1.0 mm	8.1

*Critical serviceability load case
See 'Notes for interpretation of serviceability data' at the end of this report

7) Reactions

		Limit States Design Reaction[2,3]
Load case	k_1[1]	End kN[4]
1.35G	0.60	-4.2
1.2G + 1.5Q	0.80	-6.5
$1.2G + W_u + \Psi_c Q$	1.00	-9.2
$0.9G + W_u$	1.00	6.0

8) Installation requirements

- Provide at least 30 mm bearing at end supports

Member 2

1) Member code and description L2 - Lintels - Supporting girder truss / truncated girder truss

2) Date prepared 21 June 2021

3) Serviceability criteria AS 1720.1: 2010 and AS 1720.3: 2016

KDC - Approved Building Consent Document - BC210441 - Pg 118 of 336 - 30/08/2021 - ComplyNZ

designIT® HOUSES

CarterHoltHarvey LVL

Date printed: 21 June 2021
Page: 3 of 7

KDC - Approved Building Consent Document - BC210441 - Pg 119 of 336 - 30/08/2021 - ComplyNZ

4) Design inputs

Roof type	Light roof and ceiling - 40 kg/m²
Roof pitch	25.0 °
Truss spacing	900 mm
Eaves overhang	600 mm
TGT span	6500 mm
TGT setback	3250 mm
TGT offset	580 mm
Lintel span	1500 mm
Nominal wall thickness	90 mm

5) Member specification

Size, stress grade/product	Use 150 x 90 hy90
Material type	Structural Laminated Veneer Lumber to AS/NZS 4357

6) Serviceability

Load case	Limit[3] on average deflection[2]	Estimated average deflection[2]	Rigidity ratio[4]
Long term load - $G + \Psi_L Q^*$	5.0 mm	1.7 mm (long term)	2.9
Live load - $\Psi_s Q$	6.0 mm	0.5 mm	11.6
Wind load - W_s	7.5 mm	1.6 mm	4.8

*Critical serviceability load case
See 'Notes for interpretation of serviceability data' at the end of this report

7) Reactions

		Limit States Design Reaction[2,3]
Load case	k_1[1]	End kN[4]
1.35G	0.60	-3.6
1.2G + 1.5Q	0.80	-5.7
$1.2G + W_u + \Psi_c Q$	1.00	-8.1
$0.9G + W_u$	1.00	5.2

8) Installation requirements

- Provide at least 30 mm bearing at end supports

Member 3

1) Member code and description L3 - Lintels - In single or upper storey load bearing walls

2) Date prepared 21 June 2021

3) Serviceability criteria AS 1720.1: 2010 and AS 1720.3: 2016

4) Design inputs

Span	3.5 m
Roof load width 'RLW'	7.5 m
Roof type and mass	Light roof and ceiling - 40 kg/m²
Nominal wall thickness	90 mm

5) Member specification

Size, stress grade/product	Use 300 x 90 hyONE
Material type	Structural Laminated Veneer Lumber to AS/NZS 4357

designIT® HOUSES

CarterHoltHarvey LVL

Date printed: 21 June 2021
Page: 4 of 7

KDC - Approved Building Consent Document - BC210441 - Pg 120 of 336 - 30/08/2021 - ComplyNZ

6 Serviceability

Load case	Limit[3] on average deflection[2]	Estimated average deflection[2]	Rigidity ratio[4]
Long term load - G + $\Psi_L Q^*$	10.0 mm	4.1 mm (long term)	2.5
Live load - $\Psi_s Q$	14.0 mm	1.2 mm	11.6
Wind load - W_s	17.5 mm	3.6 mm	4.8

*Critical serviceability load case
See 'Notes for interpretation of serviceability data' at the end of this report

7 Reactions

		Limit States Design Reaction[2,3]
Load case	k_1[1]	End kN[4]
1.35G	0.60	-8.1
1.2G + 1.5Q	0.80	-12.5
1.2G + W_u + $\Psi_c Q$	1.00	-17.6
0.9G + W_u	1.00	11.2

8 Installation requirements

- Provide at least 30 mm bearing at end supports

Member 4

1 Member code and description — L4 - Lintels - In single or upper storey load bearing walls

2 Date prepared — 21 June 2021

3 Serviceability criteria — AS 1720.1: 2010 and AS 1720.3: 2016

4 Design inputs

Span	5.0 m
Roof load width 'RLW'	4.0 m
Roof type and mass	Light roof and ceiling - 40 kg/m²
Nominal wall thickness	90 mm

5 Member specification

Size, stress grade/product	Use 2/360 x 45 hySPAN
Material type	Structural Laminated Veneer Lumber to AS/NZS 4357

6 Serviceability

Load case	Limit[3] on average deflection[2]	Estimated average deflection[2]	Rigidity ratio[4]
Long term load - G + $\Psi_L Q^*$	10.0 mm	6.2 mm (long term)	1.6
Live load - $\Psi_s Q$	15.0 mm	1.7 mm	8.8
Wind load - W_s	25.0 mm	5.2 mm	4.8

*Critical serviceability load case
See 'Notes for interpretation of serviceability data' at the end of this report

designIT® HOUSES

CarterHoltHarvey LVL

Date printed: 21 June 2021
Page: 5 of 7

7) Reactions

		Limit States Design Reaction[2,3]
Load case	k_1[1]	End kN[4]
1.35G	0.60	-6.2
1.2G + 1.5Q	0.80	-9.3
1.2G + W_u + Ψ_cQ	1.00	-13.0
0.9G + W_u	1.00	7.7

8) Installation requirements

- Provide at least 30 mm bearing at end supports
- Vertical lamination in accordance with Detail H1.

Member 5

1) Member code and description L5 - Lintels - In single or upper storey load bearing walls

2) Date prepared 21 June 2021

3) Serviceability criteria AS 1720.1: 2010 and AS 1720.3: 2016

4) Design inputs

Span	3.5 m
Roof load width 'RLW'	4.5 m
Roof type and mass	Light roof and ceiling - 40 kg/m²
Nominal wall thickness	90 mm

5) Member specification

Size, stress grade/product	Use 2/240 x 45 hySPAN
Material type	Structural Laminated Veneer Lumber to AS/NZS 4357

6) Serviceability

Load case	Limit[3] on average deflection[2]	Estimated average deflection[2]	Rigidity ratio[4]
Long term load - G + Ψ_LQ*	10.0 mm	5.7 mm (long term)	1.8
Live load - Ψ_sQ	14.0 mm	1.7 mm	8.4
Wind load - W_s	17.5 mm	5.0 mm	3.5

*Critical serviceability load case
See 'Notes for interpretation of serviceability data' at the end of this report

7) Reactions

		Limit States Design Reaction[2,3]
Load case	k_1[1]	End kN[4]
1.35G	0.60	-5.2
1.2G + 1.5Q	0.80	-8.0
1.2G + W_u + Ψ_cQ	1.00	-11.2
0.9G + W_u	1.00	7.0

8) Installation requirements

- Provide at least 30 mm bearing at end supports
- Vertical lamination in accordance with Detail H1.

KDC - Approved Building Consent Document - BC210441 - Pg 121 of 336 - 30/08/2021 - ComplyNZ

designIT® HOUSES

CarterHoltHarvey LVL

Date printed: 21 June 2021
Page: 6 of 7

KDC - Approved Building Consent Document - BC210441 - Pg 122 of 336 - 30/08/2021 - ComplyNZ

Notes for interpretation of serviceability data

1. 'average deflection' is an engineering concept based upon a notional estimated load, notional member rigidity and, in some cases, an approximate model of material response to environmental conditions. These parameters are, 'standardised' in AS 1170 and AS 1720.

2. Deflection is the flexural response to load 'out-of-level' measurements of installations are not necessarily deflections and can incorporate 'initial out-of-straightness', whether intended or not. Furthermore, loads can be higher/lower than the notional estimate and in any comparison with measured levels, material variability needs to also be considered. AS 1720 gives the following basis for estimation of upper bound deflections for various materials.

No 1 Framing – visually graded to NZS 3631	Average + 100%
SG grades - mechanically graded to AS/NZS 1748	Average + 43%
GL grades for glulam to AS 1328	Average + 33%
LVL to AS/NZS 4357 (includes hySPAN and hyJOIST)	Average +18%

As can be seen, comparison of the 'average deflection' for different materials, even if calculated on the same basis, does not give the whole picture!

3. The limits referred are those specified in AS 1720.3 for the stated load case.

4. 'Rigidity ratio' expresses the rigidity of the specified beam relative to the rigidity of a notional beam just meeting the serviceability requirements detailed.

Notes for interpretation of reaction data

1. Duration of load factor 'k_1' for strength as per NZS 3603:1993
2. Negative (-) reactions relate to the 'gravity' or 'downwards' force on the support
3. Positive reactions relate to the 'upwards' forces or 'tie-down' requirement on the support
4. End reaction includes allowance for overhang/cantilever where one has been designed

Detail H1: Vertical Lamination - Two Pieces

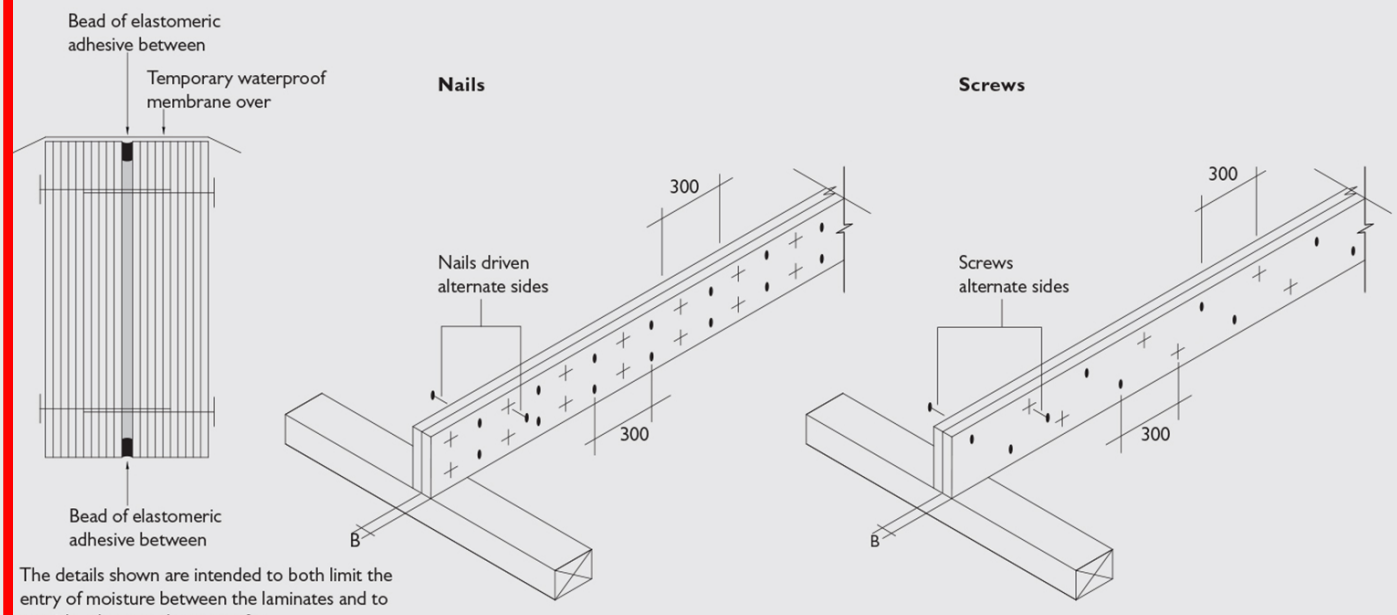

The details shown are intended to both limit the entry of moisture between the laminates and to provide adequate shear transfer.

Section Size 'B'	Minimum Nail Diameter	Minimum Nail Length	Minimum Screw gauge	Minimum Screw Length
35	3.06 mm	75 mm	-	-
45	3.30 mm	90 mm	14 g	75 mm
63	3.30 mm	100 mm	14 g	100 mm
90	-	-	14 g	150 mm

designIT® HOUSES

CarterHoltHarvey LVL

KDC - Approved Building Consent Document - BC210441 - Pg 123 of 336 - 30/08/2021 - ComplyNZ

Fibreglass Swimming Pools

Design Calculations

For

Freedom Pools

May 2017

Prepared By

Ronald Bell
Grad Cert (Tech Mgt), BEng Civil (Hons), PEng,MIEAust (891940), MIPENZ(1027605),RPEQ(6715),RBP(Vic)(EC27967),RBP(NT)(60596ES),RBP(Tas)(CC5556C),MAIB(9225), JP(Qual).
SUMMERMORE Pty Ltd ABN 42 108 898 433
PO Box 1671
Browns Plains BC
Queensland, 4118
Tel: 07 3800 0973 Fax: 07 3800 1860 Mob:0438288116
E: ron@summermore.com.au
W: www.summermore.com.au

KDC - Approved Building Consent Document - BC21 0441 - Pg 124 of 336 - 30/08/2021 - ComplyNZ

1 INTRODUCTION

This report contains calculations which set out both the properties and design details for the fibreglass swimming pool and has been prepared for Freedom Pools.

The work has been carried out considering pressures exerted on pools by the expansion of reactive clays due to seasonal changes. This method of assessing these pressures has been used for designing pools for the above mentioned areas. These pressure calculations were based on the section on surface movements calculations set out in AS2870: Residential Slabs and Footings.

Designs were carried out in accordance with AS/NZS1838-1994: Swimming Pools-Premoulded Fibre Reinforced Plastics-Design and Fabrication. The designs were checked using a structural analysis program.

KDC - Approved Building Consent Document - BC210441 - Pg 125 of 336 - 30/08/2021 - CompyNZ

KDC - Approved Building Consent Document - BC210441 - Pg 126 of 336 - 30/08/2021 - ComplyNZ

2.0 MATERIALS AND LOADING

2.1 Material Properties

The material used in fabrication is of two types:

1. Conventional GRP layup.

-Panel tests:

Tensile strength	60	MPa
Flexural strength	130	MPa
Flexural modulus	7700	MPa
Shear strength	70	MPa

-Core material:

Flexural strength	30	MPa
Flexural modulus	4000	MPa

2.2 Design Loads

In accordance with AS/NZS1838 the pools were designed for a surcharge load of 2kPa, with a minimum soil density of 20 kN/m^3 and an earth pressure coefficient of k_a = 1.0 for end walls. (to allow for arching effect) and k_a = 0.33 elsewhere.

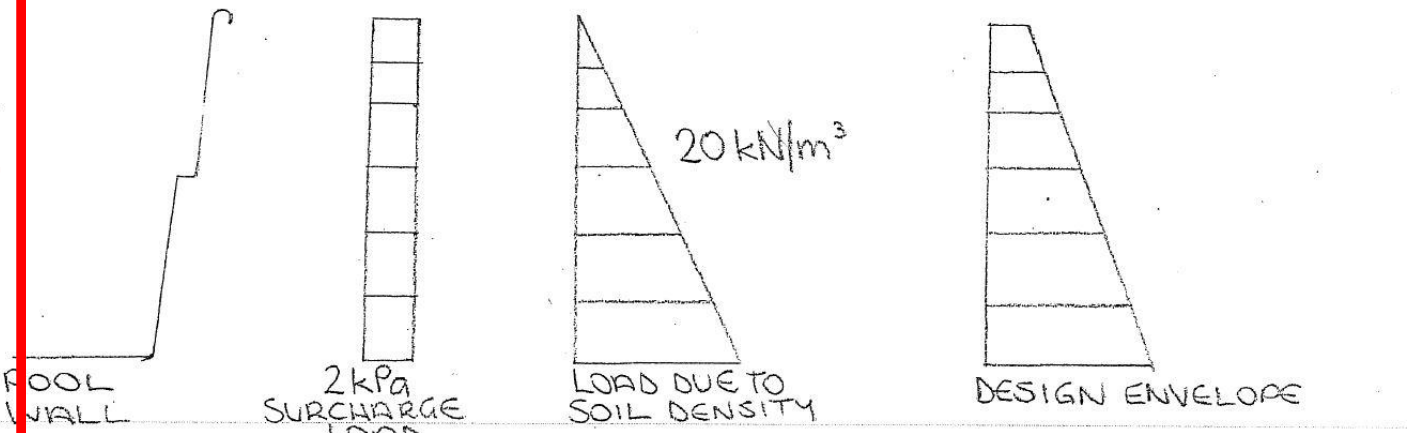

FIGURE 2.1 DESIGN LOAD ENVELOPE

The pools were designed to withstand soil and surcharge:

1. to cover a standard range of soil conditions
2. to cover possible short term water table build up and
3. maintenance without internal support.

The overall mechanics are summarised below:

1. fibreglass walls span between ribs, or between coping, step ledge & radius
2. the rib spans from the coping to the floor
3. coping forms a ring beam around edge of pool
4. the floor is installed with a 50mm camber downwards to help act as a compression member to carry loads from ribs to walls

Pools have been designed for loadings as per AS/NZS1838. Possible pressures due to reactive clays will be examined and compared with the above design envelope.

SUMMERMORE Pty Ltd
39 Dampier Crescent
Drewvale
Queensland, 4116
Phone : 07 3800 0973
Fax : 07 3800 1860
ACN : 108 898 433
ABN : 42 108 898 433

Project	FREEDOM POOLS			
Calculation				
Designer	RAB	Date		Page 3 of
Project No.	10261	Client		

KDC - Approved Building Consent Document - BC210441 - Pg 127 of 336 - 30/08/2021 - ComplyNZ

23 SECTION PROPERTIES

COPING : 360w x 125d with 3/512.
Concrete N25/20/100

Area = 360 x 125 = 45000 mm^2
I_{yy} = 125 x $360^3/12$ = 486×10^6 mm^4
Z_{yy} = $486 \times 10^6 / 180$ = 2.7×10^6 mm^3
I_{33} = $360 \times 125^3/12$ = 58.6×10^6 mm^4
J_{33} = $(486 + 58.6) \times 10^6$ = 545×10^6 mm^4

SWIMOUT : 609w + 8t Take 100 return each side.

Area = $2 \times 100 \times 8 + 609 \times 8$ = 6472 mm^2
I_{yy} = $8 \times 609^3/12 + 2(100 \times 8^3)/12 + 900 \times 54.5^2$
= 153×10^6 mm^4
I_{33} = $2 \times 8 \times 100^3/12 + 900 \times 54.5^2 + 609 \times 8^3/12$.
= 4.03×10^6 mm^4

STEPLEDGE (FRP) : I_{yy} = 17×10^6 mm^4
I_{33} = 169×10^6 mm^4
J_{33} = 186×10^6 mm^4

STEPLEDGE (Comp) : I_{yy} = 289×10^6 mm^4
I_{33} = 2380×10^6 mm^4
J = 2670×10^6 mm^4

RADIUS : R = 300 t = 8
$I_{xy} = I_{yy}$ = 86.9×10^6 mm^4
J = 174×10^6 mm^4

FLOOR : 1000 band
A = 4200 mm^2
I_{33} = 6174 mm^4
I_{yy} = 350×10^6 mm^4
J = 350×10^6 mm^4.

SUMMERMORE Pty Ltd
39 Dampier Crescent
Drewvale
Queensland, 4116
Phone : 07 3800 0973
Fax : 07 3800 1860
ACN : 108 898 433
ABN : 42 108 898 433

Project	FREEDOM POOLS			
Calculation				
Designer	RAB	Date		Page 4 of
Project No.	10261	Client		

KDC - Approved Building Consent Document - BC210441 - Pg 128 of 336 - 30/08/2021 - ComplyNZ

WALL PROFILE

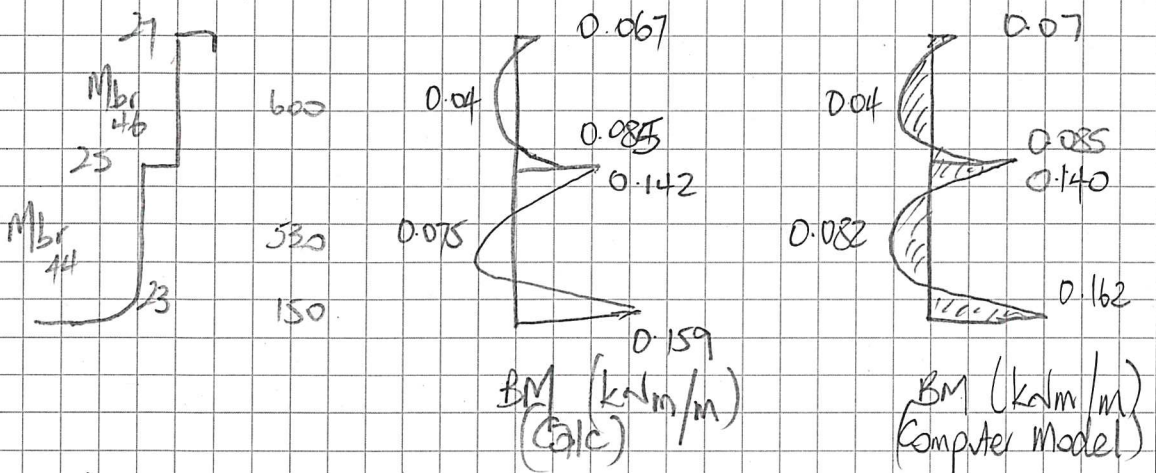

DEMONSTRATES THAT COMPUTER MODEL CORRELATES VERY WELL WITH BM DISTRIBUTION.

COPING.

LOAD = $0.66 \times 0.6/2 + (4.62 - 0.66 \times 0.6)/2 \times 1/3 = 0.6$ kN/m

$BM_{sp.} = 0.6 \times 6^2/24 = 0.9$ kNm

$BM_{cant} = 0.6 \times 6^2/12 = 1.8$ kNm

$Z_t = 27 \times 10^6$ mm³

$Z_c = 82.7 \times 10^3$ mm³

$M/Z_{span} = 0.9 \times 10^6 / 82.7 \times 10^3 = 10.9$ MPa .: ok

$M/Z_{cant} = 1.8 \times 10^6 / 82.7 \times 10^3 = 21.8$ MPa .: ok

$\delta = L/114$.: ok

STEPLEDGE:

LOAD = 8.85 kNm

$M/Z = 8.85 \times 10^6 / 32 \times 10^3 = 283$ MPa .: ok

$\delta = 4.47$ mm $(L/1342)$.: ok

WALL:

LOAD = 0.375 kNm

$M/Z = 0.375 \times 10^6 / 6249 = 60$ MPa .: ok

$\delta = 4.2$ mm $(L/142)$.: ok.

COPING, STEPLEDGE, WALL ALL OK.

KDC - Approved Building Consent Document - BC210441 - Pg 129 of 336 - 30/08/2021 - ComplyNZ

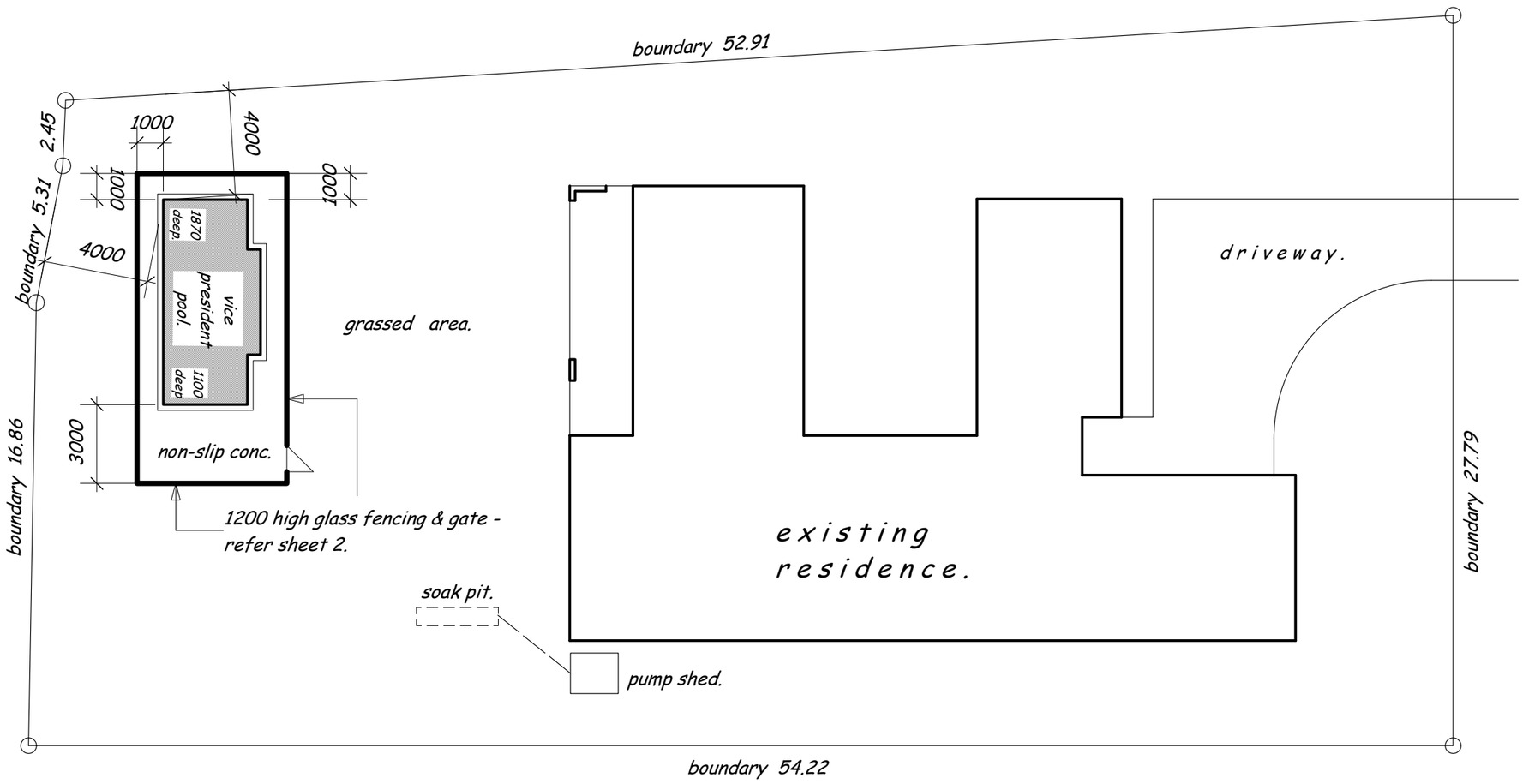

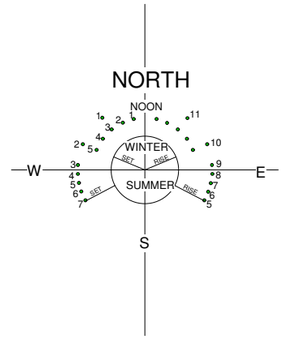

layout plan.

1:200 @ A3.

SITE STATISTICS :
nett site area - 1410 sq.m.
area of existing dwellings - 317 sq.m.
THEREFORE SITE COVERAGE - 23 %.
area of existing & proposed paving. - 105 sq.m.
area of buildings & all paving - 422 sq.m. - 30%
THEREFORE PERMEABLE AREA - 988 sq.m. - 70%.

smoke alarms :
smoke alarms to be fitted within 3m of all bedroom doors.

lot 14.
DP 507653.
area 1410 sq.m.

EXCAVATION :
area of excavation - 45 sq.m.
volume of excavation - 68 cub.m.

- check all dimensions and levels on site. DO NOT SCALE.
- all branded materials to be fixed strictly to manufacturers specifications and details.

proposed pool
43 Grayson Road.
Wainui. 0992 .

FREEDOM POOLS & SPAS.
phone 09 426 5323.
fax. 09 426 5325.
14 - unit 1 & 2 Agency Lane.
Silverdale, Auckland

job no. 21/109.
February. 2021.
sheet no. 1.

KDC - Approved Building Consent Document - BC210441 - Pg 130 of 336 - 30/08/2021 - ComplyNZ

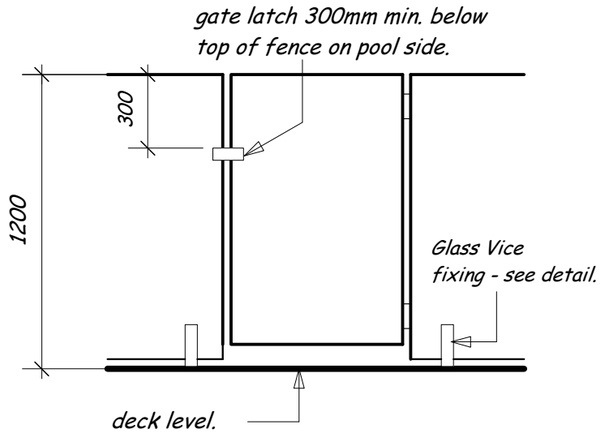

typical glass pool fencing/gate details.

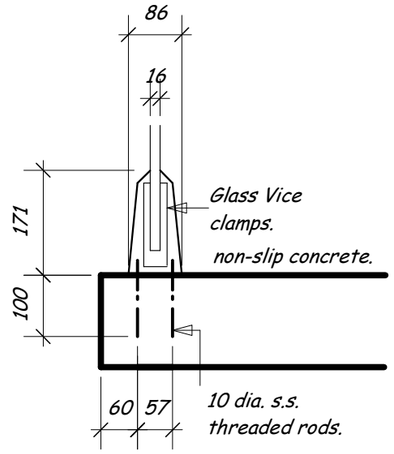

Glass Vice clamps - direct fix.

1:10 @ A3.

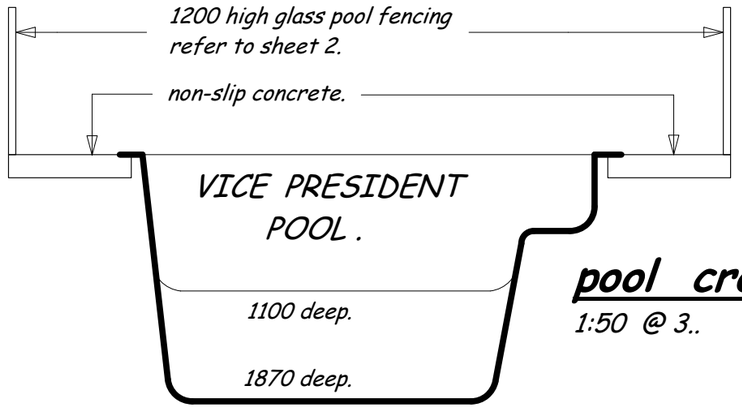

pool cross section.

1:50 @ 3..

hydrostatic relief valve
fitted at deep end.

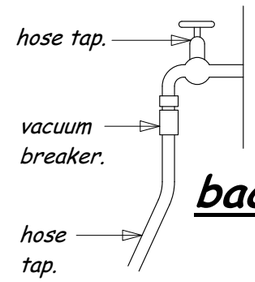

back flow prevention.

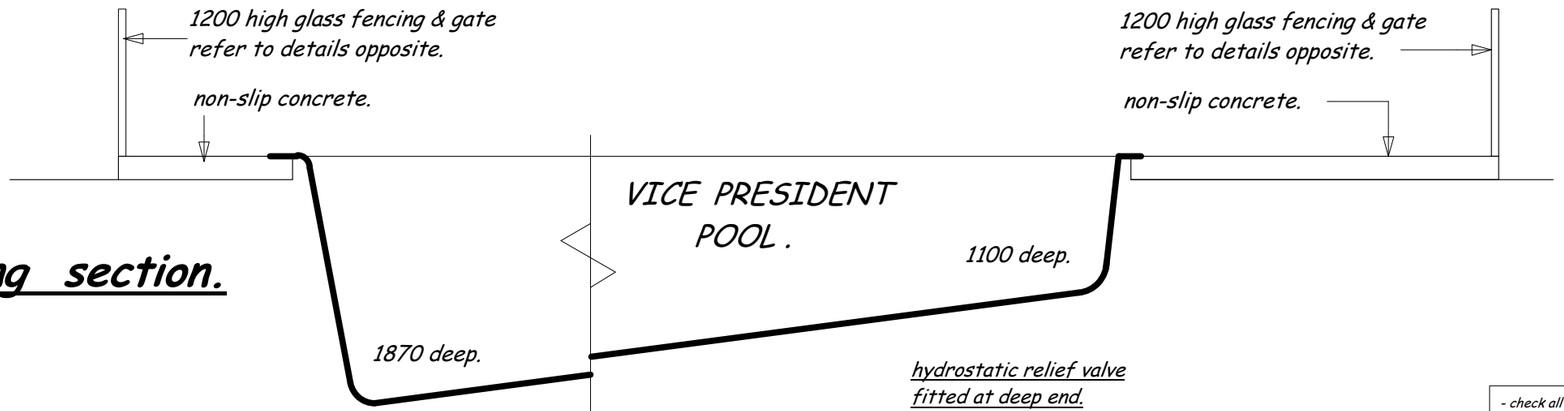

pool long section.

1:50 @ 3..

- check all dimensions and levels on site. DO NOT SCALE.
- all branded materials to be fixed strictly to manufacturers specifications and details.

proposed pool
43 Grayson Road.
Wainui. 0992 .

FREEDOM POOLS & SPAS.
phone 09 426 5323.
fax. 09 426 5325.
14 - unit 1 & 2 Agency Lane.
Silverdale, Auckland

job no. 21/109.
February. 2021.
sheet no. 2.

MODULINE POOLSIDE FENCING

SPECIFICATION FOR STANDARD RESIDENTIAL POOL SAFETY FENCING

KDC - Approved Building Consent Document - BC210441 - Pg 131 of 336 - 30/08/2021 - ComplyNZ

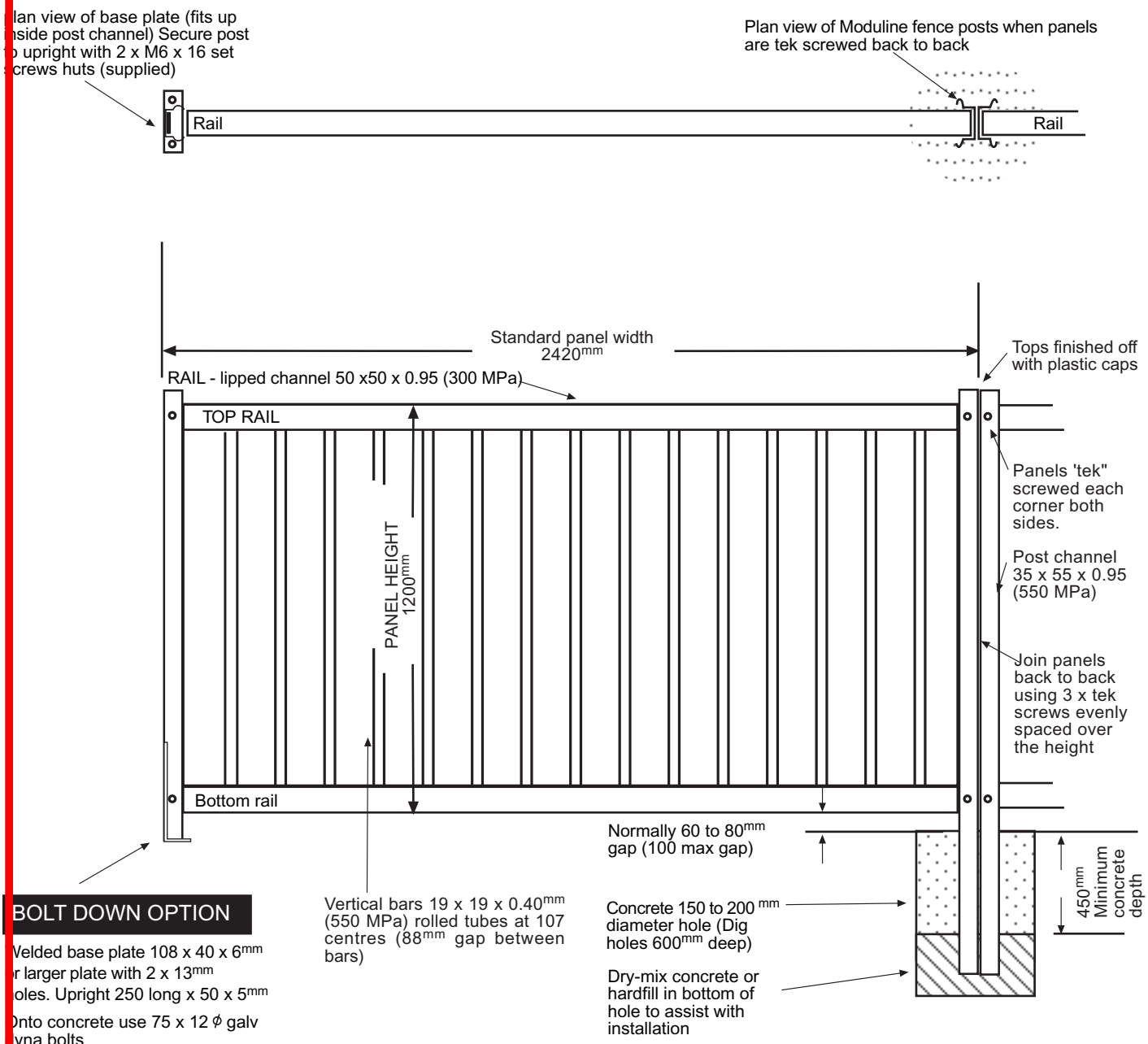

DRAWING NOT TO SCALE

METAL ROLLFORMING LIMITED
39 THOMAS PEACOCK PL, PANMURE, PO BOX 18-217, AUCKLAND 1743, PHONE (09)527-7897, FAX (09)527-7896

© Copyright 2008
MODULINE COLORSCREEN POOLSIDE are the registered trademarks and property of Metal Rollforming Ltd

Installation Instructions
Procedimientos de instalación
Instructions d'installation

TRUClose® HINGES SERIES 3

Regular models - Use 10g screws
Heavy Duty models - Use 12g screws

D® D&D Technologies

Adjust tension for correct closure.
See back page for tension adjustment instructions.

Ajuste la tensión para el cierre correcto.
Vea contraportada para instrucciones de ajuste de tensión.

Ajuster la tension pour la fermeture correcte.
Voir de retour la page pour les instructions d'ajustement de tension.

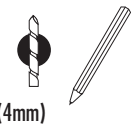
10g - 5/32" (4mm)
12g -11/64 " (4.5mm)



3 1/2" (90mm)

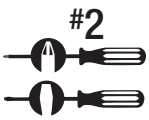

1/4 " (6mm) straight edge


Level

GATE GAP: 2 ALIGNMENT LEG models (L2)
ESPACIO DE LA PUERTA CON : 2 PATAS DE ALINEAMIENTO
ESPACEMENT DE PORTILLON :
MODÈLES AVEC 2 PATTES D'ALIGNEMENT (L2)

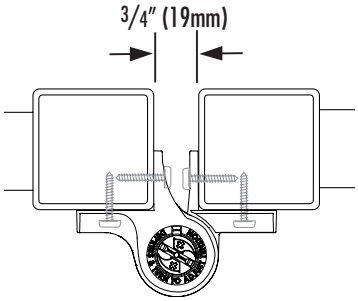

1

USE MAXIMUM SPACING BETWEEN HINGES

USAR MÁXIMO ESPACIO ENTRE BISAGRAS

UTILISER LE PLUS D'ESPACE POSSIBLE ENTRE LES CHARNIÈRES

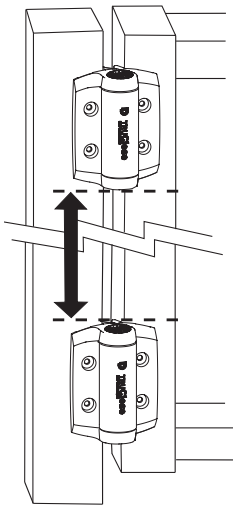

2 **INSTALL HINGES TO GATE FIRST**

INSTALAR BISAGRAS PRIMERO A LA PUERTA

INSTALLER LES CHARNIÈRES SUR LE PORTILLON EN PREMIER

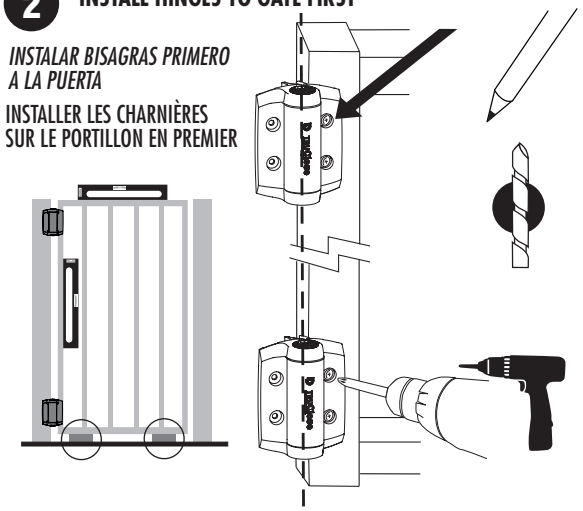

3 **INSTALL HINGES TO FENCE POST**

INSTALAR BISAGRAS AL POSTE DE LA CERCA

INSTALLER LES CHARNIÈRES AU POTEAU DE LA CLÔTURE

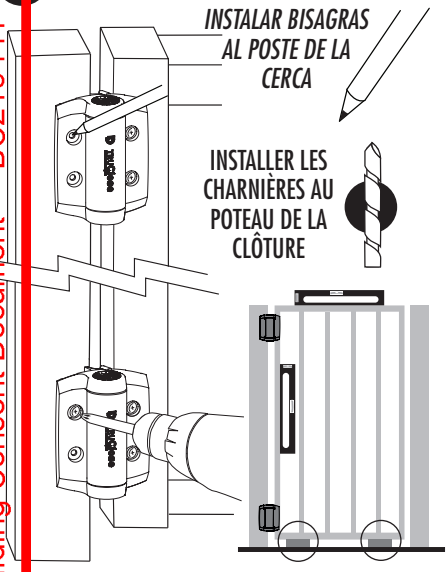

4 **TRIMS/COVERS**

RIBETES/CUBIERTAS

BORDURES/COUVERCLES

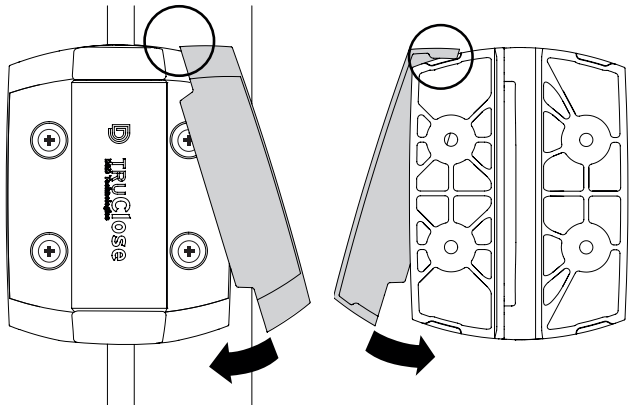

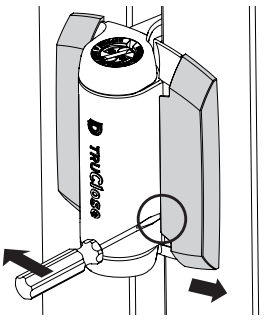

To remove covers
Retirar las cubiertas
Retrait des bordures/ couvercles

ADJUST TENSION WITH GATE CLOSED
AJUSTAR LA TENSIÓN CON LA PUERTA CERRADA
RÉGLER LA TENSION AVEC LE PORTILLON FERMÉ

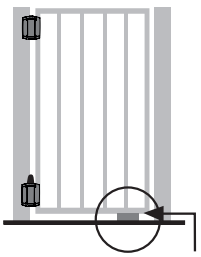

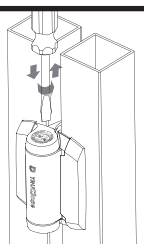

See other side for tension adjustment
Ver al reverso sobre el ajuste de la tensión
Consulter le verso pour le réglage de la tension

Important: For gates over 30lb (14kg), support gate while adjusting tension.

Importante: *Para las puertas de más de 30lb (14kg) sostener la puerta mientras se ajusta la tensión.*

Important : Supporter tout portillon de plus de 14 kg (30 livres) durant le réglage de la tension.

Optional Safety Cap prevents hinge being used as a foothold by toddlers.

Tapatornillos de seguridad ayudan a prevenir que la bisagra sea usada como punto de apoyo para pies en los niños pequeños.

Le capuchon optionnel de sécurité empêche les enfants de se tenir sur la charnière.

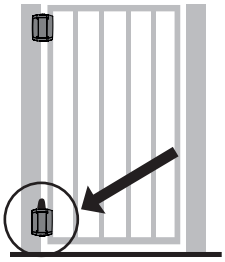

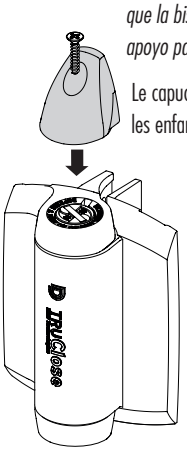

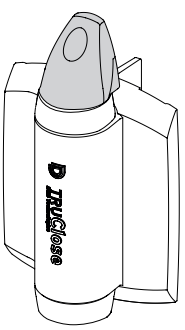

Regular - TCACAPS3
Heavy-Duty - TCHDCAPS3

KDC - Approved Building Consent Document - BC210441 - Pg 132 of 336 - 30/08/2021 - ComplyNZ

TRUClose®

Maintenance Requirements

Note: The hinges will operate properly, and warranty is valid, only if installed in accordance with the instructions and specifications shown herein.

- Use only two (2) TruClose hinges on any one gate.
- Remove all other types of hinges and self-closing devices.
- Each hinge must have equal tension at all times.
- Ensure the gate does not swing through the line of the fence. Use a "gate stop" or a latch (with striker) to prevent this.
- Do not lubricate these hinges with petroleum-based lubricants at any time. Use only powdered graphite.
- Ensure the hinges are kept free of sand, ice and other debris that could impair effective operation.
- Do not disassemble these hinges at any time.
- Do not paint or apply an additional finish to the hinges.
- Never remove hinges from gate until spring tension is released.
- Do not physically cut, drill, countersink, machine or grind any part of the hinge leaves.

For a downloadable Adobe Acrobat (PDF) version of our Limited LIFETIME WARRANTY, go to our website at www.ddtechglobal.com

Requisitos de mantenimiento

Observación: Las bisagras funcionarán correctamente y la garantía será válida únicamente si su instalación se realiza de acuerdo con las instrucciones y especificaciones aquí descritas.

- Usar únicamente dos (2) bisagras TruClose por puerta.
- Retirar cualquier otro tipo de bisagra existente y aparatos de autocierre.
- Cada bisagra deberá tener la misma tensión en todo momento.
- Asegurarse de que la puerta no se balancee a través de la línea de la cerca. Usar un tope para puertas o cerrojo (con cerradura hembra) para evitar que esto ocurra.
- No lubricar estas bisagras con lubricantes a base de petróleo, en ningún momento. Usar únicamente grafito en polvo.
- Asegurarse de mantener las bisagras sin arena, hielo ni ningún otro tipo de escombro que podría dificultar la efectividad de la operación.
- No desarmar estas bisagras en ningún momento.
- No pintar ni aplicar acabados sobre estas bisagras.
- No retirar nunca las bisagras de la puerta hasta que se suelte la tensión del resorte.
- No cortar, perforar, hacer un avellanado, usar una máquina ni esmerilar físicamente ninguna parte de las hojas de las bisagras.
- Por razones de seguridad, retirar los pernos o tornillos sobresalientes después de la instalación mediante su corte, esmerilado o limado.

Para un version de nuestra garantia limitada de por vida descargable en Adobe Acrobat (pdf), vaya a nuestro sitio Web en www.ddtechglobal.com

Exigences d'entretien

Remarque : Les charnières fonctionnent correctement, et la garantie est valide, seulement si elles sont installées en accord avec les instructions et spécifications décrites ici.

- Utilisez uniquement deux (2) charnières TruClose sur chaque portillon.
- Retirez tout autre type de charnière ou dispositif de fermeture automatique.
- Chaque charnière doit avoir la même tension à tout instant.
- Assurez-vous que le portillon ne s'ouvre pas au-delà de la clôture. Utilisez un "butoir de portillon" ou un loquet (avec une gâche) pour éviter ceci.
- Ne graissez jamais ces charnières avec des lubrifiants à base de pétrole. Utilisez uniquement de la poussière de graphite.
- Assurez-vous qu'il n'y ait pas de sable, de glace ou d'autres débris dans les charnières qui pourraient en affecter le fonctionnement.
- Ne démontez pas ces charnières pour le moment.
- Ne peignez pas ou appliquez de revêtement aux charnières.
- Enlevez les charnières du portillon seulement s'il n'y a pas de tension dans les ressorts.
- Aucune partie des paumelles de la charnière ne devrait être coupée, percée, fraisée, usinée, ou meulée.
- Pour des raisons de sûreté, retirez les écrous et vis qui dépassent suite à l'installation en les coupant, et/ou en les limant.

Pour obtenir une version Adobe Acrobat (PDF) téléchargeable de notre GARANTIE À VIE limitée, visitez notre site Web à www.ddtechglobal.com

HINGE RANGE	Maximum Self-Closing Weight	Maximum Gate Dimensions
REGULAR RANGE	66lb (30kg) per pair	*5'Hx3'W (1524x915mm)
HEAVY DUTY RANGE	154lb (70kg) per pair	*6'Hx4'W (1830x1220mm)

**Always space the hinges as far apart from each other as possible for maximum holding strength.*

GRADO DE ABERTURA DE LA BISAGRA autocierre	*Peso máximo de la puerta*	*Dimensiones máximas de*
VARIACIÓN REGULAR	*66lb (30kg) por par*	**5'Hx3'W (1524x915mm)*
GRADO DE ABERTURA REFORZADO	*154lb (70kg) por par*	**6'Hx4'W (1830x1220mm)*

**Siempre separar las bisagras lo más posible una de otra para obtener la máxima resistencia de sostenimiento.*

RAYON DE LA CHARNIÈRE	Poids maximum pour fermeture automatique	Dimensions maximums du portillon
RAYON NORMAL	30 kg (66 livres) par paire	*5'Hx3'W (1524x915mm)
RAYON POUR PORTILLON LOURD	70 kg (154 livres) par paire	*6'Hx4'W (1830x1220mm)

**Espacer toujours les charnières le plus possible l'une de l'autre pour obtenir le meilleur support.*

QUICK & EASY TENSION ADJUSTMENT!

1 - Depress
2 - Turn
3 - Release

AJUSTE DE TENSIÓN RÁPIDO Y FÁCIL

1 - Presionar
2 - Girar
3 - Suelte

RÉGLAGE RAPIDE ET FACILE DE LA TENSION !

1 - Appuyer
2 - Tourner
3 - Relâcher

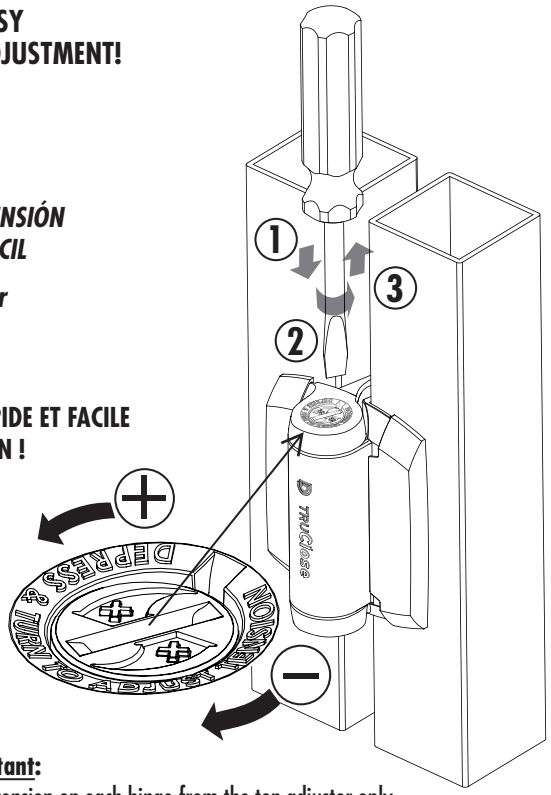

Important:
Adjust tension on each hinge from the top adjustor only

Importante:
Ajustar la tensión de cada bisagra desde la parte superior únicamente

Important :
Régler la tension sur chaque charnière uniquement à partir du haut.

KIG Approved Buyer Consent Document - 30/08/2022 - Ref: BC2044 - Supply of Hinges

D&D Technologies
Hi-Performance Hardware

AUSTRALIA: Unit 6, 4-6 Aquatic Dr, Frenchs Forest NSW 2086
USA: 7731 Woodwind Drive, Huntington Beach, CA 92647
EUROPE: Niasstraat 1, 3531 WR Utrecht, The Netherlands.

www.ddtechglobal.com

Installation Instructions
Procedimientos de instalación
Instructions d'installation

MAGNALatch® **Series 3** **Top Pull model**

D&D Technologies Hi-Performance Hardware

Always confirm and install this latch in accordance with your local fence barrier codes

Siempre confirmar e instalar este cerrojo de acuerdo con sus códigos locales para la barrera de la cerca

Installez et vérifiez toujours l'installation de ce loquet en conformité avec les codes locaux pour les clôtures

For pool gates 48" (1200mm) or higher

Para puertas para piscinas de 48" (1200mm) o más altas

Pour les portillons de piscine de 1,20 m (48 pouces) ou plus



KDC - Approved Building Consent Document - BC210441 - Pg 134 of 336 - 30/08/2021 - ComplyNZ

GAP VARIANCE
Diferencia de espacio
Écart d'espacement
1/2"–11/2" (13mm–38mm)

GATE FRAME
Marco de la puerta
Cadre de portillon

FENCE POST
Poste de cerca
Poteau de clôture

1 113/4" (300mm)

FENCE POST
Poste de cerca
Poteau de clôture

59" (1500mm)

Maximize distance between brackets

Maximizar la distancia entre los soportes

Espacez les supports au maximum

2 5/32" (4mm)

FENCE POST
Poste de cerca
Poteau de clôture

3

4 Position Striker Body onto bottom of latch

Colocar en posición la caja de la cerradura hembra en la base del cerrojo

Positionnez la barre de butée sur le bas du loquet

GATE FRAME
Marco de la puerta
Cadre de portillon

5 1/8" (3mm)

Align marks for proper vertical alignment

Alinear las marcas para la correcta posición vertical

Alignez les marques pour obtenir un bon alignement vertical

6 GATE FRAME
Marco de la puerta
Cadre de portillon

ADJUST

5/32" (4mm)

7 Fix screw 'B' at bottom

Fijar el tornillo 'B' en la base

Vissez la vis B sur le bas

8

9

Align marks for proper horizontal alignment

Alinear las marcas para la correcta posición horizontal

Alignez les marques pour obtenir un bon alignement horizontal

Installation Instructions
Procedimientos de instalación
Instructions d'installation

MAGNALatch® **Series 3**
Top Pull model

D&D Technologies
Hi-Performance Hardware

CAUTION: MagnaLatch provides vertical & horizontal adjustment for correct alignment. It is the installer's/owner's responsibility to ensure the gate properly latches at all times. See Steps 5 & 9.

PRECAUCIÓN: *MagnaLatch ofrece ajuste vertical y horizontal para una correcta alineación. Es responsabilidad del instalador/propietario asegurarse de que el pestillo de la puerta cierre correctamente en todo momento. Ver Pasos 5 y 9.*

ATTENTION : MagnaLatch permet un réglage vertical et horizontal pour obtenir un bon alignement. L'installateur/ propriétaire est responsable de garantir que le portillon se verrouille à chaque fois. Consultez les étapes 5 et 9.

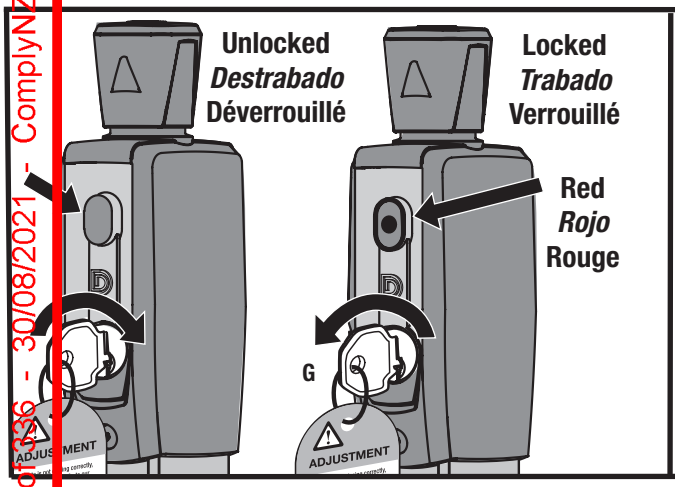

Key Tag supplied as reminder to maintain proper alignment

Placa para la llave suministrada para recordar que se debe mantener la alineación correcta

Étiquette de clé fournie pour rappeler l'importance d'un bon alignement

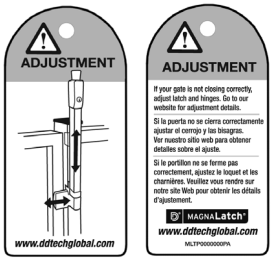

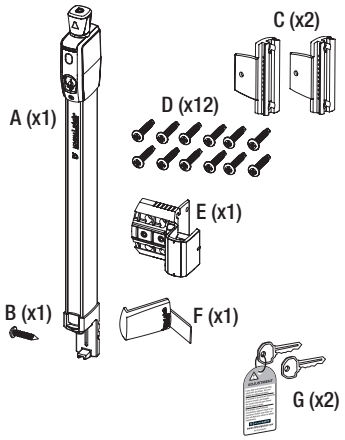

ENGLISH

Swimming pool fences, gates and latches cannot substitute for adult supervision.
If using this latch on a swimming pool gate, consult all appropriate local authorities for safety requirements.
The latch will operate properly only if installed and maintained in accordance with these instructions.

MAINTENANCE: REMOVE KEY FROM LOCK AFTER USE. Do not lubricate the latch with petroleum-based lubricants at any time; use only powdered graphite. Ensure all screws are tightened firmly and that the MagnaLatch® is kept free of sand, ice and other debris which could impair performance.

For a downloadable Adobe Acrobat (PDF) version of our Limited LIFETIME WARRANTY, go to our website at www.ddtechglobal.com

ESPANIOL

Las cercas, portones y pestillos de las piscinas no sirven como substituto de la supervisión por parte de adultos. Si se usa este pestillo en un portón de piscina, consulte a todas las autoridades locales correspondientes con respecto a los requisitos de seguridad. El pestillo funcionará debidamente sólo si se instala y mantiene de acuerdo a estas instrucciones.

MANTENIMIENTO: RETIRAR LA LLAVE DE LA CERRADURA DESPUÉS DE USAR.
No lubricar el cerrojo con lubricantes a base de petróleo en ningún momento; usar grafito en polvo únicamente. Asegurarse de que todos los tornillos se encuentren firmemente ajustados y que MagnaLatch® no contenga arena, hielo ni otros desechos que podrían impedir su funcionamiento.

Para bajar una versión en Adobe Acrobat (PDF) de nuestar GARANTÍA DE POR VIDA limitada dirigirse a nuestro sitio web www.ddtechglobal.com

FRANCAIS

La protection apportée par les barrières de piscine, portillons et autres serrures ne remplace en aucun cas la surveillance exercée par un adulte. Si vous désirez installer cette serrure sur le portillon d'une barrière de piscine, renseignez-vous sur les exigences de sécurité auprès des autorités locales concernées. Le bon fonctionnement de la serrure dépend uniquement d'une installation et d'une maintenance conformes aux présentes instructions.

ENTRETIEN : RETIREZ LA CLÉ DU VERROU APRÈS UTILISATION. Ne lubrifiez jamais le loquet avec des lubrifiants à base de pétrole, utilisez uniquement de la poudre de graphite. Assurez-vous que toutes les vis sont bien serrées et que le MagnaLatch® n'est pas couvert de sable, glace, ou de tout autre débris qui pourrait nuire à son fonctionnement.

Visitez notre site web à l'adresse www.ddtechglobal.com pour obtenir une version téléchargeable au format Adobe Acrobat (PDF) de notre GARANTIE À VIE limitée.

FRANCAIS (Europe only)

CONSEIL DE SÉCURITÉ

A lire attentivement et à conserver pour une consultation ultérieure
- La piscine peut constituer un danger grave pour vos enfants. Une noyade est très vite arrivée. Des enfants près d'une piscine réclament votre constante vigilance et votre surveillance active, même s'ils savent nager.
- Une barrière ne se substitue pas au bon sens ni à la responsabilité individuelle. Elle n'a pas pour but non plus de se substituer à la vigilance des adultes responsables qui reste le facteur essentiel pour la protection des jeunes enfants.
- Attention ! la sécurité n'est assurée qu'avec le moyen d'accès fermé, verrouillé.
- Le moyen d'accès doit être systématiquement fermé en cas d'absence, même momentanée du domicile.
- Prendre toutes les mesures afin d'empêcher l'accès du bassin aux jeunes enfants et ce, jusqu'à la réparation de la barrière ou du moyen d'accès lors d'un constat de dysfonctionnement ou lors du démontage de la barrière empêchant la sécurisation du bassin.
- La présence d'un parent et / ou d'un adulte responsable est indispensable lorsque le bassin est ouvert.
- Vérifier l'absence d'objet à proximité de la barrière pouvant inciter ou faciliter l'escalade de la barrière.
- La fermeture du moyen d'accès pour les systèmes à fermeture automatique doit être systématiquement vérifiée.
- Apprenez les gestes qui sauvent
- Mémoriser et afficher près de la piscine les numéros des premiers secours :
• Pompiers (18 pour la France)
• SAMU (15 pour la France)
• Centre antipoison

D&D Technologies
Hi-Performance Hardware

AUSTRALIA: Unit 6, 4-6 Aquatic Dr, Frenchs Forest NSW 2086
USA: 7731 Woodwind Drive, Huntington Beach, CA 92647
EUROPE: Niasstraat 1, 3531 WR Utrecht, The Netherlands.

www.ddtechglobal.com

KDC - Approved Building Consent Document BC241411 - Pg 135 of 336 - 30/08/2021 - ComplyNZ

19 July 2021

KDC - Approved Building Consent Document - BC210441 - Pg 136 of 336 - 30/08/2021 - ComplyNZ

Client: Linda & David Kendall
linda.kendall@xtra.co.nz

WGL 21076

On-site 'secondary' wastewater treatment / disposal system for a four-bedroom house at Lot 81, The Sanctuary, Mangawhai.

Introduction

This document is to form part of building consent application for the construction of a four-bedroom house at Lot 81, The Sanctuary, Mangawhai. Lot 81 DP 556753 (5,901m^2). Title and floor plan attached.

This report outlines the design and technical specifications for the on-site wastewater treatment and disposal system and ensures the chosen wastewater system meets all the relevant requirements from the Proposed Regional Plan for Northland, section C.6.1 (PRPN), Kaipara District Council as outlined in AS/NZS 1547:2012 and G13/VM4 On-site disposal B2 (durability 15 years) of the NZ building code.

Site Assessment

Wiley Geotechnical Ltd (WGL) visited the site on and made the following observations:

Wiley Geotechnical Ltd (WGL) visited the site on the 14th of May 2021 and made the following observations:

- Lot 81 is part of a south to south east and east facing slope.
- A hand auger investigation was undertaken within a potentially suitable effluent field site adjacent to the eastern corner of the property. Slope is 8 degrees to the south and east.
- A culvert (dry) was observed at the top of the slope.
- No obvious signs of instability were noted.
- The proposed effluent field will be upslope from covenanted areas 'D' and 'A' and at least 15m above a wetland area within these covenanted areas.
- No evidence was seen or heard of the site being used for activities which could have led to site contamination.

Geological Investigation

The GNS geological unit QMAP shows the soils at the proposed site of the effluent field as being Pakiri Formation of the Waitemata Group. A geotechnical report for subdivision was undertaken by Hawthorn Geddes in August 2019. This report deems the soils to be very poorly drained clays, or Category 5 and a DiR of 2.8 mm/day. Our borehole investigation was consistent with this.

Design Recommendations

Re AS/NZS 1547:2012

KDC - Approved Building Consent Document - BC210441 - Pg 137 of 336 - 30/08/2021 - ComplyNZ

A four-bedroom house equates to a six-person occupancy, with roof collection of potable water and standard water fixtures installed in the house including an automatic washing machine daily effluent amounts to 180L/day/person (table H3). 6 x 180L = 1080L/day.

1080/day/2.8 = 386. **Effluent Field = 386m².**

The owner has decided to install a 'TXR-1' secondary wastewater system using a textile filtration system. The TXR-1 is manufactured and distributed by Duracrete in Whangarei. Maximum daily flow for a TXR-1 is 2000L/day the emergency storage is 1500L. The unit has three settings, 900L/day, 1200L/day and 1500L/day effluent flows, technical specifications and OSET results attached.

The effluent field is to be mole ploughed into the topsoil at a depth of at least 150mm. Where topsoil is less than 200mm extra topsoil will need to be added. A likely source of this extra topsoil is from the house excavation. Effluent field is to be at least 1.5m off any boundary, 15m from any water body/course and 5m from any stormwater flow path downslope of the effluent field. The effluent field is to be installed on slopes under 10^0.

A reserve area is required to be made available in case of effluent field failure, the minimum size to be 30% of the effluent field size. **Reserve = 386 x 0.3 = 116, reserve = 116 m².**

The culvert discharging at the top of the slope will need to be diverted away from the effluent field with the outlet at least 5m below the lowest dripper line. Hawthorn Geddes have a draft plan for this (see attached). This will also act as a surface water diversion drain, directing any stormwater coming from the road and slopes above the effluent field away from the effluent field.

As impervious area is under 10% then attenuation of stormwater is not required. Stormwater overflow from the rain water tanks to be taken to an in-ground dispersal trench, location to be below the lowest dripper line and at a point so as not to cause instability. Total roof area is 405.45m^2 so length of in-ground trench to be 18m, as per fig 21 attached.

Any runoff from driveways should preferably be evenly spread across adjacent grass or into a grassed swale drain so as to abstract heavy metals and other pollutants before entering a watercourse. Piped discharge directly into a watercourse is not accepted these days as it adds to risk of pollution and to peak flood flow and scour of stream banks etc.

Key Environmental Effects

- **The Impact on ground-water *quantity*** from the system will be close to zero as no more water will arrive on the Lot as supply is roof-water, and effluent will be taken up by the grass on the effluent field and stimulate growth. Ground water *quality* will be protected by these taking up the nutrients (nitrates and phosphates) and by micro-organisms in the soil digesting any *e coli*.
- **The Impact on surface-water.** The amount of surface water run-off will be reduced by the increased vegetative growth. Some of the surface water will be taken up by the grass. The extra grass will provide a protective layer above the soils reducing erosion in times of heavy rainfall. The flow on effect is an improvement of **water quality** down-stream. Having some of the roof water applied to the effluent field on fine days will even out the application of water to the ground on the Lot, thereby tending to reduce peak flows to ground. This is a desirable effect.
- **The Impact on soils.** The effect on the soils will be beneficial as the nutrients will not only promote plant growth but also increase the micro-biological activity in the soils themselves and slowly convert any inorganic clays to organics. The topsoil depth will therefore increase over the years as the subsoils become more organic. Less topsoil can be washed away by heavy rain as it is protected by the increased grass growth. The soils will benefit from the aeration from the installation of the dripper lines.

KDC - Approved Building Consent Document - BC210441 - Pg 138 of 336 - 30/08/2021 - ComplyNZ

- **The Impact on <u>Amenity Values.</u>** The effects to flora will be positive in that the adjacent trees will get added nutrients and moisture. The effects on fauna will also be positive in that the boosted tree and grass growth will provide a habitat attractive to birds, insects and people. Not only will this support local diversity, it will create a more pleasantly aesthetic setting for residents and neighbours.

Mitigation Measures

- **Potential odour and noise**
  When the irrigation pump operates a very small noise can be heard as the effluent fills the dripper lines. The sound is negligible. When operating correctly the system is odorless.

- **Measures to protect against system failure**
  In the case of a mechanical failure, a high-level float is installed in the irrigation chamber with a visible alarm on the control box. This will allow plenty of time to rectify any faults with plenty of emergency storage available (1500L). In the case of a dripper line failure in the effluent field, a greater than 116m2 (30%) reserve area is available.

- **Maintenance plan**
  An annual service is recommended for all secondary wastewater systems. This is to be organized by the owner before COC is issued. The owner is also required to clean the 130 micron arkal filter every three months or so.

Items not to be flushed

- No bleaches or chlorine (i.e. Napisan – Bleach – Janola). These products are designed to kill bugs and will kill off the bacteria in the tank causing smells and constant blocking of the Bio (internal) filter. You can use these products if used in a bucket and tip on the lawn or safe place, not down your drain
- **No fats or oils down drains.** Fats and oils may block the tank filters and kill the bacteria in the tank.
- No tea leaves or coffee grounds down drains. These may block the filters in the tank and the external filter.
- No washing paint brushes or disposing of paints down drains. These products will not only kill bacteria in the tank, but the residue is very difficult and costly to remove.
- No disposable nappies, sanitary napkins, tampons or condoms. These products do not break down and cause a mass build up in the tank, and can cause blockages that can be costly to clean.
- Do not have a waste disposal unit. This waste takes a long time to break down and the system will require frequent emptying which is very costly.
- Use low sudsing laundry powder/liquid and non-caustic dish washing powder.

KDC - Approved Building Consent Document - BC210441 - Pg 139 of 336 - 30/08/2021 - ComplyNZ

Wastewater Summary for Drainlayer

1 Install a TXR-1 wastewater system approved to AS/NZS 1547:2012 standards, at least 3m away and downhill from the house.

2 Mole plough into the topsoil (at least 150mm deep) 386m^2 of pressure compensating drip irrigation line with an emitter flow rate of 1.6lph, 500mm dripper spacing and 1.0m spacing between laterals. At no point should the lines be closer than, 1.5m from any boundary or on slopes over 10^0, see wastewater site sketch for location.

3 Where the existing topsoil is under 200mm deep extra topsoil will need to be added. The topsoil from the house excavation a possible source.

4 System to be installed and maintained as per manufacturers recommendations, including regular de-sludging of the primary treatment tank and dripper line flush.

5 Once the system is operational obtain a commissioning statement from the drainlayer who installed it and send it to the supplier to obtain a warranty.

6 Stormwater overflow from the rain water tanks to be taken to an inground dispersal trench downslope and south west of the house. Length of in-ground trench to be 18m. Design as per fig C21 attached.

7 Ensure a service contract is in place.

I trust that this information meets your current requirements. Please do not hesitate to contact the undersigned on 09 421 5353 or cam@wileygeotechnical.co.nz if you require any further information.

Report prepared by:



Cameron Shaw

Wastewater Designer reg 3298



Matt Wiley, CPEng

Principal Engineer

KDC - Approved Building Consent Document - BC210441 - Pg 140 of 336 - 30/08/2021 - ComplyNZ

PROPOSED OPEN DRAIN TO DIVERT STORMWATER FROM ROBERT HASTIE DRIVE

DRAFT

THIS DRAWING WAS PRODUCED IN COLOUR. DO NOT USE FOR CONSTRUCTION PURPOSES IF THIS NOTE IS IN BLACK & WHITE

NOTE:
SITE INFORMATION ADAPTED FROM SURVEY DRAWING PROVIDED BY TERRA CONSULTANTS REFERENCE SC106;
ALL INFORMATION MUST BE CONFIRMED ON SITE;
TO BE READ IN CONJUNCTION WITH HAWTHORN GEDDES ENGINEERS & ARCHITECTS LTD REPORT REFERENCE 10737

Approximate position of headwall- construct outlet protection (grouted rock spalls) to direct flow into rock-lined drain

14.97m

Existing culvert under Robert Hastie Drive

Construct approx 80m of rock-lined roadside drain.

outlet to wetland

LOT 81

LOT 82

N

USE WRITTEN DIMENSIONS. DO NOT SCALE FROM DRAWING.

© HAWTHORN GEDDES ENGINEERS & ARCHITECTS LTD (HGE&A)
THE COPYRIGHT OF THIS DRAWING IS THE PROPERTY OF HGE&A.
REPRODUCTION OF THIS DESIGN OR DRAWING IS NOT PERMITTED UNLESS PERMISSION IS OBTAINED FROM HGE&A.

Hawthorn Geddes
engineers & architects ltd

7 Selwyn Avenue
Whangarei 0110
Phone: 09 438 7139
hg@hgcs.co.nz

Unit 21a, The Grange
Warkworth 0910
Phone: 09 283 3428
www.hawthorngeddes.co.nz

CLIENT: SANCTUARY NORTH LTD

PROJECT: JOAL CONSTRUCTION & LAKEVIEW LANE WIDENING
97 & 71 ROBERT HASTIE DRIVE,MANGAWHAI

DRAWING: LOCALITY PLAN

REV.	REVISION DETAILS	BY	DATE
R1	ISSUED FOR ENGINEERIN[illegible] ANNING APPROVAL	MS	21/09/20

APPROVAL
DRAFT

SCALE @ A3: 1:500
PROJECT No.: 0737
SHEET:
REV.: R1

16/12/2020 3:05:23 PM K:\10737 Duck Trust Subdivision Suitability Lots 1 & 2 Robert Hastie Drive Mangawhai\Tender set & Engineering approval set\10737 200915 Engineering Approval Set.dwg

KDC - Approved Building Consent Document - BC210441 - Pg 141 of 336 - 30/08/2021 - ComplyNZ

Figure C21
Conceptual Layout of Flow Dispersal Trench

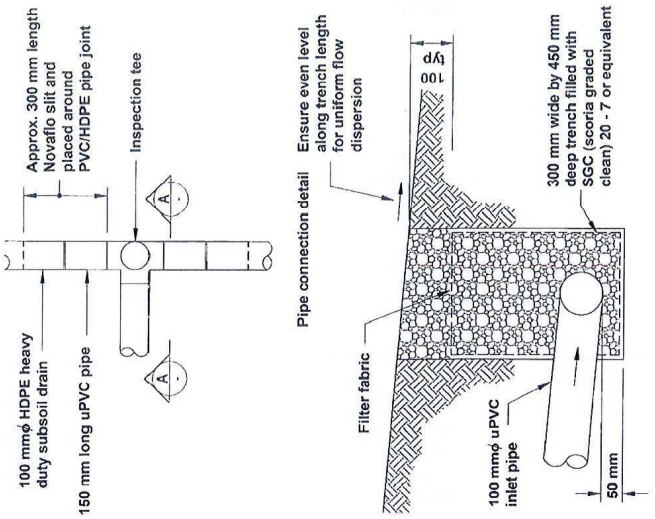

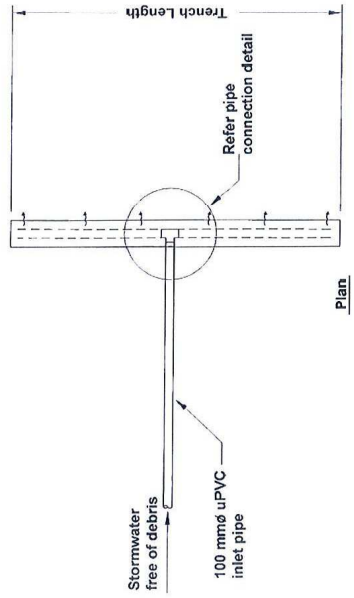

Plan

Keep dispersal trench 30 m clear of property boundary

Design Parameters

Effective catchment area drained (m^2)	Trench Length (m)
100	8
200	12
300	14
400	16
500	18
600	20

(Note: effective catchment area drained = impervious area + 0.72 x pervious area

Wiley Geotechnical Ltd

Client: Linda & David Kendall
linda.kendall@xtra.co.nz

WGL 21076

KDC - Approved Building Consent Document - BC210441 - Pg 142 of 336 - 30/08/2021 - ComplyNZ

On-site 'secondary' wastewater treatment / disposal system for a four-bedroom house at Lot 81, The Sanctuary, Mangawhai.

Wastewater Site Sketch

386m2 eff field. To be mole ploughed.

116m2 reserve area.



KAIPARA DISTRICT

Kaipara te Oranganui • Two Oceans Two Harbours

KAIPARA DISTRICT COUNCIL

KDC - Approved Building Consent Document - BC210441 - Pg 143 of 336 - 30/08/2021 - ComplyNZ

Producer Statement

Design: On-Site Effluent Disposal Systems (AS/NZS 1547:2012)

Issued by: Cameron Shaw ..... (approved qualified design professional)

To: Linda & David Kendall ..... (owner)

To be supplied to: Kaipara District Council.....

Property Location: Lot 81 'The Sanctuary', Mangawhai.
.....

.....

Lot 81 .....DP 556753.....Valuation Number.....

To Provide: Design an onsite effluent disposal system that will comply with the principles and procedures of AS/NZS 1547:2012 and provide a schedule to the owner for the system's maintenance.

The Design: Has been designed in accordance with Verification Method G13/VM4 On-Site Disposal and B2 (durability 15 years) of the Building Regulations 1992 in Compliance with the New Zealand

Building Code

As an independent approved design professional covered by a current policy of Professional Indemnity Insurance (Design) to a minimum value of $200,000, **I believe on reasonable grounds** that subject to:

1 Site verification – An Installation and commissioning report verifying the system and all components have been installed and operate in conformity with the design is required upon completion in accordance with 6.2.5.4, AS/NZS1547(2012).

2 The proposal All proprietary products met the performance requirements.
the proposed design will meet the re levant provisions of the Building Code and Northland Regional Council discharges rules.

☐ I understand and accept that Council may rely on this document, for the purposes of establishing compliance with the above building consent and that the content including the signature, whether electronic or not, is truly representative and authoritative of the information contained.

Cameron Shaw ..... Digitally signed by Cameron Shaw DN: C=US, E=csmangawhai@gmail.com, O=Wiley Geotechnical Ltd, OU=Wastewater Design, CN=Cameron Shaw Date: 2019.10.17 09:01:50+13'00' (Signature of approved design professional)

BSc, Approved WW designer ..... (Professional qualifications)

3298 ..... (Licence Number or professional Registration number)

Address Unit 4, 6 Molesworth Drive, Mangawhai
.....

.....

Telephone Number 09 4315353..... Fax Number .....

Cellphone ..... Date 31/05/2021.....

KAIPARA DISTRICT

Kaipara te Oranganui • Two Oceans Two Harbours

KAIPARA DISTRICT COUNCIL

KDC - Approved Building Consent Document - BC210441 - Pg 144 of 336 - 30/08/2021 - ComplyNZ

Note: This form is to accompany every application for a Building Consent incorporating AS/NZS 1547:2012 Approval as a design professional is at Council's discretion.

Kaipara District Council

AS/NZS 1547:2012

On-site Wastewater Disposal Site and Soil Evaluation

KAIPARA DISTRICT

KDC - Approved Building Consent Document - BC210441 - Pg 145 of 336 - 30/08/2021 - ComplyNZ

Part A: Owners Details

1 Applicant Details:

Applicant Name	Linda & David Kendall	
Company Name		
	First Name(s)	Surname
Property Owner Name(s)	ACDL trustee Ltd	
Nature of Applicant*	Director	

*(*i.e. Owner, Leaser, Prospective Purchaser, Developer)*

2 Consultant / Site Evaluator Details:

Consultant/Agent Name				
Site Evaluator Name	Cameron Shaw			
Postal Address	Unit 6, 4 Molesworth drive Mangawhai			
Telephone Number	Business	094315353	Private	
	Mobile		Fax	
Name of Contact Person				
E-mail Address	cam@wileygeotechnical.co.nz			

3 Are there any previous existing discharge consents relating to this proposal or other waste discharge on this site?

Yes		No	✔	Please tick
If yes, give reference numbers and description				

KAIPARA DISTRICT

KDC - Approved Building Consent Document - BC210441 - Pg 146 of 336 - 30/08/2021 - ComplyNZ

4 List any other consent in relation to this proposal site and indicate whether or not they have been applied for or granted

If so, specify Application Details and Consent N°.

(E.g. Land Use, Water Take, Subdivision, Earthworks Stormwater Consent)

Part B: Property Details

1 Location Details

Physical Address of Property	Lot 81, The Sanctuary, Mangawhai.
Territorial Local Authority	**Kaipara District Council**
Regional Council	**Northland Regional Council**
Legal Status of Activity	Permitted: ✔ Controlled: ☐ Discretionary: ☐
Relevant Regional Rule(s)	Proposed Regional Plan for Northland, section C.6.1
Total Property Area (m²)	5,901 m2
Map Grid Reference of Property if Known	36 04 38.11S 174 34 02.10E

2 Legal description of land (as shown on Certificate of Title)

Lot N°	81	DP N°	556753	CT N°	
Other (specify)					

Please ensure copy of Certificate of Title is attached.

KAIPARA DISTRICT

Part C: On-Site Evaluation

(Refer AS/NZS 1547:2012 See Appendix D)

KDC - Approved Building Consent Document - BC210441 - Pg 147 of 336 - 30/08/2021 - ComplyNZ

Has a relevant property history study been conducted?

Yes		No	✓

(Please tick one)

If yes, please specify the findings of the history study, and if not please specify why this was not considered necessary.

would have been covered in hawthorn and geddes subdivision report.

job 4819 H & G 7/7/2008

1 Has a Slope Stability Assessment been carried out on the property?

Yes		No	✓

If **No**, why not?

effluent field on moderate slopes

Please tick

If **Yes**, please give details of report (if possible, please attach report):

Author	
Company/Agency	
Date of Report	
Brief Description of Report Findings:	

KAIPARA DISTRICT

KDC - Approved Building Consent Document - BC210441 - Pg 148 of 336 - 30/08/2021 - ComplyNZ

2 Site Information (See Table 1 attached):

Provide descriptive details below:
Performance of Adjacent Systems: secondary
Estimated Rainfall and Seasonal Variation:
Information available from **N.I.W.A MET RESEARCH**
Vegetation / Tree Cover: grass
Slope Shape: (Please provide diagrams) waxing plannar
Slope Angle: 8 degrees max
Surface Water Drainage Characteristics: downhill to South and east.
Flooding Potential: Yes ☐ / No ☐
If **Yes**, specify relevant flood levels on appended site plan i.e. one in five years and/or 20 year and/or 100 year return period flood level, relative to disposal area.
Surface Water Separation: 20m to wetland
Site Characteristics: or any other limitation influencing factors proximity to boundary.

3 Site Geology Check Rock Maps

Pakiri Formation of the Waitemata Group	
Geological Map Reference Number	NZL GNS

4 What Aspect(s) does the proposed disposal system face? (please tick)

North	☐	**West**	☐
North-West	☐	**South-West**	☐
North-East	☐	**South-East**	✓
East	✓	**South**	☐

KAIPARA DISTRICT

KDC - Approved Building Consent Document - BC210441 - Pg 149 of 336 - 30/08/2021 - ComplyNZ

5 Site clearances (Indicate on site plan where relevant)

Separation Distance from	Proposed Clearances (m)	Septic Tank Treated Allowed(KDC+	Secondary Treated Allowed (KDC+NRC)
Boundaries	1.5	1.5 m	1.5 m
Surface water (i.e. permanent or intermittently flowing rivers, creeks,	20m		15m
Groundwater Bores horizontal distance	NA	20 m	20 m
Subsurface water vertical separation	>1.2		
Embankments/retaining walls	NA	1.5 m	1.5 m
Other			
Reserve area set aside	30%	100 %	30 %

Part D: Site Assessment - Subsoil Investigation

(Refer AS/NZS 1547:2012 clause D2, Appendix D Site-and-Soil for Individual Lots

1 Please identify the soil profile determination method:

Test Pit		(Depth_____m)	Nº of Test Pits	
Bore Hole	1	(Depth_____m)	Nº of Bore Holes	1
Other (specify):				

Soil Report attached?

Yes	✔	No	

Please tick

2 Was fill material intercepted during the subsoil investigation?

Yes		No	

Please tick

If yes, please specify the effect of the fill on wastewater disposal

KAIPARA DISTRICT

KDC - Approved Building Consent Document - BC210441 - Pg 150 of 336 - 30/08/2021 - ComplyNZ

3 Percolation testing (Soil Permeability) (Recommended for conventional trenches in all clay soils)

Please specify the method (refer to Appendix G AS/NZS 1547:2012					
Test Report Attached?	Yes		No		Please tick

4 Are surface water interception/diversion drains required?

Yes	✔	No		Please tick

If yes, please show on site plan

4a Are subsurface drains required

Yes		No		Please tick

If yes enter details

5 Please state the depth of the seasonal water table:

Winter	1.2	m	Measured	✔	Estimated	
Summer	>1.2	m	Measured		Estimated	✔

6 Are there any potential storm water short circuit paths?

Yes	✔	No		Please tick

If the answer is yes, please explain how these have been addressed
shallow surface water drain above effluent field

divert culvert

7 Estimated soil category *(Refer AS/NZS 1547:2012 (See E4.1 and Table E1)*

Is Topsoil Present? 5	If so, Topsoil Depth? 0.15 (m)

KAIPARA DISTRICT

KDC - Approved Building Consent Document - BC210441 - Pg 151 of 336 - 30/08/2021 - ComplyNZ

Classification	Properties	Tick One
Sand	Very little to no coherence, cannot be molded., single grains	☐
Loamy sand	Slightly coherence, give a short ribbon 5mm that breaks easy	☐
Sandy loam	Forms a cast but will not roll in a ball. Individual sand grains can be seen	☐
Fine sandy loam	As for Sandy loam. Individual sand grains cannot be seen	☐
Loam	As for Sandy loam. But cast feels spongy	☐
Silty loam	As for loams but not spongy. Very smooth and silky	☐
Sandy clay loam	Can be rolled into a ball. Sand grains can be felt	☐
Fine sandy clay Loam	As for sandy clay loam but no sand grains visible	☐
Clay loam	Can be rolled into a ball with spongy feel, slightly plastic	☐
Silty clay loam	As for clay loams but not very spongy. Very smooth and silky	☐
Sandy clay	Forms a plastic ball in which sand grains can be seen, felt and heard	☐
Light clay	Smooth plastic ball that can be rolled into a rod. Slight resistance to shearing	✓
Silty clay	As for light clay but very smooth and silky	✓
Medium clay	Smooth plastic ball like plasticine. Can be moulded. Some resistance to ribboning	☐
Heavy clay	Smooth plastic ball like plasticine. Can be moulded. Firm resistance to ribboning	☐

Reasons for placing in stated category

Geotechnical report conducted by Hawthorn Geddes in August 2019. report 4819, 7/7/2008

PART E: Discharge Details

1 Water supply source for the property (please tick):

Rainwater (roof collection)	✓
Bore/well	☐
Public supply	☐

KAIPARA DISTRICT

KDC - Approved Building Consent Document - BC210441 - Pg 152 of 336 - 30/08/2021 - ComplyNZ

2 Calculate the maximum daily volume of wastewater to be discharged, unless accurate water meter readings are available

(Refer AS/NZS 1547:2012 See 5.5.5 and Appendix L, M and N

Number of Bedrooms	1 - 2 - 3 - 4 - 5 - 6			4
Design Occupancy	6			(Number of People)
Per capita Wastewater Production	140	160	180	(tick) (Litres per person per day)
Other - specify	200	220	180	
Total Daily Wastewater Production	1080			(litres per day)

3 Do any special conditions apply regarding water saving devices

A) Full water Conservation Devices?	Yes	☐	No	☑	Please tick
b) Water Recycling – what %?	%	☐	No	☐	Please tick

If you have answered yes, please state what conditions apply and include the estimated reduction in water usage.

Standard water fixtures including an automatic washing machine.(H3) 180L/day/person

4 Is Daily Wastewater Discharge Volume more than 3000 litres per day:

Yes	☐	Please tick
No	☑	Please tick

Note if answer to the above is yes, an N.R.C wastewater discharge permit will be required

KAIPARA DISTRICT

KDC - Approved Building Consent Document - BC210441 - Pg 153 of 336 - 30/08/2021 - ComplyNZ

PART F: Primary Treatment

(Please also refer to NRC rules)

1 **Please indicate below the no. and capacity (litres) of all septic tanks including type (single/dual chamber grease traps) to be installed or currently existing: If not 4500 litre dual chamber, explain why not.**

Number of Tanks	Type of Tank	Capacity of Tank (Litres)
	Total Capacity	

2 **Type of Septic Tank Outlet Filter to be installed?**

(min 3.5mm screen required see NRC rules)

Azud 130 micron final filter

PART G: Secondary and Tertiary Treatment

(Please also refer to NRC rules)

1 **Will the discharge effluent have a 5-day biochemical oxygen demand (BOD5) that is less than or equal to 30 grams per cubic metre and the total suspended solids (TSS) concentration that that is less than or equal to 45 grams per cubic metre?**

(Manufacturers specifications required see NRC rules)

Yes	☐	No	☐	(Please tick)	No means this is considered a primary system

KDC - Approved Building Consent Document - BC210441 - Pg 154 of 336 - 30/08/2021 - ComplyNZ

2 Please indicate the type of additional treatment, if any, proposed to be installed in the system: (please tick)

Secondary Treatment	✔		
Home aeration plant			
Commercial aeration plant			
Intermediate sand filter			
Recirculating sand filter			
Recirculating textile filter	✔		
Clarification tank	✔		
Tertiary Treatment			
Ultraviolet disinfection			
Chlorination			
Other		Specify	

PART H: Land Disposal Method

(Refer AS/NZS 1547:2012 appendices L, M and N)

1 Please indicate the proposed loading method: (please tick)

Gravity	
Dosing Siphon	
Pump	✔

2 High water level alarm to be installed in pump chamber(s)

Yes	✔	No	

If not to be installed, explain why.

3 If a pump is being used, please provide the following information:

Total Design Head	32	(m)
Pump Chamber Volume	700	(Litres)
Emergency Storage Volume	1500	(Litres)

KDC - Approved Building Consent Document - BC210441 - Pg 155 of 336 - 30/08/2021 - ComplyNZ

4 Please identify the type(s) of land disposal method (land application systems) proposed for this site: (please tick)

(Refer AS/NZS 1547:2012 appendix K)

Surface Dripper Irrigation			
Sub-surface Dripper irrigation	✓		
Standard Trench			
Deep Trench			
Mound			
Evapo-transpiration Beds			
Other		Specify	

5 Please identify the loading rate you propose for the option selected in the above, stating the reasons for selecting this loading rate:

(Refer to AS/NZS 1547:2012 appendix L)

Loading Rate 2.8mm/m2/day		(Litres/m2/day)
Disposal Area 502	Design 386	(m2)
	Reserve 116	(m2)

Explanation

6 (people)x 180L = 1080/2.8 = 386m2 eff field. 386 x 30% = 116m2 reserve area.

KAIPARA DISTRICT

KDC - Approved Building Consent Document - BC210441 - Pg 156 of 336 - 30/08/2021 - ComplyNZ

6 What is the available reserve wastewater disposal area?

Reserve Disposal Area (m²)	116m2
Percentage of Primary Disposal Area (%)	30

7 Please provide a detailed description of the design and dimensions of the disposal field and attach a detailed plan of the field relative to the property site:

Description and Dimensions of Disposal Field:

see wastewater site sketch

Plan Attached?	Yes	✓	No		Please tick

If not, explain why not

PART I: Maintenance & Management

(Please also refer to NRC rules)

1 Has a maintenance agreement been made with the treatment and disposal system suppliers?

Yes		No	✓	Please tick

Name of Suppliers

Duracrete.
owners responsibility to negotiate maintenance contract. Needed for warranty.

KAIPARA DISTRICT

KDC - Approved Building Consent Document - BC210441 - Pg 157 of 336 - 30/08/2021 - ComplyNZ

PART J: Assessment of Environmental Concerns

1 Is an assessment of environmental concerns included with application? *(Refer Fig 4.1C3)*

Yes	✔	No		Please tick

If Yes, list and explain possible effects

see attached

PART K: Is Your Application Complete?

1 Is a Northland Regional Council Discharge Consent Required?

Yes		No		Please tick

2 In order to provide a complete application you have remembered to:

Fully Complete this Assessment Form	yes
Include a *Location Plan* and *Site Plan* (with Scale Bars)	yes
Attach an Assessment of Environmental Concerns	yes

3 Declaration

☐ I understand and accept that Council may rely on this document, for the purposes of establishing compliance with the above building consent and that the content including the signature, whether electronic or not, is truly representative and authoritative of the information contained.

I hereby certify that, to the best of knowledge and belief, the information given in this application is true and complete.

Name	Matt Wiley	Signature	Matt Wiley Digitally signed by Matt Wiley DN: C=NZ, E=matt@wileygeotechnical.co.nz, OU=Wiley Geotechnical Ltd, CN=Matt Wiley Date: 2020.05.04 08:51:24+12'00'
Position	CPENG	Date	01 June 2021

Note:

Any alteration to the site plan or design after approval will result in non-compliance.

An Installation and commissioning report verifying the system and all components have been installed and operate in conformity with the design is required upon completion in accordance with 6.2.5.4, AS/NZS1547(2012)is required before the Code Compliance Certificate can be issued.

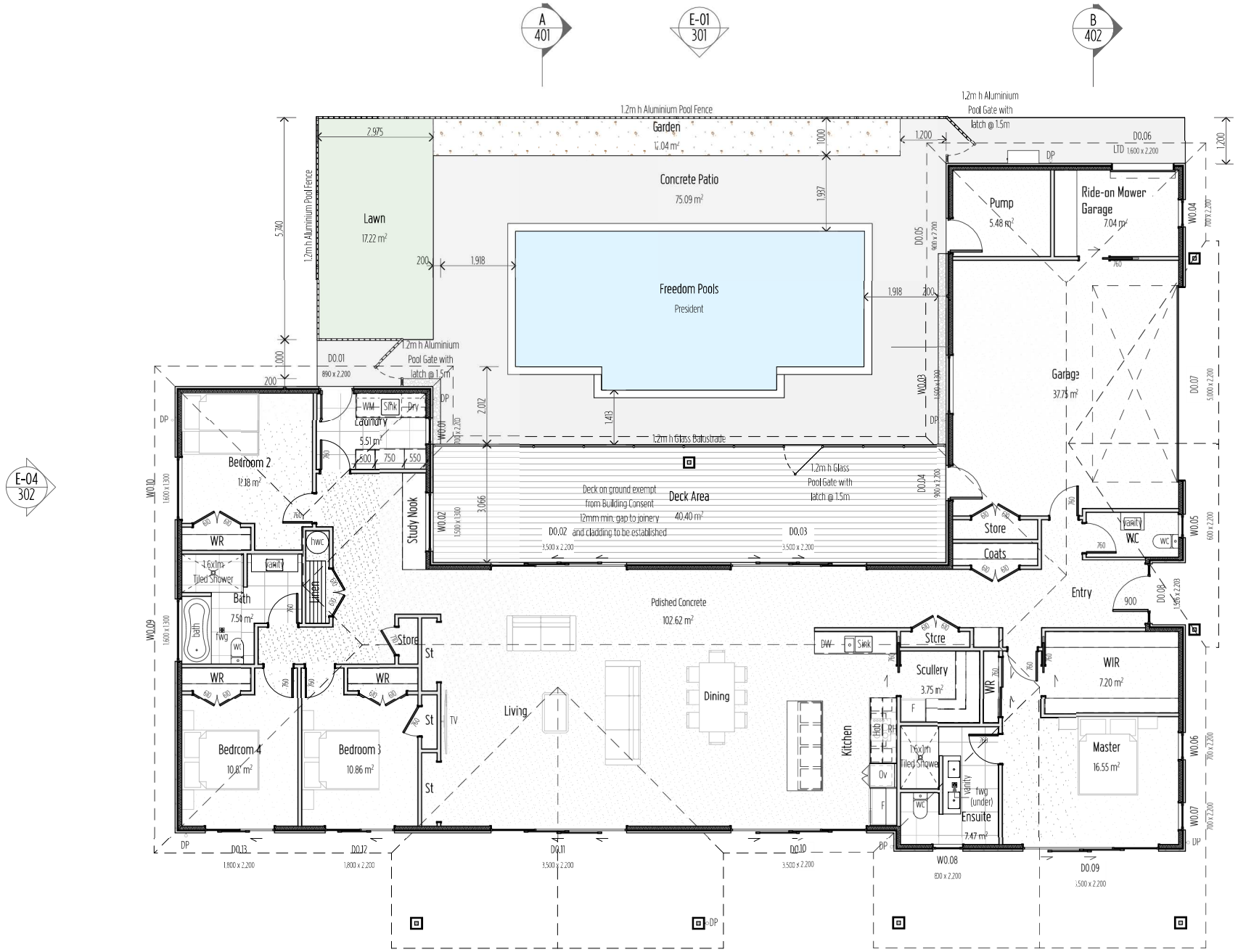

Key/Notes

- Insulated H1.2 SG8 wall framing
- Acoustic insulated H1.2 SG8 wall framing
- Un-insulated H1.2 SG8 wall framing

Waterproofing Membrane installed to entire bathroom/ensuite floor area with 2.1m upstand on walls 1.5m from corner of shower

All flooring tiles to a mean coefficient of friction no less than 0.4

Square stop to ceiling/wall junction

Internal shower glass to be safety glass

Main access deck to be in place for the final inspection, any steps to be max. 190mm riser and min. 280mm tread

Ground Floor Area over Framing
269.69 m²

Ground Floor Area over Cladding
277.25 m²

COASTAL HOMES

Project Title
Kendall

Site Address
Lot 81 The Sanctuary, Mangawhai

Drawing Issue
Building Consent

Sheet Title
Floor Plan

Scale	Drawn
1:100 @ A3	Marc R. Vale
Date	Checked
Work in Progress	CADetailer Ltd.
Drawing no.	Revision
201	02 - WIP

All dimensions to be verified on site before commencing any work or producing shop drawings. Do not scale.
The copyright of this drawing remains with CH Northland Ltd and CADetailer Ltd.

RevID	CNID	Change Name	Date
01			14/05/21
02 - WIP	01	Building Consent	Work in Progress

NOT FOR CONSTRUCTION

KDC - Approved Building Consent Document - BC210441 - Pg 158 of 336 - 30/08/2021 - ComplyNZ

KDC - Approved Building Consent Document - BC210441 - Pg 159 of 336 - 30/08/2021 - ComplyNZ

RECORD OF TITLE
UNDER LAND TRANSFER ACT 2017
FREEHOLD

Search Copy

R.W. Muir
Registrar-General
of Land

Identifier	**973221**
Land Registration District	**North Auckland**
Date Issued	23 February 2021

Prior References
731590

Estate	Fee Simple
Area	5903 square metres more or less
Legal Description	Lot 81 Deposited Plan 556753

Registered Owners
ACDL Trustee Limited

Estate	Fee Simple - 1/826 share
Area	96.8877 hectares more or less
Legal Description	Lot 100-103, 106, 200, 202 Deposited Plan 404128 and Lot 1 Deposited Plan 430128 and Lot 1 Deposited Plan 482523

Registered Owners
ACDL Trustee Limited

Interests

Subject to a water supply right over part Lot 100 DP 404128 marked B on DP 404128 specified in Easement Certificate 974832.2 - 19.5.1981 at 11.52 am

Appurtenant to the parts Lot 1 DP 482523 and Lot 202 DP 404128 formerly contained in NA133C/596 are rights of way specified in Easement Certificate C414433.4 - 17.9.1992 at 1:36 pm

Appurtenant to the parts Lot 1 DP 482523 and Lot 202 DP 404128 formerly contained in NA133C/596 are rights of way specified in Easement Certificate D549922.4 - 17.10.2000 at 10.22 am

The easements specified in Easement Certificate D549922.4 are subject to Section 351E (1) (a) Municipal Corporations Act 1954

Subject to a right to drain sewage over part Lot 1 DP 430128 marked BJ on DP 430128 created by Easement Instrument 8138731.3 - 20.10.2009 at 9:12 am

Appurtenant to Lot 100 DP 404128 herein is a right of way and appurtenant to Lot 1 DP 430128 herein is a right to convey stormwater created by Easement Instrument 8138731.3 - 20.10.2009 at 9:12 am

The easements created by Easement Instrument 8138731.3 are subject to Section 243 (a) Resource Management Act 1991

Subject to a right (in gross) to convey telecommunications and computer media over part Lot 200 DP 404128 marked BN and over part Lot 202 DP 404128 marked BP all on DP 404128 in favour of Telecom New Zealand Limited created by Easement Instrument 8138731.4 - 20.10.2009 at 9:12 am

The easements created by Easement Instrument 8138731.4 are subject to Section 243 (a) Resource Management Act 1991

Subject to a right (in gross) to convey electricity over part Lot 200 DP 404128 marked BN and over part Lot 202 DP 404128 marked BP all on DP 404128 in favour of Northpower Limited created by Easement Instrument 8138731.6 - 20.10.2009 at 9:12 am

Identifier **973221**

The easements created by Easement Instrument 8138731.6 are subject to Section 243 (a) Resource Management Act 1991

8138731.7 Conservation Covenant pursuant to Section 77 Reserves Act 1977 - 20.10.2009 at 9:12 am

8138731.8 Conservation Covenant pursuant to Section 77 Reserves Act 1977 - 20.10.2009 at 9:12 am

8509265.4 Consent Notice pursuant to Section 221 Resource Management Act 1991 - 6.7.2010 at 3:48 pm (affects Lots 100, 101 &103 DP 404128 and Lots 1 DP 430128 and Lot 81 DP 556753)

Land Covenant in Easement Instrument 8581297.2 - 17.2.2011 at 10:51 am

8581297.3 Encumbrance to The Sanctuary Residents Association Incorporated – 17.2.2011 at 10:51 am (Affects part Lot 1 DP 482523 formerly comprised in CT's 524301, 524302, 524303, 524306, 524308, 524309, 524312, 524315, 524316, 524318, 524328, 524335, 524342, 524343, 524346, 524349, 524351, 524298)

8581297.4 Encumbrance to The Sanctuary Residents Association Incorporated – 17.2.2011 at 10:51 am (Affects Lot 81 DP 556753, Lot 1 DP 430128 and Lot 100-103, 106, 200, 202 DP 404128 and part Lot 1 DP 482523 formerly comprised in CT's 517272, 524294, 524295, 524296, 524297, 524299, 524300, 524304, 524305, 524307, 524310, 524311, 524313, 524314, 524317, 524319, 524320, 524321, 524322, 524323, 524324, 524325, 524326, 524327, 524329, 524330, 524331, 524332, 524333, 524334, 524336, 524337, 524338, 524339, 524340, 524341, 524344, 524345, 524347, 524348, 524350)

Land Covenant in Easement Instrument 9542293.3 - 7.2.2014 at 12:23 pm (affects Lot 1 DP 482523)

12012486.1 Variation of Consent Notice 8509265.4 pursuant to Section 221(5) Resource Management Act 1991 - 23.2.2021 at 12:23 pm

Subject to Section 241(2) Resource Management Act 1991 (affects DP 556753)

12012486.3 Consent Notice pursuant to Section 221 Resource Management Act 1991 - 23.2.2021 at 12:23 pm(Affects Lot 81 DP 556753)

12012486.5 Conservation Covenant pursuant to Section 77 Reserves Act 1977 - 23.2.2021 at 12:23 pm (Affects Lot 81 DP 556753)

Land Covenant (in gross) in favour of The Santuary Residents Association Incorporated created by Covenant Instrument 12028708.1 - 26.3.2021 at 2:55 pm (Affects Lot 81 DP 556753)

KDC - Approved Building Consent Document - BC210441 - Pg 160 of 336 - 30/08/2021 - ComplyNZ

KDC - Approved Building Consent Document - BC210441 - Pg 161 of 336 - 30/08/2021 - ComplyNZ

CSD Plan - DP 556753

Survey Number	DP 556753
Surveyor Reference	93003 - Sanctuary Lot 2 S1&2
Surveyor	Stephen Thomas Dobbie
Survey Firm	Terra Group NZ Limited trading as Terra Consultants
Surveyor Declaration	I Stephen Thomas Dobbie, being a licensed cadastral surveyor, certify that: (a) this dataset provided by me and its related survey are accurate, correct and in accordance with the Cadastral Survey Act 2002 and the Rules for Cadastral Survey 2010, and (b)the survey was undertaken by me or under my personal direction. Declared on 22 Mar 2021 12:10 PM

Survey Details

Dataset Description	Lots 81-84, 91-94 & 101 being Subdivision of Lot 2 DP 430128		
Purpose	LT Subdivision		
Status	Deposited	**Type**	Survey
Land District	North Auckland	**Survey Class**	Class B
Meridional Circuit	Mount Eden 2000	**Vertical Datum**	None

Survey Dates

Surveyed Date	27/11/2020	**Certified Date**	22/03/2021
Submitted Date	22/03/2021 12:10:47	**Survey Approval Date**	22/03/2021
Deposit Date	23/02/2021		

Referenced Surveys

Survey Number	Land District	Bearing Correction
DP 404128	North Auckland	0°00'00"
DP 430128	North Auckland	0°00'00"

Territorial Authorities

Kaipara District

Comprised In

RT 781590

Created Parcels

Parcels	Parcel Intent	Area	RT Reference
Lot 81 Deposited Plan 556753	Fee Simple Title	0.5903 Ha	973221
Lot 82 Deposited Plan 556753	Fee Simple Title	1.0016 Ha	973222
Lot 83 Deposited Plan 556753	Fee Simple Title	1.4167 Ha	973223
Lot 84 Deposited Plan 556753	Fee Simple Title	0.7397 Ha	973224
Lot 91 Deposited Plan 556753	Fee Simple Title	0.8337 Ha	973225
Lot 92 Deposited Plan 556753	Fee Simple Title	1.2065 Ha	973226
Lot 93 Deposited Plan 556753	Fee Simple Title	1.1723 Ha	973227
Lot 94 Deposited Plan 556753	Fee Simple Title	1.0104 Ha	973228
Area A Deposited Plan 556753	Covenant - Land		
Area B Deposited Plan 556753	Covenant - Land		
Area C Deposited Plan 556753	Covenant - Land		

Landonline

Toitu te Land whenua Information New Zealand

CSD Plan - DP 556753

KDC - Approved Building Consent Document - BC210441 - Pg 162 of 336 - 30/08/2021 - ComplyNZ

Created Parcels

Parcels	Parcel Intent	Area	RT Reference
Area D Deposited Plan 556753	Covenant - Land		
Area E Deposited Plan 556753	Covenant - Land		
Area F Deposited Plan 556753	Covenant - Land		
Area G Deposited Plan 556753	Covenant - Land		
Area H Deposited Plan 556753	Covenant - Land		
Area I Deposited Plan 556753	Covenant - Land		
Area J Deposited Plan 556753	Covenant - Land		
Area K Deposited Plan 556753	Covenant - Land		
Area L Deposited Plan 556753	Covenant - Land		
Area M Deposited Plan 556753	Covenant - Land		
Lot 101 Deposited Plan 556753	Fee Simple Title	5.7268 Ha	973229
Area N Deposited Plan 556753	Covenant - Land		
Area O Deposited Plan 556753	Covenant - Land		
Area P Deposited Plan 556753	Covenant - Land		
Area Q Deposited Plan 556753	Covenant - Land		
Area R Deposited Plan 556753	Covenant - Land		
Area S Deposited Plan 556753	Covenant - Land		
Area T Deposited Plan 556753	Covenant - Land		
Area U Deposited Plan 556753	Covenant - Land		
Total Area		13.6980 Ha	

KDC - Approved Building Consent Document - BC210441 - Pg 163 of 336 - 30/08/2021 - ComplyNZ

Diag. AE

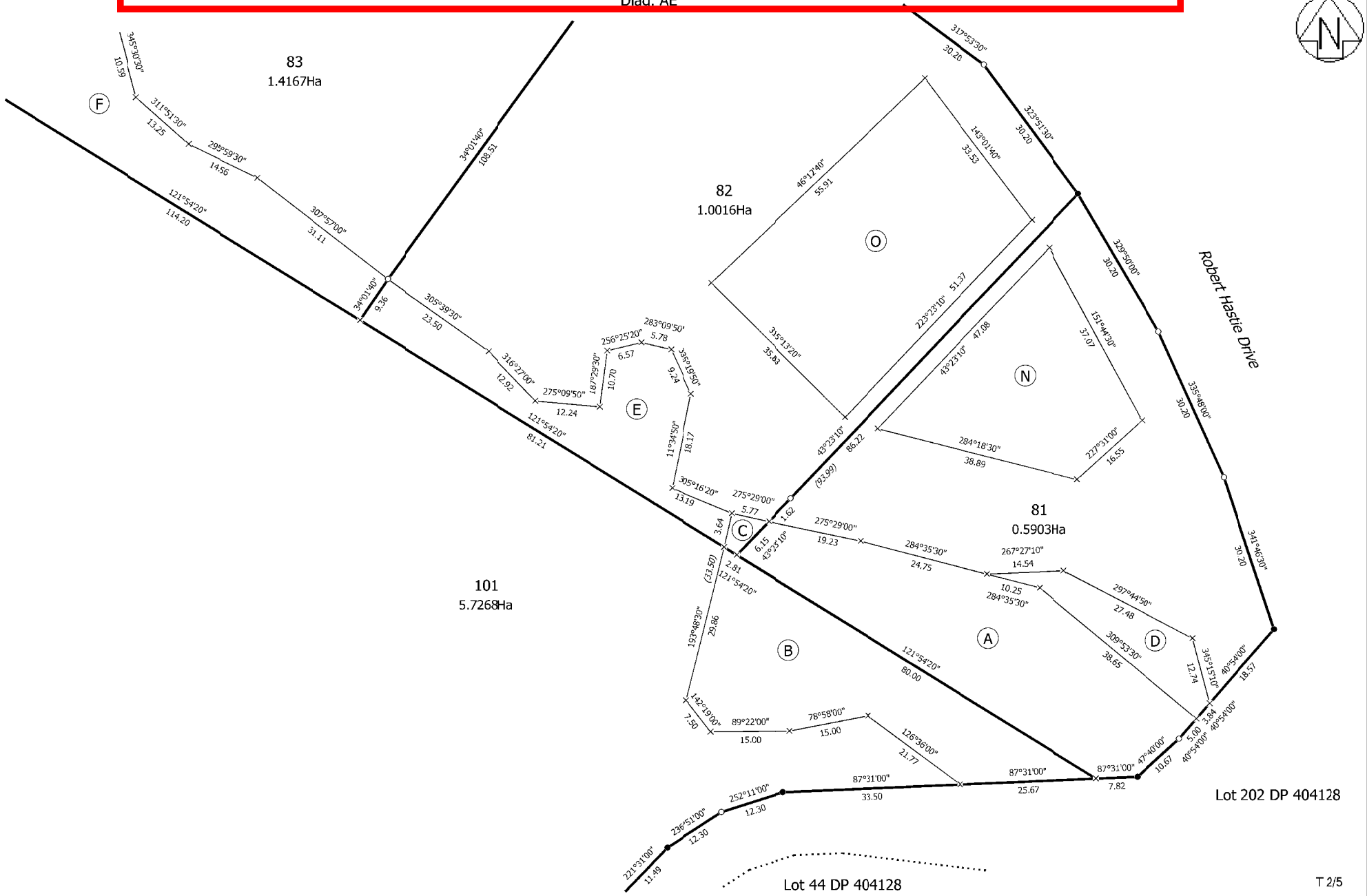

T 2/5

Land District: North Auckland Digitally Generated Plan Generated on: 24/03/2021 11:18am Page 22 of 25	Lots 81-84, 91-94 & 101 being Subdivision of Lot 2 DP 430128	Surveyor: Stephen Thomas Dobbie Firm: Terra Group NZ Limited trading as Te Survey Date: 27/11/2020	CSD Plan DP 556753 Deposited on: 23/02/2021

KDC - Approved Building Consent Document - BC210441 - Pg 164 of 336 - 30/08/2021 - ComplyNZ

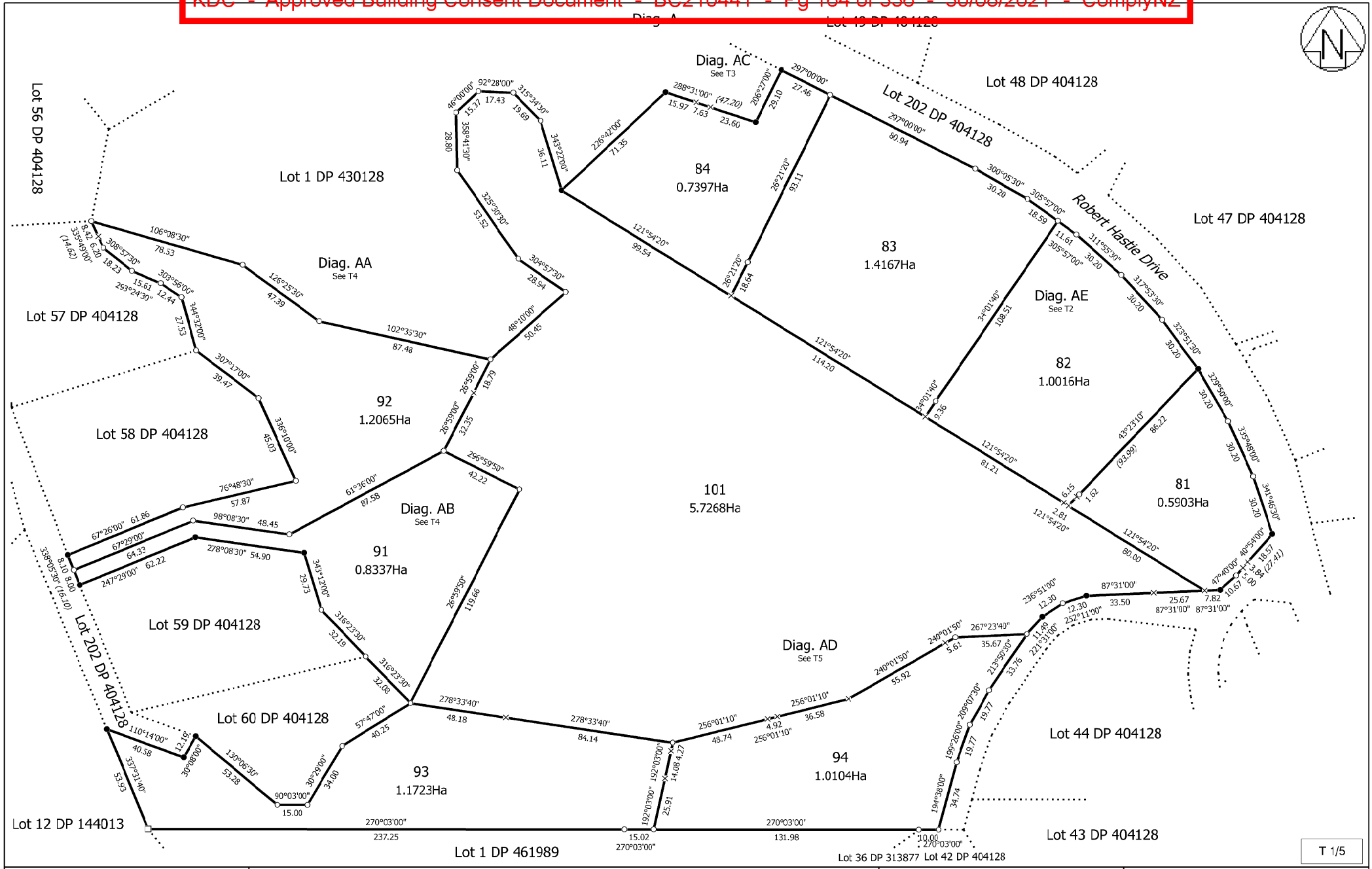

Land District: North Auckland Digitally Generated Plan Generated on: 22/03/2021 2:22pm Page 4 of 8	Lots 81-84, 91-94 & 101 being Subdivision of Lot 2 DP 430128	Surveyor: Stephen Thomas Dobbie Firm: Terra Group NZ Limited trading as Te	Title Plan LT 556753 Approved on: 22/03/2021

KDC - Approved Building Consent Document - BC210441 - Pg 165 of 336 - 30/08/2021 - ComplyNZ

On-site Effluent Treatment National Testing Programme (OSET NTP)

PERFORMANCE CERTIFICATE
CleanStream TXR-1 On-site Domestic Wastewater Treatment System, OSET NTP Trial 9, 2013/2014

System Tested

The **CleanStream TXR-1 system** is a packed bed recirculating textile filter wastewater treatment unit. The manufacturer's rated design capacity is 1,200 litres/day. Total liquid volume is 7,400 litres (primary treatment 2 tanks each with an effluent filter 3,700 and 1,200 litres; secondary treatment with packed bed 900 litres; recirculation tank 1,100 litres; pump chamber 700 litres). Emergency storage is 1,500 litres. No tertiary treatment (such as UV disinfection) is incorporated. The manufacturer's stated service frequency is annual.

Test Flow Rate

The **CleanStream TXR-1 system** was tested at 1,000 litres/day (equivalent to servicing a 3-bedroom 5 to 6 person household) over an 8 month (35 week) period November 2013 to July 2014 followed by a 1 month (4 week) high load effects test involving 5 days at 2,000 litres per day then 1,000 litres/day over the following 3 weeks.

Testing and Evaluation Procedures

A total of 37 treated effluent samples of organic matter (BOD_5) and suspended solids (TSS) at generally six day intervals during weeks 9 to 35 were tested and evaluated against the secondary effluent quality requirements of the joint Australia/NZ standard AS/NZS 1547:2012.

A total of 16 treated effluent samples of organic matter (BOD_5), total suspended solids (TSS), total nitrogen (TN), ammonia nitrogen (NH_4-N), total phosphorus (TP) and faecal coliforms (FC) at generally six day intervals during weeks 23 through 35 were tested and the results benchmarked and rated on their median values. In addition, the energy used by the treatment system was assessed on the mean of consumption levels over the benchmark period.

AS/NZS 1547:2012 Secondary Effluent Quality Requirements

These requirements are that 90% of all test samples must achieve a BOD_5 of $\leq$ 20 g/m^3 and TSS of $\leq$ 30 g/m^3 with no one result for BOD_5 being >30 g/m^3 and no one result for TSS being >45 g/m^3. The **CleanStream TXR-1 system achieved** a performance level of **100%** for BOD_5 and **100%** for TSS based on the full set of 37 test results in weeks 9 to 35, with no results exceeding the maximums. The **CleanStream TXR-1 system** thus **meets** the secondary effluent quality requirements of AS/NZS 1547:2012.

Benchmark Ratings

The **CleanStream TXR-1 system achieved** the following effluent quality ratings for the sixteen benchmarking results in weeks 20 to 35.

Indicator Parameters	Median	Std Dev	Rating	Rating System				
				A+	*A*	*B*	*C*	*D*
BOD (mg/L)	*2*	*1*	A+	*<5*	*<10*	*<20*	*<30*	*≥30*
TSS (mg/L)	*3*	*1*	A+	*<5*	*<10*	*<20*	*<30*	*≥30*
Total Nitrogen (mg/L)	*37.1*	*5*	D	*<5*	*<15*	*<25*	*<30*	*≥30*
NH_4- Nitrogen (mg/L)	*1.9*	*4*	A	*<1*	*<5*	*<10*	*<20*	*≥20*
Total phosphorus (mg/L)	*4.4*	*0.5*	B	*<1*	*<2*	*<5*	*<7*	*≥7*
Faecal Coliforms (cfu/100mL)	*65,000*	*100,000*	C	*<10*	*<200*	*<10,000*	*<100,000*	*≥100,000*
Energy (kWh/d) (mean)	*0.98*	*0.12*	A	*0*	*<1*	*<2*	*<5*	*≥5*

This Performance Certificate is specific to the **CleanStream TXR-1** model as specified above when operated at a flow rate of 1,000 litres/day, and is valid for 5 years from the date below. For the full OSET NTP report on the performance of the **CleanStream TXR-1 system** contact **Duracrete Products Ltd**, Kamo, Whangarei, Ph: 0800 387 227 Email:ric@duracrete.co.nz.

Authorised By:

Ray Hedgland, Technical Manager, OSET NTP
20 February 2015

On-site Effluent Treatment National Testing Programme, c/- Technical Manager, 2/12 Mt Blanc Pl, Northpark, Howick, AUCKLAND 2013 Mob: 021 626 772 E-mail: ray@hedgland.co.nz

KDC - Approved Building Consent Document - BC210441 - Pg 166 of 336 - 30/08/2021 - ComplyNZ

TECHNICAL INFORMATION – CLEANSTREAM TXR-1

The Cleanstream TXR-1 is a complete, one tank textile media treatment system. Its multi-chambered design consists of 2 septic stages, a textile filter stage and irrigation and recirculation stages.

- 8400 litre total capacity
- Emergency storage (without cross contamination - 3500 litres)
- Alarm system (to notify the homeowner of any faults)
- Comprehensive maintenance, 24 hour service





- The TXR-1 tank, roof and walls are constructed from galvanised steel reinforced concrete (70MPA at 28 days) and come with a manufacturer's warranty of 10 years. The mechanical components of the system also come with a 2 year warranty.
- The textile filter and recirculation stages are designed so that effluent is filtered multiple times through the textile media leading to much higher effluent quality than conventional aerobic systems.
- Separate septic stages mean there is always a working septic tank even after periods of non use, this allows the system to stay in a relatively active state.
- The system comes fully constructed, making installation a plug and play operation which provides for a faster turnaround while minimizing installation problems.
- Large emergency storage reduces problems during pump or power failure. The system has approximately 2.5 days of emergency capacity without cross contamination (based on typical flow through 1200L/day)

TREATMENT PERFORMANCE

12 monthly servicing is required to maintain efficient and effective treatment of household waste. This service must be performed by suitably trained personnel.

Expected treatment for medium size homes with daily flows up to 1500L is BOD5 4 mg/L, TSS 5 mg/L. However the system can treat up to 2000L per day whilst still complying with ARC TP58 effluent quality of BOD <15mg and TSS<15 mg/L for Advanced Secondary Treatment Systems – Packed Bed Reactors. Provision for 6 monthly service is required to achieve these larger daily flows.

KDC - Approved Building Consent Document - BC210441 - Pg 167 of 336 - 30/08/2021 - ComplyNZ

TREATMENT OVERVIEW

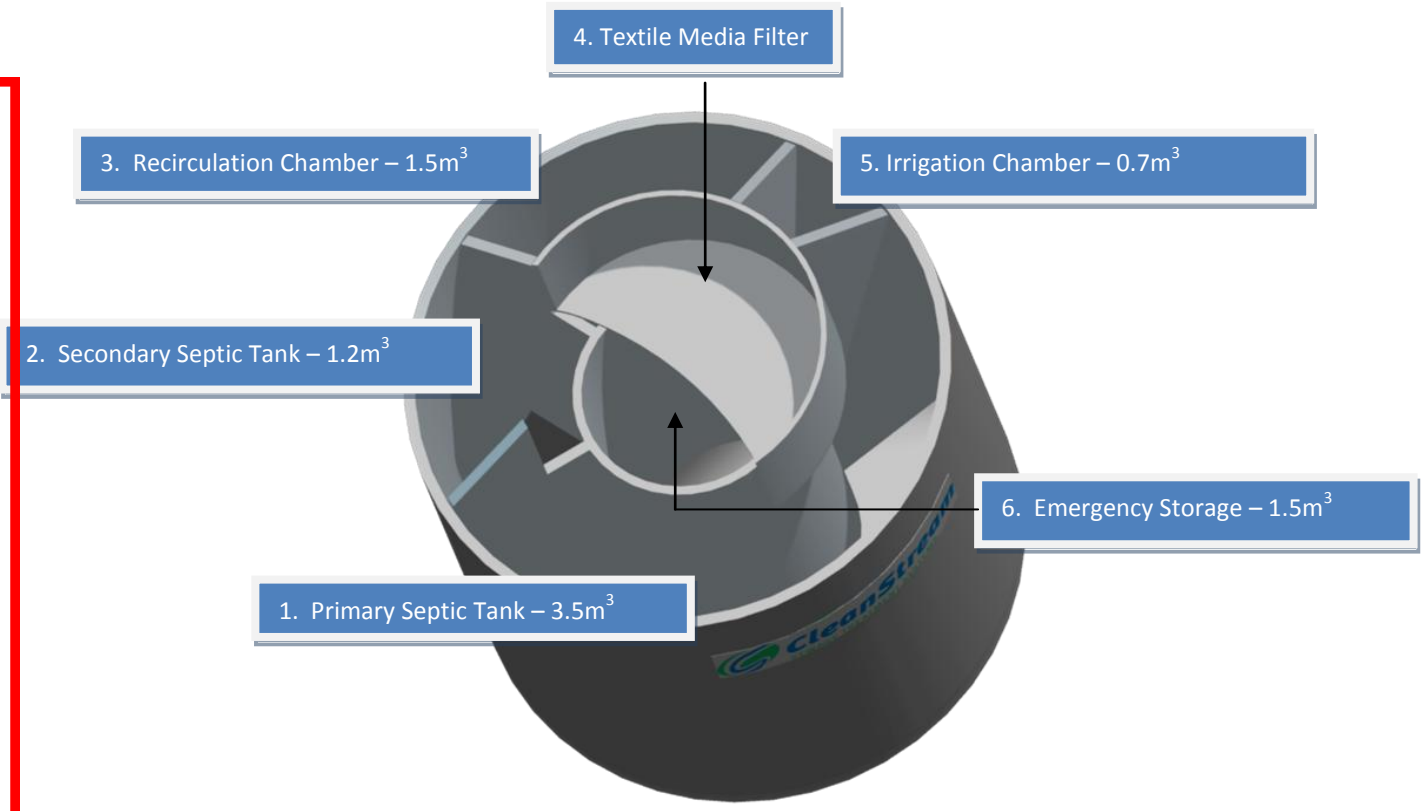

1. The primary septic tank receives the wastewater. It acts like a conventional septic tank and reduces BOD and suspended solids. Effluent then passes through a particulates filter designed to stop large objects from inhibiting the treatment process further on.

2. The secondary septic provides an anoxic environment which aids in nitrate removal converting ammonia into nitrate, while reducing BOD and suspended solids. At the completion of this stage effluent passes through an attached growth filter, which provides an environment for denitrifying bacteria to flourish.

3. The Recirculation Chamber contains a large amount of emergency capacity and is a storage place for effluent before it passes through the textile filter.

4. From the Recirculation chamber treated wastewater is pumped onto the textile filter, this effectively aerates the effluent. Organic Nitrogen is converted to Ammonia by nitrifying bacteria. This process increases effluent quality as it passes through the textile media in the textile filter. The effluent then flows back into the secondary septic tank, unless there is sufficient forward flow to warrant irrigation in which case it drains into the irrigation chamber. Recirculation generally happens multiple times before irrigation is needed.

5. From the irrigation chamber the effluent is passed through a 130 micron Arkal Filter and then dispersed through self compensating drip irrigation.

6. In the event of pump failure emergency storage is provided in the central and recirculation chambers.

U tube video on cleaning arkal filter

https://youtu.be/3qPjnwCusHM

KDC - Approved Building Consent Document - BC210441 - Pg 168 of 336 - 30/08/2021 - ComplyNZ

KDC - Approved Building Consent Document - BC210441 - Pg 169 of 336 - 30/08/2021 - ComplyNZ



SUBMERSIBLE DRAINAGE PUMPS

DAVEY®



Sump Pumps

Submersible Drainage Pumps

Model Numbers: D15VA & D42A/B

APPLICATIONS

- Lawn & garden irrigation
- Sump emptying to higher heads
- Treated & effluent disposal
- Water transfer
- Grey water pumping
- Pumping of light slurries and factory waste

WHY CHOOSE D15VA, D42A/B SUBMERSIBLE DRAINING PUMPS?

Corrosion resistant 304 stainless steel shaft, motor shell and fasteners
- Long service life
- Attractive, lasting appearane

D42A/B have cast 316 stainless steel motor caps and super tough engineered thermo plastic pump casing
- Oustanding corrosion resistance.

Corrosion resistant stainless steel fine mesh suction strainer with large surface area
- Prevents blockages of the pump by solids.

Double mechanical shaft seal in oil bath with hard faced silicon carbide/ceramic seal on pump side (D15VA models have single seals)
- Superior reliability
- Added motor protection

Centrifugal multistage 2 & 3 impeller designs
- Higher pressures and increased efficiency.

Closed vane impellers with long engagement “D” drives
- Positive operation

D42A/B have patented independently floating neck rings
- Outstanding pump performance
- Long pump life

In-built automatic thermal overload
- Protects the motor in the event of bloackage or voltage supply problems.

HO7RNF oil resistant leads, 10 metres long with 3 pin power plug
- Easy to connect to power supply
- Longer life in dirty water.

Semi vortex, open impeller, centrifugal design
- Able to pump soft solids in suspension
- Less susceptible to blockages

D15VA models feature a special recirculation port to keep soft solids agitated in sump, improving ability to pump away such solids.

Sand slinger lip seal
- Added protection

Automatic resetting thermal overload
- Protected against overloading

MATERIALS OF CONSTRUCTION		
Model	**D15VA**	**D42A/B**
Part	**Material**	
Impeller	Glass filled polycarbonate	
Mechanical seal (pump end)	Carbon / Ceramic	
Mechanical seal (motor end)	Silicon carbide/ceramic in oil bath	
Shaft seal elastomer	Nitrile rubber	
Pump shaft	304 stainless steel	
O'rings	Nitrile rubber	
Motor shell	304 stainless steel	
Handle	304 stainless steel	
Fasteners	304 stainless steel	
Float & power supply leads	HO7RN-F oil resistant	

OPERATING LIMITS		
Model	**D15VA**	**D42A/B**
Flow capacities to	140 lpm	130 lpm
Maximum total head	7m	32m
Maximum submergence	12m	12m
Maximum water temperature	50°C	40°C
Maximum soft solids	20mm O.D.	1.9mm O.D.

ELECTRICAL DATA		
Model	**D15VA**	**D42A/B**
Supply voltage	220 - 240v	
Supply frequency	50Hz single phase	
Speed	2 pole, 2850rpm	
Full load current	1.5A	4.0A
Locked rotor current	9A	14A
Input		0.94kW
Output	0.15kW	0.60kW
IP rating		X8
Insulation class	Class F	
Starting		P.S.C.
Lead	10m long	

HYDRAULIC PERFORMANCE

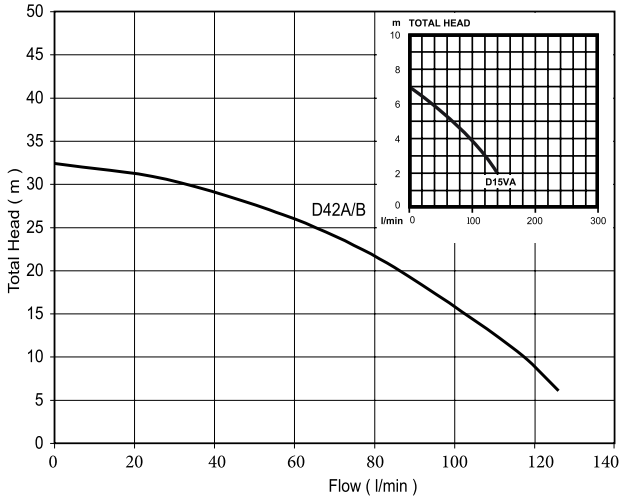

DIMENSIONS (mm)

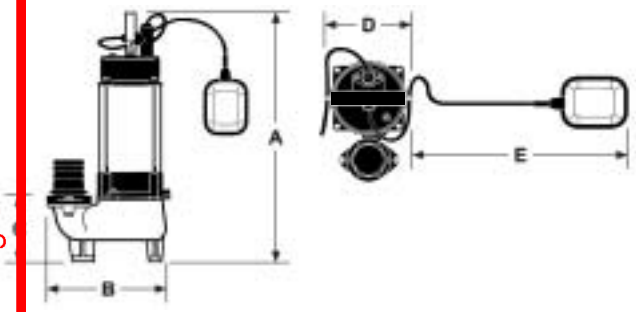

Model	A	B	C	D	E (max)	Outlet BSP	Net Weight (kg)
D15VA	315	160	75	115	250	1"F	5.5
D42A/B	475	240	130	195	330	1"F	18.5

INSTALLATION AND PRIMING

Use a rope to position and retrieve the pump. Do not lower or retrieve the pump using the power lead as this may damage the cable entry seals, causing water leaks and unsafe operation.
Don't use this product for recirculating or filtering swimming pools, spas, etc. While these pumps are built to high safety standards, they are not approved for installations where people will be in the water while they are operating.
Don't pump abrasive materials. Sand and grit in the water being pumped will accelerate wear, causing shortened pump life. Keep your pump clean, particularly in situations where lint, hair or fibrous materials may get bound around the pump shaft.
Regular inspection and cleaning will extend pump life. Make room for the float switch to operate.
Automatic models have a float switch to turn them on when the water level rises and turn them off again when it has been pumped down to the safe operating level of the pump. If the float switch is not free to rise and fall, correct pump operation may not be possible.
Don't run your pump dry.

KDC - Approved Building Consent Document - BC210441 - Pg 170 of 336 - 30/08/2021 - ComplyNZ

DAVEY

This literature is not a complete guide to product usage. Further information is available from your Davey dealer, Davey Customer Service Centre and from the relevant product Installation and Operating Instructions. This data sheet must be read in conjunction with the relevant product Installation and Operating Instructions and all applicable statutory requirements. Product specifications may change without notice.
© Davey Water Products 2012.

DURACRETE
PRECAST TO LAST

March 2014

Information on CleanStream Control Box V1.1 for Authorised Installers and Service Providers

KDC - Approved Building Consent Document - BC210441 - Pg 171 of 336 - 30/08/2021 - ComplyNZ

1 Mode Setting Switch

In standard operating situations this mode switch should be set to **"O".** This will give the best treatment for the average house of approximately 1200 litres per day.

Do not use any other of the mode options without being given direct instruction from Duracrete. Doing so will change the nature of the treatment significantly and will require specific management.

Mode I: is used to treat approximately 900 litres per day
Mode O: is used to treat approximately 1200 litres per day
Mode II: is used to treat approximately 1500 litres per day

2 Alarm Panel

Any muting of the alarm will be temporary and the buzzer will reactivate in 24hrs from when it was silenced.
It is worth remembering that if it is silenced at 11.30 pm and the problem not rectified it will reactivate at 11.30 pm the next night.
Even when an alarm is silenced the alert light will continue to indicate which alarm has been triggered.

Alert 1: Recirculation Chamber
Alert 2: Irrigation Chamber

3 Repairs

There are no serviceable components within the Control Box, there is nothing that can be replaced or be repaired easily, and **opening the box voids the manufacturer's warranty.**

The Service Provider should carry a spare control box at all times.

If a control box is determined to malfunction, the Service Provider is required to swap out the control box, and send the faulty unit back to Duracrete.

If the box is returned with broken seals then warranties will be void.

Duracrete Products Ltd. A division of Garry Concrete Products Ltd.
Saleyard Rd, Kauri, P.O. Box 4194, Kamo, Whangarei 0141
Phone 0-9-435 2412 Fax 0-9-435 2432, 0800 DURACRETE (387 227)
www.duracrete.co.nz
Member: Concrete Product Manufacturers Association NZ

CleanStream
SEWAGE TREATMENT SYSTEMS

KDC - Approved Building Consent Document - BC210441 - Pg 172 of 336 - 30/08/2021 - ComplyNZ

Plants Recommended for Effluent Fields



Generally perennial plants that are shallow rooted with vigorous growth and tolerant of wet soil conditions are most suited for effluent fields. Plant spacings can be calculated at one plant per each square metre of effluent field.

The two main types of effluent field are:

LPED (Low pressure effluent distribution) associated with primary wastewater treatment (septic tank) where the aerobic action of bacteria occurs in the soil. Effluent is distributed via 100 mm pipes buried some 200 mm into the ground with small seepage holes drilled along their length. The concern here is the possibility of damage or blockage to the pipes from deeper rooted plants.

Pressure compensating dripper lines associated with secondary wastewater treatment systems (treatment plants) Aerobic treatment occurs in tank and the effluent is distributed to ground via 15 mm lines laid on the ground under a layer of mulch.

Plants that are suitable for both effluent field options

Grasses, Grass Like or Flaxes

Botanical Name	Maori Name	Common Name	Typical Height
Arthopodium cirratum	Rengarenga	Rock lily	20cm – 40cm
Cortaderia fulvida	Toetoe, Kakaho	Cutty grass	1m – 1.5m
Cortaderia toetoe	Toetoe, Kakaho	Cutty grass	1.5m – 2m
Cyperus ustulatus	Toetoe upokotangata	Giant umbrella sedge	60cm – 1m
Dianella nigra	Turutu	NZ blueberry	30cm – 60cm
Juncus gregiflorus Wiwi		Common rush	50cm – 1.5m
Leptocarpus similis Oioi		Jointed Rush	50cm – 70cm
Machaerina sinclairi	Pepepe, Toetoe tuhara	Machaerina	50cm – 1m
Phormium tenax	Harakeke	Flax	1.5m – 2m
Phormium tenax purpurea		Purple flax	1.5m – 2m
Uncinia unciniata		Hook Grass	20cm – 40cm

Grasses / Sedges / Rushes

Botanical Name	Maori Name	Common Name
Yorkshire Fog		
Red Clover		
Gahnia Xanthocarpa/Se folia	Tupari Maunga	Gahnia
Cyperus Ustulatus	Toetoe, Upoko-Tangata	Giant Umbrealla Sledge
Eleocharis Acuta	Toetoe	Sharp Spike Edge
Cortaderia Fulvida		
Apodasmia Similis Oioi		Jointed Wire Rush
Carex secta	Purei / Makura	
C.Flagellifera		
C.Germinata		
C.Lessoniana		
C.Virgata		

Spreading Ground Covers

Botanical Name	Maori Name	Common Name	Typical Height
Corposma acerosa	Tataraheke	Sand Corposma	30cm – 40cm
Elatostema rugosum	Parataniwha		40cm – 70cm
Fuchsia procumbins			10cm – 20cm

KDC - Approved Building Consent Document - BC210441 - Pg 173 of 336 - 30/08/2021 - ComplyNZ

Shrubs and small trees (typically less than 5m)

Botanical Name	Maori Name	Common Name	Typical Height
Brachyglottis repanda	Rangiora		3m – 4m
Carpodetus serratus	Putaputaweta	Marble leaf	3m – 5m
Coprosma arborea	Mamangi		3m – 4m
Coprosma areolate		Thin-leave coprosma	3m – 4m
Coprosma culivars which are coloured (lots of options)			1m – 3m
Coprosma propinqua	Mingimingi		1m – 3m
Coprosma repens	Taupata	Mirror Plant	2m – 4m
Coprosma rhamnioides			1m – 2m
Coprosma robusta	Karamu		2m – 4m
Clianthus puniceus	Kowhai ngutu-kaka	Kaka Beak	2m – 3m
Fuchsia excorticate	Kotukutuku	Tree Fuchsia	3m – 5m
Macropiper excelsus	Kawakawa		1m – 3m

Trees (Typically 5m or more)

Botanical Name	Maori Name	Common Name	Typical Height
Kunzea ericoides	Kanuka	White Tea-tree	6m – 10m
Cordylineaustralis	Ti kouka	Cabbage Tree	5m – 10m
Leptospermum scoparium	Manuka	Tea-tree	4m – 8m

Ferns

Botanical Name	Maori Name	Common Name	Typical Height
Blechnum novaezealandiae	Kiokio		1m – 2m
Dicksonia squarrose	Wheki	Tree Fern	3m – 5m
Hypolepis dicksonioides			1m – 1.5m

Larger Deeper Rooted Plants Suited to Pressure Compensating Dripper Lines Only

Trees (Typically 5m or more)

Botanical Name	Maori Name	Common Name	Typical Height
Laurelia novae-zealandiae	Pukatea		10m – 20m
Corynocarpus laevigata	Karaka		8m – 15m
Dacrycarpus dacrydiodes	Kahikatea	White pine	20m – 30m
Pittosporum eugenoides	Tarata	Lemonwood	6m – 10m
Aristotelia serrata	Makomako	Wineberry	6m – 10m
Pittosporum tenuifolium	Kohuhu		5m – 8m
Plagianthus regius	Manatu	Ribbonwood	8m – 12m
Hoheria populnea	Houhere		6m – 8m
Melicytus ramiflorus	Mahoe	Whiteywood	4m – 6m
Rhopalostylis sapida	Nikau		6m – 12m
Pennantia corymbose	Kaikomako		6m – 10m
Schflera digitate	Pate, Pata	Seven Finger	4m – 6m
Vitex luscens	Puriri		10m – 20m
Cyathea Medullaris	Mamaku		10m – 20m



WILEY GEOTECHNICAL LTD

BOREHOLE No. 1

SITE: Kendall eff field

REF: 21076

Sheet 1 of 1

REDUCED LEVEL (RL) / INFERRED GEOLOGY	DESCRIPTION OF SOIL	SOIL SYMBOL	DEPTH (m)	SAMPLE TYPE	WATER CONTENT (%)	WATER LEVEL	CORRECTED VANE SHEAR STRENGTH (kPa) ● Peak Field Vane ○ Remoulded Field vane 50 100 150	SCALA PENETROMETER BLOWS / 100 mm 5 10 15
	T/S topsoil, dark brown 150mm Silt dessication cracks to 500mm moderatley clayey, moderately plastic EOH at 1.2m		1 2 3 4 5					

NOTES Groundwater was not encountered.
waitemata group P

LOGGED BY: CS
DATE DRILLED: 20-Jun-21
DRILL METHOD 50 mm Hand Auger

KDC - Approved Building Consent Document - BC210441 - Pg 174 of 336 - 30/08/2021 - Comply NZ

CADetailer Ltd

SPECIFICATION
of work to be done and materials to be used in carrying out the works shown on the accompanying drawings

KDC - Approved Building Consent Document - BC210441 - Pg 175 of 336 - 30/08/2021 - ComplyNZ

Kendall

Project Specification

Lot 81 The Sanctuary, Mangawhai, New Zealand
Project Ref:

Printed: 22 June 2021

COASTAL HOMES

masterspec

Specification built using Masterspec software
Project ID: 226717 - 218627

TABLE OF CONTENTS

1013	DOCUMENT CONTROL	3
1220	PROJECT	4
1232	INTERPRETATION & DEFINITIONS	6
1233	REFERENCED DOCUMENTS	8
1234	DOCUMENTATION	9
1238	AS BUILT DOCUMENTATION	14
1239	OPERATION & MAINTENANCE	15
1270	CONSTRUCTION	18
2210	PREPARATION & GROUNDWORK	27
3155FR	FIRTH RIBRAFT® FLOOR SYSTEMS	30
3813F	FUTUREBUILD® NZ - LVL STRUCTURAL FRAMING	36
3820	CARPENTRY	38
4161P	PAUL INDUSTRIES UNDERLAYS, FOIL AND DPC	42
4161T	THERMAKRAFT UNDERLAYS, FOILS, DPC, DPM, & TAPES	45
4171E	ECOPLY® BARRIER RIGID AIR BARRIER SYSTEM	49
4239JH	JAMES HARDIE® SOFFITS	52
4282C	SPECIALIZED EZPANEL AAC PANEL CLADDING SYSTEM	56
4323G	GERARD® STEEL TILE ROOFING	64
4521	ALUMINIUM WINDOWS AND DOORS	70
4610	GLAZING RESIDENTIAL	78
4710EW	EARTHWOOL® GLASSWOOL INSULATION	83
4821	FLASHINGS	90
5113G	GIB® PLASTERBOARD LININGS	93
5151	INTERNAL TRIM	99
5230	INTERIOR DOORS	101
5510	JOINERY & PROPRIETARY FIXTURES	103
6221M	MAPEI® TILING SOLUTIONS	105
6511	CARPETING	114
6700	PAINTING GENERAL	117
6711	PAINTING EXTERIOR	122
6721	PAINTING INTERIOR	123
7112	WATER STORAGE TANKS	124
7120	HOT & COLD WATER SYSTEM	128

KDC - Approved Building Consent Document - BC210441 - Pg 176 of 336 - 30/08/2021 - ComplyNZ

7151	SANITARY FIXTURES, TAPWARE & ACCESSORIES	134
7411	RAINWATER SPOUTING SYSTEMS	139
7420	SANITARY SYSTEMS	143
7430	DRAINAGE	145
7513	CENTRAL HEATING SYSTEMS	147
7612	RESIDENTIAL EXTRACT SYSTEMS	149
7701	ELECTRICAL BASIC	152

KDC - Approved Building Consent Document - BC210441 - Pg 177 of 336 - 30/08/2021 - ComplyNZ

1013 DOCUMENT CONTROL

1 DOCUMENT CONTROL

Document Control

1.1 PREPARED BY

Company:	CADetailer Ltd.
Postal Address:	10 Danny Place
Suburb:	Pyes Pa
City:	Tauranga
Telephone:	021 471 119
Email:	marc@cadetailer.co.nz

1.2 DOCUMENT DETAILS

Project Address:	Lot 81 The Sanctuary, Robert Hastie Drive, Mangawhai
Client:	CH Northland Ltd.
Client Postal Address:	12 William Gilbert Drive, Mangawhai
Client Telephone:	021 222 4833

KDC - Approved Building Consent Document - BC210441 - Pg 178 of 336 - 30/08/2021 - ComplyNZ

1220 PROJECT

1 GENERAL

This general section describes the project including:

- A description of the work
- Design construction safety
- Principal's Health & Safety matters
- Site description, features and restrictions
- Design parameters for design by contractor
- Archaeological discovery

KDC - Approved Building Consent Document - BC210441 - Pg 179 of 336 - 30/08/2021 - ComplyNZ

1.1 READ ALL SECTIONS TOGETHER

Read all general sections together with all other sections.

1.2 DESCRIPTION OF THE WORK

Single level residential dwelling clad in EZpanel over cavity. RibRaft Slab Foundation, Timber framed walls, Double glazed Aluminium Joinery, Prefabricated timber roof trusses, metal tile roofing. Dwelling contains 4 bedrooms, open plan living, dining, and kitchen with scullery, a bathroom and ensuite, seperate toilet, laundry, double garage with ride-on mower garage and pump room for pool.

1.3 RESTRICTED BUILDING WORK

This project includes Restricted Building Work.

Design Construction Safety

1.4 DESIGN CONSTRUCTION SAFETY

The project designers are unaware of unusual or atypical features, which a reasonably experienced contractor may not be aware of, that may present a hazard or risk during a typical construction process. The Contractor is still required to undertake its own assessment, to determine if they consider there are any further safety matters and provide for these in carrying out the construction of the work.

Principal's Health & Safety Matters

1.5 PRINCIPAL'S KNOWN SITE HAZARDS

Site hazards known to the principal are to be listed before construction commences.

1.6 PRINCIPAL'S SITE HEALTH AND SAFETY PLAN

A copy of the principal's site health and safety plan must be on site at all times.

Site

1.7 SITE

The site consists of: Moderate to steep sloping topography in a rural environment
As shown on drawing: 101, 102

1.8 LEGAL DESCRIPTION

The site of the works, the street address and the legal description are shown on the drawings.

Site environment - Durability

1.9 EXPOSURE ZONE

The exposure zone is to NZS 3604, Section 4 Durability, 4.2 Exposure zones and NZBC E2/AS1.
The site zone is: C

Site environment - Wind

1.10 WIND DESIGN PARAMETERS - NON SPECIFIC DESIGN

The design wind pressures are to NZS 3604, Table 5.4 Determination of wind zone, up to and including Extra High Wind Zone.
Building wind zone High

Site environment - Seismic

1.11 EARTHQUAKE ZONE - NON SPECIFIC DESIGN

The zone is to NZS 3604, Section 5 Bracing design, 5.3 Earthquake bracing demand.
The earthquake zone 1
is:

Archaeological discovery

1.12 REPORT FINDING ANY ANTIQUITIES AND ITEMS OF VALUE

Report the finding of any fossils, antiquities and other items of value, to the Contract Administrator. All to remain undisturbed until approval is given for removal.

Pre-1900, items or evidence of human activity on the site, come under the Heritage New Zealand Pouhere Taonga Act 2014. If such items or evidence is discovered work must stop immediately and the Contract Administrator must be notified immediately. The site may be classified as an Archaeological Site under the Act, and the Contract Administrator or Owner must contact the Heritage New Zealand for authority to proceed.

Post-1900 items remain the property of the owner, pre-1900 items may remain the property of the owner or the Crown subject to what is found.

There are no known archaeological information relating to this site.

KDC - Approved Building Consent Document - BC210441 - Pg 180 of 336 - 30/08/2021 - ComplyNZ

1232 INTERPRETATION & DEFINITIONS

1 GENERAL

This general section relates to definitions and interpretation that are used in this specification.

KDC - Approved Building Consent Document - BC210441 - Pg 181 of 336 - 30/08/2021 - ComplyNZ

Definitions

1.1 DEFINITIONS

Hold point:	A stage of the construction where the contract administrator and any other nominated person requires notice to be given that particular work is to be carried out. Work may not proceed on that particular part until the contract administrator and any other nominated person has advised that work can continue. A notice period of 2 Working Days is required unless stated otherwise.
Notification point:	A stage of the construction where the contract administrator and any other nominated person requires notice to be given that particular work is to be carried out. Work may continue and the contract administrator and any other nominated person may choose whether or not they wish to witness the particular work being carried out. A notice period of 2 Working Days is required unless stated otherwise.
Product:	A thing or substance produced by natural process or manufacture.
Proprietary:	Identifiable by naming the manufacturer, supplier, installer, trade name, brand name, catalogue or reference number.
Provide and fix:	"Provide" or "fix" or "supply" or "fix" if used separately mean provide and fix unless explicitly stated otherwise.
Required:	Required by the documents, the New Zealand Building Code or by a statutory authority.
Review:	Review by the contract administrator and other consultants is for general compliance only. Review does not remove the need for the contractor to comply with the stated requirements, details and specifications of the manufacturers and suppliers of individual components, materials and finishes. Neither can the review be construed as authorising departures from the contract documents.
Working day:	Working day means a calendar day other than any Saturday, Sunday, public holiday or any day falling within the period from 24 December to 5 January, both days inclusive, irrespective of the days on which work is actually carried out.
Workplace:	Workplace means the place where work is being carried out, or is customarily carried out, for a business or undertaking including any place where a worker goes, or is likely to be, while at work (under Health and Safety at Work Act 2015).

1.2 PERSONNEL

Principal:	The person defined as "Principal" in the conditions of contract.
Contractor:	The person contracted by the principal to carry out the contract.
Contract administrator:	The person appointed by the principal to administer the contract on the principal's behalf. Where no person has been appointed by the principal, it means the principal or the principal's representative.

KDC - Approved Building Consent Document - BC210441 - Pg 182 of 336 - 30/08/2021 - ComplyNZ

1.3 ABBREVIATIONS

The following abbreviations are used throughout the specification:

AAMA	American Architectural Manufacturers Association
AS	Australian Standard
AS/NZS	Joint Australian/New Zealand Standard
ASTM	American Society for Testing and Materials
AWCINZ	Association of Wall and Ceiling Industries of New Zealand Inc.
BCA	Building Consent Authority
BRANZ	Building Research Association of New Zealand
BS	British Standard
COP	Code of practice
CSIRO	Commonwealth Scientific and Industrial Research Organisation
HERA	Heavy Engineering Research Association
LBP	Licensed Building Practitioner
MBIE	Ministry of Business, Innovation and Employment
MPNZA	Master Painters New Zealand Association Inc
NZBC	New Zealand Building Code
NZS	New Zealand Standard
NZS/AS	Joint New Zealand/Australian Standard
NZTA	New Zealand Transport Agency
NUO	Network Utility Operator
OSH	Occupational Safety and Health
PCBU	Person Conducting a Business or Undertaking (under Health and Safety at Work Act 2015)
RBW	Restricted Building Work
SARNZ	Scaffolding and Rigging New Zealand Inc
SED	Specific Engineering Design
TA	Territorial Authority
TNZ	Transit New Zealand (Transit New Zealand is now New Zealand Transport Agency NZTA - some specifications are still prefixed TNZ)

1.4 DEFINED WORDS

Words defined in the conditions of contract, New Zealand Standards, or other reference documents, to have the same interpretation and meaning when used in their lower case, title case or upper case form in the specification text.

1.5 WORDS IMPORTING PLURAL AND SINGULAR

Where the context requires, words importing singular only, also include plural and vice versa.

1233 REFERENCED DOCUMENTS

1 GENERAL

1.1 REFERENCED DOCUMENTS

Throughout this specification, reference is made to various New Zealand Building Code Compliance Documents (NZBC __), acceptable solutions (__ AS_) and verification methods (__ VM_) for criteria and/or methods used to establish compliance with the New Zealand Building Code.

Reference is also made to various standards produced by Standards New Zealand (NZS, AS/NZS, NZS/AS), overseas standards and to listed Acts, Regulations and various industry codes of practice and practice guides. The latest edition (including amendments and provisional editions) at the date of this specification applies unless stated otherwise.

It is the responsibility of the contractor to be familiar with the materials and expert in the techniques quoted in these publications.

Documents cited both directly and within other cited publications are deemed to form part of this specification. However, this specification takes precedence in the event of it being at variance with the cited documents.

1.2 DOCUMENTS

Documents referred to in the GENERAL sections are:

NZBC F5/AS1	Construction and demolition hazards
AS/NZS 1170.2	Structural design actions - Wind loads
NZS 1170.5	Structural design actions - Earthquake actions - New Zealand
AS/NZS 3012	Electrical installations - Construction and demolition sites
NZS 3109	Concrete construction
NZS 3114	Specification for concrete surface finishes
NZS 3602	Timber and wood-based products for use in building
NZS 3604	Timber-framed buildings
NZS 4210	Masonry construction: Materials and workmanship
NZS 4781	Code of Practice for Safety in Welding and Cutting
AS/NZS 5131	Structural steelwork - Fabrication and erection
NZS 6803	Acoustics - Construction Noise

Building Act 2004
Building Regulations 1992
Health and Safety at Work Act 2015
Health and Safety at Work (General Risk and Workplace Management) Regulations 2016
Health and Safety at Work (Hazardous Substances) Regulations 2017
Health and Safety in Employment Regulations 1995
New Zealand Building Code
Heritage New Zealand Pouhere Taonga Act 2014
Resource Management Act 1991
Smoke-free Environments Act 1990

WorkSafe	Guidelines for the provision of facilities and general safety in the construction industry
WorkSafe	Good Practice Guidelines - Excavation Safety
WorkSafe	Scaffolding in New Zealand - Good Practice Guidelines
WorkSafe	Managing Work Site Traffic - Good Practice Guidelines

KDC - Approved Building Consent Document - BC210441 - Pg 183 of 336 - 30/08/2021 - ComplyNZ

1234 DOCUMENTATION

1 GENERAL

This general section relates to documentation required by the Territorial Authority / Building Consent Authority for compliance with the New Zealand Building Code. It also includes documentation relating to:

- Substitutions
- Manufacturers' documents
- Branded work sections
- Care of construction documents
- Confidentiality of documents
- Receipt of construction documents

Building Consent Authority documentation

1.1 BUILDING CONSENT

Obtain the original building consent forms and documents from the owner and keep them on site, preserve the condition of consent forms and documents. Liaise with the building consent authority for all notices to be given and all inspections required during construction to ensure compliance. Return the consent form and documents to the owner on completion.

1.2 BUILDING CONSENT COMPLIANCE

It is an offence under the Building Act 2004

- to carry out any work not in accordance with the building consent.
- to carry out Restricted Building Work by anyone other than a Licensed Building Practitioner licensed for that type of work.

The resolution of matters concerning building code compliance to be referred to the contract administrator for a direction and then if required to the BCA for consent.

Where any alteration is requested by the territorial authority or any other authority, do not undertake such alteration until the matter has been referred to the contract administrator for direction.

1.3 PROJECT PERSONNEL

Provide names and contact details of the contractor's key personnel and tradespersons who are involved with the project. Review the list once a month and reissue it if changes have been made.

Licensed Building Practitioner documentation

KDC - Approved Building Consent Document - BC210441 - Pg 184 of 336 - 30/08/2021 - ComplyNZ

1.4 LICENSED BUILDING PRACTITIONERS

Provide LBP details. Provide names, LBP numbers, areas of practice and contact information. Provide this information to the BCA before commencing work on the Restricted Building Work in the form required by the BCA. Advise the BCA of any change to an LPB previously advised.

Include the following as applicable

- Site LBP
- Carpenter
- Foundations 1 Concrete foundation walls and concrete slab-on-ground constructor
- Foundations 2 Concrete or timber pile foundations constructor
- Bricklaying and block laying 1 Brick / masonry veneer
- Bricklaying and block laying 2 Structural masonry - Bricklayer / Blocklayer
- Roofing 1 Concrete / clay tile roofer
- Roofing 2 Profiled metal roofer and/or wall cladding installer
- Roofing 3 Metal tile roofer
- Roofing 4 Membrane roofer
- Roofing 5 Torch on membrane roofer
- Roofing 6 Liquid membrane roofer
- Roofing 7 Shingle / slate roofer
- External plastering 1 Solid plasterer
- External plastering 2 Proprietary Plaster Cladding Systems (PPCS) plasterer

Also provide names and contact details of the following

- Registered drainlayer
- Registered plumber
- Registered gasfitter
- Registered electrician

1.5 RECORD OF WORK

Where Restricted Building Work is carried out by a LBP, on completion provide a Record of Work. Provide copies to both the BCA and the Contract Administrator.

Compliance information

1.6 DOCUMENTATION REQUIRED FOR CODE COMPLIANCE

Information may be required either as a condition of the contract documents or as a condition of the building consent. It may include the following:

- Applicators approval certificate from the manufacturer / supplier
- Manufacturer's / supplier's warranty
- Installer / applicator's warranty
- Producer Statement (PS1) - Design
- Producer Statement (PS3) - Construction from the applicator / installer
- Producer Statement (PS4) - Construction review from an acceptable suitably qualified person

Refer to the general sections for the requirements for compliance information to be provided by the contractor.

Refer to the building consent for the requirements for compliance information to be provided by the contractor.

Obtain required documents from the relevant parties for delivery to the contract administrator after the final inspection has been carried out by the BCA.

1.7 PRODUCER STATEMENTS

When producer statements verifying construction are required, provide copies to both the Building Consent Authority and the Contract Administrator. Provide producer statements in the form required by the BCA.

Residential building contract

1.8 CHECKLIST

If requested provide evidence of the prescribed checklist given to the residential client.

1.9 DISCLOSURE STATEMENT

If requested provide evidence of the disclosure statement given to the residential client.

KDC - Approved Building Consent Document - BC210441 - Pg 185 of 336 - 30/08/2021 - ComplyNZ

1.10 BUILDING CONTRACT

If requested provide evidence of the written building contract that the residential customer has signed.

1.11 DOCUMENTATION REQUIRED ON COMPLETION

As soon as practicable after completion of the building work, provide in writing the following information and documentation to the client and the relevant territorial authority.

Information and documentation relating to:

- The identity of the building contractor and the subcontractors who carried out the work.
- Maintenance requirements for any products incorporated in the building.

If applicable also provide any guarantee or insurance obtained by the building contractor in relation to the building work.

Substitutions

1.12 ACCEPTABLE PRODUCT/MATERIAL SUPPLIERS

Where a product or material supplier is named in SELECTIONS, the product/material must be provided by the named supplier. Where more than one named supplier, any one of the named suppliers will be acceptable.

1.13 NO SUBSTITUTIONS

Substitutions are not permitted to any of the specified products and systems listed in a section unless specified otherwise. If a product is not available then immediately contact the contract administrator for direction.

1.14 PROPOSED SUBSTITUTIONS

Substitution of products or systems contained within branded work sections is not allowed. The contractor may propose substitutions to products within non branded work sections, when the contractor has determined that the proposed substitution is an alternative to the specified product. The Contract administrator is not bound to accept any substitutions. Submit a draft proposal detailing the substitution to the contract administrator before proceeding with full notification.

1.15 NOTIFICATION OF SUBSTITUTIONS

Notify the contract administrator of proposed substitution of specified products. Notification to include but not be limited to:

- Product identification
- Manufacturer's name, address, telephone number, website and email address
- Detailed comparison between the properties and characteristics of the specified product and the proposed substitution
- Statement of NZBC compliance including durability
- Details of manufacturer warranties

Plus an assessment of:

- Any changes required to the programme including any extension of time required
- Any consequential effects of the proposed substitution
- Any effect the substitution may have on Health & Safety requirements
- Allowance for time and cost for re-design and documentation (if applicable)
- Allowance for time and cost for obtaining an amendment to the Building Consent (if applicable)
- Any change in cost associated with the proposed substitution

and if requested:

- All current manufacturer's literature on the product
- Accreditations and appraisals available
- Reference standards
- Product limitations
- Samples
- List of existing installations in the vicinity of the project

1.16 ACCEPTANCE OF SUBSTITUTIONS

Acceptance of any proposed substitutions will be given in writing by the contract administrator.

Amendments to issued Building Consent

KDC - Approved Building Consent Document - BC210441 - Pg 186 of 336 - 30/08/2021 - ComplyNZ

1.17 CONTRACTOR AMENDMENTS TO BUILDING CONSENT

Where the contractor has sought acceptance of a substitution or a variation which is for the contractor's own convenience and the substitution or variation requires an amendment to the Building Consent, the contractor must apply for and obtain the required amendment.

The contractor must:

- Obtain approval for substitutions from the contract administrator.
- Prepare and provide to the BCA all documentation required for the amendment.
- Pay all fees and other costs associated with this amendment.
- Where the amendment affects other approved plans, also amend those plans.

1.18 PRINCIPAL AMENDMENTS TO BUILDING CONSENT

Where the principal is proposing a substitution or a variation which requires an amendment to the Building Consent, the contractor must provide to the principal information that the contractor has that is required for the amendment.

The principal will:

- Prepare and provide to the BCA all documentation required for the amendment.
- Pay all fees and other costs associated with this amendment.
- Where the amendment affects other approved plans, also amend those plans.

Manufacturer's documents

1.19 MANUFACTURER'S AND SUPPLIER'S INSTALLATION REQUIREMENTS

Manufacturer's and supplier's requirements, instructions, specifications or details mean those issued by them for their particular product, material or component and are the latest edition.

1.20 CONTRACTOR TO OBTAIN CURRENT DOCUMENTATION

Where manufacturer’s installation, application and execution requirements are referred to in this specification, the Contractor must ensure they are fully aware of this documentation. Whenever necessary obtain and keep on site the relevant latest version of such documentation and make it available to workers carrying out that part of the work.

1.21 DOCUMENTATION PROVIDED FOR BUILDING CONSENT

Documentation including manufacturer’s installation instructions, specification data sheets, producer statements, BRANZ and similar appraisals may be included in the issued Building Consent. These documents have been provided only to demonstrate compliance with the NZBC.

Branded work sections

1.22 BRANDED PRODUCTS / SYSTEMS

Where branded products and systems are specified, all products and components of the system must be as per the specification.

1.23 CROSS REFERENCED WORK SECTIONS

If any related work is cross referenced to a generic work section, but only the equivalent branded section is included in the specification, use that branded section. Confirm with the contract administrator if there is any doubt.

Care of construction documents

1.24 CONSTRUCTION ISSUE

Take receipt of the plans, specifications and other documents issued “for construction”. Keep at least one copy on site available for use by all on site workers. Keep a record of copies provided to others including subcontractors. Protect the documents as appropriate. Obtain replacement copies for documents that have become damaged.

1.25 REVISIONS TO CONSTRUCTION ISSUE

Where revised plans and other documents are issued ensure that superseded documents are deleted from the working sets. Ensure that subcontractors are provided with amended documents. Delete superseded documents by either:

- removing them from the working copy of the construction issue; or
- marking them as superseded

KDC - Approved Building Consent Document - BC210441 - Pg 187 of 336 - 30/08/2021 - ComplyNZ

1.26 RETURN DOCUMENTS ISSUED FOR CONSTRUCTION

On completion of the contract works:

- Keep such copies of the plans, specification and other documents as reasonably required for contractor's record purposes.
- Retrieve all other copies no longer required by parties.
- Agree method of disposal of such documents with the Contract Administrator.

The Contract Administrator will advise whether such documents shall be:

- delivered to the Contract Administrator/Owner; or
- disposed of by normal waste disposal methods; or
- disposed of by secure document disposal methods.

Confidentiality of documents

1.27 CONFIDENTIALITY OF DOCUMENTS

Documents shall not be given or copied to others who do not require them for carrying out services required for the construction of the works. Documents are only to be used for the contract. Maintain confidentiality of documents.

KDC - Approved Building Consent Document - BC210441 - Pg 188 of 336 - 30/08/2021 - ComplyNZ

1238 AS BUILT DOCUMENTATION

1 GENERAL

This general section relates to common requirements for the preparation, submission and review of as built documentation referred to within this specification and referred to within separate specifications/documents relating to this project. Detailed requirements for as built documentation for particular parts of the work may be included in specific work sections.

KDC - Approved Building Consent Document - BC210441 - Pg 189 of 336 - 30/08/2021 - ComplyNZ

1.1 SCHEDULE SECTION

Refer to 1238S1 SCHEDULE OF AS BUILT DOCUMENTATION for work sections contained in this specification that have requirements for as built documentation.

1.2 AS BUILT DOCUMENT REQUIREMENTS

Where requirements for the as built documents and records are not stated in a specific section, they shall include:

As built drawings recording:

- The actual positions as constructed of all sewer, stormwater, sanitary plumbing, piped and ducted services, electrical and mechanical services.
- Inverts and locations of services at key points within the building and at the property lines.
- Dimension services in relation to the structure and building grid lines.
- Ductwork, piping, conduit and equipment, including such items provided for future use.
- Depth of various elements of foundations in relationship to the ground floor level
- Field changes of dimensions
- Other significant deviations and changes which are concealed in construction and cannot be identified by visual inspection
- Access doors and panels

Records of:

- Products and materials selected for alternatives specified
- Approved substitutions and accepted alternatives
- Other approved changes and deviations to items specified.

1.3 PROVISIONAL AS BUILT DOCUMENTS

Prior to practical completion provide provisional/draft as built documents in sufficient detail to allow the principal to operate, maintain, adjust and re-assemble the contract works and to allow for review by the reviewer. Where no named reviewer has been nominated, submit the as built documentation to the contract administrator. Submit in hard copy and electronic form.

1.4 AS BUILT DOCUMENT REVIEW

As built document review indicates only that the reviewer is satisfied that the documents are legible. The review is not a check of the accuracy or completeness of the documents, however the reviewer may comment on any aspect of the documentation and require the documents to be revised and resubmitted. Review of as built documents does not relieve the contractor of responsibility for their correctness.
Where no time is stated in a specific section, allow 10 working days for review by the reviewer. Where a large amount of documentation is involved more time will be necessary.

1.5 COMPLETE AS BUILT DOCUMENTS

Prior to the end of the defects notification/liability period, provide complete as built documents reflecting any review requirements, with all Information of good quality and properly titled, numbered, cross-referenced and dated. Provide documents in sufficient detail to allow the principal to operate, maintain, adjust and re-assemble the contract works. Submit in hard copy and electronic form to the contract administrator.

1.6 AS BUILT DOCUMENTS - ELECTRONIC COPY

Provide an electronic copy of the as built documents in the following format:

Drawings:	PDF format (in addition provide DWG files if available)
Other documents:	PDF format

1239 OPERATION & MAINTENANCE

1 GENERAL

This general section relates to operation and maintenance (O&M) documentation referred to within this specification and referred to within separate specifications/documents relating to this project. This documentation is required by the principal so that they can operate and maintain the contract works.

KDC - Approved Building Consent Document - BC210441 - Pg 190 of 336 - 30/08/2021 - ComplyNZ

1.1 SCHEDULE SECTION

Refer to 1239S1 SCHEDULE OF OPERATION & MAINTENANCE INFO for work sections contained in this specification that have requirements for:

- Information for operation and maintenance
- Operation and maintenance manuals
- Maintenance contract proposals

Operation and maintenance documents

1.2 OPERATION AND MAINTENANCE INFORMATION - BUILDING ACT

Provide in writing the information and documentation prescribed by regulations made under the Building Act, to the owner/principal and the relevant territorial authority.

1.3 OPERATION AND MAINTENANCE INFORMATION

Provide operation and maintenance documentation necessary to operate and maintain the works. This documentation is to include:

- Contractors name and contact details.
- A complete list of subcontractors' names, addresses and telephone numbers noting which portions of the contract each provided.
- A complete list of equipment and appliances including serial numbers, manufacturers' names and sources of supply.
- Copies of all manufacturers' and suppliers' product literature containing maintenance requirements/instructions, for any products in the building work.
- Information for operation and maintenance as required by work sections.
- Operation and maintenance manuals as required by work sections.
- Maintenance contract proposals as required by work sections.
- Final as built documents.
- Originals of all warranties and guarantees properly executed.
- Other information listed or referred to in this general section.
- Operation and maintenance information required by other project documents.

1.4 MAINTENANCE REQUIREMENTS

Provide details of any maintenance requirements required by the Building Act. In addition provide maintenance requirements for items including:

- Details of suggested building washing programme.
- Details of suggested re-painting programme.
- Location of flushing points for sub soil drainage systems.
- Location of surface water filter systems requiring regular cleaning.
- Overflow relief gully location and means of keeping charged.

1.5 APPLIANCE MANUALS AND OPERATING INSTRUCTIONS

Provide appliance manuals and operating information for all appliances including details of all isolating valves and switches including:

- Water supply isolating valve.
- Location of isolating valves for appliances including dishwasher, clothes washer and fridge with and icemaker connection.
- Gas supply isolating valve.
- Electrical main switch and all sub boards.
- Location of isolating switches for electrical appliances including cooker and cook top, kitchen extract system, electric under floor heating.
- Fire and heating device operating instructions.

1.6 SELECTIONS INFORMATION

Provide details of actual selections used in the construction of the works including:

- Tapware type and supplier details.
- Sanitary ware including accessories type and supplier details.
- Light fitting type and supplier details.
- Door hardware type and supplier details.
- Carpet type and colour including underlay and the supplier details.
- Vinyl flooring type and colour including supplier details.
- Overlay timber floor type and supplier details.
- Tile type and supplier details.
- Fire supplier details.
- Aluminium joinery system and finish.
- Paint type and colours used.

Include brochures and other information included with the items supplied.

1.7 SELECTIONS INFORMATION - SUBSTITUTIONS

Provide details of any selections used in the construction of the works that are different from what was specified.

Documentation format

1.8 O&M DOCUMENTATION FORMAT

Unless otherwise specified in a work section,

- Provide O&M drawings at scales appropriate to the detail to enable good legibility.
- Provide manufacturers documentation at the original scale.
- Provide written text generally in A4 format using a font not less than 10 point.

Submit O&M documentation in both hard copy and as electronic portable document format (PDF) files.

Submission and review

1.9 O&M DOCUMENTATION SUBMISSION & REVIEW

Unless otherwise specified in a work section, provide draft O&M documentation no later than the date of practical completion or the date on which the principal takes occupation of the works, whichever occurs first.

Submit O&M documentation to the named reviewer for review.

- Where no time is stated in a specific section, allow 10 working days for review by the reviewer. Where a large amount of documentation is involved more time will be necessary.
- Where no person is named in a specific section as the reviewer, submit the O&M documents to the contract administrator.
- Submit a proposed index system (as required for final documentation) to the contract administrator for review.

O&M review indicates only that the reviewer is satisfied that the documents are legible. The review is not a check of the accuracy of the documents, however the reviewer may comment on any aspect of the documentation and require the documents to be revised and resubmitted. Review of operation and maintenance documentation does not relieve the contractor of responsibility for the correctness of the documentation.

The reviewer may advise that:

- The O&M documentation has been reviewed and has been accepted without the need for further modification. The information can be included in the final documentation; or
- The O&M documentation has been reviewed and the information can be included in the final documentation subject to revision required by notes, annotations or comments provided; or
- The O&M documentation has been reviewed and is not acceptable, refer to notes, annotations or comments provided. Resubmit corrected/altered documentation for review.

Amalgamate the reviewed accepted and corrected O&M documentation into the final O&M documentation

Final documentation

KDC - Approved Building Consent Document - BC210441 - Pg 191 of 336 - 30/08/2021 - ComplyNZ

1.10 SUBMISSION OF FINAL DOCUMENTATION

Prior to the end of the defects notification/liability period, provide complete O&M documentation in both hardcopy and electronic form.

1.11 FINAL O&M DOCUMENTATION - HARDCOPY

Provide the hard copy version of the O&M documentation in a loose-leaf binder with a contents index identifying operation and maintenance documents, requirements, manuals, operating instructions and selections. In addition include the project name, contractor's name and the date of practical completion on the index page.

Include indexed sections to identify all operation and maintenance manuals that are not contained within the binder. Provide a copy of the front cover or other identifying feature of the manual within the section with a note stating "this manual has been provided separately".

Provide a title on the binder edge "Operation and maintenance instructions for (project name)". If more than one binder is required identify each binder by number and ranking (e.g. Volume 2 of 3) and group information logically between the binders for ease of reference.

Provide operation and maintenance manuals clearly and neatly marked on the spine or front cover so as to identify the project name. Where operation and maintenance manuals are a collection of loose leaf documentation, provide documentation in a loose-leaf binder as described above.

1.12 FINAL O&M INFORMATION - ELECTRONIC COPY

Provide a copy of all hardcopy information in PDF format arranged in logical named folders. In addition provide DWG files of documentation if available.

1.13 REVIEW OF FINAL DOCUMENTATION

The contract administrator may review the final documentation and require alteration and resubmission.

2 SELECTIONS

O&M Documentation

2.1 FINAL DOCUMENTATION - INFORMATION FOR OPERATION AND MAINTENANCE

Provide a complete electronic copy to the contract administrator.

Provide two hardcopy sets of completed O&M documentation to the contract administrator. At least one set is to contain all available original documentation. The contractor is to retain a third hardcopy set for their records.

Provide any documentation (including required original documentation) as required to the relevant territorial authority.

2.2 FINAL DOCUMENTATION - OPERATION AND MAINTENANCE MANUALS

Provide a complete electronic copy to the contract administrator.

Provide two hardcopy sets of completed maintenance manuals to the contract administrator. At least one set is to contain all available original documentation. The contractor is to retain a third hardcopy set for their records.

Provide any documentation (including required original documentation) as required to the relevant territorial authority.

Maintenance contract proposals

2.3 MAINTENANCE CONTRACT PROPOSALS

Unless otherwise specified in a work section, provide maintenance contract proposals to the contract administrator no later than the date of Practical Completion. Provide in electronic and hardcopy form.

KDC - Approved Building Consent Document - BC210441 - Pg 192 of 336 - 30/08/2021 - ComplyNZ

1270 CONSTRUCTION

1 GENERAL

This GENERAL section relates to common requirements for construction issues including:

- Quality control and assurance
- Noise and nuisance
- Set-out and tolerances
- Common execution requirements
- Qualifications
- Common product requirements
- Common requirements for samples and prototypes
- Common requirements for spare and maintenance products
- Cleaning during the works
- Removal of protection
- Completion requirements
- Commissioning
- Practical completion submission
- Defects period submissions
- Completion submissions

KDC - Approved Building Consent Document - BC210441 - Pg 193 of 336 - 30/08/2021 - ComplyNZ

1.1 SCHEDULE SECTION

Refer to 1270S1 SCHEDULE OF SAMPLES & PROTOTYPES for work sections contained in this specification that have requirements for samples and prototypes.

Refer to 1270S2 SCHEDULE OF SPARES & MAINTENANCE PRODUCTS for work sections contained in this specification that have requirements for spares and maintenance products.

Quality control and assurance

1.2 QUALITY ASSURANCE

Carry out and record regular checks of material quality and accuracy, including:

- Concrete quality and finish.
- Dimensional accuracy of structural column locations (following completion of foundations).
- All perimeter columns and frames for plumb.
- Levels of all floors relative to the site datum.
- Framing timber moisture content.

Where any material, quality or dimension falls outside specified or required tolerances, obtain written direction from the contract administrator. Where building consent approval is affected, confirm remedial action with the Building Consent Authority.

Provide all materials, plant, attendances, supervision, inspections and programming to ensure the required quality standards are met by all project personnel.

1.3 NOTICE

Give notice to the contract administrator and any other nominated person of hold points and notification points. Refer to work sections and 1260 PROJECT MANAGEMENT for hold points and notification points required.

1.4 NOTIFIABLE WORK

Lodge notice of the intention to commence any notifiable work and any work that will at any time include any notifiable work, in accordance with Health and Safety in Employment Regulations 1995.

Noise and nuisance

1.5 LIMIT CONSTRUCTION NOISE

Minimise the effects of noise generation by including in the planning of the work such factors as placing of plant, programming the sequence of operations and other management functions. Limit construction noise to comply with the requirements of NZS 6803, the requirements of the Resource Management Act sections 326, 327 and 328 and the Health and Safety in Employment Regulations 1995 clause 11.

1.6 ACCEPTABLE NOISE LEVELS

Refer to NZS 6803 Tables 2 and 3 for the upper limits of construction work noise received in residential zones, dwellings in rural areas, industrial areas and commercial areas, note also the allowed adjustments. Do not exceed these limits or any limits imposed by regional councils or territorial authorities.

1.7 PROVIDE INFORMATION TO NEIGHBOURS

Provide information to neighbours of any noise generation from the site liable to constitute a problem. Explain to them the means being used to minimise excessive noise and establish with them the timings most suitable for the noise generating work to be carried on.

Discuss with any complainant the measures being used to minimise noise. Where possible modify these measures to accommodate particular circumstances. Finally, determine the sound level at the location under discussion using methods and observation reporting as laid down in NZS 6803. If the noise level is above the upper limits of NZS 6803, table 2 and table 3, cease the noise generating operation and remedy the problem.

1.8 ROADWAY AND FOOTPATH

Keep the adjacent footpath and road clear at all times. Where work must be carried out in the roadway or footpath, obtain required consents from the territorial authority. Where temporary use is made of the footpath or roadway for deliveries and the like ensure that public safety is protected and the goods and materials moved as soon as practicable. Sweep, wash and otherwise clean the roadway/footpath and restore it to its previous condition.

1.9 VEHICLE CROSSING

Make good damage that has occurred as a result of carrying out the contract works. Where there has been significant damage, contact the territorial authority and obtain instructions for making good. Pay the territorial authority costs associated with making good.

1.10 DIRT AND DROPPINGS

Remove dirt and droppings deposited on public or private thoroughfares from vehicles servicing the site to the satisfaction of the appropriate authorities and the contract administrator.

1.11 DAMAGE AND NUISANCE

Take precautions to prevent damage and nuisance from water, fire, smoke, dust, rubbish and all other causes resulting from the construction works.

1.12 SMOKE FREE REQUIREMENTS

In accordance with the Smoke Free Environments Act 1990 smoking is not allowed on site.

1.13 RESTRICTIONS

Do not:

- light rubbish fires on the site.
- bring dogs on to or near the site.
- bring radios/audio players on to the site.

Set-out and tolerances

1.14 SURVEY INFORMATION

Locate and verify survey marks and datum points required to set out the works. Where these do not exist or cannot be located advise the contract administrator who will arrange for the required points to be established.

Record and maintain their position. Re-establish and replace disturbed or obliterated marks.

1.15 DATUM

Establish a permanent site datum to confirm the proposed levels and their relationship to all other existing and new levels.

1.16 SET-OUT

Set out the work to conform with the drawings.

1.17 USE OF SET-OUT INSTRUMENTS

Permit without charge, the use of instruments already on site for checking, setting out and levels.

KDC - Approved Building Consent Document - BC210441 - Pg 194 of 336 - 30/08/2021 - ComplyNZ

1.18 CHECK DIMENSIONS

Check all dimensions both on drawings and site, particularly the correlation between components and work in place. Take all dimensions on drawings to be between structural elements before linings or finishes, unless clearly stated otherwise.

1.19 TOLERANCES

All work to be level, plumb, and true to line and face. Unless otherwise specified in specific work sections of this specification, tolerances for structural work shall comply with the following:

Concrete construction:	To NZS 3109 Concrete construction Clause 3.9 Tolerances for reinforcement Table 5.1 Tolerance for precast components Table 5.2 Tolerance for in situ construction To NZS 3114 Concrete surface finishes
Masonry construction:	To NZS 4210 Masonry construction: Materials and workmanship Clause 2.6.5 Tolerances Table 2.2 Maximum tolerances
Structural steelwork:	To NZS 3404.1 Steel structures standard Section 14.4 Tolerances (after fabrication) Section 15.3 Tolerances (erection)
Timber framing:	To NZS 3604 Timber-framed buildings Clause 2.2 Tolerances Table 2.1 Timber framing tolerances

Refer to work sections for tolerance requirements for finishes.

Execution

1.20 EXAMINE PREVIOUS WORK

Before commencing any part of the work carefully examine the previous work on which it depends, to ensure it is of the required standard.

1.21 REPORT DEFECTIVE PREVIOUS WORK

Refer defects to the contractor to be remedied, if the remedy is outside the scope of the contract documents the contractor shall obtain direction from the contract administrator. Do not carry out work over previous work that is defective and will affect the required standard.

1.22 EXECUTION GENERALLY

Construct the work in accordance with the documents issued for construction including any direction that may have been given by the contract administrator that varies the construction document.

1.23 EXECUTION - NO DETAIL IS PROVIDED

The documents issued for construction will not include all details relating to every material, junction and interface with other materials.

Where the detail provided is of a general nature, or where no detail is provided, refer to the manufacturer's documents for information relating to installation and execution of that part of the work.

Where there is more than one method or detail appropriate to the part of the work in question, refer the options to the Contract Administrator for direction as to which detail or method to use.

1.24 EXECUTION - ACCEPTABLE SOLUTION IS REFERRED TO

Where a NZBC Acceptable Solution is referred to in the specification but not shown on the plans, obtain a copy of that Acceptable Solution and make it available to the workers carrying out that part of the work.

1.25 MINIMISE DELAYS DUE TO WEATHER

Use appropriate techniques and methods to prevent damage and minimise delays due to weather.

Defective or damaged work

KDC - Approved Building Consent Document - BC210441 - Pg 195 of 336 - 30/08/2021 - ComplyNZ

1.26 DEFECTIVE OR DAMAGED WORK

Repair defective, damaged and marked elements, or replace them where repair is not possible or will not be acceptable. Adjust operation of equipment and moving parts not working correctly. Refer to individual work sections for any special requirements.

Qualifications

1.27 QUALIFICATIONS GENERALLY

The work is to be carried out by workers and / or supervisors who are experienced, competent and familiar with the materials and the techniques specified. Workers must also be familiar with the manufacturers' and suppliers' installation and application instructions and standard details provided by them in relation to the use of the products for this project. If requested provide evidence of qualification / experience.

1.28 QUALIFICATIONS WORKERS – RESTRICTED BUILDING WORK

Where restricted building work (RBW) forms part of the contract works, workers, or supervisors of that work must be licensed building practitioners (LBP) holding current licenses for the particular restricted building work.
For rare instances where non-RBW also requires an LBP refer to individual work sections for details.

1.29 QUALIFICATIONS WORKERS – MANUFACTURER / SUPPLIER REQUIREMENTS

Where required by a manufacturer or supplier, workers must be specifically trained /approved / accredited / registered / licensed / certified by them. Refer to individual work sections for details.

1.30 QUALIFICATIONS WORKERS – LICENSED UNDER STATUTE

Where workers and / or supervisors of work are required to be licensed, registered or similar under legislation, they must have a current license before they start the work and maintain currency until their part of the work has been completed and all documentation that is required has been provided.

1.31 QUALIFICATIONS WORKERS – INDUSTRY QUALIFICATION REQUIREMENTS

Where workers and / or supervisors of work are required to be trained / licensed / certified or similar under industry rules or contractual requirements, they must have a current qualification before they start the work and maintain currency until their part of the work has been completed. Refer to individual work sections for details.

1.32 QUALIFICATIONS – PRODUCER STATEMENTS

Where producer statements are required for parts of the work, ensure that person is suitably qualified and authorized to issue such producer statements.

1.33 REPLACEMENT OF PERSON

Should it be necessary to replace a person, ensure that records of work, producer statements, warranties and the like required for the part of the work they have carried out are obtained.

Ensure that the replacement person takes responsibility for the work they carry out and that they are able to provide such records of work, producer statements, warranties and the like required as a condition of the contract and the building consent.

Products

1.34 NEW PRODUCTS

Products to be new unless stated otherwise, of the specified standard, and complying with all cited documents.

1.35 COMPATIBILITY OF PRODUCTS

Ensure all parts of a construction or finish are compatible and their individual use approved by the manufacturers and suppliers of other parts of the system. Source all parts of a system from a single manufacturer or supplier.

KDC - Approved Building Consent Document - BC210441 - Pg 196 of 336 - 30/08/2021 - ComplyNZ

1.36 DELIVERY, STORAGE & HANDLING OF PRODUCTS

Protect products during transit and delivery on site and / or off site. Reject and replace goods that are defective or damaged or will not provide the required finish.

Handle products carefully to avoid damage and distortion and in accordance with codes of practice and the manufacturer's or supplier's requirements. Avoid any contact with potentially damaging surfaces or conditions.

Store products to avoid visual damage, environmental damage, mechanical damage and distortion. Store in accordance with codes of practice and the product manufacturer's or supplier's requirements. Maintain the proper condition of any protective packaging, wrapping and support.

Refer to individual work sections for any special requirements.

1.37 SUBSTRATE CONDITIONS

Ensure substrate conditions are within the manufacturer's or supplier's stated guidelines both before and during the installation of any material, product or system. Obtain written instructions on the necessary action to rectify unsatisfactory conditions.

1.38 INSTALLING PRODUCTS

Install in accordance with the manufacturer's or supplier's technical literature. Ensure that all installers are familiar with the required substrate conditions and the manufacturer's or supplier's specified preparation, fixing and finishing techniques.

1.39 COMPLY WITH STANDARDS

Comply with the relevant and/or cited Standard for any material or component. Obtain certificates of compliance when requested by the contract administrator.

1.40 CONDITION OF PRODUCTS

To be in perfect condition when incorporated into the work.

1.41 INCOMPATIBLE PRODUCTS

Separate incompatible materials and metals with separation layers, sleeves or gaskets of plastic film, bituminous felt or mastic or paint coatings, installed so that none are visible on exposed surfaces.

Samples

1.42 SAMPLES FOR REVIEW

Where specified in the work sections submit samples and any nominated supporting documentation to the named reviewer and notify the contract administrator of the submission. Where no person is named as the reviewer, submit to the contract administrator.

Samples for review may be described as a portable sample for review, portable control sample, fixed sample for review or fixed control sample. A portable sample refers to a sample that is easily movable, convenient for carrying. A fixed sample refers to a sample that is not portable. If the location of a fixed sample is not defined in the work section, obtain direction from the contract administrator.

For samples that are located on site, or by agreement with the contract administrator are located off site, notify the reviewer and contract administrator of their location and availability for review.

Timing for the provision and review of samples is to be included in the contract programme. Where no time is stated in a work section allow 10 working days for each review. Allow for such resubmission and further review as may be required. No extension of time will be allowed for resubmission and further review.

Obtain written instructions in relation to the samples from the contract administrator. Do not proceed further with related work items until advised to continue.

Samples may be incorporated in the finished work if confirmed in writing by the contract administrator, otherwise allow to completely remove any fixed samples. Remove from the site any rejected samples.

Refer to SAMPLES clauses in work sections for further detail.

KDC - Approved Building Consent Document - BC210441 - Pg 197 of 336 - 30/08/2021 - ComplyNZ

1.43 CONTROL SAMPLES

Samples become control samples if an instruction is given by the contract administrator to that effect. Control samples will be used for comparison purposes throughout the contract. Control samples may be portable or fixed in place, refer to SAMPLES clauses in work sections for further detail.

Control samples that are to remain on site, or otherwise in the care of the contractor, are to be maintained in original condition.

If confirmed by the contract administrator, fixed control samples may be incorporated in the finished work, otherwise allow to remove fixed control samples from site when instructed by the contract administrator.

1.44 OTHER SAMPLE REQUIREMENTS

Where specified in the work sections obtain samples for the purposes described.

Prototypes

1.45 PROTOTYPES - TESTING

Where specified in the work sections provide and test prototypes. Timing for the provision, testing, disassembling, re-assembling, retesting and review of prototypes and test results is to be included in the contract programme. Where no time is stated in a work section allow 10 working days for each review of test results. Submit test results to the named reviewer and to the contract administrator. Where no person is named as the reviewer submit test results to the contract administrator.

Obtain written instructions in relation to the prototype from the contract administrator. Do not proceed further with related work items until advised to continue.

Refer to PROTOTYPES - TESTING clauses in work sections for further detail.

1.46 PROTOTYPES - REVIEW

Where specified in the work sections provide prototypes for review. Timing for the provision, disassembling, re-assembling and review of prototypes is to be included in the contract programme. Where no time is stated in a work section allow 10 working days for review by the named reviewer. Where no person is named as the reviewer notify the contract administrator for direction.

Obtain written instructions in relation to the prototype from the contract administrator. Do not proceed further with related work items until advised to continue.

Refer to PROTOTYPES - REVIEW clauses in work sections for further detail.

1.47 PROTOTYPES - GENERAL

Refer to the PROTOTYPES - TESTING and PROTOTYPES - REVIEW clauses in work section for details on what is to happen after the review and or testing of the prototype is complete. Where no information is provided refer to the contract administrator for direction.

Prototypes may become control samples if an instruction is given by the contract administrator to that effect.

Spares & maintenance products

1.48 SPARES & MAINTENANCE PRODUCTS

Collect, protect, package, label and store safely all spares and maintenance products specified in the work sections. Give the contract administrator an inventory of all spares and maintenance products.

If no instruction is given within a work section for the location of spares and maintenance products, then deliver to the owner .

If no instruction is given within a work section for timing in relation to the provision of spares and maintenance products, then provide at practical completion.

Refer to SPARES & MAINTENANCE PRODUCTS clauses in work sections for further detail.

Cleaning during the works

KDC - Approved Building Consent Document - BC210441 - Pg 198 of 336 - 30/08/2021 - ComplyNZ

1.49 PERIODIC SITE CLEANING

Carry out periodic site cleaning during the contract period. Place waste material in appropriate storage pending removal from the site. Keep food waste separate from construction waste.

1.50 TRADE CLEANING

Keep the work area clean, remove of all debris, unused and temporary materials and elements from the site as work progresses and on completion. Refer to individual work sections for any specific requirements.

KDC - Approved Building Consent Document - BC210441 - Pg 199 of 336 - 30/08/2021 - ComplyNZ

Remove protection

1.51 REMOVE PROTECTION

Remove all temporary markings, labels, packaging and coverings to products unless instructed otherwise, or where they are required for protection.

Maintain temporary protection until removal is required by the manufacturer/supplier, the execution of the work or the requirements of individual work sections. Re-establish protection as necessary.

Remove temporary protection and special protection immediately prior to practical completion or before when there is no further risk of damage.

Refer to individual work sections for any special removal requirements.

Completion

1.52 SPECIAL REQUIREMENTS

Refer to individual work sections for any special completion requirements.

1.53 LEAVE WORK

Leave work to the standard required for the following procedures.

1.54 COMPLETION - TESTS & CERTIFICATION

Carry out tests as detailed in the work sections. If testing identifies a failure to meet performance requirements, notify the contract administrator and any nominated recipient, identify and correct the cause of failure and repeat the test. Submit test results and certification documentation to the contract administrator and any nominated recipient.

1.55 REMOVE CONSTRUCTION WASTE

Remove all debris, unused materials and the like from the site. Arrange for material to be recycled to be collected or delivered to the recycler.

1.56 COMPLETE ALL SERVICES

Ensure all services are complete and operational, with all temporary labelling removed, required labelling fixed and service instructions provided.

1.57 CLEANING BY CONTRACTOR

Clear the contract works of all construction materials, waste, dirt and debris. Clean the contract works including:

- Wipe all surfaces to remove construction dust.
- Clean out service ducts and accessible concealed spaces.
- Clean out all gutters and rainwater heads.
- Wipe dust from both sides of glass. Take particular care when removing paint or cementitious materials to not damage the glass. Do not use metal scrappers that may damage the glass.
- Remove adhesive residue left by labels and other temporary protection/markings.
- Clean out the interior of all cabinetry.
- Wash down external concrete including driveways and concrete masonry. Take care when waterblasting to not cause damage to the surface or allow water to enter the building.
- Remove rubbish and building material from the area immediately adjacent to the contract works.

1.58 CLEANING BY COMMERCIAL CLEANER

In addition to cleaning carried out by the contractor, use a commercial cleaning company to clean the whole of the interior of the building, including all appliances, equipment, fittings, surfaces and finishes to leave it without any blemish. Cleaning to include:

- Clean and wash down all external surfaces to remove dirt, debris and marking.
- Clean all interior surfaces including cabinetwork, joinery, sanitary and hardware items.
- Clean all floor finishes.
- Clean and polish all glass, both sides. Take particular care when removing paint or cementitious materials to not damage the glass. Do not use metal scrappers that may damage the glass.

Commissioning

1.59 SPECIAL REQUIREMENTS

Refer to individual work sections for any special commissioning requirements.

1.60 MOVING PARTS

Adjust, ease and lubricate all doors, windows, drawers, hardware, appliances, controls and all moving parts to give easy and efficient operation.

1.61 COMMISSIONING - TESTS & CERTIFICATION

Carry out tests as detailed in the work sections. If testing identifies a failure to meet performance requirements, notify the contract administrator and any nominated recipient, identify and correct the cause of failure and repeat the test. Submit test results and certification documentation to the contract administrator and any nominated recipient.

1.62 INSTRUCTION AND DEMONSTRATION

Provide instruction and demonstration to the owner/occupier to the extent that is listed below and as required for them to reasonably occupy and use the building. This is to include at least the following:

- Location and isolation of all services connections.
- Operation of all emergency systems.
- Locking and security arrangements.
- Operation of basic building services including lighting, heating, mechanical ventilation, air conditioning and security.
- Special cleaning requirements and procedures.
- Any other features that the owner/occupier needs to know about.

1.63 SECURITY AT COMPLETION

Remove any temporary lock cylinders and complete final keying prior to handing over keys to the principal on completion of the works. Leave the works secure with all accesses locked. Account for all keys/cards/codes and hand to the principal along with an itemised schedule, retaining a duplicate schedule signed by the principal as a receipt.

Practical completion submission

1.64 ADDITIONAL PRACTICAL COMPLETION INFORMATION

In addition to requirements in the contract and contained elsewhere in the specification provide the following information submissions for practical completion:

- All documents which the contractor has obtained on behalf of the owner/occupier.
- Information required by the owner/occupier to be able to use the building.
- Advice that NUO accounts in the contractor's name have been closed and as appropriate changed to be in the name of the owner/occupier.
- A list of persons to be contacted to carry out any emergency or remedial work including 24 hour/7 day contact details.

1.65 ADDITIONAL PRACTICAL COMPLETION REQUIREMENTS

Refer to the conditions of contract for the definition of practical completion and the conditions relating to practical completion.

Defects period submissions

KDC - Approved Building Consent Document - BC210441 - Pg 200 of 336 - 30/08/2021 - ComplyNZ

1.66 DEFECTS REMEDIATION - SUBMISSIONS

Provide the following at periods required by the contract administrator, where no period is stated, provide this information monthly:

- A copy of the contractor's check list identifying remaining defects and omissions to be completed recording progress made in completing and correcting the items.
- A copy of lists issued by the principal/employer identifying omissions and defects recording progress made in completing and correcting the items.
- A copy of lists issued by the contract administrator identifying omissions and minor defects recording progress made in completing and correcting the items.

Completion submissions

1.67 FINAL COMPLETION - SUBMISSIONS

In addition to requirements in the contract and contained elsewhere in the specification provide:

- Contractors advice that all defects have been corrected and omissions and deferred work completed.
- All documents which the contractor has obtained on behalf of the owner/occupier.

KDC - Approved Building Consent Document - BC210441 - Pg 201 of 336 - 30/08/2021 - ComplyNZ

2210 PREPARATION & GROUNDWORK

1 GENERAL

This section relates to the clearance, excavation and backfilling of the site area in preparation for:

- footings and floor slabs
- backfilling behind basement retaining walls

Documents

1.1 DOCUMENTS

Refer to the general section 1233 REFERENCED DOCUMENTS. The following documents are specifically referred to in this section:

NZS 3604	Timber-framed buildings
WorkSafe	Good Practice Guidelines - Excavation Safety

1.2 SPECIFIER DOCUMENTS

Specifier's documents relating to this part of the work:
Wiley Geotechnical Report

Specifier's contact details;

Company:	Wiley Geotechnical
Web:	https://www.wileygeotechnical.co.nz
Telephone:	09-431 5353

1.3 SITE SAFETY

Provide adequate support for all excavations. Cover holes and fence off open trenches and banks.

1.4 ARCHAEOLOGICAL DISCOVERY

If fossils, antiquities and other items of value are found refer to the general section 1220 PROJECT for actions to be taken with archaeological discovery.

2 PRODUCTS

2.1 EXCAVATED CLEAN FILL

Clean, free of contamination, mineral soil from other formations in the excavation which may be selected and approved as suitable for filling by having grading and moisture content properties that will allow recompaction to 95% of maximum density.

2.2 VOLCANIC TUFF FILL

Scoriaceous tuff of variable grading excluding excessive silt or clay material, capable of being placed and compacted as specified.

2.3 ROCK FILL

Hard material comprising rock, broken stone, hard brick, concrete, run of pit scoria, or other comparable inert material capable of being placed and compacted as specified.

2.4 SAND FILL

Clean sand of such grading in particle size to achieve mechanical compaction to 90% maximum density.

2.5 HARD FILL

Scoria or crushed rock to GAP (General All Passing) 40 grading.

2.6 GRANULAR FILL

Approved screened crushed gravel or scoria, graded in size from 20mm to 7mm, clean. When tested with a standard sieve of 4.75 opening no material is to pass.

2.7 DRESSING COURSE

Scoria to GAP 20 grading, or "dirty footpath scoria", or equivalent "all in" graded crushed metal aggregate.

KDC - Approved Building Consent Document - BC210441 - Pg 202 of 336 - 30/08/2021 - ComplyNZ

2.8 FREE-DRAINING AGGREGATE

Scoria or crushed gravel graded 50 to 14 clean.

3 EXECUTION

3.1 WASHOUT BAY FOR TRUCK

Provide a designated area for trucks to be washed down to avoid mud and dirt being carried off site.

3.2 EXCAVATION GENERALLY

Carry out excavation, using plant suitable for the purpose, to the guidelines set by the WorkSafe, Good Practice Guidelines - Excavation Safety.

3.3 BURNING OF MATERIALS

Burning of materials is not permitted on site.

3.4 PROTECT EXISTING WORK

Protect from damage existing buildings, structures, roads, paving and services nominated on the drawings as being retained.

3.5 EROSION CONTROL

Ensure measures are in place to contain silt dislodged as a result of water infiltration and to prevent it being carried off site with stormwater.

3.6 SURFACE PREPARATION

Comply with NZS 3604, section 3.5, **Site preparation**. Remove all turf, vegetation, trees, topsoil, stumps, uncontrolled fill and rubbish from the area to be built on.

3.7 STOCKPILE TOPSOIL

Stockpile excavated topsoil on site where directed. Keep separate from other excavated materials. Spread and level where directed before completion of the works.

3.8 GENERAL EXCAVATION

Trim ground to required profiles, batters, falls and levels. Remove loose material. Protect cut faces from collapse. Keep excavations free from water.

3.9 ROCK EXCAVATION

If rock is found at any level above the underside of the structural foundations, or above required base levels for site service trenches, immediately notify the owner. Obtain written instructions from the owner on the proposed approach to rock excavation, or consequent alterations to subgrade construction. Confirm any changes with the territorial authority.

3.10 FOUNDATION EXCAVATION

Take foundation excavations to depths shown. Keep trenches plumb and straight, bottoms level and free of soft spots, stepped as detailed and clean and free of water.

3.11 INADEQUATE BEARING

If localised bearing is not to NZS 3604, 3.1.2 **Foundations** and 3.1.3 **Determination of good ground**, then excavate further and backfill with material as follows:

- Below slabs on grade: Hardfill compacted in 150mm layers
- Below footings: 10 MPa concrete

If excavation exceeds the required depths, backfill and compact to the correct level with material as listed.
Confirm any changes with the territorial authority.
For inadequate bearing or over excavation of service trenches, use hardfill compacted in 150mm layers.

3.12 STANDARD OF COMPACTION

Place fill in layers of not more than 150mm and compact to achieve 95% of maximum dry density. For granular fill material, the fill shall be compacted to 80% of saturated dry density.

3.13 GRANULAR BASE FOR SLABS

To conform to NZS 3604, section 7.5.3, **Granular base**. Consolidate with a vibrating roller. Blind the surface with 20mm of coarse sand or sand/cement and roll ready to receive a damp-proof membrane.

KDC - Approved Building Consent Document - BC210441 - Pg 203 of 336 - 30/08/2021 - ComplyNZ

3.14 GENERAL BACKFILLING

Obtain written confirmation from the owner before using any excavated material. Compact approved backfilling in 150mm layers with the last 200mm in clean topsoil, lightly compacted and neatly finished off.

3.15 SURPLUS MATERIAL

Remove surplus and excavated material from the site.

KDC - Approved Building Consent Document - BC210441 - Pg 204 of 336 - 30/08/2021 - ComplyNZ

3155FR FIRTH RIBRAFT® FLOOR SYSTEMS

1 GENERAL

This section relates to the supply and installation of **Firth Industries** RibRaft® floor system and RibRaft® X-Pod® floor system.
It includes:

- a nonspecific design reinforced concrete waffle raft floor slab-on-ground (RibRaft®) system.
- a specific design reinforced concrete waffle raft floor slab-on-ground RibRaft® X-Pod® floor system.
- a RibRaft® floor system incorporating an integrated thermal edging, HotEdge®.

KDC - Approved Building Consent Document - BC210441 - Pg 205 of 336 - 30/08/2021 - ComplyNZ

1.1 ABBREVIATIONS AND DEFINITIONS

Refer to the general section 1232 INTERPRETATION & DEFINITIONS for abbreviations and definitions used throughout the specification.

The following definitions apply specifically to this section:

ACRS	Australian Certification Authority for Reinforcing Steels - An independent certification scheme for reinforcing steel and structural steel, by product and manufacturer/processor. Certifies compliance with Australia/New Zealand Standards. ACRS Web site - www.steelcertification.com

Documents

1.2 DOCUMENTS

Refer to the general section 1233 REFERENCED DOCUMENTS. The following documents are specifically referred to in this section:

NZBC B1/VM1	Structure
NZBC B1/AS1	Structure
NZBC G13/AS1	Foul Water
NZS 3104	Specification for concrete production
NZS 3109	Concrete construction
NZS 3114	Specification for concrete surface finishes
NZS 3604	Timber-framed buildings
NZS 3631	NZ Timber grading rules
NZS 4229	Concrete masonry buildings not requiring specific engineering design
AS/NZS 4671	Steel reinforcing materials

Documents listed above and cited in the clauses that follow are part of this specification. However, this specification takes precedence in the event of it being at variance with the cited document.

1.3 MANUFACTURER/SUPPLIER DOCUMENTS

Manufacturer and supplier documents relating to this part of the work:
Firth RibRaft® Floor System Manual **
Firth RibRaft® Technical Manual January 2020
Firth RibRaft® Flooring Solutions (Introductory brochure)
Firth RibRaft® HotEdge® installation manual
Firth RibRaft® X-Pod® Brochure (Introductory brochure)
Firth RibRaft® X-Pod® Structural Design Guide
CodeMark™Bureau Veritas CM70056 - RibRaft® Floor System

** A copy of this manual must be held on site.

Manufacturer/supplier contact details

Company:	**Firth Industries**
Web:	www.firth.co.nz
Email:	info@firth.co.nz
Telephone:	0800 FIRTH1 (0800 347841)

Further information and/or names of tradespeople who have installed Firth RibRaft® floors are available by phoning Firth Information Service 0800 347841.

Requirements

1.4 NO SUBSTITUTIONS

Substitutions are not permitted to any specified Firth RibRaft® Floor System and Firth RibRaft® X-Pod® Floor System product or component, or associated Firth products.
Concrete used for the construction of Firth RibRaft® Floor System and Firth RibRaft® X-Pod® Floor Systems must be supplied by Firth. RibRaft® & RibRaft® X-Pod® formers are only available from Firth Industries and are only supplied on a project with confirmation of an order for Firth Concrete.

1.5 QUALIFICATIONS

Tradespeople to be competent, experienced, and familiar with the Firth RibRaft® Floor System and Firth RibRaft® X-Pod® Floor System materials and techniques specified.

1.6 STEEL REINFORCING COMPLIANCE

Steel reinforcing materials for concrete to AS/NZS 4671. Steel to be manufactured in New Zealand, or by an overseas manufacturer holding a current valid (or equivalent) NZ S Mark or ACRS certificate for that type of steel. Confirm compliance and provide evidence if requested.

1.7 QUALITY RECORDS

Keep accurate records relating to strength and quality of materials used during construction. Include records of workmanship during construction and photographs of as-built details. Make the information available to the Building Consent Authority inspector on request.

Performance

1.8 COMPLIANCE - RIBRAFT® FLOOR SYSTEM

RibRaft® Floor System meets the requirements of the CodeMark® certificate CodeMark™Bureau Veritas CM70056 when used within the conditions and limitations of its Certificate of Conformity.
Achieves compliance with NZBC as follows:

- NZBC B1.3.1, 3.2, 3.3, B1.3.1, B1.3.3 (a,b,f,g,h,q,m), B1.3.4
- NZBC B2.3.1 (a), B2.3.1(a), B2.3.2(a)
- NZBC E2.3.3
- NZBC F2.3.1
- NZBC H1. 3.1 (refer to limitation c)

2 PRODUCTS

Materials

2.1 BLINDING

50mm maximum compacted GAP 7.

2.2 TIMBER FORMWORK

No. 2 framing and dressing or merchantable grade radiata pine boards to NZS 3631.

2.3 DAMP-PROOF MEMBRANE

0.25mm minimum polyethylene to NZS 3604: clause 7.5.4, Damp-proof membrane (DPM). Refer to SELECTIONS.

2.4 NORMAL CONCRETE - NON RIBRAFT® APPLICATIONS

Normal concrete 20 MPa grade, maximum aggregate size 19mm to NZS 3104 for concrete work where Firth Raftmix™ or Firth Raftmix™ Pump are not appropriate

2.5 REINFORCEMENT

Bars to AS/NZS 4671. Grade 500E deformed, other than for ties, stirrups, and spirals, unless shown otherwise on the drawings.

2.6 TYING WIRE

Mild drawn steel wire not less than 1.2mm diameter.

Materials – RibRaft® Floor System

2.7 POLYSTYRENE PODS FORMERS– RIBRAFT® FLOOR SYSTEM

Firth RibRaft® proprietary purpose made polystyrene pods.

KDC - Approved Building Consent Document - BC210441 - Pg 206 of 336 - 30/08/2021 - ComplyNZ

2.8 INTERNAL CORNER REINFORCEMENT – RIBRAFT® FLOOR SYSTEM

Minimum 2 x HD12 bars Grade 500E to AS/NZS 4671.

2.9 MESH – RIBRAFT® FLOOR SYSTEM

Welded reinforcing mesh to AS/NZS 4671 as modified by NZS B1/VM1, generally, Class E, minimum to NZBC B1/AS1 - Grade 500E, 2.27kg/m2 (1.14kg/m2 in each direction). Minimum SE62 500E mesh or the equivalent.

2.10 CONCRETE 25MPa - RIBRAFT® FLOOR SYSTEM

Firth Raftmix25, a 25 MPa 100mm slump mix in either 13mm or 19mm nominal aggregate size, supplied by Firth Industries. Firth Raftmix™ for direct placement and Firth Raftmix™ Pump for pump applications.

2.11 SPACERS

Firth proprietary spacers. Refer to SELECTIONS for size.

Components

2.12 INTEGRATED THERMAL EDGING PANELS

Firth RibRaft® HotEdge® panels, 25mm thick x 3m long pre-plastered Foamular® extruded foam sheets with ship-lapped joints at each end. Panels provide a minimum of R1.0 insulation to edge beam of RibRaft® floors. Panels are placed inside RibRaft® foundation boxing before Firth RaftMix™ concrete is poured, to form an integral part of the foundation.

RibRaft® HotEdge® components to complete the system are as follows:

- 60mm Tornado galvanized wire screws (steel mechanical connectors, to provide regular fixed anchor points into the edge beam)
- 45mm heavy duty powder coated external corner aluminium extrusion (length to suit the application)
- DanDam Foam Tape.

Refer to SELECTIONS for options.

3 EXECUTION

Conditions

3.1 DELIVERY, STORAGE & HANDLING OF PRODUCTS

Refer to 1270 CONSTRUCTION for requirements relating to delivery, storage, and handling of products.

3.2 ROUTINE MATTERS

Refer to 1250 TEMPORARY WORKS & SERVICES for protection requirements.
Refer to 1270 CONSTRUCTION for requirements relating to defective or damaged work, removal of protection and cleaning.

Application -General

3.3 SITE CLEARANCE

Clear the slab area of any vegetation and topsoil down to the subgrade level.

3.4 BUILDING PLATFORM

Create a building platform to a level surface to the required depth below finished floor level to suit the RibRaft® or RibRaft® Xpod system. Cut and/or fill sloping sites. Confirm finished floor level.

3.5 POST-CUT INSPECTION – RIBRAFT® FLOOR SYSTEM

Inspect and confirm that the soil conditions are as anticipated by the geotechnical investigation and report and conform to the requirements of the Firth RibRaft® manual. Refer to Firth RibRaft® Floor System Manual Section 1 - Design Information, 3.5 Foundation Soils.

3.6 TEMPORARY BUILDING PLATFORM DRAINAGE

Construct suitable drainage to keep excessive ground water off the building platform during and after construction as required.

KDC - Approved Building Consent Document - BC210441 - Pg 207 of 336 - 30/08/2021 - ComplyNZ

3.7 HARDFILL

Place hardfill and ensure it is spread and compacted with mechanical compaction.

3.8 BLINDING LAYER

Spread GAP 7 blinding layer to a minimum 500mm past the outside edge of the slab, compact to a level layer no greater than 50mm thick and no higher than 305mm below finished floor level.

3.9 FORMWORK

Construct formwork as required, well braced, and tied to remain in position, straight and plumb during construction. Ensure formwork will provide for the topping depth, including rebates and the required concrete finish.

3.10 INSTALL DAMP-PROOF MEMBRANE

Apply DPM to the prepared basecourse extending to the outside of all edge beams or fold and staple up the inside of the formwork. Overlap all joints in the DPM sheets a minimum 150mm. Tape laps and penetrations with 50mm wide pressure sensitive plastic tape. Ensure DPM is not damaged during the construction process. Repair all damage to DPM before proceeding with following procedures.

Application - RibRaft® floor system

3.11 PIPED SERVICES – BELOW SLAB INSTALLATION

Ensure piped and cabled underfloor services are installed in the subsoil or hardfill in locations as shown on the drawings and according to Firth RibRaft® floor system requirements. Refer to Firth RibRaft® Floor System Manual Section 2 - Installation Information, 3.4 Plumbing and Services.

3.12 PLACE POLYSTYRENE PODS

Place polystyrene pods in a regular waffle pattern using the spacers in the specified grid pattern to fit the floor plan. Cut pods on site with a saw or suitable hot wire as required. Cut holes for services and trim around piles as required on site.

3.13 INSTALL SPACERS

Install spacers and locations to the Firth RibRaft® floor system requirements.

Form standard ribs between pods using Firth 100mm spacers. Place the spacers at a minimum of one spacer along each edge of each pod or part pod. The ribs in both directions form a waffle pattern throughout the slab.

Form the edge beam using Firth 300mm spacers. Place the spacers at 1200mm centres maximum along the perimeter of the slab at least and one spacer per pod or part pod.

Form ribs to support loadbearing walls using Firth 300mm spacers. Place the spacers at a minimum of one spacer along the edge of each pod or part pod.

3.14 PLACE REINFORCING STEEL: RIB STEEL

Place rib reinforcing steel in the bottom of the internal ribs and supported in the correct position by the Firth spacers. Lap all steel 720mm minimum and hook all plain bars. At the junction with the edge beam, each rib steel bar shall sit on top of the edge beam bars and extend to the outermost bar. Allow for 75mm cover to the edge of the beam. Place 1 x HD12 bar in each 100mm wide rib and 2 x HD12 bars in each 300mm wide rib.

3.15 PLACE REINFORCING STEEL: EDGE BEAM STEEL

Place the two edge beam reinforcing bars in the bottom of the edge beam and supported in the correct position by the Firth spacers. Tie one edge beam bar below the mesh at the perimeter of the area covered by the polystyrene pods. Lap all steel 720mm minimum and hook all plain bars. At corners, the inner bottom bars and the top bars cross each other and extend to 75mm from the outside face of the edge beam. Tie these bars together where they cross. Tying of edge beam steel is only required at corners.

3.16 PLACE REINFORCING STEEL: RE-ENTRANT CORNER STEEL

Place two HD12 bars, 1200mm in length across the corner. Tie to the top of the mesh at re-entrant corners at 200mm centers with 50mm side cover from the internal corner.

Install specified steel to Firth RibRaft® Floor System Manual Section 2 - Installation Information, 3.9 Reinforcing Steel. Ensure specified minimum cover requirements are maintained.

KDC - Approved Building Consent Document - BC210441 - Pg 208 of 336 - 30/08/2021 - ComplyNZ

KDC - Approved Building Consent Document - BC210441 - Pg 209 of 336 - 30/08/2021 - ComplyNZ

3.17 PLACE REINFORCING MESH AND CHAIRS

Place reinforcing mesh over the pods and support on the mesh chairs spaced at 1200mm centerss minimum, with two mesh chairs minimum placed per pod and with one mesh chair minimum per part pod.

3.18 MESH LAPS

For slabs on ground the welded reinforcing mesh to be lapped and tied, such that the outermost wires overlap by the greater of:

- the spacing of the cross wires plus 50mm
- 225mm or
- manufacturer's requirements

Do not count bar extensions beyond the outermost cross wire.

Application - General

3.19 FORM SLAB AND OPENING REBATES

Form rebates, as detailed on drawings.

Form a minimum 50mm rebate in slab for masonry veneer construction with a width dependent on the veneer width, cavity width and overhang. Waterproof the rebate with a bituminous sealer on both the vertical and horizontal faces.

3.20 TOPPING SLAB DEPTH

Refer to SELECTIONS for required topping slab depth.

3.21 PRE-PLACEMENT INSPECTION

Arrange for excavations, formwork and reinforcement to be inspected and passed by the Building Consent Authority.

3.22 CONCRETE PLACEMENT AND COMPACTION

Ensure the rib and edge beam canals are clean, free of debris. Pour the floor in a single pour using only Firth Raftmix™, Firth X-Pod® Raftmix™, Firth Raftmix™ Pump or Firth X-Pod® Raftmix Pump concrete and ensuring that the pods remain in position during placing. Pour concrete onto the top of each pod prior to filling the ribs around the pod to help prevent them from floating and lifting.

Use Firth Raftmix™ or Firth X-Pod® Raftmix™ for placement in the floor directly from the concrete truck chute or Firth Raftmix™ Pump or Firth X-Pod® Raftmix™ Pump concrete for placement in the floor by concrete pump.

Compact concrete using a suitable poker vibrator for the ribs and ground beams and into all corners of the formwork. Screed as required. Confirm levels with a laser level.

3.23 CONCRETE FINISHING

Float and trowel to provide a U3 finish to NZS 3114: table 2, Classes of floor, exterior pavement and invert finishes.

3.24 CONCRETE CURING

Curing of the concrete slab must take place immediately after finishing the concrete to NZS 3109 by one of the following curing methods:

- ponding or continuous sprinkling of water
- placing a wet covering or plastic membrane over the slab
- the use of liquid membrane curing compounds

3.25 SHRINKAGE CONTROL JOINTS

Cut shrinkage control joints as shown on the plans after hardening to a depth of 25mm within 24 hours in summer or 48 hours in winter.

Where shrinkage control joints have not been shown on the plans, position the shrinkage control joints to coincide with major changes in the floor plan. Agree position of shrinkage control joints with the designer.

Bay dimensions formed by the shrinkage control joints to be limited to a maximum ratio of length to width of 2 to 1 with a maximum dimension of 6 meters. Place the shrinkage control joints over the 100mm wide internal ribs wherever possible. Where a shrinkage control joint runs along the line of a 300mm wide loadbearing rib, locate the cut directly above one edge of the 300mm rib.

3.26 CLEAN OUT SHRINKAGE CONTROL JOINTS

Clean out control joints. If required fill with suitable flexible sealant.

Finishing

3.27 STRIKE FORMWORK

Strike formwork after at least 12 hours after the slab has been finished without damaging or overloading structure.

3.28 SURFACE DEFECTS

Make good surface defects immediately after forms are stripped. Make good hollows or bony areas with suitable patching mortar, finished to the same tolerances as the parent concrete. Fill any tie rod holes with 1:2 mortar.

Completion

3.29 COMPLETION MATTERS

Refer to 1270 CONSTRUCTION for completion requirements and if required commissioning requirements.

4 SELECTIONS

For further details on selections go to www.firth.co.nz.
Substitutions are not permitted to the following, unless stated otherwise.

Materials - RibRaft® Floor System

4.1 FIRTH RIBRAFT® POD FLOOR SYSTEM

Brand:	Firth Ribraft® Floor System
Size:	1100mm x 1100mm x 220mm
Concrete mix:	Firth Raftmix 25, 25MPa
Topping thickness:	85mm or 95mm where slab is polished - refer to sheet 501.
Mesh:	Class E, Grade 500E, minimum SE62 or equivalent

4.2 FIRTH SPACERS

Brand:	Firth
Size:	100mm and 300mm

KDC - Approved Building Consent Document - BC210441 - Pg 210 of 336 - 30/08/2021 - ComplyNZ

3813F FUTUREBUILD® NZ - LVL STRUCTURAL FRAMING

1 GENERAL

This section relates to the supply and installation of Futurebuild LVL engineered wood products including:

- hyONE®
- hySPAN®
- hyCHORD®
- hy90®
- hyJOIST®

1.1 RELATED WORK

Refer to 3811 PREFABRICATED STRUCTURAL TIMBER FRAMING for supply of trusses and frames.

Documents

1.2 DOCUMENTS

Refer to the general section 1233 REFERENCED DOCUMENTS. The following documents are specifically referred to in this section:

NZBC B1	Structure
AS/NZS 2269.0	Plywood - Structural - Specifications
NZS 3604	Timber-framed buildings
AS/NZS 4357.0	Structural laminated veneer lumber - Specifications

Documents listed above and cited in the clauses that follow are part of this specification. However, this specification takes precedence in the event of it being at variance with the cited document.

1.3 MANUFACTURER'S DOCUMENTS

Futurebuild LVL documents relating to work in this section are:

- Futurebuild LVL Residential Design Guide
- Futurebuild LVL Specific Engineering Design Guide
- hyJOIST Design and Installation Guide:2.1
- hyJOIST HJ240 45 and HJ300 45 Brochure
- Product Technical Statement - Futurebuild LVL Products specified for Residential Applications through software and literature
- Product Technical Statement - Futurebuild LVL Products: General/Specific Design
- Product Technical Statement - Futurebuild LVL Products: Specified through designIT for commercial floors
- Product Technical Statement - Futurebuild® LVL Products: Specified through computeIT® Software Solutions
- designIT Software which includes installation details, Design Certificate and Producer Statement

Copies of the above literature and software are available from Futurebuild LVL.

Web:	www.futurebuild.co.nz
Email:	info@futurebuild.co.nz
Telephone:	0800 808 131 (Customer Services), 0800 585 244 (Technical)

Requirements

1.4 NO SUBSTITUTIONS

Substitutions are not permitted to any specified Futurebuild LVL engineered wood products or associated components or accessories. The structural properties of other manufactures LVL products may not be comparable.

1.5 QUALIFICATIONS GENERALLY

Refer to 1270 CONSTRUCTION for requirements relating to qualifications.

1.6 CO-ORDINATION

Refer to all drawings to ensure details and fixings required are provided for in the structural LVL work.

KDC - Approved Building Consent Document - BC210441 - Pg 211 of 336 - 30/08/2021 - ComplyNZ

2 PRODUCTS

Materials - Laminated Veneer Lumber (LVL)

2.1 HYSPAN

Structural radiata pine LVL bearers, lintels, rafters, floor joists, floor and roof beams, to AS/NZS 4357.0.

Components

2.2 JOIST HANGERS

Top mount hangers, full depth face mount hangers and partial depth face mount hangers with nails and/or screws to Futurebuild LVL technical literature requirements.

2.3 STEEL STRAPS

Mild steel galvanized straps, to suit tie down applications for rafters, 27mm x 0.6mm, 25mm x 0.8mm and 25mm x 1.0mm.

3 EXECUTION

Conditions

3.1 DELIVERY, STORAGE & HANDLING OF PRODUCTS

Refer to 1270 CONSTRUCTION for requirements relating to delivery, storage and handling of products.

3.2 ERECTION GENERALLY

Carry out the erection of LVL and associated support framing for houses and similar structures to the requirements of NZS 3604 and/or Futurebuild LVL literature and software as detailed. Comply with NZBC B1/VM1, 6.0 Timber. Refer to Futurebuild LVL guidelines for the installation of LVL structural framing. Prop long length beams and lintels at the mid span until the moisture content has reached a suitable level for the application of internal linings.

APPLICATION - HYSPAN

3.3 ERECTION

Lift, place and fix hySPAN without overstressing or deformation. Use temporary supports as needed without causing damage. Fix hySPAN to NZS 3604 and to Futurebuild requirements. Ensure all hySPAN is correctly located, plumb and true to line and face.

Completion & Commissioning

3.4 COMPLETION MATTERS

Refer to 1270 CONSTRUCTION for completion requirements and if required commissioning requirements.

4 SELECTIONS

Substitutions are not permitted to the following, unless stated otherwise.

4.1 HYSPAN® RAFTERS

Location:	As per sheet 504
Type/size:	300x45 hySPAN
Treatment	H1.2

KDC - Approved Building Consent Document - BC210441 - Pg 212 of 336 - 30/08/2021 - ComplyNZ

3820 CARPENTRY

1 GENERAL

This section relates to the supply and erection of timber framing, as a framed structure, or as partitioning. It includes prefabricated timber and engineered wood.

KDC - Approved Building Consent Document - BC210441 - Pg 213 of 336 - 30/08/2021 - ComplyNZ

1.1 RELATED WORK

Refer to 4161P PAUL INDUSTRIES UNDERLAYS, FOIL AND DPC
Refer to 4161T THERMAKRAFT UNDERLAYS, FOILS & DPC

1.2 DOCUMENTS

Refer to the general section 1233 REFERENCED DOCUMENTS. The following documents are specifically referred to in this section:

NZBC B2/AS1	Durability
AS/NZS 1328.1	Glued laminated structural timber - Performance requirements and minimum production requirements
AS/NZS 1604.4	Specification for preservative treatment - Laminated veneer lumber (LVL)
AS/NZS 1604.5	Specification for preservative treatment - Glue laminated timber products
NZS 3602	Timber and wood-based products for use in building
NZS 3603	Timber structures standard
NZS 3604	Timber-framed buildings
NZS 3622	Verification of timber properties
NZS 3640	Chemical preservation of round and sawn timber
AS/NZS 4357.0	Structural laminated veneer lumber - Specification
FTMA CoP	Frame and Truss Manufacturers Association Code of Practice

***A copy of NZS 3604 Timber-framed buildings, must be held on site.**

1.3 QUALIFICATIONS

Workers to be experienced, competent trades people familiar with the materials and techniques specified.

1.4 DIMENSIONS

All timber sizes except for battens are actual minimum dried sizes.

2 PRODUCTS

2.1 TIMBER FRAMING, TREATED

Species, grade and in service moisture content to NZS 3602, NZBC B2/AS1 and treatment to NZS 3640, NZBC B2/AS1. Structural grade (SG) to NZS 3604, NZS 3622 with properties to NZS 3603.

2.2 LAMINATED TIMBER

Radiata pine laminations to AS/NZS 1328.1; treated as required by NZS 3602, NZBC B2/AS1, to the requirements of NZBC B2/AS1, AS/NZS 1604.5, NZS 3640, with special attention to Appendix B "Specification advisory notes". Supply weather resistant sealed.

2.3 TIMBER TRUSSES

To FTMA CoP. Moisture content 16% at supply.

2.4 WALL DWANGS, NOGS AND BLOCKING

If dwangs, nogs or blocking is required for exterior insulated walls, ensure they are not full depth of framing. Install flush with face of wall required, leaving a minimum 20mm or 45mm preferable gap to the other face to NZS 3604, 8.8. Dwangs and nogs if required to be at 1350mm centres maximum to NZS 3604, 8.8.

2.5 EXTERIOR CAVITY WALL BATTENS - TIMBER - NON-STRUCTURAL

H3.1 or H3.2 Radiata pine battens, minimum 20mm thickness, width and height to match timber framing studs. Temporary fix battens before being fixed into the framing with the cladding fixings. To NZS 3602, table 1, reference 1D.10, Requirements for wood-based building components to achieve a 50-year durability performance.

2.6 EXTERIOR CAVITY WALL BATTENS - PROPRIETARY - NON-STRUCTURAL

Extruded polypropylene battens, size approximately 45mm wide x 18mm thickness. Temporary fix battens before being fixed into the framing with the cladding fixings. To the scope limitations of NZBC E2/AS1, and NZS 3604 Building Wind Zones up to, and including "Extra High".

Components

2.7 NAILS

Type to NZS 3604, section 4, **Durability**, and of the size and number for each particular types of joint as laid down in the nailing schedules of NZS 3604, sections 6-10.

2.8 BOLTS AND COACH SCREWS

Bolts and coach screws complete with washers, to the requirements of NZS 3604, clause 2.4.5 Bolts and Coach Screws, and section 4, **Durability**, and of the type, number and form required for each particular junction to NZS 3604, sections 6 - 10.

2.9 NAIL PLATES

Comply with the requirements of NZS 3604, section 4, **Durability**, and of the number and form required for each particular junction to NZS 3604, sections 6 - 10. Plates to the plate manufacturer's design for the particular locations as shown on the drawings.

2.10 CONNECTORS

Comply with the requirements of NZS 3604, section 4, **Durability**, and of the number and form required for each particular junction to NZS 3604, sections 6-10. Connectors and structural brackets to the connector manufacturer's design for particular locations shown on drawings.

2.11 CORROSION RISKS

For interior timber, treated with copper-based timber preservatives (H3.2 or higher), use a minimum of hot-dipped galvanized steel fixings and fasteners.

For exterior timber, timber in damp areas and timber subject to occasional wetting, use only stainless steel (or equivalent) fixings and connectors, when the timber is treated with; Copper Azole (CuAz, Preservative code 58), Alkaline Copper Quaternary (ACQ, Preservative code 90), Micronise Copper Azole (code 88) or Micronised Copper Quaternary (code 89).

2.12 DPC

Refer to 4161T THERMAKRAFT UNDERLAYS, FOILS & DPC

3 EXECUTION

3.1 EXECUTION GENERALLY

To NZS 3604 except as varied in this specification. Execution to include those methods, practices and processes contained in the unit standards for the National Certificate in Carpentry and the National Certificate in Joinery (cabinetry, exterior joinery, stairs).

3.2 SEPARATION

Separate all timber framing timbers from concrete, masonry and brick by: -

- a full length bituminous damp-proof membrane overlapping timber by at least 6mm; or
- a 12mm minimum free draining air space

3.3 ATTENDANCE

Provide and fix blocks, nogs, openings and other items as required by other trades.

3.4 MOISTURE CONTENT

Maximum allowable equilibrium moisture content (EMC) for non air-conditioned or centrally heated buildings for framing to which linings are attached.

Framing at erection:	24% maximum
Framing at enclosure:	20% maximum
Framing at lining:	16% maximum

3.5 SET-OUT

Set out framing in accordance with the requirements of NZS 3604 and as required to support sheet linings and claddings. When necessary provide framing to suit any required cladding/lining control joints and sheet joints.

KDC - Approved Building Consent Document - BC210441 - Pg 214 of 336 - 30/08/2021 - ComplyNZ

3.6 FRAMING FLOORS

Framed and fastened to NZS 3604, section 7, **Floors**.

3.7 FRAMING WALLS

Frame to required loading and bracing complete with lintels, sills and nogs, all fabricated and fastened to NZS 3604, section 8, **Walls**.

3.8 FRAMING ROOFS

Frame to required loading and bracing complete with valley boards, ridge boards and purlins. Design and fit roof trusses complete with anchorage. All fabricated and fastened to NZS 3604, section 9, **Posts** and 10, **Roof framing**.

3.9 FRAMING CEILINGS

Frame to required loading and bracing complete with runners and battens set out to support ceiling lining. All fabricated and fastened to NZS 3604, section 13, **Ceilings**. Trim for openings in ceilings and hatches to NZS 3604 section 13.3, **Openings in ceilings**. Provide blocking for water tanks located in the ceiling space to NZS 3604, section 13.4, **Water tanks in roof space**.

3.10 INSTALLING WALL UNDERLAYS

Refer to 4161P PAUL INDUSTRIES UNDERLAYS, FOIL AND DPC

3.11 FIT CAVITY BATTENS

Fit and fix 20mm cavity battens over wall underlay or rigid air barrier, fully nail to timber studs to the requirements of the manufacturer or to NZS 3604. Fit and fix related flashings. Make allowance for cladding control joints where required. Fit and fix cavity closers to base of walls, open horizontal (or raking) junctions and over openings (windows, meters etc.).

3.12 DPC TO LOSP TREATED TIMBER

Refer to 4161T THERMAKRAFT UNDERLAYS, FOILS & DPC

3.13 DPC TO TIMBER

Refer to 4161T THERMAKRAFT UNDERLAYS, FOILS & DPC

4 SELECTIONS

4.1 EXTERIOR WALL FRAMING - RADIATA PINE

Member	Species	Grade	Treatment
Exterior walls:	Radiata pine	SG8	H1.2
Nogs	Radiata pine	SG8	H1.2
Wall battens (not cavity):	Radiata pine	Merch	H1.2
Jamb battens:	Radiata Pine	Merch	H3.1

4.2 CAVITY BATTENS

Cavity battens	Species	Grade	Treatment
Timber - Non Structural:	Radiata pine	Merchantable	H3.1

4.3 ROOF FRAMING - RADIATA PINE

Member	Species	Grade	Treatment
Rafters:	Radiata pine	SG8	H1.2
Trusses:	Radiata pine	SG8	H1.2
Purlins:	Radiata pine	SG8	H1.2
Ceiling battens:	Radiata pine	SG8	H1.2

4.4 INTERIOR FRAMING - RADIATA PINE

Member	Species	Grade	Treatment
Non structural walls:	Radiata pine	SG8	H1.2
Structural and braced walls:	Radiata pine	SG8	H1.2

4.5 NAILS

Refer to NZ3604:2011 Section 4 - Durability

KDC - Approved Building Consent Document - BC210441 - Pg 215 of 336 - 30/08/2021 - ComplyNZ

4.6 SCREWS

Refer to NZ3604:2011 Section 4 - Durability

4.7 BOLTS AND SCREWS

Refer to NZ3604:2011 Section 4 - Durability

4.8 NAIL PLATES

Refer to NZ3604:2011 Section 4 - Durability

4.9 CONNECTORS

Refer to NZ3604:2011 Section 4 - Durability

KDC - Approved Building Consent Document - BC210441 - Pg 216 of 336 - 30/08/2021 - ComplyNZ

4161P PAUL INDUSTRIES UNDERLAYS, FOIL AND DPC

1 GENERAL

This section relates to the application of **Paul Industries** products:
It includes;

- DPC
- wall wraps/wall underlay
- roofing underlays
- accessories

KDC - Approved Building Consent Document - BC210441 - Pg 217 of 336 - 30/08/2021 - ComplyNZ

1.1 ABBREVIATIONS AND DEFINITIONS

Refer to the general section 1232 INTERPRETATION & DEFINITIONS for abbreviations and definitions used throughout the specification.

The following definitions apply specifically to this section:

Wall underlay	the same meaning as defined in NZBC E2/AS1, covering kraft based and synthetic wall underlays, sometimes called, wall wraps, building wraps or building papers.

Documents

1.2 DOCUMENTS

Refer to the general section 1233 REFERENCED DOCUMENTS. The following documents are specifically referred to in this section:

NZBC E2/AS1	External moisture
NZS 2295	Pliable, permeable building underlays
AS/NZS 2904	Damp-proof courses and flashings
NZS 3604	Timber-framed buildings
AS/NZS 4200.1	Pliable building membranes and underlays - Materials
AS/NZS 4347.0	Damp-proof courses and flashings - Methods of test - General introduction, list of methods and test specimen requirements
AS/NZS 4389	Roof safety mesh
AS/NZS 4534	Zinc and zinc/aluminium-alloy coatings on steel wire
NZMRM CoP	NZ Metal Roof and Wall Cladding Code of Practice

1.3 MANUFACTURER/SUPPLIER DOCUMENTS

Manufacturer's and supplier's documents relating to this part of the work:
Paul Industries Spec Sheets
BRANZ Appraisal 615 - Fast Wrap Building Wrap
BRANZ Appraisal 714 - Fast Wrap FlameSpec HW Roof Underlay
BRANZ Appraisal 715 - Fast Wrap FlameSpec SS Roof Underlay
BRANZ Appraisal 853 - Fast Wrap ULTRA-BOND Sill Tape
BRANZ Appraisal 984 - Pauloid Synthetic Roofing Underlay

Manufacturer/supplier contact details

Company:	**Paul Industries**
Web:	www.paulindustries.co.nz
Email:	info@paulindustries.co.nz
Telephone:	0800 330 320 / 07 578 8209
Facsimile:	07 928 5244

Requirements

1.4 QUALIFICATIONS

Installers to be experienced, competent trades people familiar with the manufacturer's materials and techniques specified and the NZMRM CoP NZ Metal Roof and Wall Cladding Code of Practice.

1.5 NO SUBSTITUTIONS

Substitutions are not permitted to any of the **Paul Industries** specified systems, components and associated products listed in this section.

2 PRODUCTS

Materials

DPM

2.1 DPM TO CONCRETE FLOOR

Refer to referenced concrete section.

Roofing Underlay

2.2 POLYOLEFIN ROOF UNDERLAY

Fast Wrap FlameSpec Roof Underlay, a synthetic fire retardant roof underlay made from a micro-porous water resistant film laminated to two layers of non woven spun bonded polyolefin. Refer to SELECTIONS for options.

Accessories

2.3 WINDOW SILLTAPE

Fast Wrap ULTRA-BOND Sill Tape, a flexible flashing tape system, comprised of white spun bonded polyethylene film faced, butyl rubber self-adhesive tape with a release backing paper. To NZBC E2/AS1, paragraph 4.3.11, **Flexible flashing tape**, paragraph 9.1.5, **Wall underlay to wall openings**.

2.4 FIXINGS

Staples, clouts, screws or propriety wrap/underlay fixings, or other temporary fixings to attach the wall wrap/underlay to the framing.

2.5 ADHESIVE TAPE

Polythene tape to compliment underlay.

3 EXECUTION

Conditions

3.1 GENERAL REQUIREMENTS

To NZBC E2/AS1 Table 23 Properties of Roof Underlays and Wall Underlays; and to Paul Industries technical literature.
NOTE: Care should be taken not to expose the underlay to continuous wet and windy conditions.

3.2 STORAGE

Store building underlays and accessory materials, under conditions that ensure no deterioration or damage. Store rolls in an upright position on a smooth floor and protected from sunlight, UV radiation and moisture.

3.3 INSPECTION

Before starting work, check that the framing will allow work of the required standard. Carry out remedial work identified before laying underlay.

Application - Roofing Underlay

3.4 ROOF/WALL UNDERLAY

Lay vertically over purlins on wire netting with a 150mm side lap. Fix securely to purlins with galvanized fixing clips. Lay underlay to avoid excessive dishing between purlins. When used vertically limit individual runs to 10 metres for bituminous based underlays, 7 metres for fire retardant underlays and 20 metres for synthetic roofing underlays. Do not lay vertically on roof pitches under 10°.

Lay horizontally across the rafter/trusses starting at the gutter line with succeeding sheets in true alignment and lapping 150mm. Scribe around and fit neatly to all penetrations. Avoid prolong exposure by installing the roof immediately.

Application - window sill tape

KDC - Approved Building Consent Document - BC210441 - Pg 218 of 336 - 30/08/2021 - ComplyNZ

3.5 WINDOW SILL TAPE

Install **Fast Wrap ULTRA-BOND Sill Tape** in accordance with Paul Industries technical installation instructions.
Install flexible flashing tape system into and around the framed joinery opening over the wall underlay and exposed frame to cover both the face and edge of the opening. Use also at joinery heads to seal flashing upstands to the wall underlay.

Completion

3.6 CLEAN UP

Clean up as the work proceeds.

3.7 LEAVE

Leave work to the standard required by following procedures.

3.8 REMOVE

Remove debris, unused materials and elements from the site.

4 SELECTIONS

For further details on selections go to www.paulindustries.co.nz.
Substitutions are not permitted to the following, unless stated otherwise.

Wall Wrap/wall underlay

Roofing Underlay

4.1 FAST WRAP FLAMESPEC - FIRE RETARDANT SYNTHETIC ROOF UNDERLAY

Type:: Fast Wrap FlameSpec SS Roof Underlay, self supporting

Accessories - window sill tape

4.2 FAST WRAP ULTRA-BOND SILL TAPE

Brand/type: **Fast Wrap ULTRA-BOND Sill Tape**

KDC - Approved Building Consent Document - BC210441 - Pg 219 of 336 - 30/08/2021 - ComplyNZ

4161T THERMAKRAFT UNDERLAYS, FOILS, DPC, DPM, & TAPES

1 GENERAL

This section relates to the application of **Thermakraft Ltd**, DPC, DPM, Wall & Roof Underlays, Foils, Flashing Tapes, and accessories.

KDC - Approved Building Consent Document - BC210441 - Pg 220 of 336 - 30/08/2021 - ComplyNZ

1.1 RELATED WORK

Refer to 3820 Carpentry

1.2 ABBREVIATIONS AND DEFINITIONS

Refer to the general section 1232 INTERPRETATION & DEFINITIONS for abbreviations and definitions used throughout the specification.

The following abbreviations apply specifically to this section:

NZMRM	New Zealand Metal Roofing Manufacturers Inc.

The following definitions apply specifically to this section:

Wall underlay	the same meaning as defined in NZBC E2/AS1, covering kraft based and synthetic wall underlays, sometimes called wall wraps, building wraps or building papers.

Documents

1.3 DOCUMENTS

Refer to the general section 1233 REFERENCED DOCUMENTS. The following documents are specifically referred to in this section:

NZBC C/AS2	Protection from fire
NZBC E2/AS1	External moisture
AS 1530.2	Methods for fire tests on building materials, components and structures - Test for flammability of materials
NZS 2295	Pliable, permeable building underlays
AS/NZS 2904	Damp-proof courses and flashings
NZS 3604	Timber-framed buildings
NZS 4214	Methods of determining the total thermal resistance of parts of buildings
AS/NZS 4389	Roof safety mesh
AS/NZS 4534	Zinc and zinc/aluminium-alloy coatings on steel wire
NZMRM CoP	NZ Metal Roof and Wall Cladding Code of Practice

1.4 MANUFACTURER/SUPPLIER DOCUMENTS

Thermakraft documents relating to work in this section are:
Thermakraft product manual and technical data sheets.
BRANZ Appraisal 329 - Supercourse 500™ Damp-Proof Course and Concealed Flashing
BRANZ Appraisal 611 - James Hardie Rigid Air Barriers
BRANZ Appraisal 651 - Thermakraft Covertek™ 407 Roof and Wall Underlay
BRANZ Appraisal 695 - Watergate Plus™ Wall Underlay
BRANZ Appraisal 743 - Thermakraft Covertek 405™ Roof and Wall Underlay
BRANZ Appraisal 878 - Thermakraft Aluband™ Window Flashing Tape
BRANZ Appraisal 912 - Thermakraft 220™ Synthetic Wall Underlay
BRANZ Appraisal 917 - Thermakraft Covertek 403™ Roof and Wall Underlay
BRANZ Appraisal 942 - OneSeal™ Multi-Fit Pipe and Cable Penetration Seals
BRANZ Appraisal 943 - Thermakraft Covertek 401™ Roof Underlay
BRANZ Appraisal 962 - The Thermakraft One Wrap System™
BRANZ Appraisal 1000 - Thermakraft Thermabar 397™ Light Diffusing Reflective Underlay
BRANZ Appraisal 1029 - Thermakraft Ausnet™ Hexagonal Wire Mesh
BRANZ Appraisal 1104 – Thermathene Orange™ Concrete Underlay
BRANZ Appraisal 1122 – Thermaflash™ Flashing Tape

Code Mark Certificate 30069 - Thermakraft Covertek 403™ Absorbent Breathable Roof Underlay
Code Mark Certificate 30030 - Thermakraft Covertek 405™ Absorbent Breathable Roof Underlay
Code Mark Certificate 30028 - Thermakraft Covertek 407™ Absorbent Breathable Roof Underlay
Code Mark Certificate 1002 - Thermakraft Watergate Plus™ Wall Underlay

Manufacturer/supplier contact details

Company:	Thermakraft Ltd
Web:	www.thermakraft.co.nz
Email:	info@thermakraft.co.nz
Telephone:	0800 806 595

Warranties

1.5 WARRANTY - MANUFACTURER/SUPPLIER

Warrant this work under normal environmental and use conditions against failure of materials and execution. Thermakraft Ltd warrant performance of products if design and installation comply with relevant technical literature, NZBC, and recognised industry Codes of Practice. Copy of Thermakraft ™ Product Warranty available on request.

Requirements

1.6 NO SUBSTITUTIONS

Substitutions are not permitted to any specified materials, or associated products, components or accessories.

1.7 INSTALLATION SKILL LEVELS

Installers to be experienced in the installation of Thermakraft ™ products and familiar with Thermakraft ™ technical literature and the related documents listed in this design i.e. NZMRM CoP NZ Metal Roof and Wall Cladding Code of Practice.

2 PRODUCTS

Materials

Damp Proof Course

2.1 SUPERCOURSE 500™ DPC

Supercourse 500™, high-impact polyethylene film to AS/NZS 2904 and embossed on both sides. Thickness 500 microns minimum, manufactured for use as a damp-proof course and concealed flashings around doors and windows and to BRANZ Appraisal 329. Refer to SELECTIONS for type of joining tape.

Accessories

KDC - Approved Building Consent Document - BC210441 - Pg 221 of 336 - 30/08/2021 - ComplyNZ

2.2 ALUBAND™ BITUMINOUS FLASHING TAPE

Thermakraft Aluband™ window flashing tape consists of synthetic faced reinforced bituminous window sealing tape, in widths of 75mm, 150mm and 200mm. Used to repair damaged bituminous underlays. Bitumen may react to sealants, always check compatibility. Thermakraft Corner Moulds must be used. Exposure 42 days. Install from 5°C. BRANZ Appraisal 878, and is included in the Thermakraft One Wrap System™BRANZ Appraisal 962.

2.3 THERMAFLASH™ WINDOW FLASHING TAPE

Thermaflash™ is a self-adhesive synthetic flexible window flashing tape, with superior adhesion. can be used with rigid air barrier or rigid wall underlay products. Suitable for use as a flexible flashing around window and door joinery openings. On windows, the use of a Thermakraft Corner Mould™, is optional however butterfly strips must be applied. Available in widths of 75mm, 150mm and 200mm. Use in conjunction with air seals and joinery flashing systems around window and door joinery on timber, steel framed and medium rise buildings.
Compatible with a wide range of sealants but check compatibility. Exposure 180 days. NOT to be used as a flashing tape. BRANZ Appraisal 1122, and is included in the Thermakraft One Wrap System™BRANZ Appraisal 962. Approved for use with the James Hardie™ RAB™ Board system refer BRANZ Appraisal 611.

2.4 ONESEAL™ MULTI-FIT SEALS FOR CABLE AND PIPE PENETRATIONS

Thermakraft OneSeal™, multi-fit pipe seals comprise a UV resistant EPDM material which forms a weathertight air seal for pipes and penetrations with a high strength acrylic adhesive suitable for use on all underlay systems. Available for use with pipes 15-110mm and cables 7-22mm both are pre-punched ensuring a tight accurate fit. No special tools required for installation. Approved for use with the James Hardie™ RAB™ Board system, refeBRANZ Appraisal 611. Included in the Thermakraft One Wrap System™BRANZ Appraisal 962

2.5 PREMIUM JOINING TAPE™

Thermakraft Premium Joining Tape™, an acrylic, reinforced tape with superior adhesion and tear resistance used to join laps of wall and roof underlays, plywood rigid underlay, OSB board, fibre cement and insulation panels, DPM and vapour control products such as foil underlays. Exposure 180 days, install from -10oC. Compatibility of the substrate with Premium Joining Tape must be checked by the designer or the installer prior to use. BRANZ Appraised and approved for use with the James Hardie™ RAB™ Board system, refeBRANZ Appraisal 611. NOT to be used as a flashing tape.

3 EXECUTION

Conditions

3.1 GENERAL REQUIREMENTS

Design application and installation of Thermakraft Building products to NZBC E2/AS1, BRANZ Appraisals, Thermakraft Technical Literature and Industry Codes of Practice.

Application DPC

3.2 DPC TO LOSP/CCA TREATED TIMBER

Lay Supercourse 500™ DPC under LOSP or CCA treated bottom plate of all timber framed walls on concrete, in a single layer with 50mm overlaps at joints to provide a waterproof barrier.

3.3 DPC TO TIMBER / STEEL

Lay Supercourse 500™ under the bottom plate of all timber / steel framed walls on concrete, in a single layer with 50mm overlaps at joints to provide a waterproof barrier.
Refer to SELECTIONS for type.

3.4 DPC TO MASONRY AND BRICK VENEER

Lay Supercourse 500™ along based of cavity and fix top edge to studs with galvanized clouts. Turn DPC out over concrete rebate under bottom course of veneer.

Completion

3.5 COMPLETION MATTERS

Refer to 1270 CONSTRUCTION for completion requirements and if required commissioning requirements.

KDC - Approved Building Consent Document - BC210441 - Pg 222 of 336 - 30/08/2021 - ComplyNZ

4 SELECTIONS

For further details on selections go to www.thermakraft.co.nz.
Substitutions are not permitted to the following, unless stated otherwise.

Damp Proof Course

4.1 THERMAKRAFT - SUPERCOURSE 500™ DPC

Location:	Between all timber and concrete junctions
Type:	Supercourse 500™ DPC
Jointing tape:	Thermakraft™ window sill tape 75mm Aluband™

KDC - Approved Building Consent Document - BC210441 - Pg 223 of 336 - 30/08/2021 - ComplyNZ

4171E ECOPLY® BARRIER RIGID AIR BARRIER SYSTEM

1 GENERAL

This section relates to the use of Carter Holt Harvey Plywood Ltd (CHH PLY) **Ecoply® Barrier** as a rigid wall underlay and air barrier in residential and commercial buildings.

1.1 ABBREVIATIONS AND DEFINITIONS

Refer to the general section 1232 INTERPRETATION & DEFINITIONS for abbreviations and definitions used throughout the specification.

The following abbreviations apply specifically to this section:

FSC®	Forest Stewardship Council®
COC	Chain of Custody

Documents

1.2 DOCUMENTS

Refer to the general section 1233 REFERENCED DOCUMENTS. The following documents are specifically referred to in this section:

NZBC B1/AS1	Structure
NZBC B2/AS1	Durability
NZBC E2/AS1	External moisture
AS/NZS 4680	Hot-dip galvanized (zinc) coatings on fabricated ferrous articles
AS/NZS 1604.3	Specification for preservative treatment - Plywood
AS/NZS 2269.0	Plywood - structural - specifications
NZS 3602	Timber and wood-based products for use in building
NZS 3603	Timber Structures Standard
NZS 3604	Timber-framed buildings
BRANZ Technical Paper P21	BRANZ Technical Paper P21 (2010): A wall bracing test and evaluation procedure

Documents listed above and cited in the clauses that follow are part of this specification. However, this specification takes precedence in the event of it being at variance with the cited document.

1.3 MANUFACTURER'S DOCUMENTS

Carter Holt Harvey Plywood Limited documents relating to work in this section are:
Ecoply® Structural Rigid Air Barrier - Barrier Specification & Installation Guide
CHHPly Product Technical Statement – Ecoply® Barrier: Rigid Air Barrier
Ecoply® Barrier data sheets
CHHPly Safety Data Sheet - Ecoply® Barrier
Ecoply® Barrier CAD drawings
BRANZ Appraisal 827 - Ecoply® Barrier Rigid Air Barrier
Carter Holt Harvey Plywood - Tokoroa Certificate Code: SCS-COC-001316 Trademark License Code: FSC-C012019, Controlled Wood SCS-CW-001316, expires 5 June 2023.

Copies of the current product literature are available from Carter Holt Harvey Plywood Ltd.

Web:	www.ecoplybarrier.co.nz
Telephone:	0800 326 759

1.4 NO SUBSTITUTIONS

Substitutions are not permitted to any of the specified systems, components and associated products listed in this section.

Performance

KDC - Approved Building Consent Document - BC210441 - Pg 224 of 336 - 30/08/2021 - ComplyNZ

1.5 BRACING SYSTEM

The Ecoply® Barrier bracing system provides bracing resistance for walls of light timber framed buildings under wind and earthquake loading to NZBC B1 and NZS 3603. Bracing units are derived from BRANZ P21 test method.

- Refer to drawings for brace location, length and type.
- Refer to Ecoply® Structural Rigid Air Barrier - Barrier Specification & Installation Guide for bracing details.
- Refer to table for summary of P21 Ratings for 2.4m high Ecoply® Barrier wall bracing elements:

Brace type	Min. wall length	Lining Requirements	Gib HandiBrac® Hold-Downs	Bus/m Wind	Bus/m EQ
EPB1	0.4m	Ecoply® Barrier one side	Required	80	95
EPB1	0.6m	Ecoply® Barrier one side	Required	95	105
EPB1	1.2m	Ecoply® Barrier one side	Required	120	135
EP2	0.6m	Ecoply® Barrier each side	Required	105	115
EPBS	0.4m	Ecoply® Barrier one side	Not required	60	60
EPBS	0.6m	Ecoply® Barrier one side	Not required	60	65
EPBS	1.2m	Ecoply® Barrier one side	Not required	65	70
EPBS	2.4m	Ecoply® Barrier one side	Not required	80	90
EPBG	0.4m	Ecoply® Barrier one side & 10mm Gib® Standard plasterboard other side	Required	100	115
EPBG	1.2m	Ecoply® Barrier one side & 10mm Gib® Standard plasterboard other side	Required	150*	150*

Note* - Maximum 120 Bus/m for any bracing element on timber framed floor (NZS 3604)

2 PRODUCTS

Materials

2.1 ECOPLY® BARRIER PLYWOOD

Ecoply® Barrier sheet, 7mm thick, 1197mm wide and 2440 and 2745mm long structural plywood. Manufactured from radiata pine to AS/NZS 2269. H3.2 CCA treated to E2/AS1 and AS/NZS 1604.3 requirements. Beige polyester powder coated on front face and four edges. Sheets marked Ecoply® Barrier.

Components

2.2 NAILS

Nails to minimum durability requirements of the NZBC. Refer to NZS 3604, section 4, **Durability**, for requirements for fixing's material to be used in relation to the exposure conditions.

Fixing method:	Nail type:	Zone:
Hand driven	50 x 2.8mm (flat head or round head) hot-dip galvanized to AS/NZS 4680	B & C zones
Power driven Paslode Pneumatic Cladding Coil Nailer	Paslode Impulse 50 x 2.8mm hot-dip galvanized ring round head drive B20557	B & C zones
Hand driven	50 x 2.8mm (flat head or round head) annular grooved stainless steel (grade 304 or 316)	D Zone

3 EXECUTION

Conditions

KDC - Approved Building Consent Document - BC210441 - Pg 225 of 336 - 30/08/2021 - ComplyNZ

KDC - Approved Building Consent Document - BC210441 - Pg 226 of 336 - 30/08/2021 - ComplyNZ

3.1 DELIVERY, STORAGE & HANDLING OF PRODUCTS

Refer to 1270 CONSTRUCTION for requirements relating to delivery, storage and handling of products.

3.2 ROUTINE MATTERS

Refer to 1250 TEMPORARY WORKS & SERVICES for protection requirements.
Refer to 1270 CONSTRUCTION for requirements relating to defective or damaged work, removal of protection and cleaning.

3.3 WALL FRAMING

Kiln dried verified structural grade timber, minimum SG8. Framing sizes and set outs to NZS 3604 with studs at 600mm maximum centres, nogs at 1350mm maximum centres and 45mm minimum framing width at sheet joints. Treatment to NZBC B2/AS1 and NZS 3602.

Application

3.4 SUPPORT EDGES AND JOINTS

Fully support edges and joints with a minimum framing width of 45mm at each Ecoply® Barrier sheet joint.

3.5 FIXING ECOPLY® BARRIER SHEETS

Position Ecoply® Barrier sheets with the water-resistant powder coat film facing outwards with the long side of the sheet orientated vertically to framing members. Allow 2-3mm expansion gap between vertical sheet edges. Place any cut sheet ends at the top with the sealed sheet end at the bottom. Cover all other cuts and penetrations with Ecoply® Barrier Sealing tape. Sheets to overhang the bottom plate, joist or bearer by a minimum of 25mm.

3.6 FASTENERS - STANDARD NAILING PATTERN

Nail 7mm minimum from sheet edges at 150mm centres around perimeter of each sheet or part sheet, and 300mm centres within sheet body up to and including Very High wind zone, or 150mm centres within sheet body in Extra High wind zone. Finish fastener heads flush with the panel surface.

3.7 FIXING TO RESIST UPLIFT

For 4.7kN fixing of top plate to studs modify standard nailing pattern, nail sheet edge to top plate at 75mm centres, 20mm from the sheet edge.

Completion & Commissioning

3.8 COMPLETION MATTERS

Refer to 1270 CONSTRUCTION for completion requirements and if required commissioning requirements.

3.9 COMPLETION - TESTS & CERTIFICATION

Refer to 1270 CONSTRUCTION for general test and certification requirements at completion.

4 SELECTIONS

For further details on selections go to www.ecoplybarrier.co.nz
Substitutions are not permitted to the following, unless stated otherwise.

4.1 ECOPLY® BARRIER PLYWOOD

Location:	All exterior walls as shown on the drawings
Manufacturer:	CHH Woodproducts
Brand/grade:	Ecoply® Barrier DD A BOND
Stress grade:	F8
Thickness:	7mm
Treatment:	H3.2 CCA

4.2 ECOPLY® BARRIER BRACING

Refer to Ecoply® Structural Rigid Air Barrier - Barrier Specification & Installation Guide for specific bracing details. For bracing element location refer to drawn documentation.

4239JH JAMES HARDIE® SOFFITS

1 GENERAL

This section relates to the supply and fixing of **James Hardie®** products to the underside of exterior soffits, verges and eaves. It includes:

- James Hardie® Eclipsa™ Eaves Lining
- James Hardie® HardieFlex™ Eaves Lining
- James Hardie® HardieGroove™ Soffit Lining
- James Hardie® HardieSoffit™ Lining
- James Hardie® Villaboard™ Soffit Lining

1.1 RELATED WORK

Refer to 3820 Carpentry
Refer to 7411 Rainwater Spouting Systems
Refer to painting section/s for the protective coating required to meet the NZBC durability requirements.

Documents

1.2 DOCUMENTS

Refer to the general section 1233 REFERENCED DOCUMENTS. The following documents are specifically referred to in this section:

NZBC E2/AS1	External moisture
AS/NZS 1170.2	Structural design actions - Wind actions
AS/NZS 2908.2	Cellulose-cement products - Flat sheet
NZS 3602	Timber and wood-based products for use in building
NZS 3604	Timber-framed buildings
NASH Standard Part 2	May 2019 Light Steel Framed Buildings

1.3 MANUFACTURER/SUPPLIER DOCUMENTS

James Hardie® documents relating to this part of the work:
James Hardie® Eaves and Soffits Installation Manual
James Hardie® Fire and Acoustic Design Manual.

Manufacturer/supplier contact details

Company:	James Hardie New Zealand Limited
Web:	www.jameshardie.co.nz
Email:	info@jameshardie.co.nz
Telephone:	0800 808 868

Warranties

1.4 WARRANTY - MANUFACTURER/SUPPLIER

Provide a material manufacturer/supplier warranty:

15 years:	For James Hardie® HardieFlex™ Eaves Lining

(refer to James Hardie® product warranty)

15 year:	For accessories supplied by James Hardie® (refer to James Hardie® product warranty)
From:	Date of purchase

- Provide this warranty on the manufacturer's standard form.

Refer to the general section 1237 WARRANTIES for additional requirements.

Requirements

1.5 QUALIFICATIONS

Workers / Installers / applicators to be experienced, competent trades people familiar with the materials and techniques specified.

KDC - Approved Building Consent Document - BC210441 - Pg 227 of 336 - 30/08/2021 - ComplyNZ

1.6 NO SUBSTITUTIONS

Substitutions are not permitted to any of the specified systems, components and associated products listed in this section.

1.7 SAFE WORKING

To James Hardie® requirements for safe working practices with James Hardie® products, particularly with regards to cutting and drilling.

1.8 INFORMATION FOR OPERATION AND MAINTENANCE

Provide relevant James Hardie maintenance requirements at completion of the work.

Performance

1.9 PERFORMANCE - UP TO AND INCLUDING VERY HIGH WIND ZONE

The design wind speeds/zones are to NZS 3604, up to and including Very High Wind Zone. James Hardie® Eaves and Soffits Installation Manual requirements are suitable for these conditions.

2 PRODUCTS

Materials

2.1 HARDIEFLEX™ EAVES LINING

James Hardie® HardieFlex™ Eaves Lining 4.5mm and 6mm thick cellulose fibre reinforced cement sheet. Manufactured to AS/NZS 2908.2 from Portland cement, ground sand, cellulose fibre and water.

Components

2.2 FASTENER TYPE

Fasteners to minimum durability requirements of the NZBC. Refer to NZBC E2/AS1, Table 20, Material selection for fixing material, and NZBC E2/AS1, Table 21, Compatibility of materials in contact, for selection of suitable fixing materials and their compatibility with other materials.

Exposure	Fixing	Fixing Material	Zone
Sheltered	Nail	Hot-dip galvanized steel	B
Sheltered	Nail	Stainless steel	B, C, D, E
Sheltered	Screw	Stainless steel	B, C, D, E

Check against SED (specific engineering design) requirements for microclimate conditions. Refer to SELECTIONS for fastener type.

Components - HardieFlex™ Eaves Lining

2.3 SOFFIT JOINTERS AND MOULDS

Extruded uPVC jointer, capping and scotia mould.

2.4 HARDIEFLEX™ NAILS

HardieFlex Nail, 40 x 2.8mm stainless steel or galvanized nail, Refer to SELECTIONS.

2.5 INSEAL TAPE

Inseal® 3259, 1.5mm thick x 50mm wide black compressible medium density closed cell foam tape.

2.6 POLYPROPYLENE TAPE

Polypropylene tape, 30mm minimum width.

Components - General

2.7 FLEXIBLE JOINT SEALANT

Refer to SELECTIONS.

3 EXECUTION

Conditions

KDC - Approved Building Consent Document - BC210441 - Pg 228 of 336 - 30/08/2021 - ComplyNZ

3.1 STORAGE

Take delivery of products dry and undamaged. Store on site, lay flat on a smooth level surface clear of the ground. Protect materials, finished surfaces, edges and corners from damage, water and moisture.

3.2 HANDLING

Move/handle goods in accordance with James Hardie® requirements. Avoid distortion and contact with potentially damaging surfaces. Do not drag sheets across each other, or across other materials. Protect edges, corner and surface finish from damage. Reject and replace goods that are damaged or will not provide the required finish. Install materials in a dry state.

3.3 SUBSTRATE - TIMBER FRAMING

Do not commence work until the substrate is of the standard required for the specified finish; plumb, level and in true alignment. Moisture content of timber framing must not exceed the requirements specified by NZS 3602 to minimise shrinkage and movement after sheets are fixed.

3.4 COMMENCE WORK

Do not commence work until the roof has been installed.

Application - general

3.5 SHEET LAYOUT

All sheet edges must be fully supported by framing or rebates in fascia and barge boards.

3.6 CUTTING SOFFIT CLADDING

Cut sheets dry using score and snap method, hand guillotine method or fibreshear heavy duty method. If these methods are not feasible, use an alternative manufacturer approved method.

3.7 CIRCULAR HOLE FORMING

Mark the centre of the hole on the sheet, pre-drill a pilot hole. Use the pilot hole as a guide for a hole saw fitted to a heavy duty electric drill.

3.8 IRREGULAR HOLE FORMING

Drill a series of small holes around the perimeter of the proposed hole, tap out the waste piece from the sheet face.

3.9 INSTALL HARDIEFLEX™ EAVES LINING

Install in accordance with James Hardie® installation manual requirements. Refer to SELECTIONS for fixing and jointing methods.

3.10 BUTT JOINT

Paint sheet edges prior to installation.

3.11 CONTROL JOINT

Install control joint to James Hardie® installation manual requirements.

3.12 FASTENER - SIZE AND LAYOUT

Fix sheets to framing using fasteners as nominated in SELECTIONS. Fix to James Hardie® installation manual requirements.

3.13 SEALANTS

Application and use of sealants to manufacturer's instructions. Check with sealant manufacturer prior to coating over sealants.

3.14 PAINTING

Refer to painting section/s for protective coating system.

Completion

3.15 COMPLETE

Ensure the work is complete with all components, accessories, trim, sealant and finishing properly installed so the soffit cladding system is completely weathertight.

KDC - Approved Building Consent Document - BC210441 - Pg 229 of 336 - 30/08/2021 - ComplyNZ

3.16 REPLACE

Replace all damaged or marked elements.

3.17 CLEAN

Clean surfaces.

3.18 LEAVE

Leave work to the standard required for following procedures.

3.19 REMOVE

Remove debris, unused materials and elements from the site.

4 SELECTIONS

For further details on selections go to www.jameshardie.co.nz
Substitutions are not permitted to the following, unless stated otherwise.

Materials

4.1 HARDIEFLEX™ EAVES LINING

Location:	All Soffits
Brand/type:	James Hardie® HardieFlex™ Eaves Lining
Thickness:	4.5mm
Width:	Typically 450mm unless noted other wise on sheet 504
Fixing Method:	HardieFlex™ nails
Fixing type:	Stainless steel HardieFlex™ Nail, 40 x 2.8mm
Joint detail:	Hardiejointer™ 5mm

Painting

4.2 PAINTING

Refer to painting section/s for details.

KDC - Approved Building Consent Document - BC210441 - Pg 230 of 336 - 30/08/2021 - ComplyNZ

4282C SPECIALIZED EZPANEL AAC PANEL CLADDING SYSTEM

1 GENERAL

This section relates to SPECIALIZED CONSTRUCTION PRODUCTS (**SCP**) EZpanel Aerated Concrete wall cladding system with a plaster finish based on 50mm aerated concrete panels fixed to timber/metal framing on a drained / ventilated cavity.

KDC - Approved Building Consent Document - BC210441 - Pg 231 of 336 - 30/08/2021 - ComplyNZ

1.1 ABBREVIATIONS AND DEFINITIONS

Refer to the general section 1232 INTERPRETATION & DEFINITIONS for abbreviations and definitions used throughout the specification.
The following abbreviations apply specifically to this section:

SCP	Specialized Construction Products
MPNZA	Master Painters New Zealand Association
AAC	Autoclaved Aerated Concrete
LRV	Light reflectance value

Documents

1.2 DOCUMENTS

Refer to the general section 1233 REFERENCED DOCUMENTS. The following documents are specifically referred to in this section:

NZBC E2/AS1	External moisture
AS/NZS 1170.2	Structural design actions - Wind actions
AS/NZS 2311	Guide to the painting of buildings
AS 3566	Self-drilling screws for the building and construction industries
NZS 3602	Timber and wood-based products for use in building
NZS 3604	Timber-framed buildings
WorkSafe:	Guidelines for the provision of facilities and general safety in the construction industry
MPNZA	Health and Safety Programme

Health and Safety at Work Act 2015

1.3 MANUFACTURER/SUPPLIER DOCUMENTS

Manufacturer and supplier documents related to this section are:
EZpanel Exterior Plasterwork Specifications and Design Solutions.
Specialized Construction Products Technical Data Sheets.
BRANZ Appraisal 649 - EZpanel Cavity System

Materials and execution to Specialized Construction Products specification except where varied by this specification and supported by architectural detailing.

Copies of the above literature are available from:

Company:	Specialized Construction Products
Web:	www.specialized.co.nz
Email:	info@specialized.co.nz
Telephone:	09 414 4499

Warranties

1.4 WARRANTY

SCP warrant this system under normal environmental and use conditions against failure of materials and execution. The plaster system is warranted as follows:

Materials:	15 years from date of practical completion issued by the manufacturer.
Execution:	5 years from the date of practical completion issued by the Certified EZpanel contractor upon completion.

A warranty pack including a producer statement from the Certified EZpanel contractor and a guarantee plaque to be adhered to the inside of the meter box for the project, must be made available by the Certified contractor at the date of practical completion.

Requirements

1.5 NO SUBSTITUTIONS

Substitutions are not permitted to any specified **SCP** plaster system.

1.6 QUALIFICATIONS

Use only applicators Certified by Specialized Construction Products to apply the exterior wall cladding system.

KDC - Approved Building Consent Document - BC210441 - Pg 232 of 336 - 30/08/2021 - ComplyNZ

Documentation

1.7 INFORMATION FOR OPERATION AND MAINTENANCE

Provide **SCP** maintenance instructions before practical completion of the contract for issuing to the building owner.

1.8 HEALTH AND SAFETY

Refer to the requirements of the Health and Safety at Work Act 2015 and WorkSafe: Guidelines for the provision of facilities and general safety in the construction industry.
If the elimination or isolation of potential hazards and risks is not possible then minimise hazards and risks in this work on site by using the proper equipment and techniques as required in the MPNZA Health and Safety Programme. Supply protective clothing and equipment. Inform employees and others on site of the hazards and risks, and put into place procedures for dealing with emergencies. Obtain from **SCP** the material safety data sheets for each product. Keep sheets on site and comply with the required safety procedures.

Performance

1.9 PERFORMANCE

The Certified EZpanel contractor must accept responsibility for the structural and weather-tight performance of the exterior render application.

1.10 PROTECTION OF NEW PLASTER

Confirmation of the protection systems to be applied to fresh plaster coats to be agreed between the main contractor and the Certified applicator before plastering begins.

1.11 INSPECTIONS

Allow to inspect the whole of the work at each stage. Determine a programme for inspections including notification when each part and stage of the work is ready for inspection prior to the work commencing. Permit representatives from **SCP** to inspect the work in progress and to take samples of their products from site.

1.12 PRODUCER STATEMENT

Provide a producer statement compiled by the Certified EZpanel contractor in the form as required by the Building Consent Authority.

1.13 FIXINGS, WIND

Design and use the fixings appropriate for the wind zone (R) and topographical classification (T) of this site and building height; as required by NZS 3604 and the wind loads on various wall areas as given by AS/NZS 1170.2.

2 PRODUCTS

Materials

2.1 EZPANEL AAC PANELS

50mm thick Autoclaved Aerated Concrete Panels measuring 600 mm x 2200 mm.

Cement Plaster

2.2 CEMENT PLASTER - FINE MESH COAT

A factory mixed cementitious polymer modified plaster used as a bedding compound for detailed reinforcing work around penetrations and areas where the reinforcing mesh must be bent.

2.3 CEMENT PLASTER - EZPANEL BASE COAT

Factory-mixed polymer modified plaster coating containing Portland cement, sand, lime and other admixtures. Used as a bedding compound for the fibreglass mesh used to reinforce the surface of the AAC panels.

2.4 CEMENT PLASTER - STUCCO TEXTURE FINISH

Factory-mixed polymer modified cement based plaster sprayed through a hopper gun to achieve a heavy stucco plaster finish.

2.5 CEMENT PLASTER - FLOAT FINISH

Factory-mixed polymer modified cement based plaster polished flat to achieve a fine granular finish.

2.6 CEMENT PLASTER - SPANISH FINISH

Factory-mixed polymer modified cement based plaster to achieve an undulating adobe style finish.

2.7 CEMENT PLASTER - FINE SPRAY TEXTURE FINISH

Factory mixed polymer modified cement based plaster sprayed through a sagola gun to achieve a sharp stipple texture.

2.8 CEMENT PLASTER - GRANOPOR TOP 1.5MM ACRYLIC TEXTURE FINISH

A ready to use, synthetic resin-base render which is polished flat to achieve a fine granular finish.

2.9 CEMENT PLASTER - GRANOPOR FINE 1.0MM ACRYLIC TEXTURE

A ready to use, synthetic resin-based render which is polished flat to achieve a fine granular finish or sprayed through a hopper gun or a sagola gun to achieve a fine stippled appearance.

Acrylic Plaster

2.10 ACRYLIC PLASTER - POWAFLEX BASE COAT

Powaflex Acrylic plaster is a ready to use, organically bound base coat. Used as a bedding compound for the fibreglass mesh used to reinforce around penetrations and the surface of the AAC panels.

2.11 ACRYLIC PLASTER - GRANOPOR TOP 1.5MM ACRYLIC TEXTURE

A ready to use, synthetic resin-base render which is polished flat to achieve a fine granular finish.

2.12 ACRYLIC PLASTER - GRANOPOR FINE 1.0MM ACRYLIC TEXTURE

A ready to use, synthetic resin-based render which is polished flat to achieve a fine granular finish or sprayed through a hopper gun or a sagola gun to achieve a fine stippled appearance.

Paint Finish

2.13 PRIMER - LIMESTOP

Limestop water based primer applied over cement based finishing plaster before the paint coating. Refer to SELECTIONS.

2.14 PAINT SYSTEM - PLASTERSHIELD

Plastershield 100% acrylic latex compatible with cement based or acrylic based plaster and suitable for textured surfaces and tinted to the selected colour. Refer to SELECTIONS.

Components

2.15 EZPANEL FIXINGS, TIMBER FRAME 20mm CAVITY

To AS 3566. 100mm long Corrosion Class 4 wood screws with a head diameter of 14mm and a shank diameter of 5.1mm. To NZS 3604 defined Corrosion Zones B and C and Grade 304 stainless steel 6-gauge in Zone D and Zone E (NZBC E2/AS1).

2.16 EZPANEL ADHESIVE

Sabre Fix PU adhesive for temporarily bonding EZpanel joints during construction prior to plastering.

KDC - Approved Building Consent Document - BC210441 - Pg 233 of 336 - 30/08/2021 - ComplyNZ

2.17 EXTERIOR CAVITY BATTENS

For 20mm Cavity - 50mm x 21mm Ultra high density (Class UHD) expanded polystyrene battens with an approximate density of 28kg/m³, and are fixed with glue.

For 40mm Cavity - EZpanel battens for a 40mm cavity installation are manufactured from either;

- 41mm x 50mm Ultra High Density (Class UHD) expanded polystyrene battens with an approximate density of 28kg/m³ and are fixed with glue or 50mm galvanised flathead nails.
- 40mm x 40mm x 200mm H3.2 CCA timber batten ties with a minimum slope of 15 degrees on the top edge, fixed with two 75mm galvanised ringshank nails.

40mm polystyrene battens must only be used in situations where the bottom edge of the sheet is fully supported by a rebate in the slab or an appropriate weight bearing lintel.
Polystyrene battens fixed to studs at maximum 600mm horizontal centres (stud centres), and at maximum 600mm vertical centres (at all horizontal joints between the EZpanels). Additional battens may be required at corners and around openings

2.18 REINFORCING MESH

Alkali-resistant fibreglass woven reinforcing mesh with a nominal size of 4mm x 4mm square and a weight of 160 g/m².

Accessories

2.19 FLASHINGS AND ACCESSORIES

Proprietary profiles made from rigid uPVC for head, sill, and jamb flashings, lipped L-bead, 50mm U-channel, 70mm U-channel, 20mm x 20mm corner bead, 50mm x 20mm L-bead, flat U-channel and 50mm high back U-channels.

2.20 EXTERIOR CAVITY BASE BEAD

Proprietary cavity base bead made from rigid uPVC. Base bead to have 3mm x 10mm slots to provide 1000mm² ventilation per linear metre.

2.21 SEALANTS

Paintable MS sealant in accordance with **SCP**'s guide and set against backer rods where necessary.

2.22 WATERPROOF MEMBRANE TAPES

Tapes covered by a valid BRANZ appraisal for use as waterproof membranes over the tops of plastered parapets, balustrades, fixing blocks etc.

2.23 ADHESIVE

AAC compatible construction adhesive for adhering uPVC components to the EZpanel as and where required.

3 EXECUTION

Conditions

3.1 DELIVERY, STORAGE & HANDLING OF PRODUCTS

Refer to 1270 CONSTRUCTION for requirements relating to delivery, storage and handling of products.

Additional special requirements:

- Deliver all materials in original unopened packaging with labels intact.
- Provide dry storage on site, stack carefully, protect from mechanical damage.
- Keep bagged render off concrete surfaces on a timber pallet or timber dunnage.
- Plaster stock older than six months must be discarded.
- Battens, uPVC flashings and profiles must be protected from direct sunlight and

3.2 ROUTINE MATTERS

Refer to 1250 TEMPORARY WORKS & SERVICES for protection requirements.
Refer to 1270 CONSTRUCTION for requirements relating to defective or damaged work, removal of protection and cleaning.

3.3 PLASTERING CONDITIONS

Carry out plastering to **SCP**'s specifications under conditions which will not adversely affect the finished work.

KDC - Approved Building Consent Document - BC210441 - Pg 234 of 336 - 30/08/2021 - ComplyNZ

3.4 PROTECT

Before application of plaster, apply masking film and tape to all joinery, pipes, roofs and all areas likely to be marked by the plaster. Use drop cloths and ground covers to keep the working areas clean. Clean droppings off finished work immediately.

3.5 SUBSTRATE - TIMBER FRAME

Do not commence work until the framing is of the standard required for the specified finish; plumb, level and in true alignment. Moisture content of timber framing must not exceed the requirements specified by NZS 3602 to minimise shrinkage and movement after the panels are fixed. Studs are not to exceed 600mm centres and nogs fitted flush at a maximum of 800mm centres. Wall underlay to comply with NZBC E2/AS1 Table 23.

3.6 EZPANEL SUBSTRATE

Do not commence work until openings and apertures have been cut, pipes, fixtures, fixing pads and plugs have been fixed and flashings and other preparations are complete. All defects in substrate must be rectified prior to application of plaster coatings. Ensure that backgrounds and adjoining surfaces are, after the preparation called for in this section, of **SCP's** required standard.

3.7 FLASHING AND DETAILING

Comply with NZBC E2/AS1, 4.0 **Flashings** and **SCP**'s penetration flashing guidelines. Carry out to the required standard of execution to ensure water does not penetrate.

3.8 CONFIRM LAYOUT

Before commencing work confirm the layout of expansion joints and other visual detailing of the finished work.

Application

3.9 PENETRATIONS

Confirm that exterior wall openings have been prepared ready for the installation of all window and door frames and other penetrations through the cladding. Required preparatory work includes the following:

- wall underlay to openings finished and dressed off with flexible flashing tape ready for the installation of window and door frames and other penetrations.
- installation of window and door joinery.
- installation of flashings (those required to be installed prior to installation of penetrating elements).
- where electrical cables pass through cladding, put into conduit to ensure that there is no direct contact with the polystyrene battens.
- windows must be installed so a gap of 23mm to 24mm is provided from the back of the joinery to the front of the timber framing.
- all penetrations such as water pipes, ducting, light fittings, must be installed with a minimum of 5° outward slope and be sealed to the wall underlay by the contractor who installed them.

3.10 FLASHING AND ACCESSORIES

Fit flashings to jambs, sills and heads on recessed joinery using the manufacturer proprietary flashings. Reinforce external corners and bottom edges of EZpanel with uPVC angles and channel extrusions glued to the EZpanel with Sika Nailbond PB adhesive.

3.11 CAVITY BASE BEAD

Where the EZpanel system is applied in a 'free-hanging' state the bottom edge of the EZpanels can be additionally supported by fixing a 50mm high backed uPVC base bead to the bottom wall plate.

3.12 POLYSTYRENE CAVITY BATTENS

Fix polystyrene battens full length to studs to achieve either a 20mm or a 40mm minimum thickness drained cavity to NZBC E2/AS1, 9.0 **Wall claddings**. The battens are fixed by the cladding fixings which will penetrate the wall framing studs over the wall underlay. Seal the top of the cavity. Install cavity closer/vermin proofing at base of wall, open horizontal (or raking) junctions, over openings (windows, meters etc). Horizontal cavity battens must be no longer than 100mm and fixed at a 5° slope. Fix additional battens to internal and external corners and around openings to **SCP**'s standard details.

KDC - Approved Building Consent Document - BC210441 - Pg 235 of 336 - 30/08/2021 - ComplyNZ

3.13 FIXING EZPANELS OVER CAVITY BATTENS

Screw fix through the cavity battens into the wall framing to **SCP**'s details. EZpanels may be joined off stud but all sheet edges must be glued with Sabre Fix PU as the sheets are being installed prior to mesh coat being applied. All corners must be castellated and vertical sheet joins to be offset by a minimum of 150mm. Horizontal panel edges do not require edge fixing, except at soffits and at window and door openings where additional framing will be required. Anti-corrosionpaint must be applied to all exposed reinforcing in the panels.

3.14 SEALING SUBSTRATE

Seal the surface of the EZpanels properly prior to the application of any plaster. To seal the EZpanels, apply one good coat of undiluted Specialized EZpanel Resin over the entire surface of the dwelling and allow it to completely dry before plastering commences. Apply EZpanel resin with a pump up sprayer, long nap roller or wide paint brush at a spread rate of 10-12m² per litre. Failing to correctly prepare and seal the surface of the aerated concrete panels may cause delamination, chalking or failure in the base coat.

3.15 SILLS BALUSTRADES AND PARAPET TOPS

A minimum slope of 10° to all horizontal surfaces.

3.16 MOVEMENT CONTROL JOINTS

Incorporate in accordance with the design information supplied by **SCP**. Control joints to be constructed in the Ezpanel in accordance with the Technical Literature and must be provided horizontally at 6.4m centres and at inter-storey levels and vertically at 8m centres. Additional control joints will be required where the system abutments different cladding types, where cladding covers structural materials, and over a movement joint in the underlying framing. Confirm locations in writing to the owner before work commences.

Finishing - Cement Plaster

3.17 CEMENT PLASTER - FINE MESH COAT

Applied as a detailing base coat plaster at a minimum thickness of 2mm to 3mm. Embed fibreglass soft mesh into the wet plaster around all penetrations. Overlap each successive layer by 30mm minimum.

3.18 CEMENT PLASTER - EZPANEL BASE COAT

Apply in accordance with SCP requirements. Apply EZPanel Base Coat embedded with hard fibreglass mesh to all flat areas of wall. Drops of hard mesh do not have to overlap but should be tightly butt joined. If the mesh doesn't overlap then any butt join must be offset from vertical EZpanel joints by a minimum of 150mm. Where overlapped, overlap each successive length by 30mm minimum.

3.19 CEMENT PLASTER - STUCCO TEXTURE FINISH

Applied as a fine base coat plaster that can be sprayed through a hopper or sagola gun to achieve a heavy stucco texture finish.

3.20 CEMENT PLASTER - FLOAT FINISH

Trowel applied in two coats 1 - 2mm per layer over the mesh coat and polished flat to achieve a fine granular finish in accordance with **SCP** requirements.

3.21 CEMENT PLASTER - SPANISH FINISH

Trowel applied using SCP's recommended techniques in various thicknesses over the mesh coat to achieve an undulating style finish.

3.22 CEMENT PLASTER - FINE SPRAY TEXTURE FINISH

Applied over the base coat by sagola gun with a 7mm tip and with the compressor set at 60 psi, to achieve a fine stipple finish.

3.23 CEMENT PLASTER - GRANOPOR TOP 1.5MM ACRYLIC TEXTURE

Trowel applied and polished flat to achieve a fine granular finish in accordance with **SCP** requirements.

3.24 CEMENT PLASTER - GRANOPOR FINE 1.0MM ACRYLIC TEXTURE

Trowel applied and polished flat to achieve a fine granular finish or spray applied through a hopper gun or sagola gun to achieve a fine stippled finish in accordance with **SCP** requirements.

KDC - Approved Building Consent Document - BC210441 - Pg 236 of 336 - 30/08/2021 - ComplyNZ

Finishing - Acrylic Plaster

3.25 ACRYLIC PLASTER - POWAFLEX BASE COAT

Apply in accordance with **SCP** requirements. Apply Powaflex embedded with hard fibreglass mesh to all flat areas of wall. Drops of hard mesh do not have to overlap but should be tightly butt joined. If the mesh doesn't overlap then any butt join must be offset from vertical EZpanel joints by a minimum of 150mm. Where overlapped, overlap each successive length by 30mm minimum.

3.26 ACRYLIC PLASTER - GRANOPOR TOP 1.5MM ACRYLIC TEXTURE

Trowel applied and polished flat to achieve a fine granular finish in accordance with **SCP** requirements.

3.27 ACRYLIC PLASTER - GRANOPOR FINE 1.0MM ACRYLIC TEXTURE

Trowel applied and polished flat to achieve a fine granular finish or spray applied through a hopper gun or sagola gun to achieve a fine stippled finish in accordance with **SCP** requirements.

Finishing - Paint

3.28 LIMESTOP PRIMER

As soon as the plaster finish is dry enough to accept the paint system apply one coat of Limestop in accordance with manufacturer requirements to ensure efflorescence does not form on the surface of the finished paint system.

3.29 PAINT FINISH

As soon as the acrylic plaster finish or the limestop primer over cement based plaster finish is dry enough to accept the paint system apply either Plastershield or a 100% latex acrylic based exterior paint system to the paint manufacturer requirements. Apply 2 coats minimum of the selected paint system tinted to the selected colour.

Completion

3.30 COMPLETION MATTERS

Refer to 1270 CONSTRUCTION for completion requirements and if required commissioning requirements.

4 SELECTIONS

Substitutions are not permitted to the following, unless stated otherwise.

4.1 EZPANEL

Size/thickness:	2200mm x 600mm x 50mm

4.2 CAVITY BATTENS

Polystyrene:	50mm x 21mm

4.3 PANEL ADHESIVE

Brand:	Sabre Fix PU adhesive

4.4 uPVC ADHESIVE

Brand:	Sika Nailbond PB adhesive or equivalent

4.5 REINFORCING MESH

Type:	Alkali-resistant fibreglass woven reinforcing mesh
Grade/weight:	160 g/m² with a 4mm x 4mm aperture

4.6 CEMENT PLASTER FINISH

If chosen by Client:

Fine mesh coat:	Specialized Fine Mesh Coat Plaster
Base coat:	Specialized EZPanel Base Coat Plaster
Finish texture coat:	TBC by client

KDC - Approved Building Consent Document - BC210441 - Pg 237 of 336 - 30/08/2021 - ComplyNZ

4.7 ACRYLIC PLASTER FINISH

If chosen by Client:

Base coat:	Powaflex Acrylic plaster
Finish texture coat:	TBC by client

4.8 PAINT SYSTEM

Primer:	TBC
Paint system:	Plastershield
Top Coats:	2 coats
Paint colour:	TBC by client

KDC - Approved Building Consent Document - BC210441 - Pg 238 of 336 - 30/08/2021 - ComplyNZ

4323G GERARD® STEEL TILE ROOFING

1 GENERAL

This section relates to Gerard® interlocking pressed Steel roofing tiles complete with underlay, battens and accessories.
It includes:

- Gerard® Steel roofing tiles
- Associated flashings and accessories

1.1 RELATED WORK

Refer to 4161P PAUL INDUSTRIES UNDERLAYS, FOIL AND DPC for underlays, foils and DPC
Refer to relevant timber framing section for timber battens

1.2 ABBREVIATIONS

Refer to the general section 1232 INTERPRETATION & DEFINITIONS for abbreviations used throughout the specification.

NZMRM	New Zealand Metal Roofing Manufacturers Inc

Documents

1.3 DOCUMENTS

Refer to the general section 1233 REFERENCED DOCUMENTS. The following documents are specifically referred to in this section:

NZBC B1/AS1	Structure
NZBC B2/AS1	Durability
NZBC E2/AS1	External moisture
NZBC G12/AS1	Water Supplies
AS 1397	Continuous hot-dip metallic coated steel sheet and strip – coatings of zinc and zinc alloyed with aluminium and magnesium
AS/NZS 4680	Hot dip galvanised coatings on fabricated ferrous articles – galvanising of nails
AS/NZS ISO9001	Quality management systems - requirements
NZS 2295	Pliable, permeable building underlays
NZS 3602	Timber and wood based products for use in building
NZS 3604	Timber-framed buildings
NZS 4217	Pressed metal tile roofs
NZMRM CoP	NZ Metal Roof and Wall Cladding Code of Practice

1.4 MANUFACTURER'S DOCUMENTS

Manufacturer's and supplier's documents relating to work in this section are:
Gerard – Brochures
Gerard – Specification manual
Gerard – Statement of Building Code Compliance
Gerard – Technical Note : "Aluminium Zinc Substrate performance"
Gerard – Technical Note :"Installation of Gerard Roofs in all wind zones including extra high wind zones"
Gerard – "Builders check-list"
AHI Roofing Ltd ISO 9001 Certificate
AHI Roofing Ltd ISO 14001 Certificate No. 188
NZGBC Certificate of Membership 2020-2021
Declare Certificate AHI 0001 Gerard Satin Tile expires 1st March 2021
Declare Certificate AHI 0002 Gerard Textured Tile expires 1st March 2021

Manufacturer/supplier contact details:

Company:	RoofTG Pacific Limited
Web:	www.gerardroofs.co.nz
Email:	info@gerardroofs.co.nz
Telephone:	0800 100 244

Warranties

KDC - Approved Building Consent Document - BC210441 - Pg 239 of 336 - 30/08/2021 - ComplyNZ

1.5 WARRANTY - MANUFACTURER/SUPPLIER - STANDARD WARRANTY

Provide a material manufacturer/supplier warranty:

Textured Finish Roof

50 years, pro rata	For weatherproofing, with textured finish roof
20 years, pro rata	For surface coating, with textured finish roof

Smooth Finish Roof

50 years, pro rata	For weatherproofing, with Smooth finish roof
15 years, pro rata	For surface coating, with Smooth finish roof

- Provide this warranty on the manufacturer/supplier standard form (if not available then use the standard form in the general section 1237WA WARRANTY AGREEMENT)
- Commence the warranty from the date of practical completion of the contract works.

Refer to the general section 1237 WARRANTIES for additional requirements.

1.6 WARRANTY - INSTALLER /APPLICATOR

Provide an installer/applicator warranty:

5 years	For installation of roof

- Provide this warranty on the installer/applicator standard form (if not available then use the standard form in the general section 1237WA WARRANTY AGREEMENT)
- Commence the warranty from the date of practical completion of the contract works.

Refer to the general section 1237 WARRANTIES for additional requirements.

Requirements

1.7 QUALIFICATIONS

Installers to be experienced in installation of Gerard® roofing tiles and certified by Gerard®. If requested provide evidence of qualification / experience prior to commencing work.

1.8 NO SUBSTITUTIONS

Substitutions are not permitted to any specified Gerard® system, or associated components and products.

Compliance Information

1.9 INFORMATION REQUIRED FOR CODE COMPLIANCE

Provide the following compliance documentation:

- Applicators approval certificate from the manufacturer / importer / distributor
- Manufacturer's / suppliers warranty
- Installer's warranty
- Producer Statement - Construction from the applicator / installer

Performance - Wind

1.10 DESIGN PARAMETERS - NON SPECIFIC DESIGN

Building wind zone: High / 1.20 kPa ULS (refer to NZS 3604, table 5.4)

1.11 FIXINGS, WIND - NON SPECIFIC DESIGN

Design and use the fixings appropriate to Gerard® systems – Specification manual requirements and as appropriate for the project wind design stated above. To NZS 3604, table 10.12 Tile Battens for all Wind Zones. Refer to Gerard® – Specification manual & Technical Note:"Installation of Gerard Roofs in all wind zones including extra high wind zones" for the selected profile, fixing requirements.

Perforance - General

KDC - Approved Building Consent Document - BC210441 - Pg 240 of 336 - 30/08/2021 - ComplyNZ

1.12 CO-ORDINATE

Co-ordinate to ensure substrate and preparatory work is complete and other work programmed in the order required for access and completion of the roof. Complete Gerard® – "Builders check-list."

1.13 PERFORMANCE

Accept responsibility for the weather-tight performance of the completed roofing system, including all penetrations through the roof and junctions with walls and parapets. Comply with NZMRM CoP, for performance, loadings, design, flashings, penetrations and installation recommendations, and section 15.3, **Pressed Steel Tiles**.

1.14 DRINKING WATER

Rainwater collected from correctly installed Gerard® systems will meet the provisions of NZBC G12/AS1.

2 PRODUCTS

Materials

2.1 UNDERLAY

Self supporting, kraft-based roofing underlay or self supporting, synthetic roofing underlay to comply with NZS 2295. Refer to 4161 UNDERLAYS, FOILS AND DPC for details.

2.2 BATTENS

To NZS 3604, 10.2.1.16 **Purlins and tile battens**. Radiata Pine or Douglas Fir, SG6, treated H1.2. Moisture content to NZS 3602, size, spacing and fixing to NZS 3604 table 10.12 **Tile Battens for all wind zones** or to Gerard® requirements for Wind -specific design.

2.3 PRESSED STEEL TILES

To NZS 4217, and NZBC E2/AS1, 8.3 Pressed Steel tiles. Aluminium/Zinc coated steel AZ 150, 0.39mm BMT to AS 1397. Tiles available in a range of profiles & may be finished either in a stone chip texture or Smooth acrylic finish. Refer to SELECTIONS for type.

Components

2.4 TILE FIXINGS

Hot-dipped galvanized steel flat head 50mm x 2.8mm painted tile nails to Gerard® specification.

2.5 BATTEN FIXINGS

90x3.15mm gun nails or self drilling screws in accordance with NZS 3604 table 10.12 Tile Battens for all wind zones and Gerard® - Technical Note:"Installation of Gerard Roofs in all wind zones including extra high wind zones".

2.6 FLASHINGS, CAPPINGS AND COVERS

To NZS E2/AS1, 4.0 **Flashings**. Gerard® proprietary ridge, hip, gable, valley & wall flashings, cappings and trims manufactured from aluminium-zinc coated steel AZ 150, to AS 1397, coated to match adjacent roofing where required, as part of the selected Gerard® profile's roofing system.

Accessories

2.7 SEALANT

Neutral cure silicone or MS sealant in accordance with Gerard® requirements.

2.8 TOUCH-UP KITS

Gerard® touch-up kits of base colour and stone chip texture for application over membrane roofing which overlaps panels.

3 EXECUTION

Conditions

KDC - Approved Building Consent Document - BC210441 - Pg 241 of 336 - 30/08/2021 - ComplyNZ

3.1 STORAGE AND HANDLING

Take delivery of materials and goods and store on-site and protect from damage. Stack tiles on ground no more than two pallets high, on a level, hard base, ventilated and protected from damage and weather.
Protect finished surfaces, edges and corners from damage. Move/handle goods in accordance with manufacturer's requirements without soiling, scratching, crushing or other damage.
Reject and replace goods that are damaged or will not provide the required finish.

3.2 INSPECTION

Inspect the roof framing and supporting structure and do not start work until it is complete and fully braced ready for tiling, all to the requirements of NZS 3604 or specific design where required.
Ensure Gerard® – "Builders check-list" has been completed

3.3 COMPLY

Comply with the preparation, laying and fixing requirements of NZS 4217, NZBC E2/AS1 8.0 **Roof claddings**, and the Gerard® requirements where these are of a higher standard.

3.4 DISSIMILAR METALS / MATERIALS

Isolate dissimilar materials in close proximity as necessary by painting the surfaces or fitting separator strips of compatible or inert materials. Place isolators between metals and treated timber, cement based materials, and mixing aluminium sheet and steel mesh. Do not use unpainted lead sheet, copper or brass in contact with or allow water run-off onto galvanized or aluminium-zinc coated steel.
Ensure all fixings are compatible with the roof tile material.

Application

3.5 SET-OUT

Carefully set out the roof with a measuring rod to position the battens accurately taking account of rafter lengths, overhangs into gutters and spoutings and verge overhangs, all to minimise tile cutting. Batten setout in accordance with requirements for selected Gerard® profile.

3.6 LAY UNDERLAY

Roof underlay to be installed horizontally with a minimum 75mm overlap, all vertical laps to be taken past rafters and lap by a minimum of 150mm to NZBC E2/AS1: 8.1.5 **Underlays,** and Gerard® requirements. Roofing underlay is installed under the roofing battens but over the bottom batten over fascia into gutters, drawn tight over rafters from ridges and hips and into valleys.
If damaged, make good with full lap inserts as the work proceeds.

3.7 FIX BATTENS

To NZS 3604, table 10.12 and/or to Gerard® requirements for specific design wind loads. Fix battens over the underlays in straight courses, spanning at least 3 rafters, between fascia and ridge and elsewhere to Gerard® required details. Nail or screw as required at every crossing. Square cut ends to form butt joint over rafters with joints staggered.

3.8 FIX VALLEY

To NZBC E2/AS1: 8.1.6.2 **Valley Gutters & hidden gutters** and in accordance with Gerard® requirements. Valley overlaps to be at least 150mm, do not fix through valleys, tag top edge of valley join to eliminate valley creep.

3.9 LAYING

Do not take heavy equipment onto the roof. Plan work to minimise foot traffic. Work on the roof only using appropriate footwear. Interlock, lap and lay tiles to NZBC E2/AS1: 8.3 **Pressed Steel tiles**, and Gerard® requirements. Finish ridge, hip, valley, barge and eaves to Gerard® required details if not detailed elsewhere.

3.10 NAILING TILES

Nail tiles to battens generally through the upstand and downturn of the tile lap as well as all elements to Gerard® details and to NZBC E2/AS1.
Bottom course of tiles are fixed driving vertical nails into face of tile, and into eaves batten. Eaves nails to Smooth finish tiles are sealed with a synthetic washer, textured tiles to be sealed with the touch-up kit base coat and stone chip.
Successive rows of tiles are fixed driving 50mm Gerard® approved nails into the face of battens.

KDC - Approved Building Consent Document - BC210441 - Pg 242 of 336 - 30/08/2021 - ComplyNZ

3.11 CUTTING AND BENDING

Cut, bend and straighten tiles neatly to finish true to line and plane when in place, using installation equipment maintained in the proper condition, all to NZS 4217 and to Gerard® details.

3.12 FIT FLASHINGS, COVERS AND CAPPINGS

Cut, fit and fix all elements true to line and plane, to NZBC E2/AS1: 4.0 **Flashings**, NZBC E2/AS1: 5.0 **Roof/wall junctions** in accordance with Gerard® requirements and the NZMRM CoP, section 15.3 **Pressed Steel Tiles**, if not detailed elsewhere.
Tiles must be turned up a minimum of 40mm and covered to prescribed cover by Gerard® factory produced flashings.

3.13 PENETRATIONS AND JUNCTIONS

Form to NZBC E2/AS1: 8.1.7 and 8.3.10 Roof penetrations, in accordance with Gerard® requirements and to the NZMRM CoP.

Check that adjoining walls and parapets are prepared ready for the installation of the roofing. Confirm that openings have been prepared ready for the installation of skylight, chimneys and other penetrations through the roof. Required work includes the following:

- underlay turned up at wall and parapet lines
- underlay finished and dressed off to all openings, ready for the installation of skylights and other penetrations
- roofing installation neatly finished to all sides of openings and to all wall and parapet junctions including proprietary Gerard® PVC stop ends.
- installation of flashings, either custom-made flashings made from Gerard® supplied sheet or a supported membrane flashing.
- install selected sealant between flashing and roofing tile to Gerard® requirements.
- where applicable, touch up membrane flashings where they overlap roofing tiles with Gerard® touch-up kit base coat and/or stone chip.

Completion

3.14 MAKE GOOD

Touch up all damaged coatings with Gerard® touch-up kit base coat and/or stone chip

3.15 LEAVE

Leave this work complete with all necessary flashings, valleys, ridges and hips all properly installed as the work proceeds so the finished roof is completely weathertight.

3.16 REMOVE

Remove trade rubbish and unused materials from the roof and surrounds regularly during the work. Sweep down the completed roof and clean out spoutings, gutters and rainwater pipes. Remove debris, unused materials and elements from the site.

4 SELECTIONS

For further details on selections go to https://designtech.gerardroofs.co.nz/DesignTech/
Substitutions are not permitted to the following, unless stated otherwise.

Materials

4.1 UNDERLAY

Refer to 4161P PAUL INDUSTRIES UNDERLAYS, FOILS AND DPC.

4.2 TIMBER BATTENS

Type:	Refer to relevant timber framing section for timber battens
Fixings:	S - 2/90 X 3.15mm gun nails

Roof tiles

4.3 GERARD® ASPEN ROOF TILE

Type:	Gerard® Aspen
Roof pitch:	25/17.5 degrees
Finish:	TBC by client
Colour:	TBC by client

KDC - Approved Building Consent Document - BC210441 - Pg 243 of 336 - 30/08/2021 - ComplyNZ

Flashings

4.4 GERARD® PROPRIETARY FLASHINGS/CAPPINGS/TRIMS

Type:	Refer to drawings
Finish:	To match adjacent roofing
Colour:	To match adjacent roofing

Accessories

4.5 SEALANT

Type:	MS Sealant

KDC - Approved Building Consent Document - BC210441 - Pg 244 of 336 - 30/08/2021 - ComplyNZ

4521 ALUMINIUM WINDOWS AND DOORS

1 GENERAL

This section relates to the manufacture, supply, and installation of:

- aluminium windows
- aluminium doors and frames
- hardware and furniture
- overhead glazing
- flashings

1.1 RELATED WORK

Refer to glazing sections for glass types

1.2 ABBREVIATIONS AND TERMS

SLS	Serviceability limit state
ULS	Ultimate limit state
WGANZ	Window & Glass Association NZ
PQAS	Powder Coating Quality Assurance System

Documents

KDC - Approved Building Consent Document - BC210441 - Pg 245 of 336 - 30/08/2021 - ComplyNZ

1.3 DOCUMENTS

Refer to the general section 1233 REFERENCED DOCUMENTS. The following documents are specifically referred to in this section:

NZBC E2/AS1	External moisture
NZBC F4/AS1	Safety from falling
NZBC H1/VM1	Energy efficiency
NZBC H1/AS1	Energy efficiency
AS/NZS 1170.2	Structural design actions - Wind loads
NZS 1170.5	Structural design actions - Earthquake actions - New Zealand
AS/NZS 1580.108.1	Methods of test for paints and related materials - Determination of dry film thickness on metallic substrates - Non destructive methods
AS/NZS 1734	Aluminium and aluminium alloys - flat sheets, coiled sheet and plate
AS/NZS 1866	Aluminium and aluminium alloys - Extruded rod, bar, solid and hollow shapes
NZS 3604	Timber-framed buildings
AS 3715	Metal finishing - Thermoset powder coatings for architectural applications
NZS 4211	Specification for performance of windows
NZS 4223.3	Glazing in buildings - Human impact safety requirements
AS/NZS 4680	Hot-dip galvanized (zinc) coatings on fabricated ferrous articles
AAMA 2603	Voluntary specification, performance requirements, and test procedures for pigmented organic coatings on aluminium extrusions and panels (with coil coating appendix)
AAMA 2604	Voluntary specification, performance requirements and test procedures for high performance organic coatings on aluminium extrusions and panels.
AAMA 2605	Voluntary specification, performance requirements and test procedures for superior performing organic coatings on aluminium extrusions and panels.
BS 3900	Methods of tests for paints, Part C5: Determination of film thickness
BRANZ BU 636	Protecting Glass From Damage

Window & Glass Association NZ (WGANZ) documents:

Window Installation Guide	Guide to Window Installation as described in E2/AS1 Amendment 7
PQAS	Powder Coating Quality Assurance System
SFA 3503-03	Anodic Oxide coatings on wrought aluminium for external architectural application (2005)

US Federal Specification:

TT-S-001543A	Sealing compound, silicone rubber base (for caulking, sealing and glazing in buildings and other structures)
TT-S-00230C	Sealing compound, elastomeric type, single component (for caulking, sealing and glazing in buildings and other structures)

Warranties

1.4 WARRANTY - MANUFACTURER / SUPPLIER

Provide a material manufacturer/supplier warranty:
5 years: For fabrication
Refer to the general section for the required form of 1237WA WARRANTY AGREEMENT and details of when completed warranty must be submitted.

1.5 WARRANTY - INSTALLER / APPLICATOR

Provide an installer/applicator warranty:
2 years: For installation

- Provide this warranty in the installer/applicator standard form.

Refer to the general section 1237 WARRANTIES for additional requirements.

KDC - Approved Building Consent Document - BC210441 - Pg 246 of 336 - 30/08/2021 - ComplyNZ

Requirements

1.6 QUALIFICATIONS

Work to be carried out by trades people experienced, competent and familiar with the materials and techniques specified.

1.7 COMPLIANCE

Windows and doors to be manufactured and installed to NZBC E2/AS1.

1.8 CERTIFICATION

Provide evidence of a certificate by a laboratory accredited by International Accreditation of New Zealand that the windows and doors offered comply with the requirements of NZS 4211.

Performance

1.9 PERFORMANCE - WINDOWS AND DOORS

To NZS 4211, including:

- deflection, opening sashes, air infiltration, water penetration, ultimate strength, torsional strength of sashes, marking.

Refer to SELECTIONS.

1.10 PERFORMANCE - STRUCTURAL/WEATHER-TIGHTNESS

The structural and weather-tight performance of the completed joinery, the glazing and infill panels is the responsibility of the window manufacturer.

Performance - Wind (design by contractor)

1.11 WIND - NON SPECIFIC DESIGN

Design the installation to the wind zone parameters of NZS 3604, table 5.4.
Refer to SELECTIONS for wind zone.

Finishes

1.12 CERTIFY COATINGS - POWDER COATING

Certify on request, compliance with this specification and support with control and sampling records. Test for film thickness to BS 3900, part C5, method No. 4, using method (b) or to AS/NZ 1580.108.1 for certifying thickness and method (a) where any dispute arises as to the thickness provided.
The coating should be applied by an applicator who can certify that the coating has been applied in accordance with the specification.

2 PRODUCTS

Materials

2.1 WINDOWS

Refer to SELECTIONS for type and finish.

2.2 DOORS

Refer to SELECTIONS for type and finish.

2.3 ALUMINIUM EXTRUSIONS

Alloy designation to comply with AS/NZS 1866. Branded and extruded for anodising or powder coating.

2.4 ALUMINIUM SHEET AND STRIP

Complying with AS/NZS 1734 of suitable thickness. Rolled for anodising or powder coating.
Alloy designation: 5251 - H16 or 5005 - H16

2.5 STAINLESS STEEL SHEET AND STRIP

Type: 316 austenitic steel
Finish grade: 2B (satin lustre)

KDC - Approved Building Consent Document - BC210441 - Pg 247 of 336 - 30/08/2021 - ComplyNZ

2.6 GLASS

Refer to the glazing section for glass types and installation.

2.7 FLASHINGS GENERALLY

To NZBC E2/AS1, 9.1.10 **Windows and Doors**. Material, grade and colour of head flashings to match the window frames. Ensure that materials used for head, jamb and sill flashings are compatible with the window frame materials and fixings and cladding materials.

KDC - Approved Building Consent Document - BC210441 - Pg 248 of 336 - 30/08/2021 - ComplyNZ

Components - for cavity systems

2.8 STANDARD CAVITY CLOSER

A perforated device constructed from either aluminium or PVC to close the cavity above the window or door unit, between the cladding and head flashing, to provide ventilation in accordance with NZBC E2/AS1 to the spaces above the window or door.

2.9 SUPPORT BAR

WGANZ extruded aluminium support bar with built in drainage and ventilation to NZBC E2/AS1, to provide continuous support to the window unit. Size to suit cladding type.

Components

2.10 GLAZING GASKETS

Thermoplastic rubber. Do not stretch glazing gaskets during installation. Measure and cut gaskets 5-10% over length before installation.

2.11 HARDWARE AND FURNITURE

Hinges, stays, catches, fasteners, latches, locks and furniture as offered by the window and door manufacturer. Refer to SELECTIONS for type and finish. Key alike all lockable window hardware able to be keyed alike.

2.12 SAFETY STAYS

Stainless steel non releasable restrictors to limit window opening to NZBC F4/AS1, Section 2.0, **Opening windows**.

Sealants

2.13 STRUCTURAL SEALANT

Silicone chemically curing sealant specifically formulated and tested or approved equivalent with not less than a ± 40% movement factor complying with US Federal Specification TT S 001543A.

2.14 WEATHERING / INSTALLATION SEALANT

Building sealant used in accordance with manufacturer's instructions for weather sealing aluminium frames to the cladding, complying with US Federal Specification TT S 0011534A, or a one-part polyurethane moisture curing, elastic joint sealant of medium modulus (± 25% movement) to US Federal Specification TT S 00230C.

2.15 FOAM TAPE

Foam tape to NZBC E2/AS1, 9.1.10.7 **Closed cell foam tape**.

Finishes

2.16 POWDER COATED ALUMINIUM - EXTRA-DURABLE POLYESTER

Polyester powder organic coating in accordance with WGANZ PQAS, AS 3715, and AAMA 2603

2.17 POWDER COATED ALUMINIUM - HIGH-DURABILITY POLYESTER

High-performance polyester powder coating in accordance with WGANZ PQAS , and AAMA 2604.

2.18 POWDER COATED ALUMINIUM - HIGH DURABILITY FLUOROPOLYMER

Very high-performance PVF2 fluoropolymer powder coating in accordance with WGANZ PQAS and AAMA 2605.

3 EXECUTION

Conditions - generally

KDC - Approved Building Consent Document - BC210441 - Pg 249 of 336 - 30/08/2021 - ComplyNZ

3.1 DO NOT DELIVER

Do not deliver to site any elements which cannot be unloaded immediately into suitable conditions of storage.

3.2 UNLOAD WINDOW JOINERY

Unload, handle and store elements in accordance with the window manufacturer's requirements.

3.3 AVOID DISTORTION

Avoid distortion of elements during transit, storage and handling.

3.4 PREVENT DAMAGE

Prevent prefinished surfaces rubbing together, and contact with mud, plaster and cement. Keep paper and cardboard wrappings dry.

3.5 PROPRIETARY ELEMENTS

Fix in accordance with the window manufacturer's requirements.

3.6 PROTECTIVE COVERINGS

Retain protective coverings and coatings to BRANZ BU 636 and keep in place during the fixing process. Provide protective coverings and coatings where required to prevent marking of surfaces visible in the completed work and to protect aluminium joinery from following trades. Remove protection on completion.

3.7 ADDITIONAL PROTECTION

Supply and fix additional protection as necessary to prevent marking of surfaces which will be visible on completed work.

Conditions - fixings and fastenings

3.8 SUPPLY OF FIXINGS

Use only fixings and fastenings recommended by the manufacturer of the component being fixed and to comply with the ULS wind pressure stated in SELECTIONS. Ensure fixings and fastenings exposed to the weather are of aluminium, or Type 316 stainless steel or if not exposed to the weather may they be hot-dip galvanized steel with a coating weight of 610 g/m² complying with AS/NZS 4680.

3.9 INSTALLATION FIXING

To NZBC E2/AS1, 9.1.10.8, **Attachments for windows and doors**. Fix windows/doors through reveal to frame with a pair of 75 x 3.15mm minimum galvanised jolt head nails or a pair of 8 gauge x 65mm minimum stainless steel screws. Fix at a maximum of 450 centres along all reveals and a maximum of 150mm from reveal ends. Ensure fixings do not penetrate metal flashings. Install packers between reveals and framing at fixing points, except at the head.

Assembly

3.10 FABRICATION

Fabricate frames as detailed on shop drawings. Install glazing, hinges, stays and running gear as scheduled. Provide temporary bracing and protection. Temporarily secure all opening elements for transportation.

3.11 TIMBER / PVC REVEALS

Before fixing to aluminium frames, ensure that timber reveals which are being painted have been primed on all surfaces.

3.12 HARDWARE GENERALLY

Factory fit all required and scheduled hardware. Account for all keys and deliver separately to the site manager.

3.13 SAFETY STAYS

Factory fit safety stays to all windows scheduled for safety stays and to all windows where safety stays are required to comply with NZBC F4/AS1 4.0, Opening windows.

Installation - windows and doors

3.14 CORROSION PROTECTION

Before fixing, apply suitable barriers of bituminous coatings, stops or underlays between dissimilar metals in contact, or between aluminium in contact with concrete.

3.15 CONFIRM PREPARATION OF EXTERIOR WALL OPENINGS

Confirm that exterior wall openings have been prepared ready for the installation of all window and door frames. Do not proceed with the window and door installation until required preparatory work has been completed.

Required preparatory work includes the following:

- wall underlay/building wrap to openings finished and dressed off ready for the installation of window and door frames to NZBC E2/AS1:9.1.5 **Wall underlays to wall openings**.
- Full height 20mm jamb battens to NZBC E2/AS1 figure 72A (direct fix only)
- claddings neatly finished off to all sides of openings
- installation of flashings (those which are required to be installed prior to frames).

3.16 INSTALLATION

Fix to comply with the reviewed shop drawings and installation details including flashings and bedding compounds, pointing sealants and weathering sealants.

3.17 INSTALLATION CAVITY CONSTRUCTION

Install to WGANZ Window Installation Guide details and drawings including WGANZ sill support bars.
For thresholds with support bars fixed through membranes, pre-fill support bar screw holes with silicone sealant to NZBC E2/AS1, figure 62(d).

3.18 INSTALL FLASHINGS

Install flashings to heads, jambs and sills of frames as supplied and required by the window manufacturer and as detailed on the drawings. Finish head flashings to match window finish.

Place all flashings so that the head flashing weathers the jamb flashings, which in turn weathers over the upstand of the sill flashing. Ensure that sill flashings drain to the outside air.

Except where window/door frames are recessed, ensure that head flashings over-sail unit by 20mm minimum plus any jamb scriber width at each end.

3.19 COMPLETE AIR SEAL

To NZBC E2/AS1:9.1.6 Air seals. Form an air-tight seal by means of a proprietary expanding foam or sealants used with backing rods, applied between the window / door reveal and structural framing to a depth of 10 - 20mm, to provide a continuous air tight seal to the perimeter of the window or door.

3.20 FIX HARDWARE

Fix all sash and door hardware and furniture as scheduled.

Application - jointing and sealing

3.21 SEAL FRAMES ON SITE

Seal frames to each other and to adjoining structure and finishes, all as required by the window manufacturer and to make the installation weathertight. In very high and extra high or greater wind zones, seal between the window head and the head flashing. Do not seal the junction between the sill member and the cladding or sill flashing which must remain open.

3.22 PREPARE JOINTS

Ensure joints are dry. Remove loose material, dust and grease. Prepare joints in accordance with the sealant manufacturer's requirements, using required solvents and primers where necessary. Mask adjoining surfaces which would be difficult to clean if smeared with sealant.

3.23 BACK UP

When using back-up materials do not reduce depth of joint for sealant to less than the minimum required by the manufacturer of the sealant. Insert polyethylene rod or tape back-up behind joints being pointed with sealant.

KDC - Approved Building Consent Document - BC210441 - Pg 250 of 336 - 30/08/2021 - ComplyNZ

3.24 SEALANT FINISH

Tool sealant to form a smooth fillet with a profile and dimensions required by the sealant manufacturer. Remove excess sealant from adjoining surfaces, using the cleaning materials nominated by the sealant manufacturer and leave clean.

Completion - cleaning

3.25 REMOVE TRADE DEBRIS

Remove trade debris by appropriate means on a floor by floor basis as each floor is completed and again before any work is covered up by others. Arrange for general removal.

3.26 TRADE CLEAN

Trade clean window frames, operable windows and doors, glass and other related surfaces inside and out at the time of installation to remove marks, dust and dirt, to enable a visual inspection of all surfaces.

Completion

3.27 PROTECTIVE COVERINGS

Retain protective coverings and coatings and keep in place during the fixing process. Provide protective coverings and coatings where required to prevent marking of surfaces visible in the completed work and to protect aluminium joinery from following trades.

3.28 SAFETY

Indicate the presence of transparent glasses for the remainder of the contract period, with whiting, tape or signs compatible with the glass type. Indicators other than whiting must not be applied to the glass surface. Masking tape must not be used for this purpose.

3.29 IN SITU TOUCH-UP TO POWDER COATED ALUMINIUM

In situ touch-up of polyester or fluoropolymer coated aluminium is only permitted only to minor surface scratching. Otherwise replace all damaged material.

3.30 REMOVE

At the appropriate stage of the project, remove safety indicators and protective coverings and wipe down all joinery thoroughly.

3.31 REPLACE

Replace damaged, cracked or marked elements.

4 SELECTIONS

Performance

4.1 THERMAL PERFORMANCE

R-value:	0.26 (as determined from NZBC H1/VM1 or H1/AS1)

Performance - Wind (design by contractor)

4.2 WIND - NON SPECIFIC DESIGN

Building wind zone	H (refer to NZS 3604, table 5.4)

Window and door system

4.3 ALUMINIUM WINDOWS

Manufacturer:	Refer to Client Specifications
Type/location:	Refer to sheet 801

4.4 ALUMINIUM DOORS

Manufacturer:	Refer to Client Specifications
Type/location:	Refer to sheet 801

Finishes

KDC - Approved Building Consent Document - BC210441 - Pg 251 of 336 - 30/08/2021 - ComplyNZ

4.5 FLASHINGS

Material/type: Aluminium
Pattern: Formed to suit details provided

4.6 HARDWARE

Refer to Client Specifications

KDC - Approved Building Consent Document - BC210441 - Pg 252 of 336 - 30/08/2021 - ComplyNZ

4610 GLAZING RESIDENTIAL

1 GENERAL

This section relates to the supply and fixing of glass products for external and internal joinery in residential type buildings and includes:

- windows and doors
- frameless shower and bath screens
- splashbacks, wall linings
- balustrade systems, pool fences
- mirrors and mirror frames

KDC - Approved Building Consent Document - BC210441 - Pg 253 of 336 - 30/08/2021 - ComplyNZ

1.1 RELATED WORK

Refer to 4521AR APL Residential Aluminium Windows & Doors

1.2 ABBREVIATIONS AND DEFINITIONS

Refer to the general section 1232 INTERPRETATION & DEFINITIONS for abbreviations and definitions used throughout the specification.

The following abbreviations apply specifically to this section:

PVB	Polyvinyl Butyral
CIP	Cast in place

Documents

1.3 DOCUMENTS

Refer to the general section 1233 REFERENCED DOCUMENTS. The following documents are specifically referred to in this section:

NZBC F4/AS1	Safety from falling
NZBC F9/AS1	Means of restricting access to residential pools
NZBC H1/AS1	Energy Efficiency
AS/NZS 1170.2	Structural design actions - Wind loads
NZS 3604	Timber-framed buildings
NZS 4211	Specification for performance of windows
NZS 4218	Thermal insulation - Housing and Small Buildings
NZS 4223.1	Glazing in buildings - Glass selection and glazing
NZS 4223.Supp1	Glazing in buildings - Supplement 1 to NZS 4223.1:2008 and NZS 4223.4:2008
NZS 4223.2	Glazing in buildings - Insulating glass units
NZS 4223.3	Glazing in buildings - Human impact safety requirements
NZS 4223.4	Glazing in buildings - Wind, dead, snow and live action
AS/NZS 2208	Safety glazing materials in buildings
AS/NZS 4666	Insulating glass units
BRANZ BU 636	Protecting Glass From Damage

Warranties

1.4 WARRANTY - MANUFACTURER/SUPPLIER

Warrant glass under normal environmental and use conditions against failure of materials.

10 years:	for insulating glass units
10 years:	for laminated glass
10 years:	for toughened glass

Refer to the general section for the required form of 1237WA WARRANTY AGREEMENT and details of when completed warranty must be submitted.

Performance

1.5 ENERGY EFFICIENCY

Provide glazing to meet the energy requirements of NZS 4218 and NZBC H1/AS1 for housing small buildings.
Refer to SELECTIONS and schedules for location and type of glazing.

2 PRODUCTS

Materials

2.1 CLEAR FLOAT GLASS

Clear ordinary annealed transparent float glass for general window glazing. Thickness to NZS 4223.1 and NZS 4223. Supp 1.

2.2 TEXTURED, PATTERNED OR OBSCURE GLASS

Translucent, annealed, rolled glass with a decorative pattern on one surface.

2.3 LAMINATED GLASS

Grade A Safety Glass to AS/NZS 2208 with PVB or CIP resin interlayer.

2.4 TOUGHENED GLASS

Grade A Safety Glass to AS/NZS 2208.
Heat soaked toughened glass to NZS 4223.1, Appendix E required for critical areas.
Refer to SELECTIONS.

2.5 INSULATING GLASS UNITS (IGU'S)

To AS/NZS 4666, NZS 4223.2 and the IGU Manufacturers Association (IGUMA) requirements.
Marking to NZS 4223.2 as modified by NZBC B2/AS1, 3.5.

Materials, mirrors

2.6 MIRROR GLASS

Clear annealed mirror float glass, including silver, activation, passivation and two protective coats.

Materials, screens

2.7 GLASS SCREENS SHOWER & BATH

Proprietary shower / bath screens, formed to shape before toughening, complete with matching hardware.

Components, aluminium and uPVC glazing

2.8 GLAZING TAPE AND GASKETS

Single/double sided pressure sensitive self-adhesive low/medium/high density foam tapes/butyl tapes selected to suit the glazing detail to window manufacturers' requirements.

2.9 SETTING BLOCKS

Santoprene/Neoprene, 80-90 Shore A hardness, set at quarter points or to detail, to support the weight of glass panes.

Components, wall mounted glass (mirrors and splashbacks)

2.10 GLASS ADHESIVE

Adhesive mirror-mastic and double-sided adhesive tape.

3 EXECUTION

Conditions

3.1 GENERAL REQUIREMENTS

To NZS 4223.1, NZS 4223.3, NZS 4223.4. All external glazing to be wind and watertight on completion.

KDC - Approved Building Consent Document - BC210441 - Pg 254 of 336 - 30/08/2021 - ComplyNZ

3.2 DELIVERY

Keep glass dry and clean during delivery and bring on to site when ready to glaze directly into place. Comply also with the storage requirements set out in BRANZ BU 636.

3.3 GLASS CONDITION

All glass to have undamaged edges and surfaces.

3.4 GLASS THICKNESS

If not specifically stated in the glazing schedule determine the minimum thickness of glass for each sheet as required by NZS 4223.1, NZS 4223.3, NZS 4223.4 and NZS 4223. Supp 1. For windows tested to NZS 4211, ensure glass meets the requirements of the window testing.
Determine the final glass thickness based on whether wind loading or human impact considerations govern.

3.5 REBATE DIMENSIONS

Provide rebates for glazing to the widths and depths necessary for each situation including minimum glass edge cover to NZS 4223.1, Section 4 Glazing.

3.6 JOINTING, PUTTY AND SEALING MATERIAL COMPATIBILITY

Ensure jointing, putty and sealing materials are compatible with glass substrates. Confirm compatibility with laminated glass, IGUs and coatings.

Conditions - human impact safety requirements

3.7 SAFETY GLAZING, GENERAL REQUIREMENTS

Glazing of doors, side panels, low level and window seat glazing, bathrooms, stairwell landings and similar locations, to NZS 4223.3 for thickness and maximum areas of safety glass.

3.8 SAFETY GLAZING MATERIAL

Use only safety glazing materials defined in NZS 4223.3, that also comply with the relevant requirements of AS/NZS 2208. Ensure material is permanently marked and if cut by the distributor or installer mark each piece to NZS 4223.3, 2.8 Identification.

3.9 CONTAINMENT

Edge cover to comply with NZS 4223.1, Section 4 Glazing, table 5. Otherwise to NZS 4223.3, 2.3 Edge cover.

Assembly

3.10 WORKING OF GLASS

All working of glass as required in NZS 4223.1.

3.11 EDGE WORK AND BEVELLING

Edgework other than a clean cut. Refer to SELECTIONS/drawings for type.

3.12 SURFACE TREATMENT

Refer to SELECTIONS/drawings for finish.

3.13 SURFACE CUTTING

Refer to SELECTIONS/drawings for finish.

3.14 INSTALL SAFETY GLASS

To NZS 4223.3.

Application aluminium

3.15 INSTALL GLASS TO ALUMINIUM FRAMES

Install glass to NZS4223.1.

- Bead glaze to Section 4 Glazing.
- Channel glaze to Section 4 Glazing, and Section 5 for Framed, Unframed, Partly Framed Glass Assemblies.

Application - wall mounted glass (mirrors and splashbacks)

KDC - Approved Building Consent Document - BC210441 - Pg 255 of 336 - 30/08/2021 - ComplyNZ

3.16 WALL MOUNTED GLASS, SCREW FIXED

For mirrors and splashbacks, fix with proprietary zinc-plated steel countersunk-head screws, fitted with black neoprene washers with fine-threaded upstands to receive chrome plated dome screw covers.

3.17 WALL MOUNTED GLASS, ADHESIVE FIXED

For mirrors and splashbacks, fix with adhesive mirror-mastic and double-sided adhesive tape. Adhesive area 0.2 m2 per 1 m2 of glass to NZS 4223.3.

KDC - Approved Building Consent Document - BC210441 - Pg 256 of 336 - 30/08/2021 - ComplyNZ

Application miscellaneous

3.18 INSTALL GLASS SHOWER & BATH SCREENS

Install shower and bath screens and doors to manufacturer's requirements.

Finishing

3.19 SAFETY

Indicate the presence of transparent glass for the remainder of the construction period, with whiting, tape or signs compatible with the glass type.

Completion

3.20 TRADE CLEAN

Clean off or remove safety indicators at completion of the building.

3.21 REPLACE

Replace damaged, cracked or marked glass.

3.22 LEAVE

Leave work to the standard required by following procedures.

3.23 REMOVE

Remove debris, unused materials and elements from the site.

4 SELECTIONS

Performance - wind

4.1 WIND ZONE - NON-SPECIFIC DESIGN

Building wind zone: H (as determined from NZS 3604, NZS 4223.4)

Glass by type

4.2 CLEAR FLOAT GLASS

Refer to Manufacturer Specifications.

4.3 TEXTURED, PATTERNED OR OBSCURE GLASS

Refer to Manufacturer Specifications and drawings.

4.4 TOUGHENED GLASS

Refer to Manufacturer Specifications and drawings.

4.5 INSULATING GLASS UNITS (IGU'S)

Refer to Manufacturer Specifications and drawings.

Mirrors

4.6 MIRROR

Refer to Manufacturer and Client Specifications.

Splashbacks

4.7 SPLASHBACKS

Refer to Manufacturer and Client Specifications.

Bath and shower screens and doors

4.8 FRAMELESS GLASS SHOWER SCREENS AND DOORS

Refer to Manufacturer and Client Specifications.

KDC - Approved Building Consent Document - BC210441 - Pg 257 of 336 - 30/08/2021 - ComplyNZ

4710EW EARTHWOOL® GLASSWOOL INSULATION

1 GENERAL

This section relates to **Earthwool® glasswool** thermal and acoustic insulation systems including installation.
It includes:
Earthwool® glasswool insulation

- Earthwool® glasswool insulation: Underfloor Rolls with wind wash barrier
- Earthwool® glasswool insulation: Underfloor Quilted Batts with wind wash barrier
- Earthwool® glasswool insulation: External Wall Batts
- Earthwool® glasswool insulation: Internal Wall Batts
- Earthwool® glasswool insulation: Ceiling Batts
- Earthwool® glasswool insulation: Roof blankets

1.1 RELATED WORK

Refer to 3820 Carpentry

1.2 ABBREVIATIONS AND DEFINITIONS

Refer to the general section 1232 INTERPRETATION & DEFINITIONS for abbreviations and definitions used throughout the specification.

Documents

1.3 DOCUMENTS

Refer to the general section 1233 REFERENCED DOCUMENTS. The following documents are specifically referred to in this section:

NZBC C/AS1-C/AS2	Protection from fire
NZBC H1/AS1	Energy efficiency
NZBC H1/VM1	Energy efficiency
AS/NZS 3000	Electrical installations (Australian/New Zealand Wiring Rules)
AS/NZS 4859.1:2002	Materials for the thermal insulation of buildings - General criteria and technical provisions
AS/NZS 5110	Recessed Luminaire Barriers
AS/NZS 60695.11.5	Fire hazard testing - Test flames - Needle-flame test method - Apparatus, conformity test arrangement and guidance
NZS 4214	Methods of determining the total thermal resistance of parts of buildings
NZS 4218	Thermal insulation - Housing and small buildings
NZS 4220	Code of Practice for energy conservation in non-residential buildings
NZS 4246	Energy efficiency - Installing bulk thermal insulation in residential buildings

Documents listed above and cited in the clauses that follow are part of this specification. However, this specification takes precedence in the event of it being at variance with the cited document.

1.4 MANUFACTURER/SUPPLIER DOCUMENTS

Manufacturer and supplier documents relating to this part of the work:
BRANZ Appraisal 648 - Earthwool® glasswool Insulation
BRANZ Appraisal 975 - Earthwool® glasswool insulation: quilted underfloor batt.

CodeMark	GM-CM30095-RevA1 Refer to conditions and limitations listed in the CodeMark. Refer to CODEMARK CERTIFICATE for a list of Product datasheets and installation instructions
GreenTag	KNI-001-v2-2016

Manufacturer/supplier contact details

Company:	Knauf Insulation New Zealand
Web:	www.knaufinsulation.co.nz
Email (Technical):	tech.nz@knaufinsulation.com
Email (Sales):	sales.nz@knaufinsulation.com
Telephone:	0800 KNAUFI (562 834)

KDC - Approved Building Consent Document - BC210441 - Pg 258 of 336 - 30/08/2021 - ComplyNZ

Warranties

1.5 WARRANTY

Provide a warranty for:

50 years:	For unfaced Earthwool® glasswool insulation materials
15 years:	For Earthwool® glasswool insulation underfloor

- Provide this warranty on the manufacturer/supplier standard form (if not available then use the standard form in the general section 1237WA WARRANTY AGREEMENT)
- Commence the warranty from the date of practical completion of the contract works.

Refer to the general section 1237 WARRANTIES for additional requirements.

1.6 WARRANTY - INSTALLER/APPLICATOR

Provide an installer/applicator warranty:
For installation of insulation

- Provide this warranty on the installer/applicator standard form (if not available then use the standard form in the general section 1237WA WARRANTY AGREEMENT).
- Commence the warranty from the date of practical completion of the contract works.

Refer to the general section 1237 WARRANTIES for additional requirements.

Requirements

1.7 QUALIFICATIONS - GENERAL

Refer to 1270 CONSTRUCTION for requirements relating to experience, skill, and qualifications.

1.8 NO SUBSTITUTIONS

Substitutions are not permitted to any of the specified systems, components and associated products listed in this section.

Performance - thermal insulation

1.9 R-VALUE RATING

Refer to SELECTIONS for location, type, R-Value, and thickness.

Performance - acoustic insulation

1.10 SOUND RATING REQUIREMENTS

Provide sound rated systems as detailed in SELECTIONS.

Performance - Fire properties

1.11 FIRE PROPERTIES

Earthwool® glasswool insulation is non-combustible to test criteria under the 30's Needle Flame Test to AS/NZS 60695.11.5.

Compliance

KDC - Approved Building Consent Document - BC210441 - Pg 259 of 336 - 30/08/2021 - ComplyNZ

1.12 CODEMARK CERTIFICATE

Earthwool® glasswool meets the requirements of the NZBC when used in accordance with the conditions and limitations of its Certificate of Conformity. Refer to MANUFACTURER/SUPPLIER DOCUMENTS for CodeMark certificate.
The following Earthwool® glasswool Product Datasheets and Installation Instructions are listed in the CodeMark conditions and limitations:

- Acoustic:	Product datasheet ref: KINZ0914116DS, January 2017
- Ceiling batts:	Product datasheet ref: KINZ1213029DS, April 2017
- Ceiling Roll:	Product datasheet ref: KINZ0914115DS, January 2017
- Underfloor Roll:	Product datasheet ref: KINZ0616380DS, June 2016
- Wall:	Product datasheet ref: KINZ00914114DS, January 2017
- Multi-Use roll:	Product datasheet ref: KINZ0616396DS, June 2017
- Quilted underfloor batt:	Product datasheets ref KINZ0317511DS, August 2017
- Ceiling batt:	Installation instructions, ref: KINZ1017631MIS
- Ceiling Rolls:	Installation instructions, ref: KINZ1017632MIS
- Quilted Underfloor batt:	Installation instructions, ref: KINZ0817602MIS
- Underfloor Roll:	Installation instructions, ref: KINZ1017636MIS
- Wall batts:	Installation instructions, ref: KINZ1017633MIS

KDC - Approved Building Consent Document - BC210441 - Pg 260 of 336 - 30/08/2021 - ComplyNZ

2 PRODUCTS

Materials - Underfloor Thermal Insulation

Materials - External Wall Thermal Insulation

2.1 EARTHWOOL® GLASSWOOL INSULATION: WALL BATTS

A rectangular batt to NZBC H1/AS1, AS/NZS 4859.1:2002. Made using recycled glass and with ECOSE® Technology, it is suitable for thermal applications.
Refer to SELECTIONS for options.

Materials - Internal Wall Acoustic Insulation

2.2 EARTHWOOL® GLASSWOOL INSULATION: WALL BATTS

A rectangular batt to NZBC H1/AS1, AS/NZS 4859.1:2002. Made using recycled glass and with ECOSE® Technology, it is suitable for acoustic applications.
Refer to SELECTIONS for options.

Materials - Ceiling Thermal Insulation

2.3 EARTHWOOL® GLASSWOOL INSULATION: CEILING BATTS

A rectangular batt to NZBC H1/AS1, AS/NZS 4859.1:2002. Made using recycled glass and with ECOSE® Technology, it is suitable for thermal and acoustic applications.
Refer to SELECTIONS for options.

2.4 EARTHWOOL® GLASSWOOL INSULATION: CEILING ROLLS

An insulation roll to NZBC H1/AS1, AS/NZS 4859.1:2002. Made using recycled glass and with ECOSE® Technology, it is suitable for thermal and acoustic applications.
Refer to SELECTIONS for options.

2.5 EARTHWOOL® GLASSWOOL INSULATION: ROOF BLANKET

A rectangular batt to NZBC H1/AS1, AS/NZS 4859.1:2002. Made using recycled glass and with ECOSE® Technology, it is suitable for thermal and acoustic applications.
Refer to SELECTIONS for options.

Components

2.6 TAPES:

Polypropylene or similar strapping stapled across framing to retain insulation in wall and ceiling applications.

2.7
EARTHWOOL® GLASSWOOL INSULATION: QUILTED UNDERFLOOR BATTS WITH WIND-WASH BARRIER

Quilted Underfloor is a rectangular batt to NZBC H1/AS1, AS/NZS 4859.1:2002. Made using recycled glass and with ECOSE® Technology, the underfloor batt is completely wrapped in a breathable plastic film, providing a wind-wash barrier.
Refer to SELECTIONS for options.

KDC - Approved Building Consent Document - BC210441 - Pg 261 of 336 - 30/08/2021 - ComplyNZ

3 EXECUTION

Conditions

3.1 DELIVERY, STORAGE & HANDLING OF PRODUCTS

Refer to 1270 CONSTRUCTION for requirements relating to delivery. Storage and handling of products.

Do not use damaged or wet insulation material.

3.2 HAZARD & RISK MANAGEMENT

To Health and Safety at Work Act 2015 and take all safety precautions necessary to reduce potential hazards and risks. Refer also to NZS 4246, Appendix B. - Health and Safety.

3.3 ROUTINE MATTERS

Refer to 1250 TEMPORARY WORKS & SERVICES for protection requirements.
Refer to 1270 CONSTRUCTION for requirements relating to defective or damaged work, removal of protection and cleaning.

The building envelope must be maintained to a weathertight condition to ensure the insulation remains dry. Cavities must be clean and dry before fitting insulation.

3.4 PRE-INSTALLATION REQUIREMENTS

Check work previously carried out and confirm it is of the required standard for this part of the work.

Moisture content:	18% maximum for framing
Location and framing:	are free from moisture, that the cavities are not interconnected.
Insulation re-loft	Allow to re-loft/relax to specified thickness.
Discard	Damaged or wet insulation
Underlays	Ensure roof and wall underlays are installed, dry, clean, undamaged and free of debris before being covered with insulation
Vapour Barriers	Ensure vapour barrier forms one homogeneous sheet

Installation

3.5 INSTALLATION - GENERAL

Lay, install, fit and fix to NZBC H1/AS1: Energy efficiency, 2.0 Building thermal envelope, and to manufacturer requirements. Install in housing to NZS 4218 and NZS 4246. Do not cover vents. Allow a clear gap around metal flues as recommended by the fireplace manufacturer. Refer to manufacturer installation instructions and NZS 4246 for further details.

3.6 RECESSED LIGHT FITTING CLEARANCES - RESIDENTIAL

Residential recessed light fittings to AS/NZS 3000, 4.5.2.3.5;
- Existing fittings or retrofit situations, fittings maybe unmarked
- New fittings can only be labelled - CA 80, CA 90, CA 135, IC, IC-F & IC-4

Refer to clause INSULATION CLEARANCES GENERALLY for clearances.

KDC - Approved Building Consent Document - BC210441 - Pg 262 of 336 - 30/08/2021 - ComplyNZ

3.7 INSULATION CLEARANCES FROM HEAT SOURCES - GENERAL

Insulation may need to have a gap to some mechanical and electrical services and equipment, including ducts and chimneys. The gaps should be to the NZS 4246 based tables below or to the equipment manufacturer requirements if they require larger gaps. Smaller gaps to manufacturer requirements can be used for equipment specifically manufactured with heat shielding or similar (excludes light fittings). Installed gap not to be more than 50mm bigger than the required gap. The following tables are subject to:

- The requirements of NZS 4246.
- The insulation is exposed to the source of heat or equipment etc.
- Insulation, has passed the needle flame test to AS/NZS 60695.11.5 and/or is non-combustible.
- Gaps to hot surfaces may have to be increased with non-compliant insulation and plastic/polymeric type insulation (EPS, XPS, PIR, etc), check with insulation manufacturer.
- Gaps to hot surfaces may be able to be reduced with non-combustible insulation, check with equipment manufacturer.
- "Secure insulation" if required means, glue, mechanical fix, or provide fixed barriers at gap edge of insulation to hold in place. Rigid or semi rigid insulation may only need a firm friction fit (secure loose pieces).

INSULATION CLEARANCES FROM RECESSED LIGHT FITTINGS

Type of fitting	**Minimum insulation clearance**	**Comments**
Recessed, marked NON-IC, or unmarked	100mm(increase if over 100W)	NON-IC fittings and new or old unmarked & unknown fittings, and/or insulation. Secure insulation.
Recessed, CA 80, CA 90 or CA 135	Abut fittings	Do NOT cover the fittings
Recessed, IC, IC-F or IC-4	Abut & cover fittings	Ensure insulation complies
Recessed, marked Do-Not-Cover	Manufacturers clearances	Do not cover the fittings
Independent control gear	Place on top of insulation and 50mm from fitting	If not on top allow 50mm clearance to insulation, do not cover. Includes, transformers, ballasts & drivers etc. Maintain clearance by placing guard around control gear, refer to NZS 4246 figure 15.
Surface fittings not exposed to insulation	Nil	Where surface fittings are isolated from insulation by appropriate linings. Excludes high heat fittings.
Surface fittings & exposed insulation	200mm	This is exposed insulation to any part of the exposed fitting & bulb/tube (e.g. exposed light in an unlined basement). Secure insulation.

FOR MINIMUM INSULATION CLEARANCES TO INBUILT RECESSED HOT APPLIANCES - REFER TO NZS 4246

INSULATION CLEARANCES FROM EXTRACTS, VENTS, PIPES & ROOF UNDERLAY

Application	Minimum insulation clearance	Comments
Ducted fan motors	50mm	Includes ducted rangehoods, extractors etc. Applies to the motor unit and electrical enclosures (not the ducts).
Ducted fan ducts	Abut	Excludes motor unit and electrical enclosures.
Unducted fan motors usually discharging to ceiling space	200mm	Includes unducted, rangehoods, extractors etc, discharging into roof space. To prevent debris falling into motor. Clearance may be able to be reduced, by providing a fixed barrier around the vent.
Passive vents (still in use)	200mm	To prevent debris falling through. Clearance may be able to be reduced, with more cohesive insulation, like some of the rigid plastic types or providing a fixed barrier around the vent.
Plumbing penetrations through floors	100mm	Keep gap between pipe penetration and floor insulation in case of leaks.
Roofing material/underlay	25mm	From underside of roofing or flexible roofing underlay, to prevent wicking.

KDC - Approved Building Consent Document - BC210441 - Pg 263 of 336 - 30/08/2021 - ComplyNZ

Installation - Wall Framing

3.8 TIMBER FRAMING

Friction fit wall batt between framing members and linings. Cut on site to fill cavity and provide a close even fit. When cutting to fill a void, oversize by up to 10mm to ensure a tight fit. Ensure there is a friction fit on all faces of the insulation. If cavity depth is greater than the insulation nominal thickness, fix or strap the product to secure in accordance with installation instructions. Cut into smaller pieces for smaller spaces and around penetrations to achieve efficient thermal performance. Do not fold, tuck or compress the insulation. Refer to NZS 4246 for installation guidelines and Earthwool® glasswool insulation Product Data sheets listed in the CodeMark, for detailed installation instructions.

Installation - Ceilings/Skillion Roofs/Membrane Roofs and Below Decks.

3.9 SINGLE LAYER BATTS - BETWEEN CEILING FRAMING

Friction fit insulation between framing members. Cut across the roll to fit nogs and small spaces around penetrations. Leave no gaps and maintain full thickness of insulation over the whole of the installation. Leave gap around metal flues to the manufacturer requirements.

3.10 CEILING INSULATION EDGE DETAIL

Where perimeter of ceiling space is too low to allow full depth of insulation plus the 25mm air gap to the underlay, provide reduced perimeter insulation to NZS 4246.6.2 and maintain the 25mm gap.

3.11 BELOW MEMBRANE ROOFS AND DECKS - INSULATION CLEARANCES

Friction fit insulation between joists/rafters. Use a sharp craft knife to cut to required size or around penetrations if required. Maintain a minimum clearance of 20mm between the underside of the substrate (plywood etc) and any insulation to NZBC E2/AS1 clause 8.5.2

Installation - acoustic insulation

3.12 ACOUSTIC INSULATION - BATTS AND ROLLS

Friction fit batt, or roll, in place to completely fill the whole of the cavities, after the wall lining is fixed to one side of the partition. Slightly oversize to retain friction fit. Keep clean and undamaged until closed in. Close in as soon as possible after fixing.

Completion & Commissioning

3.13 COMPLETION MATTERS

Refer to 1270 CONSTRUCTION for completion requirements and if required commissioning requirements.
Earthwool® glasswool insulation packaging is recyclable.

4 SELECTIONS

For further details on selections go to www.knaufinsulation.co.nz
Substitutions are not permitted to the following, unless stated otherwise.

External Wall - Thermal Insulation

4.1 EARTHWOOL® GLASSWOOL INSULATION: EXTERNAL WALL BATTS

Location:	All External walls including garage
Brand:	Earthwool® glasswool insulation
R-value:	R 2.6
Thickness:	90 mm
Size:	To fit stud centres

Internal Walls - Acoustic Insulation

4.2 EARTHWOOL® GLASSWOOL INSULATION BATTS - FOR TIMBER FRAMED INTERNAL WALLS

Location:	All bedroom walls
Brand:	Earthwool® glasswool insulation
R-value:	R 2.6
Density:	20.0
Thickness:	90 mm
Size:	580 mm x 1160 mm

Ceiling - Thermal Insulation

4.3 EARTHWOOL® GLASSWOOL INSULATION: CEILING ROLLS

Location:	Entire ceiling
Brand:	Earthwool® glasswool
R-value:	R3.6
Thickness:	150mm
Dimensions:	1200mm x 7m

KDC - Approved Building Consent Document - BC210441 - Pg 264 of 336 - 30/08/2021 - ComplyNZ

4821 FLASHINGS

1 GENERAL

This section relates to the fabrication and installation of flashing systems not forming part of a proprietary system.

1.1 RELATED WORK

Refer to 4311 Profiled Metal Roofing
Refer to 4521AR APL Residential Aluminium Windows & Doors

Documents

1.2 DOCUMENTS

Refer to the general section 1233 REFERENCED DOCUMENTS. The following documents are specifically referred to in this section:

NZBC B2/AS1	Durability
NZBC E2/AS1	External moisture
AS/NZS 2728	Prefinished/prepainted sheet metal products for interior/exterior building applications - Performance requirements
AS 3566	Self-drilling screws for the building and construction industries - General requirements and mechanical properties
NZS 3604	Timber-framed buildings
NZMRM CoP	NZ Metal Roof and Wall Cladding Code of Practice

Requirements

1.3 QUALIFICATIONS

Work to be carried out by trades people experienced, competent and familiar with the materials and techniques specified.

1.4 VERIFY DIMENSIONS

Verify dimensions against site measurements prior to fabrication.

Standards of performance

1.5 DURABILITY REQUIREMENTS

Design and install the flashings appropriate for the durability applications in accordance with NZBC B2/AS1. The Building Code B2, 3.2 requires that all hidden elements have at least the same durability as that of the element that covers it. Refer to NZBC B2/AS1 Table 1: Durability Requirements of Nominated Building Elements and NZBC E2/AS1 Table 20 Material selection.

1.6 COMPATIBILITY REQUIREMENTS

Each flashing material shall be selected in accordance with NZBC E2/AS1 Table 20 to minimise corrosion. Refer to either NZS 3604 Clause 4.2 or AS/NZS 2728 for the relevant exposure conditions. For compatibility of materials in contact and subject to run-off, refer to NZBC E2/AS1 table 21 and NZBC E2/AS1 table 22.

1.7 PROTOTYPES - REVIEW

Refer to the general section 1270 CONSTRUCTION for details of how prototypes will be reviewed and how instructions to proceed will be given. For flashings where there are no specific details or drawings, provide full size prototypes of the flashings to integrate components into the weathertight system. Co-ordinate with the trades affected by the installation. Provide the prototype flashings to the contract administrator for review.

2 PRODUCTS

2.1 FLASHING MATERIALS

Acceptable materials for flashings are described in NZBC E2/AS1, 4.0. Material, grade and colour as detailed and scheduled. Ensure that materials used for flashings are compatible with the building and cladding materials and their fixings.

KDC - Approved Building Consent Document - BC210441 - Pg 265 of 336 - 30/08/2021 - ComplyNZ

2.2 FLASHING FABRICATION

Fabricate flashings generally to NZBC E2/AS1, 4.0, from a ductile grade of metal designed for lateral strength by folding, stiffening or ribbing on external edges, having a maximum un-stiffened width of 300mm. Provide all hooks, hems, kick outs, bird's beaks, stop ends, soft edges and turn downs etc. to NZBC E2/AS1, 4.0, or as shown on the drawings.

2.3 FIXINGS

Rivets, screws, nails and cleats to be compatible with the materials being fastened. Fasteners complying with the corrosion requirements of AS 3566 are suitable for use with ZINCALUME® steel products. Use only low carbon non-conductive sealing washers.

2.4 JOINTS - SEALANTS

Neutral Curing silicone or MS polymer sealant as required, with low resistance to compression and be-able to withstand large temperature variations. MS polymer sealant to be used where the sealant is exposed and the surrounding surfaces are to be subsequently painted or coated.

3 EXECUTION

Conditions

3.1 DELIVERY

Keep flashings dry in transit. Take delivery of flashings in an undamaged condition. Reject all damaged materials.

3.2 STORAGE

Store materials and accessories on a level, firm base, in dry conditions, well ventilated, out of direct sunlight and completely protected from weather and damage. Ensure storage areas are away from current work areas. Cover to keep dry until fixed.

3.3 HANDLING

Avoid distortion and contact with potentially damaging surfaces/substances. Do not drag flashings across each other, or across other surfaces. Protect edges, corners and surfaces from damage.

3.4 SUBSTRATE

Do not commence work until the substrate is of the standard required by the installer for the specified flashings, level and in true alignment.

3.5 PROTECT

Protect surfaces, window and door joinery, and finishes already in place, from the possibility of damage during the installation process.

3.6 CONFIRM LAYOUT

Before commencing work confirm the proposed installation of the flashings and expansion joints and other visual considerations of the finished work.

3.7 CO-ORDINATE INSTALLATION

Co-ordinate installation of flashings with associated trades.

Application

3.8 INSTALLATION

Install flashings in accordance with NZMRM CoP and in compliance with NZBC E2/AS1, 4.0 Flashings. For very high wind zones and where the pitch of the roof is below 15° the flashing joint laps shall be sealed with sealant at each end of the lap to prevent the ingress of water.

Refer to NZBC E2/AS1 Table 7 for general dimensions of flashings.

KDC - Approved Building Consent Document - BC210441 - Pg 266 of 336 - 30/08/2021 - ComplyNZ

3.9 FIXINGS

Fix flashings with fasteners appropriate to the situation. For fixing flashings with proprietary brackets or clips ensure they are aligned to allow for movement and are compatible with the flashing material.

Fix screws with the shank perpendicular to the surface of the flashing with the washer fitted firmly against the flashing. Screws to be compatible with the flashing material.

Rivets 'blind' or 'pop' are to be sealed when used. Aluminium rivets are compatible with zinc or AZ coated steel. Monel and stainless steel rivets can be used to fix galvanized steel flashings. Minimum diameter of rivet to be used is 4.0mm. Drill hole 1mm larger than the rivet size. Seal head of rivet with neutral cured silicone.

3.10 JOINTING - SEALANTS

Clean surfaces to be lapped using a solvent ensuring all traces of the solvent are removed with a clean rag. Apply sealant by gun in a continuous bead of approximately 5mm diameter. Width of sealant when compressed should not exceed 25mm. Sealant joints shall be mechanically fixed for strength. Refer to NZMRM CoP for details.

3.11 FINAL INSPECTION

A final inspection by the installer to take place after completion of the flashing work. Any defects or subsequent damage to be made good.

Completion

3.12 PROTECT

Protect new work from damage.

3.13 REPLACE

Replace all damaged or marked elements.

3.14 LEAVE

Leave work to the standard required for following procedures.

3.15 REMOVE

Remove debris, unused materials and elements from the site.

4 SELECTIONS

4.1 FLASHINGS

Type	Material and finish
General flashings:	0.55mm Colorsteel
Window/doors:	
- Head:	0.7mm aluminium
- Sill:	0.7mm aluminium
Meter box:	0.7mm aluminium
Barge:	0.55mm Colorsteel
Roof penetrations:	0.55mm Colorsteel

KDC - Approved Building Consent Document - BC210441 - Pg 267 of 336 - 30/08/2021 - ComplyNZ

5113G GIB® PLASTERBOARD LININGS

1 GENERAL

This section relates to the supply, fixing and jointing of GIB® plasterboard linings and accessories to timber and steel framed walls and ceilings to form:

- standard systems
- superior finish quality systems
- bracing systems
- fire rated garage boundary wall systems
- wet area systems
- GIBFix® Framing systems

KDC - Approved Building Consent Document - BC210441 - Pg 268 of 336 - 30/08/2021 - ComplyNZ

1.1 RELATED WORK

Refer to 3820 Carpentry
Refer to 3827E Ecoply Plywood Bracing System

1.2 ABBREVIATIONS AND DEFINITIONS

Refer to the general section 1232 INTERPRETATION & DEFINITIONS for abbreviations and definitions used throughout the specification.

The following abbreviations apply specifically to this section:

AWCINZ	Association of Wall and Ceiling Industries New Zealand

Documents

1.3 DOCUMENTS

Refer to the general section 1233 REFERENCED DOCUMENTS. The following documents are specifically referred to in this section:

NZBC C/AS2	Protection from fire
NZBC E2/AS1	External moisture
AS 1397	Continuous hot-dip metallic coated steel sheet and strip - Coatings of zinc and zinc alloyed with aluminium and magnesium
AS/NZS 2588	Gypsum plasterboard
AS/NZS 2589	Gypsum linings - Application and finishing
NZS 3604	Timber-framed buildings
AS/NZS 4600:2005	Cold-formed steel structures
ISO 5660.1	Reaction-to-fire tests - Heat release, smoke production and mass loss rate - Part 1: Heat release rate (cone calorimeter method)
ISO 5660.2	Reaction-to-fire tests - Heat release, smoke production and mass loss rate - Part 2: Smoke production rate (dynamic measurement)
BRANZ Technical Paper P21	BRANZ Technical Paper P21: A wall bracing test and evaluation procedure (2010)
NASH	Residential and Low-Rise Steel Framing Part 1 2010 Design Criteria

KDC - Approved Building Consent Document - BC210441 - Pg 269 of 336 - 30/08/2021 - ComplyNZ

1.4 MANUFACTURER/SUPPLIER DOCUMENTS

Manufacturer and Supplier documents relating to this part of the work.

- GIB® Site Guide (September 2018)
- GIB® Noise Control Systems (September 2017)
- GIB® Fire Rated Systems (October 2018)
- GIB Aqualine® Wet Area Systems (March 2007)
- GIB Toughline® Aqua (July 2018)
- GIB Ezybrace® Systems (2016)
- GIB Ezybrace® Bracing Software
- GIB Ezybrace® Systems (June 2011), with amendments (December 2014)
- GIB Ezybrace® for Steel Frame Housing (NASH) Software (2011)
- GIBFix® Framing System (2016)
- GIB Rondo® Metal Ceiling Batten Systems
- GIB-Cove®
- GIB RocTape®
- GIB Goldline™ Platinum Tape-on Trims (January 2006)
- GIB UltraFlex® high impact corner mould (September 2004)
- GIB® Tough Systems (Nov 2014)

BRANZ Appraisal 928 (2016)	GIB Ezybrace® Systems 2016
BRANZ Appraisal 427 (2007)	GIB Aqualine® Wet Area Systems
BRANZ Appraisal 928 (2016)	GIB Ezybrace® Systems 2016

GreenTag Certification — WWLCG001-001-A-2015 - GreenTag™ GreenRate / Level B for:

- GIB® Standard (10mm & 13mm)
- GIB Fyreline® (10mm, 13mm, 16mm & 19mm)
- GIB Braceline® (10mm & 13mm)
- GIB Noiseline® (10mm & 13mm)
- GIB Toughline® (13mm)
- GIB Wideline® (10mm & 13mm)

Copies of the above literature are available at:

Company:	Winstone Wallboards
Web:	www.gib.co.nz
Telephone:	0800 100 442

Requirements

1.5 NO SUBSTITUTIONS

Substitutions are not permitted to any specified GIB® systems, GIB® system components, GIB® plasterboard, associated GIB® products or GIB® accessories.

1.6 INSTALLER WORK SKILLS AND QUALIFICATIONS

GIB® plasterboard fixers and plasterers to be experienced competent workers, familiar with GIB® plasterboard lining systems installation and finishing techniques. Submit evidence of experience on request. For example:

- National Certificate of Interior Systems; or
- Certified Business member of AWCINZ.

Performance

1.7 INSPECTIONS AND ACCEPTANCE

Allow for inspection of the finished plasterboard surface:

- before applying sealer and
- before applying finish coatings or decorative papers,

so that after assessment of the type and/or angle of illumination and its effect on the completed decorative treatment, group approval and acceptance of the surface can be given.

1.8 BRACING REQUIREMENTS

Braced wall systems to NZS 3604 when tested to BRANZ Technical Paper P21, using:

- GIB Ezybrace® Systems (2016) and/or GIB Ezybrace® Bracing Software (2016)
- GIB Ezybrace® Systems (2011)
- GIB Ezybrace® for Steel Frame Housing (NASH) Software 2011 (to NASH Residential and Low-Rise Steel Framing Part 1 2010 Design Criteria)

Refer to drawings for location and type.

2 PRODUCTS

Materials

2.1 GIB® PLASTERBOARD

Gypsum plaster core encased in a face and backing paper formed for standard and water resistance use to AS/NZS 2588. Refer to SELECTIONS for location, type, thickness and finish.
GIB® Standard plasterboard
GIB Wideline® plasterboard
GIB Ultraline® high quality surface plasterboard
GIB Fyreline® fire resistant plasterboard
GIB Braceline® & GIB® Noiseline® dual purpose wall bracing & noise control plasterboard
GIB Aqualine® wet area plasterboard
GIB Toughline®
GIB Toughline® Aqua

Components

2.2 CEILING BATTENS

GIB® Rondo® metal ceiling battens, batten joiners and perimeter channel.

2.3 SCREWS

GIB® Grabber® drywall type screws as follows:

Grabber® type	Used for fixing:
High Thread	GIB Ezybrace® or Standard systems to timber
Self Tapping	Standard systems to light gauge steel or timber
Dual Thread Screws	GIBFix®, GIB Ezybrace®, or Standard systems, to light gauge steel or timber
Wafer Head Needle Tip	Light gauge metal to timber not directly under plasterboard
Pancake Head Drill Tip	Light gauge metal to light gauge metal directly under plasterboard

Refer to GIB® requirements for appropriate details.

2.4 TAPE ON TRIMS AND EDGES

GIB® Goldline™ tape-on trims
GIB® UltraFlex® high impact corner mould
GIB® Levelline® Tape on Trim

2.5 METAL ANGLE TRIMS

GIB® galvanized steel slim angle trims.

2.6 CONTROL JOINTS

GIB® Rondo® P35 control joints.
GIB® Goldline™ tape-on trims
GIB® plastic W-profile control joints.

Accessories

KDC - Approved Building Consent Document - BC210441 - Pg 270 of 336 - 30/08/2021 - ComplyNZ

2.7 ADHESIVE

Timber frame and/or steel frame:
GIBFix® One ultra low VOC water based wallboard adhesive
GIBFix® All-Bond solvent based wallboard adhesive

2.8 JOINTING COMPOUND

Bedding compound:	GIB Tradeset®, GIB Lite Blue®, GIB MaxSet®, GIB ProMix® All Purpose, GIB Plus 4®
Finishing compound:	GIB ProMix® All Purpose, GIB® Trade Finish®, GIB® Trade Finish® Lite, GIB ProMix® Lite, GIB® U-Mix, GIB Plus 4®, GIB Trade Finish® Multi
Cove:	GIB-Cove® Bond

2.9 JOINTING TAPE

GIB® jointing tape.

2.10 GAP FILLER

GIB® Gap Filler ultra low VOC multi-purpose acrylic flexible filler

3 EXECUTION

Conditions

3.1 DELIVERY, STORAGE & HANDLING OF PRODUCTS

Refer to 1270 CONSTRUCTION for requirements relating to delivery, storage and handling of products.

3.2 LEVELS OF PLASTERBOARD FINISH

Provide the selected plasterboard surfaces to the pre decorative levels of finish specified in AS/NZS 2589.

3.3 CONFIRM LEVELS OF PLASTERBOARD FINISH ACCEPTANCE

Before commencing work, agree in writing upon the surface finish assessment procedure towards ensuring that the quality of finish expectations are reasonable and are subsequently obtained and acceptable.

Do not apply decorative treatment until it is agreed in writing by the contractor, subcontractors and decorator that the specified plasterboard Level of Finish has been achieved.

"Levels of plasterboard finish" is a tool for specifying the required quality of finish when installing and flush stopping GIB® plasterboard **prior** to the application of a range of decorative finishes under various lighting conditions. Refer to **AS/NZS** 2589.

3.4 SUBSTRATE

Do not commence work until the substrate is plumb, level and to the standard required by the sheet manufacturer's requirements. Refer to GIB® Site Guide (September 2018).

3.5 TIMBER FRAME MOISTURE CONTENT

Maximum allowable moisture content to AS/NZS 2589 for timber framing at lining: 18% or less for plasterboard linings. Refer to NZBC E2/AS1 and GIB® Site Guide (Sept 2018).

3.6 PROTECTION

Protect surfaces; cabinetwork, fittings, equipment and finishes already in place from the possibility of water staining and stopping damage. Refer to GIB® Site Guide (Sept 2018).

Application

3.7 INSTALL CEILING BATTENS

Install to GIB® Rondo® Ceiling Batten Systems requirements.

3.8 LINING WALLS AND CEILINGS GENERALLY

Form to GIB® Site Guide (September 2018). Ensure bulk insulation thickness shall not exceed that of the wall framing.

KDC - Approved Building Consent Document - BC210441 - Pg 271 of 336 - 30/08/2021 - ComplyNZ

3.9 BOARD ORIENTATION

Minimise joints by careful sheet layout using the largest sheet sizes possible, and generally fixing horizontally. Where part sheets are required for various stud heights they should be positioned so the cut sheet is as low as possible to keep joints below eye level.

3.10 FORM WET AREA SYSTEMS

Form to GIB Aqualine® Wet Area Systems requirements.

3.11 FORM BRACING SYSTEMS

Form bracing systems to:

- GIB Ezybrace® Systems (2016)

3.12 FORM CONTROL JOINTS

Form control joints to GIB® Site Guide (September 2018) requirements.

3.13 INSTALL TAPE-ON TRIMS

Install to GIB® Goldline™ Tape-on trims literature and/or GIB® Ultraflex high impact corner mould literature.

Finishing

3.14 FINISHING GENERALLY

To GIB® Site Guide (September 2018) and AS/NZS 2589.

Completion & Commissioning

3.15 COMPLETION MATTERS

Refer to 1270 CONSTRUCTION for completion requirements and if required commissioning requirements.

4 SELECTIONS

Plasterboard

4.1 GIB® STANDARD SYSTEMS WALLS

Location	Plasterboard type / Lining requirements	Thickness	Finish Level
All Ceilings except Bathroom, Kitchen and Laundry	GIB® Standard plasterboard	10mm	Level 4

4.2 GIB® WATER RESISTANT SYSTEMS WALLS

Location	Plasterboard type / Lining requirements	Thickness	Finish Level
Bathroom, Kitchen and Laundry	GIB Aqualine® plasterboard	10mm	Level 4

4.3 GIB® STANDARD SYSTEMS CEILINGS

Location	Plasterboard type / Lining requirements	Thickness	Finish Level
All Ceilings except Bathroom, Kitchen and Laundry	GIB® Standard plasterboard	13mm	Level 4

4.4 GIB® WATER RESISTANT SYSTEMS CEILINGS

Location	Plasterboard type / Lining requirements	Thickness	Finish Level
Bathroom, Kitchen and Laundry	GIB Aqualine® plasterboard	13mm	Level 4

KDC - Approved Building Consent Document - BC210441 - Pg 272 of 336 - 30/08/2021 - ComplyNZ

4.5 GIB® BRACING SYSTEMS

Refer to:

- GIB Ezybrace® Systems (2016)
- GIB Ezybrace® Systems (2011)

For bracing element location refer to drawn documentation.

Accessories

4.6 GIB® RONDO® CEILING BATTENS

Brand/type: GIB® Rondo® Ceiling battens

4.7 GIB® TAPE ON EDGE OR CORNER TRIMS

Brand/type: Paper Faced Metal Trims

4.8 GIB® EDGE PROFILES

Brand/type: Square Stop

KDC - Approved Building Consent Document - BC210441 - Pg 273 of 336 - 30/08/2021 - ComplyNZ

5151 INTERNAL TRIM

1 GENERAL

This section relates to simple lengths of trim fixed on site as of isolated internal members, with simple end joints.
It includes:

- timber
- MDF

1.1 RELATED WORK

Refer to 3820 Carpentry
Refer to 5113G GIB Plasterboard Linings

Documents

1.2 DOCUMENTS

Refer to the general section 1233 REFERENCED DOCUMENTS. The following documents are specifically referred to in this section:

NZBC C/AS1, C/AS2	Protection from fire
NZS 3602	Timber and wood-based products for use in building
NZS 3604	Timber-framed buildings
NZS 3610	Specification for profiles of mouldings and joinery

2 PRODUCTS

Materials

2.1 TIMBER TRIM

To NZS 3610 and to profiles detailed on the drawings. Timber species, grade and treatment to NZS 3602.

Components

2.2 NAILS

Bright steel to dimension requirements of NZS 3604. Use galvanized where prone to dampness.

2.3 BRADS

Bright steel of a length three times the thickness of the member being fixed. Use cadmium plated where prone to dampness.

2.4 SCREWS, STEEL

Bright steel of a length to penetrate the substrate up to the shank. Use stainless steel in wet areas.

2.5 SCREWS, CHROME PLATED

Chrome plated of a length to penetrate the substrate up to the shank.

3 EXECUTION

Conditions

3.1 GENERALLY

To comply with NZS 3604, except as varied in this specification. Execution to include those methods, practices and processes contained in the unit standards for the National Certificate in Carpentry and the National Certificate in Joinery (cabinetry, exterior joinery, stairs).

3.2 STORAGE

Take delivery of trims undamaged and unmarked and store on site under cover, away from moisture, heat and direct sunlight in adequately ventilated area and clear of areas where work is in progress, to ensure materials are of the required standard when fixed in place.

KDC - Approved Building Consent Document - BC210441 - Pg 274 of 336 - 30/08/2021 - ComplyNZ

3.3 ACCLIMATISE MATERIALS

Remove materials from packaging, separate and allow to acclimatise in the proposed installation area for 48 hours minimum prior to installation.

3.4 ENSURE

Ensure that the substrate to trims will allow work of the required standard. If it does not, do not proceed until the substrate has been remedied.

KDC - Approved Building Consent Document - BC210441 - Pg 275 of 336 - 30/08/2021 - ComplyNZ

Application - Generally

3.5 INSTALL TIMBER TRIM

Use full lengths. Fit with scribed internal joints, mitred external joints and, mitred and returned at stop ends. Fix plumb, level and true to line and face using nails or brads to suit. Leave secure and with no movement possible.

Finishing

3.6 PUNCH

Punch all nail heads below the face of trim ready to receive stopping, as specified under painting preparation.

3.7 COUNTERSINK

Countersink screw heads not less than 2mm below the faces of trim to be painted. Stop and finish off flush with the face, as specified under painting preparation.

3.8 PELLETING

Countersink screw head 6mm below the faces of trim which is to be clear finished. Glue in grain-matched pellets not less than 6mm thick and cut from matching timber. Finish off flush with the face.

Completion

3.9 LEAVE

Leave the whole of this work free of blemishes, undamaged and to the standard of finish required for following procedures.

3.10 PROTECTION

Protect the completed work and make good before any surface finish is applied.

3.11 REPLACE

Replace damaged or marked elements.

3.12 REMOVE

Remove debris, unused materials and elements from the site.

4 SELECTIONS

4.1 INTERNAL TIMBER TRIM

Architrave:	40x10mm single bevel finger jointed, paint finish
Skirting:	60x10mm single bevel finger jointed, paint finish

5230 INTERIOR DOORS

1 GENERAL

This section relates to the supply and installation of interior doors.

1.1 RELATED SECTIONS

Refer to 3820 Carpentry
Refer 5113G GIB Plasterboard Linings

1.2 DOCUMENTS

Refer to the general section 1233 REFERENCED DOCUMENTS. The following documents are specifically referred to in this section:

NZS 3602	Timber and wood-based products for use in building
NZS 3610	Specification form profiles of mouldings and joinery

2 PRODUCTS

2.1 TIMBER

To NZS 3602.

2.2 PROFILES, FACINGS, SCRIBERS AND ARCHITRAVES

Traditional profiles to NZS 3610. Proprietary profiles and special profiles as detailed. Pencil radius corners of profiled schedules for paint finish.

2.3 DOORS, PAINTED

Doors as scheduled (without clashing strips).

2.4 CAVITY SLIDERS

Doors hung within a proprietary cavity slider frame and complete with brand-matched sliding door gear.

2.5 DOOR HINGES

Size and gauge to carry door. 3 hinges per door.

2.6 SLIDING DOOR GEAR

To suit door/sash size and glazed weight and as detailed.

3 EXECUTION

3.1 SITE MEASURE

Confirm framed openings on site for dimension, plumb and straightness prior to fabrication or ordering of timber joinery. Confirm lintel head and sill deflection for sliding or bi-fold door systems is within the manufacturer's specified tolerances. Provide not less than 10mm unless otherwise required.

3.2 EXECUTION GENERALLY

Manufacture to the methods, practices and processes contained in the unit standards for the National Certificate in Carpentry and the National Certificate in Joinery (cabinetry, exterior joinery, stairs).

3.3 FACTORY FIT HARDWARE

Factory fit the following where specified: -

- Hinges

3.4 FACTORY FINISHING

Before delivery to site: -

- Brace square and provide protection to assemblies during delivery to site. Where factory glazed, indicate the presence of transparent glasses with whiting, tape or signs compatible with the glass type.

Internal doors

KDC - Approved Building Consent Document - BC210441 - Pg 276 of 336 - 30/08/2021 - ComplyNZ

3.5 INTERNAL JOINERY FRAMES

Fabricate as detailed. Wedge and rigidly fix in place without distortion, plumb, and true to line and face. Pre drill for fixings through frame. Countersink and plug frames scheduled for clear finish.

3.6 DOOR FRAMES, SOLID REBATED

Fabricate as detailed. Hang doors to operate freely on hinges, sliding, or bi-fold gear and to the door manufacturer's requirements. Pre drill for fixings through frame. Countersink and plug frames scheduled for clear finish. Fit hardware.

3.7 DOOR LINERS

Heads and jambs finished minimum 18mm, with 10mm planted door stops. Width to match width of lined walls. Hang doors on hinges, sliding, or sliding-folding gear to the door manufacturer's requirements and to operate freely. Countersink and plug frames scheduled for clear finish. Fit hardware.

3.8 DOOR LINERS, EXTENDED

Heads and jambs finished 30mm, rebated for wall linings and extended a minimum of 10mm. 10mm planted door stops. Hang doors on hinges, sliding and bi-fold gear to the door manufacturer's requirements and to operate freely. Countersink and plug frames scheduled for clear finish. Fit hardware.

3.9 CAVITY SLIDERS

Install in accordance with the door manufacturer's requirements, allowing for removal of top trim for maintenance.

Completion

3.10 CHECK

Check and adjust operation of all sashes, doors, hardware and furniture.

3.11 TEMPORARY PROTECTION

On completion remove any temporary protection and leave ready for following work.

4 SELECTIONS

4.1 HOLLOW CORE DOOR, PAINT FINISH

Refer to Client and Manufacturer Specifications.

4.2 CAVITY SLIDER DOOR

Refer to Client and Manufacturer Specifications.

4.3 SLIDING DOOR GEAR

Refer to Client and Manufacturer Specifications.

Accessories

4.4 DOOR HINGES

Interior doors

Type:	Loose pin
Size:	89mm
Material:	Zinc-plated steel
Pin:	Loose-pin zinc-plated steel

KDC - Approved Building Consent Document - BC210441 - Pg 277 of 336 - 30/08/2021 - ComplyNZ

5510 JOINERY & PROPRIETARY FIXTURES

1 GENERAL

This section relates to custom joinery fixtures and proprietary fixtures.
It includes:

- fabrication, including off site finishing and installation of cabinetwork and joinery items
- assembly, placing, installation of proprietary fixtures
- fitting out of specialty spaces and cupboards
- fabrication and installation of timber staircases.

Documents

1.1 DOCUMENTS

Refer to the general section 1233 REFERENCED DOCUMENTS. The following documents are specifically referred to in this section:

NZBC D1/AS1	Access routes
AS/NZS 1859.2	Reconstituted wood based panels - Specifications - Dry processed fibreboard
AS/NZS 1860.1	Particleboard flooring - Specifications
NZS 3602	Timber and wood-based products for use in building

2 PRODUCTS

2.1 MEDIUM DENSITY FIBRE BOARD, WOOD VENEER

Urea-formaldehyde resin bonded wood fibre sheet to AS/NZS 1859.2 overlaid with natural wood veneer.

2.2 GLUES AND ADHESIVES

As approved by the manufacturer for the timber, timber product, or pre-finished timber product joint being used.

3 EXECUTION

3.1 JOINERY FIXTURES GENERALLY

Execution to include those methods, practices and processes contained in the current syllabus for the National Certificate in Carpentry and the National Certificate in Joinery (cabinetry, exterior joinery, stairs). Take responsibility for the completed joinery fixtures including fittings included within fixtures and the on site installation.

3.2 SITE MEASURE

Site check and confirm dimensions after wall linings have been fixed. Verify positions of electric power outlets, wiring to light fittings included in joinery fixtures, water supplies and waste pipe locations.

3.3 FABRICATION QUALITY

Carry out machining within the practices required for the particular timber, wood product or pre-finished wood product being used. Machine drill and cut holes and recesses and form joints to the componentry manufacturer's requirements. Ensure work is accurate, square and true to line and face.

3.4 FABRICATE JOINERY FIXTURES

Carry out jointing, dowelling and other operations necessary for the proper assembly of the fittings as detailed, with fixings concealed unless otherwise detailed. Use glue joints where provision for shrinkage is not required, with contact surfaces, glueing and pressure all applied to the glue manufacturer's requirements. Locate and drive connectors and fasteners to the bolt manufacturer's requirements. Scribe fit adjustable shelves with 4 shelf pins and locate force fit pin holes at 50mm maximum centres in solid cheeks. Hang doors on concealed hinges.

KDC - Approved Building Consent Document - BC210441 - Pg 278 of 336 - 30/08/2021 - ComplyNZ

3.5 MAKE CUT OUTS FOR APPLIANCES AND FITTINGS

Obtain fitting templates from the appliances and other fittings to be installed within joinery fixtures and bench tops. Ensure appliances and fittings can be installed with the required tolerances and clearances. Where bench tops are being provided under other work sections, provide templates and confirm dimensions to others.

3.6 TRANSIT AND DELIVERY

Load, transport and unload fittings without distortion or damage and keep covered to protect from the weather. Do not deliver fittings until floor, wall and ceiling surfaces are in place and the fittings can be placed in their final location.

3.7 ASSEMBLE PROPRIETARY ITEMS

Check all components are included. Assemble to manufacturer's instructions and to achieve finished item.

3.8 INSTALL JOINERY FIXTURES

Scribe fit on site and install level, square, plumb and true to line and face.

3.9 LINEN CUPBOARD

Fit out with 2 full depth 19mm x 70mm timber slat shelves on ex 25mm scotia bead along ends. Shelf heights as shown on the drawings.

4 SELECTIONS

4.1 JOINERY PROPRIETARY ITEMS

Refer to Client and Manufacturer Specifications

4.2 MEDIUM DENSITY FIBRE BOARD, WOOD VENEER

Refer to Client and Manufacturer Specifications

KDC - Approved Building Consent Document - BC210441 - Pg 279 of 336 - 30/08/2021 - ComplyNZ

6221M MAPEI® TILING SOLUTIONS

1 GENERAL

This section relates to floor and wall tiling systems with Mapei® tiling products:

- primers / sealers
- acoustic underlays
- wet area membranes
- adhesives
- grouts
- sealants

KDC - Approved Building Consent Document - BC210441 - Pg 280 of 336 - 30/08/2021 - ComplyNZ

Documents

1.1 DOCUMENTS

Refer to the general section 1233 REFERENCED DOCUMENTS. The following documents are specifically referred to in this section:

NZBC D1/AS1	Access routes
NZBC E2/AS1	External moisture
NZBC E3/AS1	Internal moisture
AS 3740	Waterproofing of wet areas within residential buildings
AS 3958.1	Ceramic tiles - Guide to the installation of ceramic tiles
NZS 4121	Design for access and mobility - Buildings and associated facilities
BRANZ	Good practice guide: Tiling

1.2 MANUFACTURER/SUPPLIER DOCUMENTS

MBP (NZ) Ltd. documents relating to this part of the work:
Mapei® catalogue - Products for Ceramics and Stone Products
Mapei® product Technical Data Sheets
BRANZ Appraisal 484 - Mapegum WPS, Mapelastic, Mapelastic Smart, Mapelastic Turbo and Mapelastic AquaDefense Wet Area Membranes
BRANZ Appraisal 485 - Mapelastic, Mapelastic Smart and Mapelastic Turbo External Waterproofing Membranes

Manufacturer/supplier contact details

Company:	MBP (NZ) Ltd.
Web:	www.mbpltd.co.nz
Email:	enquiries@mbpltd.co.nz
Telephone:	09 921 1994

Warranties

1.3 WARRANTY - MANUFACTURER/SUPPLIER

Provide a tile manufacturer/supplier warranty:

2 years:	For tiling products

- Provide this warranty on the manufacturer/supplier standard form.

Refer to the general section 1237 WARRANTIES for additional requirements.

1.4 WARRANTY - MANUFACTURER/SUPPLIER

Provide a Mapei® products manufacturer/supplier warranty:

15 years:	For Mapelastic AquaDefense, Mapelastic Smart and Mapegum WPS
10 years	For other Mapei® tiling products

- Provide this warranty on the manufacturer/supplier standard form.

Refer to the general section 1237 WARRANTIES for additional requirements.

1.5 WARRANTY - INSTALLER/APPLICATOR

Provide an installer/applicator warranty:
2 years: For workmanship

- Provide this warranty on the installer/applicator standard form.
- Commence the warranty from the date of practical completion of the contract works.

Refer to the general section 1237 WARRANTIES for additional requirements.

Requirements

1.6 QUALIFICATIONS WORKERS – MANUFACTURER / SUPPLIER REQUIREMENTS

Workers to be approved MBP (NZ) Ltd. applicators. Refer to 1270 CONSTRUCTION for additional requirements relating to qualifications.

1.7 NO SUBSTITUTIONS

Substitutions are not permitted to any of the specified Mapei® systems, components and associated products listed in this section.

1.8 DEFLECTION CRITERIA FOR SUSPENDED FLOORS

Check that the floor is rigid enough for the tiling. Deflection of suspended floors should not exceed 1/360th of the span under dead load and live load.

Performance

1.9 INTERNAL / EXTERNAL MOISTURE

Wet area membranes under tiled areas to AS 3740, NZBC E2/AS1, NZBC E3/AS1 and to BRANZ Good Tiling Practice.

Quality control and assurance

1.10 INSPECTIONS

as per Kaipara District Council Building Consent

2 PRODUCTS

Materials - floor covering

2.1 TILES

Refer to SELECTIONS for option.

Levelling compounds

2.2 SELF - LEVELING COMPOUND - WOODEN FLOORS

Fiberplan, a fibre-reinforced ultra-fast hardening self-levelling smoothing compound for thicknesses from 3mm to 10mm.

2.3 TROWEL APPLIED LEVELING COMPOUND - SHORT COVERING TIME

Nivorapid, an ultra-fast drying thixotropic trowel applied cementitious leveling mortar for thicknesses from 3mm to 20mm. Interior application only.

2.4 TROWEL APPLIED SMOOTHING & REPAIR COMPOUND - Q

Planitop Smooth & Repair R4, rapid setting fibre reinforced trowel applied levelling mortar for horizontal and vertical, internal and external concrete substrates, for thicknesses from 3mm to 40mm.

2.5 TROWEL APPLIED SMOOTHING AND LEVELING COMPOUND - QUICK SETTING

Planitop Fast 330, quick-setting, fibre-reinforced trowel applied levelling mortar of cementitious binders, aggregate, synthetic resin and additives for thicknesses from 3 to 30mm. For interior and exterior application.

KDC - Approved Building Consent Document - BC210441 - Pg 281 of 336 - 30/08/2021 - ComplyNZ

2.6 SELF - LEVELING COMPOUND - HEAVY LOAD USES

Ultraplan, an ultra-fast hardening self-levelling smoothing compound from 1mm to 10mm. For installing onto internal concrete substrates only.

2.7 SELF - LEVELING ECO COMPOUND

Ultraplan Eco, an ultra-fast hardening self-levelling smoothing compound with very low VOC content for thicknesses from 1mm to 10mm. For installing onto internal concrete substrates only.

2.8 HIGH BUILD LEVELING COMPOUND - APPLICATIONS

Ultraplan Maxi, an ultra-fast hardening self-levelling smoothing compound for thicknesses from 3mm to 30mm. For installing onto internal concrete substrates only.

2.9 HIGH BUILD LEVELING COMPOUND - HEAVY LOADS

UC Leveller, fast hardening self-levelling compound for thicknesses from 3mm to 70mm. For installing onto internal concrete substrates only.

2.10 SCREED BINDER - 24 HOUR CURE

Mapecem, a fast setting and drying (24 hour cure) hydraulic binder for shrinkage-compensated screeds.

2.11 PRE-BLENDED SCREED - 24 HOUR CURE

Mapecem Pronto, pre-blended ready to use rapid setting shrinkage compensated screed for internal and external applications.

2.12 SCREED - 4 DAY CURE

Topcem, a fast setting and drying (4 day cure) hydraulic binder for shrinkage-compensated screeds.

2.13 CONCRETE/SAND & CEMENT SCREED ADMIXTURE - IMPROVED ADHESION

Planicrete, a synthetic-rubber latex for the improved adhesion of cement mixes and bonding slurries for bonded screeds to concrete substrates for interior and exterior application.

Primers/sealers

2.14 INTERIOR WET AREA PRIMER

Primer S, a waterproofing primer in water dispersion.

2.15 GENERAL PURPOSE PRIMER

Primer 3296, acrylic primer in water dispersion for porous substrate for use in interior and exterior applications.

2.16 LEVELING COMPOUND PRIMER

Eco Prim T Plus, acrylic primer in water dispersion to improve adhesion of leveling compounds on absorbent and non-absorbent substrates, for interior use only.

2.17 NON-POROUS SUBSTRATE PRIMER

Mapeprim SP, two component solvent free primer for improved adhesion for interior use only.

2.18 NON-POROUS SUBSTRATE PRIMER - SINGLE COMPONENT

ECO Prim Grip, one component acrylic primer of synthetic resin in water dispersion for interior and exterior use.

2.19 MOISTURE BARRIER EPOXY-CEMENTITIOUS PRIMER

Triblock P, a three-component, epoxy-cementitious primer for damp substrates.

2.20 MOISTURE BARRIER EPOXY PRIMER & PROTECTIVE COATING

Planiseal MR, two component water based epoxy primer and moisture barrier for positive and negative hydrostatic pressure for interior and exterior use.

Adhesives

2.21 RAPID SETTING ADHESIVE - CERAMIC TILES/NATURAL STONE

Granirapid, a high performance, deformable, fast setting and hydrating two- component cementitious adhesive.

KDC - Approved Building Consent Document - BC210441 - Pg 282 of 336 - 30/08/2021 - ComplyNZ

2.22 CEMENT BASED POWDER ADHESIVE AND ADDITIVE

Kerabond Plus, a cement based powder mixed with Isolastic, a latex additive to impart elasticity.

2.23 NON-POROUS SUBSTRATE SPECIAL PURPOSE ADHESIVE

Keralastic T, a high performance, two component, polyurethane adhesive for ceramic tiles and natural stone.

2.24 MULTI SUBSTRATE CEMENT BASED ADHESIVE

Keraflex Maxi S1, a high performance, deformable cementitious adhesive with extended open time and no vertical slip for ceramic tiles and stone material, with Low Dust Technology.

2.25 CEMENT BASED POWDER ADHESIVE AND ADDITIVE - RAPID SETTING

Keraquick S1 zero, a high performance, deformable, fast setting cementitious adhesive with no vertical slip, mixed with Latex Plus, a latex admixture introducing elasticity to provide improvement of deformability.

2.26 EPOXY ADHESIVE

Kerapoxy Adhesive, a two component epoxy adhesive with no vertical slip for ceramic tiles and natural stone material.

2.27 PREMIXED ADHESIVE

Ultramastic III, a high performance, ready to use paste adhesive with no vertical slip and extended open time, for ceramic tiles.

2.28 CEMENT BASED ADHESIVE – MOSAICS

Adesilex P10, a high performance white cementitious adhesive with no vertical slip for bonding of glass, ceramic and marble mosaics.

2.29 CEMENTITIOUS DEFORMABLE ADHESIVE - TILES

Ultralite S1, one component lightweight deformable cement and synthetic resin based adhesive for use in interior and exterior applications.

2.30 CEMENTITIOUS HIGHLY DEFORMABLE ADHESIVE - TILES

Ultralite S2, one component lightweight highly deformable cement and synthetic resin based adhesive for use in interior and exterior applications including external facade tiling.

2.31 CEMENTITIOUS HIGHLY DEFORMABLE RAPID SETTING ADHESIVE - TILES

Ultralite S2 Quick, one component lightweight highly deformable rapid setting cement and synthetic resin adhesive for use in interior and exterior applications including external facade tiling.

Grouts

2.32 POLYMER-MODIFIED MULTI-PURPOSE CEMENTITIOUS GROUT

Ultracolor Plus, a fast setting and drying, high performance, polymer-modified, anti-efflorescence, water-repellent grout for joints from 2mm to 10mm, with DropEffect and anti-mould with BioBlock technology.

2.33 EPOXY GROUT

Kerapoxy, a high performance, two-component, acid-resistant epoxy grout for joints of at least 3mm, for ceramic tiles and natural stone material.

Sealants

2.34 MULTI-PURPOSE SILICON SEALANT

Mapesil AC and Primer FD, a solvent-free, acetic cross-linking mildew-resistant silicon sealant with an associated adhesive enhancing primer.

2.35 NEUTRAL SILICON SEALANT - NATURAL STONE

Mapesil LM, an odourless one-component neutral cross-linking, silicon sealant for natural stone.

2.36 SINGLE COMPONENT POLYURETHANE SEALANT

Mapeflex PU45, a single component, thixotropic, rapid hardening polyurethane sealant and adhesive with a high modulus of elasticity.

KDC - Approved Building Consent Document - BC210441 - Pg 283 of 336 - 30/08/2021 - ComplyNZ

2.37 SINGLE COMPONENT POLYMER-BASED SEALANT AND ADHESIVE

Mapeflex MS45, a single component flexible, thixotropic, quick-hardening sililated polymer-based hybrid sealant and adhesive with a high modulus of elasticity.

Components - waterproofing

2.38 ADHESIVE

Adesilex LP, adhesive to joint Mapeband Blue rubber tape.

2.39 WATERPROOFING TAPE - MAPEBAND SA

Mapeband SA, an alkali resistant butyl self-adhesive waterproof tape.

2.40 WATERPROOFING MEMBRANE SYSTEM - INTERIOR USE

Mapegum WPS, a fast drying, synthetic resin-based liquid elastic membrane for interior waterproofing. To waterproof edges and expansion joints use Mapeband Easy, Mapeband Blue or Mapeband SA

2.41 WATERPROOFING MEMBRANE SYSTEM - INTERIOR USE

Mapelastic AquaDefense, a one component, solvent-free, ready-to-use, quick drying synthetic resin based paste in water dispersion for interior applications. Provides a waterproofing layer to concrete, concrete block, cementitious screeds and render, plasterboard and fibre cement board before laying ceramic, stone and mosaic tiles. To waterproof edges and expansion joints apply Mapeband Easy, Mapeband Blue or Mapeband SA.

2.42 WATERPROOFING MEMBRANE - MULTI PURPOSE USE

Mapelastic Smart, a two component flexible cementitious waterproofing membrane, for interior and exterior ceramic tile and natural stone To reinforce waterproof protection layers and anti-fracture layers use Mapenet 150 waterproof reinforcing mesh or Mapetex Sel. To waterproof edges and expansion joints use Mapeband SA (do not use Mapeband SA for areas of full immersion).

Components - cleaning

2.43 GROUT & TILE CLEANING AGENT

Keranet, an acid-based general tile cleaner.

2.44 CLEANER

Kerapoxy Cleaner, a high performance cleaner for epoxy grout.

2.45 SOLVENT GEL

Pulicol 2000, a solvent based gel for removing old natural and synthetic resin-based adhesives, paint and grouts/grout residue.

Accessories

2.46 STRIPS AND WEATHERBARS

Unless otherwise specified edge strips, floor finish divider strips and weather bars shall be aluminium.

2.47 EXPANSION JOINT, METAL AND RUBBER

Clear anodised aluminium/brass with metal anchor to set into in-situ concrete, cement screed/bed and complete with rubber infill.

2.48 EXPANSION JOINT, METAL AND COMPOUND

Aluminium/brass angles with high density foam rubber insert and jointing compound.

2.49 EXPANSION JOINT, PLASTIC

Rigid stabilised PVC sides with flexible central section.

3 EXECUTION

Conditions

KDC - Approved Building Consent Document - BC210441 - Pg 284 of 336 - 30/08/2021 - ComplyNZ

KDC - Approved Building Consent Document - BC210441 - Pg 285 of 336 - 30/08/2021 - ComplyNZ

3.1 DELIVERY, STORAGE & HANDLING OF PRODUCTS

Refer to 1270 CONSTRUCTION for requirements relating to delivery, storage and handling of products.

3.2 ROUTINE MATTERS

Refer to 1250 TEMPORARY WORKS & SERVICES for protection requirements.
Refer to 1270 CONSTRUCTION for requirements relating to defective or damaged work, removal of protection and cleaning.

3.3 STANDARDS AND TOLERANCES

Refer to the general section 1270 CONSTRUCTION for general requirements.
Check that maximum variation in the plane of the substrate is no greater than ±4mm in 2 linear metres before commencing tiling.

3.4 CHECK TILES

Check tiles to ensure that they are as specified, from the same batch, of a consistent colour and pattern and sufficient to complete the work. Reject tiles that vary widely in colour or pattern. Reject tiles that are damaged.

3.5 CONFIRM LAYOUT

Before commencing work confirm the proposed layout of tiles and expansion joints and other visual considerations of the finished work.

3.6 BACKGROUND MATERIALS

Ensure that the installation of background materials and substrate materials meets relevant standards and the manufacturer's instructions. Inspect background and substrate materials for any conditions unsuitable for tiling over. Do not commence work until the affected area is rectified. Confirm any specific preparation required for the adhesive being used.

3.7 PREPARATION OF BACKGROUNDS

Prepare backgrounds in accordance with AS 3958.1, section 4 and in accordance with the Mapei® instructions for the selected substrate.

3.8 FALLS

Form screeds in areas where water is used in significant amounts with a deviation from plane of not more than 5mm over 3 metres. Unless otherwise specified form screeds with the following falls:

Unless stated otherwise provide minimum fall gradients to BRANZ Good Practice Guide - Tiling, clause 6.6 Falls in floors.

1 : 40 minimum	For tiled decks which also act as a roof
1 : 60 minimum	For paving over ground
1 : 50 minimum	For unenclosed shower bases (to NZBC E3/AS1, 3.3.5)
1 : 60 minimum	For enclosed shower bases
1 : 50 minimum	For shower bases for people with disabilities (to NZS 4121, 10.5.11.3 (b).)
1 : 60 minimum	For commercial kitchens or similar

3.9 WATERPROOFING WET AREAS

Areas to be waterproofed shall be in accordance with NZBC E3/AS1, AS 3740 and BRANZ Good Practice Guide -Tiling Section 7: Waterproofing interior wet areas, as shown on the drawings or stated in SELECTIONS.

3.10 SERVICES AND ACCESSORIES

Ensure that all services and accessories are in place and located to suit the tile layout, and that the substrate, background and adjoining surfaces (with the preparation called for in this section) are of the quality necessary to allow tiling of the required standard.

3.11 DO NOT START

Do not start laying tiles until concrete floors are cured, moisture content of floors is such that shrinkage is complete, thermal movement has been accommodated and the levels and surface finish will allow for tile laying of the required standard.

3.12 SUBSTRATE TEMPERATURE

Do not carry out tiling where the substrate temperature is below 5°C or above 40°C.

3.13 MOISTURE CONTENT

Ensure the floor is dry and if in doubt check for moisture content by hygrometer. Do not proceed with tiling work until readings for the whole area show 75% relative humidity or less.

Application

3.14 APPLICATION GENERALLY

Prepare backgrounds as described in AS 3958.1, Section 4. Suitably prepare backgrounds and substrates in accordance with the manufacturer's instructions to receive the bedded finish. Remove all dirt, dust, grease, oil, loose particles and any other form of contamination or deleterious material. Ensure that substrates are sound and dry.

Installation to be in accordance with AS 3958.1, Section 5, including setting out, fitting, movement joints, sealants, tile finish and joints, and grouting.

Application of primers/ sealers, undertile membranes, waterproofing, adhesives grouts and sealants to comply with MAPEI® technical data sheets and application details for specific products.

3.15 SUBSTRATE PREPARATION

Refer to 6192 FLOORING SUBSTRATE PREPARATION for preparation of substrates for laying of ceramic tiles and natural stone.

3.16 LEVELLING COMPOUNDS

Prepare for and apply levelling compounds to MAPEI® technical data sheets and application details for specific product.

3.17 PRIMERS/SEALERS

Apply primers to MAPEI® technical data sheets and application details for specific product.

3.18 WET AREA MEMBRANE WATERPROOFING

Apply wet area waterproofing systems in accordance with MAPEI® technical data sheets and requirements.

3.19 SETTING OUT

Setting out, cutting and fitting of tiles to be as described in AS 3958.1, clauses 5.4.2 and 5.4.3. Set out tiling as shown on the drawings. Confirm bond and pattern before installing. Provide even and correct falls to floor tiles where required, including falls to floor wastes. Ensure that a level finish is provided at wall lines. Where falls are not required ensure that the tiles are laid level.

3.20 TILE FINISH AND JOINTS

Provide tile finish and joints, including tolerances, as described in AS 3958.1, clause 5.4.6. Joint widths to be suited to tile and in accordance with the manufacturer's instructions.

3.21 MOVEMENT JOINTS

Install movement joints with a minimum joint width of four times the expected movement. Provide a 9 to 10mm minimum joint width for exterior joints at 3.6m maximum spacings and a 12mm minimum joint width for 4.8m maximum spacings. Increase joint width by 1.5mm for each 10°C over or below a 35°C temperature range.

Provide movement control joints:

- to coincide with control joints in the substrate / structure.
- where substrate material changes.
- where tiles are restrained by building elements.
- where flexing of the structure will occur.
- to the perimeter of tiles that abut another material.
- where tile surfaces change in plane.
- where tile type changes.
- radiating from an external corner of an L-shaped tiled area

Provide movement joints at 4.5m spacing to tiled floors exposed to direct sunlight and at 6m maximum spacing for shaded internal tiled floors (reduce these spacings by 15 to 20% for flexible organic adhesives).

Provide movement joints at 3 to 4.5m centres along the length of internal and external walls (reduce these spacings by 15 to 20% for flexible organic adhesives) and at storey heights.

KDC - Approved Building Consent Document - BC210441 - Pg 286 of 336 - 30/08/2021 - ComplyNZ

3.22 APPLY ADHESIVE

Apply and float thick or thin bed of cement based adhesive to 6mm maximum and 3mm minimum bed thickness to the tile manufacturer's requirements. Rib surface with a notched trowel, press tiles and place with 3mm grout joints and to obtain adequate coverage by adhesive on the back of each tile to AS 3958.1.

3.23 GROUTING

Apply grout to tiling in accordance with Mapei® technical data sheets and application details for specific product and as described in AS 3958.1, clause 5.7.

3.24 SEALING

Apply sealants to tiling in accordance with Mapei® technical data sheets and application details for specific product.

3.25 CLEAN TILES

Upon completion of setting and grouting, thoroughly sponge and wash the tiles to leave them completely clean and without blemish. Use Mapei Keranet to clean tiles of cementitious residue as necessary and Mapei Kerapoxy Cleaner to remove residues of epoxy grout from tile surfaces. Finally polish glazed tiles with a clean dry cloth.

Completion & Commissioning

3.26 COMPLETION MATTERS

Refer to 1270 CONSTRUCTION for completion requirements and if required commissioning requirements.

3.27 COMPLETION - TESTS & CERTIFICATION

Refer to 1270 CONSTRUCTION for general test and certification requirements at completion.

4 SELECTIONS

For further details on selections go to www.mbpltd.co.nz.
Substitutions are not permitted to the following, unless stated otherwise.

Materials

4.1 CERAMIC TILES

Manufacturer:	TBC by client
Pattern/number:	TBC by client
Colour:	TBC by client
Edging:	TBC by client

4.2 MAPEI® LEVELLING COMPOUNDS

Type:	TBC by Tiler

4.3 MAPEI® PRIMERS/SEALERS

Type:	Mapei® Primer S

4.4 MAPEI® ADHESIVES

Type:	Mapei® Ultramastic III

4.5 MAPEI® GROUT

Type:	Mapei® Keracolor FF
Additive:	TBC
Colour:	TBC by client

4.6 MAPEI® SEALANT

Type:	Mapei® Mapesil AC
Colour:	TBC by Tiler

Components

KDC - Approved Building Consent Document - BC210441 - Pg 287 of 336 - 30/08/2021 - ComplyNZ

4.7 MAPEI® - MAPEGUM WPS WATERPROOFING MEMBRANE SYSTEMS

Membrane:	Mapegum WPS
Reinforcement:	Mapetex Sel waterproof reinforcing mesh
Edges:	Mapeband PE 120
Expansion joints:	Mapeband PE 120

4.8 MAPEI® - MAPELASTIC AQUADEFENSE WATERPROOFING MEMBRANE SYSTEMS

Membrane:	Mapelastic AquaDefense
Edges:	Mapeband PE 120
Expansion joints:	Mapeband PE 120

4.9 MAPEI® - MAPELASTIC SMART WATERPROOFING MEMBRANE

Membrane:	Mapelastic Smart
Reinforcement:	Mapenet 150 waterproof reinforcing mesh
Edges:	Mapeband PE 120
Expansion joints:	Mapeband PE 120

Spares & maintenance products

4.10 SPARES & MAINTENANCE PRODUCTS

Refer to the general section 1270 CONSTRUCTION for details of how spares and maintenance products will be handled.

KDC - Approved Building Consent Document - BC210441 - Pg 288 of 336 - 30/08/2021 - ComplyNZ

6511 CARPETING

1 GENERAL

This section relates to the supply and installation of carpet laid conventionally (stretched), direct stuck or double bonded (double direct stuck).
It includes:

- carpet underlay
- woven sheet carpet

Documents

1.1 DOCUMENTS

Refer to the general section 1233 REFERENCED DOCUMENTS. The following documents are specifically referred to in this section:

NZBC C/AS2	Protection from fire
AS/NZS 2270	Plywood and blockboard for interior use
AS/NZS 2455.1	Textile floor coverings - Installation practice - General

Warranties

1.2 WARRANTY - MANUFACTURER/SUPPLIER

Provide a material manufacturer/supplier warranty:

1 year:	For materials

- Provide this warranty on the manufacturer/supplier standard form.
- Commence the warranty from the date of practical completion of the contract works.

Refer to the general section 1237 WARRANTIES for additional requirements.

1.3 WARRANTY - INSTALLER/APPLICATOR

Provide an installer/applicator warranty:

1 year:	For execution

- Provide this warranty on the installer/applicator standard form.
- Commence the warranty from the date of practical completion of the contract works.

Refer to the general section 1237 WARRANTIES for additional requirements.

Requirements

1.4 QUALIFICATIONS

Refer to 1270 CONSTRUCTION for requirements relating to qualifications.

1.5 ACCEPTABLE PRODUCT/MATERIAL SUPPLIERS

Where a product or material supplier is named in SELECTIONS, the product/material must be provided by the named supplier. Where more than one named supplier, any one of the named suppliers will be acceptable.

1.6 NO SUBSTITUTIONS

Substitutions are not permitted to any of the specified systems, components and associated products listed in this section.

2 PRODUCTS

Materials

2.1 UNDERLAY

To AS/NZS 2455.1 Soft underlay and underlays manufacturer's requirements.
Refer to SELECTIONS for product selection.

KDC - Approved Building Consent Document - BC210441 - Pg 289 of 336 - 30/08/2021 - ComplyNZ

2.2 CARPET

To AS/NZS 2455.1 Textile floor coverings.
Refer to SELECTIONS for product selection.

Components

2.3 BINDER BARS

Anodised aluminium section with fluted face.

2.4 DIVIDER STRIPS

Hardwood strips 20mm x 15mm or as specified. Refer to SELECTIONS for type and size.

2.5 EDGE GRIPPER

Timber/plywood to AS/NZS 2270 with steel grippers to carpet manufacturer's requirements, constructed of sufficient pins and nails so as to withstand a minimum stretching force of 6580N over a 1220 mm length.

Accessories

2.6 TAPE

To carpet manufacturer's requirements.

3 EXECUTION

Conditions

3.1 DELIVERY, STORAGE & HANDLING OF PRODUCTS

Refer to 1270 CONSTRUCTION for requirements relating to delivery, storage and handling of products.

Handle carpet on flat dollies using carpet cradles, with probes on fork- lifts and without sharp bending or folding. Store carpet in flat bins with a maximum height of three rows. Keep dry. Protect from damage.

3.2 PRE-INSTALLATION REQUIREMENTS

Check work previously carried out and confirm it is of the required standard for this part of the work. Ensure all fittings and fixtures around which the carpet is to be scribed are in place. Carry out such additional preparatory work as required in bringing the substrate to suitable condition.

Confirm moisture content of substrate in accordance with AS/NZS 2455.1. Appendix B Do not commence laying carpet until readings for the whole area are within acceptable levels as follows:

Moisture Content:	Timber substrate - 8 -12% for air conditioned buildings - 10 -14% for intermittently heated buildings - 12 -16% for unheated buildings
	Concrete substrate 75%RH

3.3 PROTECTION

Protect adjoining work surfaces and finishes during the carpet installation.

3.4 TAPE

Tape for binding and seaming using type and width required by the carpet manufacturer to suit the specified carpet and the standard of performance required.

3.5 LAYOUT

Plan the general layout so that:

- seams run lengthways
- traffic runs along the seam
- light from windows is not across the seam
- pile faces away from the light source.

3.6 TEMPERATURE

Acclimatise carpet to a room temperature above 15°C through the whole of the installation.

KDC - Approved Building Consent Document - BC210441 - Pg 290 of 336 - 30/08/2021 - ComplyNZ

Application - general / substrate preparation

3.7 PREPARING NEW CONCRETE FLOOR

To be level, smooth, clean, cured and dry. Remove loose material and dust.

Application - carpet laying

3.8 INSTALLATION, UNDERLAY

Installation to underlay manufacturer's requirements. Lay at right angles to the carpet direction.

3.9 INSTALLATION, CONVENTIONAL SYSTEM

Tape carpet joints, fix grippers to floor and install underlay and carpet to AS/NZS 2455.1, section 3. Stretch carpet tight in both width and length evenly without bowing, square with walls.

3.10 FIXING TRIMS

Fix binder bars, carpet to carpet bars, and trims to all junctions with other materials and to carpet edges, to the carpet manufacturer's requirements. Ensure that junctions with other materials are neatly formed, with bars and trim securely fastened to the substrate, 20mm from each end and at a maximum of 100mm centres.

Completion

4 SELECTIONS

Substitutions are not permitted to the following, unless stated otherwise.

4.1 UNDERLAY

Refer to Client and Manufacturer Specifications.

4.2 CARPET

Refer to Client and Manufacturer Specifications.

4.3 BINDER BARS

Refer to Client and Manufacturer Specifications.

4.4 DIVIDER STRIPS

Refer to Client and Manufacturer Specifications.

KDC - Approved Building Consent Document - BC210441 - Pg 291 of 336 - 30/08/2021 - ComplyNZ

6700 PAINTING GENERAL

1 GENERAL

This section relates to the general matters related to painting work

1.1 RELATED WORK

Refer to 6711 PAINTING EXTERIOR for exterior paint systems.
Refer to 6721 PAINTING INTERIOR for interior paint systems.

1.2 ABBREVIATIONS

The following abbreviations are used throughout this part of the specification:

APAS	Australian Paint Approval Scheme
MPNZA	Master Painters New Zealand Association Inc.
VOC	Volatile organic compound

Documents

1.3 DOCUMENTS

Refer to the general section 1233 REFERENCED DOCUMENTS. The following documents are specifically referred to in this section:

NZBC C/AS2	Protection from fire
AS/NZS 2311	Guide to the painting of buildings
AS/NZS 2312.1	Guide to the protection of structural steel against exterior atmospheric corrosion by the use of protective coatings - Paint Coatings
AS/NZS ISO 9001	Quality management systems - requirements
SNZ TS 3404	Durability requirements for steel structures and components
WorkSafe NZ	Guidelines for the provision of facilities and general safety in the construction industry
WorkSafe NZ	Guidelines for the management of lead-based paint
MPNZA	Specification manual
MPNZA	Health and Safety Programme

Health and Safety at Work Act 2015

Requirements

1.4 NO SUBSTITUTIONS

Substitutions are not permitted to any specified manufacturer's system, or associated components and products.

1.5 QUALIFICATIONS

Painters to be a member of MPNZA and experienced competent workers, familiar with the materials and the techniques specified.

1.6 HEALTH AND SAFETY

Refer to the requirements of the Health and Safety at Work Act 2015 and WorkSafe NZ: Guidelines for the provision of facilities and general safety in the construction industry. If the elimination or isolation of potential hazards is not possible then minimise hazards in this work on site by using the proper equipment and techniques as required in the MPNZA Health and Safety Programme. Supply protective clothing and equipment. Inform employees and others on site of the hazards and put in place procedures for dealing with emergencies.

Refer to WorkSafe NZ: Guidelines for the management of lead-based paint for the required procedures and precautions when:

- treating/removing lead-based paint
- burning off paint
- sanding off paint
- using solvent based paint removers.

KDC - Approved Building Consent Document - BC210441 - Pg 292 of 336 - 30/08/2021 - ComplyNZ

1.7 MATERIAL SAFETY DATA SHEET

Obtain from each paint manufacturer the material safety sheet for each product used. Keep sheets on site and comply with the required safety procedures.

Warranties

1.8 WARRANTY

Warrant this work under normal environmental and use conditions against failure.
2 years: Warranty period

Refer to the general section 1237WA WARRANTY AGREEMENT for the required format and details of when completed warranty must be submitted.

Performance

1.9 MANUFACTURER'S INSPECTION

Allow the paint manufacturers to inspect the work in progress and to take samples of their products from site if requested.

1.10 INSPECTION OF WORK

Inspection of the whole of the work at each of the stages scheduled may be made. Agree a programme that will facilitate such inspection, including notification when each part and stage of the work is ready for inspection.

2 PRODUCTS

Materials

2.1 PAINT TYPES

Use the manufacturer's complete system and only the products specified.

2.2 MATERIALS GENERALLY

Use only the Manufacturer's products which are guaranteed for their consistency and performance under AS/NZS ISO 9001 and APAS approval, prepared, mixed and applied as directed in the Manufacturer's specification sheets, specification manuals and product data sheets.

2.3 THINNERS AND ADDITIVES

Only use thinners or additives within the stated limits for the particular situations specified.

Accessories

2.4 FILLERS

For recommendations on; fillers, stopping, paint strippers, cleaning agents, etching solutions, mould inhibitors, rust inhibitors, knotting and other commodities used for the surface preparation, refer to the manufacturer of the specified coating.

3 EXECUTION

Conditions

3.1 EXECUTION

To conform to manufacturer's requirements and those methods, practices and techniques contained in AS/NZS 2311, the MPNZA Specification manual, and WorkSafe NZ: Guidelines for the provision of facilities and general safety in the construction industry.

3.2 PREPARE

Prepare surfaces to the coating manufacturer's requirements.

3.3 COATED SURFACES

Ensure that substrate surfaces are able to achieve the specified finish.

3.4 PRE-PRIMED SURFACES

Sand down any breakdown or damage of the primer to a sound surface and immediately re-prime.

KDC - Approved Building Consent Document - BC210441 - Pg 293 of 336 - 30/08/2021 - ComplyNZ

3.5 BRUSH DOWN

Brush down surfaces immediately before application, to remove dust, dirt and loose material.

3.6 COMPATIBILITY

Check that materials are as required by the paint manufacturers for the particular surface and conditions of exposure, and that they are compatible with each other. Use paint from the same manufacturer for each paint system. If not compatible, obtain instructions before proceeding.

3.7 TREATED SURFACES

Where surfaces have been treated with preservatives or fire retardants, check with the treatment manufacturer that coating materials are compatible with the treatment and do not inhibit its performance. If they are not compatible, obtain instructions before proceeding.

3.8 BACK PAINTING

Co-ordinate with cladding and/or lining installer as to who will do the work and timing.

Exterior
For exterior cladding and trim that require on site finishing, paint the back and exposed bottom edges at the base of the cladding (generally, bottom plate overhang and horizontal flashings) to the manufacturer's requirements, but at least to 150mm up from base. Coating to match front finish, generally apply 2 coats or 1 coat if pre-primed.
Refer to appropriate exterior paint sections SELECTION clauses for claddings to be back painted.

Interior
For lining and trim that require on site finishing and/or back painting (usually wet areas), paint the back and exposed bottom edges at the base of the lining, to the manufacturer's requirements, but at least to 150mm up from base. Coating to match front finish, generally apply 2 coats or 1 coat if pre-primed, or if no front finish seal to manufacturer's requirements.
Refer to appropriate interior paint sections SELECTION clauses for linings to be back painted.

3.9 ANCILLARY SURFACES

The coatings listed in schedules and elsewhere are of necessity simplified. Coat ancillary exposed surfaces to match similar or adjacent materials or areas, except where a fair-faced natural finish is required or items are completely prefinished. In cases of doubt obtain instructions before proceeding.

3.10 HARDWARE

Do not paint hinges or hardware that cannot be removed. If items can be removed, carefully remove hardware, fixtures and fittings before commencing work. Set aside where they cannot be damaged or misplaced and replace on completion.

3.11 PROTECTION

Use dropsheets, coverings and masking necessary to protect adjoining fixtures, fittings and spaces from paint drops, spots, spray and damage.

Preparation - unpainted linings

3.12 PREPARING FIBROUS PLASTER

Check for and remove release agents and other contaminants by washing with clean water or solvent and allow to dry. Fill cracks and surface imperfections with patching plaster and lightly sand smooth. Remove dust.

3.13 PREPARING PLASTERBOARD

Check that joints are prepared to a smooth level surface finish. Fill cracks and surface imperfections with the sheet manufacturer's required stopping compound and lightly sand smooth. Remove dust.

Preparation - painted surfaces generally

3.14 SURFACE PREPARATION

Refer to the Manufacturer's specification sheets and product data sheets. Carry out the preparatory work required by them for each of the substrates.

For interior surfaces such as paper faced plasterboard use the Manufacturer's recommended finishing compound as an aid to achieving a Level 5 finish.

KDC - Approved Building Consent Document - BC210441 - Pg 294 of 336 - 30/08/2021 - ComplyNZ

3.15 MOULD

Sterilise surface mould by washing or sponging the whole surface with a one part sodium hypochlorite household bleach to three parts clean water solution. Allow bleach to act for 30 minutes and wash off with clean water. Wash cloths and sponges regularly in clean water. Reapplication may be necessary. Treat with anti-mould solution to the treatment manufacturer's requirements.

3.16 GAP FILLING

Fill cracks, holes, indented and damaged surfaces with putty, plaster filler, wood filler, or plastic wood, as appropriate and in accordance with the paint manufacturer's requirements. Allow to dry or set before sanding back level with the surface. Prime coat or seal the timber before using putty. Wet cement or gypsum base plasters before applying filler. Use only Portland cement base types, or water-insoluble organic-based gap fillers in exterior or wet areas.

Application - before applying final coatings

3.17 OFF-SITE WORK

Carry out off-site preparation and coating under cover, in a suitable environment and with adequate lighting. Store items both before and after coating in a clean, dry area, protected from the weather and mechanical damage, properly stacked and spaced to permit air circulation and to prevent sticking of surfaces.

3.18 PRIMING JOINERY

Before priming preservative treated timber ensure that any cut surfaces have been retreated. Liberally coat end grain, allow to soak in and then recoat. Ensure LOSP. treated joinery has dried sufficiently to lose odour.

3.19 CONCEALED JOINERY SURFACES

Apply off-site coatings to all surfaces including those which will be concealed when incorporated into the building.

3.20 CONCEALED METAL SURFACES

Apply primer to suit the coating system to all metal surfaces which will be concealed when incorporated into the building.

3.21 DOORS

Prime or seal and paint all six faces of doors before hanging.

3.22 BEAD GLAZING

Before glazing apply the first two coats, or the primer and one undercoat, to rebates of stained, varnished or painted joinery and beads.

3.23 PUTTY GLAZING

Follow putty manufacturers recommendations for application, drying, and painting. Ensure that the putty is fully protected by the coating system as soon as it is sufficiently hard.

Application - generally

3.24 PAINTING GENERALLY

Comply with the paint manufacturer's requirements and any additional requirements in this specification.

3.25 MIXING

Thoroughly mix paints. Lift any settled pigment and ensure the paint is homogenous.

3.26 ENVIRONMENT

Paint exterior surfaces only in favourable weather conditions:

- warm dry days without frost or heavy dews
- avoid painting in direct sunlight any surfaces that absorb heat excessively
- as far as possible apply paint in the temperature range 15°C to 25°C
- do not paint if temperatures fall outside the range of 10°C and 35°C unless paints with the necessary temperature tolerance have been specified
- do not apply solvent borne paint if moisture is present on the surface

KDC - Approved Building Consent Document - BC210441 - Pg 295 of 336 - 30/08/2021 - ComplyNZ

3.27 SEQUENCE OF OPERATIONS

Painting work to generally follow the following sequences:

- back painting and pre-installation painting, then post-installation exposed-face painting
- complete surface preparation before commencing painting
- apply paint in the specified sequence using the specified paint
- allow full drying time between coats to the paint manufacturer's requirements
- do not expose primers, undercoats and intermediate coats beyond manufacturers stated instructions before applying the next coat
- finish broad areas before painting trim
- ensure batch numbers of tins are matched for whole areas
- internally, paint ceilings before walls and walls before joinery, trim and other items

3.28 PAINT APPLICATIONS

Select brush, roller, or pad and apply paint to the requirements of the paint manufacturer and to obtain a smooth even coating of correct thickness, uniform gloss and colour.

3.29 DRYING TIME

Before handling or applying the next coat of paint, give each coat the full drying time as required by the paint manufacturer. Ensure that surfaces are dry and that condensation does not occur before the paint reaches surface-dry condition.

3.30 LIGHTLY SAND

Lightly sand primers, sealers, undercoats and intermediate coats to remove dust pick-up, protruding fibres and coarse particles. Remove dust immediately before applying the next coat.

3.31 DEFECTIVE WORK

Correct defective work immediately and re-coat as required, following precisely the paint system specified.

3.32 EACH COAT

Each coat of paint and the completed paint system to have the following qualities and properties:

- uniform finish, colour, texture, sheen and hiding power
- the specified number of coats applied
- no blemishes such as runs, sags, crinkling, fat edges, entrained paint skins, hairs, dust, bare or starved patches, cracks, brush marks, ladder marks and blistering
- proper covering of corners, crannies, thin edges, cracks, end grain and other difficult places of application

Completion

3.33 CLEAN

Clean adjoining surfaces, glass and fittings of any paint contamination. Clean off glass indicators at completion of the building works. Clean glass inside and out to a shining finish.

3.34 CLEAN EQUIPMENT

Use the Manufacturer's environmental wash system for the cleaning of water-based paint and plasters from brushes, rollers, plastering or spray equipment to separate the solids from the water component for safe disposal.

3.35 LEAVE

Leave the whole of this work uniform in gloss and colour, of correct thickness, free from painting defects, clean and unmarked and to the standard required by following procedures.

3.36 REMOVE

Remove dropsheets, coverings and masking to leave surrounding surfaces and areas clean, tidy and undamaged. Remove debris, unused materials and elements from the site.

3.37 REPLACE HARDWARE

Replace hardware without damage to it or the adjoining surface. Leave properly fitted and in working order.

4 SELECTIONS

4.1 SELECTIONS

Refer to 6711 PAINTING EXTERIOR and 6721 PAINTING INTERIOR for selections.

KDC - Approved Building Consent Document - BC210441 - Pg 296 of 336 - 30/08/2021 - ComplyNZ

6711 PAINTING EXTERIOR

1 GENERAL

This section relates to the preparation of exterior unpainted and pre-painted surfaces, and the application of exterior:

- decorative paint coatings
- protective paint coatings
- sealers
- stains
- clear finishes

Related work

1.1 RELATED SECTIONS

Refer to 6700 PAINTING GENERAL for general painting matters.
Refer to 6721 PAINTING INTERIOR for interior paint systems.

Documents

Warranties

1.2 WARRANTY

Warrant this work under normal environmental and use conditions against failure.
2 years: Warranty period

Refer to the general section for the required form of 1237WA WARRANTY AGREEMENT and details of when completed warranty must be submitted.

2 PRODUCTS

2.1 PRODUCTS

Refer to 6700 PAINTING GENERAL for product clauses.

3 EXECUTION

3.1 EXECUTION

Refer to 6700 PAINTING GENERAL for execution clauses.

4 SELECTIONS

4.1 BACK PAINTING SCHEDULE

Refer to Client and Manufacturer Specifications.

Paint systems

4.2 TIMBER / PLYWOOD - STAIN / CLEAR FINISH

Refer to Client and Manufacturer Specifications.

4.3 CONCRETE / BLOCKWORK / FIBRE CEMENT / CEMENT PLASTER

Refer to Client and Manufacturer Specifications.

KDC - Approved Building Consent Document - BC210441 - Pg 297 of 336 - 30/08/2021 - ComplyNZ

6721 PAINTING INTERIOR

1 GENERAL

This section relates to the preparation of interior unpainted and pre-painted surfaces, and the application of interior:

- decorative paint coatings
- protective paint coatings
- sealers
- stains
- clear finishes

Related work

1.1 RELATED SECTIONS

Refer to 6700 PAINTING GENERAL for general painting matters.
Refer to 6711 PAINTING EXTERIOR for exterior paint systems.

Warranties

1.2 WARRANTY

Warrant this work under normal environmental and use conditions against failure.
2 years: Warranty period

Refer to the general section for the required form of 1237WA WARRANTY AGREEMENT and details of when completed warranty must be submitted.

2 PRODUCTS

2.1 PRODUCTS

Refer to 6700 PAINTING GENERAL for product clauses.

3 EXECUTION

3.1 EXECUTION

Refer to 6700 PAINTING GENERAL for execution clauses.

4 SELECTIONS

4.1 BACK PAINTING SCHEDULE

Refer to Client and Manufacturer Specifications.

Paint systems

4.2 PLASTERBOARD

Refer to Client and Manufacturer Specifications.

4.3 PLASTERBOARD - WET AREA

Refer to Client and Manufacturer Specifications.

KDC - Approved Building Consent Document - BC210441 - Pg 298 of 336 - 30/08/2021 - ComplyNZ

7112 WATER STORAGE TANKS

1 GENERAL

This section relates to the installation of water storage tanks for potable or non-potable water.

1.1 RELATED SECTIONS

Refer to 7430 DRAINAGE for general requirements
Refer to 7411 RAINWATER SPOUTING SYSTEMS for downpipe installation
Refer to electrical section/s for electrical connections

Documents

1.2 DOCUMENTS

Refer to the general section 1233 REFERENCED DOCUMENTS. The following documents are specifically referred to in this section:

NZBC B1/AS1	Structure
NZBC E1/AS2	Surface water
NZBC G1/AS1	Personal hygiene
NZBC G2/AS1	Laundering
NZBC G3/AS1	Food preparation and prevention of contamination
NZBC G12/AS1	Water Supplies
NZBC G13/AS1	Foul water
NZBC G13/AS3	Foul water
AS/NZS 1260	PVC-U pipes and fittings for drain, waste and vent application
AS/NZS 1546.1	On-site domestic wastewater treatment units - septic tanks
AS 2070	Plastic materials for food contact use
AS/NZS 2845.1	Water supply - Mechanical backflow prevention devices - materials, design and performance requirements
AS/NZS 3000	Electrical installations (Known as the Australian/New Zealand Wiring Rules)
AS/NZS 3500.1	Plumbing and drainage - water services
AS/NZS 3500.2	Plumbing and drainage - sanitary plumbing and drainage
AS/NZS 3500.3	Plumbing and drainage - stormwater drainage
AS/NZS 4020	Testing of products for use in contact with drinking water
AS/NZS 4130	Polyethylene (PE) pipes for pressure applications
AS/NZS 4671	Steel for the reinforcement of concrete
AS/NZS 4766	Polyethylene storage tanks for water and chemicals
NZS 3104	Specification for concrete production
NZS 3106	Design of concrete structures for the storage of liquids. - SPONSORED
NZS 3109	Concrete construction
NZS 7601	Specification for polyethylene pipe (Type 3) for cold water services
NZS 7602	Specification for polyethylene pipe (Type 5) for cold water services
NZS 7610	Specification for blue polyethylene pipes up to nominal size 63 for below ground use for potable water
HB 230	MPMSAA Rainwater Tank Design and Installation Handbook (Standards Australia)
HE4602	Household water supplies: The selection, operation, and maintenance of individual household water supplies
HE10148	Water collection tanks and safe household water (Ministry of Health)
SNZ PAS 4509	New Zealand Fire Service Firefighting Water Supplies Code of Practice
Ministry of Health	Guidelines for drinking-water quality management for New Zealand

Electricity (Safety) Regulations 2010 (Reprint as at 21 January 2019).

Documents listed above and cited in the clauses that follow are part of this specification. However, this specification takes precedence in the event of it being at variance with the cited document.

KDC - Approved Building Consent Document - BC210441 - Pg 299 of 336 - 30/08/2021 - ComplyNZ

1.3 MANUFACTURER'S DOCUMENTS

Manufacturer's and supplier's documents relating to work in this section are:
Devan Installation & Maintenance Guide

Web:	www.devan.co.nz
Email:	info@devan.co.nz
Telephone:	0800 466 203
Facsimile:	+64-7 577 0437

Requirements

1.4 HEALTH REQUIREMENTS

Refer to HE4602 for guidance.

1.5 QUALIFICATIONS GENERALLY

Refer to 1270 CONSTRUCTION for requirements relating to qualifications.

Performance

1.6 DESIGN AND INSTALLATION

To HB 230 Rainwater Tank Design and Installation Handbook, to AS/NZS 3500.1, AS/NZS 3500.3 (as modified by NZBC E1/AS2) and to NZBC G1/AS1 and NZBC G12/AS1.

1.7 TESTING OF PRODUCTS

Materials used in the manufacture of rainwater tanks to be tested to AS/NZS 4020.

2 PRODUCTS

Components

2.1 ABOVE GROUND WATER STORAGE TANK

Tank generally to NZBC G12/AS1, AS/NZS 3500.1, section 2 and 8, AS/NZS 4020 and:

- Above ground tank manufactured from polyethylene to AS/NZS 4766 and to AS 2070.
- Above ground tank manufactured from precast concrete to NZS 3104, NZS 3106, NZS 3109 and AS/NZS 4671.
- Above ground tank manufactured from precast ferro-cement or reinforced plaster to AS/NZS 1516 and AS/NZS 4671.
- Above ground tank manufactured from hot dip galvanized corrugated steel sheet to AS 1445. Internal surface coated with food-grade polymer film.

Tanks to be fitted with a secure fitting lid to provide internal access for cleaning or inspection.

Accessories

2.2 TANK FITTINGS

Fittings kit supplied with the tank for complete installation.

2.3 PVC-U PIPES AND FITTINGS

Unplasticised PVC pipe and fittings to AS/NZS 1260.

2.4 POLYETHYLENE PIPES AND FITTINGS

High density polyethylene pipe and fittings to AS/NZS 4130.

2.5 WATER PRESSURE PUMP

Pump designed to pressurise water supply from tank into the building.

2.6 TANK VENT

Vent with insect proof stainless steel mesh fitted on top of the tank.

2.7 FIRST FLUSH WATER DIVERTER

Wall mounted or underground system specific to installation. To prevent the first flow of water from the roof entering the water storage tank.

KDC - Approved Building Consent Document - BC210441 - Pg 300 of 336 - 30/08/2021 - ComplyNZ

2.8 FILTER SYSTEM

Inline cartridge filter housing fitted between the first flush diverter and the inlet, or a 955 micron filter tank screen system fitted within the tank.

2.9 TANK VACUUM SYSTEM

Designed to suck from the bottom of the tank when the tank is full to overflowing. System to include anti siphon device.

2.10 WATER TREATMENT (UV)

Combination filtration and UV disinfection system.

2.11 SEALS

Uniseals for pipe connections to the top of the tank.

3 EXECUTION

Conditions

3.1 SITE ACCESS

Transportation on site to the position of the tank is at the risk and responsibility of the contractor. Make provision for manoeuvring and unloading of tank.

Installation - site

3.2 SITE EXCAVATION FOR ABOVE GROUND TANK

Select level site, free of sharp protrusions. Form solid pad with a bed of sand or concrete, screeded level to a minimum depth of 50mm. Extend pad minimum 500mm past base of tank. On a sloping site excavate fully into bank and provide minimum 600mm clearance from the tank to the base of the cut. Do not place tank on any fill, over in ground pipes, cables or underground structures.

3.3 INSTALL ABOVE GROUND TANK

Position tank on the prepared compacted level base or level platform. Fit seismic restraint straps as directed by structural engineer.

3.4 LAYING AND JOINTING

Lay in straight lines between changes of line or grade from the lower end of the drain with sockets pointing uphill. Set each pipe true to line and grade and each joint completed before the next pipe is laid.

Installation - fittings

3.5 WATER PUMP INSTALLATION

Install pump on a solid base bolted down through base plate. Place weather tight housing over the pump and secure to base. Connect to water supply and power supply.

3.6 WATER TREATMENT SYSTEM INSTALLATION

Install ultraviolet light radiation treatment unit between pump and house to manufacturer's specifications. Connect to power supply provided.

3.7 BACK FLOW PREVENTION DEVICES

Install to AS/NZS 2845.1, to AS/NZS 3500.1 and to NZBC G12/AS1.

Installation - connections

3.8 FIRST FLUSH WATER DIVERTER

Install either adjacent to the tank or underground, first flush water diverter. Connect downpipes from the roof gutter to the first flush water diverter. Connect the first flush diverter to the top of the tank. Refer to manufacturer's installation details.

3.9 FILTER INSTALLATION

Install proprietary in-line filter before the inlet connection.

KDC - Approved Building Consent Document - BC210441 - Pg 301 of 336 - 30/08/2021 - ComplyNZ

3.10 INLET CONNECTION

Install inlet pipe into top of tank at manufacturer's designated mounting area using a Uniseal type connection.

3.11 OUTLET CONNECTION

Install pipe to manufacturer's installation details. To the outlet connect a floating arm draw-off to deliver water from 100mm below the surface. From the base connection run a flexible hose to the pump. Install ball valve in line between base connection and water pump. Support all pipework at outlet.

3.12 OVERFLOW PIPE

Install pipe to manufacturer's installation details and connect to approved discharge point or as detailed.

3.13 PIPE SEALS

Insert Uniseals in clean cut holes of the correct size. Insert Uniseal into hole with widespread facing the pipe to be inserted. Lubricate the pipe with detergent and push through the Uniseal. Use only on top of tank connections.

3.14 ELECTRICAL CONNECTION

Installation to Electricity (Safety) Regulations 2010, and AS/NZS 3000. Allow to connect up water pump and water treatment unit to the power supply as provided.

Completion & commissioning

3.15 POST INSTALLATION TESTING

Test and commission the completed system to manufacturer requirements and AS/NZS 3500.1, section 16.5 Testing and Commissioning a Rainwater System . At the completion and testing of the water service, check all valves and other components to confirm their correct performance.

4 SELECTIONS

Substitutions are not permitted to the following, unless stated otherwise.

4.1 RAINWATER STORAGE TANK

Manufacturer:	Devan
Tank material:	Medium density polyethylene
Capacity:	25,000 litres

KDC - Approved Building Consent Document - BC210441 - Pg 302 of 336 - 30/08/2021 - ComplyNZ

7120 HOT & COLD WATER SYSTEM

1 GENERAL

This section relates to piped potable water supply systems from the network utility supply authority water main to designated points and appliances, the installation of hot water heating appliances, distributing piped hot water to other appliances, and the installation of valves.

KDC - Approved Building Consent Document - BC210441 - Pg 303 of 336 - 30/08/2021 - ComplyNZ

1.1 RELATED WORK

Refer to 7151 SANITARY FIXTURES, TAPWARE & ACCESSORIES for sanitary fixtures and tapware selections.

Documents

1.2 DOCUMENTS

Refer to the general section 1233 REFERENCED DOCUMENTS. The following documents are specifically referred to in this section:

NZBC B2/AS1	Durability
NZBC C/AS1-AS2	Protection from fire
NZBC G4/AS1	Ventilation
NZBC G12/VM1	Water supplies
NZBC G12/AS1	Water supplies
NZBC H1/AS1	Energy Efficiency
AS/NZS 2492	Cross Linked Polyethylene (PE-X) pipe for pressure applications
AS/NZS 2537.2	Mechanical joining fittings for use with crosslinked Polyethylene (PE-X) for pressure applications - Plastics piping systems for hot and cold water installations - Crosslinked Polyethylene (PE-X) - Fittings
AS/NZS 2642.1	Polybutylene pipe systems - Polybutylene (PB) pipe extrusion compounds
AS/NZS 2642.2	Polybutylene pipe systems - Polybutylene (PB) pipe for hot and cold water applications
AS/NZS 2642.3	Polybutylene pipe systems - Mechanical jointing fittings for use with polybutylene (PB) pipes for hot and cold water applications
AS/NZS 2845.1	Water supply - Backflow prevention devices - Materials, design and performance requirements
AS 2845.3	Water supply - Backflow prevention devices - Field testing and maintenance
AS/NZS 3500.1	Plumbing and drainage - Water services
AS/NZS 3500.4	Plumbing and drainage - Heated water services
NZS 3501	Specification for copper tubes for water, gas and sanitation
AS/NZS 4130	Polyethylene (PE) pipes for pressure applications
NZS 4305	Energy efficiency domestic type hot water systems
NZS 4602	Low pressure copper thermal storage electric water heaters
NZS 4607	Installation of thermal storage electric water heaters: valve-vented systems
NZS 4617	Tempering (3-port mixing) valves
AS/NZS 5601.1	Gas installations - general installations
DIN 8077	Polypropylene (PP) Pipes - PP-H, PP-B, PP-R, PP-RCT - Dimensions
DIN 8078	Polypropylene (PP) Pipes - PP-H, PP-B, PP-R, PP-RCT - General quality requirements and testing.

Gas (Safety and Measurement) Regulations 2010
Plumbers, Gasfitters and Drainlayers Act 2006
NZ Backflow Testing Standard: NZ Backflow Testing Standard 2011, Field testing of backflow prevention devices and verification of air gaps

Warranties

1.3 WARRANTY

Provide warranty for:
2 years: For the supply and installation of the plumbing system and fixtures

- Provide the warranty in the standard form in the general section 1237WA WARRANTY AGREEMENT.
- Commence the warranty from the date of practical completion of the contract works.

KDC - Approved Building Consent Document - BC210441 - Pg 304 of 336 - 30/08/2021 - ComplyNZ

Requirements

1.4 QUALIFICATIONS

Plumbers to be experienced competent workers, familiar with the materials and the techniques specified. Carry out all work under the direct supervision of a certifying plumber under the Plumbers, Gasfitters and Drainlayers Act 2006.

1.5 HOT WATER TEMPERATURES

To NZBC G12/AS1, 6.14

Storage water heaters to store water at not less than 60ºC.

Hot water piping system, with temperature controls where necessary (tempering valve etc), to provide water at the outlet at the following temperatures:

For personal hygiene fixtures (showers, baths, wash hand basins etc) temperatures to be close to but not to exceed:

- 45ºC - for early child hood centres, schools, elderly facilities, hospitals, psychiatric or disabled institutions.
- 55ºC - for personal hygiene fixtures in all other buildings.

For non-personal hygiene fixtures (kitchen sinks and equipment, laundry tubs, cleaners sinks, industrial fixtures etc) temperatures are:

- Unrestricted - direct from water heater, approx. 60°C, must be less than 65°C (for kitchen sinks and equipment, laundry tubs, cleaners sinks etc) - in all buildings.
- Unrestricted - direct from water heater not tempered (for industrial fixtures and specific items etc) - in all buildings.

This clause excludes boiling units.

Performance

1.6 TESTING - TO NZBC G12/AS1

Test to NZBC G12/AS1, 7.5, **Watertightness**, for hot and cold water.

- Test to a pressure of1500 kpa for period not less than 15 minutes.

Confirm the timing before carrying out any tests. Supply potable water and the apparatus needed. Slowly fill service pipes with water to exclude air. Test and ensure there is no measurable loss of pressure for the minimum period. Slowly fill distribution pipes with water to exclude air. Ensure that with draw-off taps closed the system must remain water-tight.

1.7 GAS CERTIFICATE OF COMPLIANCE

Provide a Certificate of Compliance (CoC) as required by the Gas (Safety and Measurement) Regulations 2010 to the owner, and when required provide a copy to the energy supplier before connection.

1.8 GAS SAFETY CERTIFICATION

Provide a Gas Safety Certificate (GSC) as required by the Gas (Safety and Measurement) Regulations 2010 and provide a copy to the owner and when required the BCA. To be provided at completion of the work, prior to Practical Completion.

1.9 GAS APPLIANCE COMPLIANCE

Supplier to provide a Supplier Declaration of Compliance (SDoC) in accordance with the requirements of the Gas (Safety and Measurement) Regulations 2010.

2 PRODUCTS

Materials

2.1 COPPER PIPE

To NZS 3501 complete with copper-alloy compression fittings or crox type joints and seal ring compression joints complete with fittings and accessories brand matched to the pipe manufacturer's requirements with durability to NZBC B2/AS1, Table 1 and NZBC G12/AS1, Table 1.

2.2 POLYETHYLENE PIPE

To AS/NZS 4130 Series 1 complete with fittings and accessories brand matched to the pipe manufacturer's requirements with durability to NZBC B2/AS1, table 1 and NZBC G12/AS1, table1. Except for solid black PE, protect from sunlight.

2.3 WATER METER

To the requirements of the network utility operator.

2.4 VALVES

Pressure reducing or limiting valve, filter, non-return valve, cold water expansion valve, pressure relief or temperature valve, pressure relief valve and isolating valves to NZBC G12/AS1.

2.5 TEMPERING VALVE

Tempering valve to NZS 4617 to NZBC G12/AS1.

Materials - Hot water heating appliances

2.6 ELECTRIC HOT WATER CYLINDER, MAINS PRESSURE

To NZS 4305, ceramic-coated steel thermal storage cylinder, insulated and complete with required fittings.

Components

2.7 INSULATION

Pre-formed pipe sections complete with bends and fittings, with fixing tape to the manufacturer's requirements and to NZBC H1/AS1.

2.8 PROTECTIVE TAPE

Plasticised PVC tape system with primer, mastic fixing and outer coating.

3 EXECUTION

3.1 EXECUTION GENERALLY

Generally carry out the whole of this work and tests to NZBC G12/VM1 or NZBC G12/AS1.

3.2 HANDLE AND STORE

Handle and store pipes, fittings and accessories to avoid damage. Store on site, under cover on a clean level area, stacked to eliminate movement and away from work in progress.

Store tapware in a shelved, dry and securely locked area. Retain tapware in the manufacturer's original packaging, complete with all fixings and installation instructions. Label each unit separately with its space/fixture number to match.

3.3 CORE HOLES AND SLEEVES

Review location and fit core holes and sleeves as needed throughout the structure in conjunction with the boxing, reinforcing and placing of concrete. Strip core holes and make good after installation of pipework.

3.4 CONCEAL

Conceal pipework within the fabric of the building unless detailed otherwise. Satin finish chrome plate exposed work, complete with matching ferrule at the surface penetration.

3.5 CORROSION

Separate all metals subject to electrolytic action from each other and from treated timber, concrete and other lime substances by space, painting of surfaces, taping, or separator strips.

KDC - Approved Building Consent Document - BC210441 - Pg 305 of 336 - 30/08/2021 - ComplyNZ

3.6 THERMAL MOVEMENT

Accommodate movement in pipes resulting from temperature change by the layout of the pipe runs, by expansion joints and by sleeving through penetrations.

3.7 PIPE SIZE

Flow rates to each outlet to be no less than those given in NZBC G12/VM1 or NZBC G12/AS1, table 3, Acceptable flow rates to sanitary fixtures. Pipe size as determined in NZBC G12/AS1, table 4, Tempering valve and nominal pipe diameters.

KDC - Approved Building Consent Document - BC210441 - Pg 306 of 336 - 30/08/2021 - ComplyNZ

3.8 ELECTROLYTIC ACTION

Avoid electrolytic action by eliminating contact or continuity of water between dissimilar metals.

3.9 EXCAVATE

Excavate for the water main to a firm, even trench base in straight runs. Allow to backfill.

Application - Jointing

3.10 JOINTING COPPER PIPE

Braze pipe, fit alloy compression fittings, crox type joints and seal ring compression joints to NZBC G12/AS1.

3.11 JOINTING POLYETHYLENE PIPE

Seal ring compression joints and electrofusion to NZBC G12/AS1.

Application - Pipework installation

3.12 WATER SUPPLY CONNECTION

Arrange with the network utility operator for a connection to the water main and from there through a water meter and gate valve. Provide back flow prevention to NZBC G12/AS1.

3.13 POTABLE WATER SUPPLY PIPEWORK INSTALLATION

From connection point, run pipes complete with all fittings, support and fixing, joins and install to manufacturers specifications. Size the pipes and branches in straight runs to deliver the acceptable flow rate to NZBC G12/VM1 or NZBC G12/AS1, table 3, Acceptable flow rates to sanitary fixtures at each outlet. Allow for the expected concurrent use of adjoining fixtures and size the piping layout to eliminate loss of pressure at any point by simultaneous draw-off. Pipework support spacing to be firmly fixed and buffered to eliminate noise and hammer, with preformed tee-connection take-offs and branches, with machine made 3 diameter bends, complete with necessary valves and fittings. Conceal pipework and pressure test before the wall linings are fixed.

3.14 HOT WATER PIPEWORK

Use a take-off spigot to give separate branches to each fitting, lay out pipes with support spacing to NZBC G12/VM1 or NZBC G12/AS1, table 7 Water supply pipework support spacing. Fix firmly and buffer to eliminate noise and hammer, with preformed tee-connection take-offs and branches, and preformed 3 diameter bends, complete with all necessary valves and fittings

Lag all pipes with rigid insulation to the manufacturer's requirements and G12/VM1 or G12/AS1.

3.15 EQUIPOTENTIAL BONDING METALLIC WATER SUPPLY PIPES

If it is an electrical requirement, before enclosing, ensure metallic water supply pipes and metallic sanitary fixtures are equipotential bonded (or at least conductor cable attached) to NZBC G12/AS1, 9.0.

3.16 IN-LINE FILTER

Install an in-line filter immediately adjacent to the main isolating valve at the point of entry to the building, in an accessible position to allow for easy cleaning.

Application - Hot water systems

3.17 SEISMIC RESTRAINTS - NON-GAS WATER HEATING APPLIANCES

Non-gas (electric, wet-back, solar etc) water heating appliances (storage water heaters) to be restrained to manufacturer's requirements and NZBC G12/AS1, 6.11, Water Heater Installation.

3.18 INSTALLING HOT WATER PIPE INSULATION

Insulate all hot water pipes to NZBC H1/AS1 Energy Efficiency, AS/NZS 3500.4, section 8.2 Thermal insulation, and to the insulation manufacturer's instructions. Cut insulation sections tight between timber framing and tight between the webs of steel studs.

3.19 INSTALL ELECTRIC HOT WATER CYLINDERS AND BOILING CYLINDERS

Install where shown complete with all the necessary fittings to the cylinder manufacturer's requirements and in accordance with NZBC G12/AS1: 6.11. Valve-vented systems to NZS 4607.

3.20 INSTALL STORAGE HOT WATER CYLINDER OVERFLOW TRAY

Install drained overflow tray to storage hot water cylinder to NZBC G12/AS1.

3.21 INSTALL TEMPERING VALVE

Install 1 metre minimum from outlet of hot water cylinder and to manufacturer's instructions. Install copper pipework for 1 metre minimum downstream of tempering valve prior to connection of non-metallic pipework.

3.22 PENETRATIONS

Provide and fit collars and escutcheon plates to match the pipework at all penetrations through constructions.

3.23 INSTALLING BELOW GROUND ISOLATING VALVE

Install all below ground items such as main isolating valves and water meters in preformed concrete pits or approved equivalent.

3.24 INSTALLING APPLIANCE ISOLATING VALVES - CONCEALED

Install isolating valves for appliances in accessible positions. Locate in adjacent cupboards and position to allow for easy connection and operation.

Completion

3.25 LABEL

Label all pipework with permanent adhesive markers at 3 metre minimum intervals.

3.26 CLEAN IN-LINE FILTER

Clean all in-line filters on completion of works.

3.27 REPLACE

Replace damaged or marked elements.

3.28 LEAVE

Leave work to the standard required by following procedures.

3.29 REMOVE

Remove debris, unused materials and elements from the site.

4 SELECTIONS

Water main

4.1 POLYETHYLENE WATER MAIN

Size:	25mm outside diameter (i.e. DN 25 in AS/NZS 4130)

Pipework

4.2 COPPER PIPE

Manufacturer:	Refer to Client and Manufacturer Specifications.
Brand:	Refer to Client and Manufacturer Specifications.

4.3 EXPOSED PIPES

Manufacturer:	Refer to Client and Manufacturer Specifications.
Type:	Refer to Client and Manufacturer Specifications.

KDC - Approved Building Consent Document - BC210441 - Pg 307 of 336 - 30/08/2021 - ComplyNZ

Hot water systems

4.4 ELECTRIC HOT WATER CYLINDER, MAINS PRESSURE

Brand: Rheem
Model size: 180L

KDC - Approved Building Consent Document - BC210441 - Pg 308 of 336 - 30/08/2021 - ComplyNZ

7151 SANITARY FIXTURES, TAPWARE & ACCESSORIES

1 GENERAL

This section relates to the supply and installation of sanitary fixtures, tapware and sanitary accessories.

1.1 RELATED WORK

Refer to 7120 or 7123 HOT AND COLD WATER SYSTEM for hot water cylinders.
Refer to 7420 or 7421 SANITARY SYSTEMS for the supply and fitting of waste disposal pipework
Refer to the electrical section/s for electrical connection of accessories.

Documents

1.2 DOCUMENTS

Refer to the general section 1233 REFERENCED DOCUMENTS. The following documents are specifically referred to in this section:

NZBC E3/AS1	Internal moisture
NZBC F2/AS1	Hazardous building materials
NZBC G1/AS1	Personal hygiene
NZBC G12/VM1	Water supplies
NZBC G12/AS1	Water supplies
NZBC G13/AS1	Foul water
NZBC G13/AS3	Plumbing and drainage
AS/NZS 1730	Washbasins
AS/NZS 2023	Baths for ablutionary purposes
AS/NZS 3500.1	Plumbing and drainage - water services
AS/NZS 3500.2	Plumbing and drainage - sanitary plumbing and drainage
AS/NZS 3662	Performance of showers for bathing
NZS 4223.3	Glazing in buildings - Human impact safety requirements
Plumbers, Gasfitters and Drainlayers Act 2006	

Documents listed above and cited in the clauses that follow are part of this specification. However, this specification takes precedence in the event of it being at variance with the cited document.

Requirements

1.3 QUALIFICATIONS

Plumbers to be experienced competent workers, familiar with the materials and the techniques specified. Carry out all work under the direct supervision of a Certifying Plumber under the Plumbers, Gasfitters and Drainlayers Act 2006.

1.4 SUPPLIER

A specialist in the supply of tapware, and employing experienced architectural representatives available to assist during the course of the installation.

2 PRODUCTS

2.1 SANITARY FIXTURES

Refer to SELECTIONS for product selection.

2.2 TAPWARE

Refer to SELECTIONS for product selection.

2.3 SANITARY APPLIANCES

Refer to SELECTIONS for product selection.

2.4 SANITARY ACCESSORIES

Refer to SELECTIONS for product selection.

KDC - Approved Building Consent Document - BC210441 - Pg 309 of 336 - 30/08/2021 - ComplyNZ

2.5 ELECTRICAL SANITARY ACCESSORIES

Refer to SELECTIONS for product selection.

3 EXECUTION

Conditions - sanitary fixtures

3.1 DELIVERY

Only deliver to the site fixtures or fittings that can be immediately unloaded into suitable storage or be placed for direct installation.

3.2 STORAGE AND HANDLING

Take delivery of and store components complete with protective casings and coverings in areas that are enclosed, clean and dry and where no work is being done. Remove protection only to the extent that will allow installation.

3.3 QUALITY STANDARDS INCLUDING AS/NZS 3500.2

Installation work to comply with NZBC G1/AS1, NZBC G12/VM1, NZBC G12/AS1, AS/NZS 3500.2, as modified by NZBC G13/AS3, and the fixture manufacturer's requirements.

3.4 SUBSTRATE

Ensure substrate and fixings will allow work of the specified standard.

3.5 CO-ORDINATION

Do not proceed if the points of supply and drainage services do not match the points of the fixtures without force or distortion.

3.6 INSTALLATION REQUIREMENTS INCLUDING AS/NZS 3500.2

Install to NZBC G1/AS1, NZBC G12/VM1, NZBC G12/AS1, NZBC E3/AS1, AS/NZS 3500.2, as modified by NZBC G13/AS3, and to the fixture manufacturer's installation requirements for each component. Carry out preparatory and assembly work, including connections to supply and drainage services and the application of slurries and sealants in sequence.
Seal between all sanitary fixtures and floors, wall linings, fixtures and the tops they are in, the tops and wall linings, to NZBC E3/AS1, 3.2. Fixtures include toilets, urinals, baths, basins, tubs or sinks. Tops include, vanities, bath surrounds, sink benches, etc, and there upstands.

3.7 PROVIDE SUPPORT

Confirm fixing points needed for each unit and provide solid blocking at each fixing bracket location.

Conditions - tapware

3.8 RETAIN

Retain tapware in the manufacturer's original packaging and ensure that units are complete with fixings and installation instructions. Label each unit separately with its fitting name and space number.

3.9 STORE

Store tapware packages in a shelved, dry and securely locked area. Provide supervision when the secure area is unlocked and packages and cartons are being distributed; signing off each package from the schedule as released.

Conditions - sanitary accessories

3.10 RETAIN

Retain fixtures, fittings and hardware in the manufacturer's original packaging and ensure that units are complete with associated fixings and installation instructions. Label each unit separately to match the submitted and approved schedule.

3.11 PACKAGE

Package fixtures, fittings and hardware units required in clear plastic and label each to match the drawings and the submitted schedule. Place packages in cartons selected for 'level', 'location', and/or 'sector' and label the packages and the cartons similarly.

KDC - Approved Building Consent Document - BC210441 - Pg 310 of 336 - 30/08/2021 - ComplyNZ

3.12 STORE

Store items in a shelved, dry and securely locked area. Provide supervision when the secure area is unlocked and packages and cartons are being distributed; signing off each package from the schedule as released.

3.13 INSPECTION

Before starting the installation of proprietary items, check relevant spaces and wall and floor finishes for any condition that would not allow the proper installation of any unit. Do not proceed until such conditions have been remedied.

KDC - Approved Building Consent Document - BC210441 - Pg 311 of 336 - 30/08/2021 - ComplyNZ

Installation - sanitary fixtures

3.14 INSTALLING TOILET PAN

Carry out preparatory and assembly work, including connections to supply and drainage services and the application of slurries/bedding and sealants in sequence. Fit the toilet pan in position, plumb, level, flush and rigid without stressing the attachment points of the component. Fixings to be corrosive resistant. Fit seat.

3.15 INSTALLING CISTERNS

Fit firmly in place and connect the specified cisterns from the supply services through the flush pipes to the relative fixtures in the positions as detailed all plumb and level.

Installation - Basins

3.16 INSTALLING WASHBASINS

Install to NZBC G1/AS1, AS/NZS 1730. Set basins firmly to walls or vanities as detailed and to comply with NZBC E3/AS1. Connect to supply and drains through trap to the drainage system.

3.17 INSTALLING VANITIES - BLANK TOP

Install in accordance with the manufacturer's requirements. Cut out basin profile to basin manufacturer's template. Make penetrations for supply and drainage. Fix securely with corrosive resistant fixings. Seal top and upstand to wall surface to comply with NZBC E3/AS1.

Installation - Showers

3.18 INSTALLING SHOWER FITTINGS

Shower waste, mixer and rose to be install to NZBC G1/AS1 and to AS/NZS 3662. Seal shower wall lining penetrations (shower head, shower hose, mixer, taps etc) to NZBC E3/AS1, Fig. 6.

3.19 INSTALLING PROPRIETARY SHOWER CUBICLE

Install to NZBC G1/AS1 and to AS/NZS 3662 and in accordance with shower manufacturer's details and requirements. Ensure that doors fit closely and accurately. Test for water egress around sides and base. Lining materials and finishes to comply with NZBC E3/AS1.

3.20 INSTALLING PROPRIETARY SHOWER ENCLOSURES AND WALL LININGS

Install in accordance with NZBC E3/AS1. Sit tray firmly in place as detailed, to levels shown and connect to drainage service, ready for following work. Fit screen and door unit to manufacturer's details. Lining materials and finishes to comply with NZBC E3/AS1.

3.21 INSTALLING SHOWER DOOR AND SCREEN

To NZS 4223.3 and to the product manufacturer's requirements. Set units level, plumb and true to line and required location, with moving parts and actions freely and easily operating.

Installation - Baths

3.22 INSTALLING BATHS

Install to NZBC G1/AS1. Set firmly in cradle with required points fully supported, level and flush. Connect to supply and drainage services.

Installation - Sinks

3.23 INSTALLING SINK BENCHES

Install in accordance with manufacturer's/supplier's requirements. Connect to supply and drainage services.

3.24 INSTALLING CLEANERS SINKS AND TUB UNITS

Install in accordance with manufacturer's requirements. Connect to supply and drainage services.

Installation - Miscellaneous

3.25 INSTALLING STAINLESS STEEL FIXTURES

Carry out preparatory work and fit elements in position plumb, level, flush and rigid without stressing the attachment points in sequence. Connect to supply and drainage services.

Application - tapware

3.26 GENERAL

To AS/NZS 3500.1 and in accordance with the manufacturer's requirements. Maintain safe water temperatures to comply with NZBC G12/AS1.

Application - sanitary accessories

3.27 INSTALLING ACCESSORIES

Fit specified fittings firmly in place at required dimensions relative to floor and adjoining sanitaryware fittings, all plumb and level.

3.28 LOCATE

Locate units at heights and/or locations shown on the drawings, or as required to comply with NZBC G1/AS1. For any dimension not shown or known, request direction before proceeding.

3.29 CUTTING AND FITTING

Where cutting and fitting of the substrate is necessary for installing any unit, carry out this work before the painting or finishing of that surface. Remove any hardware when required for painting, placing it in the packaging or carton originally supplied and returning it to the secure store until ready for re-installation.

3.30 INSTALLING UNITS

Install each unit in accordance with the proprietary fixture manufacturer's requirements, using the templates and tools supplied or recommended by them. Set units level, plumb and true to line and required location, with moving parts and actions freely and easily operating. Do not make any modifications to supplied units.

Completion

3.31 REPLACE

Replace damaged or marked elements.

3.32 PROTECTIVE COVERINGS

Leave fixtures, fittings and accessories clean and unblemished with stickers and protective coverings removed, with supply and drainage connections and all parts fully operating and working. Leave the whole of this work free of blemishes, undamaged and to the standard of finish required for following work.

3.33 REMOVE

Remove debris, unused materials and elements from the site.

4 SELECTIONS

4.1 TOILET

Refer to Client and Manufacturer Specifications.

4.2 BASIN

Refer to Client and Manufacturer Specifications.

4.3 VANITY UNIT - BLANK TOP

Refer to Client and Manufacturer Specifications.

4.4 SHOWER ENCLOSURE

Refer to Client and Manufacturer Specifications.

KDC - Approved Building Consent Document - BC210441 - Pg 312 of 336 - 30/08/2021 - ComplyNZ

4.5 SHOWER CUBICLE

Refer to Client and Manufacturer Specifications.

4.6 BATH

Refer to Client and Manufacturer Specifications.

4.7 KITCHEN SINK BOWL

Refer to Client and Manufacturer Specifications.

4.8 LAUNDRY TUB

Refer to Client and Manufacturer Specifications.

4.9 TAPWARE - MISCELLANEOUS

Refer to Client and Manufacturer Specifications.

4.10 SANITARY APPLIANCES

Refer to Client and Manufacturer Specifications.

4.11 SANITARY ACCESSORIES

Refer to Client and Manufacturer Specifications.

4.12 ELECTRICAL SANITARY ACCESSORIES

Refer to Client and Manufacturer Specifications.

KDC - Approved Building Consent Document - BC210441 - Pg 313 of 336 - 30/08/2021 - ComplyNZ

7411 RAINWATER SPOUTING SYSTEMS

1 GENERAL

This section relates to rainwater disposal systems including spouting and downpipes in:

- metal
- PVC

KDC - Approved Building Consent Document - BC210441 - Pg 314 of 336 - 30/08/2021 - ComplyNZ

1.1 RELATED WORK

Refer to 4311 Profiled Metal Roofing.
Refer to 7430 Drainage.

1.2 ABBREVIATIONS AND DEFINITIONS

Refer to the general section 1232 INTERPRETATION & DEFINITIONS for abbreviations and definitions used throughout the specification.

BMT	Base metal thickness
NZMRM	New Zealand Metal Roofing Manufacturers Inc
Spouting	Roof gutter bracketed off the roof edge or fascia.
Gutter	Internal gutter or gutter formed as integral part of the roof fabric.

Documents

1.3 DOCUMENTS

Refer to the general section 1233 REFERENCED DOCUMENTS. The following documents are specifically referred to in this section:

NZBC E1/AS1	Surface water
NZBC E1/AS2	Surface water
AS 1273	Unplasticised PVC (uPVC) downpipe and fittings for rainwater
AS/NZS 3500.3	Plumbing and drainage - Stormwater drainage
NZMRM CoP	NZ Metal Roof and Wall Cladding Code of Practice

Warranties

1.4 WARRANTY - MANUFACTURER/SUPPLIER

Warrant this work under normal environmental and use conditions:

10 Years	For failure of coating adhesion
10 Years	For weatherproofing by material penetration
Form:	Manufacturer's standard warranty form
From:	Commence the warranty from the date of completion of installation

Refer to the general section 1237 WARRANTIES for details of when completed warranty must be submitted.

1.5 WARRANTY - INSTALLER/APPLICATOR

Warrant this work under normal environmental and use conditions against:

3 years:	For weatherproofing by substandard workmanship:
From:	Commence the warranty from the date of completion of installation
Form:	Installers standard warranty form

Refer to the general section 1237 WARRANTIES for details of when completed warranty must be submitted.

Requirements

1.6 QUALIFICATIONS

Work to be carried out by trades people experienced, competent and familiar with the materials and techniques specified.

Performance

1.7 TEST

Test the completed rainwater disposal system with water to ensure spoutings are laid to correct falls, that both spouting and downpipes are unobstructed and that no ponding occurs in spoutings.

2 PRODUCTS

Materials - metal

2.1 SPOUTING

Complete with matching brackets to suit spouting and screws. Refer to SELECTIONS for type.

2.2 SPOUTING BRACKETS

All exposed brackets to be colour matched before installation. Brackets to be hot-dipped galvanised, zincalume, aluminium, stainless steel or brass as specified and to suit application. Electroplated components are not acceptable. Refer to SELECTIONS for type.

2.3 DOWNPIPES

Complete with stand-off brackets, screw fixed. Refer to SELECTIONS for type.

Components

2.4 DROPPERS

Metal or uPVC droppers, compatible with spouting material and sized to fit inside the downpipe.

2.5 FASTENERS GENERALLY

Minimum Class 4 durability and not less than the roofing material being fixed.

2.6 RIVETS

Sealed aluminium, minimum diameter 4mm.

2.7 SEALANT

MS Polymer sealant.

3 EXECUTION

Conditions

3.1 HANDLE AND STORE

Handle and store downpipes, spouting and accessories to avoid damage. Store on site under cover, on a clean level area, stacked to eliminate movement and away from work in progress. Avoid exposure to sunlight if strippable film is still on the product.

3.2 SUBSTRATE

Check that fascias, barges or cladding are level and true to line and face and will allow work of the required standard without distortion to the product alignment. Do not proceed until they are up to standard.

3.3 THERMAL MOVEMENT

Make adequate provision in the fixing and jointing of the spouting for thermal movement in the length of the spouting. Provide an expansion joint in spouting over 18 metres in length for steel gutter.

3.4 CORROSION

Separate metals subject to electrolytic action from each other and from treated timber, concrete and other lime substances by space, painting of surfaces, taping, or separator strips. Do not allow copper downpipes to discharge onto lower galvanized or zinc aluminium coated steel roofs.

Application - metal

3.5 INSTALLATION GENERALLY

Install to NZMRM CoP recommendations where not otherwise specified.

KDC - Approved Building Consent Document - BC210441 - Pg 315 of 336 - 30/08/2021 - ComplyNZ

3.6 INSTALL VALLEY GUTTERS

Attach valley gutters to valley boards by clips allowing for thermal movement to NZMRM CoP, clause 5.6, **Valley Gutters**. Separate valley gutter from valley boards with a layer of bituminous roof underlay.

3.7 INSTALL SECRET GUTTERS

Install secret gutters to fall allowing for thermal movement to NZMRM CoP, clause 5.5.7 **Secret Gutters**. Rivet and seal joints with MS Polymer sealant.

3.8 INSTALL METAL SPOUTING

Establish minimum falls necessary (minimum 1:500, 2mm in 1 metre) to outlets to prevent ponding and screw fix brackets, true to line at 750mm centres maximum for external gutters less than 175mm wide and at 600mm centres maximum for gutters 175mm to 300mm wide. In areas where snow fall is possible the centres should be reduced to 600mm maximum. Lap spouting joints a minimum of 40mm, silicone seal between surfaces and pop rivet to the manufacturer's recommendations. Ensure the joint is fixed over its full girth. Cut out neatly for and fit the pre-formed downpipe dropper and rivet and seal around the joint. All installation to NZMRM CoP recommendations.

3.9 INSTALL PRE-PAINTED METAL SPOUTING

Establish minimum falls necessary (minimum 1:500, 2mm in 1 metre) to outlets to prevent ponding and screw fix brackets true-to-line at 750mm centres maximum for external gutters less than 175mm wide and at 600mm centres maximum for gutters 175mm to 300mm wide. In areas where snow fall is possible the centres should be reduced to 600mm maximum. Lap spouting joints a minimum of 40mm and silicone seal and pop rivet to the manufacturer's recommendations. Cut out neatly for and fit the pre-formed downpipe dropper and silicone seal around the lap joint. All installation to NZMRM CoP recommendations.

3.10 INSTALL DROPPERS

Install either 2 outlets or one outlet and an overflow to each spouting section. Cut out neatly for and fit the pre-formed downpipe dropper and rivet and seal around the joint. All installation to NZMRM CoP recommendations.

3.11 INSTALL METAL DOWNPIPES

Form downpipes complete with angle bends as needed with joints lapped and sealed. Screw fix with pipe clips to rigidly stand off the wall plumb and discharging into stormwater gully or inlet pipe. All installation to NZMRM CoP recommendations.

3.12 INSTALL OUTLETS AND OVERFLOWS

Install outlets and overflows where required to NZMRM CoP, clauses 5.8.2, **Outlets and Overflows.**

Completion

3.13 REPLACE

Replace damaged or marked elements.

3.14 LEAVE

Leave the whole of this work discharging completely and freely into the stormwater system and free of all debris. Leave work to the standard required by following procedures.

3.15 REMOVE

Remove debris, unused materials and elements from the site.

4 SELECTIONS

4.1 SPOUTING

Colorsteel Endura 150mm 1/4 round.

4.2 SPOUTING BRACKETS

Refer to Client and Manufacturing Specifications.

KDC - Approved Building Consent Document - BC210441 - Pg 316 of 336 - 30/08/2021 - ComplyNZ

4.3 DOWNPIPES

Brand:	Marley
Profile/size:	RP80
Material:	uPVC
Colour:	Refer to Client Specifications.

4.4 DOWNPIPE BRACKETS

Type:	Refer to Client Specifications.
Material:	Refer to Client Specifications.

KDC - Approved Building Consent Document - BC210441 - Pg 317 of 336 - 30/08/2021 - ComplyNZ

7420 SANITARY SYSTEMS

1 GENERAL

This section relates to above ground gravity flow sanitary systems;

- for foul water
- from sanitary fixtures to first underground drain connection
- including system wastes, floor wastes, floor waste gullies, traps, vents and valves
- with associated components and accessories to make the system work

1.1 RELATED SECTIONS

Refer to 7151 SANITARY FIXTURES, TAPWARE & ACCESSORIES for sanitary fixtures tapware and accessories.
Refer to 7430 DRAINAGE for underground drains.

1.2 DOCUMENTS

Documents referred to in this section are:

NZBC G1/AS1	Personal hygiene
NZBC G13/AS1	Foul water - Sanitary plumbing
NZBC G13/AS3	Foul water - Sanitary plumbing and drainage
AS 2887	Plastic waste fittings
AS/NZS 1260	PVC-U pipes and fittings for drain, waste and vent applications
AS/NZS 2032	Installation of PVC pipe systems
AS/NZS 3500.2	Plumbing and drainage - Sanitary plumbing and drainage

Plumbers, Gasfitters and Drainlayers Act 2006

1.3 QUALIFICATIONS

Carry out all work under the direct supervision of a certifying plumber under the Plumbers, Gasfitters and Drainlayers Act 2006.

2 PRODUCTS

2.1 PVC-U WASTE, DISCHARGE AND VENT PIPES

PVC-U pipe to AS/NZS 1260 complete with fittings brand-matched to the pipe manufacturer's requirements.

2.2 EXPOSED PIPES AND TRAPS

Chrome plate on copper pipes and associated copper and brass fittings.
White polybutylene or PVC, including all associated fittings.

3 EXECUTION

3.1 EXECUTION GENERALLY - AS/NZS 3500.2

Carry out this work to AS/NZS 3500.2, as modified by NZBC G13/AS3, and complete all tests to AS/NZS 3500.2, 15 **Testing of Sanitary Plumbing and Sanitary Drainage Installations.**

3.2 ELECTROLYTIC ACTION

Avoid electrolytic action by eliminating actual contact or continuity of water between dissimilar metals.

3.3 INSTALL TRAPS, WASTE AND VENT PIPES - AS/NZS 3500.2

Connect waste outlets to traps and run waste pipes and back vents concealed, sized and fixed to AS/NZS 3500.2, as modified by NZBC G13/AS3, and jointing to AS/NZS 2032. Discharge wastes into the drainage system stack, soil pipe, or gully trap as shown. Bird proof mesh to all roof vents and vermin proof mesh to all untrapped waste pipes.

3.4 PENETRATIONS

At penetrations through constructions provide and fit collars and escutcheon plates to match pipework.

KDC - Approved Building Consent Document - BC210441 - Pg 318 of 336 - 30/08/2021 - ComplyNZ

3.5 TEST

Confirm timing before carrying out any tests. Supply potable water and apparatus needed. Test to NZBC G13/AS1 or AS/NZS 3500.2, 15 as required. Carry out and record a visual inspection that each joint showed no evidence of leaks.

3.6 CLEAN UP

Remove labels and clean fittings. Remove unused materials from the site.

4 SELECTIONS

4.1 PVC-U WASTE, DISCHARGE AND VENT PIPES

Refer to Client and Manufacturer Specifications.

4.2 EXPOSED PIPES AND TRAPS

Refer to Client and Manufacturer Specifications.

KDC - Approved Building Consent Document - BC210441 - Pg 319 of 336 - 30/08/2021 - ComplyNZ

7430 DRAINAGE

1 GENERAL

This section relates to the supply and laying of gravity foul water (sewage), stormwater and groundwater drainage.

KDC - Approved Building Consent Document - BC210441 - Pg 320 of 336 - 30/08/2021 - ComplyNZ

1.1 DOCUMENTS REFERRED TO

Documents referred to in this section are:

NZBC B1/AS1	Structure
NZBC E1/AS1	Surface water
NZBC E1/AS2	Surface water
NZBC E1/VM1	Surface water
NZBC G1/AS1	Personal hygiene
NZBC G13/AS1	Foul water - sanitary plumbing
NZBC G13/AS2	Foul water - drainage
NZBC G13/AS3	Foul water - sanitary plumbing and drainage
AS/NZS 1254	PVC-U pipes and fittings for Stormwater and Surface Water applications
AS/NZS 1260	PVC-U pipes and fittings for drain, waste and vent applications
AS/NZS 2032	Installation of PVC pipe systems
AS/NZS 2033	Installation of polyethylene pipe systems
AS 2439.1	Perforated Plastics Drainage and Effluent Pipes and Fittings - Perforated drainage pipe and associated fittings
AS/NZS 2566.1	Buried Flexible Pipelines - Structural Design
AS/NZS 2566.2	Buried Flexible Pipelines - Installation
AS/NZS 3500.3	Plumbing and drainage - Stormwater drainage
NZS 3104	Specification for concrete production
NZS 3111	Method of test for water and aggregate for concrete
AS/NZS 3500.2	Plumbing and drainage - sanitary plumbing and drainage
NZS 3604	Timber-framed buildings
NZS 4229	Concrete masonry buildings not requiring specific engineering design
NZS 4402 (set)	Method of testing soils for civil engineering purposes
AS/NZS 4671	Steel reinforcing materials
AS/NZS 5065	Polyethylene and polypropylene pipes and fittings for drainage and sewerage applications
NZCMM	NZ Concrete Masonry Manual section 6.1 Masonry Retaining Walls
NZTA F2	Specification for pipe subsoil drain construction

Plumbers, Gasfitters and Drainlayers Act 2006

1.2 AS BUILT DOCUMENTS

Supply a 1:100 scale as-built drawing of drains and fittings to the territorial authority and to the owner on completion.

1.3 QUALIFICATIONS

Drainlayers to be experienced, competent and familiar with the materials and techniques specified. Carry out all work under the direct supervision of a certifying drainlayer under the Plumbers, Gasfitters and Drainlayers Act 2006.

2 PRODUCTS

2.1 CONCRETE

17.5 MPa prescribed mix to NZS 3104.

2.2 REINFORCEMENT

Plain round and/or deformed steel bars, Grade 300 to AS/NZS 4671.

2.3 PVC-U PIPES

PVC-U pipes bends, junctions, fittings and joints to AS/NZS 1254 and AS/NZS 1260.
Underground PVC-U pipe to be classified as follows:

Classification:	Use:
SN4 - SN6	Domestic & light load areas
SN8 - SN10	Commercial & Industrial medium load areas
SN16	Public roads & high load areas

KDC - Approved Building Consent Document - BC210441 - Pg 321 of 336 - 30/08/2021 - ComplyNZ

3 EXECUTION

3.1 EXCAVATE

Excavate for drains to a firm even base with correct gradients set in straight runs.
Trenches running parallel, below and close to foundations of buildings to NZS 3604 or NZS 4229 to be separated to:

- NZBC E1/AS1, 3.9.7, **Proximity of Trench to Building**, for stormwater and subsoil drains.
- AS/NZS 3500.3, 6.2.8, **Installation near and under buildings**, as modified by NZBC E1/AS2.
- NZBC G13/AS2, 5.6, **Proximity of Trench to Building**, for foul water drains.

3.2 MANUFACTURER'S REQUIREMENTS

All drainage installations to the pipe and fitting manufacturer's requirements.

3.3 LAY STORMWATER DRAINS

Confirm the required location of downpipes and finished ground levels before commencing pipework. Set downpipe bends in concrete with the concrete brought up to protect the top of the bend from damage. Lay drains in straight runs to correct gradients to discharge into the network utility operator's stormwater system.

3.4 SOAKHOLES OR TRENCHES

Dispose of stormwater on site as shown on the drawings, by soakage, to suit local geology and soil structure; all as directed by the territorial authority.

4 SELECTIONS

4.1 PVC-U PIPES

Brand/type: Kembla KemPex Crimp

7513 CENTRAL HEATING SYSTEMS

1 GENERAL

This section relates to the supply and installation of:

- diesel boilers
- gas boilers
- electric heat pumps
- aluminium radiators
- steel panel radiators
- water heated towel rails.

Documents

1.1 DOCUMENTS

Refer to the general section 1233 REFERENCED DOCUMENTS. The following documents are specifically referred to in this section:

NZBC G10/AS1	Piped services
NZBC G11/AS1	Gas as an energy source
NZBC G12/AS1	Water supplies
BS EN442-1	Specification for radiators and convectors. Technical specifications and requirements
NZS 5262	Gas appliance safety
AS/NZS 5601.1	Gas Installations - general installations
AS/NZS 60335.2.102	Household and similar electrical appliances - Safety - Particular requirements for gas, oil and solid-fuel burning appliances having electrical connections
CoP Boilers	Approved code of practice for the design, safe operation, maintenance and servicing of boilers

Electricity (Safety) Regulations 2010 (Reprint as at 21 January 2019)
Gas (Safety and Measurement) Regulations 2010
Plumbers, Gasfitters and Drainlayers Act 2006
Documents listed above and cited in the clauses that follow are part of this specification. However, this specification takes precedence in the event of it being at variance with the cited document.

Warranties

1.2 WARRANTY

Warrant this part of the work under normal environmental and use conditions against failure of materials and execution:

Piping system:	10 years issued by the manufacturer
Boiler units and heat pumps:	3 years issued by the manufacturer
Radiators:	5 years issued by the manufacturer
Execution:	1 years issued by the manufacturer's accredited installer

Requirements

1.3 COMPLY

Comply with the Gas (Safety and Measurement) Regulations 2010, Electricity (Safety) Regulations 2010, AS/NZS 60335.2.102 and the network utility operator's requirements. Give notices for inspections and carry out tests as required.

1.4 INFORMATION FOR OPERATION AND MAINTENANCE

Provide the owner with the manufacturer maintenance information.

2 PRODUCTS

Appliances

KDC - Approved Building Consent Document - BC210441 - Pg 322 of 336 - 30/08/2021 - ComplyNZ

2.1 HEATED TOWEL RAIL

Heated towel rail straight or curved in profile and available in white powder coat or chrome plated finish. Designed to be heated by an electric element, central heating system or a combination of both.
Refer to SELECTIONS for product selection.

3 EXECUTION

KDC - Approved Building Consent Document - BC210441 - Pg 323 of 336 - 30/08/2021 - ComplyNZ

Conditions

3.1 GENERALLY

Carry out the whole of this work to the requirements of NZBC G10/AS1: (Gas); NZBC G11/AS1; NZBC G12/AS1; AS/NZS 5601.1.

Application

3.2 CONNECT UP HEATED TOWEL RAIL

Install heated towel rail where located on the plans. Connect hot water inlet and outlet to the heated towel rail. Fit inlet and outlet with isolating valves.

Commissioning

3.3 POST INSTALLATION TESTING

The completed system to be fully tested and commissioned in accordance with the manufacturer's recommendations and as necessary to ensure the system is complete.

Testing to include:	Pressure test to ensure any components in the system will withstand the test pressure and has been tested for leakage and proved to be sound.

Rectify any sub-standard items and re-test.

3.4 FINAL INSPECTION AND TEST

Submit the work for inspection and test and prove to the satisfaction of the network utility operator that the installation complies with all Acts and Regulations.

Completion

3.5 REPLACE

Replace damaged, cracked or marked elements.

3.6 LEAVE

Leave appliances clean and in full working order and leave work to the standard required by following procedures.

3.7 REMOVE

Remove debris, unused materials and elements from the site.

4 SELECTIONS

Appliances

4.1 CENTRAL HEATING SYSTEM - HEATED TOWEL RAILS

Model:	Refer to Client and Manufacturers Specification.
Location:	As per sheet 602

7612 RESIDENTIAL EXTRACT SYSTEMS

1 GENERAL

This section relates to the supply and installation of extract systems for residential applications. It includes:

- Kitchen extract systems
- Bathroom and laundry extract systems

1.1 RELATED WORK

Refer to the electrical section(s) for general electrical requirements.

Documents

1.2 DOCUMENTS

Refer to the general section 1233 REFERENCED DOCUMENTS. The following documents are specifically referred to in this section:

NZBC E2/AS1	External moisture
NZBC E3/AS1	Internal moisture
NZBC G4/AS1	Ventilation
AS/NZS 3000	Electrical installations (known as the Australian/New Zealand Wiring Rules)
AS/NZS 60335.1	Household and similar electrical appliances - Safety - General requirements

Electricity (Safety) Regulations 2010 (Reprint as at 21 January 2019).

Documents listed above and cited in the clauses that follow are part of this specification. However, this specification takes precedence in the event of it being at variance with the cited document.

1.3 MANUFACTURER/SUPPLIER DOCUMENTS

Refer to Client and Manufacturers Specification.

1.4 WARRANTY - MANUFACTURER/SUPPLIER

Provide a material manufacturer/supplier warranty:

- Provide this warranty on the manufacturer/supplier standard form.
- Commence the warranty from the date of practical completion of the contract works.

Refer to the general section 1237 WARRANTIES for additional requirements.

1.5 WARRANTY - INSTALLER/APPLICATOR

Provide an installer/applicator warranty:

- Provide this warranty on the installer/applicator standard form.
- Commence the warranty from the date of practical completion of the contract works.

Refer to the general section 1237 WARRANTIES for additional requirements.

Requirements

1.6 CO-ORDINATE WORK

Co-ordinate all items with the main contractor, in particular cutting of penetrations and waterproofing. Exterior penetrations to NZBC E2/AS1 as consistent with the project requirements.

1.7 QUALIFICATIONS GENERALLY

Refer to 1270 CONSTRUCTION for requirements relating to qualifications.

1.8 ELECTRICAL QUALIFICATION

Registered electrician to carry out work to Electricity (Safety) Regulations 2010.

1.9 NO SUBSTITUTIONS

Substitutions are not permitted to any of the specified systems, components and associated products listed in this section.

KDC - Approved Building Consent Document - BC210441 - Pg 324 of 336 - 30/08/2021 - ComplyNZ

1.10 INFORMATION FOR OPERATION AND MAINTENANCE

Refer to the general section 1234 DOCUMENTATION for provision of the following general operation and maintenance information as electronic PDF format documents:

Provide this information prior to practical completion.

Compliance information

1.11 INFORMATION REQUIRED FOR CODE COMPLIANCE

Provide the following compliance documentation:

- Manufacturer, importers or distributors warranty
- Installer warranty
- Other information required by the BCA in the Building Consent Approval documents.

2 PRODUCTS

Kitchen extract systems

2.1 KITCHEN RANGEHOOD EXTRACT - TO ROOF

Mechanical rangehood extract system comprised of rangehood canopy, extract fan, filter, lighting, controls, metal ducting, proprietary roof flashing and cowl.
Refer to SELECTIONS for options.

Bathroom and laundry extract systems

2.2 CEILING MOUNTED FAN, DUCTED TO EXTERIOR WALL / SOFFIT

Mechanical fan ducted system comprised of ceiling fan, filters, controls, aluminium foil flexi ducting joined to a solid duct sleeve sloped to remove condensation, exterior weatherproof grille and flashing.
Refer to SELECTIONS for options.

2.3 LAUNDRY DRYER VENT, DUCTED TO EXTERIOR WALL

Laundry dryer vent comprised of, filter, metal ducting, exterior weatherproof grille and flashing.
Refer to SELECTIONS for options.

Component

2.4 ELECTRICAL FAN SWITCH

Independent switch connected to socket outlet located near fan / unit.
Refer to SELECTIONS for run on timer requirements.

3 EXECUTION

Installation - mechanical ventilation

3.1 INSTALL KITCHEN RANGEHOOD

Install rangehood to AS/NZS 3000, AS/NZS 60335.1 and manufacturer installation instructions. Connect unit with ducting to exit either through roof or exterior wall / soffit. Plug into electrical socket.

3.2 INSTALL LAUNDRY DRYER VENT, DUCTED TO EXTERIOR WALL

Install exterior ducted fans to manufacturer requirements.

3.3 INSULATION CLEARANCE

Provide 50mm clearance between insulation and motor unit / electrical enclosure. Insulation can abut ducts.

3.4 ELECTRICAL INSTALLATION

Install switch and socket outlets to AS/NZS 3000 and AS/NZS 60335.1. Refer to electrical section(s) for requirements.

Conditions

KDC - Approved Building Consent Document - BC210441 - Pg 325 of 336 - 30/08/2021 - ComplyNZ

3.5 DELIVERY, STORAGE & HANDLING OF PRODUCTS

Refer to 1270 CONSTRUCTION for requirements relating to delivery, storage and handling of products.

Completion & commissioning

3.6 COMPLETION MATTERS

Refer to 1270 CONSTRUCTION for completion requirements and if required commissioning requirements.

4 SELECTIONS

Kitchen extract systems

4.1 KITCHEN RANGEHOOD EXTRACT - TO ROOF

Refer to Client and Manufacturers Specification.

Bathroom and laundry extract systems

4.2 CEILING MOUNTED FAN, DUCTED TO EXTERIOR WALL / SOFFIT

Refer to Client and Manufacturers Specification.

4.3 LAUNDRY DRYER VENT, DUCTED TO EXTERIOR WALL

Refer to Client and Manufacturers Specification.

KDC - Approved Building Consent Document - BC210441 - Pg 326 of 336 - 30/08/2021 - ComplyNZ

7701 ELECTRICAL BASIC

1 GENERAL

This section relates to the wiring for domestic and small scale commercial installations, including:

- power
- lighting
- electrical automation
- security system
- complete with componentry
- electrically-powered fittings
- fire rated sealers, liners and accessories

1.1 ABBREVIATIONS AND DEFINITIONS

Refer to the general section 1232 INTERPRETATION & DEFINITIONS for abbreviations and definitions used throughout the specification.
The following abbreviations apply specifically to this section:

AFDD	Arc Fault Detection Device
ELV	Extra Low Voltage
GLS	general lighting service
IP	international (ingress) protection classification
NUO	Network Utility Operator
PCB	printed circuit board
PIR	passive infrared
SIA	security integration architecture
TPS	tough plastic sheathed
TCF	Telecommunications Carriers' Forum

Documents

KDC - Approved Building Consent Document - BC210441 - Pg 327 of 336 - 30/08/2021 - ComplyNZ

KDC - Approved Building Consent Document - BC210441 - Pg 328 of 336 - 30/08/2021 - ComplyNZ

1.2 DOCUMENTS

Refer to the general section 1233 REFERENCED DOCUMENTS. The following documents are specifically referred to in this section:

NZBC E2/AS1	External moisture
NZBC F6/AS1	Visibility in escape routes
NZBC F7/AS1	Warning systems
NZBC G4/AS1	Ventilation
NZBC G9/AS1	Electricity
AS/NZS 1125	Conductors in insulated electric cables and flexible cord
AS/NZS 1768	Lightning protection
AS/NZS 2201.1	Intruder alarm systems - Client's premises - Design, installation, commissioning and maintenance
AS 2293.1:2005	Emergency escape lighting and exit signs for buildings - System design, installation and operation
AS 2293.3:2005	Emergency escape lighting and exit signs for buildings - Emergency escape luminaires and exit signs
AS/NZS 3000	Electrical installations (known as the Australian/New Zealand Wiring Rules)
AS/NZS 3008.1.2	Electrical installations - Selection of cables - Cables for alternating voltages up to and including 0.6/1 kV - Typical New Zealand installation conditions
AS/NZS 3100	Approval and test specification-general requirements for electrical equipment
AS/NZS 3112	Approval and test specification - Plugs and socket-outlets
AS/NZS 3113	Approval and test specification - Ceiling roses
AS/NZS 3190	Approval and test specification - Residual current devices (current-operated earth-leakage devices)
AS/NZS 3439.3	Low-voltage switchgear and controlgear assemblies - Particular requirements for low-voltage switchgear and controlgear assemblies intended to be installed in places where unskilled persons have access for their use - Distribution boards
AS 3786	Smoke alarms
NZS 4514	Interconnected smoke alarms for houses
NZS 4246	Energy Efficiency - Installing bulking thermal insulation in residential buildings
AS/NZS 5000.2	Electric cables - Polymeric insulated - for working voltages up to and including 450/750v
AS/NZS 60335.1	Household and similar electrical appliances - Safety - General requirements
AS/NZS 60695.11.5	Fire hazard testing - Test flames - Needle-flame test method - Apparatus, conformity test arrangement and guidance.
AS/NZS 61439.3	Low-voltage switchgear and controlgear assemblies - Part 3: Distribution boards intended to be operated by ordinary persons (DBO).
IEC 61643	Components for low voltage surge protection devices

Electricity (Safety) Regulations 2010 (Reprint as at 21 January 2019).
TCF Premises Wiring Code of Practice 2011

Documents listed above and cited in the clauses that follow are part of this specification. However, this specification takes precedence in the event of it being at variance with the cited document.

Warranties

1.3 WARRANTY

Warrant the complete electrical installation under normal environmental and use conditions against failure of materials and execution.

1 year:	Warranty period

Refer to the general section for the required form of 1237WA WARRANTY AGREEMENT and details of when completed warranty must be submitted.

Requirements

1.4 COMPLY

Comply with the Electricity (Safety) Regulations 2010, AS/NZS 3000, AS/NZS 3008.1.2 and TCF Premises Wiring Code of Practice for listed and prescribed work and with the utility network operator's requirements. Apply for the service connection. Arrange for the required inspections of listed work. Pay all fees.

1.5 QUALIFICATIONS WORKERS – LICENSED UNDER STATUTE

Workers and supervisors to be appropriately qualified to applicable legislative requirements. Refer to 1270 CONSTRUCTION for additional requirements relating to qualifications.

1.6 ELECTRICAL CERTIFICATE OF COMPLIANCE

Supply a certificate of compliance (CoC) to the owner, and if required the NUO, as required by the Electricity (Safety) Regulations 2010, prior to connection.

- Arrange for the NUO to inspect before the meter installation, listed work inspection, polarity check and supply becoming live.
- Arrange for an inspector to inspect high risk electrical work as required by regulation 70.

1.7 ELECTRICAL SAFETY CERTIFICATE

Provide an Electrical Safety Certificate (ESC), as required by the Electricity (Safety) Regulations 2010, Reg 74A, to the owner and when required the BCA. To be provided no later than 20 working days after connection and prior to Practical Completion.

2 PRODUCTS

2.1 MAINS SUPPLY

Tough plastic sheathed neutral screened cable to AS/NZS 5000.2 and AS/NZS 3008.1.2, with a minimum rating of 60 amps per phase. Include pilot cable where required by network utility company.

2.2 CABLES

Tough plastic sheathed copper conductors to AS/NZS 5000.2, stranded above 1.0mm², and to AS/NZS 3008.1.2. Minimum sizes as below. Increase sizes if the method of installation, thermal insulation, cable length or load will reduce the cable rating below that of the MCB rating, or produce an excessive voltage drop.

Lighting circuits:	Domestic: 1.5mm² on 10 amp MCBs
Lighting circuits:	Commercial: 1.5mm² on 16 amp MCBs
Power circuits:	2.5mm² on 16 amp MCBs for domestic and unenclosed or unfilled cavity construction
	2.5mm² on 16 amp MCBs for domestic insulated construction, or filled cavity
	2.5mm² on 20 amp MCBs for unenclosed or unfilled cavity construction
	2.5mm² on 16 amp MCBs for insulated construction, or filled cavity, or lengths over 30 metres
Hot water cylinder circuits:	Single phase: 2.5mm² on 20 amp MCBs
Range/oven/hob circuits:	Single phase: 6mm² high temperature cable on 32 amp MCBs

Heat resistant cable for final connections to all heated appliances, and high temperature cable in ambient conditions that may be above 35°C (roof spaces above insulation etc).

2.3 METER BOX

Proprietary manufactured, zinc plated powder coated metal case, or ABS plastic, with glazed panel door, weatherproof where mounted outdoors, and complete with meter mounting, main switch and fuse.

2.4 DISTRIBUTION BOARD

Flush surface mount boards manufactured to AS/NZS 3439.3 , or AS/NZS 61439.3, and installed in accordance with AS/NZS 3000. Manufactured from engineering grade resin with a glow wire rating of 850°C, complete with neutral and earth busbars, and insulated comb phase bar. Distribution boards to have 20% spare capacity for future additions and alterations.

KDC - Approved Building Consent Document - BC210441 - Pg 329 of 336 - 30/08/2021 - ComplyNZ

2.5 CIRCUIT PROTECTION

General requirements including main switch 63A or 100A. Residual current protection 30mA, ensure RCCBs' meet Type A and comply with AS/NZS 3190. MCBs to 4.5kA or 6kA rated.

2.6 WALL BOXES

Standard grid size or equivalent to be manufactured from plastic or metal, with 2 or more gang size to be metal with steel inserts for accessory securing screws. Screw fixed.

2.7 SWITCH UNITS

Single pole switches to be 16 amp minimum rated, double pole or intermediate to be 16 amp minimum rated. All switches to be 230 volt a.c. polycarbonate flushplate units.
Label all switch units that control electrical equipment or special lighting circuits by proprietary engraved switch mechanisms where applicable.
Refer to drawings/schedules for number of switches per unit, dimmer units, neon (indicator or toggle) units and 2 way units.
Refer to SELECTIONS.

2.8 SWITCHED SOCKET UNITS

10 amp, 230 volt flat 3 pin socket outlets fitted with safety shutters and manufactured to AS/NZS 3100, AS/NZS 3112 and AS/NZS 3113, single or multi gang as detailed.

2.9 SURGE PROTECTION

Protection for the homes appliances with IEC 61643 Class ll surge protection devices fitted to the switchboard. For variable electronic equipment fit IEC 61643 Class lll surge protection to switched socket outlets.

2.10 CEILING ROSES

White plastic mounting base with screwed cover, manufactured to AS/NZS 3113. Terminal type. Suspended fittings to have sheathed round flexible cord to AS/NZS 3008.1.2. Refer to SELECTIONS.

2.11 BATTEN HOLDERS

Standard white plastic bayonet cap, with cap angled where wall mounted. Brass liners.

2.12 DOOR BELL SYSTEM

Complete with transformer for mounting on distribution board.

2.13 LIGHT FITTINGS

Fluorescent and High Intensity Discharge fittings with low loss control gear and power factor corrected to 0.95 minimum. Control gear suitable for dimming if this is required. All fittings complete with lamps; Incandescent GLS lamps pearl, coiled-coil 230v rated, bayonet cap; Fluorescent triphosphor 2700K; CFL; halogen ELV 12v dichroic reflector with cover glass unless detailed otherwise; integral/non-integral LEDs, reflectors, lenses, heatsinks and drivers - 3,000K to 4,000K, CRI >80, L70.

2.14 SPACE HEATERS

Fixed wired room heaters radiant or convector, and compliant with AS/NZS 60335.1. Flush or surface mount, fitted with safety cut-outs.

2.15 EXHAUST FANS

Ceiling, wall or duct mounted exhaust fans for ventilation to NZBC G4/AS1, and compliant with AS/NZS 60335.1.

2.16 HEATED TOWEL RAILS

Fixed wired heated towel warmers, double insulated, IPX4 splash-proof, compliant with AS/NZS 60335.1, scratch resistant powdercoated or chrome finish.

3 EXECUTION

3.1 MAIN SUPPLY

Lay underground mains to the NUO requirements. Excavate trench, install cable and marker tape and backfill.

KDC - Approved Building Consent Document - BC210441 - Pg 330 of 336 - 30/08/2021 - ComplyNZ

3.2 METER BOX

Fit to meter box manufacturer and Electricity Retailer requirements. Recess into external wall in sheltered area and flash to weatherproof to NZBC E2/AS1 fig 69. Arrange for meter installation and connection.

3.3 DISTRIBUTION BOARD

Fit to AS/NZS 3000 and board manufacturer requirements. Recess into wall or surface mount and ensure fire containment properties of the enclosure are maintained.

KDC - Approved Building Consent Document - BC210441 - Pg 331 of 336 - 30/08/2021 - ComplyNZ

3.4 CIRCUIT PROTECTION

Install MCBs at distribution board to AS/NZS 3000 to protect each final sub circuit.

3.5 MAIN EARTH

Provide a plastic toby box to contain and protect the earth electrode. Fix the connecting earth wiring closely and securely against wall surfaces.

3.6 EARTH LEAKAGE PROTECTION

Install RCD protection to AS/NZS 3000.

3.7 RCD - RESIDENTIAL INSTALLATIONS

Install 30mA RCD protection at the switchboard for all final sub circuits to control outlets and lighting except for fixed or stationary cooking equipment, to AS/NZS 3000.

3.8 RCD - SPECIFIC INSTALLATIONS

Install fixed wired RCD protected outlets (SRCD) in the following higher risk areas:

- Wet areas: bathrooms, laundries, kitchens.
- Near pools and water features.
- Where intended for use with cleaning equipment.
- Hand-held tools subject to movement in use, i.e. work-shops, garages.

3.9 SET-OUT

The position of outlets and equipment shown on drawings is indicative of requirements. Confirm documents and site conditions are not in conflict with other services or features. Resolve conflicts and discrepancies before proceeding with work affected. Confirm on site the exact location, disposition and mounting heights of all outlets, fittings, equipment, penetrations, and use of exposed wiring. Fix outlet items level, plumb and in line.

3.10 CABLING

Install wiring systems to AS/NZS 3000. All cabling run concealed. No TPS cable laid directly in concrete. Locate holes in timber framing for the passage of cables at the centre line of the timber member. Install cable in conduits where required to pass through concrete or underground. In walls run cabling horizontally and vertically in straight lines. In ceilings either run cabling along ceiling framing or attached to catenary wires. Clip cabling to ceiling framing/catenary wires.

3.11 CABLING CIRCUITS

Install all circuits with the appropriately rated cable and circuit protection. Install with a maximum of 8 light switch units or 4 double or single switched socket units on any circuit. Minimum 2 lighting circuits per floor. Separate circuits for all electric heating appliances. Kitchen sockets to be on at least two different circuits.

3.12 WALL BOXES

Mount flush in cavity construction size to fit products selected. Fix vertically mounted wall boxes to studs. Screw fix horizontally mounted switched socket outlet wall boxes to solid blocking or nogs. Fix switch panel wall boxes to solid blocking.

3.13 LIGHT FITTINGS

Install light fittings in locations and at heights specified and confirmed by the owner, in accordance with the fitting manufacturer requirements.

3.14 EXTRA LOW VOLTAGE LIGHTING

Use electronic, transformers (halogen) or drivers (LED) for ELV lamps, one transformer/driver per lamp. Locate to manufacturer requirements and as close as practicable to the lamp. Ensure transformers/drivers and rear of light fittings are adequately ventilated and appropriately clear of any building elements, to AS/NZS 3000.

3.15 SMOKE ALARMS

Install Type 1 domestic smoke alarm system to NZBC F7/AS1 3.0 **Domestic smoke alarms**, NZS 4514 and to the alarm manufacturer requirements. Fit neatly and without damage to the surrounding finish.

3.16 SURGE PROTECTION

Install surge protection devices to manufacturer requirements and in accordance with AS/NZS 3000 and AS/NZS 1768. When fitting IEC 61643 Class ll protection at the switchboard, protect the device by a dedicated MCB.

3.17 ELECTRIC POWERED FITTINGS AND EQUIPMENT

Install and wire fittings and equipment to individual fittings and equipment manufacturer requirements. Refer to the drawings for required layouts and locations for equipment. Refer to SELECTIONS for schedules of fittings.

3.18 BATHROOM ELECTRICAL FIXTURES

Install all electrical fixtures. Connect the following bathroom and toilet electrical items:

- Heated towel rails: Install to manufacturers requirements and installed in accordance with AS/NZS 3000
- Mirror demisters: Locate centrally above the wash hand basin(s). Connect wiring to room lighting unless specified otherwise.
- Exhaust fans: Install exhaust fans to manufacturer requirements. Installed in accordance with AS/NZS 3000 and NZBC G4/AS1.

3.19 OUTDOOR/EXTERIOR SERVICES

Install all wiring systems in accordance with AS/NZS 3000 and in accordance with the manufacturer recommendations:
Provide circuits and connections for exterior installations, including ELV 12/24 Volt path lighting and electronic irrigation systems. Refer to drawings for connection points. Where underground, ensure appropriate protection, such as thickness of sheathing, conduit, depth of cabling, and proximity to other services.

Use the appropriate rated fittings for power control and power supply. Weather protected switches and sockets to IP56. Install to manufacturer specifications using recommended fittings and sealants to maintain the products integrity.

Earth leakage protection to be provided for in areas where there is increased risk to human safety in the form of either RCDs at the distribution board, or socket outlet. RCDs are recommended for visible awareness of protection.

3.20 LABELLING

Include label under each controller, switch and circuit breaker on distribution boards. Include a warning notice if light dimmers are used in the installation. List the rating of each circuit.

Completion & Commissioning

3.21 COMPLETION MATTERS

Refer to 1270 CONSTRUCTION for completion requirements and if required commissioning requirements.

4 SELECTIONS

Materials

4.1 SELECTIONS - FITTINGS AND HARDWARE

Confirm selections of all outlet fittings and hardware with the owner in writing before ordering.

4.2 METER BOX

Refer to Client and Manufacturers Specification.

4.3 DISTRIBUTION BOARD

Refer to Client and Manufacturers Specification.

Outlets - fittings

KDC - Approved Building Consent Document - BC210441 - Pg 332 of 336 - 30/08/2021 - ComplyNZ

4.4 INTERIOR OUTLETS

Refer to Client and Manufacturers Specification.

4.5 INTERNAL LIGHT FITTINGS

Refer to Client and Manufacturers Specification.

4.6 EXTERNAL LIGHT FITTINGS

Refer to Client and Manufacturers Specification.

4.7 MISCELLANEOUS ELECTRICAL ITEMS

Refer to Client and Manufacturers Specification.

4.8 SPACE HEATERS

Location:	Living
Brand / type:	Real Flame Ignite 50" / RF XLF50

4.9 HEATED TOWEL RAILS

Refer to Client and Manufacturers Specification.

4.10 BATHROOM FANS AND HEATERS

Refer to Client and Manufacturers Specification.

4.11 ELECTRICAL APPLIANCES

Refer to Client and Manufacturers Specification.

KDC - Approved Building Consent Document - BC210441 - Pg 333 of 336 - 30/08/2021 - ComplyNZ

4161MI MARSHALL WEATHERIZATION SYSTEM

1 GENERAL

This section relates to the application of the **Marshall Weatherization System** which consists of:

- **Tekton® Building Wrap** (also called **Tekton HouseWrap)**
- **HYDRA wall underlay**
- **HYDRA roof underlay**
- **SUPER-STICK Building Tape®**
- **Tekton® Seam Tape**
- **One-Piece Sill Tape**
- **TRADE-SEAL** (penetration seal)
- **Protecto Wrap Detail Tape**
- **Protecto Wrap Sill Tape**
- **Protecto Tak** (spray primer/adhesive)

KDC - Approved Building Consent Document - BC210441 - Pg 334 of 336 - 30/08/2021 - ComplyNZ

1.1 ABBREVIATIONS AND DEFINITIONS

Refer to the general section 1232 INTERPRETATION & DEFINITIONS for abbreviations and definitions used throughout the specification.

The following definitions apply specifically to this section:

Wall underlay	the same meaning as defined in NZBC E2/AS1, covering kraft based and synthetic wall underlays, sometimes called, wall wraps, building wraps or building papers.
Roof underlay	the same meaning as defined in NZBC E2/AS1, covering kraft based and synthetic roof underlays

Documents

1.2 DOCUMENTS

Refer to the general section 1233 REFERENCED DOCUMENTS. The following documents are specifically referred to in this section:

NZBC B2/AS1	Durability
NZBC E2/AS1	External moisture

1.3 MANUFACTURER/SUPPLIER DOCUMENTS

Manufacturer's and supplier's documents relating to this part of the work:
Specification for **Marshall Weatherization System**
Specification for **Tekton® Building Wrap**
Brochure for **Tekton® HouseWrap**
Specification for **SUPER-STICK Building Tape®**
Brochure for **SUPER-STICK Building Tape®**Specification for **TRADE-SEAL**
Brochure for **TRADE-SEAL**
BRANZ Appraisal 444 - Protecto Sill Window Sealing System
BRANZ Appraisal 548 - Tekton® Building Wrap
BRANZ Appraisal 591 - One Piece Sill Tape
BRANZ Appraisal 621 - The Marshall Weatherization System
BRANZ Appraisal 719 - Trade-Seal Pipe and Penetration Seal
BRANZ Appraisal 846 - SUPER-STICK Flexible Flashing Tape
BRANZ Appraisal 1071 - HYDRA Roof Underlay
BRANZ Appraisal 1072 - HYDRA Wall Underlay

Manufacturer/supplier contact details

Company:	**Marshall Innovations Limited**
Web:	www.mwnz.com
Email:	headoffice@mwnz.com
Telephone:	0800 776 9727

Warranties

1.4 WARRANTY - MANUFACTURER/SUPPLIER

15 years:Provide a material manufacturer/supplier warranty:

15 years:	For **Tekton® Building Wrap**
15 years:	For **HYDRA wall underlay**
15 years:	For **HYDRA roof underlay**
15 years:	For **SUPER-STICK Building Tape®**
15 years:	For **Tekton® Seam Tape**
15 years:	For **One-Piece Sill Tape**
15 years:	For **TRADE-SEAL**
15 years:	For **Protecto Sill Window System**

- Provide this warranty on the manufacturer/supplier standard form.
- Commence the warranty from the date of practical completion of the contract works.

Refer to the general section 1237 WARRANTIES for additional requirements.

Requirements

1.5 QUALIFICATIONS - WORKERS - MANUFACTURER / SUPPLIER REQUIREMENTS

Work to be carried out by competent, experienced tradespeople, who are familiar with the **Marshall Innovations Limited** materials and techniques specified, by or under the supervision of a Licensed Building Practitioner (LBP) with the relevant Licence Class.

1.6 NO SUBSTITUTIONS

Substitutions are not permitted to any of the specified **Marshall Innovations Limited** systems, components and associated products listed in this section.

Performance - general

1.7 SURFACE FIRE PROPERTIES FOR LININGS

Flammability index ≤ 5, to NZS/AS 1530.2. Refer to SELECTIONS.

2 PRODUCTS

Materials

2.1 TEKTON BUILDING WRAP

Tekton® Building Wrap, a synthetic breather-type wall underlay, as a coated spun-bonded polypropylene product approximately 0.6mm thick. Supplied in rolls 2740mm x 37m and 1370mm x 37m.

Accessories

2.2 FIXINGS

Staples, clouts, screws, proprietary wrap fixings or other temporary fixings to attach the wall or roof underlay to the framing.

3 EXECUTION

Conditions

3.1 GENERAL REQUIREMENTS

To NZBC E2/AS1 Table 23 Properties of Roof Underlays and Wall Underlays; and manufacturers technical literature.
Note: Care should be taken not to expose the underlay to continuous wet and windy conditions.

3.2 DELIVERY, STORAGE & HANDLING OF PRODUCTS

Refer to 1270 CONSTRUCTION for requirements relating to delivery, storage and handling of products.
Store all products under clean dry conditions that ensure no deterioration or damage. Store rolls in an upright position on a smooth floor and protected from sunlight, UV radiation and moisture. Rolls of **Tekton® Building Wrap** to be to be stored on end.

KDC - Approved Building Consent Document - BC210441 - Pg 335 of 336 - 30/08/2021 - ComplyNZ

3.3 ROUTINE MATTERS

Refer to 1250 TEMPORARY WORKS & SERVICES for protection requirements.
Refer to 1270 CONSTRUCTION for requirements relating to defective or damaged work, removal of protection and cleaning.

3.4 PRE-INSTALLATION REQUIREMENTS

Before starting work, check that the framing will allow work of the required standard. The framing must be free from any sharp protrusions that may damage the wrap/underlay. Carry out remedial work identified before the installation of the **Marshall Weatherization System**.

Installation/application - generally

3.5 STANDARDS AND TOLERANCES

To NZBC B2/AS1 and NZBC E2/AS1. Refer to the general section 1270 CONSTRUCTION for general requirements.

Installation - Tekton® Building Wrap

3.6 WRAP/UNDERLAY GENERALLY

To comply with Marshall Innovations Limited specification for the **Marshall Weatherization System**, BRANZ Appraisal 621 - The **Marshall Weatherization System** and BRANZ Appraisal 548 - Tekton® Building Wrap.

Face branded side of the wrap/underlay away from the framing. Run horizontally and extend from upper side of the top plate to the underside of bearers or wall plates supporting ground floor joists, or below bottom plates on concrete slabs.

Ensure horizontal laps no less than 75mm with the direction of the lap ensuring that water is shed to the outside. End laps to be made over framing and be no less than 150mm wide.

3.7 FIXINGS

Fix the wrap/underlay into place using 6mm to 8mm zinc plated staples, hot dip galvanised large head clouts, tek screws or proprietary wrap/underlay fixings. Care to be taken when fixing in windy conditions, due to large sail area created by roll widths.

3.8 POSITION ROLL

Position roll against the framing with a short length of wrap/underlay free of the roll. Align the guide marks printed on the **Tekton® Building Wrap** with visible studs and nail/staple to the framing.

3.9 FIX TO FRAMING

Unroll wrap/underlay across framing and fix to all framing members at a maximum of 300mm centres. Keep straight and taught over framing. Unroll wrap/underlay across framing and fix to all framing members at a maximum of 300mm centres. Keep straight and taut over framing.

Completion

3.10 COMPLETION MATTERS

Refer to 1270 CONSTRUCTION for completion requirements and if required commissioning requirements.

3.11 COMPLETION - TESTS & CERTIFICATION

Refer to 1270 CONSTRUCTION for general test and certification requirements at completion.

4 SELECTIONS

Materials

4.1 TEKTON BUILDING WRAP

Location:	Exterior columns
Brand:	Marshall Innovations Ltd
Underlay:	**Tekton® Building Wrap**

KDC - Approved Building Consent Document - BC210441 - Pg 336 of 336 - 30/08/2021 - ComplyNZ

19 October 2021

ACDL Trustee Limited
17 Pinefield Road
Whenuapai
Auckland 0618

Dear Sir or Madam,

Reference Number: BC210441
Project Location: 53 Robert Hastie Drive

Mangawhai
Legal description of land where building is located: Lot 81 DP 556753
Project Description: New Single Storey 4 Bedroom Dwelling with Attached Double Garage and Swimming Pool
IR Number: 1

Inspection Results:
WASTEPIPES - 19 Oct 2021 @ 10:22 by Steve Corkin

Inspection Outcome: **PASS** - The BCA is satisfied, on reasonable grounds, that the aspects of building work pertaining to this inspection demonstrate compliance with the building consent.

Inspection Summary: Paul Massey is certified plumber, 100mm and 65mm singles , main and 2 branches, complies wirh AS/NZS 3500.2 for gradient, bedding rolled junctions, sleeves through slab and all water tested. H/W/C waste is trapped under slab, ok to cover

Your next inspection will be: **Prepour**
Please contact us 48 hours before you require this to book your inspection.

Outstanding Required Documents for this Building
Prepour

- B1: Ground bearing certificate
- B1: Foundations - Construction monitoring records

Floor Slab

- B1: Slab - Construction monitoring records

Drainage

- E1: Stormwater drain leakage test and as-built plans
- G13: As-builts, drainlayer details, pipework test

Final

- G9: Energy works certificate
- G12: Water potability certification - Non NUO supply

History

Inspection Name	Summary
Siting and Site Scrape Inspection	-
Prepour	-
Pool Prepour	-
Wastepipes	**PASS** - 19 Oct 2021
Floor Slab	-
Framing / Pre-wrap	-
Post Wrap / Cavity	-
Preline	-
Post Line	-
Drainage	-
Final	-

Yours Sincerely,

Steve Corkin
Building Services Officer
On behalf of: Kaipara District Council

Notes: branch



Notes: as built

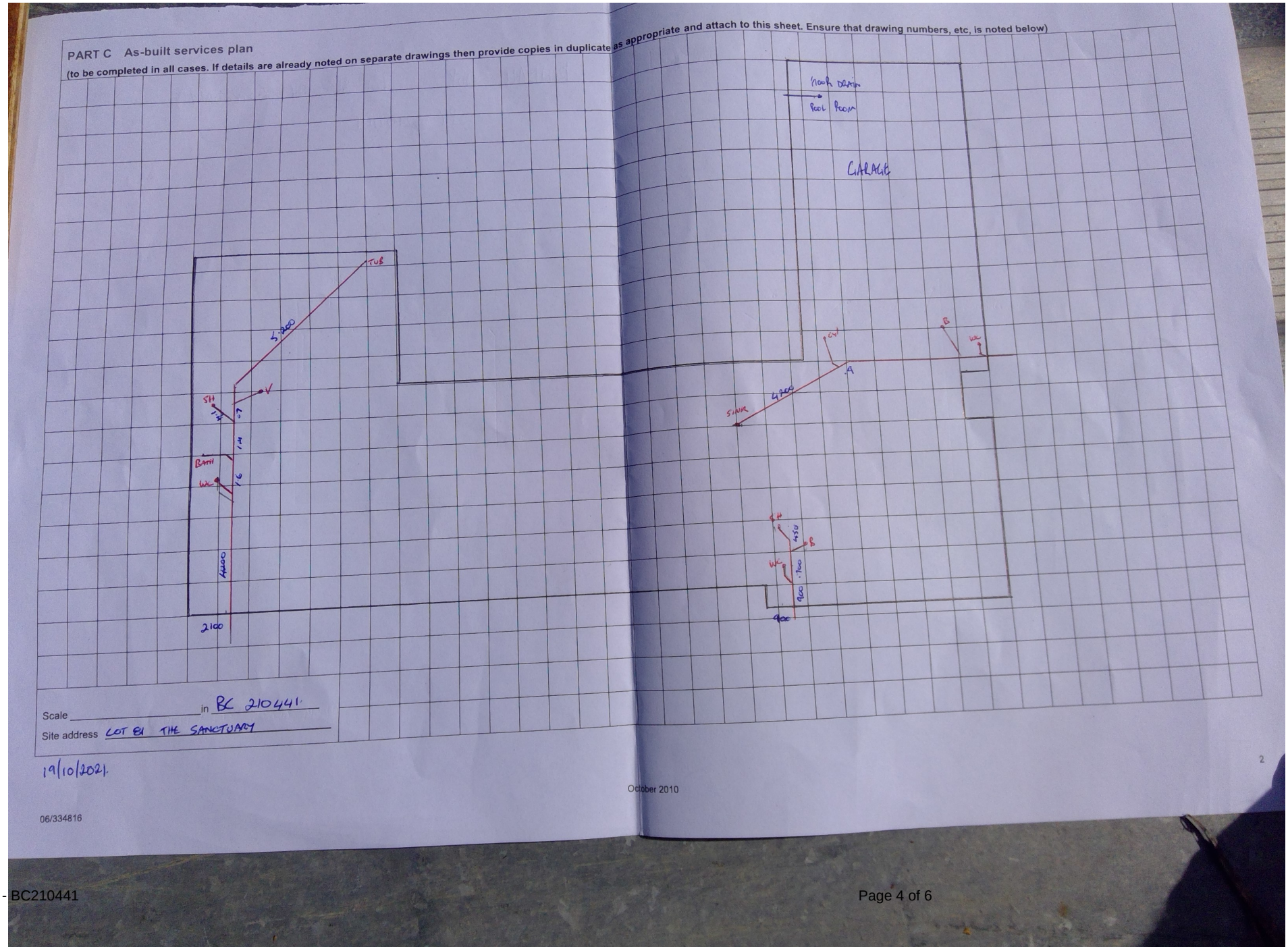

Notes: pipework



Notes: far end



21 October 2021

ACDL Trustee Limited
17 Pinefield Road
Whenuapai
Auckland 0618

Dear Sir or Madam,

Reference Number: BC210441
Project Location: 53 Robert Hastie Drive

Mangawhai
Legal description of land where building is located: Lot 81 DP 556753
Project Description: New Single Storey 4 Bedroom Dwelling with Attached Double Garage and Swimming Pool
IR Number: 2

Inspection Results:
PREPOUR - 21 Oct 2021 @ 09:42 by Steve Corkin

Inspection Outcome: INCOMPLETE - Some aspects of the building work pertaining to this inspection have yet to be checked and confirmed as complying with the building consent.

FLOOR SLAB - 21 Oct 2021 @ 09:42 by Steve Corkin

Inspection Outcome: FAIL- The following aspects of this inspection have resulted in a Fail result -- see the item(s) below:

Required Docs:
Please load to the portal the Geotech engineers site notes

These may be viewed at time of next inspection.

Formal Directive: See above Geotech site notes required (only reason for red cross)

Inspection Summary: The raft construction including, edge beam, ribs, thickening, shower recess HD12 reinforcing, SE62 mesh , pods and DPM (taped to all penetrations) is completed as per consent plans, all clearances are compliant .OK to pour (see above)

Your next inspection will be: **Framing / Pre-wrap**
Please contact us 48 hours before you require this to book your inspection.

Outstanding Required Documents for this Building
Prepour

- B1: Ground bearing certificate
- B1: Foundations - Construction monitoring records

Floor Slab

- B1: Slab - Construction monitoring records

Drainage

- E1: Stormwater drain leakage test and as-built plans
- G13: As-builts, drainlayer details, pipework test

Final

- G9: Energy works certificate
- G12: Water potability certification - Non NUO supply

History

Inspection Name	**Summary**
Siting and Site Scrape Inspection	-
Prepour	**IN-PROGRESS** - 21 Oct 2021
Pool Prepour	-
Wastepipes	**PASS** - 19 Oct 2021
Floor Slab	**FAIL** - 21 Oct 2021
	View at next inspection
Framing / Pre-wrap	-
Post Wrap / Cavity	-
Preline	-
Post Line	-
Drainage	-
Final	-

Yours Sincerely,

Steve Corkin
Building Services Officer
On behalf of: Kaipara District Council

Notes: thickening

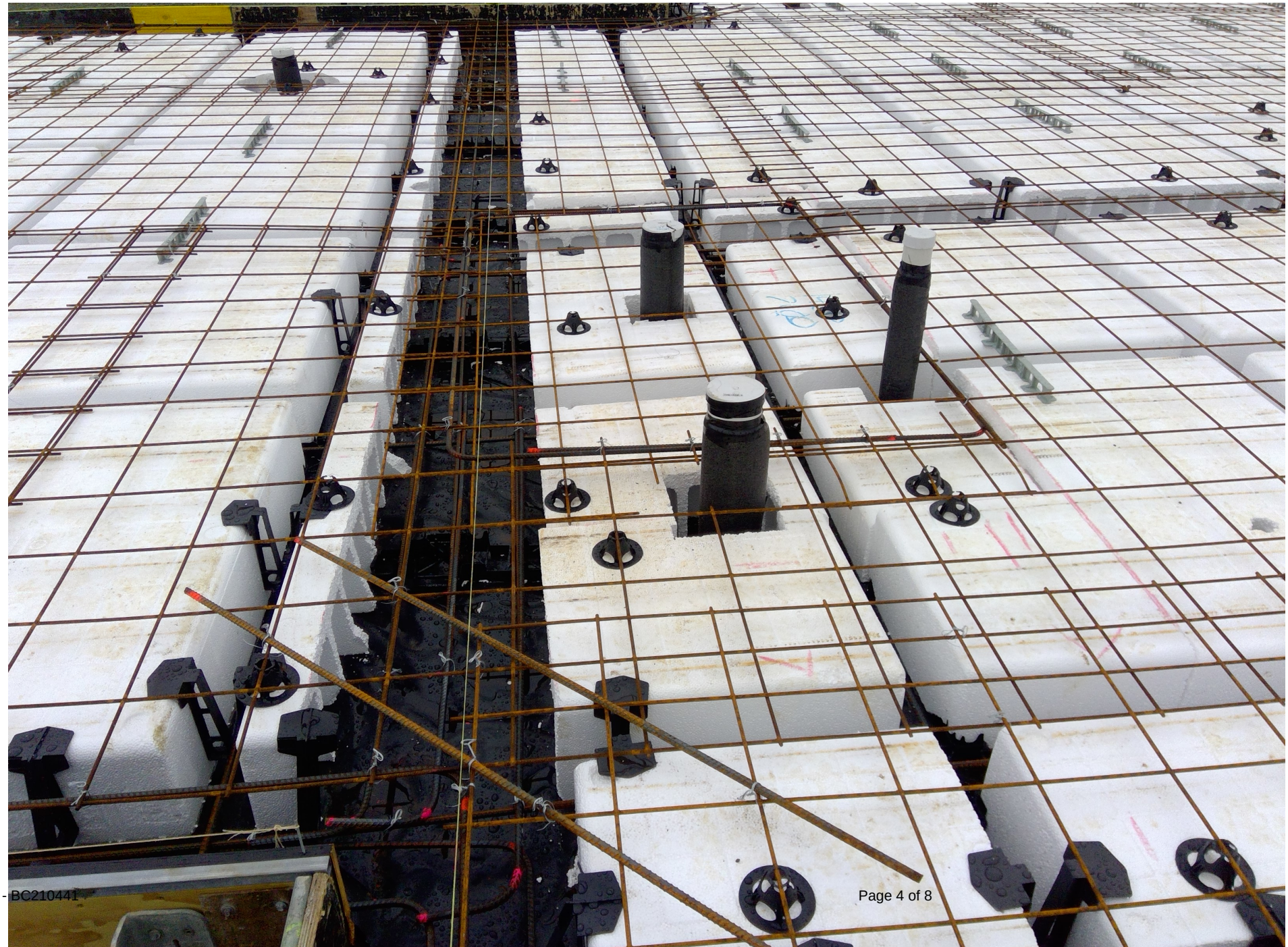

Notes: better mesh



Notes: mesh



Notes: raft

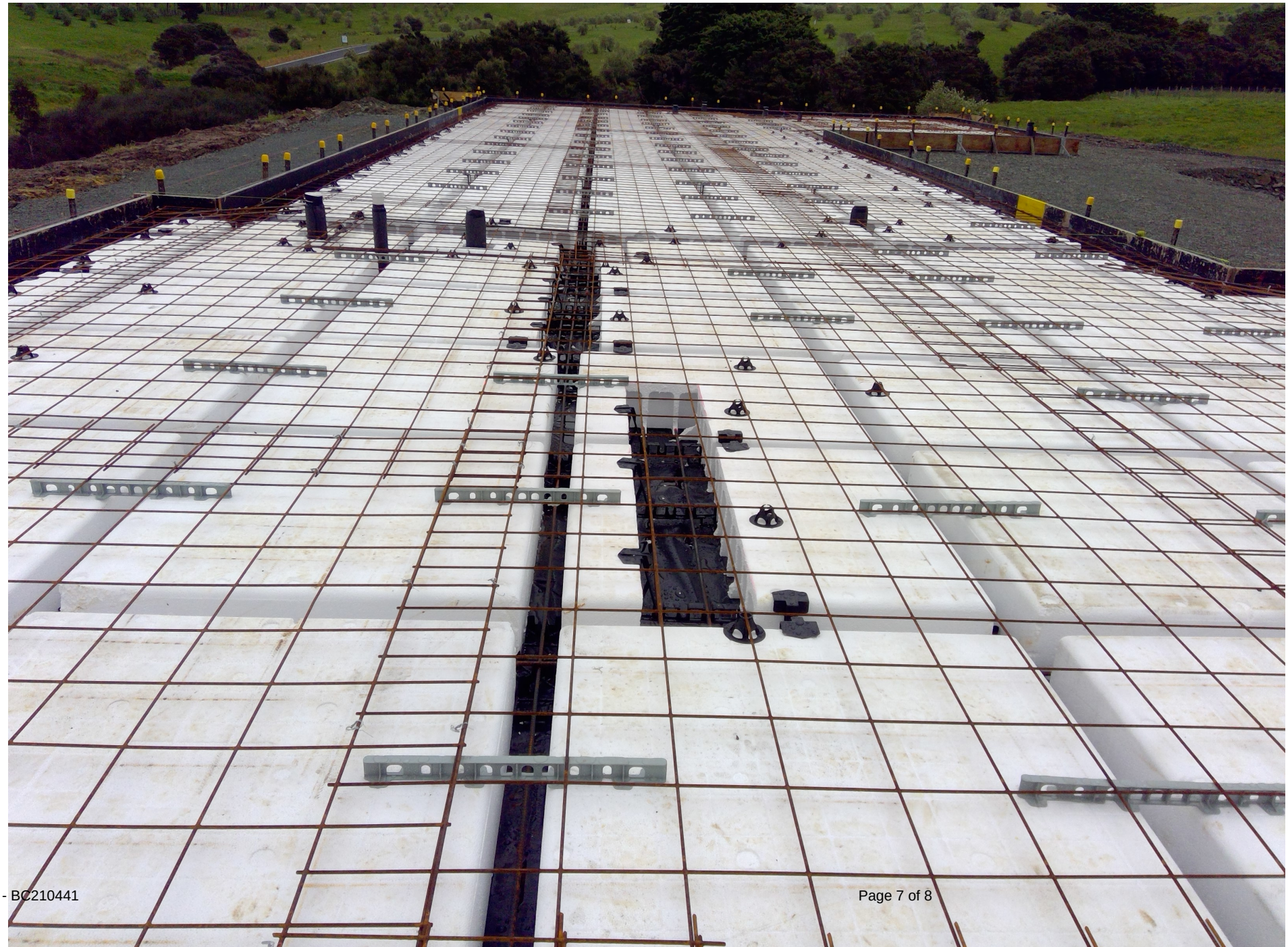

Notes: other end

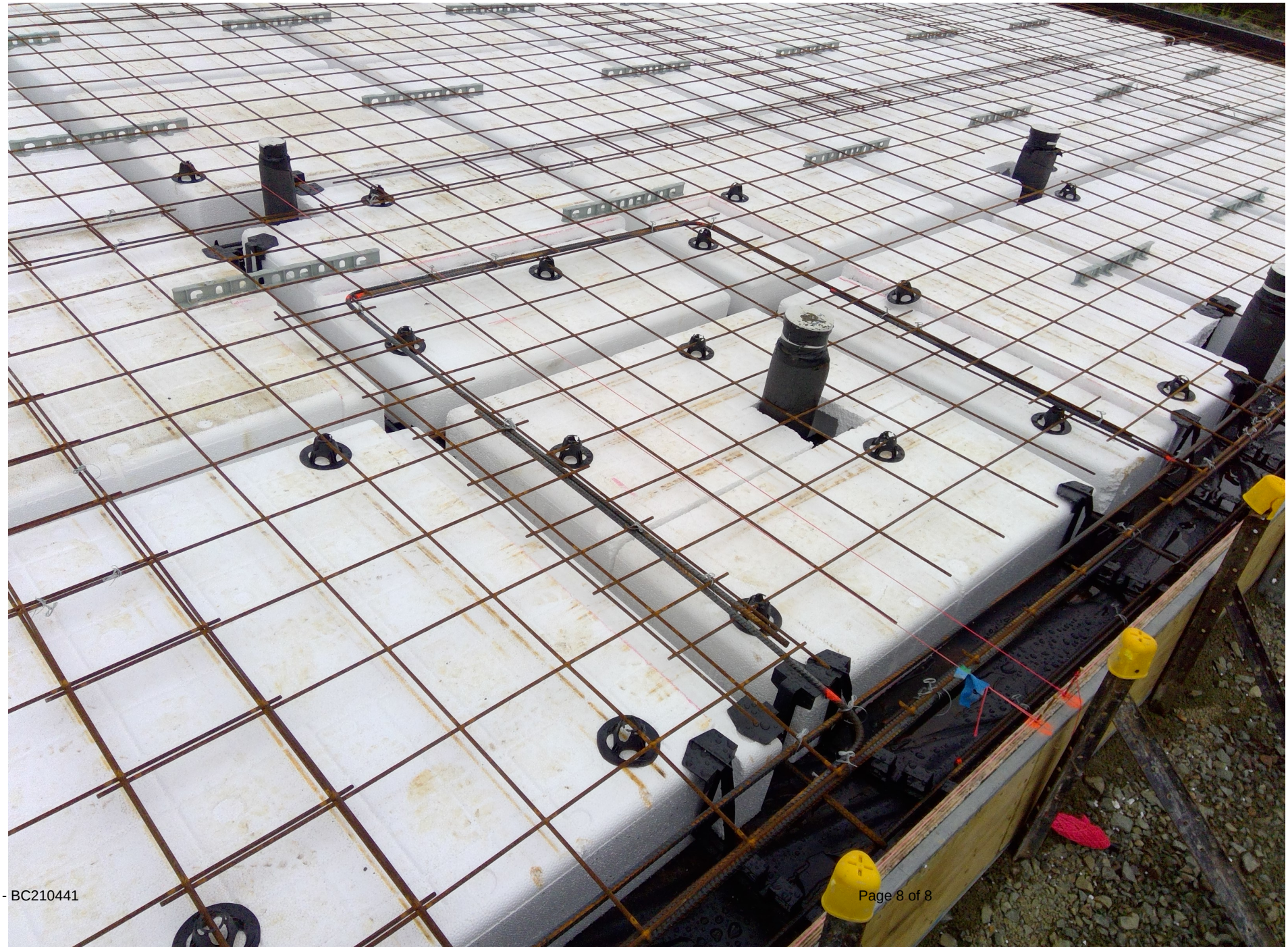

03 December 2021

ACDL Trustee Limited
17 Pinefield Road
Whenuapai
Auckland 0618

Dear Sir or Madam,

Reference Number: BC210441
Project Location: 53 Robert Hastie Drive

Mangawhai
Legal description of land where building is located: Lot 81 DP 556753
Project Description: New Single Storey 4 Bedroom Dwelling with Attached Double Garage and Swimming Pool
IR Number: 3

Inspection Results:
FLOOR SLAB - 03 Dec 2021 @ 09:56 by Matthew Williams

Inspection Outcome: PASS - The BCA is satisfied, on reasonable grounds, that the aspects of building work pertaining to this inspection demonstrate compliance with the building consent.

FRAMING / PRE-WRAP - 03 Dec 2021 @ 09:55 by Matthew Williams

Inspection Outcome: **PASS** - The BCA is satisfied, on reasonable grounds, that the aspects of building work pertaining to this inspection demonstrate compliance with the building consent.

Site Communication: Framing inspection. As disscussed onsite. Please fill out the minior vartion form for the rigid air barrier change. All bottom plate, Lintel, Top plate and truss conections comply.

Your next inspection will be: **Post Wrap / Cavity**
Please contact us 48 hours before you require this to book your inspection.

Outstanding Required Documents for this Building
Prepour

- B1: Foundations - Construction monitoring records

Floor Slab

- B1: Slab - Construction monitoring records

Drainage

- E1: Stormwater drain leakage test and as-built plans
- G13: As-builts, drainlayer details, pipework test

Final

- G9: Energy works certificate
- G12: Water potability certification - Non NUO supply

History

Inspection Name	Summary
Siting and Site Scrape Inspection	-
Prepour	IN-PROGRESS - 21 Oct 2021
Pool Prepour	-
Wastepipes	PASS - 19 Oct 2021
Floor Slab	PASS - 03 Dec 2021
Framing / Pre-wrap	PASS - 03 Dec 2021
Post Wrap / Cavity	-
Preline	-
Post Line	-
Drainage	-
Final	-

Yours Sincerely,



Matthew Williams
Building Services Officer
On behalf of: Kaipara District Council

02 February 2022

ACDL Trustee Limited
17 Pinefield Road
Whenuapai
Auckland 0618

Dear Sir or Madam,

Reference Number: BC210441
Project Location: 53 Robert Hastie Drive

Mangawhai
Legal description of land where building is located: Lot 81 DP 556753
Project Description: New Single Storey 4 Bedroom Dwelling with Attached Double Garage and Swimming Pool
IR Number: 4

Note: No inspections have been recorded since last inspection report was generated.

Inspection Summary: Framing to walls and roof completed to master bed room. Steel beams and posts bolted with point loads in place. Lintel to stud, bottom plate to stud and top plate to stud fixings completed. Rafters completed, fixed with joist hangers and mechanical fixings. Roof strap braces in place. Minor variation required for 2 added sky lights. 90x45mm purlins fixed with 2x90mm nails and 1 purlin screw. Ply braces to exterior fixed at 150mm centers. Ceiling batons and diaphragm ceiling to be checked at pre line. Brace wall connections completed. Okay to warp existing areas.

Your next inspection will be: **Post Wrap / Cavity**
Please contact us 48 hours before you require this to book your inspection.

Outstanding Required Documents for this Building
Prepour

- B1: Foundations - Construction monitoring records

Floor Slab

- B1: Slab - Construction monitoring records

Drainage

- E1: Stormwater drain leakage test and as-built plans
- G13: As-builts, drainlayer details, pipework test

Final

- G9: Energy works certificate
- G12: Water potability certification - Non NUO supply

History

Inspection Name	Summary
Siting and Site Scrape Inspection	-
Prepour	IN-PROGRESS - 21 Oct 2021
Pool Prepour	-
Wastepipes	PASS - 19 Oct 2021
Floor Slab	PASS - 03 Dec 2021
Framing / Pre-wrap	PASS - 03 Dec 2021
Post Wrap / Cavity	PASS
Preline	-
Post Line	-
Drainage	-
Final	-

Yours Sincerely,



Greg Bellam
Senior Building Services Officer
On behalf of: Kaipara District Council

Notes: .



Notes: .



Notes: .



Notes: .



Notes: .



Notes: .



Notes: .



04 February 2022

ACDL Trustee Limited
17 Pinefield Road
Whenuapai
Auckland 0618

Dear Sir or Madam,

Reference Number: BC210441
Project Location: 53 Robert Hastie Drive

Mangawhai
Legal description of land where building is located: Lot 81 DP 556753
Project Description: New Single Storey 4 Bedroom Dwelling with Attached Double Garage and Swimming Pool
IR Number: 5

Inspection Results:
PRELINE - 04 Feb 2022 @ 11:39 by Greg Bellam

Inspection Outcome: **PASS** - The BCA is satisfied, on reasonable grounds, that the aspects of building work pertaining to this inspection demonstrate compliance with the building consent.

Formal Directive: Designer to confirm diaphragm ceiling to living room. rondo battens held in place with clips (not fixed to bottom cord). Okay to line with confirmation of rondo clips from Gib.

Inspection Summary: preline building and plumbing completed as per consented plans, except formal directive. This can be checked at post line. Insulation to walls and ceilings in place. Brace fixings as per framing inspection. Moisture levels at 13-15%. Water supply completed with lines supported in place. Metal angles to showers. Waste pipes completed with stud stiffeners where wastes pipes drilled through studs. Plumber, Paul Massey

Your next inspection will be: **Post Line**
Please contact us 48 hours before you require this to book your inspection.

Outstanding Required Documents for this Building
Prepour

- B1: Foundations - Construction monitoring records

Floor Slab

- B1: Slab - Construction monitoring records

Drainage

- E1: Stormwater drain leakage test and as-built plans
- G13: As-builts, drainlayer details, pipework test

Final

- G9: Energy works certificate
- G12: Water potability certification - Non NUO supply

History

Inspection Name	Summary
Siting and Site Scrape Inspection	-
Prepour	IN-PROGRESS - 21 Oct 2021
Pool Prepour	-
Wastepipes	PASS - 19 Oct 2021
Floor Slab	PASS - 03 Dec 2021
Framing / Pre-wrap	PASS - 03 Dec 2021
Post Wrap / Cavity	PASS
Preline	PASS - 04 Feb 2022
Post Line	-
Drainage	-
Final	-

Yours Sincerely,



Greg Bellam
Senior Building Services Officer
On behalf of: Kaipara District Council

Notes: .



Notes: .



Notes: .



09 February 2022

ACDL Trustee Limited
17 Pinefield Road
Whenuapai
Auckland 0618

Dear Sir or Madam,

Reference Number: BC210441
Project Location: 53 Robert Hastie Drive

Mangawhai
Legal description of land where building is located: Lot 81 DP 556753
Project Description: New Single Storey 4 Bedroom Dwelling with Attached Double Garage and Swimming Pool
IR Number: 6

Note: No inspections have been recorded since last inspection report was generated.

Formal Directive: The meter box is not yet installed (due to supply issue) ,to be installed as per specialized specifications. Please take photo's and or call for another inspection of this.

Inspection Summary: The specialized EZ panel is screwed with 100mm s/s screws at 300mm crs as per specification. LPB is Clark Smith.

Your next inspection will be: **Post Line**
Please contact us 48 hours before you require this to book your inspection.

Outstanding Required Documents for this Building
Prepour

- B1: Foundations - Construction monitoring records

Floor Slab

- B1: Slab - Construction monitoring records

Drainage

- E1: Stormwater drain leakage test and as-built plans
- G13: As-builts, drainlayer details, pipework test

Final

- G9: Energy works certificate
- G12: Water potability certification - Non NUO supply

History

Inspection Name	Summary
Siting and Site Scrape Inspection	-
Prepour	IN-PROGRESS - 21 Oct 2021
Pool Prepour	-
Wastepipes	PASS - 19 Oct 2021
Floor Slab	PASS - 03 Dec 2021
Framing / Pre-wrap	PASS - 03 Dec 2021
Post Wrap / Cavity	PASS
Preline	PASS - 04 Feb 2022
Post Line	-
Drainage	-
Final	-

Yours Sincerely,

Steve Corkin
Building Services Officer
On behalf of: Kaipara District Council

Notes: meter box area



Notes: side



Notes: front



Notes: side



22 February 2022

ACDL Trustee Limited
17 Pinefield Road
Whenuapai
Auckland 0618

Dear Sir or Madam,

Reference Number: BC210441
Project Location: 53 Robert Hastie Drive

Mangawhai
Legal description of land where building is located: Lot 81 DP 556753
Project Description: New Single Storey 4 Bedroom Dwelling with Attached Double Garage and Swimming Pool
IR Number: 7

Inspection Results:
SITING AND SITE SCRAPE INSPECTION - 22 Feb 2022 @ 10:17 by Greg Bellam

Inspection Outcome: **PASS** - The BCA is satisfied, on reasonable grounds, that the aspects of building work pertaining to this inspection demonstrate compliance with the building consent.

Inspection Summary: Siting and scrape inspection completed. Area for pool has been excavated as shown on consented plans. Okay to place pool. Temporary fencing on site.

Your next inspection will be: **Post Line**
Please contact us 48 hours before you require this to book your inspection.

Outstanding Required Documents for this Building
Prepour

- B1: Foundations - Construction monitoring records

Floor Slab

- B1: Slab - Construction monitoring records

Drainage

- E1: Stormwater drain leakage test and as-built plans

- G13: As-builts, drainlayer details, pipework test

Final

- G9: Energy works certificate
- G12: Water potability certification - Non NUO supply

History

Inspection Name	Summary
Siting and Site Scrape Inspection	**PASS** - 22 Feb 2022
Prepour	**IN-PROGRESS** - 21 Oct 2021
Pool Prepour	-
Wastepipes	**PASS** - 19 Oct 2021
Floor Slab	**PASS** - 03 Dec 2021
Framing / Pre-wrap	**PASS** - 03 Dec 2021
Post Wrap / Cavity	**PASS**
Preline	**PASS** - 04 Feb 2022
Post Line	-
Drainage	-
Final	-

Yours Sincerely,



Greg Bellam
Senior Building Services Officer
On behalf of: Kaipara District Council

Notes: .



14 March 2022

ACDL Trustee Limited
17 Pinefield Road
Whenuapai
Auckland 0618

Dear Sir or Madam,

Reference Number: BC210441
Project Location: 53 Robert Hastie Drive

Mangawhai
Legal description of land where building is located: Lot 81 DP 556753
Project Description: New Single Storey 4 Bedroom Dwelling with Attached Double Garage and Swimming Pool
IR Number: 8

Inspection Results:
POST LINE - 14 Mar 2022 @ 10:00 by Greg Bellam

Inspection Outcome: **PASS** - The BCA is satisfied, on reasonable grounds, that the aspects of building work pertaining to this inspection demonstrate compliance with the building consent.

Inspection Summary: Post line completed as per consented plans. Brace and standard sheets fixed to Gib specs. Aqua line to wet rooms fixed at 100mm centers. Diaphragm ceiling fixed to Gib fixing pattern. Okay to continue. Lance Vale, LBP. Membrane, next inspection.

Your next inspection will be: **Post Line**
Please contact us 48 hours before you require this to book your inspection.

Outstanding Required Documents for this Building
Prepour

- B1: Foundations - Construction monitoring records

Floor Slab

- B1: Slab - Construction monitoring records

Drainage

- E1: Stormwater drain leakage test and as-built plans
- G13: As-builts, drainlayer details, pipework test

Final

- G9: Energy works certificate
- G12: Water potability certification - Non NUO supply

History

Inspection Name	Summary
Siting and Site Scrape Inspection	**PASS** - 22 Feb 2022
Prepour	**IN-PROGRESS** - 21 Oct 2021
Pool Prepour	-
Wastepipes	**PASS** - 19 Oct 2021
Floor Slab	**PASS** - 03 Dec 2021
Framing / Pre-wrap	**PASS** - 03 Dec 2021
Post Wrap / Cavity	**PASS**
Preline	**PASS** - 04 Feb 2022
Post Line	**PASS** - 14 Mar 2022
Drainage	-
Final	-

Yours Sincerely,



Greg Bellam
Senior Building Services Officer
On behalf of: Kaipara District Council

Notes: .



Notes: .



30 March 2022

ACDL Trustee Limited
17 Pinefield Road
Whenuapai
Auckland 0618

Dear Sir or Madam,

Reference Number: BC210441
Project Location: 53 Robert Hastie Drive

Mangawhai
Legal description of land where building is located: Lot 81 DP 556753
Project Description: New Single Storey 4 Bedroom Dwelling with Attached Double Garage and Swimming Pool
IR Number: 9

Note: No inspections have been recorded since last inspection report was generated.

Inspection Summary: Membrane for bath rooms completed. Mapei membrane installed to floors and shower wall. Has been turned up wall 100mm where required. Joints have been taped with bond breakers in place. Mark Maelzer #2267. Okay to continue

Your next inspection will be: **Drainage**
Please contact us 48 hours before you require this to book your inspection.

Outstanding Required Documents for this Building
Prepour

- B1: Foundations - Construction monitoring records

Floor Slab

- B1: Slab - Construction monitoring records

Drainage

- E1: Stormwater drain leakage test and as-built plans
- G13: As-builts, drainlayer details, pipework test

Final

- G9: Energy works certificate

- G12: Water potability certification - Non NUO supply

History

Inspection Name	Summary
Siting and Site Scrape Inspection	**PASS** - 22 Feb 2022
Prepour	**IN-PROGRESS** - 21 Oct 2021
Pool Prepour	-
Wastepipes	**PASS** - 19 Oct 2021
Floor Slab	**PASS** - 03 Dec 2021
Framing / Pre-wrap	**PASS** - 03 Dec 2021
Post Wrap / Cavity	**PASS**
Preline	**PASS** - 04 Feb 2022
Post Line	**PASS** - 14 Mar 2022
Drainage	-
Final	-

Yours Sincerely,



Greg Bellam
Senior Building Services Officer
On behalf of: Kaipara District Council

Notes: floor and turn up of 100mm



Notes: shower



14 April 2022

ACDL Trustee Limited
17 Pinefield Road
Whenuapai
Auckland 0618

Dear Sir or Madam,

Reference Number: BC210441
Project Location: 53 Robert Hastie Drive

Mangawhai
Legal description of land where building is located: Lot 81 DP 556753
Project Description: New Single Storey 4 Bedroom Dwelling with Attached Double Garage and Swimming Pool
IR Number: 10

Inspection Results:
DRAINAGE - 12 Apr 2022 @ 10:59 by Greg Bellam

Inspection Outcome: INCOMPLETE - Some aspects of the building work pertaining to this inspection have yet to be checked and confirmed as complying with the building consent.

Inspection Summary: Storm and waste water completed on test. 100mm lines supported with bedding with joints primed and glued. Inspection points at junctions and exit points. Soakage trench 18mx300mmx450mm deep, wrapped in cloth. Waste water completed to tank with under ground dripper lines. Storm water completed to two water tanks with over flow to soakage. As built on site, please up load onto consent portal. Strom water has 1% fall, waste water has 2% fall. Drain layer Kirran Dheda #14099. Due to rain could not photo. Drain layer has photos will up load with as built. Okay to back fill

Your next inspection will be: **Final**
Please contact us 48 hours before you require this to book your inspection.

Outstanding Required Documents for this Building
Prepour

- B1: Foundations - Construction monitoring records

Floor Slab

- B1: Slab - Construction monitoring records

Drainage

- E1: Stormwater drain leakage test and as-built plans
- G13: As-builts, drainlayer details, pipework test

Final

- G9: Energy works certificate
- G12: Water potability certification - Non NUO supply

History

Inspection Name	Summary
Siting and Site Scrape Inspection	**PASS** - 22 Feb 2022
Prepour	**IN-PROGRESS** - 21 Oct 2021
Pool Prepour	-
Wastepipes	**PASS** - 19 Oct 2021
Floor Slab	**PASS** - 03 Dec 2021
Framing / Pre-wrap	**PASS** - 03 Dec 2021
Post Wrap / Cavity	**PASS**
Preline	**PASS** - 04 Feb 2022
Post Line	**PASS** - 14 Mar 2022
Drainage	**IN-PROGRESS** - 12 Apr 2022
Final	-

Yours Sincerely,



Greg Bellam
Senior Building Services Officer
On behalf of: Kaipara District Council

25 May 2022

ACDL Trustee Limited
17 Pinefield Road
Whenuapai
Auckland 0618

Dear Sir or Madam,

Reference Number: BC210441
Project Location: 53 Robert Hastie Drive

Mangawhai
Legal description of land where building is located: Lot 81 DP 556753
Project Description: New Single Storey 4 Bedroom Dwelling with Attached Double Garage and Swimming Pool
IR Number: 11

Note: No inspections have been recorded since last inspection report was generated.

Inspection Summary: Rang Lance who said he was not ready and will rebook when complete.

Your next inspection will be: **Final**
Please contact us 48 hours before you require this to book your inspection.

Outstanding Required Documents for this Building
Prepour

- B1: Foundations - Construction monitoring records

Floor Slab

- B1: Slab - Construction monitoring records

History

Inspection Name	Summary
Siting and Site Scrape Inspection	PASS - 22 Feb 2022
Prepour	IN-PROGRESS - 21 Oct 2021
Pool Prepour	-
Wastepipes	PASS - 19 Oct 2021
Floor Slab	PASS - 03 Dec 2021

Framing / Pre-wrap	**PASS** - 03 Dec 2021
Post Wrap / Cavity	**PASS**
Preline	**PASS** - 04 Feb 2022
Post Line	**PASS** - 14 Mar 2022
Drainage	**PASS** - 12 Apr 2022
Final	-

Yours Sincerely,

John Edwards
building control officer
On behalf of: Kaipara District Council

28 June 2022

ACDL Trustee Limited
17 Pinefield Road
Whenuapai
Auckland 0618

Dear Sir or Madam,

Reference Number: BC210441
Project Location: 53 Robert Hastie Drive

Mangawhai
Legal description of land where building is located: Lot 81 DP 556753
Project Description: New Single Storey 4 Bedroom Dwelling with Attached Double Garage and Swimming Pool
IR Number: 12

Inspection Results:
POOL PREPOUR - 28 Jun 2022 @ 17:15 by John Edwards

Inspection Outcome: PASS - The BCA is satisfied, on reasonable grounds, that the aspects of building work pertaining to this inspection demonstrate compliance with the building consent.

FINAL - 28 Jun 2022 @ 17:15 by John Edwards

Inspection Outcome: FAIL- The following aspects of this inspection have resulted in a Fail result -- see the item(s) below:

Required Docs:
1-Engineer to cover swimming pool excavation and placement with site notes as discussed with Team Leader.
2-Commissioning and maintenance statement required for the septic system.
3-Engineers site notes and PS4 required for the pod floor.
Row required for the pod floor.

Producer Statement Acceptance:
The producer statement does not provide sufficient information and evidence to demonstrate reasonable grounds for acceptance. Please review and resubmit the statement ensuring that it identifies the following:
1. Scope of Work

2. Site Address and Legal Description
3. The Building Consent Authority as the recipient
4. Author's name, qualification, registration number, professional affiliation, company name.
5. Means of Compliance and should include NZBC Clause B2 - Durability.
6. Correct references to plans or consent documents. 1-Out standing documents still to check.
1-Engineer to cover swimming pool excavation and placement with site notes as discussed with Team Leader.
2-Commissioning and maintenance statement required for the septic system.
3-Engineers site notes and PS4 required for the pod floor.
4-Row required for the pod floor.

Section 45: Consent Documents:
Please provide the following:
1-Row required for the pod floor.

Formal Directive: Please upload out standing paper work to the portal.

Site Communication: Lance Vale builder.

Inspection Summary: The house is completed and sealed , the drive is concreted with a cess pit installed , ground levels are ok at time of inspection , smoke alarms are installed.

Your next inspection will be: **No further inspection required**

Outstanding Required Documents for this Building
Prepour

- B1: Foundations - Construction monitoring records

Floor Slab

- B1: Slab - Construction monitoring records

History

Inspection Name	Summary
Siting and Site Scrape Inspection	**PASS** - 22 Feb 2022
Prepour	**PASS** - 21 Oct 2021
Pool Prepour	**PASS** - 28 Jun 2022
Wastepipes	**PASS** - 19 Oct 2021
Floor Slab	**PASS** - 03 Dec 2021
Framing / Pre-wrap	**PASS** - 03 Dec 2021

Post Wrap / Cavity	**PASS**
Preline	**PASS** - 04 Feb 2022
Post Line	**PASS** - 14 Mar 2022
Drainage	**PASS** - 12 Apr 2022
Final	**IN-PROGRESS** - 28 Jun 2022
	No further inspection required

Yours Sincerely,

John Edwards
building control officer
On behalf of: Kaipara District Council

Notes: Final - ground levels , pop up#1 28/06/22



Notes: Final - osd #2 28/06/22



Notes: Final - front of house #3 28/06/22



Notes: Final - cess pit drive#4 28/06/22



Notes: Final - vent #7 28/06/22



Notes: Final - water tanks #8 28/06/22



Notes: Final - laundry #9 28/06/22



Notes: Final - hwc lagged #10 28/06/22



Notes: Final - kitchen #11 28/06/22



Notes: Final - filters and uv#1 28/06/22



Inspection Photos Record on Project 210441

Building: Main Building
Inspection: Final
Question: Have all construction monitoring records and required documents that are required as at this point of the construction process been provided? [These may include: Location certificate; Ground bearing verification; Pipework pressure tests; As-built drawings; Warrantie...
Inspector: John Edwards
Timestamp: 2022-06-28 17:15:47
Comment: Final - ground levels , pop up#1 28/06/22



Building: Main Building
Inspection: Final
Question: Have all construction monitoring records and required documents that are required as at this point of the construction process been provided? [These may include: Location certificate; Ground bearing verification; Pipework pressure tests; As-built drawings; Warrantie...
Inspector: John Edwards
Timestamp: 2022-06-28 17:15:47
Comment: Final - osd #2 28/06/22



Building: Main Building
Inspection: Final
Question: Have all construction monitoring records and required documents that are required as at this point of the construction process been provided? [These may include: Location certificate; Ground bearing verification; Pipework pressure tests; As-built drawings; Warrantie...
Inspector: John Edwards
Timestamp: 2022-06-28 17:15:47
Comment: Final - front of house #3 28/06/22



Inspection Photos Record on Project 210441

Building: Main Building
Inspection: Final
Question: Have all construction monitoring records and required documents that are required as at this point of the construction process been provided? [These may include: Location certificate; Ground bearing verification; Pipework pressure tests; As-built drawings; Warrantie...
Inspector: John Edwards
Timestamp: 2022-06-28 17:15:47
Comment: Final - cess pit drive#4 28/06/22



Building: Main Building
Inspection: Final
Question: Have all construction monitoring records and required documents that are required as at this point of the construction process been provided? [These may include: Location certificate; Ground bearing verification; Pipework pressure tests; As-built drawings; Warrantie...
Inspector: John Edwards
Timestamp: 2022-06-28 17:15:47
Comment: Final - back flow preventer pool #5 28/06/22



Building: Main Building
Inspection: Final
Question: Have all construction monitoring records and required documents that are required as at this point of the construction process been provided? [These may include: Location certificate; Ground bearing verification; Pipework pressure tests; As-built drawings; Warrantie...
Inspector: John Edwards
Timestamp: 2022-06-28 17:15:47
Comment: Final - pool#6 28/06/22



Inspection Photos Record on Project 210441

Building: Main Building
Inspection: Final
Question: Have all construction monitoring records and required documents that are required as at this point of the construction process been provided? [These may include: Location certificate; Ground bearing verification; Pipework pressure tests; As-built drawings; Warrantie...
Inspector: John Edwards
Timestamp: 2022-06-28 17:15:47
Comment: Final - vent #7 28/06/22



Building: Main Building
Inspection: Final
Question: Have all construction monitoring records and required documents that are required as at this point of the construction process been provided? [These may include: Location certificate; Ground bearing verification; Pipework pressure tests; As-built drawings; Warrantie...
Inspector: John Edwards
Timestamp: 2022-06-28 17:15:47
Comment: Final - water tanks #8 28/06/22



Building: Main Building
Inspection: Final
Question: Have all construction monitoring records and required documents that are required as at this point of the construction process been provided? [These may include: Location certificate; Ground bearing verification; Pipework pressure tests; As-built drawings; Warrantie...
Inspector: John Edwards
Timestamp: 2022-06-28 17:15:47
Comment: Final - laundry #9 28/06/22



Inspection Photos Record on Project 210441

Building: Main Building
Inspection: Final
Question: Have all construction monitoring records and required documents that are required as at this point of the construction process been provided? [These may include: Location certificate; Ground bearing verification; Pipework pressure tests; As-built drawings; Warrantie...
Inspector: John Edwards
Timestamp: 2022-06-28 17:15:47
Comment: Final - hwc lagged #10 28/06/22



Building: Main Building
Inspection: Final
Question: Have all construction monitoring records and required documents that are required as at this point of the construction process been provided? [These may include: Location certificate; Ground bearing verification; Pipework pressure tests; As-built drawings; Warrantie...
Inspector: John Edwards
Timestamp: 2022-06-28 17:15:47
Comment: Final - kitchen #11 28/06/22



Building: Main Building
Inspection: Final
Question: Is completed construction of the personal hygiene, laundering and food preparation areas compliant?
Inspector: John Edwards
Timestamp: 2022-06-28 17:15:47
Comment: Final - filters and uv#1 28/06/22



Stud Framing as per NZS 3604:2011 Section 8 - Walls		High Wind
from Table 8.2 - Load bearing walls		
Stud height	Stud size	Stud Spacing
2.7m	90x45mm	400crs
3.0m	90x45mm	300crs
3.6m	2/90x45mm	300crs
from Table 8.4 - Non-load bearing walls		
Stud height	Stud size	Stud Spacing
2.7m	90x45mm	400crs
3.0m	90x45mm	300crs

Key/Notes

Refer to the Geotechnical Investigation reference 21076 by Wiley Geotechnical Ltd. dated 27 May 2021 for specific site preparation details, bearing depth and capacity.

A minimum 200 mm layer of compacted hard fill is recommended to be placed for a waffle slab (i.e Rib-Raft) with the foundation being designed for expansive site class 'M – Moderate', as per AS 2870. All topsoil and fill material must be removed before foundation construction commences.

Square stop to ceiling/wall junction

All structural fixings sheltered and exposed in Exposure Zone D to be Type 304 stainless steel as per NZS3604:2011

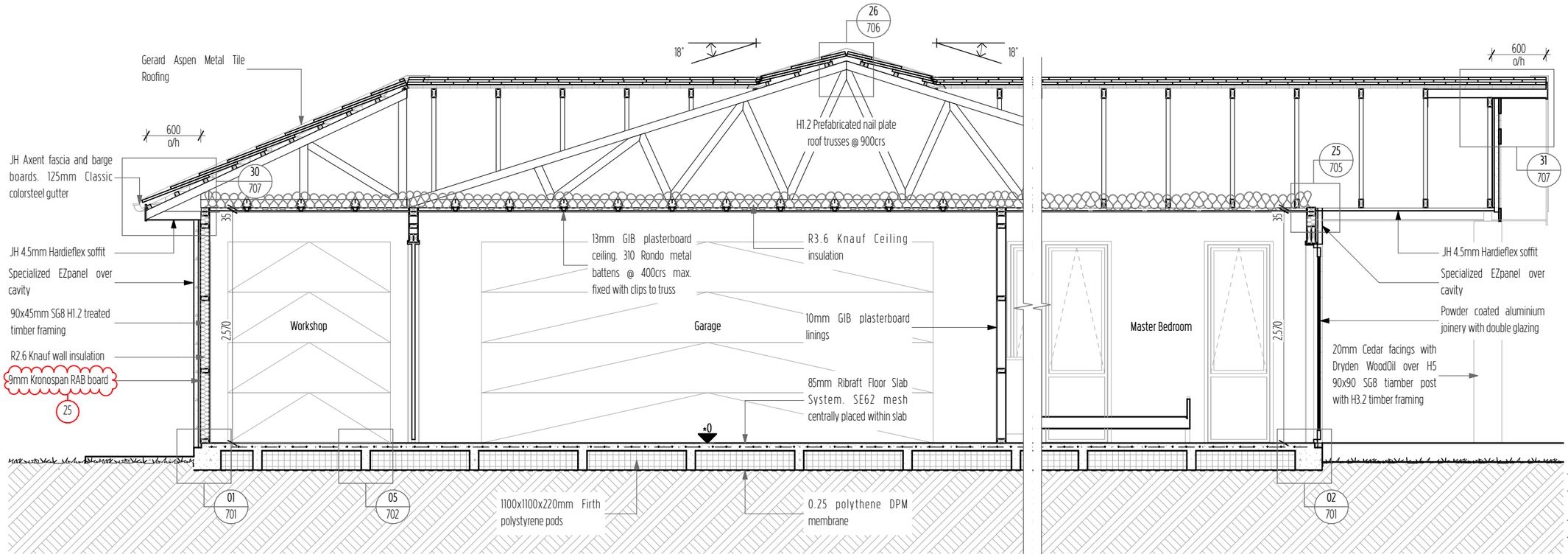

B
201, 504

Cross Section B-B

Scale 1:50

COASTAL HOMES

Project Title

ACDL Trustee Ltd. D&L Kendall

Site Address

Lot 81 The Sanctuary, Mangawhai

Drawing Issue

Building Consent

Sheet Title

Cross Sections

Scale	Drawn
1:50 @ A3	Marc R. Vale
Date	Checked
15/11/21	CADetailer Ltd.
Drawing no.	Revision
402	06

All dimensions to be verified on site before commencing any work or producing shop drawings. Do not scale.
The copyright of this drawing remains with CH Northland Ltd and CADetailer Ltd.

RevID	ChID	Change Name	Date
03	10	Cedar coating	19/08/21
04	22	Mower garage door moved	19/10/21
05	24	Post Confirmation	6/11/21
06	25	RAB board change	15/11/21

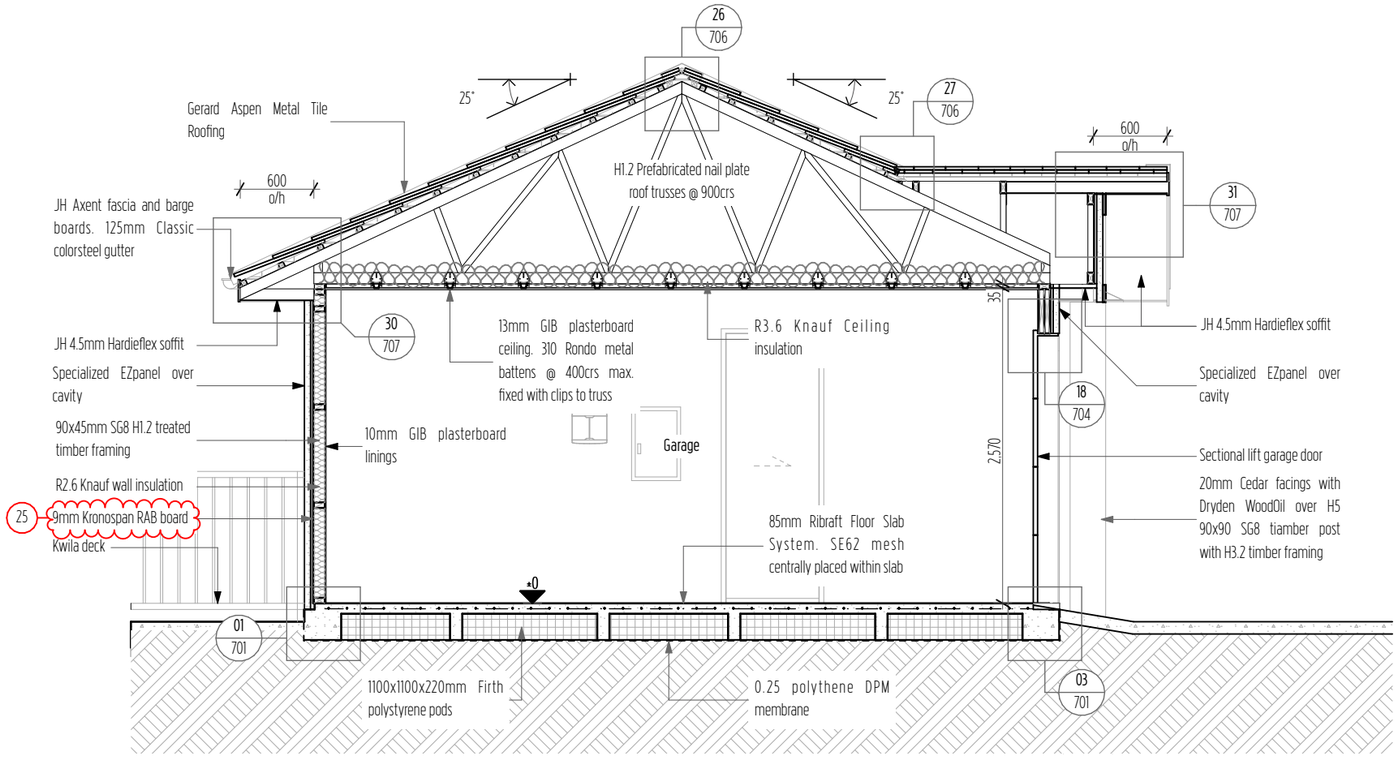

C
201, 504

Cross Section C-C

Scale 1:50

Key/Notes

Refer to the Geotechnical Investigation reference 21076 by Wiley Geotechnical Ltd. dated 27 May 2021 for specific site preparation details, bearing depth and capacity.

A minimum 200 mm layer of compacted hard fill is recommended to be placed for a waffle slab (i.e Rib-Raft) with the foundation being designed for expansive site class 'M – Moderate', as per AS 2870. All topsoil and fill material must be removed before foundation construction commences.

Square stop to ceiling/wall junction

All structural fixings sheltered and exposed in Exposure Zone D to be Type 304 stainless steel as per NZS3604:2011

Stud Framing as per NZS 3604:2011
Section 8 - Walls — High Wind

from Table 8.2 - Load bearing walls

Stud height	Stud size	Stud Spacing
2.7m	90x45mm	400crs
3.0m	90x45mm	300crs
3.6m	2/90x45mm	300crs

from Table 8.4 - Non-load bearing walls

Stud height	Stud size	Stud Spacing
2.7m	90x45mm	400crs
3.0m	90x45mm	300crs

COASTAL HOMES

Project Title
ACDL Trustee Ltd. D&L Kendall

Site Address
Lot 81 The Sanctuary, Mangawhai

Drawing Issue
Building Consent

Sheet Title
Cross Sections

Scale	Drawn
1:50 @ A3	Marc R. Vale
Date	Checked
15/11/21	CADetailer Ltd.
Drawing no.	Revision
403	05

All dimensions to be verified on site before commencing any work or producing shop drawings. Do not scale.
The copyright of this drawing remains with CH Northland Ltd and CADetailer Ltd.

RevID	ChID	Change Name	Date
02	01	Building Consent	27/06/21
03	10	Cedar coating	18/08/21
04	24	Post Confirmation	6/11/21
05	25	RAB board change	15/11/21

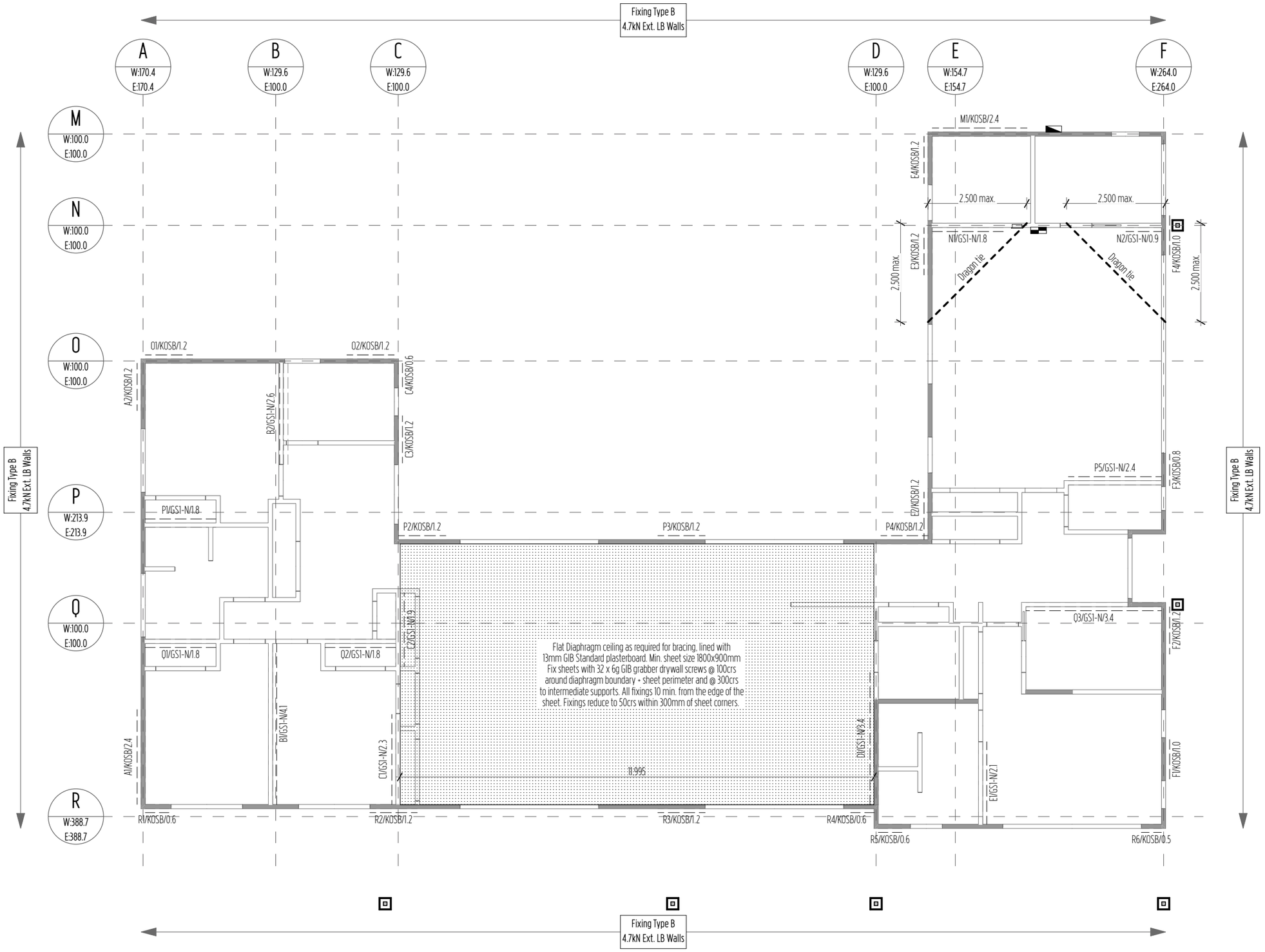

Key/Notes

Load-bearing wall

Non-Load bearing wall

Stud to Top Plate fixing as per MiTek Structural fixings on-site Guide page 88 as an alternative to NZS3604:2011 table 8.18

Lintel fixing as per MiTek Structural fixings on-site Guide page 73 as an alternative to NZS3604:2011 table 8.14 & figure 8.12

All bracing elements shall be installed and fixed as per the manufacturers recommendations.

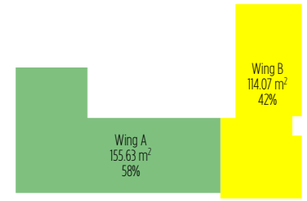

Bracing Wing Key

Bracing Wings representing % of overall building as per GIB Bracing Supplement Document Issue Date December 2016.

Wing A - 58% of Demand
Wing Along = 988 x 58% = 573.04BU's - 1312BU's achieved ✓
Wing Across = 1530 x 58% = 887.40BU's - 1596BU's achieved ✓
Earthquake Along & Across = 807 x 58% = 468.06BU's - 1164 & 1389BU's achieved ✓

Wing B - 42% of Demand
Wing Along = 988 x 42% = 414.96BU's - 1086BU's achieved ✓
Wing Across = 1530 x 42% = 642.60BU's - 941BU's achieved ✓
Earthquake Along & Across = 807 x 42% = 338.94BU's - 858 & 882BU's achieved ✓

25

COASTAL HOMES

Project Title
ACDL Trustee Ltd. D&L Kendall

Site Address
Lot 81 The Sanctuary, Mangawhai

Drawing Issue
Building Consent

Sheet Title
Bracing + Fixing Plan

Scale	Drawn
1:100 @ A3	Marc R. Vale
Date	Checked
15/11/21	CADetailer Ltd.
Drawing no.	Revision
503	06

All dimensions to be verified on site before commencing any work or producing shop drawings. Do not scale.
The copyright of this drawing remains with CH Northland Ltd and CADetailer Ltd.

RevID	ChID	Change Name	Date
03	12	Bracing Wing percentages	18/08/21
04	21	Lounge wall moved closer	25/08/21
05	22	Mower garage door moved	19/10/21
06	25	RAB board change	15/11/21

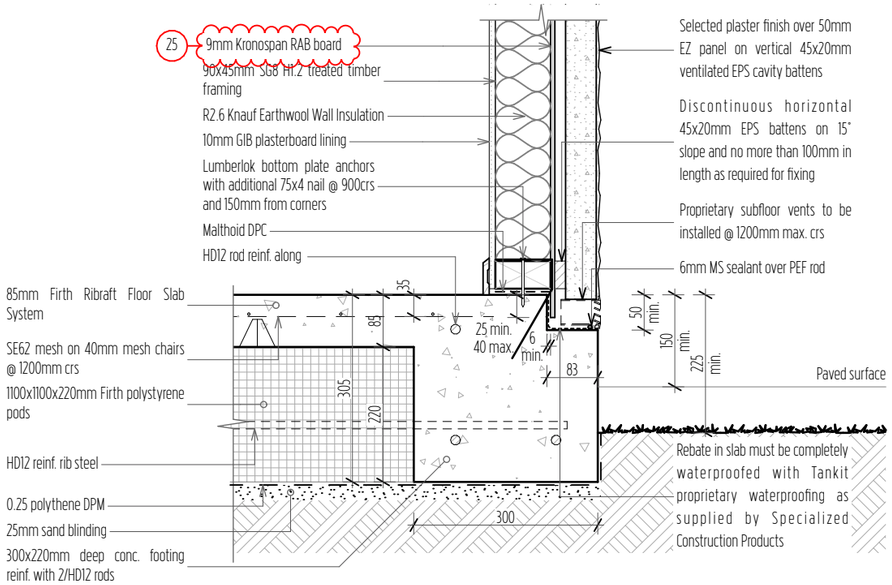

01 Ribraft Edge Beam - EZpanel

Scale 1:10

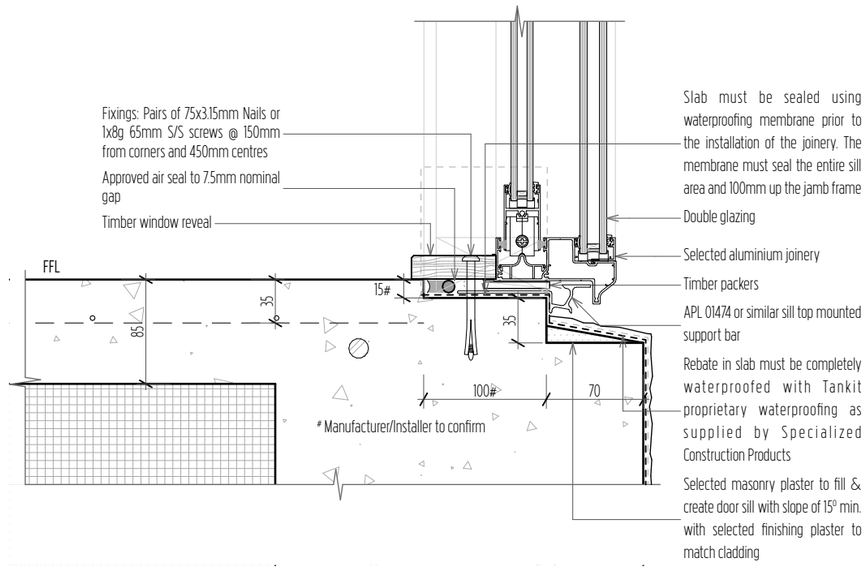

02 Joinery Sill Rebate - EZpanel

Scale 1:5

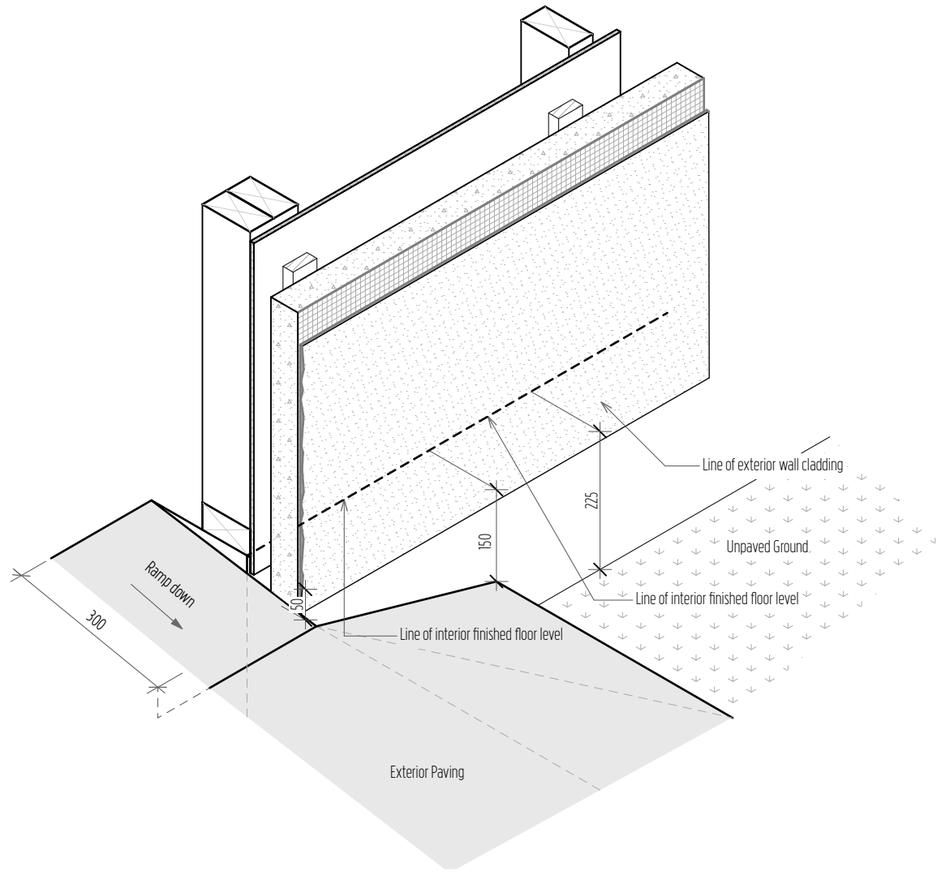

03 Garage Door Threshold - EZpanel

Scale 1:10

Key/Notes

Refer to the Geotechnical Investigation reference 21076 by Wiley Geotechnical Ltd. dated 27 May 2021 for specific site preparation details, bearing depth and capacity.

A minimum 200 mm layer of compacted hard fill is recommended to be placed for a waffle slab (i.e Rib-Raft) with the foundation being designed for expansive site class 'M – Moderate', as per AS 2870. All topsoil and fill material must be removed before foundation construction commences.

COASTAL HOMES

Project Title

ACDL Trustee Ltd. D&L Kendall

Site Address

Lot 81 The Sanctuary, Mangawhai

Drawing Issue

Building Consent

Sheet Title

Details - Foundation

Scale	Drawn
1:10, 1:5 @ A3	Marc R. Vale
Date	Checked
15/11/21	CADetailer Ltd.
Drawing no.	Revision
701	04

All dimensions to be verified on site before commencing any work or producing shop drawings. Do not scale.
The copyright of this drawing remains with CH Northland Ltd and CADetailer Ltd.

RevID	ChID	Change Name	Date
01			27/06/21
02	18	Joinery Sill update	25/08/21
03	23	Insulation Confirmation	6/11/21
04	25	RAB board change	15/11/21

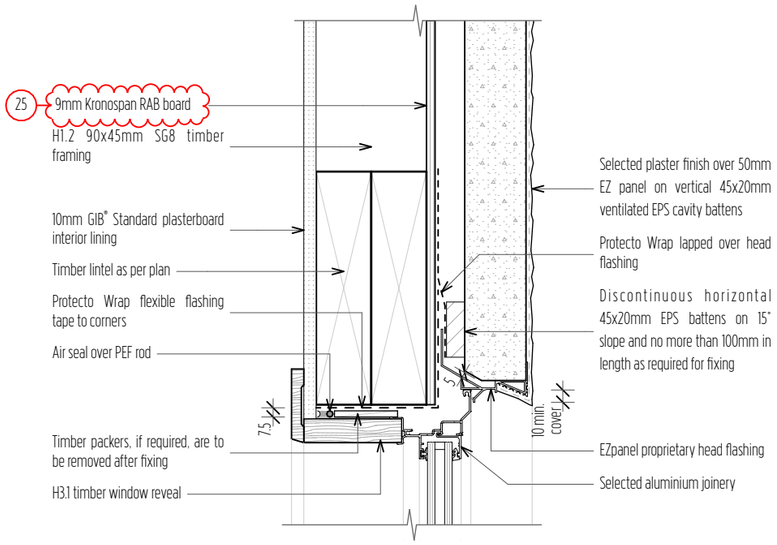

15 Window Head - EZpanel

Scale 1:5

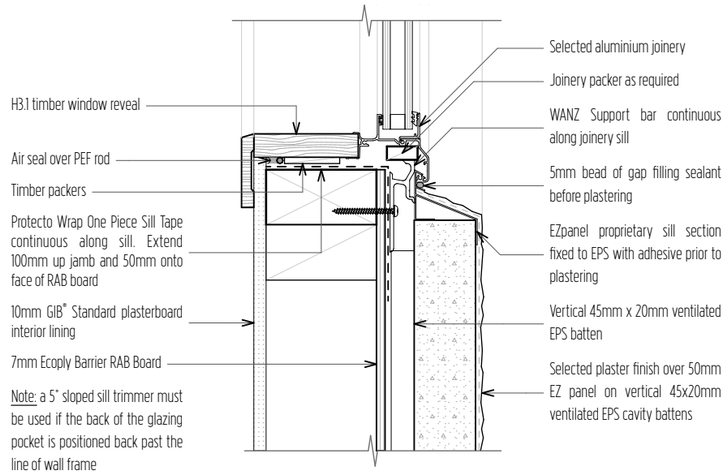

16 Window Sill - EZpanel

Scale 1:5

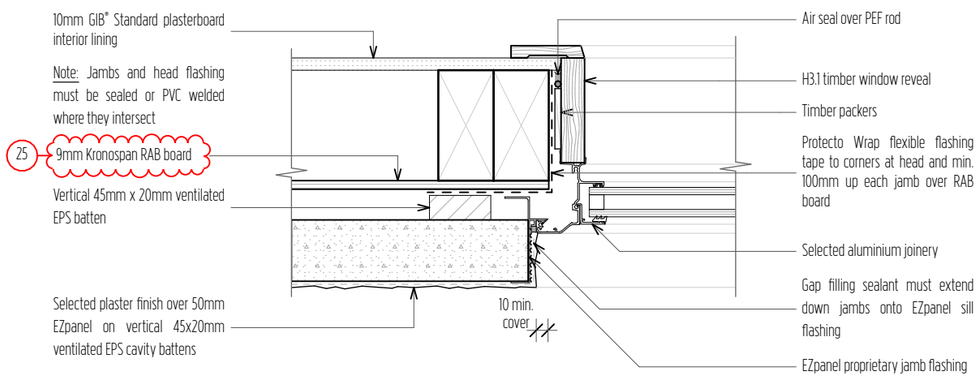

17 Window Jamb - EZpanel

Scale 1:5

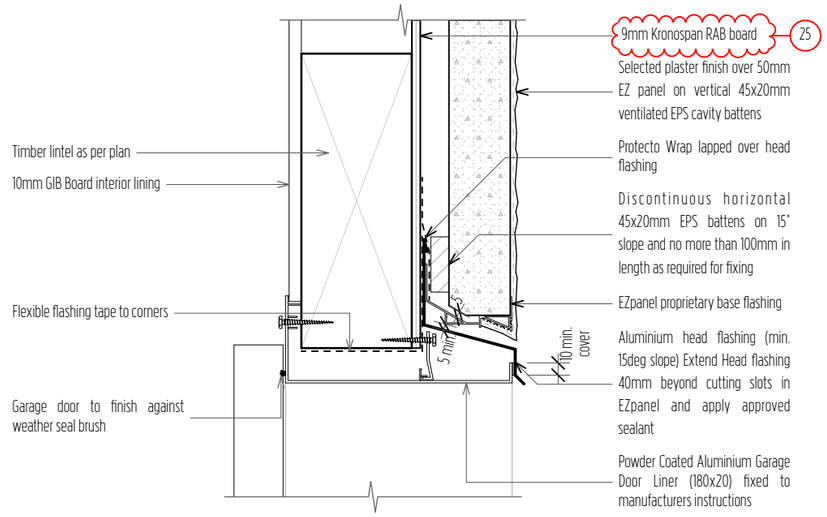

18 Garage Door Head - EZpanel

Scale 1:5

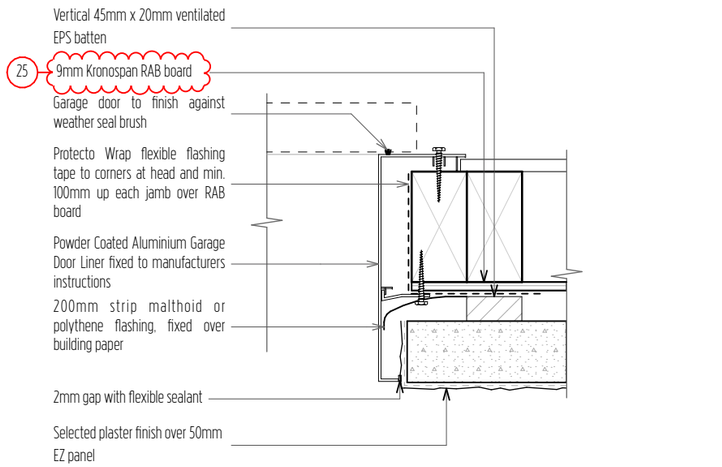

19 Garage Door Jamb - EZpanel

Scale 1:5

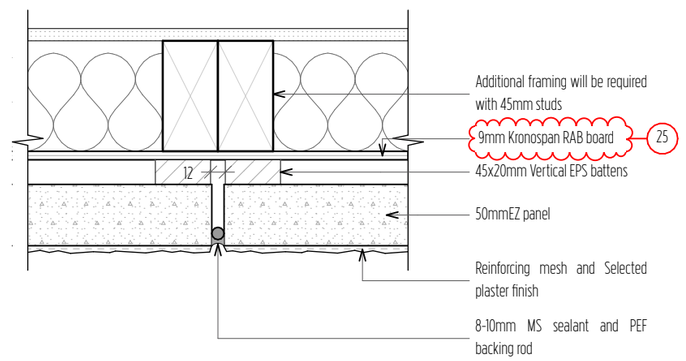

20 Vertical Control Joint - EZpanel

Scale 1:5

COASTAL HOMES

Project Title

ACDL Trustee Ltd. D&L Kendall

Site Address

Lot 81 The Sanctuary, Mangawhai

Drawing Issue

Building Consent

Sheet Title

Details - Cladding

Scale	Drawn
1:5 @ A3	Marc R. Vale
Date	Checked
15/11/21	CADetailer Ltd.
Drawing no.	Revision
704	02

All dimensions to be verified on site before commencing any work or producing shop drawings. Do not scale.
The copyright of this drawing remains with CH Northland Ltd and CADetailer Ltd.

RevID	ChID	Change Name	Date
01			27/06/21
02	25	RAB board change	15/11/21

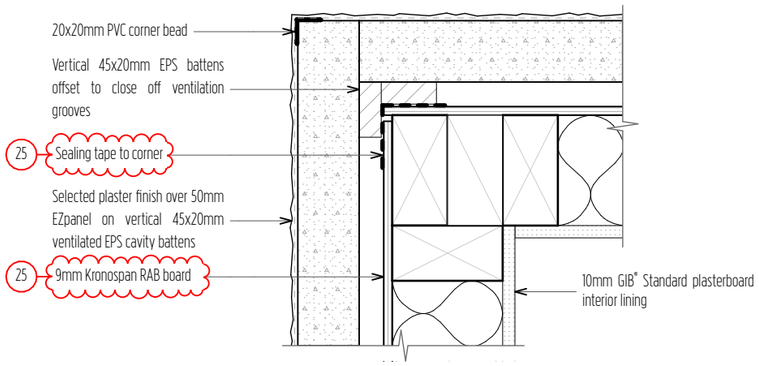

21 External Corner - EZpanel

Scale 1:5

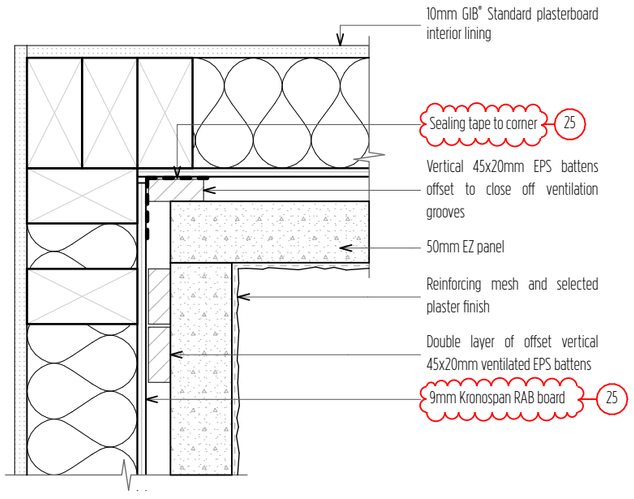

22 Internal Corner - EZpanel

Scale 1:5

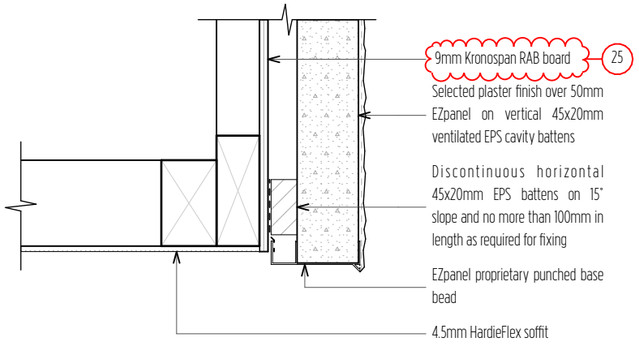

25 Soffit Overhang - EZpanel

Scale 1:5

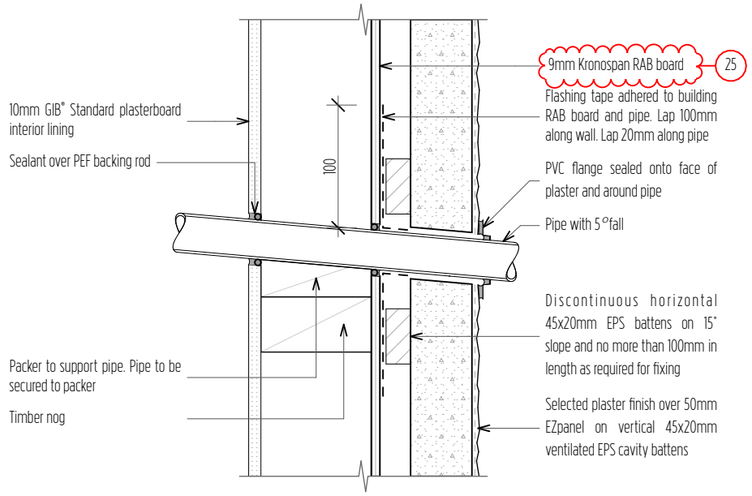

23 Pipe Penetration - EZpanel

Scale 1:5

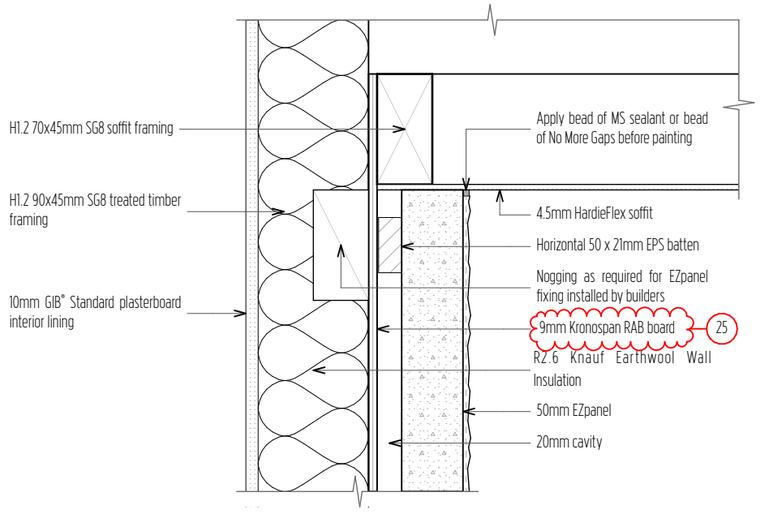

24 Flat Soffit Junction - EZpanel

Scale 1:5

COASTAL HOMES

Project Title

ACDL Trustee Ltd. D&L Kendall

Site Address

Lot 81 The Sanctuary, Mangawhai

Drawing Issue

Building Consent

Sheet Title

Details - Cladding

Scale	Drawn
1:5 @ A3	Marc R. Vale
Date	Checked
15/11/21	CADetailer Ltd.
Drawing no.	Revision
705	03

All dimensions to be verified on site before commencing any work or producing shop drawings. Do not scale.
The copyright of this drawing remains with CH Northland Ltd and CADetailer Ltd.

RevID	ChID	Change Name	Date
01			27/06/21
02	23	Insulation Confirmation	6/11/21
03	25	RAB board change	15/11/21

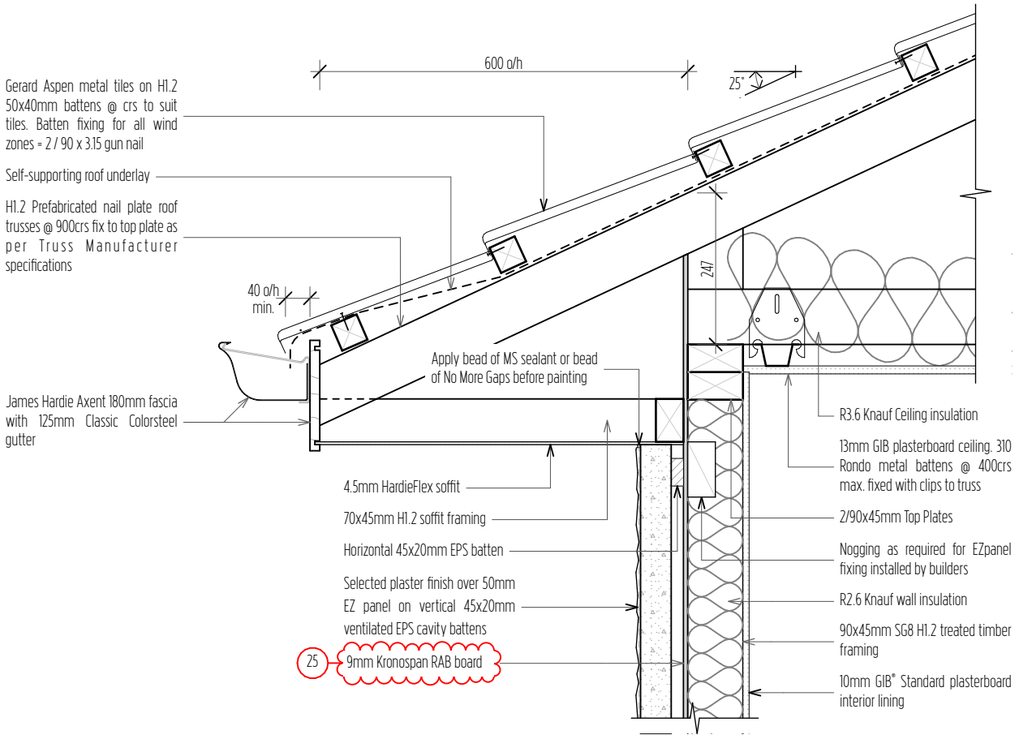

30 25deg. Metal Tile Heeled Eave - EZpanel

Scale 1:10

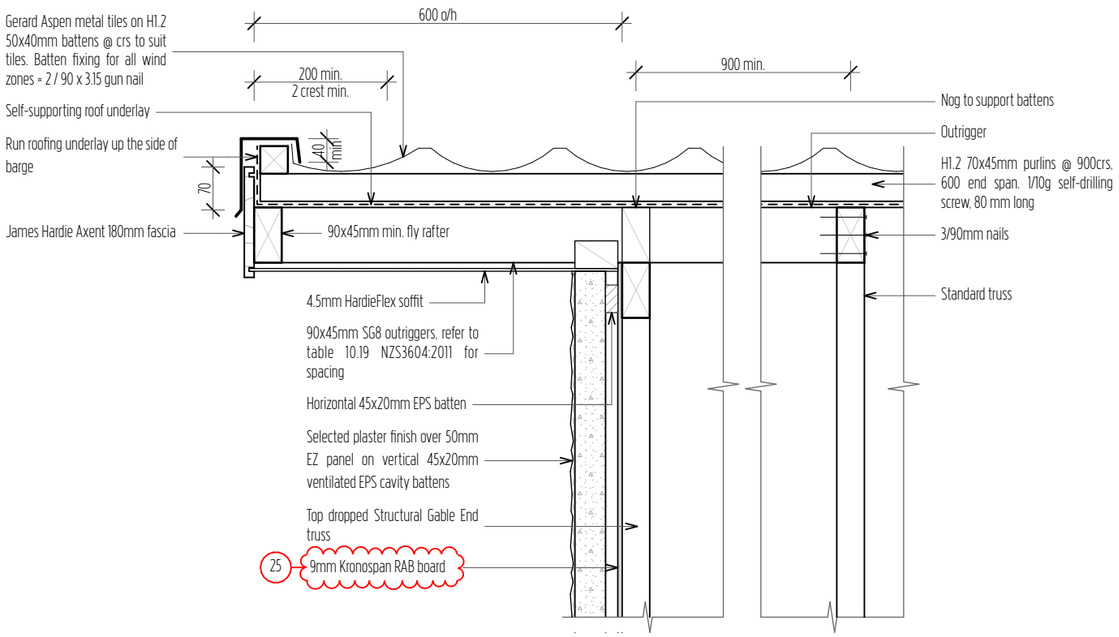

31 Metal Tile Truss Barge - EZpanel

Scale 1:10

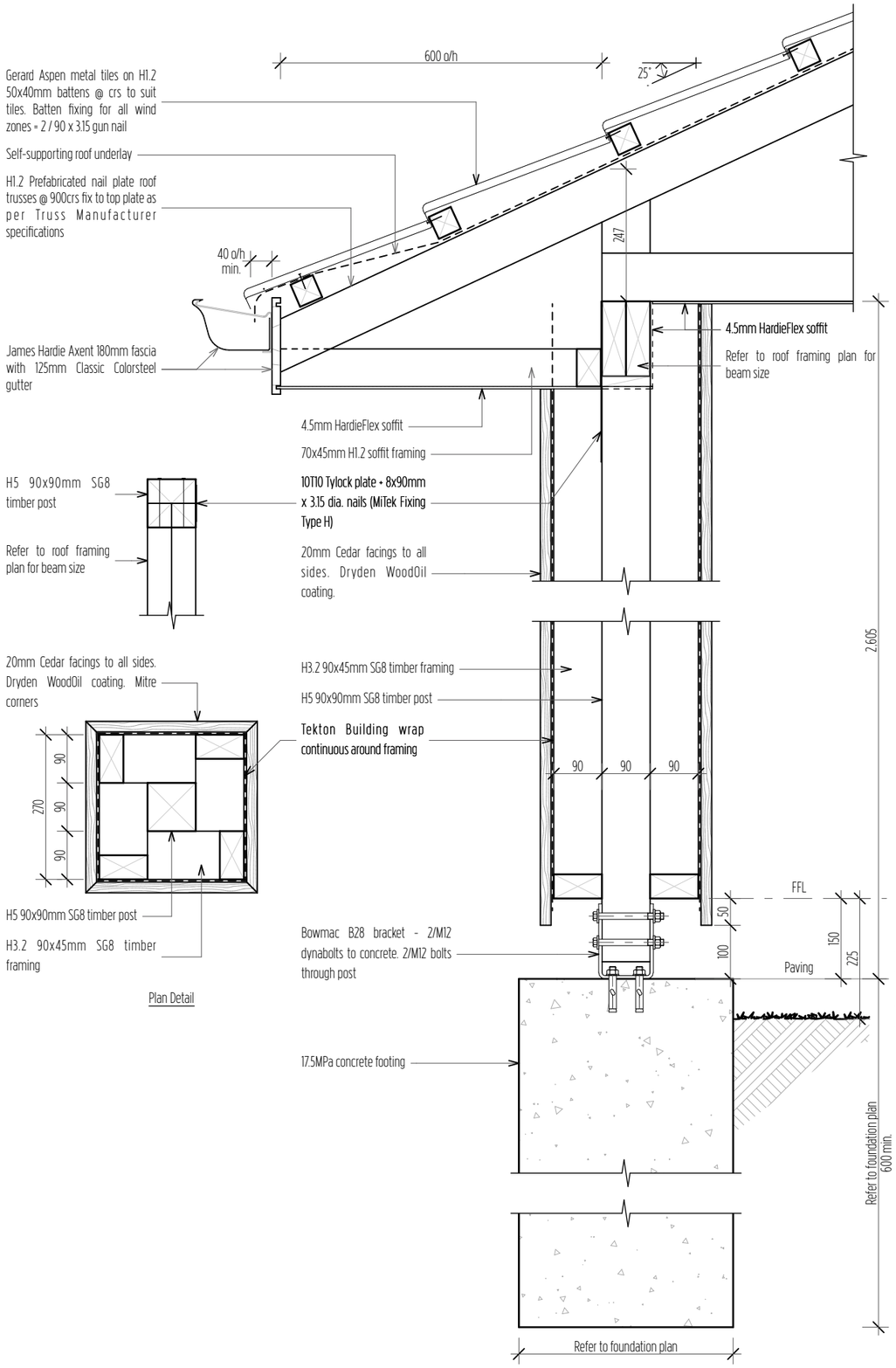

32 25deg. Metal Tile Alfresco Eave - EZpanel

Scale 1:10

COASTAL HOMES

Project Title

ACDL Trustee Ltd. D&L Kendall

Site Address

Lot 81 The Sanctuary, Mangawhai

Drawing Issue

Building Consent

Sheet Title

Details - Roofing

Scale	Drawn
1:10 @ A3	Marc R. Vale
Date	Checked
15/11/21	CADetailer Ltd.
Drawing no.	Revision
707	04

All dimensions to be verified on site before commencing any work or producing shop drawings. Do not scale.
The copyright of this drawing remains with CH Northland Ltd and CADetailer Ltd.

RevID	ChID	Change Name	Date
02	10	Cedar coating	18/08/21
	17	Post footings	
03	19	Post uplift	25/08/21
04	25	RAB board change	15/11/21

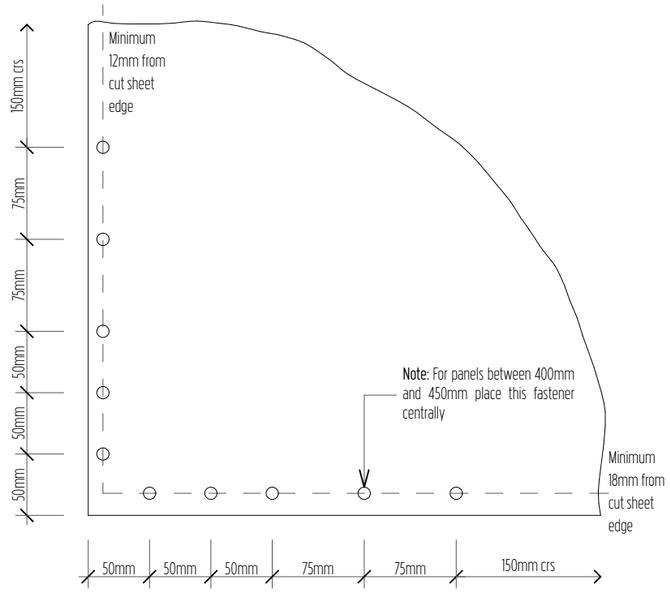

Unless stated all fastener spacings are maximums.

38 Corner Fastener Pattern

Scale 1:5

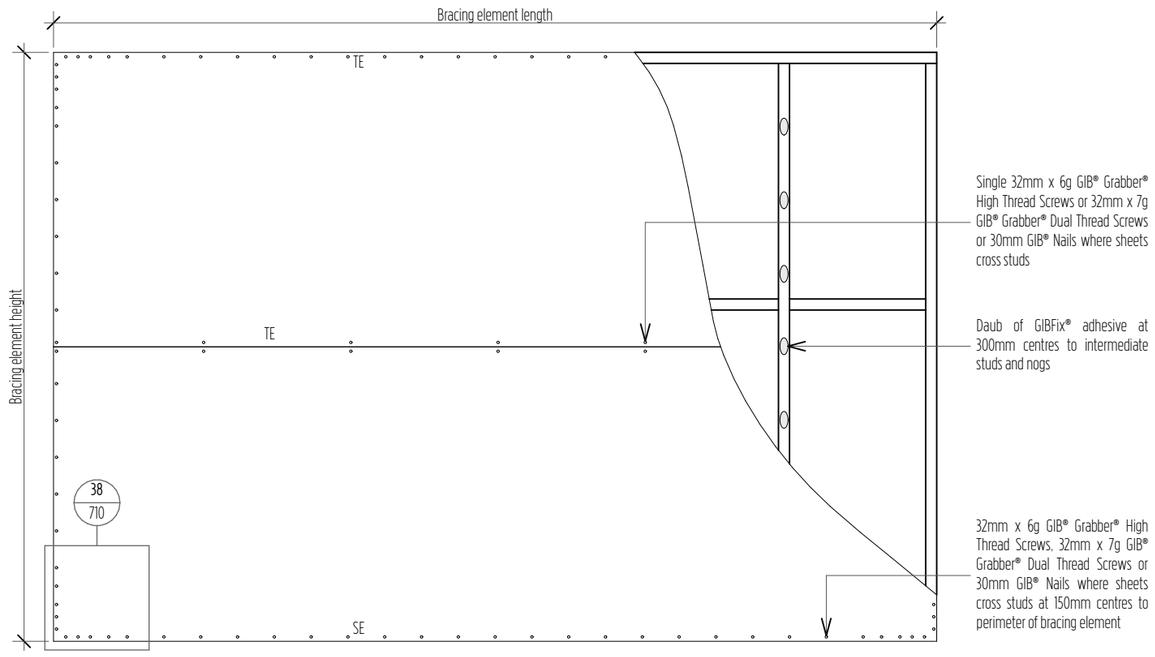

Specification code	Minimum length (m)	Lining requirement
GS1-N	0.4	Any 10mm or 13mm GIB® Standard plasterboard to one side only

39 GS1-N Horizontal Fixing

Scale 1:25

Key/Notes

TE Tapered Edge

SE Square Edge

25 Refer to Kronospan Documentation for bracing details

COASTAL HOMES

Project Title

ACDL Trustee Ltd. D&L Kendall

Site Address

Lot 81 The Sanctuary, Mangawhai

Drawing Issue

Building Consent

Sheet Title

Details - Bracing

Scale	Drawn
1:5, 1:25 @ A3	Marc R. Vale
Date	Checked
15/11/21	CADetailer Ltd.
Drawing no.	Revision
710	02

All dimensions to be verified on site before commencing any work or producing shop drawings. Do not scale.
The copyright of this drawing remains with CH Northland Ltd and CADetailer Ltd.

RevID	ChID	Change Name	Date
01			27/06/21
02	25	RAB board change	15/11/21

25

BRACING CALCULATIONS

TABLE: Default

Location of Storey	Single	Wind Zone	High
Room in Roof Space	No	Earthquake Zone	1
Building Width (BW)	17.6m	Soil Class	E - Very Soft
Building Length (BL)	25.9m		
Gross Floor Area (GFA)	269.69m²	W along	55.0BU/m
Floor Height to Apex	5m	W along x BW	968.0BU
Roof Height Above Eaves	3m	W across	60.0BU/m
Roof Pitch	0 - 25°	W across x BL	1,554.6BU
Roof Style	Gable		
Double Top Plate	Yes	EQ	3.0BU/m²
Floor Load	2kPa	EQ x GFA	809.1BU
Cladding Weights:			
- Subfloor	Concrete Floor		
- Wall	Medium		
- Roof	Light	Calculations based on NZS3604:2011	

BRACING ALONG

Required			Provided							Achieved	
Line	W BU	EQ BU	Brace	Type	W BU/m	EQ BU/m	Length m	Height m	Angle	W BU	EQ BU
M	100.0	100.0	M-1	KOSB	123.0	107.0	2.4	2.6	-	277.8	241.7
										277.8	241.7
N	100.0	100.0	N-1	GS1-N	70.0	60.0	1.8	2.6	-	126.0	108.0
			N-2	GS1-N	50.0	55.0	0.9	2.6	-	45.0	49.5
										171.0	157.5
O	100.0	100.0	O-1	KOSB	123.0	107.0	1.2	2.6	-	138.9	120.8
			O-2	KOSB	123.0	107.0	1.2	2.6	-	138.9	120.8
										277.8	241.7
P	213.9	213.9	P-1	GS1-N	70.0	60.0	1.8	2.6	-	125.3	107.4
			P-2	KOSB	123.0	107.0	1.2	2.6	-	138.9	120.8
			P-3	KOSB	123.0	107.0	1.2	2.6	-	138.9	120.8
			P-4	KOSB	123.0	107.0	1.2	2.6	-	138.9	120.8
			P-5	GS1-N	70.0	60.0	2.4	2.6	-	164.9	141.3
										706.9	611.2
Q	100.0	100.0	Q-1	GS1-N	70.0	60.0	1.8	2.6	-	125.3	107.4
			Q-2	GS1-N	70.0	60.0	1.8	2.6	-	125.3	107.4
			Q-3	GS1-N	70.0	60.0	3.4	2.6	-	240.1	205.8
										490.7	420.6
R	388.7	388.7	R-1	KOSB	91.0	104.0	0.6	2.6	-	51.4	58.7
			R-2	KOSB	123.0	107.0	1.2	2.6	-	138.9	120.8
			R-3	KOSB	123.0	107.0	1.2	2.6	-	138.9	120.8
			R-4	KOSB	91.0	104.0	0.6	2.6	-	51.4	58.7
			R-5	KOSB	91.0	104.0	0.6	2.6	-	51.4	58.7
			R-6	KOSB	89.0	111.0	0.5	2.6	-	42.7	53.3
										474.7	471.2
			Total						Achieved	2,399.0	2,143.9
									Required	968.0	809.1

BRACING ACROSS

Required			Provided							Achieved	
Line	W BU	EQ BU	Brace	Type	W BU/m	EQ BU/m	Length m	Height m	Angle	W BU	EQ BU
A	170.4	170.4	A-1	KOSB	123.0	107.0	2.4	2.6	-	277.8	241.7
			A-2	KOSB	123.0	107.0	1.2	2.6	-	138.9	120.8
										416.8	362.5
B	129.6	100.0	B-1	GS1-N	70.0	60.0	4.1	2.6	-	284.9	244.2
			B-2	GS1-N	70.0	60.0	2.6	2.6	-	179.3	153.7
										464.2	397.9
C	129.6	100.0	C-1	GS1-N	70.0	60.0	2.3	2.6	-	159.5	136.7
			C-2	GS1-N	70.0	60.0	1.9	2.6	-	130.6	111.9
			C-3	KOSB	123.0	107.0	1.2	2.6	-	138.9	120.8
			C-4	KOSB	91.0	104.0	0.6	2.6	-	51.4	58.7
										480.4	428.2
D	129.6	100.0	D-1	GS1-N	70.0	60.0	3.4	2.6	-	234.6	201.1
										234.6	201.1
E	154.7	154.7	E-1	GS1-N	70.0	60.0	2.1	2.6	-	146.1	125.2
			E-2	KOSB	123.0	107.0	1.2	2.6	-	138.9	120.8
			E-3	KOSB	123.0	107.0	1.2	2.6	-	138.9	120.8
			E-4	KOSB	123.0	107.0	1.2	2.6	-	138.9	120.8
										562.8	487.8
F	264.0	264.0	F-1	KOSB	91.0	104.0	1.0	2.6	-	85.6	97.9
			F-2	KOSB	123.0	107.0	1.2	2.6	-	138.9	120.8
			F-3	KOSB	91.0	104.0	0.8	2.6	-	68.5	78.3
			F-4	KOSB	91.0	104.0	1.0	2.6	-	85.2	97.4
										378.3	394.4
			Total						Achieved	2,537.1	2,271.9
									Required	1,554.6	809.1

COASTAL HOMES

Project Title

ACDL Trustee Ltd. D&L Kendall

Site Address

Lot 81 The Sanctuary, Mangawhai

Drawing Issue

Building Consent

Sheet Title

Bracing Calculations

Scale	Drawn
N/A	Marc R. Vale
Date	Checked
15/11/21	CADetailer Ltd.
Drawing no.	Revision
803	03

All dimensions to be verified on site before commencing any work or producing shop drawings. Do not scale.
The copyright of this drawing remains with CH Northland Ltd and CADetailer Ltd.

RevID	ChID	Change Name	Date
01			14/05/21
02	01	Building Consent	27/06/21
03	25	RAB board change	15/11/21

PRODUCT CERTIFICATE

Kronospan OSB Barrier

CERTIFICATE NO: CM70096
Date of issue: 24 March 2021

1 CERTIFICATE HOLDER DETAILS

GlobalBuild.NZ
Interior Installations Limited
PO Box 36-150
Northcote, Auckland 0627
New Zealand

Email: interior.install@xtra.co.nz
Ph: +64 2148 7007
www.globalbuild.nz

GLOBALBUILD.NZ

2 PRODUCT CERTIFICATION BODY

Bureau Veritas Australia Pty Ltd
3/435 Williamstown Road
Port Melbourne VIC 3207
Australia

Ph: 1800 855 190
www.bureauveritas.com.au
Bureau Veritas Australia Pty Ltd

The complaints process for this certificate can be found here:
www.bureauveritas.com.au/your-feedback

KEY INFORMATION

3 SUMMARY OF DESCRIPTION OF BUILDING METHOD OR PRODUCT

Kronospan OSB Barrier is a 9 mm oriented strand board (OSB) panel product. Panels are available in sizes: 2400 x 1200mm, 2700 x 1200 mm, 2440 x 1220 mm and 2740 x 1220 mm. It is available untreated or treated to hazard class H3.1 (LOSP). The treated version is identifiable by green edge colour and identifying stamp.

Continuation of description can be found in item 9. Supporting Information about Description of Building Product or Method.
Matters that should be taken into account in the use or application of the building method or product can be found in item 6. Conditions and Limitations of Use.

4 SUMMARY OF INTENDED USE OF BUILDING METHOD OR PRODUCT

For use as a protected external wall bracing element and as a rigid air barrier in conjunction with a ventilated cavity.

Continuation of intended use can be found in item 8. Supporting Information about Intended use of Building Product or Method.

5 BUILDING CODE PROVISIONS

The performance clauses of the New Zealand Building Code that are relevant to the intended use and with which the building method or product complies or contributes to (where used as part of a system).

B1 Structure: B1.3.1, B1.3.2, B 1.3.3 (a, f, h) B1.3.4
B2 Durability: B2.3.1(a)
E2 External moisture: E2.3.2 (contributes to), E2.3.5 (contributes to), E2.3.7
F2 Hazardous building materials: F2.3.1

How the building method or product complies or contributes can be found in item 12. Basis for Certification. Any qualifications on the extent of that compliance can be found in item 6. Conditions and limitations of use.

This certificate is issued by an independent certification body accredited by JAS-ANZ, the product certification accreditation body appointed by the Chief Executive of the Ministry of Business, Innovation and Employment under the Building Act 2004.
The Ministry does not in any way warrant, guarantee, or represent that the building method or product that is the subject of this certificate conforms with the New Zealand Building Code, nor accept any liability arising out of the use of the building method or product.
The Ministry disclaims to the extent permitted by law, all liability (including negligence) for claims of losses, expenses, damages, and costs arising as a result of the use of the building method(s) or product(s) referred to in this certificate.

This certificate may only be reproduced in its entirety. It is advised to check that this certificate is currently valid and not withdrawn or suspended by referring to the Register of Product Certificates on the Building Performance website http://www.building.govt.nz.

PRODUCT CERTIFICATE

Kronospan OSB Barrier

6 CONDITIONS AND LIMITATIONS OF USE

1. Kronospan OSB Barrier is certified for use in timber framed buildings:
   a) designed in accordance with accordance with NZS3604:2011, or by specific design in accordance with Verification Method B1/VM1, and
   b) up to 10m in height, and
   c) located in wind zones up to and including EXTRA HIGH (as defined in NZS3604:2011) or up to a ULS wind design pressure of 2.6 kPa for buildings specifically designed in accordance with Verification Method B1/VM1, and
   d) located in all exposure zones (as defined in NZS3604:2011), and
   e) located in all seismic zones, and
   f) located greater than 1 m from a relevant boundary.
2. Kronospan OSB Barrier shall be installed in accordance with the GlobalBuild NZ OSB Barrier Design & Install Guide Version 1.3, February 2021
3. Where Kronospan OSB Barrier is installed on the external face of external wall framing the construction shall incorporate a flexible wall underlay and flashing tapes with a drained and ventilated cavity all complying with the requirements of E2/AS1.
4. The flexible underlay shall be installed within 14 days of the Kronospan OSB Barrier being installed (30 days for H3.1 treated Kronospan OSB Barrier).

NOTE: Together, items 3, 4, 5 and 6 define scope of use.

7 HEALTH AND SAFETY INFORMATION

The compliance with any manufacturer's installation instructions, maintenance, OH & S statements, MSDS's and other Health and Safety declarations will provide the necessary Health and Safety Information pertaining to the product.

8 SIGNATURES

Sam Guindi
Product Certification Manager

For and on behalf of
Bureau Veritas Australia Pty Ltd

Brad Smith
Director

For and on behalf of
GlobalBuild.NZ
Interior Installations Limited

This certificate is issued by an independent certification body accredited by JAS-ANZ, the product certification accreditation body appointed by the Chief Executive of the Ministry of Business, Innovation and Employment under the Building Act 2004.
The Ministry does not in any way warrant, guarantee, or represent that the building method or product that is the subject of this certificate conforms with the New Zealand Building Code, nor accept any liability arising out of the use of the building method or product.
The Ministry disclaims to the extent permitted by law, all liability (including negligence) for claims of losses, expenses, damages, and costs arising as a result of the use of the building method(s) or product(s) referred to in this certificate.

This certificate may only be reproduced in its entirety. It is advised to check that this certificate is currently valid and not withdrawn or suspended by referring to the Register of Product Certificates on the Building Performance website http://www.building.govt.nz.

PRODUCT CERTIFICATE

Kronospan OSB Barrier

SCHEDULE: INFORMATION THAT SUPPORTS KEY INFORMATION

9 SUPPORTING INFORMATION ABOUT DESCRIPTION

Further details regarding the description of the product can be found in GlobalBuild NZ OSB Barrier Design & Install Guide Version 1.3, February 2021.

10 SUPPORTING INFORMATION ABOUT INTENDED USE

Further details regarding the use of the product can be found in GlobalBuild NZ OSB Barrier Design & Install Guide Version 1.3, February 2021.

11 SUPPORTING INFORMATION ABOUT CONDITIONS AND LIMITATIONS OF USE

N/A

This certificate is issued by an independent certification body accredited by JAS-ANZ, the product certification accreditation body appointed by the Chief Executive of the Ministry of Business, Innovation and Employment under the Building Act 2004.
The Ministry does not in any way warrant, guarantee, or represent that the building method or product that is the subject of this certificate conforms with the New Zealand Building Code, nor accept any liability arising out of the use of the building method or product.
The Ministry disclaims to the extent permitted by law, all liability (including negligence) for claims of losses, expenses, damages, and costs arising as a result of the use of the building method(s) or product(s) referred to in this certificate.

This certificate may only be reproduced in its entirety. It is advised to check that this certificate is currently valid and not withdrawn or suspended by referring to the Register of Product Certificates on the Building Performance website http://www.building.govt.nz.
CERTIFICATE V1.3

PRODUCT CERTIFICATE

Kronospan OSB Barrier

12 BASIS FOR CERTIFICATION

B1 Structure - By testing and comparison with Acceptable Solution B1/AS1
B2 Durability - By analysis and comparison with Verification Method B2/VM1
E2 External moisture - By analysis and comparison with Acceptable Solution E2/AS1
F2 Hazardous building materials - By testing and comparison with performance requirements of Building Code clause F2.3.1

13 SUPPORTING DOCUMENTATION FOR CERTIFICATION

1. Acceptable Solutions and Verification Methods for New Zealand Building Code Clause B1 Structure 1st Edition (Amendment 19), 28 November 2019
2. Acceptable Solutions and Verification Methods For New Zealand Building Code Clause B2 Durability (Amendment 12), 28 November 2019
3. Acceptable Solutions and Verification Methods For New Zealand Building Code Clause E2 External moisture 3rd edition (Amendment 9), 27 June 2019
4. BBA Agrément Certificate 13/4998 Product Sheet 3, Kronospan OSB/3 for Sheathing, 26 April 2016
5. BBA Agrément Certificate 18/5480 Product Sheet 3, Kronospan OSB/3 for Sheathing, 26 April 2018
6. EPH Test Certificate CT-20-03-25-01 "Formaldehdye Content of Kronospan OSB/3", 25 March 2020
7. IVS Test Report 50198 "Test for retention of H3.1 LOSP treated OSB", 20 March 2020
8. Scion Test Report "P21:2010 9mm Kronspan OSB 600 Wall with Brackets", 24 October 2019
9. Scion Test Report "P21:2010 9mm Kronspan OSB 1200 Wall with Brackets", 24 October 2019
10. Scion Test Report "P21:2010 9mm Kronspan OSB 400 Wall with Brackets", 28 February 2020
11. Scion Test Report "P21:2010 9mm Kronspan OSB 10mm GIB standard 400 Wall with Brackets", 28 February 2020
12. Scion Test Report "P21:2010 9mm Kronspan OSB 10mm GIB standard 600 Wall with Brackets", 28 February 2020
13. Scion Test Report "P21:2010 9mm Kronspan OSB 10mm GIB standard 1200 Wall with Brackets", 28 February 2020
14. DOP 1393-CPR-0522 Kronospan OSB/3 according to EN300, 28 January 2019
15. GlobalBuild NZ OSB Barrier Design & Install Guide Version 1.3, February 2021

This certificate is issued by an independent certification body accredited by JAS-ANZ, the product certification accreditation body appointed by the Chief Executive of the Ministry of Business, Innovation and Employment under the Building Act 2004.
The Ministry does not in any way warrant, guarantee, or represent that the building method or product that is the subject of this certificate conforms with the New Zealand Building Code, nor accept any liability arising out of the use of the building method or product.
The Ministry disclaims to the extent permitted by law, all liability (including negligence) for claims of losses, expenses, damages, and costs arising as a result of the use of the building method(s) or product(s) referred to in this certificate.

This certificate may only be reproduced in its entirety. It is advised to check that this certificate is currently valid and not withdrawn or suspended by referring to the Register of Product Certificates on the Building Performance website http://www.building.govt.nz.
CERTIFICATE V1.3

PRODUCT CERTIFICATE

Kronospan OSB Barrier

14 CONDITIONS RELATING TO NOTIFICATION

(a) the certificate holder notifies the product certification body (Bureau Veritas) in writing of any intended change to any of the following particulars:
(i) the name, address, or contact details of the certificate holder:
(ii) any address of a location where a certified product is produced or manufactured:

(b) the certificate holder notifies the product certification body (Bureau Veritas) in writing of any intended change, modification, or alteration to any of the following:
(i) the certified building method or product:
(ii) the method of its production or manufacture:
(iii) the product quality plan prepared in respect of the certified building method or product:
(iv) the application or installation instructions for the certified building method or product:
(v) any documentation relating to the use and maintenance of the certified building method or product:

(c) if the certificate holder has any reason to suspect that the certified building method or product does not comply with the Building Code, the certificate holder notifies the product certification body (Bureau Veritas) in writing of the reason for that suspicion:

(d) if the certificate holder or the product certification body (Bureau Veritas) finds that a certified building method or product that has been released on the market does not comply with the Building Code, the certificate holder discloses that fact in disclosure statements published in a form that is acceptable to the product certification body and to the chief executive:

(e) if the certificate is suspended or revoked, the certificate holder—
(i) notifies all customers to whom the building method or product is regularly supplied; and
(ii) immediately ceases using the certificate, the mark of conformity, and any reference to the number of the certificate.

This certificate is issued by an independent certification body accredited by JAS-ANZ, the product certification accreditation body appointed by the Chief Executive of the Ministry of Business, Innovation and Employment under the Building Act 2004.
The Ministry does not in any way warrant, guarantee, or represent that the building method or product that is the subject of this certificate conforms with the New Zealand Building Code, nor accept any liability arising out of the use of the building method or product.
The Ministry disclaims to the extent permitted by law, all liability (including negligence) for claims of losses, expenses, damages, and costs arising as a result of the use of the building method(s) or product(s) referred to in this certificate.

This certificate may only be reproduced in its entirety. It is advised to check that this certificate is currently valid and not withdrawn or suspended by referring to the Register of Product Certificates on the Building Performance website http://www.building.govt.nz.

Kronobuild®



OSB Barrier General Warranty Terms

Oriented Strand Board OSB

WARRANTY TERMS

This warranty applies to GlobalBuild NZ OSB Barrier ('OSB Barrier') supplied by GlobalBuild NZ when used in accordance with all GlobalBuild NZ requirements.

This warranty is to be read in conjunction with all relevant and applicable technical documentation published or referenced by GlobalBuild NZ.

Date warranty valid:

5 years from proven date of purchase or dispatch from GlobalBuild NZ whichever is the earlier.

All enquiries relating to this warranty must (in the first instance) be directed to the place of purchase, the supplier or the installer.

GlobalBuild NZ warrants that:
At the time of delivery to the merchant (or site where applicable) the OSB Barrier will:

- be free from freight-related defects
- be free from defects that may have arisen through defective factory workmanship or materials
- conform to the performance characteristics listed on the current OSB Barrier pass™ ('warranted condition')

In the event a breach of the warranty is proven, the following applies:

- GlobalBuild NZ will, at its discretion, supply replacement OSB Barrier without charge or refund the value of the product.
- Other losses or damage caused by a breach of the warranty or failure of the product for any other reason are not covered.
- GlobalBuild NZ obligations under this warranty are limited to the replacement of defective OSB Barrier or the value of the OSB Barrier. The value of the materials will be reduced pro-rata, based on the remaining life of the product (as set by the relevant durability requirements of the NZ Building Code).
- GlobalBuild NZ reserves the right to supply other comparable materials should the warranted materials no longer be supplied by GlobalBuild NZ.

This warranty is subject to the following:

- Receipt of date of purchase of the product.
- Evidence satisfactory to GlobalBuild NZ of failure of the OSB Barrier.
- Receipt of a written claim from the claimant either within 30 days of when the defect would have become reasonably apparent or, if the defect was reasonably apparent prior to installation, then the claim must be made prior to installation.
- The claim must include full details of the alleged defect.
- Evidence satisfactory to GlobalBuild NZ that all maintenance requirements have been carried out.
- The warranty does not cover failure or problems caused by defective use; failure relating to improper design of the project structure; structural failure; settlement; movement of materials to which the product is attached or dependent on; acts of God including but not limited to earthquakes, cyclones, floods or other severe weather conditions; inadequate maintenance; growth of mould, mildew, fungi, bacteria or any organism on any product; or acts or omissions of a third party over whom GlobalBuild NZ has no control.
- The warranty does not cover failure or loss arising from the failure to follow all relevant GlobalBuild NZ advice and requirements.
- Normal wear and tear is excluded from this warranty.

All relevant information is available from GlobalBuild NZ (refer to www.globalbuild.nz).

Note:

All OSB Barrier technical information is uncontrolled in printed format, so in all instances refer only to the documentation on the website.



Kronobuild®



OSB barrier Design and Install Guide

Oriented Strand Board OSB

CONTENTS

1.0 GENERAL....4

1.1. Purpose of guide....4

1.2. Important Documents....4

1.3. Skills required....4

1.4. For more help....4

1.5. For our warranty....4

2.0 OSB barrier....5

2.1. What is OSB....5

2.2. Advantages....5

2.3. Description....5

2.4. GlobalBuild assurance statement....5

3.0 DESIGN....6

3.1. Design Considerations....6

3.1.1. Confirm Scope....6

3.1.2. Establish Substrate Suitability..6

3.1.3. Bracing Element....6

3.1.3.1 Bracing Element fixing....8

3.1.3.1.(A) Bracing Element fixing....9

3.1.4. Fixings....10

3.1.5. Top Plate Truss Connection...10

3.1.6. Lintel Tie Down Connection...10

3.1.7. Bottom plate Connection....10

3.1.8. GIB Handibrac ® Installation..10

3.1.9. Rigid Air barrier 11

4.0 PRE-INSTALLATION....12

4.1. Health & safety....12

4.2. Handling & storage....12

5.0 INSTALLATION....13

5.1. Key documents....13

5.2. Tools & other product requirements.13

5.2.1. Tools....13

5.2.2. Other Products....13

5.3. Confirm scope....13

5.4. Check building and substrates....13

5.5. Cutting & drilling panels....13

5.6. Confirm scope....14

5.7. Finishing....14

6.0 MAINTENANCE....15

6.1. General maintenance requirements.15

7.0 TECHNICAL DETAILS....16

8.0 NOTES....17

CODEMARK™
CM70096

pass

WE COMPLY s14G BUILDING ACT 2004

OSB - wood perfected



1.0 GENERAL

1.1. Purpose of guide

This guide provides advice on handling, installing and maintaining GlobalBuild NZ's Kronospan OSB barrier (OSB barrier).

1.2. Important Documents

This guide must be read in conjunction with the:

- GlobalBuild OSB barrier warranty.

1.3. Skills required

To install OSB barrier, the installer must, at a minimum, be a competent DIYer.

Where OSB barrier is specified by a designer, the designer shall have the appropriate skills, knowledge of the product and access to all OSB barrier technical information (refer to www.globabuild.nz).

Where Restricted Building Work (RBW) applies the designer or installer must either be a Licensed Building Practitioner (LBP) or be supervised by an LBP with the applicable licence.

1.4. For more help

Technical assistance is available at interior.install@xtra.co.nz.

While all reasonable efforts have been made to ensure the accuracy of information provided, this is a guide only, and it may be subject to change.

1.5. For our warranty

Refer to www.globabuild.nz.



2.0 OSB barrier

2.1. What is OSB

OSB barrier is manufactured of high quality softwood from sustainable forests, primarily spruce. The thin, large-sized veneer strands are dried carefully and blended within the production process with a mixture of synthetic resins and paraffin emulsion.

The panels are pressed with a continuous, uninterrupted production process, using high pressure and temperatures.

Due to its excellent strength, OSB is suited perfectly for a large range of applications, from packaging to construction purposes.

2.2. Advantages

- Environmentally friendly wood-based panel for universal applications in interior and protected exterior conditions.
- High dimensional stability, homogeneity and even density profile.
- Excellent bending, compression and tensile strength.
- High vapor diffusion resistance and thermal insulation benefits.
- 100% Recyclable.

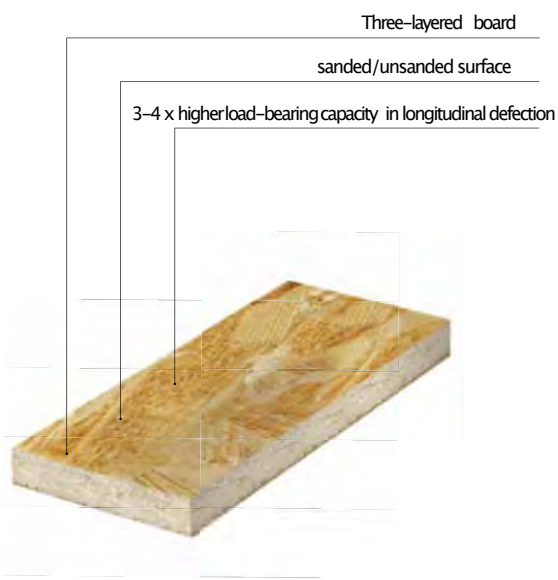

2.3. Description

OSB barrier is manufactured to EN 13986:2004+A1 to meet the requirements of OSB/3. This category is suitable for load-bearing conditions and for use in humid conditions. Humid refers to environments where panels are protected from external conditions but where moisture content can increase because of humidity.

OSB barrier is available as either untreated or treated (H3.1) panel. The H3 panel is LOSP envelope treated in NZ to meet the Hazard class H3.1 and is identified by the green edge colour and identifying stamp . Durability when used as a bracing element relies on the OSB barrier and connections to remain dry whilst in service and the OSB barrier not being exposed to high humidities*, liquid water or high temperatures.

OSB should be protected against prolonged exposure to excess moisture.

Panels are supplied in the following sizes:

- 2400 x 1200 x 9 mm
- 2440 x 1220 x 9 mm
- 2700 x 1200 x 9 mm
- 2740 x 1220 x 9 mm.

and for use as:

- an internal and protected external wall bracing element
- a rigid air barrier.

*Areas of high humidity include sauna rooms and similar.

2.4. GlobalBuild assurance statement

For scope, limitations and assurance refer to the Kronospan OSB barrier pass™.

3.0 DESIGN



3.1. Design Considerations

3.1.1. Confirm scope

Ensure the project falls within the allowed scope and limitations for the intended use, in particular suitability of the building and the structural framing support.

3.1.2. Establish substrate suitability

Ensure that the substrate to which the OSB barrier is to be fixed is suitable for the installation of the OSB barrier especially if it is to be used as a bracing element.

3.1.3. Bracing element

Bracing capacities are as follows:

Table 1 - P21 Ratings 2400mm High Kronospan OSB Barrier Wall Elements

BRACE CODE	WALL SIZE	WIND BU/m	EQ BU/m	DESCRIPTION OF ASSEMBLY	HOLD DOWN FIXINGS
KOSB-400	400 X 2400mm	89	111	OSB BARRIER PANELS FIXED TO ONE SIDE 90 X 45 H1.2 SG8 FRAMING. STUDS AT MINIMUM 400mm CENTRES, NO NOGS.	M12 BOLTS TO GIB HANDIBRACS AND BOTTOM PLATE. GIB HANDIBRAC TO EACH END.
KOSB-600	600 X 2400mm	91	104	OSB BARRIER PANELS FIXED TO ONE SIDE 90 X 45 H1.2 SG8 FRAMING STUDS AT MINIMUM 400mm CENTRES, NO NOGS.	M12 BOLTS TO GIB HANDIBRACS AND BOTTOM PLATE. GIB HANDIBRAC TO EACH END.
KOSB-1200	1200 X 2400mm	123	107	OSB BARRIER PANELS FIXED TO ONE SIDE 90 X 45 H1.2 SG8 FRAMING. STUDS AT MINIMUM 400mm CENTRES, NO NOGS.	M12 BOLTS TO GIB HANDIBRACS AND BOTTOM PLATE. GIB HANDIBRAC TO EACH END.
KOSB-400G	400 X 2400mm	100	120	OSB BARRIER PANELS FIXED TO ONE SIDE 90 X 45 H1.2 SG8 FRAMING. 10MM GIB STANDARD PLASTERBOARD TO OTHER SIDE STUDS AT MINIMUM 400mm CENTRES, NO NOGS.	M12 BOLTS TO GIB HANDIBRACS AND BOTTOM PLATE. GIB HANDIBRAC TO EACH END.
KOSB-600G	600 X 2400mm	127	143	OSB BARRIER PANELS FIXED TO ONE SIDE 90 X 45 H1.2 SG8 FRAMING. 10MM GIB STANDARD PLASTERBOARD TO OTHER SIDE STUDS AT MINIMUM 600mm CENTRES, NO NOGS.	M12 BOLTS TO GIB HANDIBRACS AND BOTTOM PLATE. GIB HANDIBRAC TO EACH END.
KOSB-1200G	1200 X 2400mm	179	157	OSB BARRIER PANELS FIXED TO ONE SIDE 90 X 45 H1.2 SG8 FRAMING. 10MM GIB STANDARD PLASTERBOARD TO OTHER SIDE STUDS AT MINIMUM 600mm CENTRES, NO NOGS.	M12 BOLTS TO GIB HANDIBRACS AND BOTTOM PLATE. GIB HANDIBRAC TO EACH END.

Note:

1. Table compiled based on Scion P21 testing.
2. BU Wind value as limited by the serviceability load capacity.
3. BU Earthquake value as limited by the ultimate load capacity.
4. NZS 3604 limits bracing ratings for walls on timber floors to 120 BU/m and for concrete floors to 150 BU/m.



3.1.3.1. Bracing element fixing

Bracing element fixings are as follows:

1. KOSB - OSB barrier to one side

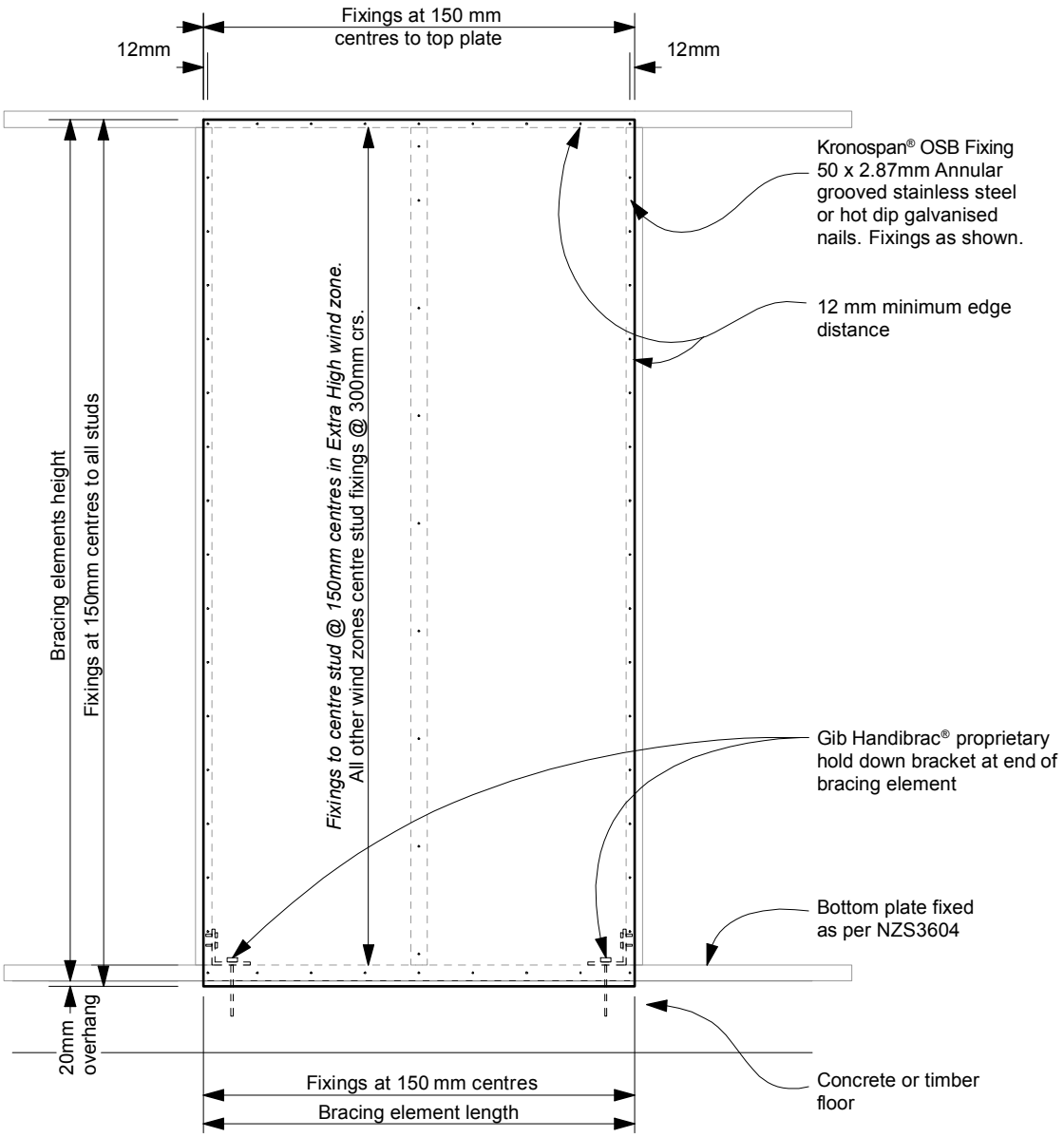

3.1.3.1.(A) Bracing element fixing

Bracing element fixings are as follows:

1. KOSB-G OSB barrier to one side and 10 mm GIB to other side

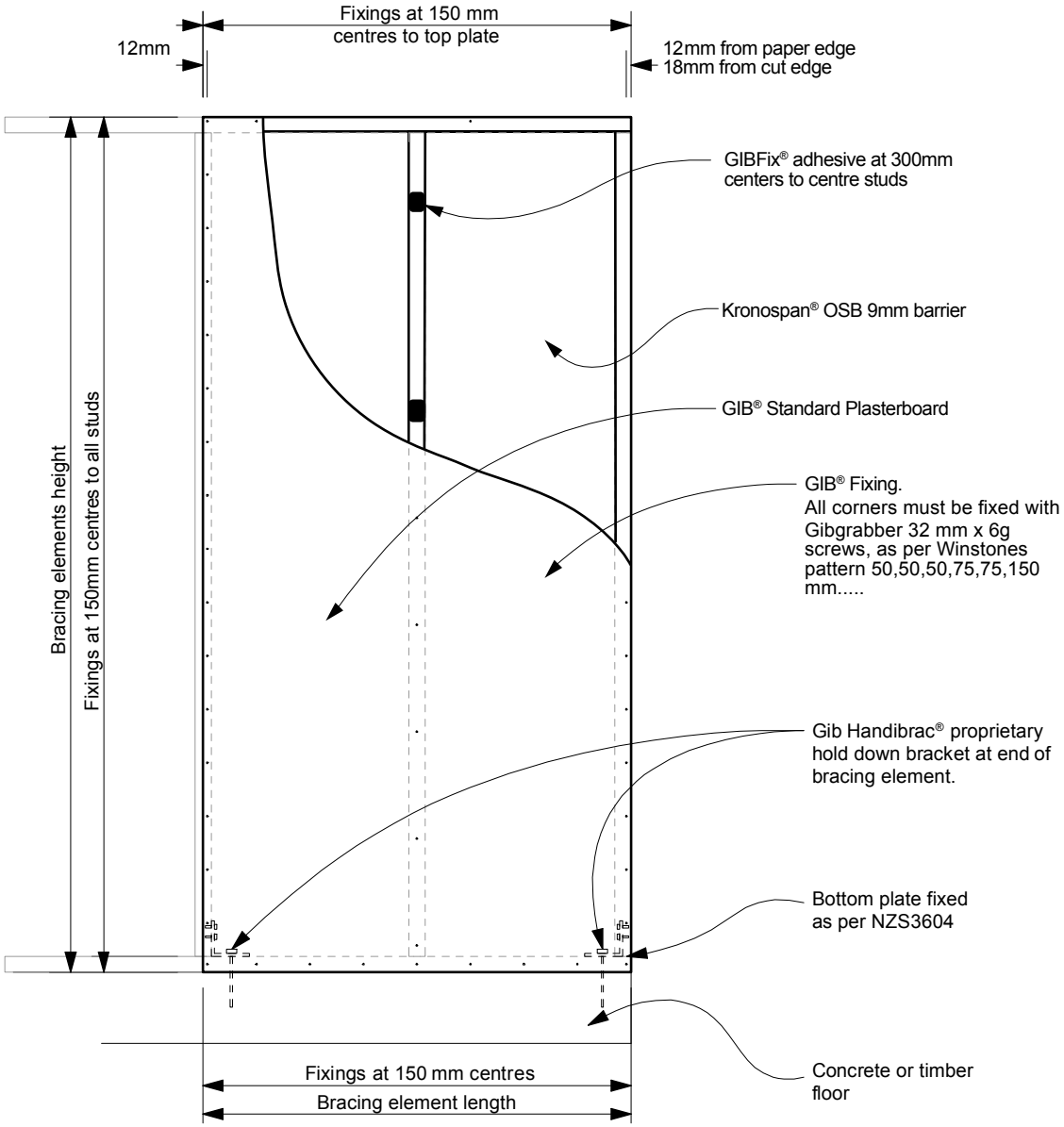

3.1.4. Fixings

Table 2 - Fixings

KRONOSPAN® OSB BARRIER	As per Section 5.6.1
GIB® PLASTERBOARD	Gibgrabber® 32mm x 6g screws to Winstones pattern 50,50,50,75,75,150mm .....
HOLD DOWN	M12 Hold down bolts or screws to GIB Handibracs® and bottom plate. GIB Handibrac® to each end.

3.1.5. Top Plate Truss Connection

Standard fixing of Kronospan OSB barrier to the top plate in accordance with with 3.1.3.1(A) Bracing Element fixing, will transfer the uplift loads to the bottom plates.

Refer to NZS 3604 Table 8.18 for uplift connections between top plate and truss framing.

3.1.6. Lintel Tie Down Connection

As an alternative to strap fixing as detailed in NZS 3604 fig 8.12. The following fixing detail may be used where the uplift does not exceed 7.5 kN.

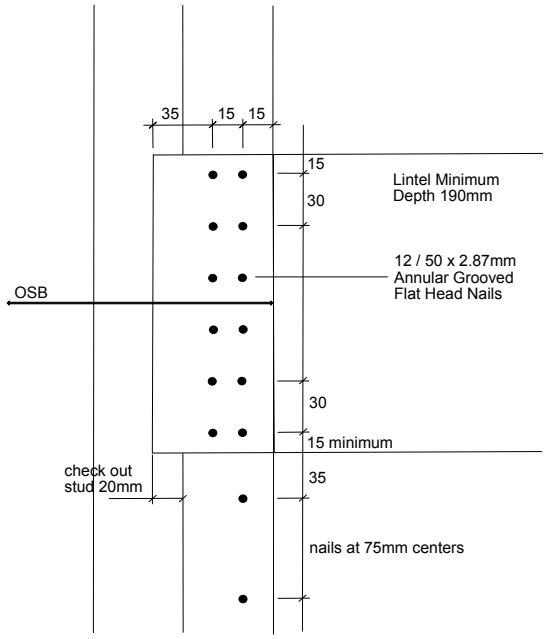

KRONOSPAN OSB LINTEL FIXING DETAIL

7.5 KN CONNECTION
DOUBLING STUD FIXING DETAILS TO NZS3604 FIG 8.12

3.1.7. Bottom plate Connection

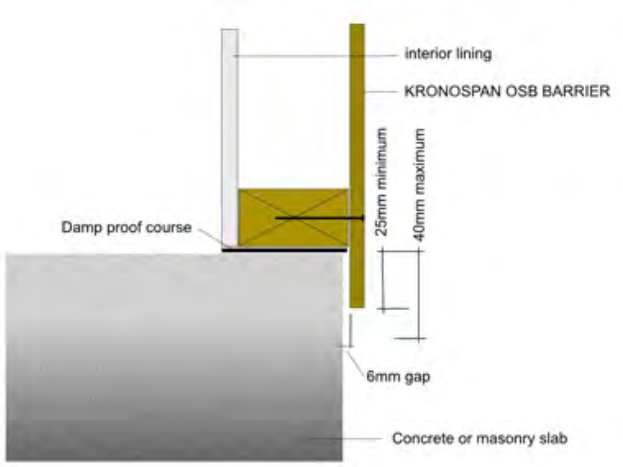

3.1.8. GIB Handibrac ® Installation

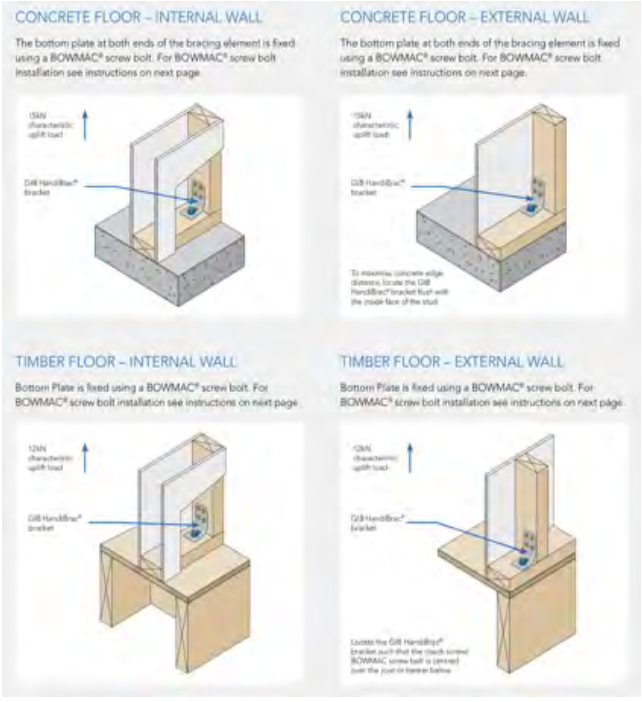

3.1.9. Rigid Air Barrier

To specify OSB barrier as a rigid air barrier requires installation to E2/AS1 paragraph 9.1.7.2 modified as follows:

- The bottom edge of the panel must extend a minimum of 20 mm below the bottom plate where used in conjunction with a cavity system.
- To be installed with a drained ventilated cavity and cladding system that complies with the relevant provisions of the NZBC.
- Where installed over lightweight steel framing a thermal break is required.
- OSB barrier is not intended for use as a temporary cladding, without the addition of a code compliant building wrap.
- OSB should be completely dry prior to installing internal linings and the balance of the external envelope.
- Where exposed to the weather, OSB Barrier must be wrapped in a flexible building wrap within 14 days where untreated, and 30 days where treated.
- During construction best building practices should be followed and prolonged exposure to moisture should not occur.
- Flexible building wraps and tapes must be LOSP compatible if used with treated panels and installed in accordance with the manufacturers instructions.



4.0 PRE-INSTALLATION

4.1. Health & safety

Take all necessary steps to ensure your safety and the safety of others:

- Ensure adequate ventilation or mechanical dust extraction when cutting or drilling
- Ensure the panels are well supported when cutting
- Wear appropriate safety equipment, including clothing, footwear and safety glasses
- Use all tools in accordance with the relevant instruction manuals
- Clear the work area of any obstructions before work starts
- Ensure edge protection and/or appropriate scaffold is installed where working at height.

For further information refer to:

- WorkSafe. (7/2018) Small Construction Sites, The Absolutely Essential Health and Safety Toolkit.
- WorkSafe. (12/2016) Health and Safety at Work, Quick Reference Guide.

4.2. Handling & storage

Take care when transporting, handling and storing OSB barrier to avoid damaging the panels. The panels must be protected from direct exposure to water, especially the edges. The panels must be secured with care to avoid damage by fastening ropes, belts and or strapping.

Panels are delivered to site strapped on skids. Unloading is likely to be carried out mechanically. A forklift is recommended as opposed to a crane or hi-ab. If a crane or hi-ab is to be used a spreader bar is required.

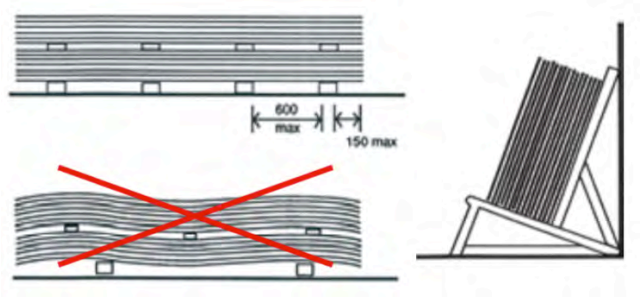

Store panels horizontally on a dry surface at least 150 mm off the ground supported by spacers that are orientated in the direction of the minor axis with a maximum spacing of 600 mm. The spacers must be at least the length of the panel width.

Insert another row of spacers after each 20 – 25 panels to ensure adequate ventilation. Spacers must be placed directly above lower spacers.

Insert additional spacers for the H3 treated panels to allow additional ventilation.

Ensure the area where the panels are stored is dry, well-ventilated, out of direct sunlight and away from any heat source. It is also recommended that the panels are protected from weather.





5.0 INSTALLATION

5.1. Key documents

Refer to the building consent documentation where applicable and the pass™ and this document.

5.2. Tools & other product requirements

5.2.1. Tools

- Fine-tooth hand saw, power saw or hand or table circular saw.
- Drill.
- Nail gun.
- Hole saw and speed bits.
- Moisture meter (where exposed to moist conditions).

5.2.2. Other products

- Tapes: LSOP Compatible flashing tape
- Flexible building wrap: LOSP compatible
- Fixings;
    - 50 x 2.87 mm angular groove gun nails - Stainless and or Galvanised as per zone requirements
    - Gib® grabber® 32 mm x 6 g screws
    - M12 hold down bolts
    - GIB® Handibrac®

5.3. Confirm scope

Ensure the project falls within the allowed scope and limitations for the intended use, in particular the structural framing support.

5.4. Check building and substrates

- Ensure that the timber framing, to which the OSB barrier is to be fixed has an 18 % MC or less.
- Ensure framing is minimum gauge 90 x 45 mm, or 0.55 mm where light gauge steel framing is used.
- Where used as a wall bracing, ensure studs are plumb, true and spaced correctly.

5.5. Cutting & drilling panels

Panels may be cut and drilled with common hand tools or machining tools. Ensure that the blade is sharp; hard metal edges are more suitable.

Where using a circular saw ensure setting is as low as possible. The feeding rate should be slightly lower than for solid timber.

Fix the boards to minimise movement through movement.

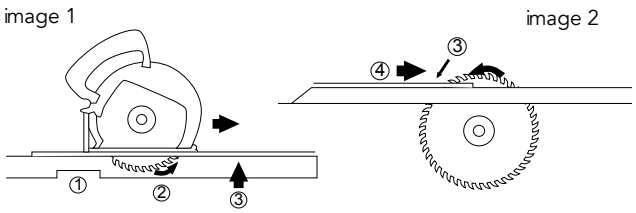

image 1. hand-held circular saw cutting:
image 2. table circular saw:

1. saw support
2. the direction of rotation of the saw blade
3. upper or decorated face
4. the shift direction of boards (feed)



5.6. Confirm scope

5.6.1. General installation requirements

All panels must be installed with the sheet edges fixed over solid framing.

Ensure nails are finished flush with the panel surface. Adjust gun setting to suit.

Panels are to be fixed as follows:

- 50 x 2.87 mm angular groove gun nails,
- 150 mm centres around the panel perimeter,
- 300 mm centres within body of panel up to an including very high wind zone or 150 mm centres for Extra High wind zone locations,
- 2 – 3 mm expansion gap required between all panels.

5.6.2. Install Wall Bracing

Refer to plans and specifications for location and installation requirements.

5.6.3. Install Rigid Air barrier

Panels installed as per section 5.6.1.

The panels finish with the bottom edge extending a minimum of 20 mm below the bottom plate.

Cavity battens must be fixed at maximum 600 mm centres.

The installation of a flexible building wrap is installed in accordance with paragraph 9.1.7.1, E2/AS1.

Flashings & Penetrations: Installation of flashings and weatherproof tape are in accordance with Section 9 E2/AS1.

5.7. Finishing

The selected cladding should be installed and finished within the selected building wrap requirements.





6.0 MAINTENANCE

6.1. General maintenance requirements

Under normal conditions, OSB barrier will need no maintenance as long as

- the external cladding has been maintained or
- the internal decorative coating has been maintained.





7.0 TECHNICAL DETAILS

KRONOSPAN TRADING S.R.L.
Str. Mihail Kogălniceanu Nr. 59, et.1, cam.1/12 • Sebeş • 515800 • Alba • România
Tel.: +40 258 801 100 • Fax: +40 258 801 199
office.ro@kronospan.ro • www.kronospan.ro

J1/ 903/ 2018 • RO 11894313
Capital social subscris 676653,78 LEI

FIŞĂ TEHNICĂ / *TECHNICAL SHEET*

PLĂCI PORTANTE PENTRU UTILIZARE ÎN MEDIU UMED OSB3 Superfinish/ *LOAD-BEARING BOARDS FOR USE IN HUMID CONDITIONS OSB3 Superfinish*

No. Crt.	Property	Unit	Thickness range (mm)					Test/ requirement standard
			6 to 10	>10 to <18	18 to 25	>25 to 32	>32 to 40	
1	Rezistenţă la încovoiere - Sens longitudinal Bending strength - Longitudinal Direction	N / mm²	≥ 22	≥ 20	≥ 18	≥ 16	≥ 14	EN 310 EN 300
2	Rezistenţă la încovoiere - Sens transversal Bending strength - Transversal Direction	N/ mm²	≥ 11	≥ 10	≥ 9	≥ 8	≥ 7	EN 310 EN 300
3	Modul de elasticitate la încovoiere – longitudinal Modulus of elasticity in Bending – Longitudinal Direction	N/mm²	≥ 3500	≥ 3500	≥ 3500	≥ 3500	≥ 3500	EN 310 EN 300
4	Modul de elasticitate la încovoiere – transversal Modulus of elasticity in Bending – Transversal Direction	N/mm²	≥ 1400	≥ 1400	≥ 1400	≥ 1400	≥ 1400	EN 310 EN 300
5	Coeziune internă Internal Bond	N / mm²	≥ 0,34	≥ 0,32	≥ 0,30	≥ 0,29	≥ 0,26	EN 319 EN 300
6	Umflare în grosime 24 h Swelling in thickness –24 h	%	≤ 15	≤ 15	≤ 15	≤ 15	≤ 15	EN 317 EN 300
7	Toleranţă la dimensiuni nominale - grosime Thickness tolerances	mm	±0,8					EN 324-1 EN 300
8	Toleranţă la dimensiuni nominale - latime si lungime Length and width tolerance	mm	±3,0					EN 324-1 EN 300
9	Toleranţa a rectitudinii muchiilor Egde straightness tolerance	mm/m	+/- 1,5					EN 324-2 EN 300
10	Toleranţă a perpendicularităţii Squareness	mm/m	2,0					EN 324-2 EN 300
11	Umiditate Moisture content	%	2 to 12					EN 322 EN 300
12	Coeziune interna dupa incercare la apa fierbinte Internal bond after boil test	N/mm²	0,15	0,13	0,12	0,06	0,05	EN 1087-1 EN 300
13	Emisia de aldehidă formică Formaldehyde emission	mg/100g	≤ 2					EN 12460-5 *EN 300*

Consultaţi arhitectul sau proiectantul dumneavoastră în privinţa stabilirii solicitărilor şi utilizării în acord cu standardele naţionale sau conform codurilor de proiectare pe baza valorilor date mai sus. Contactaţi departamentul nostru tehnic pentru detalii.

Consult your design engineer to establish applicable loadings and spans according to local standards or design codes using the above values. Contact our technical department if you have the need for more detailed information.

Lab Manager,
.....

Societatea Comercială KRONOSPAN TRADING S.R.L. RO 11894313 J1/903/2018 2 Sebeş - România

Production Manager,
.....

FT 805 – Fişa tehnică OSB 3 Superfinish , Ediţia 1, Revizia 0 din 01 Noiembrie 2018, Elaborat SL, Aprobat DP

8.0 NOTES





PRODUCT ASSURANCE SUPPLIER STATEMENT
pass™ no: 19113 | Expires: 04/2022

CODEMARK™ CM70096

GLOBALBUILD.NZ

KRONOSPAN OSB BARRIER

PURPOSE

Kronospan OSB Barrier (OSB Barrier) is supplied for use as a bracing element, which when combined with a flexible underlay, provides a rigid underlay that acts as a vapour and air barrier with weathertight properties.

EXPLANATION

Kronospan OSB Barrier is an oriented strand board (OSB/3), manufactured from waterproof, heat-cured adhesives and rectangularly shaped wood strands that are arranged in cross-oriented layers.

OSB is a strong, dimensionally stable panel that resists deflection, delamination and warping. The panels also resist racking and shape distortion when subjected to wind and seismic conditions. Relative to their strength, OSB panels are light in weight and easy to handle and install.

OSB/3 is defined under EN 300 as suitable for load-bearing conditions and for use in humid conditions. Humid refers to environments where panels are protected from external conditions but where moisture content can increase because of humidity.

OSB Barrier is supplied untreated or envelope treated (LOSP) in NZ in accordance with AS/NZS 1604.2 to meet the requirements of hazard class H3.1.

The panels are available in the following sizes:

- 2400 x 1200 x 9 mm
- 2440 x 1220 x 9 mm
- 2700 x 1200 x 9 mm
- 2740 x 1220 x 9 mm.

kronospan



For further assistance please contact:

WE COMPLY s14G BUILDING ACT 2004

+64 21 487007
Interior.install@xtra.co.nz
www.globalbuild.nz

SCOPE AND LIMITATIONS OF USE

Scope	Limitations
Location	
In wind zones up to and including extra high as defined in NZS 3604:2011 or to a wind design pressure (ULS) of 2.6 kPa.	› Where the ULS exceeds 2.1 kPa, the primary structure must be specifically engineered in accordance with B1/VM1.
In all exposure zones as defined in NZS 3604:2011.	› Fixing material selection to be in accordance with section 4, NZS 3604:2011.
In all seismic zones.	
Greater than 1 m from a relevant boundary.	
Building	
In buildings where the relevant structure complies with the NZ Building Code or where the designer and installer have satisfied themselves that the existing structure is suitable for the intended building work.	› The building height must be less than 10 m unless specifically designed with respect to fire.
On timber or lightweight steel framing.	
As a wall bracing element.	› OSB Barrier must be installed on timber framing. › Installation is to be in accordance with the relevant Scion test assembly.
As a rigid air barrier.	› OSB Barrier must be installed in conjunction with a flexible building wrap and a drained ventilated cavity that complies with all relevant provisions of the building code. The wrap must be compatible with LOSP treatment where applicable. › OSB Barrier must also be installed in conjunction with an external cladding system and joinery that complies with all relevant provisions of the NZ Building Code. › Where installed behind an open-jointed rainscreen, a flexible building wrap and tape must be installed. The wrap and tape must be compatible with LOSP treatment where applicable. › Where installed over lightweight steel framing, a thermal break is required.
Internally as part of a wall assembly or as an internal lining.	› Where used in areas prone to water splash, a waterproof membrane must be applied. › If to be used internally and left exposed, OSB Barrier may only be used where a minimum performance as described by material group number 3 is required.

OTHER CERTIFICATIONS AND APPROVALS HELD BY GLOBAL BUILD

- RINA Services S.p.A. [21/03/2019] *PEFC ST 2002:2013.* Certificate no. RINA-PEFC-CoC-18.
- British Board of Agrément (BBA). [26/04/2016] *Kronospan OSB/3 for sheathing.* 07/4498 Product sheet 3.
- British Board of Agrément (BBA). [26/04/2016] *Kronospan OSB/3 for sheathing.* 13/4498 Product sheet 3.
- British Board of Agrément (BBA). [26/04/2018] *Kronospan OSB/3 for sheathing.* 18/5480 Product sheet 3.
- PFS TECO. [01/11/2018] *Certificate of PS2-10 Approval. Performance Standard for wood-based structural use panels. Canadian Standards Association.*

USEFUL INFORMATION

For information on the design, installation and maintenance of OSB Barrier and for our warranty refer to **www.globalbuild.nz**.

VERSION: V4.0

GLOBALBUILD.NZ

CONDITIONS OF USE

- OSB Barrier must be used in conjunction with the fixing system specified in the GlobalBuild NZ OSB Barrier Design and Installation Guide.
- Where fire obligations apply, OSB Barrier must be specifically designed with respect to fire.
- Where exposed to the weather, OSB Barrier must be wrapped in a flexible building wrap within 14 days where untreated and 30 days where treated.

PERFORMANCE CLAIMS

If designed, installed and maintained in accordance with all GlobalBuild NZ requirements, OSB Barrier will comply with or contribute to compliance with the following performance claims:

NZ Building Code clauses	BASIS OF COMPLIANCE[1] Compliance statement	Demonstrated by
B1 Structure B1.3.1, B1.3.2, B1.3.3 (a, e, f, h, q) B1.3.4 (a, b, c, d, e)	Product Certification CodeMark Certificate. CODEMARK CM70096	CodeMark Certificate is issued by Bureau Veritas. Bureau Veritas is an accredited product certification body under section 263 of the Building Act 2004.
B2 Durability B2.3.1 (a, b) B2.3.2 (a)		
E2 External Moisture E2.3.2 E2.3.5		
F2 Hazardous Building Materials F2.3.1		

1. The Compliance Statement is the pass holder's statement that they have met their obligations under s14G(2) of the Building Act 2004.

BASIS OF CERTIFICATION

Technical

- APA. [02/2009] *Water Vapor Permeance of Wood Structural Panels and Wood Wall Construction.* Number J450. Retrieved from https://www.norbord.com/na/wp-content/uploads/2017/07/Moisture-Vapor-and-Perms-J450.pdf. [Accessed 24/07/2020].
- British Board of Agrément (BBA). [26/04/2018] *Kronospan OSB/3 for sheathing.* 18/5480 Product sheet 3.
- Drevarsky ustav Timber Institute. [28/01/2019] *Certificate of conformity of the factory production control.* Certificate 1393-CPR-0522 to EN 13986:2004+A1:2015.
- Kronospan. [11/2018] *Declaration of performance.* No. 1393-CPR-0522. V1.
- Independent Verification Services (IVS). [20/03/2020] *Timber Testing Report.* Reference 50198.
- Kronospan. [06/01/2015] *Oriented Strand Board Technical Data.* Reference KC/QUAL/DOC/0025.
- Global Build NZ. (n.d) Kronospan OSB Barrier Design and Installation Guide. V1.0.
- PFS TECO . [01/11/2018] *Certificate of PS2-10 Approval. Performance Standard for wood-based structural use panels. Canadian Standards Association.*
- Scion. [28/02/2020] P21:2010. *9 mm Kronospan OSB 10 mm 400 wall with brackets.*
- Scion. [28/02/2020] P21:2010. *9 mm Kronospan OSB 10mm GIB standard 1200 wall with brackets.*
- Scion. [28/02/2020] P21:2010. *9 mm Kronospan OSB 10 mm GIB standard 400 wall with brackets.*
- Scion. [28/02/2020] P21:2010. *9 mm Kronospan OSB 10 mm GIB standard 600 wall with brackets.*

Quality

- Bureau Veritas. Audit of Kronospan manufacturing facilities.
- Bureau Veritas. Review and audit of Global Building NZ quality plan.

Buildability

- Bureau Veritas. Site audits.

2. Sources of information also include the Building Act 2004 and its regulations, including the Building Code (Schedule 1 of the Building Regulations 1992), Acceptable Solutions and Verification Methods, and relevant cited standards.

Scan or click this QR code for a full download of Compliance Documentation for this pass™.
www.globalbuild.nz

VERSION: V4.0 **DATE:** 22/04/2021

Note: Uncontrolled in printed format.

NAME: Brad Smith

POSITION: Director

Signed on behalf of Global Build NZ:

Brad Smith

Digitally signed by Brad Smith
Date: 2021.04.22 14:08:18 +12'00'

By signing this pass™ the signatory confirms that, in respect of the subject of this pass™, the company has met their s14G obligations under the Building Act 2004.

pass

4 Holdaway Avenue, Northcote, Auckland 0627 › interior.install@xtra.co.nz › +64 21 487007 › www.globalbuild.nz

This Product Assurance Supplier Statement (pass™) has been prepared by TBB in accordance with MBIE PTS guidelines and the recommendations of s9.2, Determination No. 2019-011 (issued 12 April 2019). TBB is ISO9001:2016 certified. Copyright © 2017, The Building Business Limited (TBB). All rights reserved.

WILEY GEOTECHNICAL

GEOTECHNICAL ENGINEERING SERVICES

22 November 2021

Linda & David Kendall
C/: Lance Vale (CH Northland Ltd)
linda.kendall@xtra.co.nz
lance@coastalhomesnz.com

RE: PS 4 for compaction of fill beneath proposed dwelling – Lot 81, DP 556753, Robert Hastie Drive, Mangawhai. Building Consent BC 210441.

Wiley Geotechnical Limited (WGL) was requested by Lance Vale (CH Northland), acting on behalf of Linda & David Kendall, to visit the site and perform geotechnical site observations, compaction control and certification of engineered fill for a proposed new concrete slab foundation.

WGL visited the site on the 11th of October 2021. The compacted engineered fill (up to 3.0 m of hardfill) within the proposed building area was inspected. Typical measured CBR values of 24 to 30 were achieved in the area of engineered fill as indicated by the Clegg Hammer and was considered appropriate. All works were as per design. Test locations and their respective CBR values are illustrated in the Site Report attached to this letter.

All works are to be in general accordance with NZS4431 Code of Practice for Earthfill for Residential Development.

Conclusions and Recommendations

We consider the site to be suitable for the construction of the proposed dwelling.

The fill that has been placed appears to be in general accordance with NZS4431 “Code of Practice for Earthworks for Residential Development”.

Based on our testing, it is our opinion that a geotechnical ultimate bearing capacity of 300 kPa is available on the prepared engineered pad.

LIMITATIONS

(i) This report has been prepared for the use of our client, Linda & David Kendall and their professional advisers and the relevant Regional Authorities in relation to the specified project brief described in this report. No liability is accepted for the use of any part of the report for any other purpose or by any other person or entity.

(ii) Assessments made in this report are based on the ground conditions indicated from published sources, site inspections and subsurface investigations described in this report based on accepted normal methods of site investigations. Variations in ground conditions may exist between test locations and therefore have not been taken into account in the report. If variations are found during excavation or at foundation preparation stage WGL should be notified immediately so we can amend our recommendations.

(iii) This Limitation should be read in conjunction with the IPENZ/ACENZ Standard Terms of Engagement.

We trust that this information meets your current requirements. Please do not hesitate to contact the undersigned on 021 0399 385 or matt@wileygeotechnical.co.nz if you require any further information.



Matt Wiley, CPEng

Principal Engineer

Attachments:

- PS 4 – Construction Review

- Site Notes

Building Code Clause(s) B1/VM4

PRODUCER STATEMENT – PS4 – CONSTRUCTION REVIEW

ISSUED BY: Wiley Geotechnical Ltd
(Construction Review Firm)

TO: Linda & David Kendall
(Owner/Developer)

TO BE SUPPLIED TO: Kaipara District Council
(Building Consent Authority)

IN RESPECT OF: Compaction of Hard Fill beneath proposed dwelling.
(Description of Building Work)

AT: Lot 81 Robert Hastie Drive
(Address)

Town/City: Mangawhai (Address) **LOT** 81 **DP** 556753 **SO** .....

We Wiley Geotechnical Ltd (Construction Review Firm) have been engaged by Lance at CH Northland Ltd

To provide ☐ CM1 ■ CM2 ☐ CM3 ☐ CM4 ☐ CM5 (Engineering Categories) or ☐ observation as per agreement with owner/developer Linda & David Kendall

or ☐ other ..... (Extent of Engagement) services

in respect of clause(s) B1 & B2 ..... of the Building Code for the building work described in documents relating to Building Consent No. BC 210441 ..... and those relating to Building Consent Amendment(s) Nos. ..... issued during the course of the works. We have sighted these Building Consents and the conditions of attached to them.

Authorised instructions/variations(s) No. ..... (copies attached) or by the attached Schedule ☐ have been issued during the course of the works.

On the basis of ☐ this review ■ these review(s) and information supplied by the contractor during the course of the works and **on behalf of the firm** undertaking this Construction Review, **I believe on reasonable grounds** that ☐ All or ■ Part only of the building works have been completed in accordance with the relevant requirements of the Building Consent and Building Consent Amendments identified above, with respect to Clause(s) B1/VM4 of the Building Code. I also believe on reasonable grounds that the persons who have undertaken this construction review have the necessary competency to do so.

I, Matthew Lewis Wiley (Name of Construction Review Professional) am: ■ CPEng.# 220767

I am a member of: ■ Engineering New Zealand and hold the following qualifications BSc, MSc (Honours)

The Construction Review Firm issuing this statement holds a current policy of Professional Indemnity Insurance no less than $200,000*.

The Construction Review Firm is a member of ACE New Zealand: ☐

SIGNED BY Matthew Lewis Wiley (Name of Construction Review Professional) (Signature) M Wiley

ON BEHALF OF Wiley Geotechnical Ltd (Construction Review Firm) Date 11 Oct 21

Note: This statement shall only be relied upon by the Building Consent Authority named above. Liability under this statement accrues to the Design Firm only. The total maximum amount of damages payable arising from this statement and all other statements provided to the Building Consent Authority in relation to this building work, whether in contract, tort or otherwise (including negligence), is limited to the sum of $200,000.*

This form is to accompany **Forms 6 or 8 of the Building (Form) Regulations 2004** for the issue of a Code Compliance Certificate.

THIS FORM AND ITS CONDITIONS ARE COPYRIGHT TO ACE NEW ZEALAND AND ENGINEERING NEW ZEALAND

GUIDANCE ON USE OF PRODUCER STATEMENTS

Producer statements were first introduced with the Building Act 1991. The producer statements were developed by a combined task committee consisting of members of the New Zealand Institute of Architects, Institution of Professional engineers New Zealand (now Engineering New Zealand), ACE New Zealand in consultation with the Building Officials Institute of New Zealand. The original suit of producer statements has been revised at the date of this form as a result of enactment of the Building Act (2004) by these organisations to ensure standard use within the industry.

The producer statement system is intended to provide Building Consent Authorities (BCAs) with reasonable grounds for the issue of a Building Consent or a Code Compliance Certificate, without having to duplicate design or construction checking undertaken by others.

PS1 Design Intended for use by a suitably qualified independent design professional in circumstances where the BCA accepts a producer statement for establishing reasonable grounds to issue a Building Consent;

PS2 Design Review Intended for use by a suitably qualified independent design professional where the BCA accepts an independent design professional's review as the basis for establishing reasonable grounds to issue a Building Consent;

PS3 Construction Forms commonly used as a certificate of completion of building work are Schedule 6 of NZS 3910:2013 or Schedules E1/E2 of NZIA's SCC 2011[2]

PS4 Construction Review Intended for use by a suitably qualified independent design professional who undertakes construction monitoring of the building works where the BCA requests a producer statement prior to issuing a Code Compliance Certificate.

This must be accompanied by a statement of completion of building work (Schedule 6).

The following guidelines are provided by ACE New Zealand and Engineering New Zealand to interpret the Producer Statement.

Competence of Design Professional

This statement is made by a Design Firm that has undertaken a contract of services for the services named, and is signed by a person authorised by that firm to verify the processes within the firm and competence of its designers.

A competent design professional will have a professional qualification and proven current competence through registration on a national competence based register, either as a Chartered Professional Engineer (CPEng) or a Registered Architect.

Membership of a professional body, such as Engineering New Zealand (formerly IPENZ), provides additional assurance of the designer's standing within the profession. If the design firm is a member of the ACE New Zealand, this provides additional assurance about the standing of the firm.

Persons or firms meeting these criteria satisfy the term "suitably qualified independent design professional".

*Professional Indemnity Insurance

As part of membership requirements, ACE New Zealand requires all member firms to hold Professional Indemnity Insurance to a minimum level.

The PI Insurance minimum stated on the front of this form reflects standard, small projects. If the parties deem this inappropriate for large projects the minimum may be up to $500,000.

Professional Services during Construction Phase

There are several levels of service which a Design Firm may provide during the construction phase of a project (CM1-CM5 for Engineers[3]). The Building Consent Authority is encouraged to require that the service to be provided by the Design Firm is appropriate for the project concerned.

Requirement to provide Producer Statement PS4

Building Consent Authorities should ensure that the applicant is aware of any requirement for producer statements for the construction phase of building work at the time the building consent is issued as no design professional should be expected to provide a producer statement unless such a requirement forms part of the Design firm's engagement.

Attached Particulars

Attached particulars referred to in this producer statement refer to supplementary information appended to the producer statement.

Refer Also:

1 Conditions of Contract for Building & Civil Engineering Construction NZS 3910: 2013

2 NZIA Standard Conditions of Contract SCC 2011

3 Guideline on the Briefing & Engagement for Consulting Engineering Services (ACE New Zealand/IPENZ 2004)

4 PN Guidelines on Producer Statements

www.acenz.org.nz
www.engineeringnz.org

Engineer's / Inspector's Report

WILEY GEOTECHNICAL

Linda Kendall c/ Lance Coastal Homes

Project Name: Lot 81, Robert Hastie Drive The Sanctuary

Project No.: 21076 Date: 11 - 10 - 21

Time arrived on site: Weather: Fine

Time left site: hrs Contractor's Working Hours:

Travel time: hrs

Total time: 3:30

Final inspection of earthworks & fill for new dwelling. Upto 3.0 m of hard fill

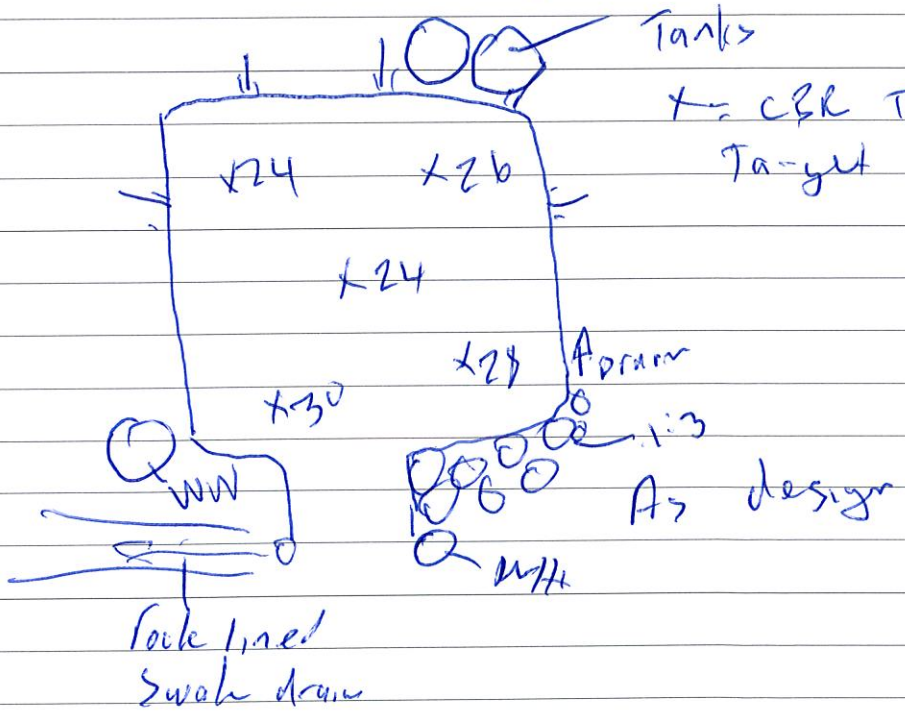

x = CBR Test
Target > 15

As design

All tests > 15; OK for 300 kPa ultimate bearing capacity

OK to place foundation elements (Raft)

Will to issue PS4 for ground bearing

Distribution	Initials

Engineer / Inspector:

Reviewed by:

KAIPARA DISTRICT

Kaipara te Oranganui • Two Oceans Two Harbours

KAIPARA DISTRICT COUNCIL

Producer Statement Construction (PS3)

Construction

ISSUED BUILDING CONSENT NUMBER 210441

THIS PS3 IS ISSUED BY: BREAM BAY COATINGS (2015) LTD

TO: **KAIPARA DISTRICT COUNCIL**

IN RESPECT OF: .....

AT (Address): LOT 81 THE SANCTUARY MANGAWHAI HEADS

LEGAL DESCRIPTION - LOT.....DP .....SO .....

FROM: ..... (Installer),

LICENSED BY.....Reg./License No: 129163

engaged by LINDA KENDALL (Owner/Builder)

In respect of clause(s) B1 and B2 of the Building Regulations 1992 for the building work described by the drawings and specifications prepared by the design firm titled;

.....

.....

.....

numbered.....

.....

authorised variation(s).....(copies attached)

have been issued during the course of the works.

I have sighted the issued building consent and read the conditions. As the contractor/builder I can confirm that the building works have been carried out in accordance with the requirements of the New Zealand Building Code, the conditions of the building consent, the design drawings and specifications and in accordance with the listed variations (if any).

I understand that if this producer statement is accepted, that it may be used to verify that the building work All / Part only as specified in the attached particulars, the subject of this building consent meets, based on reasonable grounds, the requirements of this building consent and the requirements of the Building Code in respect to clauses B1, B2, ...of the Building Regulations 1992.

☑ I understand and accept that Council may rely on this document, for the purposes of establishing compliance with the above building consent and that the content including the signature, whether electronic or not, is truly representative and authoritative of the information contained.

Name: CLARK SMITH Signature: [signature] Date: 25/02/2022

Address: 7 HOIHERE DRIVE ONE TREE POINT

Contractor/Applicator: BREAM BAY COATINGS (2015) LTD

Telephone: 021552196 (bus) .....(home) Fax .....

File: 3117.03

PS.C
Version 1
Issued 1 March 2014

Form 6A

Memorandum from licensed building practitioner: Record of building work

Section 88, Building Act 2004

Please fill in the form as fully and correctly as possible.
If there is insufficient room on the form for requested details, please continue on another sheet and attach the additional sheet(s) to this form.

THE BUILDING

Street address: LOT 81 THE SANCTUARY	
Suburb:	
Town/City: MANGAWHAI HEADS	Postcode:

THE PROJECT

Building consent number: 210441	

THE OWNER(S)

Name(s): Mr & Mrs KENDALL	
Mailing address:	
Suburb:	PO Box/Private Bag:
Town/City:	Postcode:
Phone number: 0220 546323	Email address: linda.kendall@xtra.co.nz

EXTERNAL MOISTURE MANAGEMENT SYSTEMS		
Work that is restricted building work	**Description of restricted building work**	**Carried out or supervised**
Tick ✓	If necessary, describe the restricted building work.	Tick ✓ whether you carried out the restricted building work or supervised someone else carrying out the restricted building work.
Damp proofing ☐		○ Carried out ○ Supervised
Roof cladding or roof cladding system ☐		○ Carried out ○ Supervised
Ventilation system (for example, subfloor or cavity) ☐		○ Carried out ○ Supervised
Wall cladding or wall cladding system ☑	TO SUPPLY, FIX, PLASTER & PAINT SPECIALIZED EZPANEL AAC SYSTEM TO EXTERIOR	○ Carried out ✓ Supervised
Waterproofing ☐		○ Carried out ○ Supervised
Other ☐		○ Carried out ○ Supervised

ISSUED BY

Name and contact details of the licensed building practitioner who is licensed to carry out or supervise restricted building work.

Name: CLARK SMITH	LBP number: 129163
Class(es) licensed in: E 2.	
Plumbers, Gasfitters and Drainlayers registration number (if applicable):	
Mailing address (if different from below):	
Street address/Registered office: 7 HOLMGRE DRIVE LA POINTE	
Suburb: LA POINTE	Town/City: ONE TREE POINT
PO Box/Private Bag	Postcode:
Phone number:	Mobile: 021552196
After hours:	Fax:
Email address: plastering@bremboycoatings.co.nz	Website:

DECLARATION

I CLARK SMITH carried out or supervised the restricted building work recorded on this form.

Signature: _____

Date: 25/02/2022

KAIPARA DISTRICT

Kaipara te Oranganui • Two Oceans Two Harbours

KAIPARA DISTRICT COUNCIL

Producer Statement Construction (PS3)

Construction

ISSUED BUILDING CONSENT NUMBER BC210441

THIS PS3 IS ISSUED BY: Freedom Pools and Spa 2006 Limited

TO: **KAIPARA DISTRICT COUNCIL**

IN RESPECT OF: Private Fibreglass Swimming Pool. Also includes necessary plumbing to gulley trap or soak pit.

AT (Address): 53 Robert Hastie Drive, Mangawhai 0573

LEGAL DESCRIPTION - LOT 81 DP 556753 SO ……

FROM: Glenn Handley …… (Installer),

LICENSED BY……Reg./License No: N/A

engaged by Linda & David Kendall (Owner/Builder)

In respect of clause(s) B1 and B2 of the Building Regulations 1992 for the building work described by the drawings and specifications prepared by the design firm titled;

……

……

……

numbered……

……

authorised variation(s)……(copies attached)

have been issued during the course of the works.

I have sighted the issued building consent and read the conditions. As the contractor/builder I can confirm that the building works have been carried out in accordance with the requirements of the New Zealand Building Code, the conditions of the building consent, the design drawings and specifications and in accordance with the listed variations (if any).

I understand that if this producer statement is accepted, that it may be used to verify that the building work All / Part only as specified in the attached particulars, the subject of this building consent meets, based on reasonable grounds, the requirements of this building consent and the requirements of the Building Code in respect to clauses B1, B2, ……..……of the Building Regulations 1992.

☑ I understand and accept that Council may rely on this document, for the purposes of establishing compliance with the above building consent and that the content including the signature, whether electronic or not, is truly representative and authoritative of the information contained.

Name: Glenn Handley ……..Signature: Glenn Handley Digitally signed by Glenn Handley Date: 2022.02.28 12:03:07 +13'00' ……Date: 28/02/2022

Address: 1/14 Agency Lane, Silverdale ……..…

Contractor/Applicator: Freedom Pools and Spa 2006 Limited ……..……..…

Telephone: 0272830141 ……(bus) 094267371 ……..(home) Fax N/A ……

File: 3117.03

Electrical Certificate of Compliance & Electrical Safety Certificate

Reference/Certificate ID No.: 53115

This form has been designed to be used by licensed electrical workers to certify that installations or Part installations under Part 1 or Part 2 of AS/NZS 3000 are safe to be connected to the specified system of electrical supply

Location Details: 53 Robert Hastie Drive

Contact Details: (Name and address) Kendall

Name of Electrical Worker: Jason Brown

Registration/Practising license number: E19481

Organisation/company: Hotwired Electrical

Phone and email: 021 405 019

Name of person(s) supervised:

CoC

Type of work: ☐ Additions ☐ Alterations ☑ New work

The prescribed electrical work is: ☐ Low risk ☐ General ☑ High Risk (Specify): mains

Reference standards: ☐ Part 1 of AS/NZS 3000 ☐ Part 2 of AS/NZS 3000

☐ Additional Standards:

Description of Work (including date/s of work and type of supply system)

prewire & fit off 3ø house & meterbox.
earth peg located West side of house by pool shed.

I certify that the completed prescribed electrical work to which this Certificate of Compliance applies has been done lawfully and safely, and the information in the certificate is correct in that the installation, or part of the installation:

Select those that apply:

- ☐ Has been installed in accordance with the specified certified design[1]
- ☑ Has an earthing system that is correctly rated (where applicable)
- ☑ Contains fittings that are safe to connect to a power supply
- ☑ Relies on a supplier Declaration of Conformity[1]
- ☑ Relies on a manufacturer's instructions[1]
- ☑ Has been satisfactorily tested in accordance with the Electricity (Safety) Regulations 2010
- ☑ Is safe to connect

Test Results	
Polarity (Independent earth):	
Insulation resistance:	
Earth Continuity:	
Bonding:	
Fault Loop impedance:	
Other (specify):	

Electronic/Other reference: 53115

Certifier's signature: Jason Brown

Date: 11/5/22

1 Attach or reference. If it is impractical to attach a copy of a particular manufacturer's instructions, or of any certified design or supplier declaration of conformity, provide a reference to where the documents can be found, in a readily accessible format, by electronic means.

ESC

I certify that the installation, or part of the installation, to which this Electrical Safety Certificate applies is connected to a power supply and is safe to use.

Certifier's name: Jason Brown

Registration/Practising license number: E19481

Certifier's signature:

Certificate Issue Date: 11/5/22

Connection Date: 11/5/22

CUSTOMER COPY - THIS IS AN IMPORTANT DOCUMENT AND SHOULD BE RETAINED FOR A MINIMUM OF 7 YEARS

This certificate also confirms that the electrical work complies with the building code for the purposes of Section 19(1) (e) of the Building Act 2004

White - Customer Copy Blue - Inspectors Copy Yellow - Electricians Copy

JOP10566A

As built drainage plan

Building Consent number: BC210441

DETAILS

Owner:	Linda & David Kendall		
Mailing address:	53 Robert Hastie Drive Mangawhai	Postcode:	0573
Legal description of land where building is located:			
Lot number:	81	DP number:	556753
Drain-layer:	N/A - PVC Pipe Only	Registration number:	N/A
Date submitted:			

Note: Please provide figures/measurements from a defined point of reference.
Note: Use black ink for building outline. Denote stormwater as -------S/W------- and sanitary sewer as -------S/S-------

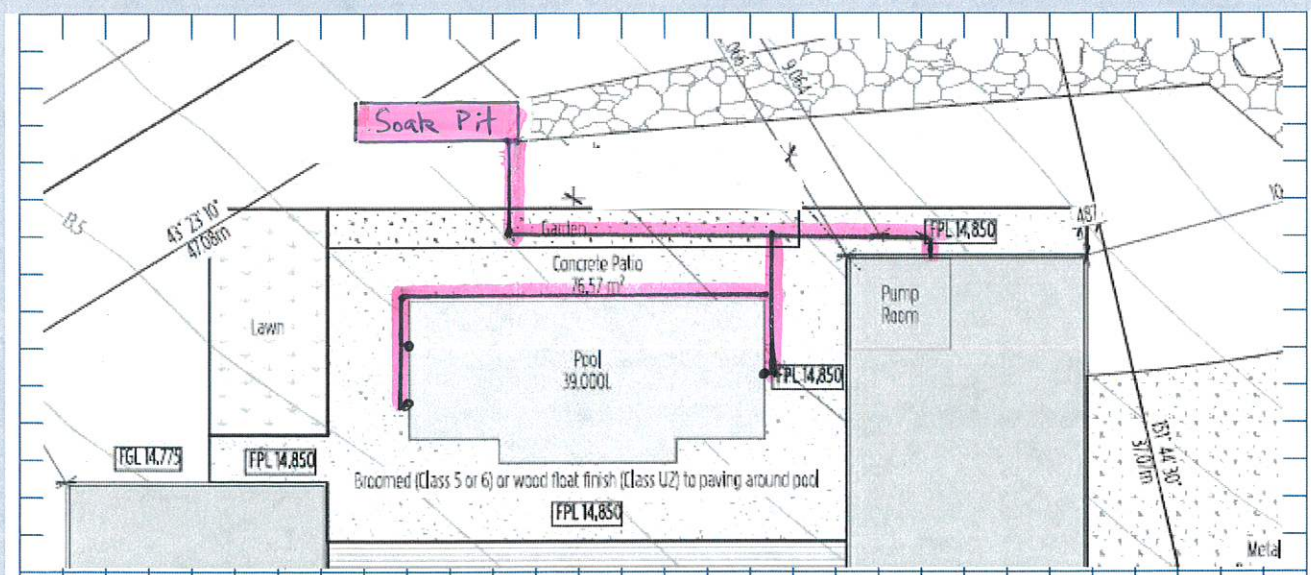

Memorandum from Licensed Building Practitioner

Record of Building Work

Section 88, Building Act 2004

GERARD CERTIFIED ROOFER

BC 210441

The Building Bruce and Linda Kendall

Street Address: 81 The Sanctuary		
Suburb:	Town/City: Mangawhai	Postcode: 0573

External Moisture Management System

Work that is restricted building work	Description of restricted building work	Carried out or supervised?
☑ Roof cladding or roof cladding system	Installation of Gerard Roofs pressed steel tiles and accessories per manufacturer's specification.	☐ Carried out ☑ Supervised

Issued By

Name and contact details of the licensed building practitioner who is licensed to carry out or supervise restricted building work

Name: Lucas Hardwick		LBP Number: BP 131196
Class(es) licensed in: Roofing R2 R3		
Address: Po Box 4282		Phone: 027 478 4459
Suburb: Kamo		Fax:
Town/City: Whangarei	Postcode: 0141	Mobile:
Mailing Address: ☐ Same as above?		After Hours Phone:
Suburb:		
Town/City:	Post Code:	
Email Address: johnduffroofing@gmail.com		
Website:		

Declaration

I carried out or supervised the restricted work recorded on this form.

Name	Signature	Date
Lucas Hardwick	Lucas Hardwick	22/12/2021

KAIPARA DISTRICT

Kaipara te Oranganui • Two Oceans Two Harbours

KAIPARA DISTRICT COUNCIL

Producer Statement Construction (PS3)

Construction

ISSUED BUILDING CONSENT NUMBER BC 210441

THIS PS3 IS ISSUED BY: John Duff Roofing

TO: **KAIPARA DISTRICT COUNCIL**

IN RESPECT OF: Bruce and Linda Kendall

AT (Address): 81 The Sanctuary Mangawhai

LEGAL DESCRIPTION - LOT.....DP .....SO .....

FROM: Luke Hardwick (Installer),

LICENSED BY John Duff Roofing Reg./License No: BP 131196

engaged by.....(Owner/Builder)

In respect of clause(s) B1 and B2 of the Building Regulations 1992 for the building work described by the drawings and specifications prepared by the design firm titled;

Battens fixed as per consented plans

numbered.....

authorised variation(s).....(copies attached)

have been issued during the course of the works.

I have sighted the issued building consent and read the conditions. As the contractor/builder I can confirm that the building works have been carried out in accordance with the requirements of the New Zealand Building Code, the conditions of the building consent, the design drawings and specifications and in accordance with the listed variations (if any).

I understand that if this producer statement is accepted, that it may be used to verify that the building work All / Part only as specified in the attached particulars, the subject of this building consent meets, based on reasonable grounds, the requirements of this building consent and the requirements of the Building Code in respect to clauses B1, B2, ...of the Building Regulations 1992.

☑ I understand and accept that Council may rely on this document, for the purposes of establishing compliance with the above building consent and that the content including the signature, whether electronic or not, is truly representative and authoritative of the information contained.

Name: Luke Hardwick Signature [signature] Date: 22/12/2021

Address: PO Box 4282 Kamo

Contractor/Applicator: John Duff Roofing

Telephone: .....(bus) 027 478 4459 (home) Fax .....

File: 3117.03

Form 6A

Memorandum from licensed building practitioner: Record of building work

Section 88, Building Act 2004

Please fill in the form as fully and correctly as possible.
If there is insufficient room on the form for requested details, please continue on another sheet and attach the additional sheet(s) to this form.

THE BUILDING		
Street address:	52 Robert Hastie Drive, Sanctuary	
Suburb:	Mangawhai	
Town/City:	Northland.	Postcode: 0505

THE PROJECT	
Building consent number:	BC 210441.

THE OWNER(S)		
Name(s):	Linda & Dave Kendall	
Mailing address:	(81) (52 ~~Robert~~ Hastie Drive	
Suburb:	Mangawhai	PO Box/Private Bag:
Town/City:	Northland.	Postcode: 0505.
Phone number:	022 054 6523.	Email address: Linda.kendall@xtra.co.nz.

EXTERNAL MOISTURE MANAGEMENT SYSTEMS		
Work that is restricted building work	**Description of restricted building work**	**Carried out or supervised**
Tick ✓	If necessary, describe the restricted building work.	Tick ✓ whether you carried out the restricted building work or supervised someone else carrying out the restricted building work.
Damp proofing ☐ ✓	DPC to bottom plates.	○ Carried out ○ Supervised ✓
Roof cladding or roof cladding system ☐		○ Carried out ○ Supervised
Ventilation system (for example, subfloor or cavity) ☐ ✓	Good	○ Carried out ○ Supervised
Wall cladding or wall cladding system ☐		○ Carried out ○ Supervised
Waterproofing ☐		○ Carried out ○ Supervised
Other ☐		○ Carried out ○ Supervised

RECORD OF WORK THAT IS RESTRICTED BUILDING WORK

PRIMARY STRUCTURE

Work that is restricted building work	Description of restricted building work	Carried out or supervised
Tick ✓	If necessary, describe the restricted building work.	Tick ✓ whether you carried out the restricted building work or supervised someone else carrying out the restricted building work.
Foundations and subfloor framing ☐		○ Carried out ○ Supervised
Walls ☑	as per pla.	○ Carried out ✓ Supervised
Roof ☑	as per pla.	○ Carried out ✓ Supervised
Columns and beams ☑	as per pla.	○ Carried out ✓ Supervised
Bracing ☑	as per pla.	✓ Carried out ○ Supervised
Other ☑	Install Joinery as per pla.	○ Carried out ✓ Supervised

ISSUED BY

Name and contact details of the licensed building practitioner who is licensed to carry out or supervise restricted building work.

Name: Lance Vale	LBP number: 116916.
Class(es) licensed in: Carpentry.	
Plumbers, Gasfitters and Drainlayers registration number (if applicable):	
Mailing address (if different from below):	
Street address/Registered office: 52 Estuary Drive	
Suburb: Mangawhai.	Town/City: Mangawhai.
PO Box/Private Bag	Postcode:
Phone number:	Mobile: 021 2224833
After hours:	Fax:
Email address: lance@coastalhomesnz.co.nz	Website:

DECLARATION

I Lance Vale carried out or supervised the restricted building work recorded on this form.

Signature: _____

Date: 20/05/22.

KAIPARA DISTRICT
Kaipara te Oranganui • Two Oceans Two Harbours

KAIPARA DISTRICT COUNCIL

Private Utility Service As-Built Record

(Section 216, Building Act 2004)

Part A Consent Details (to be completed in all cases)

Building Consent Number 210441

Applicants Name .....

Applicants Mailing Address .....

.....

Site Address 53 Robert Hastie Drive Mangawhai.

Part B As Built Services Information (to be completed in relation to service provided, ticking each box as appropriate)

Wastewater - Pressure

(Pump Make/Model)_____

Connection Diameter	Pipe Material	Connection Type
☐ 40mm	☐ uPVC	☐ Public Utility Service Connection
☐ 50mm	☐ Vitrified Clay	☐ Septic Tank
☐ 80mm	☐ Concrete	☐ Other _____
☐ Other_____mm	☐ Other _____	

Wastewater - Gravity

Connection Diameter	Pipe Material	Connection Type
☐ 65mm	☑ uPVC	☐ Public Utility Service Connection
☐ 80mm	☐ Vitrified Clay	☐ Soak Hole
☑ 100mm	☐ Concrete	☐ Stream
☐ Other_____mm	☐ Other _____	☑ Other Septic

Wastewater - Disposal System Description

Septic Tank

Size: _____ litres

Type
- ☐ **Septic tank DECOMMISSIONED**
- ☐ Ecotank
- ☑ Biocycle

Effluent Field

Trench _____m

☐ Deep Soakhole

Depth _____m

Number of holes _____m

☐ Other _____

Sanitary Facilities

- ☐ Toilet Number_____
- ☐ Bidet Number _____
- ☐ Urinal Number _____

Waste Disposal Unit

- ☐ No
- ☐ Yes Type _____

Certification

I Kevin Wood. being

- ☐ Owner
- ☐ Occupier
- ☐ Craftsman plumber
- ☑ Registered drainlayer

Registration Number _____

Registration Number 14766

certify that this Private Utility Service As-Built Record is an accurate representation of the work carried out.

Kevin Wood
Signature

15-5-23.
Date

Stormwater

Pipe Diameter	Pipe Material	Connection Type
☐ 80mm	☑ uPVC	☐ Public Utility Service Connection
☑ 100mm	☐ Vitrified Clay	☑ Soak Hole
☐ 150mm	☐ Ductile Iron	☐ Stream
☐ 225mm	☐ Concrete	☐ Drain
☐ Other_____mm	☐ Other_____	☐ Other_____

Water Supply

Pipe Material - Cold

- ☐ uPVC
- ☐ Copper
- ☐ Polybutylene
- ☐ Other _____

Hot Water Cylinder

- ☐ High Pressure _____Litre
- ☐ Low Pressure _____Litre

Meter Type

Make _____Model_____

Pipe Material - Hot

- ☐ uPVC
- ☐ Copper
- ☐ Polybutylene
- ☐ Other _____

Diameter _____

Serial Number _____

Reading ☐☐☐☐☐☐☐☐ m³

(Quote all black figures inclusive of zeros only)

☐ **Note Part B As Built Services Information**

PART C: As Built Services Plan
(To be completed in all cases. If details are already noted on separate drawings then provide copies in duplicate as appropriate and attach to this sheet. Ensure that drawing numbers, etc, are noted below.)

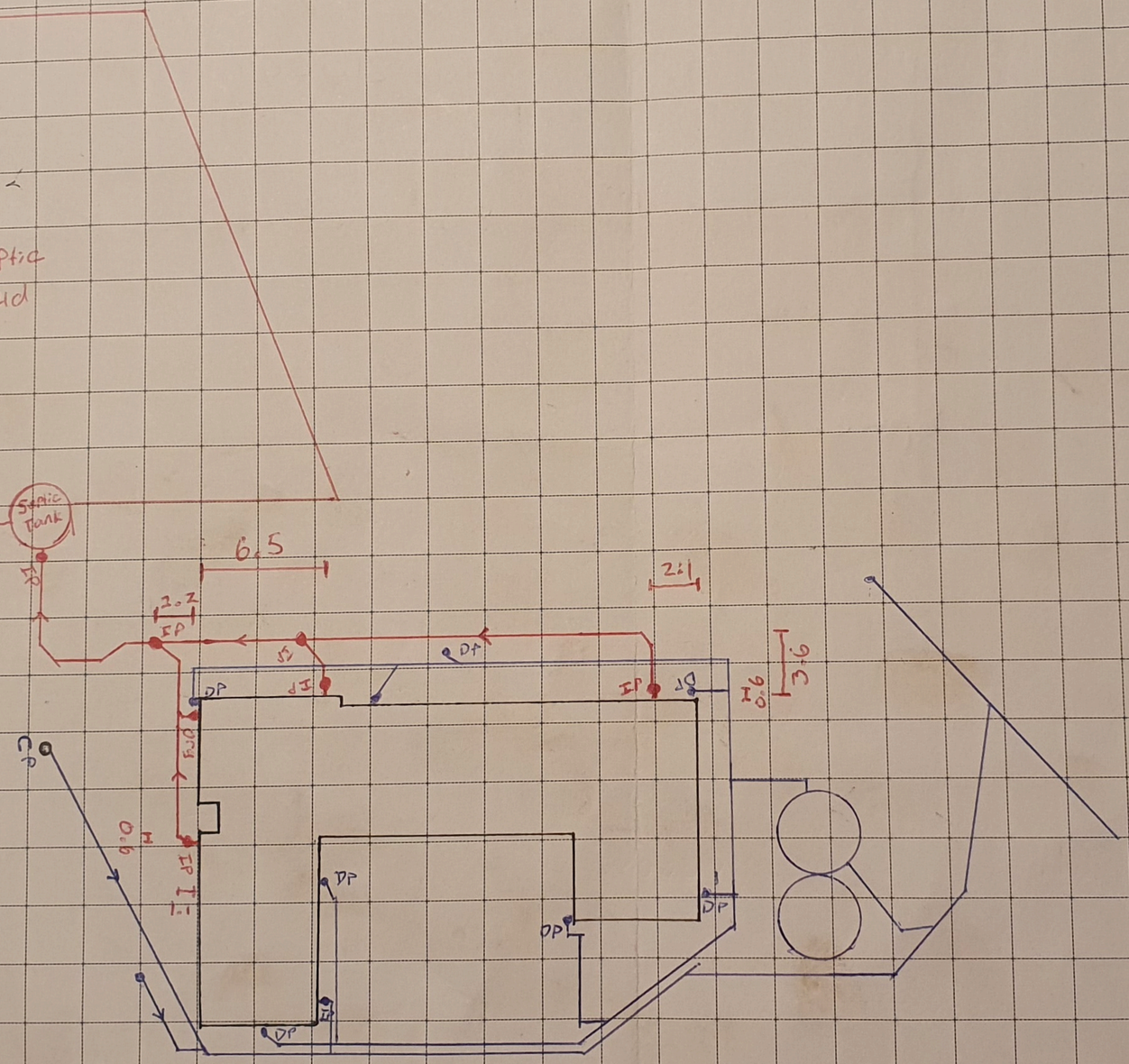

Scale: 1 in 300

Site Address: ~~53~~ 53 Robert Hastie Dr
Mangawhai

BC#210441

Please provide at least two measurements for each access point for future location

KAIPARA DISTRICT

Kaipara te Oranganui • Two Oceans Two Harbours

KAIPARA DISTRICT COUNCIL

Producer Statement Construction (PS3) - Drainage

Issued by: Kevin Wood being a Registered Certifying Drainlayer

In respect of installing drainage and the on-site wastewater disposal for:

(Owner) _____

At (Address) 53 Robert Hastie Drive
Mangawhai

Legal Description: Lot 81 DP _____ Valuation _____

I have sighted the issued Building Consent (BC 210441) and have constructed the drainage system including the pipes and fittings in accordance with the approved Building Consent, the New Zealand Building Code, and the manufacturers specifications and requirements.

I have tested the pipework and installed the system as follows:

☑ Installed an on-site effluent disposal system in accordance with AS/NZS 1547:2000 and provide a schedule to the owner for the systems maintenance.

☑ Has been installed in accordance with G13 (Foul Water) and G14 (Industrial Liquid Waste) and B2 (durability 15 years) of the Building Regulations 1992.

I believe on reasonable grounds that the work complies with the Building Consent issued.

I also understand that Kaipara District Council in accepting this Producer Statement Construction (PS3), will be relying on it to establish compliance at the completion of the building work.

☑ I understand and accept that Council may rely on this document, for the purposes of establishing compliance with the above building consent and that the content including the signature, whether electronic or not, is truly representative and authoritative of the information contained.

Signature of Registered Certifying Drainlayer: Kevin Wood

[redacted] Registration Number: 14366 [redacted] Reg Expiry Date: 31-3-23

Date: 15-5-22

File: 3117.0

PS.CD
Version 1
Issued 1 March 2014

KAIPARA DISTRICT

Kaipara te Oranganui • Two Oceans Two Harbours

KAIPARA DISTRICT COUNCIL

Producer Statement Water Proof Construction (PS3B)

Water Proof Construction

ISSUED BUILDING CONSENT NUMBER....210441.....

THIS PS3b IS ISSUED BY: ...Mark Maelzer.....

TO: **KAIPARA DISTRICT COUNCIL**

IN RESPECT OF: Linda and Dave Kendall

AT (Address): ...53 Robert Hastie Drive.....

.....Mangawhai.....

LEGAL DESCRIPTION - LOT 81 DP 556753 SO .....

FROM: Purecraft tiling Ltd (Water Proof membrane Applicator),

LICENSED BY Mapei Reg./License No: 2267

engaged by Coastal Homes (~~Owner~~/Builder)

In respect of clause(s) E2 and E3 and B2 of the Building Regulations 1992 for the building work described by the drawings and specifications prepared by the design firm titled;

.....

.....

.....

numbered.....

.....

I have sighted the issued building consent and sighted the waterproofing details and have inspected the substrate to which the membrane is to be applied and found it to be satisfactory. As a licensed water proof membrane applicator I can confirm that the application of the membrane has been carried out in accordance with the requirements of the New Zealand Building Code, the manufacturer's specifications and requirements.

I understand that if this producer statement is accepted, that it may be used to verify that the building work All / Part only as specified in the attached particulars, the subject of this building consent meets, the requirements of this building consent and the requirements of the Building Code in respect to clauses E2 and E3 and B2 of the Building Regulations 1992.

☑ I understand and accept that Council may rely on this document, for the purposes of establishing compliance with the above building consent and that the content including the signature, whether electronic or not, is truly representative and authoritative of the information contained.

Name: Mark Maelzer Signature: [signature] Date: 17/5/22

Address: 55 Nukuroa Rd, Topuni

Contractor/Applicator: Mark Maelzer

Phone: — (bus.) 0273104848 (home) Fax —

Please find attached the 15 year product and the 5 year workmanship warranties to the property owners.

File: 3117.03

Producer statement construction (PS3)
General construction work

All sections of this form must be completed

TO BE COMPLETED BY THE PERSON WHO HAS UNDERTAKEN THE BUILDING WORK

Author name:	Ryan O'Connor	Building consent No:	
Author company:	Warner Fencing	Author Registration No:	
Description of building work:	Warner Glass Pool Fencing & Clutha Pool Fencing		
Performance standard for maintenance and inspection, if applicable	☐ N/A		
Legal description:	Pool Fencing		
Site address:	53 Robert Hastie Drive, Mangawhai		

NZBC clauses: (select as applicable)

B1 ✔	B2 ✔	C1	C2	C3	C4	C5	C6	D1	D2	E1	E2	E3
F1	F2	F3	F4	F5	F6	F7	F8	G1	G2	G3	G4	G5
G6	G7	G8	G9	G10	G11	G12	G13	G14	G15	H1		

I have sighted the above building consent and read the attached conditions of consent and confirm that I have undertaken the building work described above in accordance with the consented plans and specifications.

I understand that Council will rely upon this producer statement, for the purposes of establishing compliance with the above building consent.

Signature:  Date: 20/5/2022

Tradesperson's contact details:

Address:	15 Taylors Road, Morningside Postcode: 1025		
Business:	Warner Fencing	Fax:	
Mobile:	0275183930	Email	ryan@warnerfencing.co.nz

COUNCIL USE ONLY

☐ Central ☐ Henderson ☐ Manukau ☐ Orewa ☐ Papakura ☐ Pukekohe ☐ Takapuna

☐ Accepted in support of inspection ☐ Accepted instead of inspection

Register checked: Council ☐ LBP ☐ N/A ☐

Name: Date:

Producer statement accepted as establishing compliance with the consented plans: YES ☐ NO ☐

Producer statements are accepted solely at Auckland Council's discretion; please refer to the Producer Statement Policy which can be found on Councils website for further details

http://www.aucklandcouncil.govt.nz/EN/ratesbuildingproperty/consents/Consent%20documents/ac2301producerstatementpolicy.pdf

PRODUCER STATEMENT PS1

WANAKA GLASS POOL FENCING



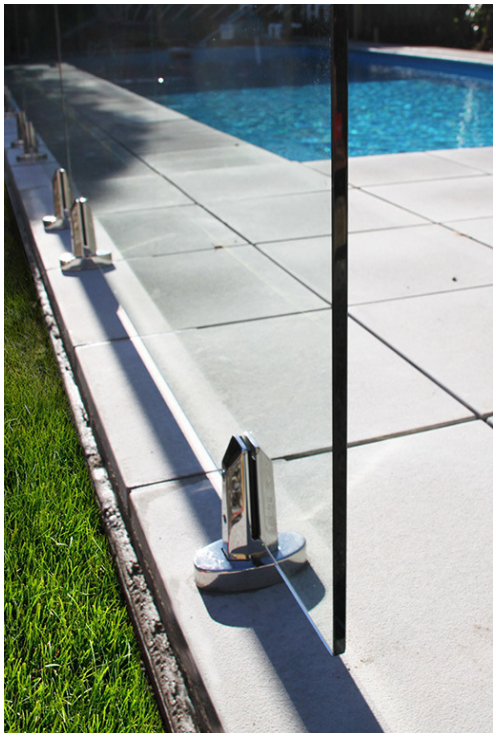

WARNER.

Fences • Path & driveway gates • Auto-gate openers • Balustrades

IPENZ ENGINEERS NEW ZEALAND | NEW ZEALAND INSTITUTE OF ARCHITECTS INCORPORATED | ACENZ

Building Code Clause(s) B1,B2,F2 ,F9

PRODUCER STATEMENT – PS1 – DESIGN

(Guidance notes on the use of this form are printed on page 2)

ISSUED BY: P&P CONSULTING ENGINEERS LIMITED
(Design Firm)

TO: WARNER FENCING & GATES LIMITED
(Owner/Developer)

TO BE SUPPLIED TO: RELEVANT COUNCIL
(Building Consent Authority)

IN RESPECT OF: SWIMMING POOL FENCE SUPPORTED BY WANAKA SPIGOTS
(Description of Building Work)

AT: VARIOUS SITES
(Address)

LOT ..... **DP** ..... **SO** .....

We have been engaged by the owner/developer referred to above to provide STRUCTURAL DESIGN services in respect of the requirements of
(Extent of Engagement)

Clause(s) B1, B2, F2 of the Building Code for
All ☐ or Part only ☑ (as specified in the attachment to this statement), of the proposed building work.

The design carried out by us has been prepared in accordance with:

☑ Compliance Documents issued by the Ministry of Business, Innovation & Employment B1/VM1 & GLASS TESTING or
(verification method / acceptable solution)

☐ Alternative solution as per the attached schedule

The proposed building work covered by this producer statement is described on the drawings titled WARNER FENCING & GATES and numbered REF: 13/243/ds & ENG 01;
together with the specification, and other documents set out in the schedule attached to this statement.

On behalf of the Design Firm, and subject to:

(i) Site verification of the following design assumptions REFER NOTES AT END OF DESIGN SUMMARY

(ii) All proprietary products meeting their performance specification requirements;

I **believe on reasonable grounds** that a) the building, if constructed in accordance with the drawings, specifications, and other documents provided or listed in the attached schedule, will comply with the relevant provisions of the Building Code and that b), the persons who have undertaken the design have the necessary competency to do so. I also recommend the following level of construction monitoring/observation:

☐CM1 ☐CM2 ☐CM3 ☐CM4 ☐CM5 (Engineering Categories) or ☐ as per agreement with owner/developer (Architectural)

I, MR. P PRAKASH am: ☑CPEng 251801 #
(Name of Design Professional)

☐Reg Arch ..... #

I am a Member of : ☑ IPENZ ☐NZIA and hold the following qualifications: B.E. (Civil), CPEng

The Design Firm issuing this statement holds a current policy of Professional Indemnity Insurance no less than $200,000*.

The Design Firm is a member of ACENZ: ☐

SIGNED BY MR. P PRAKASH ON BEHALF OF P&P CONSULTING ENGINEERS LTD
(Design Firm)

Date 13/10/2021 (signature)

Note: This statement shall only be relied upon by the Building Consent Authority named above. Liability under this statement accrues to the Design Firm only. The total maximum amount of damages payable arising from this statement and all other statements provided to the Building Consent Authority in relation to this building work, whether in contract, tort or otherwise (including negligence), is limited to the sum of $200,000.*

This form is to accompany **Form 2 of the Building (Forms) Regulations 2004** for the application of a Building Consent.

THIS FORM AND ITS CONDITIONS ARE COPYRIGHT TO ACENZ, IPENZ AND NZIA

WARNER.

Fences • Path & driveway gates • Auto-gate openers • Balustrades

FRAMELESS GLASS SWIMMING POOL FENCE SUPPORTED BY WANAKA SPIGOTS

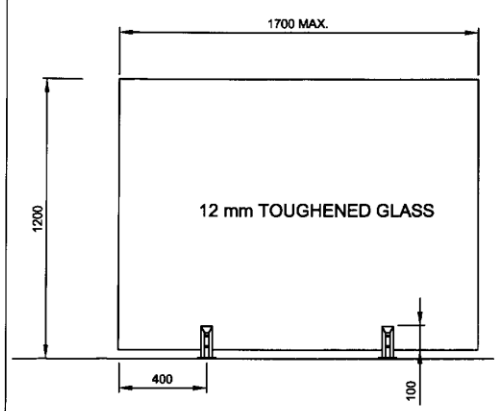

MEDIUM WIND ZONE

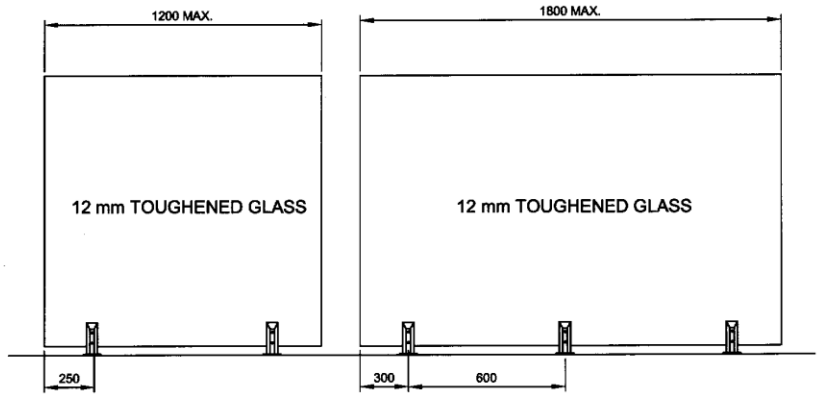

HIGH WIND ZONE

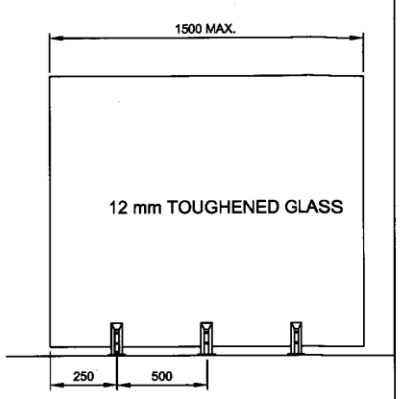

VERY HIGH WIND ZONE

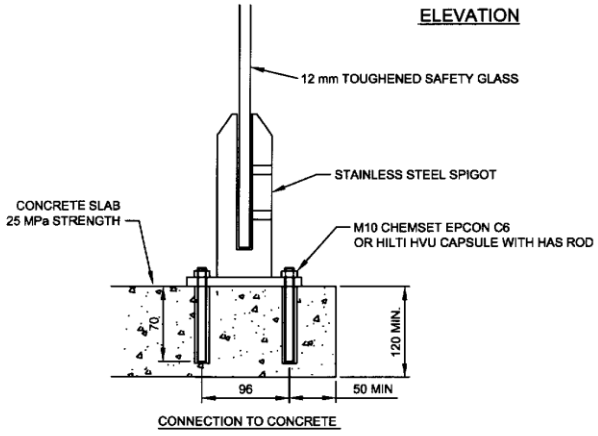

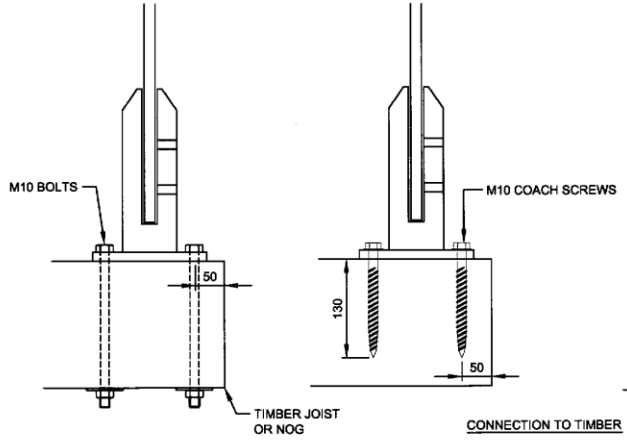

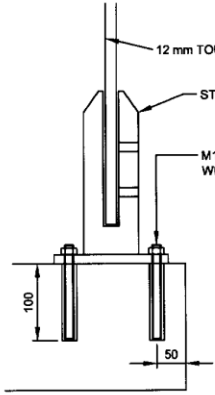

NOTES:

FIXINGS:
1. ALL ANCHORS MUST BE INSTALLED IN ACCORDANCE WITH MANUFACTURERS REQUIREMENTS.
2. BOLTING ARRANGEMENT MUST COMPLY WITH RELEVANT MATERIAL CODES.
3. STRENGTH & STIFFNESS OF THE SUBSTRATE STRUCTURE MUST BE SUFFICIENT FOR THE LOADS - THIS MUST BE SPECIFICALY CHECKED BY OTHERS FOR EACH SITUATION.
4. ALL FIXINGS TO BE STAINLESS STEEL.

P & P CONSULTING ENGINEERS LTD Civil and Structural Engineering 6A Montel Avenue, Henderson ph: 836-1853	WARNER FENCING & GATES LTD	Scales N.T.S	Project 13/243
	GLASS FENCE SUPPORTED BY STAINLESS STEEL SPIGOTS	Drawn PP / Date 6-3-14	Sheet ENG 01

WARNER.

Fences • Path & driveway gates • Auto-gate openers • Balustrades

2A

WARNER.

Fences • Path & driveway gates • Auto-gate openers • Balustrades

Maximun glass spans and spigot requirements for the Wanaka spigot

Glass Height	Glass Width	Windzones		
		Medium 32-37 M/S	High 37-44 M/S	Very High - 44-50 M/S
1160	1000	2 Spigots	2 Spigots	2 Spigots
1160	1050	2 Spigots	2 Spigots	2 Spigots
1160	1100	2 Spigots	2 Spigots	2 Spigots
1160	1150	2 Spigots	2 Spigots	2 Spigots
1160	1200	2 Spigots	2 Spigots	2 Spigots
1160	1250	2 Spigots	2 Spigots	2 Spigots
1160	1300	2 Spigots	2 Spigots	2 Spigots
1160	1350	2 Spigots	2 Spigots	3 Spigots
1160	1400	2 Spigots	2 Spigots	3 Spigots
1160	1450	2 Spigots	2 Spigots	3 Spigots
1160	1500	2 Spigots	2 Spigots	3 Spigots
1160	1550	2 Spigots	2 Spigots	3 Spigots
1160	1600	2 Spigots	2 Spigots	3 Spigots
1160	1650	2 Spigots	2 Spigots	3 Spigots
1160	1700	2 Spigots	2 Spigots	3 Spigots
1160	1750	2 Spigots	3 Spigots	3 Spigots
1160	1800	2 Spigots	3 Spigots	3 Spigots
1160	1850	2 Spigots	3 Spigots	3 Spigots
1160	1950	2 Spigots	3 Spigots	3 Spigots
1160	2000	2 Spigots	3 Spigots	3 Spigots

94 Vickery Street, Te Rapa, Hamilton 3200 | p 07 850 9093 | f 07 850 9026 | m 027 509 8425
waikato@warnerfences.co.nz | www.warnerfences.co.nz

WARNER.

Fences • Path & driveway gates • Auto-gate openers • Balustrades

AZUMA Design

NATA Accredited Laboratory No: 15147

NATA WORLD RECOGNISED ACCREDITATION

HINGE TEST REPORT

Model No. / Name: Magna Close Safety Hinge

AZT Number: AZT0113.09

Customer: Glass FX Frameless Glass Solutions

Date of Test: 14th July 2009 – 21st July 2009

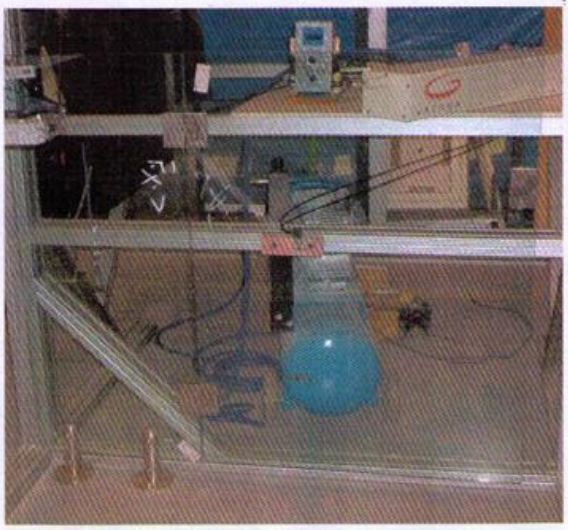

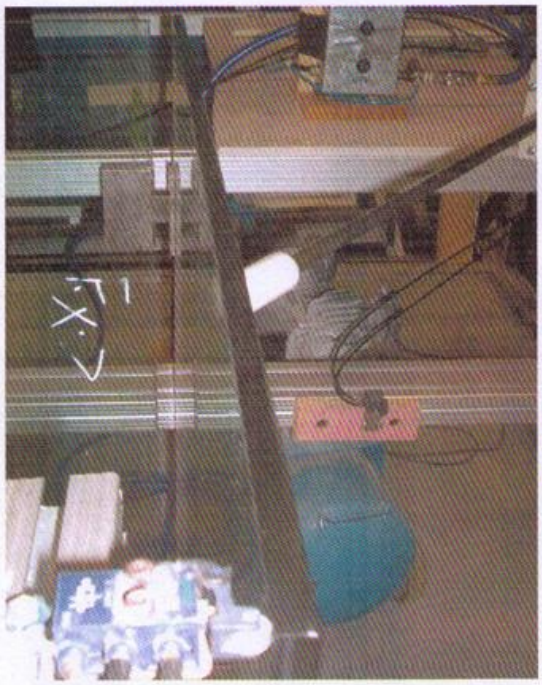

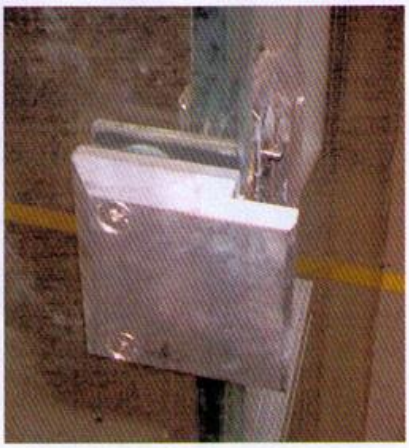



Address: 160 Newton Rd Wetherill Park NSW 2164 Australia **PH:** 61(02)9604 0255 **FAX:** 61(02)9604 0466

WARNER.
Fences • Path & driveway gates • Auto-gate openers • Balustrades

Latch

Applicable Standard: AS 1926.1 Clause 2.4.2
Test Method: Visual and dimensional and Figure 2.9

COMPLIES

Test requirement	Observation
The following is applicable when the gate is installed to the manufacturer's instructions and requirements.	
2.4.2.1 General Gates shall be fitted with a latch that will automatically operate on the closing of the gate and will prevent the gate from being re-opened without being manually released. The gate shall not be able to be:	The latch prevented the gate from being re-opened without being manually released.
Inadvertently adjusted during operation	Cannot be adjusted
Locked in the "open " position	Cannot be locked open
Adjusted without the use of tools	Not adjustable without use of tools
A latch shall not be able to be released by insertion of any implement in the 10mm opening shown in Figure 2.9	Cannot be opened through insertion of an implement through the opening.
2.4.2.2 Location Where the release point of the latch is located at a height less than 1500mm above the finished ground level, the location of the latch shall:	
Not be on the outside of the barrier	Latch is located on the inside of the barrier when installed in accordance with the manufacturer's installation instructions.
Be in such a position that to release the latch from the outside it will be necessary to reach over or through the barrier at a height of not less than 1200mm above the finished ground level or not less than 1000mm above the highest lower horizontal member.	Height is 1200mm above the finished ground when installed in accordance with the manufacturer's installation instructions.
Be at least 150mm below the top of the barrier if a hand-hole is not provided, or at least 150 mm below the edge of any hand-hole if provided.	No hand hole is provided
2.4.2.3 Shielding of the latch In a gate with vertical openings greater than 10mm, where the latch is located at a height less than 1500 mm above the finished ground level, the latch release shall be shielded so that no opening greater than 10mm occurs within the bounded area as shown in Figure 2.9	The vertical opening is less than 10mm

94 Vickery Street, Te Rapa, Hamilton 3200 | p 07 850 9093 | f 07 850 9026 | m 027 509 8425
waikato@warnerfences.co.nz | www.warnerfences.co.nz

WARNER.

Fences • Path & driveway gates • Auto-gate openers • Balustrades

Product Tested

Manufacturer:	Glass Outlet
Brand:	Master Range
Model Nos:	Not provided
Model Name:	Master Range Glass Gate Installation Kit
Description:	Master Range Inline & Hinges with 8mm thick 890mmW x 1200mmH glass gate fitted with D&D side pull latch kit.

Queensland Testing Laboratory Pty Ltd — Test Report: 132647 3248

Component Description

Sample Number	Description	Photo / Product / Component
3427	Side pull glass gate latch kit	

WARNER.

Fences • Path & driveway gates • Auto-gate openers • Balustrades

CODE: 12NPG-0800
DESCRIPTION: 12mm Polaris Glass Gate, 800 x 1160mm

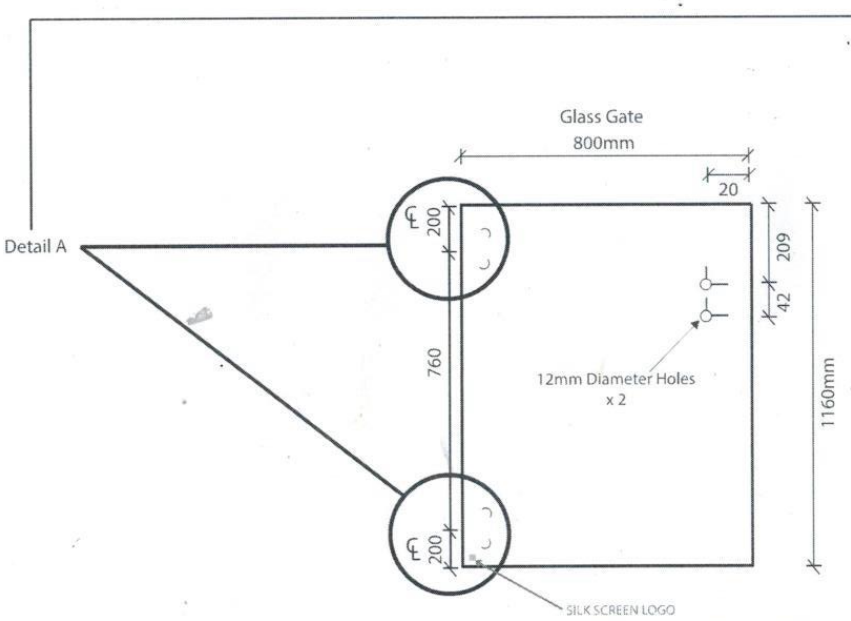

Not To Scale

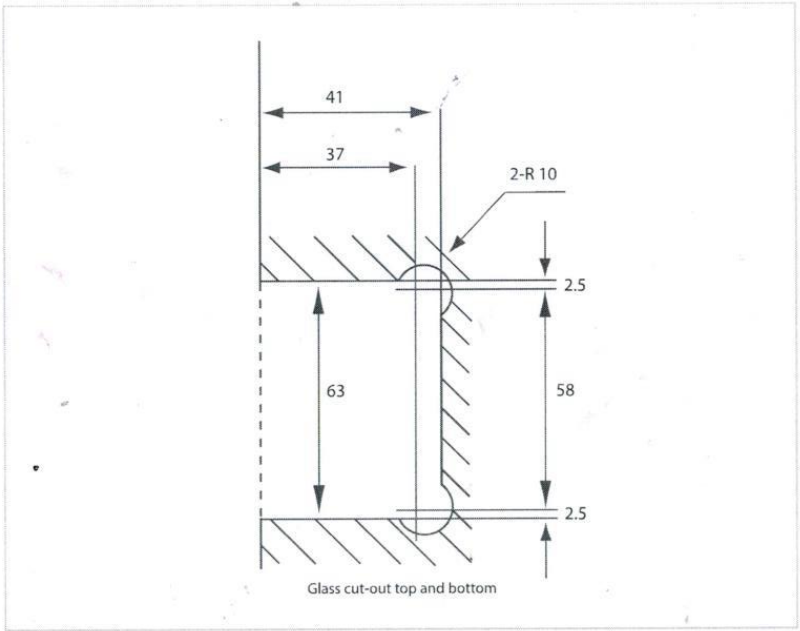

Detail A

Not To Scale

Glass Gate Specification:

- 12mm Thick Clear Toughened Glass
- 12mm Diameter Holes x 2
- 5mm Radius Corners
- 2 x Cut Outs As Per Detail A
- Flat Polish All Sides
- ℄ - Centre Line

P & P CONSULTING ENGINEERS LTD

Civil and Structural Engineering

Mr P. Prakash (Director)
B.E. (Civil), CPEng, MIPENZ
Mr J. Dela Cruz
B.E. (Civil), GIPENZ
Mr M. Ormeno
B.E. (Civil), Ph.D., GIPENZ
Dr. H.D.W. FENDALL (Consultant)
B.E. (Civil) Hons., Ph.D., CPEng, MIPENZ

6A Montel Avenue,
Henderson,
AUCKLAND, 0612
Ph. & Fax 09-836-1853
parmil@pnpltd.co.nz
joel@pnpltd.co.nz
miguel@pnpltd.co.nz

Ref: 12/170/ds2
02/09/2021

WARNER FENCING & GATES LTD

ALUMINIUM SWIMMING POOL FENCE

DESIGN CALCULATIONS SUMMARY

INDEX **PAGE**

1. **Producer Statement - Design** 1

2. **General** 2

3. **Design of Aluminium Fence** 3

3.1 **Vertical Rails** 3

Use 6063-T6 Ø16 mm x 1.2 mm thick Aluminium Vertical Rails @ 90 mm max centres, 1.2 m max span.

3.2 **Top Rails** 5

Use 6063-T6 25 mm deep x 38 mm wide x 1.5 mm thick Aluminium Top Rails with max clear span of 2450 mm.

3.3. **Posts** 6

Use 6063-T6 50 mm deep x 50 mm wide x 2.0 mm thick Aluminium posts at max spacing of 2.5 m.

3.4. **Footing** 6

Use 250 mm Diameter x 900 mm min deep concrete footing.

Min concrete strength to be 20 MPa or 25 MPa if within sea spray zone.

Assumed Undrained Shear Strength is 50 kPa.

3.5 With Base Plate Option 8

Use 6063-T6 135 mm x 100 mm x 10 mm thick Aluminium Base Plate.

Use 4 / M10 Chemset Anchor Studs Grade A4/316 SS with Epcon C6 Series. Drilled hole depth to be 80 mm minimum into concrete. Other requirements are as follows:

Minimum Substrate (Concrete) Thickness = 100 mm
Minimum Concrete Edge Distance = 50 mm.
Minimum Spacing = 60 mm

3.6 With coach screws option 10

Use 4 / M10 coach screws. 150 mm minimum penetration

Refer to Drawing S01 – S04 for reference.

Notes:

1. Any parts of the structure which are not covered by the specific design included with these calculations must comply either with the New Zealand Building Code or specific design as detailed by others. Any exceptions to this should be referred back to this Design Office.

2. The above calculations include structural work for which a Building Consent must be obtained prior to building. It is the Owner's responsibility to obtain all necessary consents.

3. This design assumes that all the specified members are suitably protected from excess moisture in accordance with Section E1, E2 and E3 of the Building Code. All timber, steelwork, bolts and fasteners to be corrosion protected in accordance with the requirements of NZS 3604:2011 Chapter 4, Durability.

4. All aluminium surfaces shall be painted where the structures are to be exposed to extremely corrosive conditions and where the aluminium alloy parts are in contact with, or are fastened to, steel members or other dissimilar materials.

5. Painting procedure must be in accordance with AS/NZS 1664.

6. All welding shall be done in accordance with AS1665.

Building Code Clause(s) B1

PRODUCER STATEMENT – PS1 – DESIGN

(Guidance on use of Producer Statements (formerly page 2) is available at www.engineeringnz.org)

ISSUED BY: P & P CONSULTING ENGINEERS LTD
(Design Firm)

TO: HARCO (HARKNESS & YOUNG LTD)
(Owner/Developer)

TO BE SUPPLIED TO: VARIOUS COUNCILS
(Building Consent Authority)

IN RESPECT OF: ALUMINIUM SWIMMING POOL FENCE
(Description of Building Work)

AT: VARIOUS SITES
(Address)

Town/City:..... **LOT**..... **DP**..... **SO**.....
(Address)

We have been engaged by the owner/developer referred to above to provide:

STRUCTURAL DESIGN OF ALUMINIUM SWIMMING POOL FENCES

(Extent of Engagement)

services in respect of the requirements of Clause(s) B1 of the Building Code for:

☐ All or ■ Part only (as specified in the attachment to this statement), of the proposed building work.

The design carried out by us has been prepared in accordance with:

■ Compliance Documents issued by the Ministry of Business, Innovation & Employment B1/VM1,VM4 or
(verification method/acceptable solution)

☐ Alternative solution as per the attached schedule

The proposed building work covered by this producer statement is described on the drawings titled:

HARCO - ALUMINIUM SWIMMING POOL FENCES and numbered 12/170/DS2, S01-S04;
together with the specification, and other documents set out in the schedule attached to this statement.

On behalf of the Design Firm, and subject to:
(i) Site verification of the following design assumptions REFER NOTES AT END OF DESIGN CALCULATIONS
(ii) All proprietary products meeting their performance specification requirements;

I believe on reasonable grounds that a) the building, if constructed in accordance with the drawings, specifications, and other documents provided or listed in the attached schedule, will comply with the relevant provisions of the Building Code and that b), the persons who have undertaken the design have the necessary competency to do so. I also recommend the following level of construction monitoring/observation:

☐ CM1 ☐ CM2 ☐ CM3 ☐ CM4 ☐ CM5 (Engineering Categories) or ☐ as per agreement with owner/developer (Architectural)

I, PARMIL PRAKASH am: ■ CPEng 251801 # ☐ Reg Arch ..... #
(Name of Design Professional)

I am a member of: ■ Engineering New Zealand ☐ NZIA and hold the following qualifications: BE (Civil), CPEng
The Design Firm issuing this statement holds a current policy of Professional Indemnity Insurance no less than $200,000*.
The Design Firm is a member of ACENZ: ☐

SIGNED BY PARMIL PRAKASH (Signature)
(Name of Design Professional)

ON BEHALF OF P & P CONSULTING ENGINEERS LTD Date 02/09/2021
(Design Firm)

Note: This statement shall only be relied upon by the Building Consent Authority named above. Liability under this statement accrues to the Design Firm only. The total maximum amount of damages payable arising from this statement and all other statements provided to the Building Consent Authority in relation to this building work, whether in contract, tort or otherwise (including negligence), is limited to the sum of $200,000.*

This form is to accompany **Form 2 of the Building (Forms) Regulations 2004** for the application of a Building Consent.

THIS FORM AND ITS CONDITIONS ARE COPYRIGHT TO ACENZ, ENGINEERING NEW ZEALAND AND NZIA

P & P CONSULTING ENGINEERS LTD

Civil and Structural Engineering

Mr P. Prakash (Director)
B.E. (Civil), CPEng, MIPENZ
Mr J. Dela Cruz
B.E. (Civil), GIPENZ
Mr H. Yin
B.E. (Civil), GIPENZ
Dr. H.D.W. FENDALL (Consultant)
B.E. (Civil) Hons., Ph.D., CPEng, MIPENZ

6A Montel Avenue,
Henderson, AUCKLAND,
0612
Ph. & Fax 09-836-1853
parmil@pnpltd.co.nz
joel@pnpltd.co.nz
hansen@pnpltd.co.nz

02/09/2021

Ref: 12/170

TO WHOM IT MAY CONCERN

Dear Sir/Madam,

B2 COMPLIANCE

Producer Statement for Design-PS1 for Clause B2 of the Building Code – Structural Durability.

We are not able to provide this because there is no effective verification method for B2 contained within the Building Code.

However we can confirm that for the structural elements shown on our documentation:

Timber
Timber treatment has been selected in accordance with Table 1A of B2/AS1.

Concrete
Concrete cover have been selected in accordance with NZS3101:2006, Part 1 Section 3.

Mild Steel
Steel protection has been specified in accordance with the “Guide to the protection of structural steel against atmospheric corrosion by the use of protective coatings” AS/NZS3212. We Note that this is on a time to first maintenance basis.

We trust this provides the information that you are seeking.

Yours faithfully,

Mr P Prakash
Director
P & P Consulting Engineers Limited

2. GENERAL

The following will be used for the design of proposed pool fence

Use	AS / NZS 1170:2002	Loadings Code
	NZS 8500:2006	Safety Barriers and Fences Around Swimmng Pool
	NZS 3404:1997	Structural Steel
	NZS 3101:2006	Concrete

LOADS

Live Loads — Consider 0.25 kN point load to all structural components

Wind Loads — Consider Very High Wind Zone

Vu = 50 m/s

q = 1.50 kPa (ULS)

P & P CONSULTING ENGINEERS LTD Civil and Structural Engineering 6A Montel Avenue, Henderson ph: 836-1853	Project: Harco/ Alum Swimming Pool Fences	Job No. 12/170	Sheet 3 of
	Designed: PP/JD		Date: Aug 2012

3. DESIGN of ALUMINIUM FENCE

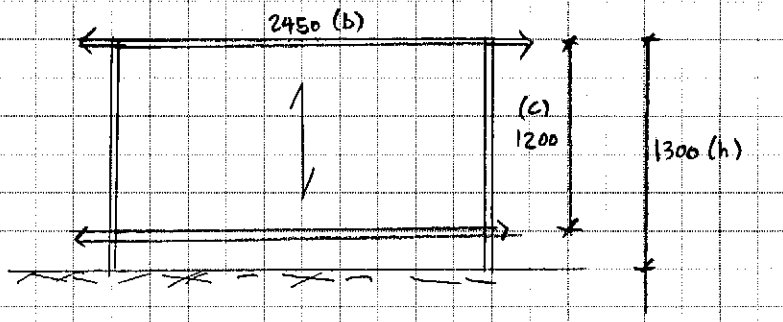

c/h = 0.92
b/c = 2 (1 panel)
= 5 (> 1 panel)

Wind Load : Very High
q_u = 1.5 kPa

Consider wind on individual members : Cd = 1.2 for circular & square sections

3.1 VERTICAL RAILS

Spacing = 90 mm max. crs

Span = 1200 − 25×2 = 1150 mm

LOADING		MOMENT, M^*
1.5Q	1.5 × 0.5 kPa = 0.75 kPa	$M^* = (0.75)(0.09)(1.2)^2/8 = 0.012$ kNm
	1.5 × 0.25 kN × 50% = 0.1875 kN	$M^* = (0.1875)(1.2)/8 = \underline{0.027 \text{ kNm}}$ ← governs
Wu	1.5 kPa × 1.2 × 0.16 = 0.029 kN/m	$M^* = (0.029)(1.2)^2/8 = 0.005$ kNm

↑ (V_{max} = 50 m/s)
→ Very High Wind

Say both ends fixed

Provided Section : ϕ16 × 1.2 mm (6063-T5) Aluminium

Elastic Section Modulus, $Z = \dfrac{\pi[(16)^4 - (13.6)^4]}{32(16)} = 192.21 \text{ mm}^3$

Plastic Section modulus, $S = \dfrac{d^3 - d_i^3}{6} = 263.42 \text{ mm}^3$



d_i = 16 − 2×1.2 mm
= 13.6 mm

P & P CONSULTING ENGINEERS LTD
Civil and Structural Engineering
6A Montel Avenue, Henderson ph: 836-1853

Project: Harco/ Alum Swimming Pool Fences | Job No. 12/170 | Sheet 4 of
Designed: PP/JD | Date: Aug 2012

USING 6063 - T5

As per AS/NZS 1664 : 1997 Sect. 3.4.4 (Tension - Round Tubes)

$\phi F_L = 1.17\, \phi_y F_{ty} = (1.17)(0.95)(110) = 122.3$ MPa ← governs
$\phi F_L = 1.24\, \phi_u F_{tu}/k_t = (1.24)(0.85)(152)/1.0 = 160.2$ MPa

Using 6063 -T5 Material
$F_{ty} = 110$ MPa
$F_{tu} = 152$ MPa
$k_t = 1.0$

MOMENT CAPACITY of THE SECTION PROVIDED

$f_b = \phi M / Z$ or S ; $\phi M = (\phi F_L)(Z$ or $S)$

ϕM_Z (elastic) = 0.0235 kNm < M^* NOT ok'
ϕM_S (plastic) = 0.0322 kNm

USING 6063 -T6

$F_{ty} = 172$ MPa
$F_{tu} = 207$ MPa
$k_t = 1.0$

$\phi F_L = (1.17)(0.95)(172) = 191.2$ MPa ← governs
$= (1.24)(0.85)(207)/1 = 218.2$ MPa

MOMENT CAPACITY : $\phi M = (\phi F_L)(Z$ or $S)$

ϕM_Z (elastic) = 0.0367 kNm > M^*
ϕM_S (plastic) = 0.0504 kNm > M^*

Use 6063 - T6 ϕ16mm x 1.2mm thick Aluminium Vertical Rails @ 90mm max. crs. (1.2m max. span)

P & P CONSULTING ENGINEERS LTD
Civil and Structural Engineering
6A Montel Avenue, Henderson ph: 836-1853

Project | Job No. | Sheet 5 of

Designed: Mr P. Prakash | Date

3.2 TOP RAILS

Section = 25 x 38 x 1.5mm

Span = 2.5m

Z = 1473.8 mm^3

S = 1702.5 mm^3

Loads :

Wind Load from Infill : $1.5\ kPa \times 1.2 \times 0.016 \times \frac{1.2}{2} = 0.017$ kN/rail

kN/m = $0.017 / 0.1 = 0.17$ kN/m

on rail = $1.5 \times 1.2 \times 0.025 = 0.045$ kN/m

Total = 0.215 kN/m

BM = $\frac{1}{8} \times 0.215 \times 2.5^2 = 0.17$ kNm

Live load : Consider 0.25 kN @ mid span

BM = $0.25 \times 1.5 \times \frac{2.5}{4} = 0.23$ kNm

Using 6063 - T6

ϕF_L = $0.95 \times 172 = 163$ MPa

$= 0.85 \times \frac{201}{1} = 175$ MPa

moment capacity = $\phi M = \phi F_L (Z \text{ or } S)$

ϕM_Z = 0.24 kNm ✓ OK

ϕM_S = 0.28 kNm ✓ OK

→ Use 6063-T6 25mm deep x 38mm wide x 1.5mm thick Top Rails

P & P CONSULTING ENGINEERS LTD
Civil and Structural Engineering
6A Montel Avenue, Henderson ph: 836-1853

Project	Job No.	Sheet 6 of
Designed: Mr P. Prakash		Date

3.3 Posts

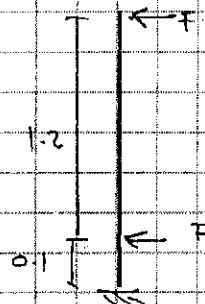

Section = 50×50×2 SHS

Spacing = 2.5m

Z = 5393 mm³

S = 6399.8 mm²

F = 0.215 × 2.5 = 0.54 kN (wind)

Φ = 0.25 × 1.5 = 0.38 kN

Bm = (0.54 × 0.1) + (0.54 × 1.3) = 0.76 kNm

Using 6063-T6

ϕF_L = 163 MPa, ϕM = (ΦFL)(Z or S)

ϕM_2 = 0.881 kNm ✓ OK

ϕM_3 = 1.05 kNm ✓ OK

→ Use 6063-T6 50 × 50 × 2 SHS Aluminium post at 2.5 m centres.

3.4 Footing

Mo base = 0.76 kNm

Ve base = 1.1 kN

eff. load ht = M/V = 0.69 m

Refer PGC 7

→ Use 250 mm ϕ × 900 mm deep concrete footing

Assumed S_u = 50 kPa

Concrete strength = 20 MPa (25 MPa within sea spray zone)

(7)

LATERALLY LOADED POLES - Ultimate Limit State Design

CLIENT: HARCO

REF: 12/170
DATE: 26-Jun-16

POLE AND FOOTING DETAILS

Pole / Load Height =	**0.70**	metres
Lateral Load	**1.1**	kN (ULS)
Footing Diameter =	**0.25**	metres
Min Pole Spacing =	**2.5**	metres
Req'd Footing Depth	0.79	metres
No Resistance Depth (fo)	**0.25**	metres

SOIL PROPERTIES:

Undrained Shear Strength (Su)	=	**50 kPa**
Soil Strength Reduction Factor	=	**0.5**

FOOTINGS (Using "Broms and Beyond" by Pender)

Spacing Factor (B1/VM4) = 1.000

Required Footing Depth = Pender + Dia = 0.54 + 0.25

= 0.79 metres

P & P CONSULTING ENGINEERS LTD Civil and Structural Engineering 6A Montel Avenue, Henderson ph: 836-1853	Project: Harco/ Alum Swimming Pool Fences	Job No. 12/170	Sheet 8 of
	Designed: PP/JD		Date: Sep 2012

3.5 WITH BASE PLATE OPTION

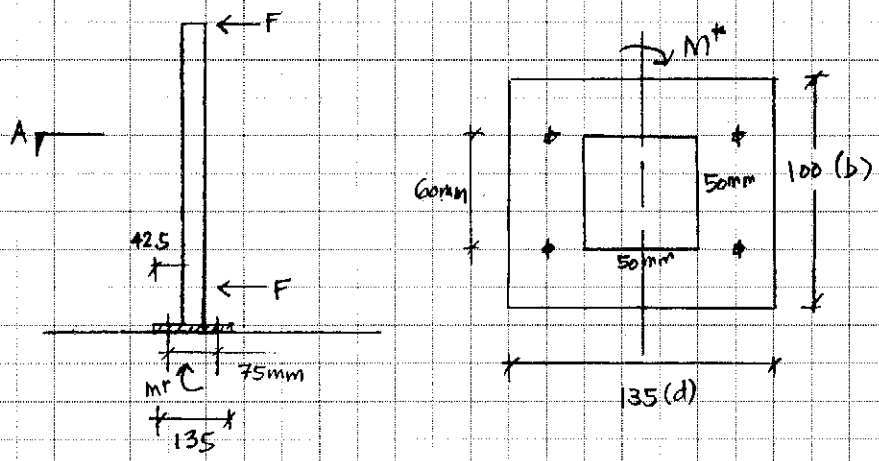

SIDE ELEVATION PLAN 'A'

→ BASE PLATE

Provided Section : 135 x 100mm Base Plate

$M^*_{@\ BASE}$ = 0.276 kNm $N^* = 1.2(0.5kPa)(1.2)(2.5) = 1.8kN$

$V^*_{@\ BASE}$ = 1.1 kN

$f_{BASE} = \frac{P}{A} \pm \frac{6M}{BD^2} = 0.133\ MPa \pm 25 = 26MPa, -25MPa$

Allo BP (concrete) = $0.85f'c$ = 17.5MPa
Support = 15MPa

$M^*_{plate} = (2.6MPa)(100)(42.5)^2/2 = 234812\ N\text{-}mm$

USING 6063 – T6

As per NZS1664 : 1997 Sect 3.45 (Tension – plates)

$\phi FL = 1.3\,\phi_y F_{ty} = 1.3(0.95)(172) = 212.42\ MPa$ ←

$= 1.42\,\phi_u F_{tu}/k_t = 1.42(0.85)(207)/1 = 250\ MPa$

$\phi FL = \phi M/Z$, $Z\ (elastic) = \frac{bt^2}{6}$

$(212.42\ MPa) = (234812)/\left(\frac{100\,t^2}{6}\right)$

min. thickness = 8.1 mm ~ say 10mm

Use 6063 – T6 135mm x 100mm x 10mm thick Aluminium Base Plate

P & P CONSULTING ENGINEERS LTD
Civil and Structural Engineering
6A Montel Avenue, Henderson ph: 836-1853

Project: Harco/ Alum Swimming Pool Fences	Job No. 12/170	Sheet 9 of
Designed: PP/JD		Date: Sep 2012

⇒ ANCHORS INTO CONCRETE

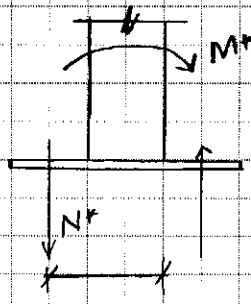

$M^* = 0.76$ kNm

$V^* = 1.1$ kN

X, lever arm = 62.5mm

$N^* = M^*/x = 12.2$ kN

$N^*/_{BOLT} = 12.2\text{kN}/2 = 6.1$ kN

$V^*/_{BOLT} = 1.101\text{kN}/4 = 0.3$ kN

USING M10 Chemset Anchor Stud (EPCON C6 SERIES)

$\phi Nur = (49.3\text{kN})(0.87)(1)(1)(1.0)(0.5a)$
$= 9.9\text{kN/BOLT} \quad > N^*$ ok!

$\phi Vur = (5.1\text{kN})(0.79)(1)(0.74)(0.82)(0.71)$
$= 1.74\text{kN/BOLT} \quad > V^*$ ok!

RATIO = 0.9 < 1.2 ok!

Eff. depth, h= 80mm
F'c = 20 MPa
Edge Distance = 50mm min
Spacing = 60mm min

Use 4/M10 Chemset Anchor Studs Grade A4/316 SS with Epcon C6 Series. Drilled hole depth to be 80mm min into Concrete. Other requirements are as follows:

Min. Substrate (Concrete) thickness = 100 mm
Min. Concrete Edge Distance = 50mm
Min. Spacing = 60mm

NOTE: FIXING OF POSTS TO BASE PLATES BY OTHERS. IF WELDED THE CAPACITY OF THE POSTS WILL BE REDUCED AND NEEDS TO BE REDESIGNED.

P & P CONSULTING ENGINEERS LTD
Civil and Structural Engineering
6A Montel Avenue, Henderson ph: 836-1853

Project | Job No. | Sheet 10 of

Designed: Mr M. Ormeno | Date

3.6 Alternatively Using Coach Screws

$N_u = 6.3\ kN$, $V_u = 0.3\ kN$

Using M10 coach screws

$$\phi N_n = \phi \times n \times k \times p \times Q_k$$

where $\phi = 0.7$
$n = 1$, number of screws
$k = 0.7$, timber group J5
$= 0.8$, medium duration
$p = 150\ mm$
$Q_K = 107\ N/mm$, NZS 3603 / Table 4.16

$\Rightarrow \phi N_n = 6.3\ kN > N_u$, hence OK

Shear Verification

$$\phi V_n = \phi \times n \times k_1 \times k_{12} \times k_{13} \times k \times Q_{sk}$$

where $\phi = 0.7$
$n = 1$
$k = 1$
$k_1 = 0.8$, medium duration
$k_{12} = 0.7$
$k_{13} = 1.0$
$Q_{sk} = 2.26\ kN$

$\Rightarrow \phi V_n = 0.9\ kN > V_u$, hence ok

$\therefore$ Use 4/M10 coach screws. 150 mm minimum penetration

P & P CONSULTING ENGINEERS LTD Civil and Structural Engineering 6A Montel Avenue, Henderson ph: 836-1853	Project.	Job No.	Sheet 11 of
	Designed: Mr M. Ormeno		Date

4. Boundary Joist to Joist/Nog Connection

Using 190 x 45 SG8 joists or nogs at 450 mm crs

→ D

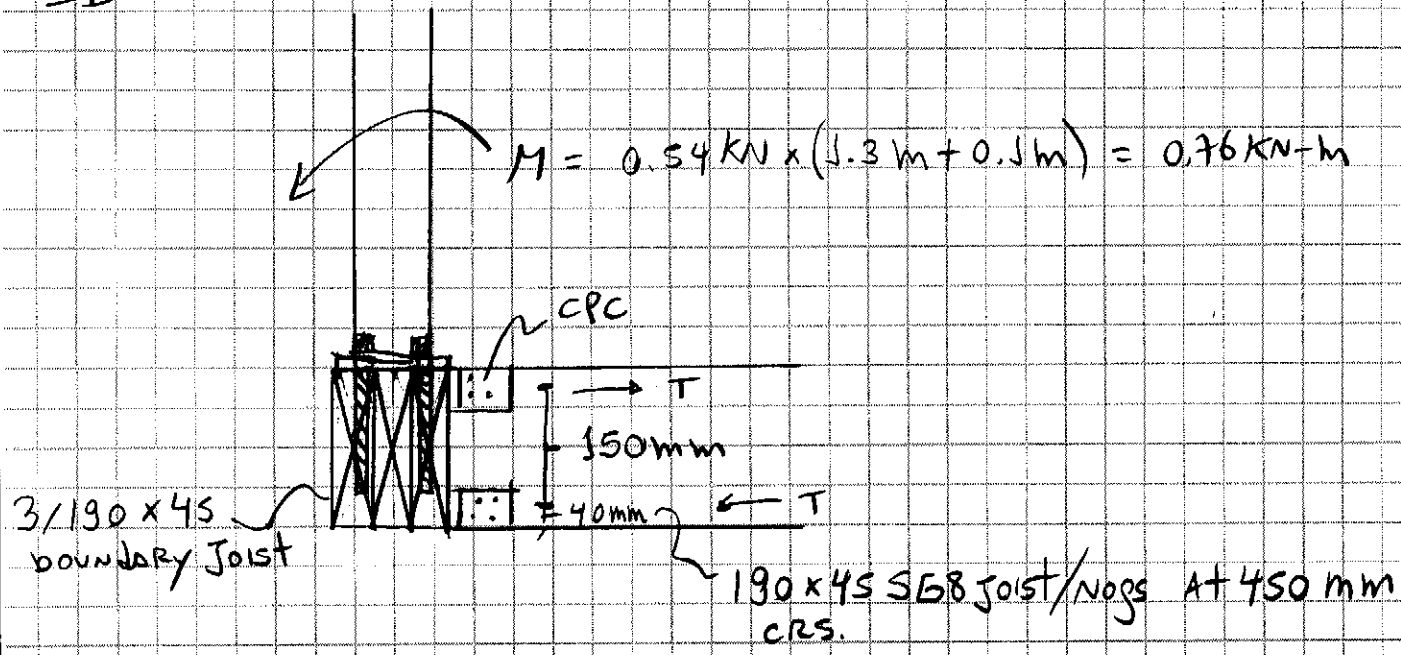

→ D $T = \frac{0.76\ kN-m}{0.15\ m} = 5.1\ KN$

Using CPC 40 cleats at the 2 adjacent joist/nogs to post

→ Load per cleat = $\frac{5.1\ KN}{2} = 2.6\ KN$

Cleat Capacity (PAIR) = 5.5KN , hence OK

Refer cleat specification on pages 12 & 13

LUMBERLOK®

12

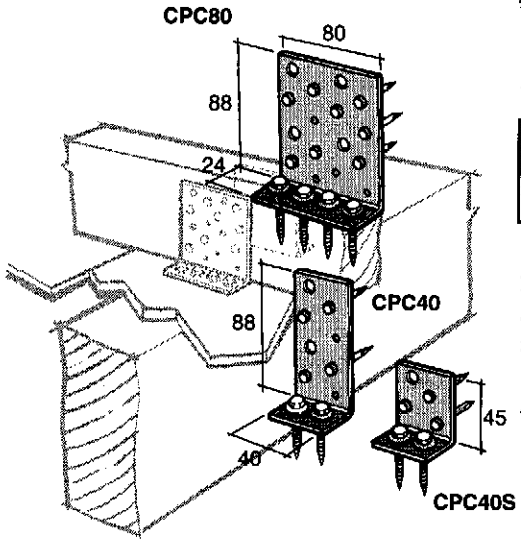

*CONCEALED PURLIN CLEATS CPC40, CPC80, CPC40S

1.55mm G300 Z275 Galvanised Steel

Nominal Rafter Width	50	100
Cleat	CPC40 or CPC40S	CPC80

CPC cleats provide an excellent purlin/rafter fixing in exposed situations, resisting any wind uplift.
The cleats can also be used for exposed rafter to ridge beam connections. Fixed with Type 17-14g Hex Head Screws and LUMBERLOK Product Nails 30mm x 3.15mm diameter (not supplied with product).

Refer to Characteristic Loadings Brochure for design values.
Available in Stainless Steel 304.

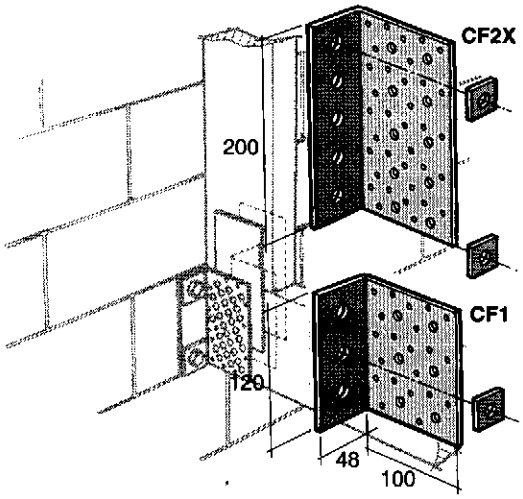

CONCRETE FIXING CLEATS CF1 & CF2X

1.55mm G300 Z275 Galvanised Steel

Both cleats provide a quick and economical method of joining timber trusses, beams, columns to solid concrete or grouted concrete blockwork.
Both cleats can be used on one or two sides of timber members, depending on the loads required. Fixed with LUMBERLOK Product Nails 30mm x 3.15mm diameter and appropriate M12 bolts (not supplied with product). 40x40x5mm washer supplied.

Refer to Characteristic Loadings Brochure for design values.

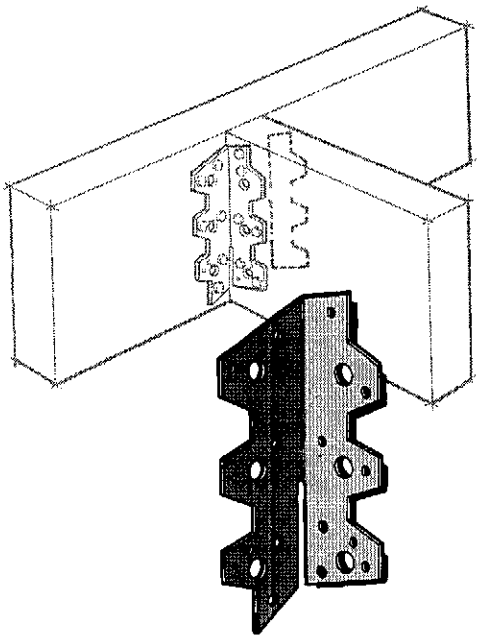

MULTIGRIP

0.91mm G300 Z275 Galvanised Steel

LUMBERLOK Multigrips are a multipurpose product that can be bent into any of five combinations. One product provides for all alternatives with the bending slot enabling easy on-site bending.

Size 125mm high x 38mm flanges. Fix with LUMBERLOK Product Nails 30mm x 3.15mm diameter.
Correct nailing shown below.

Refer to Characteristic Loadings Brochure for design values.
Available in Stainless Steel 304.

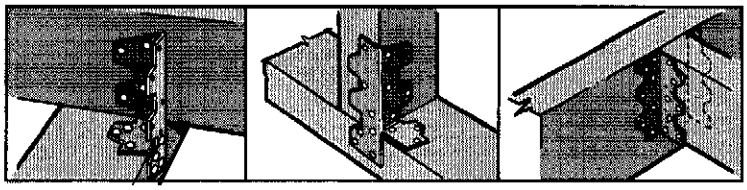

*** Detailed product sheet available**

© Copyright 2011 MiTek Holdings, Inc.
All rights reserved.

13

LUMBERLOK®

STANDARD FIXING OPTIONS

FIXING TYPE A 0.55kN

1 NAIL

Note: Two nails maybe preferred to prevent batten rolling over with high roof pitches.

Purlin / Batten

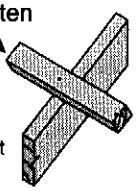

FIXING TYPE B 0.8kN

2 NAILS

Purlin / Batten

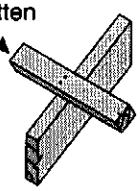

FIXING TYPE C 2.4kN

1 BLUE SCREW

Purlin / Batten

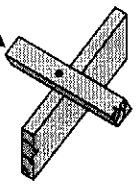

FIXING TYPE D 3.45kN

2 BLUE SCREWS

OR

2 SKEW NAILS plus 2 WIRE DOGS

(for purlin on edge)

Purlin / Batten

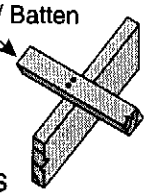

FIXING TYPE E 5.5kN

2 NAILS plus 1 CT200

OR

1 PAIR of CPC40

Purlin / Batten

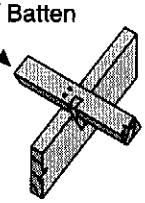

CPC40

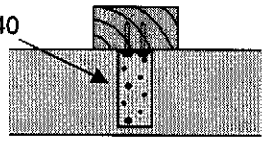

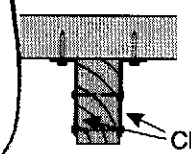

CPC40

FIXING DEFINITIONS

NAIL = Either 90mm x 3.15 dia. power-driven nail or 100mm x 3.75 dia. hand-driven nail

BLUE SCREW = 80mm x 10 gauge LUMBERLOK BLUE SCREW

WIRE DOG = LUMBERLOK WIRE DOG either LH or RH

CT200 = LUMBERLOK Ceiling Tie CT200 bend over purlin, 4 x LUMBERLOK Product Nails 30mm x 3.15 dia. each end

CPC40 = LUMBERLOK CPC40 with 2 x Type 17-14g x 35mm Hex Head Screws per flange

FIXING TOLERANCES

LUMBERLOK BLUE SCREW

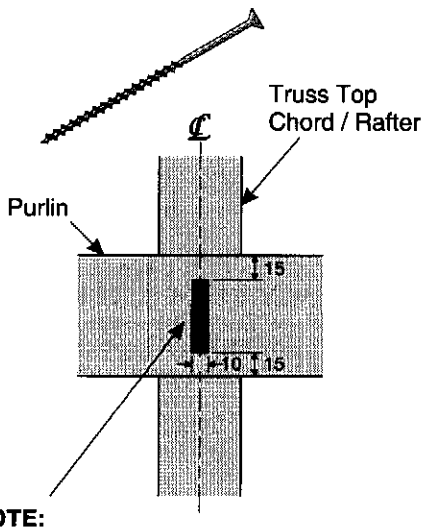

NOTE:

Locate fixings within the shaded area. Care to be taken to avoid over tightening of screws.

PURLIN / BATTEN SPLICE FIXING OPTIONS

FIXING TYPE A & B OVER PURLIN SPLICE

1 nail in each

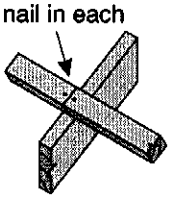

NOTE:

Skew nail when fixing to 35mm rafter or truss

FIXING TYPE C, D or E OVER PURLIN SPLICE

90 x 35mm block fixed to chord or rafter with 4 x 75mm nails

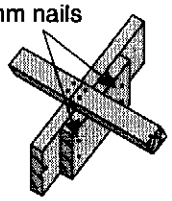

- TYPE C
  1 SCREW
  to each purlin
- TYPE D & E
  1 NAIL plus 1 SCREW to each purlin

© Copyright 2011 MiTek Holdings, Inc.
All rights reserved.

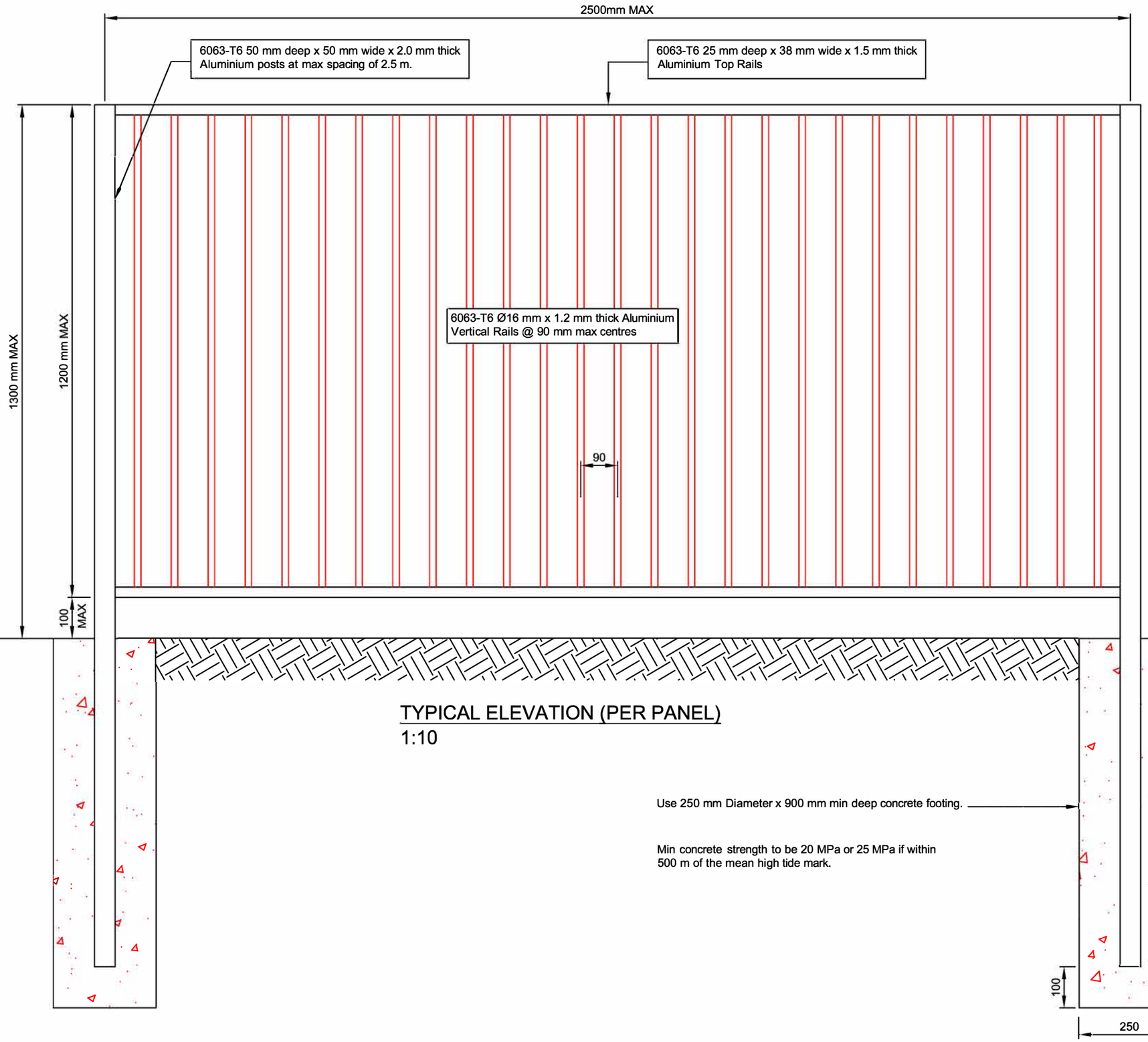

TYPICAL ELEVATION (PER PANEL)
1:10

Use 250 mm Diameter x 900 mm min deep concrete footing.

Min concrete strength to be 20 MPa or 25 MPa if within 500 m of the mean high tide mark.

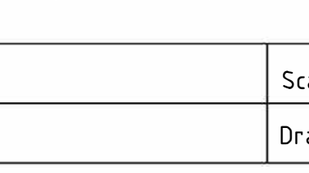

THIS POOL FENCE IS SUITABLE FOR THE FOLLOWING:

WIND LOAD:	UP TO "VERY HIGH" WIND ZONE
SOIL UNDRAINED SHEAR STRENGTH:	50 kPa

NOTE:

1. ALL ALUMINIUM SURFACES SHALL BE PAINTED WHERE THE STRUCTURES ARE TO BE EXPOSED TO EXTREMELY CORROSIVE CONDITIONS AND WHERE THE ALUMINIUM ALLOY PARTS ARE IN CONTACT WITH, OR ARE FASTENED TO, STEEL MEMBERS OR OTHER DISSIMILAR MATERIALS.
2. PAINTING PROCEDURE MUST BE IN ACCORDANCE WITH AS/NZS 1664.
3. ALL WELDING SHALL BE DONE IN ACCORDANCE WITH AS1665.

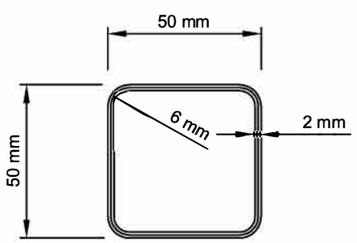

PLAN (POST)
1:2

REVA:27-06-16

P & P CONSULTING ENGINEERS LTD Civil and Structural Engineering 6A Montel Avenue, Henderson ph: 836-1853	WARNER FENCING & GATES LTD	Scales 1:10 , 1:2 (A3)	Project 12/170
	ALUMINIUM SWIMMING POOL FENCES	Drawn JD / Date 12-09-12	Sheet S01

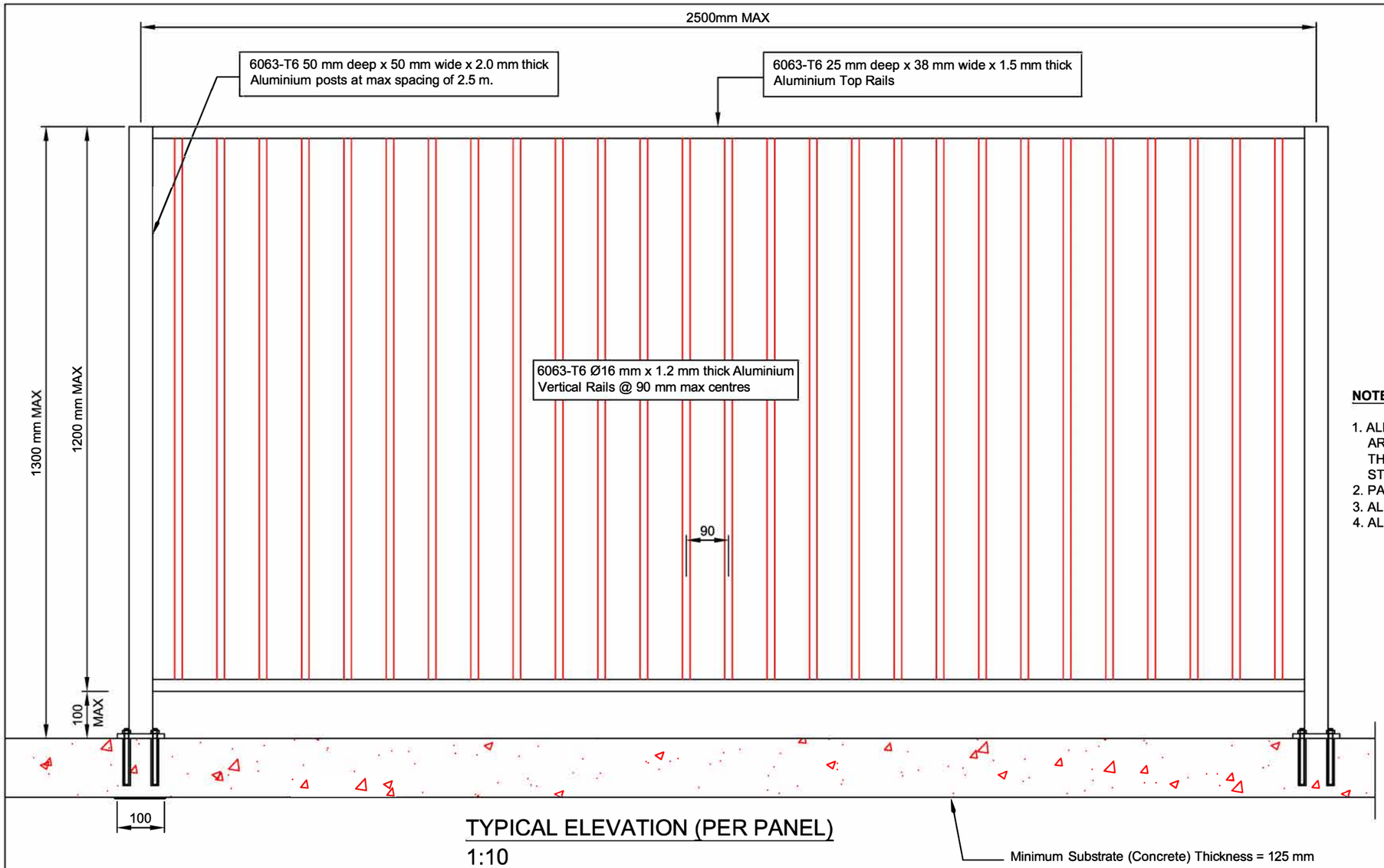

TYPICAL ELEVATION (PER PANEL)
1:10

THIS POOL FENCE IS SUITABLE FOR THE FOLLOWING:

WIND LOAD: UP TO "VERY HIGH" WIND ZONE

NOTE:

1. ALL ALUMINIUM SURFACES SHALL BE PAINTED WHERE THE STRUCTURES ARE TO BE EXPOSED TO EXTREMELY CORROSIVE CONDITIONS AND WHERE THE ALUMINIUM ALLOY PARTS ARE IN CONTACT WITH, OR ARE FASTENED TO, STEEL MEMBERS OR OTHER DISSIMILAR MATERIALS.
2. PAINTING PROCEDURE MUST BE IN ACCORDANCE WITH AS/NZS 1664.
3. ALL WELDING SHALL BE DONE IN ACCORDANCE WITH AS1665.
4. ALL BOLTS TO BE STAINLESS STEEL.

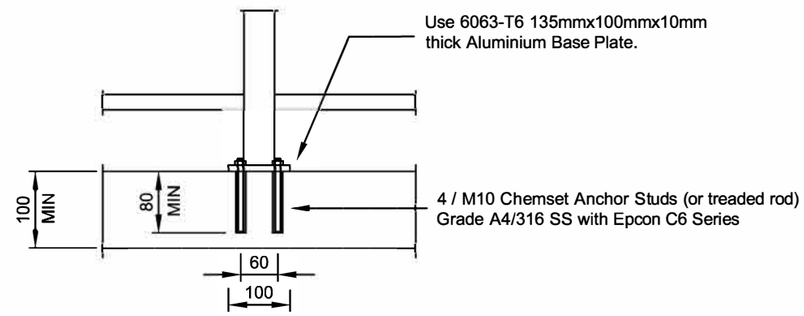

BASE FIXING
1:10

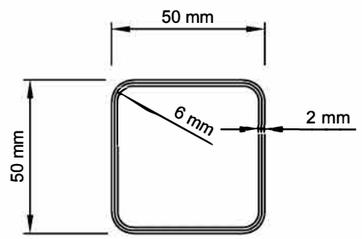

PLAN (POST)
1:2

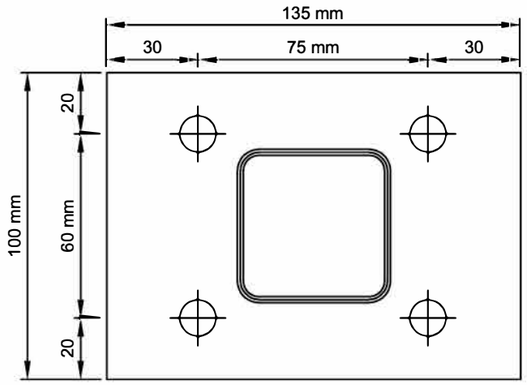

PLAN (BASE PLATE)
1:2

REVA:27-06-16

P & P CONSULTING ENGINEERS LTD Civil and Structural Engineering 6A Montel Avenue, Henderson ph: 836-1853	WARNER FENCING & GATES LTD	Scales 1:10 , 1:2 (A3)	Project 12/170
	ALUMINIUM SWIMMING POOL FENCES (BASE PLATE OPTION)	Drawn JD / Date 12-09-12	Sheet S02

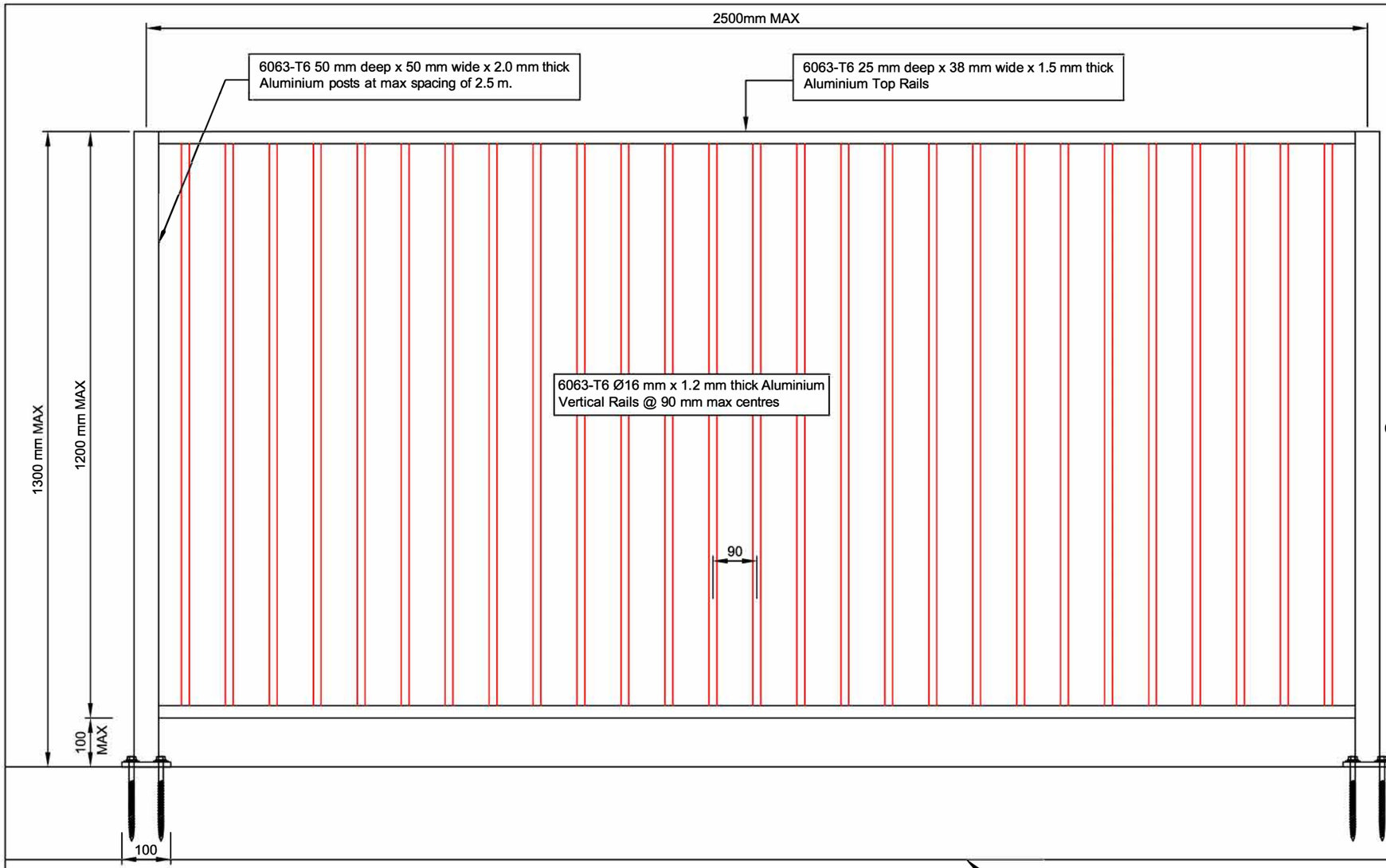

TYPICAL ELEVATION (PER PANEL)
1:10

THIS POOL FENCE IS SUITABLE FOR THE FOLLOWING:

WIND LOAD: UP TO "VERY HIGH" WIND ZONE

NOTE:

1. ALL ALUMINIUM SURFACES SHALL BE PAINTED WHERE THE STRUCTURES ARE TO BE EXPOSED TO EXTREMELY CORROSIVE CONDITIONS AND WHERE THE ALUMINIUM ALLOY PARTS ARE IN CONTACT WITH, OR ARE FASTENED TO, STEEL MEMBERS OR OTHER DISSIMILAR MATERIALS.
2. PAINTING PROCEDURE MUST BE IN ACCORDANCE WITH AS/NZS 1664.
3. ALL WELDING SHALL BE DONE IN ACCORDANCE WITH AS1665.
4. ALL BOLTS TO BE STAINLESS STEEL.

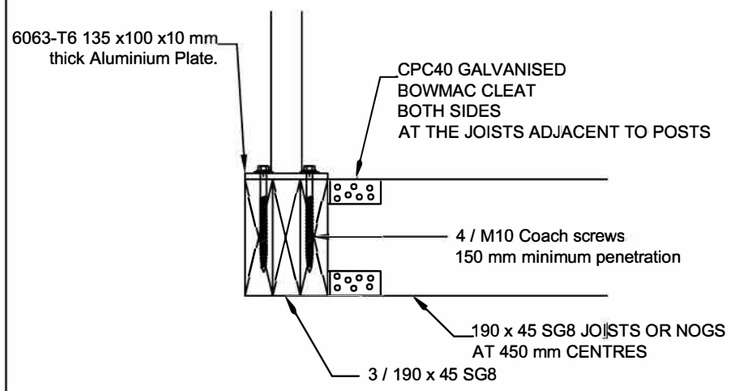

POST TO TIMBER CONNECTION DETAIL
1:10

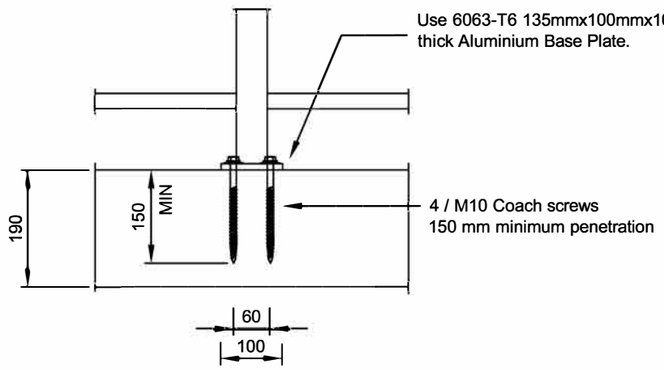

BASE FIXING
1:10

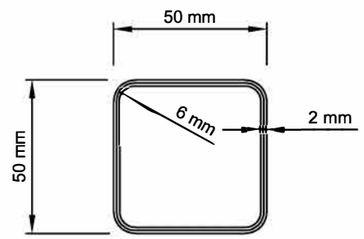

PLAN (POST)
1:2

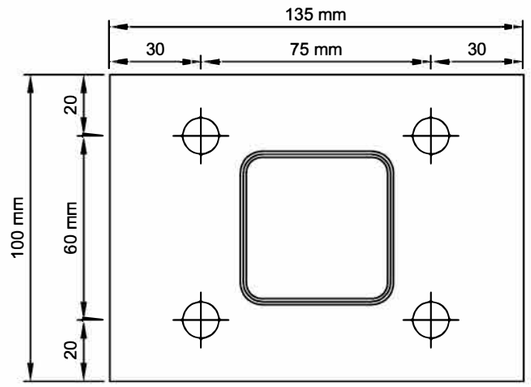

PLAN (BASE PLATE)
1:2

P & P CONSULTING ENGINEERS LTD Civil and Structural Engineering 6A Montel Avenue, Henderson ph: 836-1853	WARNER FENCING & GATES LTD	Scales 1:10 , 1:2 (A3)	Project 12/170
	ALUMINIUM SWIMMING POOL FENCES (BASE PLATE OPTION WITH COACH SCREWS)	Drawn JD/MO | Date 03-08-16	Sheet S03

THIS POOL FENCE IS SUITABLE FOR THE FOLLOWING:

WIND LOAD: UP TO "VERY HIGH" WIND ZONE

NOTE:

1. ALL ALUMINIUM SURFACES SHALL BE PAINTED WHERE THE STRUCTURES ARE TO BE EXPOSED TO EXTREMELY CORROSIVE CONDITIONS AND WHERE THE ALUMINIUM ALLOY PARTS ARE IN CONTACT WITH, OR ARE FASTENED TO, STEEL MEMBERS OR OTHER DISSIMILAR MATERIALS.
2. PAINTING PROCEDURE MUST BE IN ACCORDANCE WITH AS/NZS 1664.
3. ALL WELDING SHALL BE DONE IN ACCORDANCE WITH AS1665.
4. ALL BOLTS TO BE STAINLESS STEEL.

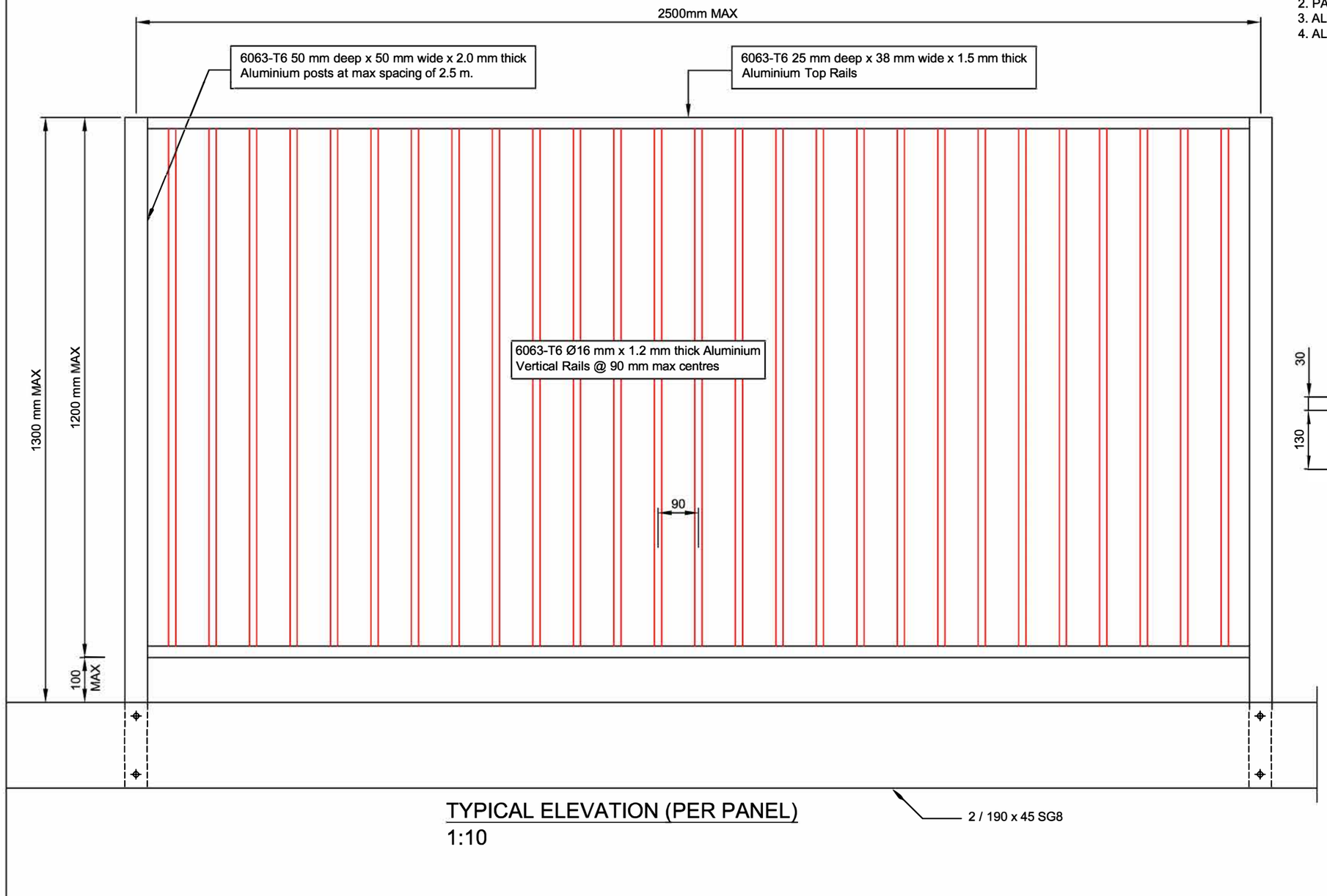

TYPICAL ELEVATION (PER PANEL)
1:10

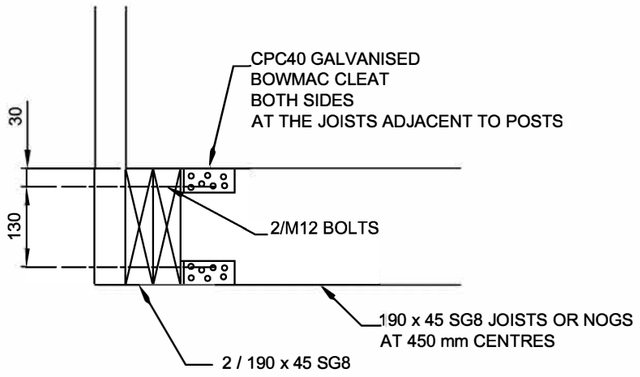

POST TO TIMBER CONNECTION DETAIL
1:10

P & P CONSULTING ENGINEERS LTD Civil and Structural Engineering 6A Montel Avenue, Henderson ph: 836-1853	WARNER FENCING & GATES LTD	Scales 1:10		Project 12/170
	ALUMINIUM SWIMMING POOL FENCES (BOLTED TO TIMBER OPTION)	Drawn JD/MO	Date 03-08-16	Sheet S04

KAIPARA DISTRICT

Kaipara te Oranganui • Two Oceans Two Harbours

KAIPARA DISTRICT COUNCIL

Producer Statement Construction (PS3) - Plumbing

Issued by: PAUL MASSEY being a Registered Certifying Plumber.

In respect of the testing of water pipework prior to concealment for:

(Owner) MR & MRS D & C RENDALL

At (Address) 53 ROBERT HASTIE DRIVE

MANGAWHAI

Legal Description: Lot 81 DP 556753 Valuation

I have sighted the issued building consent (BC 210441) and have constructed the plumbing pipes and fitting in accordance with the approved building consent, the New Zealand Building Code, and the manufacturers specifications and requirements.

I have tested the water supply system as follows:

(✓) By pressurising the water supply system by subjecting the hot and cold system to a pressure of 1500kPa for a period of not less that 15 minutes and inspecting the system to ensure that there are no leaks, in accordance with NZBC G12/AS1 Clause 7.5.1

(✓) By pressurising the UPVC water piping systems to 1.5 times the working pressure for a period not less than 15 minutes and checking that there are no leaks, as given in section 9 of NZS 7643, in accordance with NZBC G12/AS1 clause 7.5.2

I believe on reasonable grounds that the pipework has passed that test.

I also understand that Kaipara District Council in accepting this producer statement construction (PS3), will be relying on it to establish compliance at the completion of the building work.

Signature of Registered Certifying Plumber: P.J.Massey

Registration Number: 12780 Reg Expiry Date: 31/3/2022

Date: 20/1/2022

NORTHERN FOUNDATIONS LTD.

Memorandum from licensed building practitioner: Record of building work

Section 88, Building Act 2004

Please fill in the form as fully and correctly as possible.
If there is insufficient room on the form for requested details, please continue on another sheet and attach the additional sheet(s) to this form.

THE BUILDING

Street address: Lot 81, The Sanctuary	
Suburb:	
Town/City: Mangawhai	Postcode:

THE PROJECT

Building consent number: 210441

THE OWNER(S)

Name(s): ACDL Trustee Ltd. D&L Kendall	
Mailing address:	
Suburb:	PO Box/Private Bag:
Town/City:	Postcode:
Phone number:	Email address:

RECORD OF WORK THAT IS RESTRICTED BUILDING WORK

PRIMARY STRUCTURE

Work that is restricted building work	Description of restricted building work	Carried out or supervised
Tick ✓	If necessary, describe the restricted building work.	Tick ✓ whether you carried out the restricted building work or supervised someone else carrying out the restricted building work.
Foundations and subfloor framing ☑	Foundations as per engineers specs.	✓ Carried out ✓ Supervised
Walls ☐		○ Carried out ○ Supervised
Roof ☐		○ Carried out ○ Supervised
Columns and beams ☐		○ Carried out ○ Supervised
Bracing ☐		○ Carried out ○ Supervised
Other ☐		○ Carried out ○ Supervised

EXTERNAL MOISTURE MANAGEMENT SYSTEMS		
Work that is restricted building work	**Description of restricted building work**	**Carried out or supervised**
Tick ✓	If necessary, describe the restricted building work.	Tick ✓ whether you carried out the restricted building work or supervised someone else carrying out the restricted building work.
Damp proofing ☑	Polythene underneath slab	✓ Carried out ✓ Supervised
Roof cladding or roof cladding system ☐		○ Carried out ○ Supervised
Ventilation system (for example, subfloor or cavity) ☐		○ Carried out ○ Supervised
Wall cladding or wall cladding system ☐		○ Carried out ○ Supervised
Waterproofing ☐		○ Carried out ○ Supervised
Other ☐		○ Carried out ○ Supervised

ISSUED BY

Name and contact details of the licensed building practitioner who is licensed to carry out or supervise restricted building work.

Name: Jason Wright	LBP number: 126479
Class(es) licensed in:	
Carpentry	
Plumbers, Gasfitters and Drainlayers registration number (if applicable):	
Mailing address (if different from below):	
Street address/Registered office:	
Suburb:	Town/City:
PO Box/Private Bag	Postcode:
Phone number:	Mobile: 021975279
After hours:	Fax:
Email address: sales@northernfoundations.co.nz	Website:

DECLARATION

I Jason Wright carried out or supervised the restricted building work recorded on this form.

Signature: 

Date: 27/10/2021

A Rated Waste Water Services Ltd
52 Fork Road
RD 1
KUMEU 0891
AUCKLAND
09 412 7588 or 027 273 6967
aratedwws@xtra.co.nz

Accredited Service Agent for

bioCYCLE

"Turn Your Ones and Twos into Trees"

SERVICING & MAINTENANCE CONTRACT

Customer Register/Tank Number **Biocycle Model #**_____

THIS AGREEMENT is between
A RATED WASTE WATER SERVICES LTD (the Company)
Registered office: 52 Fork Road, RD 1, Kumeu 0891, Auckland
and
DAVE & LINDA KENDALL (the Customer) of ***MANGAWHAI*** (area)

is for the maintenance of your waste water treatment system installed at :

Site address: ***53 ROBERT HASTIE DRIVE, MANGAWHAI***

Postal address: ***PO Box 401094, MANGAWHAI HEADS.***

Landline Phone Number: ..... Mobile Number: ***022 054 6323 LINDA***

Email Address: .....

Which shall operate under the following terms and conditions:

1. Once each six (6) months of the term agreed, the Company shall inspect the system and carry out the following work:
   (a) Check and adjust air intake where necessary.
   (b) Clean where necessary the inside of the tank from which the irrigation network runs.
   (c) Check the blower, irrigation pump and electrical system, including the alarm system.
   (d) Monitor and maintain the balance of purifiers.
   (e) Clean the irrigation discharge lines and repair defective drippers at Customer's expense.
   (f) Report to the Customer and local authority of any problems that which have arisen.
   (g) Check and if necessary clean the irrigation filter. If filter needs replacing this would be at Customer's expense. Regular cleaning of the irrigation filter is the responsibility of the homeowner and should be done on a monthly basis.
   (Cleaning of the irrigation filters on a monthly basis can be carried out by A Rated Waste Water Services Ltd at an extra charge of **$60.00 (incl GST)** – this will be additional to the service cost as per paragraph 5 below.)

2. In the event of the alarm system becoming active, the customer will notify the authorised Biocycle agent **A Rated Waste Water Services Ltd,** telephone **Kevin Carr on 09 412 7588 or 027 273 6967** and advise that the system has malfunctioned. **A Rated Waste Water Services Ltd** will undertake to attend the call within 48 hours of receiving the advice that the alarm system has activated, or that there is a malfunction of the system.

..../2

3. If the customer requests the Company to carry out work to the system other than in Clause 1. above, or that covered by the guarantee, then the Customer will have to pay the Company's reasonable additional charges for such work and any necessary materials. Travel kilometres and call out fees will be additional to the above. Also the customer shall pay the Company's reasonable additional charges for work done and materials supplied pursuant to Clause 1. above where the need for such work and materials results from the Customer's failure to ensure compliance with any operating instructions, suggestions or recommendations given by the Company or from negligent or wilfully damaging actions of any person, or from the system being required to bear a workload which is in excess of design loading for the site, or from earthquake, fire, flood, storm, lightening, tempest, landslip, or from persons not authorized by the Company interfacing with the present system in any way, or from the Customer's failure to advise of any alarm warning or failure to comply with this agreement.

4. The Company (A Rated Waste Water Services Ltd) cannot be held responsible for:
any defects arising from the installation of the system and it's irrigation fields, either by the manufacturer, installers, drain layers or engineers, etc. Any such defects and subsequent remedies or repairs required, will be the liability of the aforementioned above, or the home owner.

5. The Company will invoice the Customer for any reasonable additional charges for work done and materials supplied and the Customer shall make payment within seven (7 days) of the said invoice. (Late payment will incur penalties of 5%).

6. The maintenance fee is **$212.75** per visit, (including GST) **payable within 7 days** of the work being performed. This fee is the current maintenance charge and is subject to change if an adjustment is required. An invoice and maintenance form will be provided after each visit.

This contract is effective from ***7th July 2022*** and expires on the sale of the above mentioned property unless notice is given by the Customer to the Company of termination of this agreement.
If this agreement is terminated, A Rated Waste Water Services Ltd will be obliged to inform council that an on-going service agreement no longer stands between the parties.

Dated this .....13.....day of .....July.....20..22...
Signed by (Mr / Mrs / Ms / Miss)

.....DAVID KENDALL..... (Customer's Name)

..... (Customer's Signature)

For and on behalf of **A RATED WASTE WATER SERVICES LTD**

A Rated Waste Water Services Ltd

Signed ..... Kevin Carr (Director)

PLEASE RETURN ONE COPY TO A RATED WASTE WATER SERVICES LTD
AND RETAIN A COPY FOR YOUR OWN RECORDS.
THE THIRD COPY OF THIS AGREEMENT SHALL BE GIVEN TO THE COUNCIL BY THE INSTALLER or HOME OWNER
This document is not for distribution and is invalid unless signed by ARated Director

Form 7
Code compliance certificate

Section 95, Building Act 2004

The building

Street address of building:	53 Robert Hastie Drive, Mangawhai
Legal description of land where building is located:	Lot 81 DP 556753
Building name:	N/A
Location of building within site/block number:	53 Robert Hastie Drive Mangawhai
Level/unit number:	0
Current, lawfully established, use:	2.0 Housing: 2.0.2 Detached Dwelling with 4 occupants
Year first constructed:	2021

The owner

Name of owner:	ACDL Trustee Limited
Contact person:	Lance Kendall
Mailing address:	17 Pinefield Road, Whenuapai, Auckland
Street address/registered office:	N/A
Phone number:	Landline: N/A Mobile: 02102210567
Daytime:	Landline: N/A Mobile: 02102210567
After hours:	Landline: N/A Mobile: 02102210567
Facsimile number:	No information provided
Email address:	linda.kendall@xtra.co.nz
Website:	No information provided

First point of contact for communications with the council/building consent authority:
Lisa Fletcher ; Mailing Address: 14 Fallow Street
Queenstown 9300; Mobile: 02102210567; Email: lisa@c3bc.co.nz

Building work

Building consent number:	BC210441
Description:	New Single Storey 4 Bedroom Dwelling with Attached Double Garage and Swimming Pool
Issued by:	Kaipara District Council

Code compliance

The building consent authority named below is satisfied, on reasonable grounds, that -
the building work complies with the building consent.

Signature: John Edwards
Position: building control officer
On behalf of: Kaipara District Council
Date: 05 August 2022

Date Submitted: Thursday, 19 May 2022

Form 6
Application for code compliance certificate

Section 92, Building Act 2004

The building consent

Building consent number:	BC210441
Issued by:	Kaipara District Council

Agent

Name of agent:	Lance Vale
Contact person:	
Mailing address:	0 0
Street address/registered office:	
Phone number:	Landline: 021525659
Daytime:	Landline: 021525659
After hours:	Landline: 021525659
Facsimile number:	No information provided
Email address:	lance@coastalhomesnz.com
Website:	No information provided
Relationship to owner:	Application made on owners behalf

First point of contact for communications with the building consent authority:

Full name:	Lance Vale
Mailing address:	0 0
Phone number(s):	021525659
Facsimile number(s):	N/A
Email address(es):	lance@coastalhomesnz.com

Application

All building work to be carried out under the building consent specified on this form was completed on:
23 May 2022

The licensed building practitioner(s) who carried out or supervised the restricted building work is/are as follows:

Name	Marc Vale
Licensing class	Design
Licensed building practitioner number (or registration number if treated as being licensed under section 291 of Act)	BP134199
Particular work carried out or supervised	Design

The personnel who carried out building work other than restricted building work are as follows:

Name	Paul Massey
Address	No information provided
Phone number	021728501
Registration number	N/A
Licensed building practitioner number	N/A

Name	Jason Wright
Address	RD 2, Kaiwaka, 0573
Phone number	021975279
Registration number	BP126479
Licensed building practitioner number	N/A

Name	Rhys Bright
Address	No information provided
Phone number	02102358569
Registration number	N/A
Licensed building practitioner number	N/A

Name	Clark Smith
Address	No information provided
Phone number	021552196
Registration number	N/A
Licensed building practitioner number	N/A

Name	Glen
Address	No information provided
Phone number	0272830141
Registration number	N/A
Licensed building practitioner number	N/A

Name	Mark Maelzer
Address	No information provided
Phone number	0273104848
Registration number	N/A
Licensed building practitioner number	N/A

Name	Kirran Dheda
Address	No information provided
Phone number	0210395060
Registration number	N/A

Licensed building practitioner number	N/A

The following specified systems are contained on the compliance schedule for the building and, in the opinion of the personnel who installed them, are capable of performing to the performance standards set out in the building consent:

There are no specified systems in the building.

I request that you issue a code compliance certificate for this work under section 95 of the Building Act 2004.
The code compliance certificate should be sent to:

Agent:	0 0

Signature of agent on behalf of and with the authority of the owner:
LANCE VALE

Name of person signing:	Lance Vale
Date:	19 May 2022

Attachments

The following documents are attached to this application:
No attachments

Kronobuild®



OSB Barrier General Warranty Terms

Oriented Strand Board OSB

WARRANTY TERMS

This warranty applies to GlobalBuild NZ OSB Barrier ('OSB Barrier') supplied by GlobalBuild NZ when used in accordance with all GlobalBuild NZ requirements.

This warranty is to be read in conjunction with all relevant and applicable technical documentation published or referenced by GlobalBuild NZ.

Date warranty valid:

5 years from proven date of purchase or dispatch from GlobalBuild NZ whichever is the earlier.

All enquiries relating to this warranty must (in the first instance) be directed to the place of purchase, the supplier or the installer.

GlobalBuild NZ warrants that:
At the time of delivery to the merchant (or site where applicable) the OSB Barrier will:

- be free from freight-related defects
- be free from defects that may have arisen through defective factory workmanship or materials
- conform to the performance characteristics listed on the current OSB Barrier pass™ ('warranted condition')

In the event a breach of the warranty is proven, the following applies:

- GlobalBuild NZ will, at its discretion, supply replacement OSB Barrier without charge or refund the value of the product.
- Other losses or damage caused by a breach of the warranty or failure of the product for any other reason are not covered.
- GlobalBuild NZ obligations under this warranty are limited to the replacement of defective OSB Barrier or the value of the OSB Barrier. The value of the materials will be reduced pro-rata, based on the remaining life of the product (as set by the relevant durability requirements of the NZ Building Code).
- GlobalBuild NZ reserves the right to supply other comparable materials should the warranted materials no longer be supplied by GlobalBuild NZ.

This warranty is subject to the following:

- Receipt of date of purchase of the product.
- Evidence satisfactory to GlobalBuild NZ of failure of the OSB Barrier.
- Receipt of a written claim from the claimant either within 30 days of when the defect would have become reasonably apparent or, if the defect was reasonably apparent prior to installation, then the claim must be made prior to installation.
- The claim must include full details of the alleged defect.
- Evidence satisfactory to GlobalBuild NZ that all maintenance requirements have been carried out.
- The warranty does not cover failure or problems caused by defective use; failure relating to improper design of the project structure; structural failure; settlement; movement of materials to which the product is attached or dependent on; acts of God including but not limited to earthquakes, cyclones, floods or other severe weather conditions; inadequate maintenance; growth of mould, mildew, fungi, bacteria or any organism on any product; or acts or omissions of a third party over whom GlobalBuild NZ has no control.
- The warranty does not cover failure or loss arising from the failure to follow all relevant GlobalBuild NZ advice and requirements.
- Normal wear and tear is excluded from this warranty.

All relevant information is available from GlobalBuild NZ (refer to www.globalbuild.nz).

Note:

All OSB Barrier technical information is uncontrolled in printed format, so in all instances refer only to the documentation on the website.



GLOBALBUILD.NZ

PO BOX 36-150, NORTHCOTE, AUCKLAND 0627
GLOBALBUILD.NZ

KAIPARA DISTRICT
Kaipara te Oranganui • Two Oceans Two Harbours

KAIPARA DISTRICT COUNCIL

Private Utility Service As-Built Record

(Section 216, Building Act 2004)

Part A Consent Details (to be completed in all cases)

Building Consent Number 210441

Applicants Name .....

Applicants Mailing Address .....

.....

Site Address 53 Robert Hastie Drive Mangawhai.

Part B As Built Services Information (to be completed in relation to service provided, ticking each box as appropriate)

Wastewater - Pressure

(Pump Make/Model)_____

Connection Diameter	Pipe Material	Connection Type
☐ 40mm	☐ uPVC	☐ Public Utility Service Connection
☐ 50mm	☐ Vitrified Clay	☐ Septic Tank
☐ 80mm	☐ Concrete	☐ Other _____
☐ Other_____mm	☐ Other _____	

Wastewater - Gravity

Connection Diameter	Pipe Material	Connection Type
☐ 65mm	☑ uPVC	☐ Public Utility Service Connection
☐ 80mm	☐ Vitrified Clay	☐ Soak Hole
☑ 100mm	☐ Concrete	☐ Stream
☐ Other_____mm	☐ Other _____	☑ Other Septic

Wastewater - Disposal System Description

Septic Tank

Size: _____ litres

Type
- ☐ **Septic tank DECOMMISSIONED**
- ☐ Ecotank
- ☑ Biocycle

Effluent Field

Trench _____m

☐ Deep Soakhole

Depth _____m

Number of holes _____m

☐ Other _____

Sanitary Facilities

- ☐ Toilet Number_____
- ☐ Bidet Number _____
- ☐ Urinal Number _____

Waste Disposal Unit

- ☐ No
- ☐ Yes Type _____

Certification

I Kevin Wood. being

- ☐ Owner
- ☐ Occupier
- ☐ Craftsman plumber
- ☑ Registered drainlayer

Registration Number _____

Registration Number 14766

certify that this Private Utility Service As-Built Record is an accurate representation of the work carried out.

Kevin Wood
Signature

15-5-23.
Date

Stormwater

Pipe Diameter	Pipe Material	Connection Type
☐ 80mm	☑ uPVC	☐ Public Utility Service Connection
☑ 100mm	☐ Vitrified Clay	☑ Soak Hole
☐ 150mm	☐ Ductile Iron	☐ Stream
☐ 225mm	☐ Concrete	☐ Drain
☐ Other_____mm	☐ Other_____	☐ Other_____

Water Supply

Pipe Material - Cold

- ☐ uPVC
- ☐ Copper
- ☐ Polybutylene
- ☐ Other _____

Hot Water Cylinder

- ☐ High Pressure _____Litre
- ☐ Low Pressure _____Litre

Meter Type

Make _____Model_____

Pipe Material - Hot

- ☐ uPVC
- ☐ Copper
- ☐ Polybutylene
- ☐ Other _____

Diameter _____

Serial Number _____

Reading ☐☐☐☐☐☐☐☐ m³

(Quote all black figures inclusive of zeros only)

☐ **Note Part B As Built Services Information**

KAIPARA DISTRICT

Kaipara te Oranganui • Two Oceans Two Harbours

KAIPARA DISTRICT COUNCIL

Producer Statement Construction (PS3)

Construction

ISSUED BUILDING CONSENT NUMBER..... 210441 .....

THIS PS3 IS ISSUED BY: ..... Bream Bay Coatings (2015) LTD .....

TO: **KAIPARA DISTRICT COUNCIL**

IN RESPECT OF: .....

AT (Address): ..... LOT 81 THE SANCTUARY .....

..... MANGAWHAI HEADS .....

LEGAL DESCRIPTION - LOT.....DP .....SO .....

FROM: ..... (Installer),

LICENSED BY.....Reg./License No: .... 129163 ...

engaged by..... LINDA KELLOW .....(Owner/Builder)

In respect of clause(s) B1 and B2 of the Building Regulations 1992 for the building work described by the drawings and specifications prepared by the design firm titled;

.....

.....

.....

numbered.....

.....

authorised variation(s).....(copies attached)

have been issued during the course of the works.

I have sighted the issued building consent and read the conditions. As the contractor/builder I can confirm that the building works have been carried out in accordance with the requirements of the New Zealand Building Code, the conditions of the building consent, the design drawings and specifications and in accordance with the listed variations (if any).

I understand that if this producer statement is accepted, that it may be used to verify that the building work All / Part only as specified in the attached particulars, the subject of this building consent meets, based on reasonable grounds, the requirements of this building consent and the requirements of the Building Code in respect to clauses B1, B2, ...of the Building Regulations 1992.

☑ I understand and accept that Council may rely on this document, for the purposes of establishing compliance with the above building consent and that the content including the signature, whether electronic or not, is truly representative and authoritative of the information contained.

Name: CLARK SMITH Signature: ..... Date: 25/02/2022

Address: ..... 7 HILHEAD DRIVE ONE TREE POINT .....

Contractor/Applicator: ..... Bream Bay Coatings (2015) LTD .....

Telephone: 021552196 ...(bus) .....(home) Fax .....

File: 3117.03

PS.C
Version 1
Issued 1 March 2014

Form 6A

Memorandum from licensed building practitioner: Record of building work

Section 88, Building Act 2004

Please fill in the form as fully and correctly as possible.
If there is insufficient room on the form for requested details, please continue on another sheet and attach the additional sheet(s) to this form.

THE BUILDING

Street address: LOT 81 THE SANCTUARY	
Suburb:	
Town/City: MANGAWHAI HEADS	Postcode:

THE PROJECT

Building consent number: 210441	

THE OWNER(S)

Name(s): Mr & Mrs KENDALL	
Mailing address:	
Suburb:	PO Box/Private Bag:
Town/City:	Postcode:
Phone number: 0220 546323	Email address: linda.kendall@xtra.co.nz

EXTERNAL MOISTURE MANAGEMENT SYSTEMS		
Work that is restricted building work	**Description of restricted building work**	**Carried out or supervised**
Tick ✓	If necessary, describe the restricted building work.	Tick ✓ whether you carried out the restricted building work or supervised someone else carrying out the restricted building work.
Damp proofing ☐		○ Carried out ○ Supervised
Roof cladding or roof cladding system ☐		○ Carried out ○ Supervised
Ventilation system (for example, subfloor or cavity) ☐		○ Carried out ○ Supervised
Wall cladding or wall cladding system ☑	TO SUPPLY, FIX, PLASTER & PAINT SPECIALIZED EZPANEL AAC SYSTEM TO EXTERIOR	○ Carried out ✓ Supervised
Waterproofing ☐		○ Carried out ○ Supervised
Other ☐		○ Carried out ○ Supervised

ISSUED BY

Name and contact details of the licensed building practitioner who is licensed to carry out or supervise restricted building work.

Name: CLARK SMITH	LBP number: 129163
Class(es) licensed in: E 2.	
Plumbers, Gasfitters and Drainlayers registration number (if applicable):	
Mailing address (if different from below):	
Street address/Registered office: 7 HOLMGRE DRIVE LA POINTE	
Suburb: LA POINTE	Town/City: ONE TREE POINT
PO Box/Private Bag	Postcode:
Phone number:	Mobile: 021552196
After hours:	Fax:
Email address: plastering@bremboycoatings.co.nz	Website:

DECLARATION

I CLARK SMITH carried out or supervised the restricted building work recorded on this form.

Signature: _____

Date: 25/02/2022

NORTHERN FOUNDATIONS LTD.

Memorandum from licensed building practitioner: Record of building work

Section 88, Building Act 2004

Please fill in the form as fully and correctly as possible.
If there is insufficient room on the form for requested details, please continue on another sheet and attach the additional sheet(s) to this form.

THE BUILDING	
Street address: Lot 81, The Sanctuary	
Suburb:	
Town/City: Mangawhai	Postcode:

THE PROJECT
Building consent number: 210441

THE OWNER(S)	
Name(s): ACDL Trustee Ltd. D&L Kendall	
Mailing address:	
Suburb:	PO Box/Private Bag:
Town/City:	Postcode:
Phone number:	Email address:

RECORD OF WORK THAT IS RESTRICTED BUILDING WORK

PRIMARY STRUCTURE

Work that is restricted building work	Description of restricted building work	Carried out or supervised
Tick ✓	If necessary, describe the restricted building work.	Tick ✓ whether you carried out the restricted building work or supervised someone else carrying out the restricted building work.
Foundations and subfloor framing ☑	Foundations as per engineers specs.	✓ Carried out ✓ Supervised
Walls ☐		○ Carried out ○ Supervised
Roof ☐		○ Carried out ○ Supervised
Columns and beams ☐		○ Carried out ○ Supervised
Bracing ☐		○ Carried out ○ Supervised
Other ☐		○ Carried out ○ Supervised

EXTERNAL MOISTURE MANAGEMENT SYSTEMS		
Work that is restricted building work	**Description of restricted building work**	**Carried out or supervised**
Tick ✓	If necessary, describe the restricted building work.	Tick ✓ whether you carried out the restricted building work or supervised someone else carrying out the restricted building work.
Damp proofing ☑	Polythene underneath slab	✓ Carried out ✓ Supervised
Roof cladding or roof cladding system ☐		○ Carried out ○ Supervised
Ventilation system (for example, subfloor or cavity) ☐		○ Carried out ○ Supervised
Wall cladding or wall cladding system ☐		○ Carried out ○ Supervised
Waterproofing ☐		○ Carried out ○ Supervised
Other ☐		○ Carried out ○ Supervised

ISSUED BY

Name and contact details of the licensed building practitioner who is licensed to carry out or supervise restricted building work.

Name: Jason Wright	LBP number: 126479
Class(es) licensed in:	
Carpentry	
Plumbers, Gasfitters and Drainlayers registration number (if applicable):	
Mailing address (if different from below):	
Street address/Registered office:	
Suburb:	Town/City:
PO Box/Private Bag	Postcode:
Phone number:	Mobile: 021975279
After hours:	Fax:
Email address: sales@northernfoundations.co.nz	Website:

DECLARATION

I Jason Wright carried out or supervised the restricted building work recorded on this form.

Signature: 

Date: 27/10/2021

PRODUCT ASSURANCE SUPPLIER STATEMENT
pass™ no: 19113 | Expires: 04/2022

CODEMARK™ CM70096

GLOBALBUILD.NZ

KRONOSPAN OSB BARRIER

PURPOSE

Kronospan OSB Barrier (OSB Barrier) is supplied for use as a bracing element, which when combined with a flexible underlay, provides a rigid underlay that acts as a vapour and air barrier with weathertight properties.

EXPLANATION

Kronospan OSB Barrier is an oriented strand board (OSB/3), manufactured from waterproof, heat-cured adhesives and rectangularly shaped wood strands that are arranged in cross-oriented layers.

OSB is a strong, dimensionally stable panel that resists deflection, delamination and warping. The panels also resist racking and shape distortion when subjected to wind and seismic conditions. Relative to their strength, OSB panels are light in weight and easy to handle and install.

OSB/3 is defined under EN 300 as suitable for load-bearing conditions and for use in humid conditions. Humid refers to environments where panels are protected from external conditions but where moisture content can increase because of humidity.

OSB Barrier is supplied untreated or envelope treated (LOSP) in NZ in accordance with AS/NZS 1604.2 to meet the requirements of hazard class H3.1.

The panels are available in the following sizes:

- 2400 x 1200 x 9 mm
- 2440 x 1220 x 9 mm
- 2700 x 1200 x 9 mm
- 2740 x 1220 x 9 mm.

kronospan



For further assistance please contact:

WE COMPLY s14G BUILDING ACT 2004

+64 21 487007
Interior.install@xtra.co.nz
www.globalbuild.nz

SCOPE AND LIMITATIONS OF USE

Scope	Limitations
Location	
In wind zones up to and including extra high as defined in NZS 3604:2011 or to a wind design pressure (ULS) of 2.6 kPa.	› Where the ULS exceeds 2.1 kPa, the primary structure must be specifically engineered in accordance with B1/VM1.
In all exposure zones as defined in NZS 3604:2011.	› Fixing material selection to be in accordance with section 4, NZS 3604:2011.
In all seismic zones.	
Greater than 1 m from a relevant boundary.	
Building	
In buildings where the relevant structure complies with the NZ Building Code or where the designer and installer have satisfied themselves that the existing structure is suitable for the intended building work.	› The building height must be less than 10 m unless specifically designed with respect to fire.
On timber or lightweight steel framing.	
As a wall bracing element.	› OSB Barrier must be installed on timber framing. › Installation is to be in accordance with the relevant Scion test assembly.
As a rigid air barrier.	› OSB Barrier must be installed in conjunction with a flexible building wrap and a drained ventilated cavity that complies with all relevant provisions of the building code. The wrap must be compatible with LOSP treatment where applicable. › OSB Barrier must also be installed in conjunction with an external cladding system and joinery that complies with all relevant provisions of the NZ Building Code. › Where installed behind an open-jointed rainscreen, a flexible building wrap and tape must be installed. The wrap and tape must be compatible with LOSP treatment where applicable. › Where installed over lightweight steel framing, a thermal break is required.
Internally as part of a wall assembly or as an internal lining.	› Where used in areas prone to water splash, a waterproof membrane must be applied. › If to be used internally and left exposed, OSB Barrier may only be used where a minimum performance as described by material group number 3 is required.

OTHER CERTIFICATIONS AND APPROVALS HELD BY GLOBAL BUILD

- RINA Services S.p.A. [21/03/2019] *PEFC ST 2002:2013.* Certificate no. RINA-PEFC-CoC-18.
- British Board of Agrément (BBA). [26/04/2016] *Kronospan OSB/3 for sheathing.* 07/4498 Product sheet 3.
- British Board of Agrément (BBA). [26/04/2016] *Kronospan OSB/3 for sheathing.* 13/4498 Product sheet 3.
- British Board of Agrément (BBA). [26/04/2018] *Kronospan OSB/3 for sheathing.* 18/5480 Product sheet 3.
- PFS TECO. [01/11/2018] *Certificate of PS2-10 Approval. Performance Standard for wood-based structural use panels. Canadian Standards Association.*

USEFUL INFORMATION

For information on the design, installation and maintenance of OSB Barrier and for our warranty refer to **www.globalbuild.nz**.

VERSION: V4.0

CONDITIONS OF USE

- OSB Barrier must be used in conjunction with the fixing system specified in the GlobalBuild NZ OSB Barrier Design and Installation Guide.
- Where fire obligations apply, OSB Barrier must be specifically designed with respect to fire.
- Where exposed to the weather, OSB Barrier must be wrapped in a flexible building wrap within 14 days where untreated and 30 days where treated.

PERFORMANCE CLAIMS

If designed, installed and maintained in accordance with all GlobalBuild NZ requirements, OSB Barrier will comply with or contribute to compliance with the following performance claims:

NZ Building Code clauses	BASIS OF COMPLIANCE[1]	
	Compliance statement	Demonstrated by
B1 Structure B1.3.1, B1.3.2, B1.3.3 (a, e, f, h, q) B1.3.4 (a, b, c, d, e) **B2 Durability** B2.3.1 (a, b) B2.3.2 (a) **E2 External Moisture** E2.3.2 E2.3.5 **F2 Hazardous Building Materials** F2.3.1	Product Certification CodeMark Certificate. CODEMARK™ CM70096	CodeMark Certificate is issued by Bureau Veritas. Bureau Veritas is an accredited product certification body under section 263 of the Building Act 2004.

1. The Compliance Statement is the pass holder's statement that they have met their obligations under s14G(2) of the Building Act 2004.

BASIS OF CERTIFICATION

Technical

- APA. [02/2009] *Water Vapor Permeance of Wood Structural Panels and Wood Wall Construction.* Number J450. Retrieved from https://www.norbord.com/na/wp-content/uploads/2017/07/Moisture-Vapor-and-Perms-J450.pdf. [Accessed 24/07/2020].
- British Board of Agrément (BBA). [26/04/2018] *Kronospan OSB/3 for sheathing.* 18/5480 Product sheet 3.
- Drevarsky ustav Timber Institute. [28/01/2019] *Certificate of conformity of the factory production control.* Certificate 1393-CPR-0522 to EN 13986:2004+A1:2015.
- Kronospan. [11/2018] *Declaration of performance.* No. 1393-CPR-0522. V1.
- Independent Verification Services (IVS). [20/03/2020] *Timber Testing Report.* Reference 50198.
- Kronospan. [06/01/2015] *Oriented Strand Board Technical Data.* Reference KC/QUAL/DOC/0025.
- Global Build NZ. (n.d) Kronospan OSB Barrier Design and Installation Guide. V1.0.
- PFS TECO . [01/11/2018] *Certificate of PS2-10 Approval. Performance Standard for wood-based structural use panels. Canadian Standards Association.*
- Scion. [28/02/2020] P21:2010. *9 mm Kronospan OSB 10 mm 400 wall with brackets.*
- Scion. [28/02/2020] P21:2010. *9 mm Kronospan OSB 10mm GIB standard 1200 wall with brackets.*
- Scion. [28/02/2020] P21:2010. *9 mm Kronospan OSB 10 mm GIB standard 400 wall with brackets.*
- Scion. [28/02/2020] P21:2010. *9 mm Kronospan OSB 10 mm GIB standard 600 wall with brackets.*

Quality

- Bureau Veritas. Audit of Kronospan manufacturing facilities.
- Bureau Veritas. Review and audit of Global Building NZ quality plan.

Buildability

- Bureau Veritas. Site audits.

2. Sources of information also include the Building Act 2004 and its regulations, including the Building Code (Schedule 1 of the Building Regulations 1992), Acceptable Solutions and Verification Methods, and relevant cited standards.

Scan or click this QR code for a full download of Compliance Documentation for this pass™.
www.globalbuild.nz

VERSION: V4.0 **DATE:** 22/04/2021

Note: Uncontrolled in printed format.

NAME: Brad Smith

POSITION: Director

Signed on behalf of Global Build NZ:

Brad Smith

Digitally signed by Brad Smith
Date: 2021.04.22 14:08:18 +12'00'

By signing this pass™ the signatory confirms that, in respect of the subject of this pass™, the company has met their s14G obligations under the Building Act 2004.

pass

This Product Assurance Supplier Statement (pass™) has been prepared by TBB in accordance with MBIE PTS guidelines and the recommendations of s9.2, Determination No. 2019-011 (issued 12 April 2019). TBB is ISO9001:2016 certified. Copyright © 2017, The Building Business Limited (TBB). All rights reserved.

Kronobuild®



OSB barrier Design and Install Guide

Oriented Strand Board OSB

CONTENTS

1.0 GENERAL.....4

1.1. Purpose of guide.....4

1.2. Important Documents.....4

1.3. Skills required.....4

1.4. For more help.....4

1.5. For our warranty.....4

2.0 OSB barrier.....5

2.1. What is OSB.....5

2.2. Advantages.....5

2.3. Description.....5

2.4. GlobalBuild assurance statement.....5

3.0 DESIGN.....6

3.1. Design Considerations.....6

3.1.1. Confirm Scope.....6

3.1.2. Establish Substrate Suitability..6

3.1.3. Bracing Element.....6

3.1.3.1 Bracing Element fixing.....8

3.1.3.1.(A) Bracing Element fixing.....9

3.1.4. Fixings.....10

3.1.5. Top Plate Truss Connection...10

3.1.6. Lintel Tie Down Connection...10

3.1.7. Bottom plate Connection.....10

3.1.8. GIB Handibrac ® Installation..10

3.1.9. Rigid Air barrier 11

4.0 PRE-INSTALLATION.....12

4.1. Health & safety.....12

4.2. Handling & storage.....12

5.0 INSTALLATION.....13

5.1. Key documents.....13

5.2. Tools & other product requirements.13

5.2.1. Tools.....13

5.2.2. Other Products.....13

5.3. Confirm scope.....13

5.4. Check building and substrates.....13

5.5. Cutting & drilling panels.....13

5.6. Confirm scope.....14

5.7. Finishing.....14

6.0 MAINTENANCE.....15

6.1. General maintenance requirements.15

7.0 TECHNICAL DETAILS.....16

8.0 NOTES.....17

CODEMARK™
CM70096

pass

WE COMPLY s14G BUILDING ACT 2004

OSB - wood perfected



1.0 GENERAL

1.1. Purpose of guide

This guide provides advice on handling, installing and maintaining GlobalBuild NZ's Kronospan OSB barrier (OSB barrier).

1.2. Important Documents

This guide must be read in conjunction with the:

- GlobalBuild OSB barrier warranty.

1.3. Skills required

To install OSB barrier, the installer must, at a minimum, be a competent DIYer.

Where OSB barrier is specified by a designer, the designer shall have the appropriate skills, knowledge of the product and access to all OSB barrier technical information (refer to www.globabuild.nz).

Where Restricted Building Work (RBW) applies the designer or installer must either be a Licensed Building Practitioner (LBP) or be supervised by an LBP with the applicable licence.

1.4. For more help

Technical assistance is available at interior.install@xtra.co.nz.

While all reasonable efforts have been made to ensure the accuracy of information provided, this is a guide only, and it may be subject to change.

1.5. For our warranty

Refer to www.globabuild.nz.



2.0 OSB barrier

2.1. What is OSB

OSB barrier is manufactured of high quality softwood from sustainable forests, primarily spruce. The thin, large-sized veneer strands are dried carefully and blended within the production process with a mixture of synthetic resins and paraffin emulsion.

The panels are pressed with a continuous, uninterrupted production process, using high pressure and temperatures.

Due to its excellent strength, OSB is suited perfectly for a large range of applications, from packaging to construction purposes.

2.2. Advantages

- Environmentally friendly wood-based panel for universal applications in interior and protected exterior conditions.
- High dimensional stability, homogeneity and even density profile.
- Excellent bending, compression and tensile strength.
- High vapor diffusion resistance and thermal insulation benefits.
- 100% Recyclable.

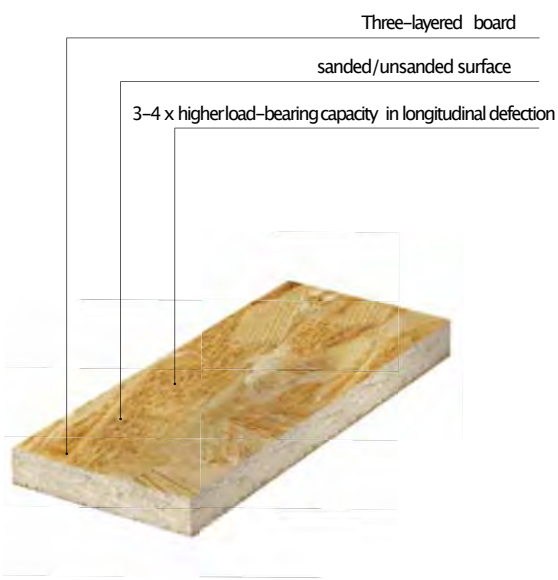

2.3. Description

OSB barrier is manufactured to EN 13986:2004+A1 to meet the requirements of OSB/3. This category is suitable for load-bearing conditions and for use in humid conditions. Humid refers to environments where panels are protected from external conditions but where moisture content can increase because of humidity.

OSB barrier is available as either untreated or treated (H3.1) panel. The H3 panel is LOSP envelope treated in NZ to meet the Hazard class H3.1 and is identified by the green edge colour and identifying stamp . Durability when used as a bracing element relies on the OSB barrier and connections to remain dry whilst in service and the OSB barrier not being exposed to high humidities*, liquid water or high temperatures.

OSB should be protected against prolonged exposure to excess moisture.

Panels are supplied in the following sizes:

- 2400 x 1200 x 9 mm
- 2440 x 1220 x 9 mm
- 2700 x 1200 x 9 mm
- 2740 x 1220 x 9 mm.

and for use as:

- an internal and protected external wall bracing element
- a rigid air barrier.

*Areas of high humidity include sauna rooms and similar.

2.4. GlobalBuild assurance statement

For scope, limitations and assurance refer to the Kronospan OSB barrier pass™.

3.0 DESIGN



3.1. Design Considerations

3.1.1. Confirm scope

Ensure the project falls within the allowed scope and limitations for the intended use, in particular suitability of the building and the structural framing support.

3.1.2. Establish substrate suitability

Ensure that the substrate to which the OSB barrier is to be fixed is suitable for the installation of the OSB barrier especially if it is to be used as a bracing element.

3.1.3. Bracing element

Bracing capacities are as follows:

Table 1 - P21 Ratings 2400mm High Kronospan OSB Barrier Wall Elements

BRACE CODE	WALL SIZE	WIND BU/m	EQ BU/m	DESCRIPTION OF ASSEMBLY	HOLD DOWN FIXINGS
KOSB-400	400 X 2400mm	89	111	OSB BARRIER PANELS FIXED TO ONE SIDE 90 X 45 H1.2 SG8 FRAMING. STUDS AT MINIMUM 400mm CENTRES, NO NOGS.	M12 BOLTS TO GIB HANDIBRACS AND BOTTOM PLATE. GIB HANDIBRAC TO EACH END.
KOSB-600	600 X 2400mm	91	104	OSB BARRIER PANELS FIXED TO ONE SIDE 90 X 45 H1.2 SG8 FRAMING STUDS AT MINIMUM 400mm CENTRES, NO NOGS.	M12 BOLTS TO GIB HANDIBRACS AND BOTTOM PLATE. GIB HANDIBRAC TO EACH END.
KOSB-1200	1200 X 2400mm	123	107	OSB BARRIER PANELS FIXED TO ONE SIDE 90 X 45 H1.2 SG8 FRAMING. STUDS AT MINIMUM 400mm CENTRES, NO NOGS.	M12 BOLTS TO GIB HANDIBRACS AND BOTTOM PLATE. GIB HANDIBRAC TO EACH END.
KOSB-400G	400 X 2400mm	100	120	OSB BARRIER PANELS FIXED TO ONE SIDE 90 X 45 H1.2 SG8 FRAMING. 10MM GIB STANDARD PLASTERBOARD TO OTHER SIDE STUDS AT MINIMUM 400mm CENTRES, NO NOGS.	M12 BOLTS TO GIB HANDIBRACS AND BOTTOM PLATE. GIB HANDIBRAC TO EACH END.
KOSB-600G	600 X 2400mm	127	143	OSB BARRIER PANELS FIXED TO ONE SIDE 90 X 45 H1.2 SG8 FRAMING. 10MM GIB STANDARD PLASTERBOARD TO OTHER SIDE STUDS AT MINIMUM 600mm CENTRES, NO NOGS.	M12 BOLTS TO GIB HANDIBRACS AND BOTTOM PLATE. GIB HANDIBRAC TO EACH END.
KOSB-1200G	1200 X 2400mm	179	157	OSB BARRIER PANELS FIXED TO ONE SIDE 90 X 45 H1.2 SG8 FRAMING. 10MM GIB STANDARD PLASTERBOARD TO OTHER SIDE STUDS AT MINIMUM 600mm CENTRES, NO NOGS.	M12 BOLTS TO GIB HANDIBRACS AND BOTTOM PLATE. GIB HANDIBRAC TO EACH END.

Note:

1. Table compiled based on Scion P21 testing.
2. BU Wind value as limited by the serviceability load capacity.
3. BU Earthquake value as limited by the ultimate load capacity.
4. NZS 3604 limits bracing ratings for walls on timber floors to 120 BU/m and for concrete floors to 150 BU/m.



3.1.3.1. Bracing element fixing

Bracing element fixings are as follows:

1. KOSB - OSB barrier to one side

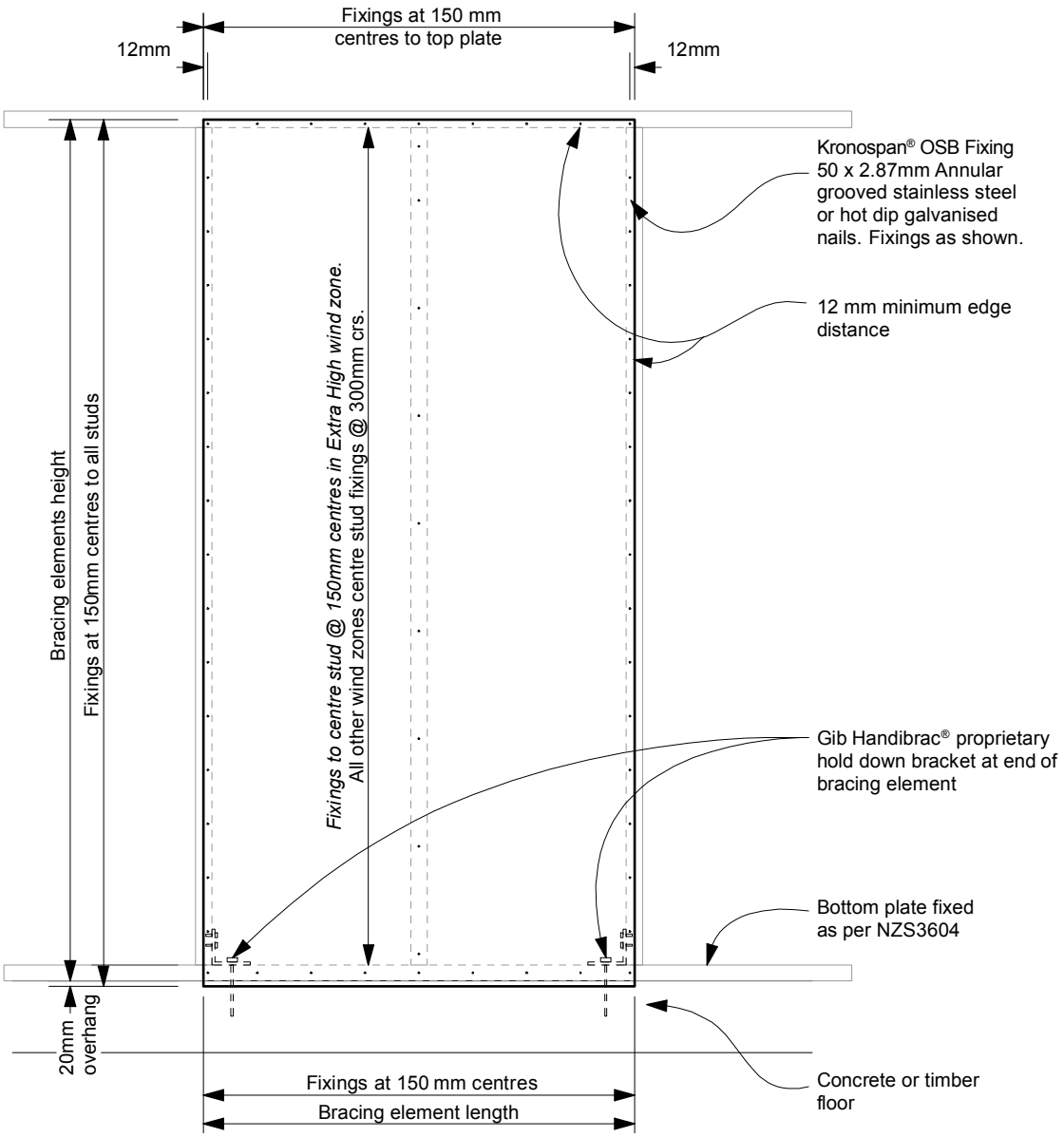

3.1.3.1.(A) Bracing element fixing

Bracing element fixings are as follows:

1. KOSB-G OSB barrier to one side and 10 mm GIB to other side

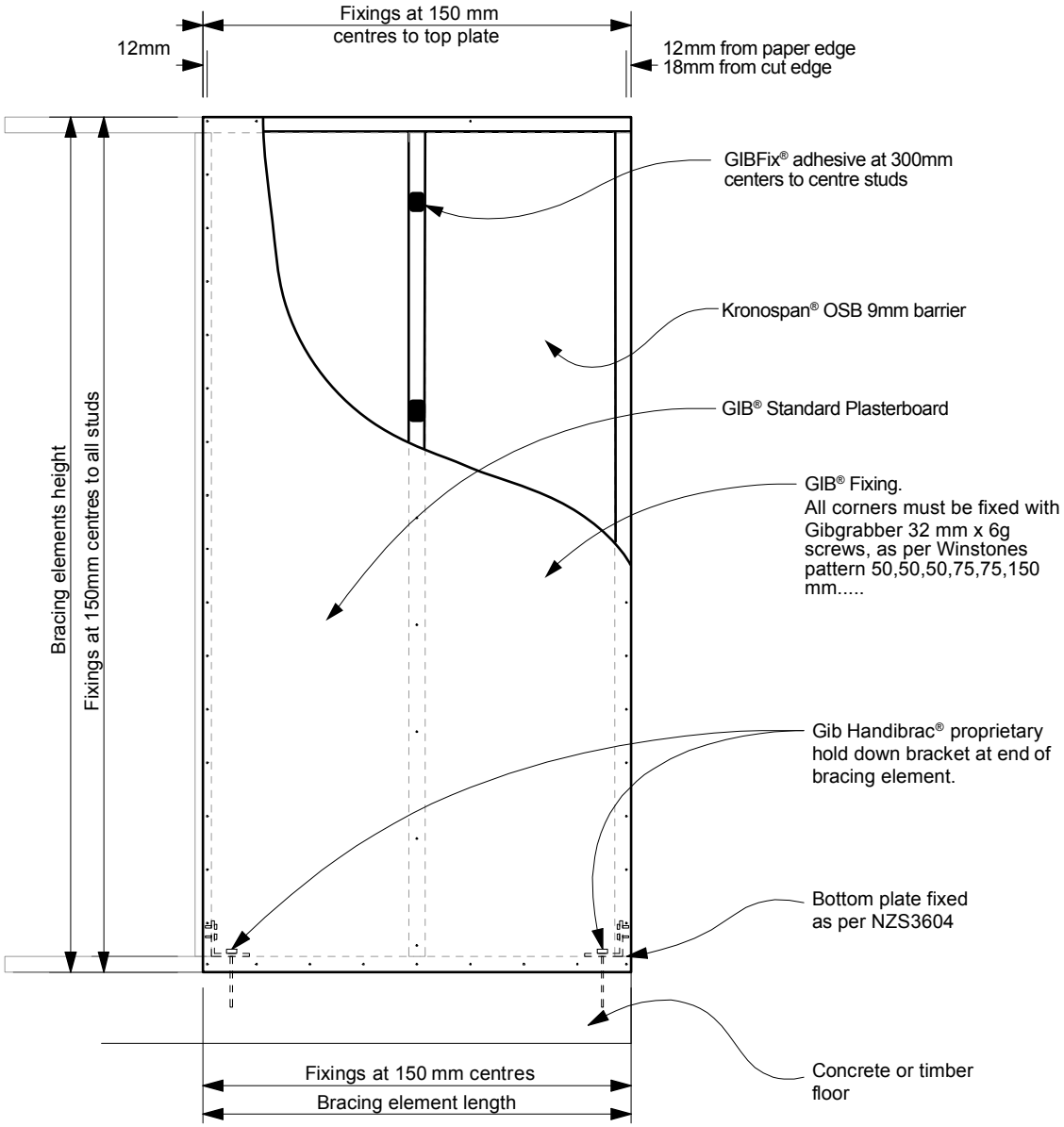

3.1.4. Fixings

Table 2 - Fixings

KRONOSPAN® OSB BARRIER	As per Section 5.6.1
GIB® PLASTERBOARD	Gibgrabber® 32mm x 6g screws to Winstones pattern 50,50,50,75,75,150mm .....
HOLD DOWN	M12 Hold down bolts or screws to GIB Handibracs® and bottom plate. GIB Handibrac® to each end.

3.1.5. Top Plate Truss Connection

Standard fixing of Kronospan OSB barrier to the top plate in accordance with with 3.1.3.1(A) Bracing Element fixing, will transfer the uplift loads to the bottom plates.

Refer to NZS 3604 Table 8.18 for uplift connections between top plate and truss framing.

3.1.6. Lintel Tie Down Connection

As an alternative to strap fixing as detailed in NZS 3604 fig 8.12. The following fixing detail may be used where the uplift does not exceed 7.5 kN.

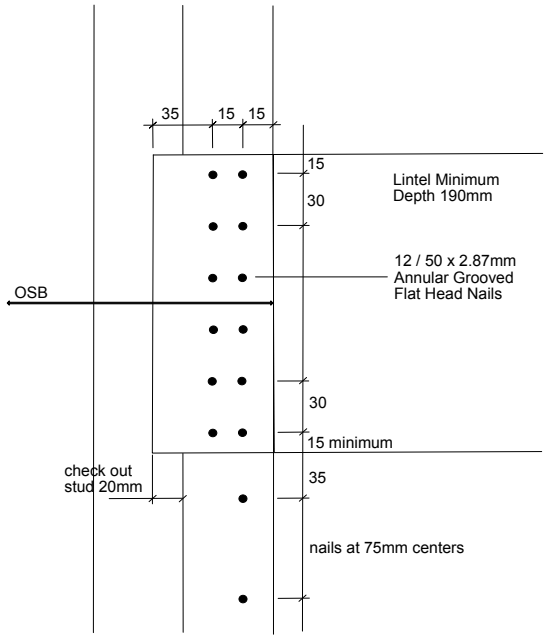

KRONOSPAN OSB LINTEL FIXING DETAIL

7.5 KN CONNECTION
DOUBLING STUD FIXING DETAILS TO NZS3604 FIG 8.12

3.1.7. Bottom plate Connection

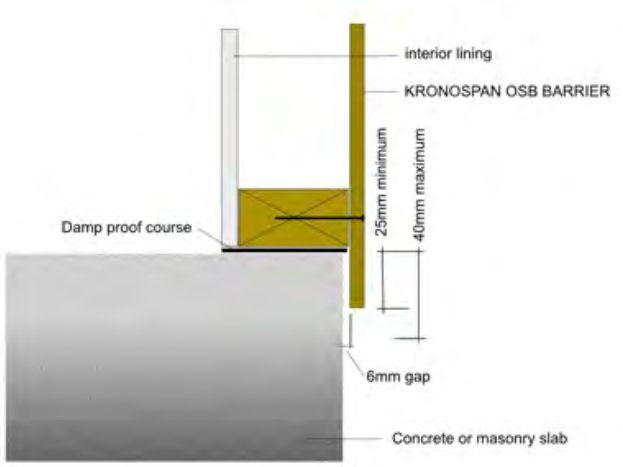

3.1.8. GIB Handibrac ® Installation

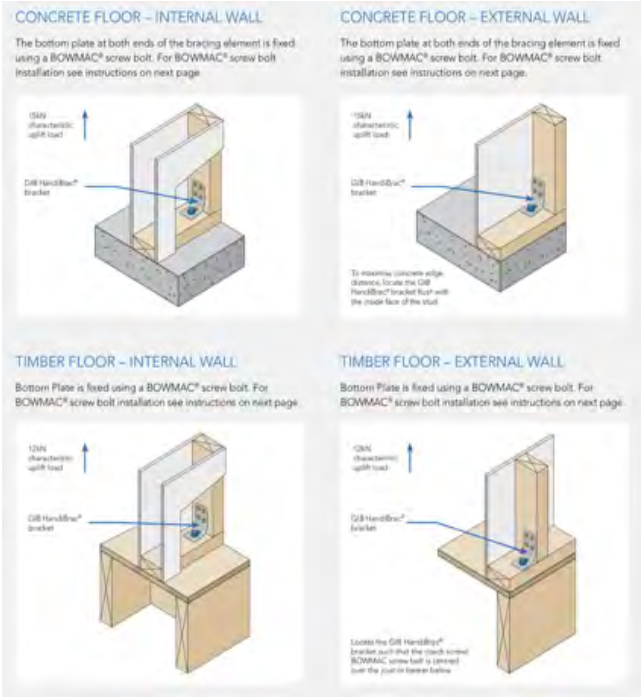

3.1.9. Rigid Air Barrier

To specify OSB barrier as a rigid air barrier requires installation to E2/AS1 paragraph 9.1.7.2 modified as follows:

- The bottom edge of the panel must extend a minimum of 20 mm below the bottom plate where used in conjunction with a cavity system.
- To be installed with a drained ventilated cavity and cladding system that complies with the relevant provisions of the NZBC.
- Where installed over lightweight steel framing a thermal break is required.
- OSB barrier is not intended for use as a temporary cladding, without the addition of a code compliant building wrap.
- OSB should be completely dry prior to installing internal linings and the balance of the external envelope.
- Where exposed to the weather, OSB Barrier must be wrapped in a flexible building wrap within 14 days where untreated, and 30 days where treated.
- During construction best building practices should be followed and prolonged exposure to moisture should not occur.
- Flexible building wraps and tapes must be LOSP compatible if used with treated panels and installed in accordance with the manufacturers instructions.



4.0 PRE-INSTALLATION

4.1. Health & safety

Take all necessary steps to ensure your safety and the safety of others:

- Ensure adequate ventilation or mechanical dust extraction when cutting or drilling
- Ensure the panels are well supported when cutting
- Wear appropriate safety equipment, including clothing, footwear and safety glasses
- Use all tools in accordance with the relevant instruction manuals
- Clear the work area of any obstructions before work starts
- Ensure edge protection and/or appropriate scaffold is installed where working at height.

For further information refer to:

- WorkSafe. (7/2018) Small Construction Sites, The Absolutely Essential Health and Safety Toolkit.
- WorkSafe. (12/2016) Health and Safety at Work, Quick Reference Guide.

4.2. Handling & storage

Take care when transporting, handling and storing OSB barrier to avoid damaging the panels. The panels must be protected from direct exposure to water, especially the edges. The panels must be secured with care to avoid damage by fastening ropes, belts and or strapping.

Panels are delivered to site strapped on skids. Unloading is likely to be carried out mechanically. A forklift is recommended as opposed to a crane or hi-ab. If a crane or hi-ab is to be used a spreader bar is required.

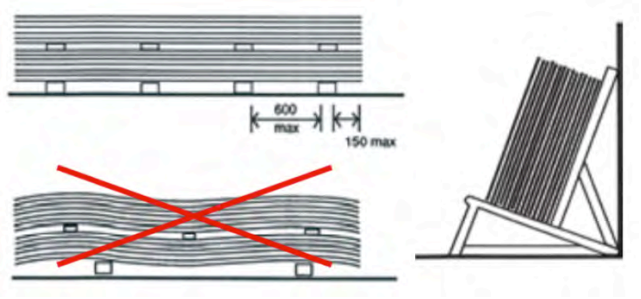

Store panels horizontally on a dry surface at least 150 mm off the ground supported by spacers that are orientated in the direction of the minor axis with a maximum spacing of 600 mm. The spacers must be at least the length of the panel width.

Insert another row of spacers after each 20 – 25 panels to ensure adequate ventilation. Spacers must be placed directly above lower spacers.

Insert additional spacers for the H3 treated panels to allow additional ventilation.

Ensure the area where the panels are stored is dry, well-ventilated, out of direct sunlight and away from any heat source. It is also recommended that the panels are protected from weather.





5.0 INSTALLATION

5.1. Key documents

Refer to the building consent documentation where applicable and the pass™ and this document.

5.2. Tools & other product requirements

5.2.1. Tools

- Fine-tooth hand saw, power saw or hand or table circular saw.
- Drill.
- Nail gun.
- Hole saw and speed bits.
- Moisture meter (where exposed to moist conditions).

5.2.2. Other products

- Tapes: LSOP Compatible flashing tape
- Flexible building wrap: LOSP compatible
- Fixings;
    - 50 x 2.87 mm angular groove gun nails - Stainless and or Galvanised as per zone requirements
    - Gib® grabber® 32 mm x 6 g screws
    - M12 hold down bolts
    - GIB® Handibrac®

5.3. Confirm scope

Ensure the project falls within the allowed scope and limitations for the intended use, in particular the structural framing support.

5.4. Check building and substrates

- Ensure that the timber framing, to which the OSB barrier is to be fixed has an 18 % MC or less.
- Ensure framing is minimum gauge 90 x 45 mm, or 0.55 mm where light gauge steel framing is used.
- Where used as a wall bracing, ensure studs are plumb, true and spaced correctly.

5.5. Cutting & drilling panels

Panels may be cut and drilled with common hand tools or machining tools. Ensure that the blade is sharp; hard metal edges are more suitable.

Where using a circular saw ensure setting is as low as possible. The feeding rate should be slightly lower than for solid timber.

Fix the boards to minimise movement through movement.

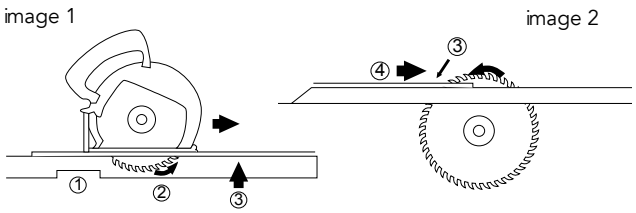

image 1. hand-held circular saw cutting:
image 2. table circular saw:

1. saw support
2. the direction of rotation of the saw blade
3. upper or decorated face
4. the shift direction of boards (feed)



5.6. Confirm scope

5.6.1. General installation requirements

All panels must be installed with the sheet edges fixed over solid framing.

Ensure nails are finished flush with the panel surface. Adjust gun setting to suit.

Panels are to be fixed as follows:

- 50 x 2.87 mm angular groove gun nails,
- 150 mm centres around the panel perimeter,
- 300 mm centres within body of panel up to an including very high wind zone or 150 mm centres for Extra High wind zone locations,
- 2 – 3 mm expansion gap required between all panels.

5.6.2. Install Wall Bracing

Refer to plans and specifications for location and installation requirements.

5.6.3. Install Rigid Air barrier

Panels installed as per section 5.6.1.

The panels finish with the bottom edge extending a minimum of 20 mm below the bottom plate.

Cavity battens must be fixed at maximum 600 mm centres.

The installation of a flexible building wrap is installed in accordance with paragraph 9.1.7.1, E2/AS1.

Flashings & Penetrations: Installation of flashings and weatherproof tape are in accordance with Section 9 E2/AS1.

5.7. Finishing

The selected cladding should be installed and finished within the selected building wrap requirements.





6.0 MAINTENANCE

6.1. General maintenance requirements

Under normal conditions, OSB barrier will need no maintenance as long as

- the external cladding has been maintained or
- the internal decorative coating has been maintained.





7.0 TECHNICAL DETAILS

KRONOSPAN TRADING S.R.L.
Str. Mihail Kogălniceanu Nr. 59, et.1, cam.1/12 • Sebeş • 515800 • Alba • România
Tel.: +40 258 801 100 • Fax: +40 258 801 199
office.ro@kronospan.ro • www.kronospan.ro

J1/ 903/ 2018 • RO 11894313
Capital social subscris 676653,78 LEI

FIŞĂ TEHNICĂ / *TECHNICAL SHEET*

PLĂCI PORTANTE PENTRU UTILIZARE ÎN MEDIU UMED OSB3 Superfinish/ *LOAD-BEARING BOARDS FOR USE IN HUMID CONDITIONS OSB3 Superfinish*

No. Crt.	Property	Unit	Thickness range (mm)					Test/ requirement standard
			6 to 10	>10 to <18	18 to 25	>25 to 32	>32 to 40	
1	Rezistenţă la încovoiere - Sens longitudinal Bending strength - Longitudinal Direction	N / mm²	≥ 22	≥ 20	≥ 18	≥ 16	≥ 14	EN 310 EN 300
2	Rezistenţă la încovoiere - Sens transversal Bending strength - Transversal Direction	N/ mm²	≥ 11	≥ 10	≥ 9	≥ 8	≥ 7	EN 310 EN 300
3	Modul de elasticitate la încovoiere – longitudinal Modulus of elasticity in Bending – Longitudinal Direction	N/mm²	≥ 3500	≥ 3500	≥ 3500	≥ 3500	≥ 3500	EN 310 EN 300
4	Modul de elasticitate la încovoiere – transversal Modulus of elasticity in Bending – Transversal Direction	N/mm²	≥ 1400	≥ 1400	≥ 1400	≥ 1400	≥ 1400	EN 310 EN 300
5	Coeziune internă Internal Bond	N / mm²	≥ 0,34	≥ 0,32	≥ 0,30	≥ 0,29	≥ 0,26	EN 319 EN 300
6	Umflare în grosime 24 h Swelling in thickness –24 h	%	≤ 15	≤ 15	≤ 15	≤ 15	≤ 15	EN 317 EN 300
7	Toleranţă la dimensiuni nominale - grosime Thickness tolerances	mm	±0,8					EN 324-1 EN 300
8	Toleranţă la dimensiuni nominale - latime si lungime Length and width tolerance	mm	±3,0					EN 324-1 EN 300
9	Toleranţa a rectitudinii muchiilor Egde straightness tolerance	mm/m	+/- 1,5					EN 324-2 EN 300
10	Toleranţă a perpendicularităţii Squareness	mm/m	2,0					EN 324-2 EN 300
11	Umiditate Moisture content	%	2 to 12					EN 322 EN 300
12	Coeziune interna dupa incercare la apa fierbinte Internal bond after boil test	N/mm²	0,15	0,13	0,12	0,06	0,05	EN 1087-1 EN 300
13	Emisia de aldehidă formică Formaldehyde emission	mg/100g	≤ 2					EN 12460-5 *EN 300*

Consultaţi arhitectul sau proiectantul dumneavoastră în privinţa stabilirii solicitărilor şi utilizării în acord cu standardele naţionale sau conform codurilor de proiectare pe baza valorilor date mai sus. Contactaţi departamentul nostru tehnic pentru detalii.

Consult your design engineer to establish applicable loadings and spans according to local standards or design codes using the above values. Contact our technical department if you have the need for more detailed information.

Lab Manager, ...

Societatea Comercială KRONOSPAN TRADING S.R.L. RO 11894313 J1/903/2018 2 Sebeş - România

Production Manager, ...

FT 805 – Fişa tehnică OSB 3 Superfinish , Ediţia 1, Revizia 0 din 01 Noiembrie 2018, Elaborat SL, Aprobat DP

8.0 NOTES



KAIPARA DISTRICT

Kaipara te Oranganui • Two Oceans Two Harbours

KAIPARA DISTRICT COUNCIL

Producer Statement Water Proof Construction (PS3B)

Water Proof Construction

ISSUED BUILDING CONSENT NUMBER....210441.....

THIS PS3b IS ISSUED BY: ...Mark Maelzer.....

TO: **KAIPARA DISTRICT COUNCIL**

IN RESPECT OF: Linda and Dave Kendall

AT (Address): ...53 Robert Hastie Drive.....

.....Mangawhai.....

LEGAL DESCRIPTION - LOT 81 DP 556753 SO .....

FROM: Purecraft tiling Ltd (Water Proof membrane Applicator),

LICENSED BY Mapei Reg./License No: 2267

engaged by Coastal Homes (~~Owner~~/Builder)

In respect of clause(s) E2 and E3 and B2 of the Building Regulations 1992 for the building work described by the drawings and specifications prepared by the design firm titled;

.....

.....

.....

numbered.....

.....

I have sighted the issued building consent and sighted the waterproofing details and have inspected the substrate to which the membrane is to be applied and found it to be satisfactory. As a licensed water proof membrane applicator I can confirm that the application of the membrane has been carried out in accordance with the requirements of the New Zealand Building Code, the manufacturer's specifications and requirements.

I understand that if this producer statement is accepted, that it may be used to verify that the building work All / Part only as specified in the attached particulars, the subject of this building consent meets, the requirements of this building consent and the requirements of the Building Code in respect to clauses E2 and E3 and B2 of the Building Regulations 1992.

☑ I understand and accept that Council may rely on this document, for the purposes of establishing compliance with the above building consent and that the content including the signature, whether electronic or not, is truly representative and authoritative of the information contained.

Name: Mark Maelzer Signature: [signature] Date: 17/5/22

Address: 55 Nukuroa Rd, Topuni

Contractor/Applicator: Mark Maelzer

Phone: — (bus.) 0273104848 (home) Fax —

Please find attached the 15 year product and the 5 year workmanship warranties to the property owners.

File: 3117.03

A Rated Waste Water Services Ltd
52 Fork Road
RD 1
KUMEU 0891
AUCKLAND
09 412 7588 or 027 273 6967
aratedwws@xtra.co.nz

Accredited Service Agent for

bioCYCLE

"Turn Your Ones and Twos into Trees"

SERVICING & MAINTENANCE CONTRACT

Customer Register/Tank Number **Biocycle Model #**_____

THIS AGREEMENT is between
A RATED WASTE WATER SERVICES LTD (the Company)
Registered office: 52 Fork Road, RD 1, Kumeu 0891, Auckland
and
DAVE & LINDA KENDALL (the Customer) of ***MANGAWHAI*** (area)

is for the maintenance of your waste water treatment system installed at :

Site address: ***53 ROBERT HASTIE DRIVE, MANGAWHAI***

Postal address: ***PO Box 401094, MANGAWHAI HEADS.***

Landline Phone Number: ..... Mobile Number: ***022 054 6323 LINDA***

Email Address: .....

Which shall operate under the following terms and conditions:

1. Once each six (6) months of the term agreed, the Company shall inspect the system and carry out the following work:
   (a) Check and adjust air intake where necessary.
   (b) Clean where necessary the inside of the tank from which the irrigation network runs.
   (c) Check the blower, irrigation pump and electrical system, including the alarm system.
   (d) Monitor and maintain the balance of purifiers.
   (e) Clean the irrigation discharge lines and repair defective drippers at Customer's expense.
   (f) Report to the Customer and local authority of any problems that which have arisen.
   (g) Check and if necessary clean the irrigation filter. If filter needs replacing this would be at Customer's expense. Regular cleaning of the irrigation filter is the responsibility of the homeowner and should be done on a monthly basis.
   (Cleaning of the irrigation filters on a monthly basis can be carried out by A Rated Waste Water Services Ltd at an extra charge of **$60.00 (incl GST)** – this will be additional to the service cost as per paragraph 5 below.)

2. In the event of the alarm system becoming active, the customer will notify the authorised Biocycle agent **A Rated Waste Water Services Ltd,** telephone **Kevin Carr on 09 412 7588 or 027 273 6967** and advise that the system has malfunctioned. **A Rated Waste Water Services Ltd** will undertake to attend the call within 48 hours of receiving the advice that the alarm system has activated, or that there is a malfunction of the system.

..../2

3. If the customer requests the Company to carry out work to the system other than in Clause 1. above, or that covered by the guarantee, then the Customer will have to pay the Company's reasonable additional charges for such work and any necessary materials. Travel kilometres and call out fees will be additional to the above. Also the customer shall pay the Company's reasonable additional charges for work done and materials supplied pursuant to Clause 1. above where the need for such work and materials results from the Customer's failure to ensure compliance with any operating instructions, suggestions or recommendations given by the Company or from negligent or wilfully damaging actions of any person, or from the system being required to bear a workload which is in excess of design loading for the site, or from earthquake, fire, flood, storm, lightening, tempest, landslip, or from persons not authorized by the Company interfacing with the present system in any way, or from the Customer's failure to advise of any alarm warning or failure to comply with this agreement.

4. The Company (A Rated Waste Water Services Ltd) cannot be held responsible for:
any defects arising from the installation of the system and it's irrigation fields, either by the manufacturer, installers, drain layers or engineers, etc. Any such defects and subsequent remedies or repairs required, will be the liability of the aforementioned above, or the home owner.

5. The Company will invoice the Customer for any reasonable additional charges for work done and materials supplied and the Customer shall make payment within seven (7 days) of the said invoice. (Late payment will incur penalties of 5%).

6. The maintenance fee is **$212.75** per visit, (including GST) **payable within 7 days** of the work being performed. This fee is the current maintenance charge and is subject to change if an adjustment is required. An invoice and maintenance form will be provided after each visit.

This contract is effective from ***7th July 2022*** and expires on the sale of the above mentioned property unless notice is given by the Customer to the Company of termination of this agreement.
If this agreement is terminated, A Rated Waste Water Services Ltd will be obliged to inform council that an on-going service agreement no longer stands between the parties.

Dated this .....13.....day of .....July.....20..22...
Signed by (Mr / Mrs / Ms / Miss)

.....DAVID KENDALL..... (Customer's Name)

..... (Customer's Signature)

For and on behalf of **A RATED WASTE WATER SERVICES LTD**

A Rated Waste Water Services Ltd

Signed ..... Kevin Carr (Director)

PLEASE RETURN ONE COPY TO A RATED WASTE WATER SERVICES LTD
AND RETAIN A COPY FOR YOUR OWN RECORDS.
THE THIRD COPY OF THIS AGREEMENT SHALL BE GIVEN TO THE COUNCIL BY THE INSTALLER or HOME OWNER
This document is not for distribution and is invalid unless signed by ARated Director

WILEY GEOTECHNICAL

GEOTECHNICAL ENGINEERING SERVICES

22 November 2021

Linda & David Kendall
C/: Lance Vale (CH Northland Ltd)
linda.kendall@xtra.co.nz
lance@coastalhomesnz.com

RE: PS 4 for compaction of fill beneath proposed dwelling – Lot 81, DP 556753, Robert Hastie Drive, Mangawhai. Building Consent BC 210441.

Wiley Geotechnical Limited (WGL) was requested by Lance Vale (CH Northland), acting on behalf of Linda & David Kendall, to visit the site and perform geotechnical site observations, compaction control and certification of engineered fill for a proposed new concrete slab foundation.

WGL visited the site on the 11th of October 2021. The compacted engineered fill (up to 3.0 m of hardfill) within the proposed building area was inspected. Typical measured CBR values of 24 to 30 were achieved in the area of engineered fill as indicated by the Clegg Hammer and was considered appropriate. All works were as per design. Test locations and their respective CBR values are illustrated in the Site Report attached to this letter.

All works are to be in general accordance with NZS4431 Code of Practice for Earthfill for Residential Development.

Conclusions and Recommendations

We consider the site to be suitable for the construction of the proposed dwelling.

The fill that has been placed appears to be in general accordance with NZS4431 “Code of Practice for Earthworks for Residential Development”.

Based on our testing, it is our opinion that a geotechnical ultimate bearing capacity of 300 kPa is available on the prepared engineered pad.

LIMITATIONS

(i) This report has been prepared for the use of our client, Linda & David Kendall and their professional advisers and the relevant Regional Authorities in relation to the specified project brief described in this report. No liability is accepted for the use of any part of the report for any other purpose or by any other person or entity.

(ii) Assessments made in this report are based on the ground conditions indicated from published sources, site inspections and subsurface investigations described in this report based on accepted normal methods of site investigations. Variations in ground conditions may exist between test locations and therefore have not been taken into account in the report. If variations are found during excavation or at foundation preparation stage WGL should be notified immediately so we can amend our recommendations.

(iii) This Limitation should be read in conjunction with the IPENZ/ACENZ Standard Terms of Engagement.

We trust that this information meets your current requirements. Please do not hesitate to contact the undersigned on 021 0399 385 or matt@wileygeotechnical.co.nz if you require any further information.



Matt Wiley, CPEng

Principal Engineer

Attachments:

- PS 4 – Construction Review

- Site Notes

Building Code Clause(s) B1/VM4

PRODUCER STATEMENT – PS4 – CONSTRUCTION REVIEW

ISSUED BY: Wiley Geotechnical Ltd
(Construction Review Firm)

TO: Linda & David Kendall
(Owner/Developer)

TO BE SUPPLIED TO: Kaipara District Council
(Building Consent Authority)

IN RESPECT OF: Compaction of Hard Fill beneath proposed dwelling.
(Description of Building Work)

AT: Lot 81 Robert Hastie Drive
(Address)

Town/City: Mangawhai (Address) **LOT** 81 **DP** 556753 **SO** .....

We Wiley Geotechnical Ltd (Construction Review Firm) have been engaged by Lance at CH Northland Ltd

To provide ☐ CM1 ■ CM2 ☐ CM3 ☐ CM4 ☐ CM5 (Engineering Categories) or ☐ observation as per agreement with owner/developer Linda & David Kendall

or ☐ other ..... (Extent of Engagement) services

in respect of clause(s) B1 & B2 ..... of the Building Code for the building work described in documents relating to Building Consent No. BC 210441 ..... and those relating to Building Consent Amendment(s) Nos. ..... issued during the course of the works. We have sighted these Building Consents and the conditions of attached to them.

Authorised instructions/variations(s) No. ..... (copies attached) or by the attached Schedule ☐ have been issued during the course of the works.

On the basis of ☐ this review ■ these review(s) and information supplied by the contractor during the course of the works and **on behalf of the firm** undertaking this Construction Review, **I believe on reasonable grounds** that ☐ All or ■ Part only of the building works have been completed in accordance with the relevant requirements of the Building Consent and Building Consent Amendments identified above, with respect to Clause(s) B1/VM4 ..... of the Building Code. I also believe on reasonable grounds that the persons who have undertaken this construction review have the necessary competency to do so.

I, Matthew Lewis Wiley (Name of Construction Review Professional) am: ■ CPEng.# 220767

I am a member of: ■ Engineering New Zealand and hold the following qualifications BSc, MSc (Honours) .....

The Construction Review Firm issuing this statement holds a current policy of Professional Indemnity Insurance no less than $200,000*.

The Construction Review Firm is a member of ACE New Zealand: ☐

SIGNED BY Matthew Lewis Wiley (Name of Construction Review Professional) (Signature) M Wiley .....

ON BEHALF OF Wiley Geotechnical Ltd (Construction Review Firm) Date 11 Oct 21

Note: This statement shall only be relied upon by the Building Consent Authority named above. Liability under this statement accrues to the Design Firm only. The total maximum amount of damages payable arising from this statement and all other statements provided to the Building Consent Authority in relation to this building work, whether in contract, tort or otherwise (including negligence), is limited to the sum of $200,000.*

This form is to accompany **Forms 6 or 8 of the Building (Form) Regulations 2004** for the issue of a Code Compliance Certificate.

THIS FORM AND ITS CONDITIONS ARE COPYRIGHT TO ACE NEW ZEALAND AND ENGINEERING NEW ZEALAND

GUIDANCE ON USE OF PRODUCER STATEMENTS

Producer statements were first introduced with the Building Act 1991. The producer statements were developed by a combined task committee consisting of members of the New Zealand Institute of Architects, Institution of Professional engineers New Zealand (now Engineering New Zealand), ACE New Zealand in consultation with the Building Officials Institute of New Zealand. The original suit of producer statements has been revised at the date of this form as a result of enactment of the Building Act (2004) by these organisations to ensure standard use within the industry.

The producer statement system is intended to provide Building Consent Authorities (BCAs) with reasonable grounds for the issue of a Building Consent or a Code Compliance Certificate, without having to duplicate design or construction checking undertaken by others.

PS1 Design Intended for use by a suitably qualified independent design professional in circumstances where the BCA accepts a producer statement for establishing reasonable grounds to issue a Building Consent;

PS2 Design Review Intended for use by a suitably qualified independent design professional where the BCA accepts an independent design professional's review as the basis for establishing reasonable grounds to issue a Building Consent;

PS3 Construction Forms commonly used as a certificate of completion of building work are Schedule 6 of NZS 3910:2013 or Schedules E1/E2 of NZIA's SCC 2011[2]

PS4 Construction Review Intended for use by a suitably qualified independent design professional who undertakes construction monitoring of the building works where the BCA requests a producer statement prior to issuing a Code Compliance Certificate.

This must be accompanied by a statement of completion of building work (Schedule 6).

The following guidelines are provided by ACE New Zealand and Engineering New Zealand to interpret the Producer Statement.

Competence of Design Professional

This statement is made by a Design Firm that has undertaken a contract of services for the services named, and is signed by a person authorised by that firm to verify the processes within the firm and competence of its designers.

A competent design professional will have a professional qualification and proven current competence through registration on a national competence based register, either as a Chartered Professional Engineer (CPEng) or a Registered Architect.

Membership of a professional body, such as Engineering New Zealand (formerly IPENZ), provides additional assurance of the designer's standing within the profession. If the design firm is a member of the ACE New Zealand, this provides additional assurance about the standing of the firm.

Persons or firms meeting these criteria satisfy the term "suitably qualified independent design professional".

*Professional Indemnity Insurance

As part of membership requirements, ACE New Zealand requires all member firms to hold Professional Indemnity Insurance to a minimum level.

The PI Insurance minimum stated on the front of this form reflects standard, small projects. If the parties deem this inappropriate for large projects the minimum may be up to $500,000.

Professional Services during Construction Phase

There are several levels of service which a Design Firm may provide during the construction phase of a project (CM1-CM5 for Engineers[3]). The Building Consent Authority is encouraged to require that the service to be provided by the Design Firm is appropriate for the project concerned.

Requirement to provide Producer Statement PS4

Building Consent Authorities should ensure that the applicant is aware of any requirement for producer statements for the construction phase of building work at the time the building consent is issued as no design professional should be expected to provide a producer statement unless such a requirement forms part of the Design firm's engagement.

Attached Particulars

Attached particulars referred to in this producer statement refer to supplementary information appended to the producer statement.

Refer Also:

1 Conditions of Contract for Building & Civil Engineering Construction NZS 3910: 2013

2 NZIA Standard Conditions of Contract SCC 2011

3 Guideline on the Briefing & Engagement for Consulting Engineering Services (ACE New Zealand/IPENZ 2004)

4 PN Guidelines on Producer Statements

www.acenz.org.nz
www.engineeringnz.org

Engineer's / Inspector's Report

WILEY GEOTECHNICAL

Linda Kendall c/ Lance Coastal Homes

Project Name: Lot 81, Robert Hastie Drive The Sanctuary

Project No.: 21076 Date: 11 - 10 - 21

Time arrived on site: Weather: Fine

Time left site: hrs Contractor's Working Hours:

Travel time: hrs

Total time: 3:30

Final inspection of earthworks & fill for new dwelling. Upto 3.0 m of hard fill

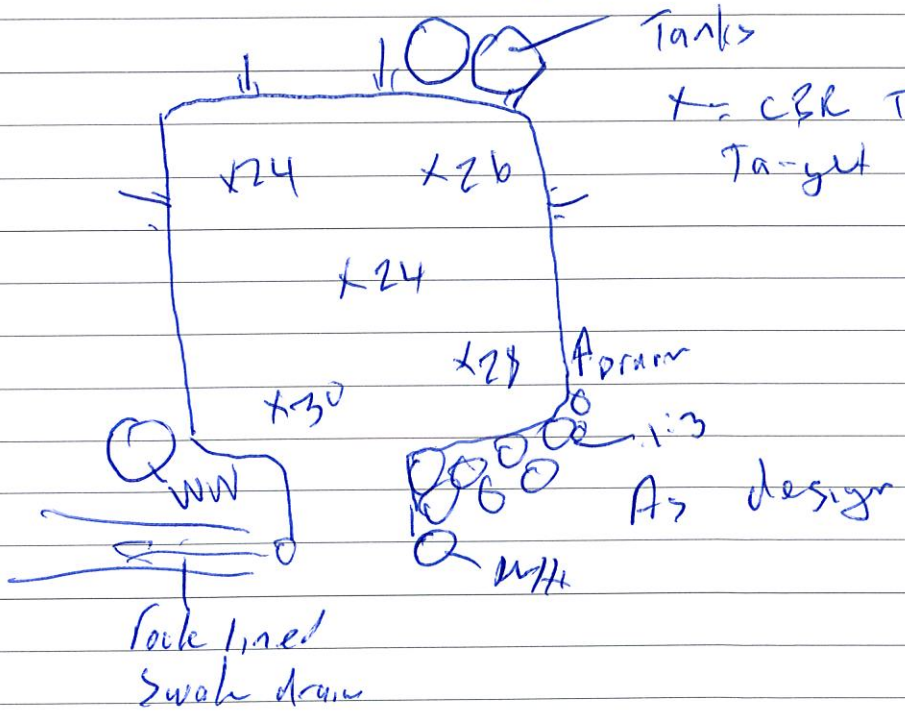

x = CBR Test
Target > 15

As design

All tests > 15; OK for 300 kPa ultimate bearing capacity

OK to place foundation elements (Raft)

Will to issue PS4 for ground bearing

Distribution	Initials

Engineer / Inspector:

Reviewed by:

Form 6A

Memorandum from licensed building practitioner: Record of building work

Section 88, Building Act 2004

Please fill in the form as fully and correctly as possible.
If there is insufficient room on the form for requested details, please continue on another sheet and attach the additional sheet(s) to this form.

THE BUILDING		
Street address:	52 Robert Hastie Drive, Sanctuary	
Suburb:	Mangawhai	
Town/City:	Northland.	Postcode: 0505

THE PROJECT	
Building consent number:	BC 210441.

THE OWNER(S)		
Name(s):	Linda & Dave Kendall	
Mailing address:	(81) 52 Robert Hastie Drive	
Suburb:	Mangawhai	PO Box/Private Bag:
Town/City:	Northland.	Postcode: 0505.
Phone number:	022 054 6523.	Email address: Linda.kendall@xtra.co.nz.

EXTERNAL MOISTURE MANAGEMENT SYSTEMS		
Work that is restricted building work	**Description of restricted building work**	**Carried out or supervised**
Tick ✓	If necessary, describe the restricted building work.	Tick ✓ whether you carried out the restricted building work or supervised someone else carrying out the restricted building work.
Damp proofing ☑	DPC to batten plates.	○ Carried out ○ Supervised
Roof cladding or roof cladding system ☐		○ Carried out ○ Supervised
Ventilation system (for example, subfloor or cavity) ☑	Gaps	○ Carried out ○ Supervised
Wall cladding or wall cladding system ☐		○ Carried out ○ Supervised
Waterproofing ☐		○ Carried out ○ Supervised
Other ☐		○ Carried out ○ Supervised

RECORD OF WORK THAT IS RESTRICTED BUILDING WORK

PRIMARY STRUCTURE

Work that is restricted building work	Description of restricted building work	Carried out or supervised
Tick ✓	If necessary, describe the restricted building work.	Tick ✓ whether you carried out the restricted building work or supervised someone else carrying out the restricted building work.
Foundations and subfloor framing ☐		○ Carried out ○ Supervised
Walls ☑	as per pla.	○ Carried out ✓ Supervised
Roof ☑	as per pla.	○ Carried out ✓ Supervised
Columns and beams ☑	as per pla.	○ Carried out ✓ Supervised
Bracing ☑	as per pla.	✓ Carried out ○ Supervised
Other ☑	Install Joinery as per pla.	○ Carried out ✓ Supervised

ISSUED BY

Name and contact details of the licensed building practitioner who is licensed to carry out or supervise restricted building work.

Name: Lance Vale	LBP number: 116916.
Class(es) licensed in: Carpentry.	
Plumbers, Gasfitters and Drainlayers registration number (if applicable):	
Mailing address (if different from below):	
Street address/Registered office: 52 Estuary Drive	
Suburb: Mangawhai.	Town/City: Mangawhai.
PO Box/Private Bag	Postcode:
Phone number:	Mobile: 021 2224833
After hours:	Fax:
Email address: lance@coastalhomesnz.co.nz	Website:

DECLARATION

I Lance Vale carried out or supervised the restricted building work recorded on this form.

Signature:

Date: 20/05/22.

KAIPARA DISTRICT

Kaipara te Oranganui • Two Oceans Two Harbours

KAIPARA DISTRICT COUNCIL

Producer Statement Construction (PS3) - Plumbing

Issued by: PAUL MASSEY being a Registered Certifying Plumber.

In respect of the testing of water pipework prior to concealment for:

(Owner) MR & MRS D & C RENDALL

At (Address) 53 ROBERT HASTIE DRIVE

MANGAWHAI

Legal Description: Lot 81 DP 556753 Valuation

I have sighted the issued building consent (BC 210441) and have constructed the plumbing pipes and fitting in accordance with the approved building consent, the New Zealand Building Code, and the manufacturers specifications and requirements.

I have tested the water supply system as follows:

(✓) By pressurising the water supply system by subjecting the hot and cold system to a pressure of 1500kPa for a period of not less that 15 minutes and inspecting the system to ensure that there are no leaks, in accordance with NZBC G12/AS1 Clause 7.5.1

(✓) By pressurising the UPVC water piping systems to 1.5 times the working pressure for a period not less than 15 minutes and checking that there are no leaks, as given in section 9 of NZS 7643, in accordance with NZBC G12/AS1 clause 7.5.2

I believe on reasonable grounds that the pipework has passed that test.

I also understand that Kaipara District Council in accepting this producer statement construction (PS3), will be relying on it to establish compliance at the completion of the building work.

Signature of Registered Certifying Plumber: P J Massey

Registration Number: 12780 Reg Expiry Date: 31/3/2022

Date: 20/1/2022

FP:th

File: 3117.03
T-07 Forms PS Plumbing (PS3)
Reviewed 26/09/13

PRODUCT CERTIFICATE

Kronospan OSB Barrier

CERTIFICATE NO: CM70096
Date of issue: 24 March 2021

1 CERTIFICATE HOLDER DETAILS

GlobalBuild.NZ
Interior Installations Limited
PO Box 36-150
Northcote, Auckland 0627
New Zealand

Email: interior.install@xtra.co.nz
Ph: +64 2148 7007
www.globalbuild.nz

GLOBALBUILD.NZ

2 PRODUCT CERTIFICATION BODY

Bureau Veritas Australia Pty Ltd
3/435 Williamstown Road
Port Melbourne VIC 3207
Australia

Ph: 1800 855 190
www.bureauveritas.com.au
Bureau Veritas Australia Pty Ltd

The complaints process for this certificate can be found here:
www.bureauveritas.com.au/your-feedback

KEY INFORMATION

3 SUMMARY OF DESCRIPTION OF BUILDING METHOD OR PRODUCT

Kronospan OSB Barrier is a 9 mm oriented strand board (OSB) panel product. Panels are available in sizes: 2400 x 1200mm, 2700 x 1200 mm, 2440 x 1220 mm and 2740 x 1220 mm. It is available untreated or treated to hazard class H3.1 (LOSP). The treated version is identifiable by green edge colour and identifying stamp.

Continuation of description can be found in item 9. Supporting Information about Description of Building Product or Method.
Matters that should be taken into account in the use or application of the building method or product can be found in item 6. Conditions and Limitations of Use.

4 SUMMARY OF INTENDED USE OF BUILDING METHOD OR PRODUCT

For use as a protected external wall bracing element and as a rigid air barrier in conjunction with a ventilated cavity.

Continuation of intended use can be found in item 8. Supporting Information about Intended use of Building Product or Method.

5 BUILDING CODE PROVISIONS

The performance clauses of the New Zealand Building Code that are relevant to the intended use and with which the building method or product complies or contributes to (where used as part of a system).

B1 Structure: B1.3.1, B1.3.2, B 1.3.3 (a, f, h) B1.3.4
B2 Durability: B2.3.1(a)
E2 External moisture: E2.3.2 (contributes to), E2.3.5 (contributes to), E2.3.7
F2 Hazardous building materials: F2.3.1

How the building method or product complies or contributes can be found in item 12. Basis for Certification. Any qualifications on the extent of that compliance can be found in item 6. Conditions and limitations of use.

This certificate is issued by an independent certification body accredited by JAS-ANZ, the product certification accreditation body appointed by the Chief Executive of the Ministry of Business, Innovation and Employment under the Building Act 2004.
The Ministry does not in any way warrant, guarantee, or represent that the building method or product that is the subject of this certificate conforms with the New Zealand Building Code, nor accept any liability arising out of the use of the building method or product.
The Ministry disclaims to the extent permitted by law, all liability (including negligence) for claims of losses, expenses, damages, and costs arising as a result of the use of the building method(s) or product(s) referred to in this certificate.

This certificate may only be reproduced in its entirety. It is advised to check that this certificate is currently valid and not withdrawn or suspended by referring to the Register of Product Certificates on the Building Performance website http://www.building.govt.nz.

PRODUCT CERTIFICATE

Kronospan OSB Barrier

6 CONDITIONS AND LIMITATIONS OF USE

1. Kronospan OSB Barrier is certified for use in timber framed buildings:
   a) designed in accordance with accordance with NZS3604:2011, or by specific design in accordance with Verification Method B1/VM1, and
   b) up to 10m in height, and
   c) located in wind zones up to and including EXTRA HIGH (as defined in NZS3604:2011) or up to a ULS wind design pressure of 2.6 kPa for buildings specifically designed in accordance with Verification Method B1/VM1, and
   d) located in all exposure zones (as defined in NZS3604:2011), and
   e) located in all seismic zones, and
   f) located greater than 1 m from a relevant boundary.
2. Kronospan OSB Barrier shall be installed in accordance with the GlobalBuild NZ OSB Barrier Design & Install Guide Version 1.3, February 2021
3. Where Kronospan OSB Barrier is installed on the external face of external wall framing the construction shall incorporate a flexible wall underlay and flashing tapes with a drained and ventilated cavity all complying with the requirements of E2/AS1.
4. The flexible underlay shall be installed within 14 days of the Kronospan OSB Barrier being installed (30 days for H3.1 treated Kronospan OSB Barrier).

NOTE: Together, items 3, 4, 5 and 6 define scope of use.

7 HEALTH AND SAFETY INFORMATION

The compliance with any manufacturer's installation instructions, maintenance, OH & S statements, MSDS's and other Health and Safety declarations will provide the necessary Health and Safety Information pertaining to the product.

8 SIGNATURES

Sam Guindi
Product Certification Manager

For and on behalf of
Bureau Veritas Australia Pty Ltd

Brad Smith
Director

For and on behalf of
GlobalBuild.NZ
Interior Installations Limited

This certificate is issued by an independent certification body accredited by JAS-ANZ, the product certification accreditation body appointed by the Chief Executive of the Ministry of Business, Innovation and Employment under the Building Act 2004.
The Ministry does not in any way warrant, guarantee, or represent that the building method or product that is the subject of this certificate conforms with the New Zealand Building Code, nor accept any liability arising out of the use of the building method or product.
The Ministry disclaims to the extent permitted by law, all liability (including negligence) for claims of losses, expenses, damages, and costs arising as a result of the use of the building method(s) or product(s) referred to in this certificate.

This certificate may only be reproduced in its entirety. It is advised to check that this certificate is currently valid and not withdrawn or suspended by referring to the Register of Product Certificates on the Building Performance website http://www.building.govt.nz.

PRODUCT CERTIFICATE

Kronospan OSB Barrier

SCHEDULE: INFORMATION THAT SUPPORTS KEY INFORMATION

9 SUPPORTING INFORMATION ABOUT DESCRIPTION
Further details regarding the description of the product can be found in GlobalBuild NZ OSB Barrier Design & Install Guide Version 1.3, February 2021.
10 SUPPORTING INFORMATION ABOUT INTENDED USE
Further details regarding the use of the product can be found in GlobalBuild NZ OSB Barrier Design & Install Guide Version 1.3, February 2021.
11 SUPPORTING INFORMATION ABOUT CONDITIONS AND LIMITATIONS OF USE
N/A

This certificate is issued by an independent certification body accredited by JAS-ANZ, the product certification accreditation body appointed by the Chief Executive of the Ministry of Business, Innovation and Employment under the Building Act 2004.
The Ministry does not in any way warrant, guarantee, or represent that the building method or product that is the subject of this certificate conforms with the New Zealand Building Code, nor accept any liability arising out of the use of the building method or product.
The Ministry disclaims to the extent permitted by law, all liability (including negligence) for claims of losses, expenses, damages, and costs arising as a result of the use of the building method(s) or product(s) referred to in this certificate.

This certificate may only be reproduced in its entirety. It is advised to check that this certificate is currently valid and not withdrawn or suspended by referring to the Register of Product Certificates on the Building Performance website http://www.building.govt.nz.
CERTIFICATE V1.3

PRODUCT CERTIFICATE

Kronospan OSB Barrier

12 BASIS FOR CERTIFICATION

B1 Structure - By testing and comparison with Acceptable Solution B1/AS1
B2 Durability - By analysis and comparison with Verification Method B2/VM1
E2 External moisture - By analysis and comparison with Acceptable Solution E2/AS1
F2 Hazardous building materials - By testing and comparison with performance requirements of Building Code clause F2.3.1

13 SUPPORTING DOCUMENTATION FOR CERTIFICATION

1. Acceptable Solutions and Verification Methods for New Zealand Building Code Clause B1 Structure 1st Edition (Amendment 19), 28 November 2019
2. Acceptable Solutions and Verification Methods For New Zealand Building Code Clause B2 Durability (Amendment 12), 28 November 2019
3. Acceptable Solutions and Verification Methods For New Zealand Building Code Clause E2 External moisture 3rd edition (Amendment 9), 27 June 2019
4. BBA Agrément Certificate 13/4998 Product Sheet 3, Kronospan OSB/3 for Sheathing, 26 April 2016
5. BBA Agrément Certificate 18/5480 Product Sheet 3, Kronospan OSB/3 for Sheathing, 26 April 2018
6. EPH Test Certificate CT-20-03-25-01 "Formaldehdye Content of Kronospan OSB/3", 25 March 2020
7. IVS Test Report 50198 "Test for retention of H3.1 LOSP treated OSB", 20 March 2020
8. Scion Test Report "P21:2010 9mm Kronspan OSB 600 Wall with Brackets", 24 October 2019
9. Scion Test Report "P21:2010 9mm Kronspan OSB 1200 Wall with Brackets", 24 October 2019
10. Scion Test Report "P21:2010 9mm Kronspan OSB 400 Wall with Brackets", 28 February 2020
11. Scion Test Report "P21:2010 9mm Kronspan OSB 10mm GIB standard 400 Wall with Brackets", 28 February 2020
12. Scion Test Report "P21:2010 9mm Kronspan OSB 10mm GIB standard 600 Wall with Brackets", 28 February 2020
13. Scion Test Report "P21:2010 9mm Kronspan OSB 10mm GIB standard 1200 Wall with Brackets", 28 February 2020
14. DOP 1393-CPR-0522 Kronospan OSB/3 according to EN300, 28 January 2019
15. GlobalBuild NZ OSB Barrier Design & Install Guide Version 1.3, February 2021

This certificate is issued by an independent certification body accredited by JAS-ANZ, the product certification accreditation body appointed by the Chief Executive of the Ministry of Business, Innovation and Employment under the Building Act 2004.
The Ministry does not in any way warrant, guarantee, or represent that the building method or product that is the subject of this certificate conforms with the New Zealand Building Code, nor accept any liability arising out of the use of the building method or product.
The Ministry disclaims to the extent permitted by law, all liability (including negligence) for claims of losses, expenses, damages, and costs arising as a result of the use of the building method(s) or product(s) referred to in this certificate.

This certificate may only be reproduced in its entirety. It is advised to check that this certificate is currently valid and not withdrawn or suspended by referring to the Register of Product Certificates on the Building Performance website http://www.building.govt.nz.
CERTIFICATE V1.3

PRODUCT CERTIFICATE

Kronospan OSB Barrier

14 CONDITIONS RELATING TO NOTIFICATION

(a) the certificate holder notifies the product certification body (Bureau Veritas) in writing of any intended change to any of the following particulars:
(i) the name, address, or contact details of the certificate holder:
(ii) any address of a location where a certified product is produced or manufactured:

(b) the certificate holder notifies the product certification body (Bureau Veritas) in writing of any intended change, modification, or alteration to any of the following:
(i) the certified building method or product:
(ii) the method of its production or manufacture:
(iii) the product quality plan prepared in respect of the certified building method or product:
(iv) the application or installation instructions for the certified building method or product:
(v) any documentation relating to the use and maintenance of the certified building method or product:

(c) if the certificate holder has any reason to suspect that the certified building method or product does not comply with the Building Code, the certificate holder notifies the product certification body (Bureau Veritas) in writing of the reason for that suspicion:

(d) if the certificate holder or the product certification body (Bureau Veritas) finds that a certified building method or product that has been released on the market does not comply with the Building Code, the certificate holder discloses that fact in disclosure statements published in a form that is acceptable to the product certification body and to the chief executive:

(e) if the certificate is suspended or revoked, the certificate holder—
(i) notifies all customers to whom the building method or product is regularly supplied; and
(ii) immediately ceases using the certificate, the mark of conformity, and any reference to the number of the certificate.

This certificate is issued by an independent certification body accredited by JAS-ANZ, the product certification accreditation body appointed by the Chief Executive of the Ministry of Business, Innovation and Employment under the Building Act 2004.
The Ministry does not in any way warrant, guarantee, or represent that the building method or product that is the subject of this certificate conforms with the New Zealand Building Code, nor accept any liability arising out of the use of the building method or product.
The Ministry disclaims to the extent permitted by law, all liability (including negligence) for claims of losses, expenses, damages, and costs arising as a result of the use of the building method(s) or product(s) referred to in this certificate.

This certificate may only be reproduced in its entirety. It is advised to check that this certificate is currently valid and not withdrawn or suspended by referring to the Register of Product Certificates on the Building Performance website http://www.building.govt.nz.

PART C: As Built Services Plan
(To be completed in all cases. If details are already noted on separate drawings then provide copies in duplicate as appropriate and attach to this sheet. Ensure that drawing numbers, etc, are noted below.)

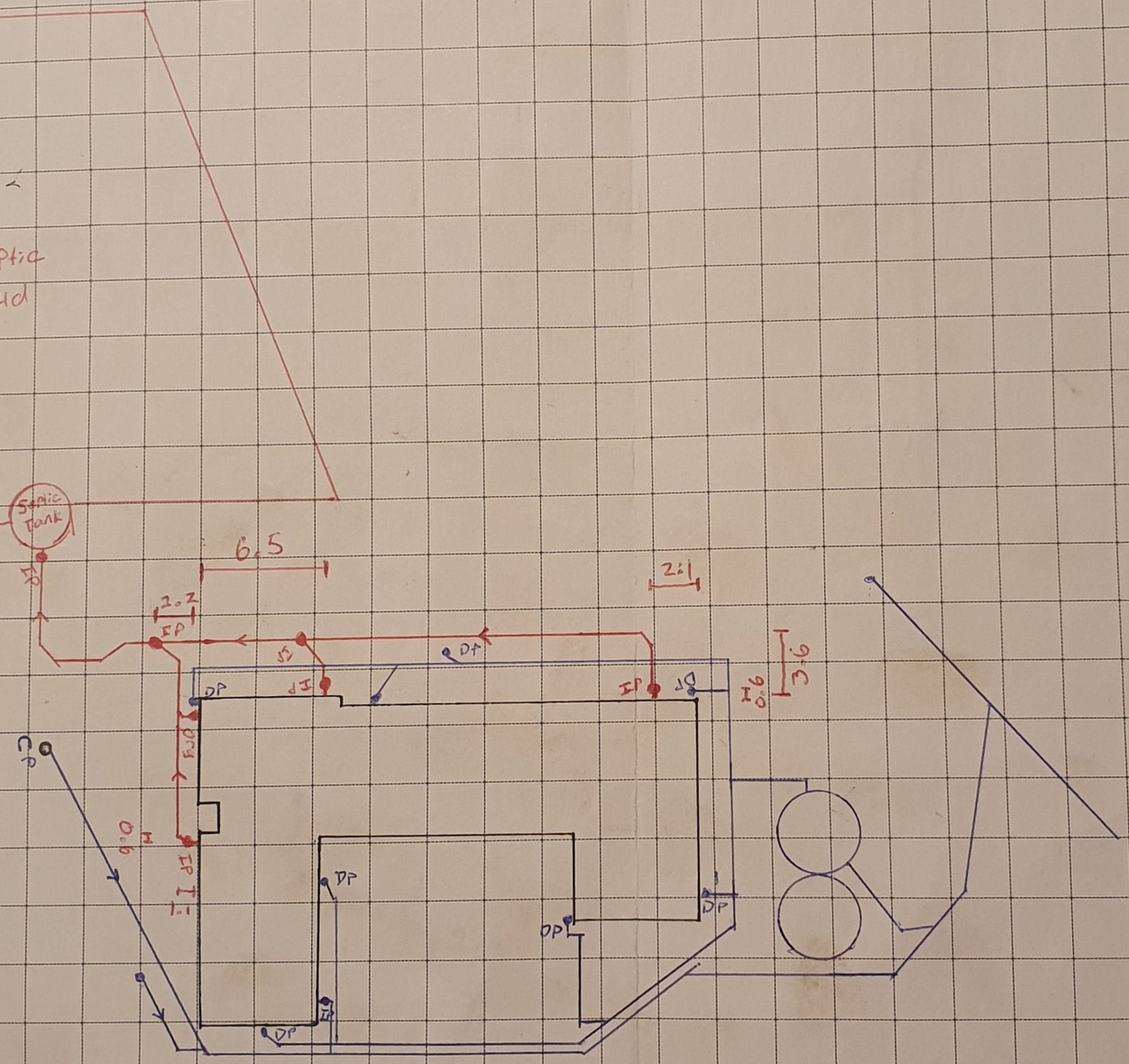

Scale: 1 in 300

Site Address: ~~53~~ 53 Robert Hastie Dr
Mangawhai

BC#210441

Please provide at least two measurements for each access point for future location

KAIPARA DISTRICT

Kaipara te Oranganui • Two Oceans Two Harbours

KAIPARA DISTRICT COUNCIL

Producer Statement Construction (PS3)

Construction

ISSUED BUILDING CONSENT NUMBER BC210441

THIS PS3 IS ISSUED BY: Freedom Pools and Spa 2006 Limited

TO: **KAIPARA DISTRICT COUNCIL**

IN RESPECT OF: Private Fibreglass Swimming Pool. Also includes necessary plumbing to gulley trap or soak pit.

AT (Address): 53 Robert Hastie Drive, Mangawhai 0573

LEGAL DESCRIPTION - LOT 81 DP 556753 SO

FROM: Glenn Handley (Installer),

LICENSED BY Reg./License No: N/A

engaged by Linda & David Kendall (Owner/Builder)

In respect of clause(s) B1 and B2 of the Building Regulations 1992 for the building work described by the drawings and specifications prepared by the design firm titled;

numbered

authorised variation(s) (copies attached)

have been issued during the course of the works.

I have sighted the issued building consent and read the conditions. As the contractor/builder I can confirm that the building works have been carried out in accordance with the requirements of the New Zealand Building Code, the conditions of the building consent, the design drawings and specifications and in accordance with the listed variations (if any).

I understand that if this producer statement is accepted, that it may be used to verify that the building work All / Part only as specified in the attached particulars, the subject of this building consent meets, based on reasonable grounds, the requirements of this building consent and the requirements of the Building Code in respect to clauses B1, B2, ……of the Building Regulations 1992.

☑ I understand and accept that Council may rely on this document, for the purposes of establishing compliance with the above building consent and that the content including the signature, whether electronic or not, is truly representative and authoritative of the information contained.

Name: Glenn Handley Signature: Glenn Handley Digitally signed by Glenn Handley Date: 2022.02.28 12:03:07 +13'00' Date: 28/02/2022

Address: 1/14 Agency Lane, Silverdale

Contractor/Applicator: Freedom Pools and Spa 2006 Limited

Telephone: 0272830141 (bus) 094267371 (home) Fax N/A

File: 3117.03

Producer statement construction (PS3)
General construction work

All sections of this form must be completed

TO BE COMPLETED BY THE PERSON WHO HAS UNDERTAKEN THE BUILDING WORK

Author name:	Ryan O'Connor	Building consent No:	
Author company:	Warner Fencing	Author Registration No:	
Description of building work:	Warner Glass Pool Fencing & Clutha Pool Fencing		
Performance standard for maintenance and inspection, if applicable	☐ N/A		
Legal description:	Pool Fencing		
Site address:	53 Robert Hastie Drive, Mangawhai		

NZBC clauses: (select as applicable)

B1 ✔	B2 ✔	C1	C2	C3	C4	C5	C6	D1	D2	E1	E2	E3
F1	F2	F3	F4	F5	F6	F7	F8	G1	G2	G3	G4	G5
G6	G7	G8	G9	G10	G11	G12	G13	G14	G15	H1		

I have sighted the above building consent and read the attached conditions of consent and confirm that I have undertaken the building work described above in accordance with the consented plans and specifications.

I understand that Council will rely upon this producer statement, for the purposes of establishing compliance with the above building consent.

Signature:  Date: 20/5/2022

Tradesperson's contact details:

Address:	15 Taylors Road, Morningside Postcode: 1025		
Business:	Warner Fencing	Fax:	
Mobile:	0275183930	Email	ryan@warnerfencing.co.nz

COUNCIL USE ONLY

☐ Central ☐ Henderson ☐ Manukau ☐ Orewa ☐ Papakura ☐ Pukekohe ☐ Takapuna

☐ Accepted in support of inspection ☐ Accepted instead of inspection

Register checked: Council ☐ LBP ☐ N/A ☐

Name: Date:

Producer statement accepted as establishing compliance with the consented plans: YES ☐ NO ☐

Producer statements are accepted solely at Auckland Council's discretion; please refer to the Producer Statement Policy which can be found on Councils website for further details

http://www.aucklandcouncil.govt.nz/EN/ratesbuildingproperty/consents/Consent%20documents/ac2301producerstatementpolicy.pdf

Memorandum from Licensed Building Practitioner

Record of Building Work

Section 88, Building Act 2004

GERARD CERTIFIED ROOFER

BC 210441

The Building Bruce and Linda Kendall

Street Address: 81 The Sanctuary		
Suburb:	Town/City: Mangawhai	Postcode: 0573

External Moisture Management System

Work that is restricted building work	Description of restricted building work	Carried out or supervised?
☑ Roof cladding or roof cladding system	Installation of Gerard Roofs pressed steel tiles and accessories per manufacturer's specification.	☐ Carried out ☑ Supervised

Issued By

Name and contact details of the licensed building practitioner who is licensed to carry out or supervise restricted building work

Name: Lucas Hardwick		LBP Number: BP 131196
Class(es) licensed in: Roofing R2 R3		
Address: Po Box 4282		Phone: 027 478 4459
Suburb: Kamo		Fax:
Town/City: Whangarei	Postcode: 0141	Mobile:
Mailing Address: ☐ Same as above?		After Hours Phone:
Suburb:		
Town/City:	Post Code:	
Email Address: johnduffroofing@gmail.com		
Website:		

Declaration

I carried out or supervised the restricted work recorded on this form.

Name	Signature	Date
Lucas Hardwick	Lucas Hardwick	22/12/2021

KAIPARA DISTRICT

Kaipara te Oranganui • Two Oceans Two Harbours

KAIPARA DISTRICT COUNCIL

Producer Statement Construction (PS3)

Construction

ISSUED BUILDING CONSENT NUMBER BC 210441

THIS PS3 IS ISSUED BY: John Duff Roofing

TO: **KAIPARA DISTRICT COUNCIL**

IN RESPECT OF: Bruce and Linda Kendall

AT (Address): 81 The Sanctuary Mangawhai

LEGAL DESCRIPTION - LOT .....DP .....SO .....

FROM: Luke Hardwick (Installer),

LICENSED BY John Duff Roofing Reg./License No: BP 131196

engaged by.....(Owner/Builder)

In respect of clause(s) B1 and B2 of the Building Regulations 1992 for the building work described by the drawings and specifications prepared by the design firm titled;

Battens fixed as per consented plans

.....

numbered.....

.....

authorised variation(s).....(copies attached)

have been issued during the course of the works.

I have sighted the issued building consent and read the conditions. As the contractor/builder I can confirm that the building works have been carried out in accordance with the requirements of the New Zealand Building Code, the conditions of the building consent, the design drawings and specifications and in accordance with the listed variations (if any).

I understand that if this producer statement is accepted, that it may be used to verify that the building work All / Part only as specified in the attached particulars, the subject of this building consent meets, based on reasonable grounds, the requirements of this building consent and the requirements of the Building Code in respect to clauses B1, B2, ...of the Building Regulations 1992.

☑ I understand and accept that Council may rely on this document, for the purposes of establishing compliance with the above building consent and that the content including the signature, whether electronic or not, is truly representative and authoritative of the information contained.

Name: Luke Hardwick Signature [signature] Date: 22/12/2021

Address: PO Box 4282 Kamo

Contractor/Applicator: John Duff Roofing

Telephone: .....(bus) 027 478 4459 (home) Fax .....

File: 3117.03

P & P CONSULTING ENGINEERS LTD

Civil and Structural Engineering

Mr P. Prakash (Director)
B.E. (Civil), CPEng, MIPENZ
Mr J. Dela Cruz
B.E. (Civil), GIPENZ
Mr M. Ormeno
B.E. (Civil), Ph.D., GIPENZ
Dr. H.D.W. FENDALL (Consultant)
B.E. (Civil) Hons., Ph.D., CPEng, MIPENZ

6A Montel Avenue,
Henderson,
AUCKLAND, 0612
Ph. & Fax 09-836-1853
parmil@pnpltd.co.nz
joel@pnpltd.co.nz
miguel@pnpltd.co.nz

Ref: 12/170/ds2
02/09/2021

WARNER FENCING & GATES LTD

ALUMINIUM SWIMMING POOL FENCE

DESIGN CALCULATIONS SUMMARY

INDEX **PAGE**

1. **Producer Statement - Design** 1

2. **General** 2

3. **Design of Aluminium Fence** 3

3.1 **Vertical Rails** 3

Use 6063-T6 Ø16 mm x 1.2 mm thick Aluminium Vertical Rails @ 90 mm max centres, 1.2 m max span.

3.2 **Top Rails** 5

Use 6063-T6 25 mm deep x 38 mm wide x 1.5 mm thick Aluminium Top Rails with max clear span of 2450 mm.

3.3. **Posts** 6

Use 6063-T6 50 mm deep x 50 mm wide x 2.0 mm thick Aluminium posts at max spacing of 2.5 m.

3.4. **Footing** 6

Use 250 mm Diameter x 900 mm min deep concrete footing.

Min concrete strength to be 20 MPa or 25 MPa if within sea spray zone.

Assumed Undrained Shear Strength is 50 kPa.

3.5 With Base Plate Option 8

Use 6063-T6 135 mm x 100 mm x 10 mm thick Aluminium Base Plate.

Use 4 / M10 Chemset Anchor Studs Grade A4/316 SS with Epcon C6 Series. Drilled hole depth to be 80 mm minimum into concrete. Other requirements are as follows:

Minimum Substrate (Concrete) Thickness = 100 mm
Minimum Concrete Edge Distance = 50 mm.
Minimum Spacing = 60 mm

3.6 With coach screws option 10

Use 4 / M10 coach screws. 150 mm minimum penetration

Refer to Drawing S01 – S04 for reference.

Notes:

1. Any parts of the structure which are not covered by the specific design included with these calculations must comply either with the New Zealand Building Code or specific design as detailed by others. Any exceptions to this should be referred back to this Design Office.

2. The above calculations include structural work for which a Building Consent must be obtained prior to building. It is the Owner's responsibility to obtain all necessary consents.

3. This design assumes that all the specified members are suitably protected from excess moisture in accordance with Section E1, E2 and E3 of the Building Code. All timber, steelwork, bolts and fasteners to be corrosion protected in accordance with the requirements of NZS 3604:2011 Chapter 4, Durability.

4. All aluminium surfaces shall be painted where the structures are to be exposed to extremely corrosive conditions and where the aluminium alloy parts are in contact with, or are fastened to, steel members or other dissimilar materials.

5. Painting procedure must be in accordance with AS/NZS 1664.

6. All welding shall be done in accordance with AS1665.

Building Code Clause(s) B1

PRODUCER STATEMENT – PS1 – DESIGN

(Guidance on use of Producer Statements (formerly page 2) is available at www.engineeringnz.org)

ISSUED BY: P & P CONSULTING ENGINEERS LTD
(Design Firm)

TO: HARCO (HARKNESS & YOUNG LTD)
(Owner/Developer)

TO BE SUPPLIED TO: VARIOUS COUNCILS
(Building Consent Authority)

IN RESPECT OF: ALUMINIUM SWIMMING POOL FENCE
(Description of Building Work)

AT: VARIOUS SITES
(Address)

Town/City:..... **LOT**..... **DP**..... **SO**.....
(Address)

We have been engaged by the owner/developer referred to above to provide:

STRUCTURAL DESIGN OF ALUMINIUM SWIMMING POOL FENCES

(Extent of Engagement)

services in respect of the requirements of Clause(s) B1 of the Building Code for:

☐ All or ■ Part only (as specified in the attachment to this statement), of the proposed building work.

The design carried out by us has been prepared in accordance with:

■ Compliance Documents issued by the Ministry of Business, Innovation & Employment B1/VM1,VM4 or
(verification method/acceptable solution)

☐ Alternative solution as per the attached schedule

The proposed building work covered by this producer statement is described on the drawings titled:

HARCO - ALUMINIUM SWIMMING POOL FENCES and numbered 12/170/DS2, S01-S04;
together with the specification, and other documents set out in the schedule attached to this statement.

On behalf of the Design Firm, and subject to:
(i) Site verification of the following design assumptions REFER NOTES AT END OF DESIGN CALCULATIONS
(ii) All proprietary products meeting their performance specification requirements;

I believe on reasonable grounds that a) the building, if constructed in accordance with the drawings, specifications, and other documents provided or listed in the attached schedule, will comply with the relevant provisions of the Building Code and that b), the persons who have undertaken the design have the necessary competency to do so. I also recommend the following level of construction monitoring/observation:

☐ CM1 ☐ CM2 ☐ CM3 ☐ CM4 ☐ CM5 (Engineering Categories) or ☐ as per agreement with owner/developer (Architectural)

I, PARMIL PRAKASH am: ■ CPEng 251801 # ☐ Reg Arch ..... #
(Name of Design Professional)

I am a member of: ■ Engineering New Zealand ☐ NZIA and hold the following qualifications: BE (Civil), CPEng
The Design Firm issuing this statement holds a current policy of Professional Indemnity Insurance no less than $200,000*.
The Design Firm is a member of ACENZ: ☐

SIGNED BY PARMIL PRAKASH (Signature)
(Name of Design Professional)

ON BEHALF OF P & P CONSULTING ENGINEERS LTD Date 02/09/2021
(Design Firm)

Note: This statement shall only be relied upon by the Building Consent Authority named above. Liability under this statement accrues to the Design Firm only. The total maximum amount of damages payable arising from this statement and all other statements provided to the Building Consent Authority in relation to this building work, whether in contract, tort or otherwise (including negligence), is limited to the sum of $200,000.*

This form is to accompany **Form 2 of the Building (Forms) Regulations 2004** for the application of a Building Consent.

THIS FORM AND ITS CONDITIONS ARE COPYRIGHT TO ACENZ, ENGINEERING NEW ZEALAND AND NZIA

P & P CONSULTING ENGINEERS LTD

Civil and Structural Engineering

Mr P. Prakash (Director)
B.E. (Civil), CPEng, MIPENZ
Mr J. Dela Cruz
B.E. (Civil), GIPENZ
Mr H. Yin
B.E. (Civil), GIPENZ
Dr. H.D.W. FENDALL (Consultant)
B.E. (Civil) Hons., Ph.D., CPEng, MIPENZ

6A Montel Avenue,
Henderson, AUCKLAND,
0612
Ph. & Fax 09-836-1853
parmil@pnpltd.co.nz
joel@pnpltd.co.nz
hansen@pnpltd.co.nz

02/09/2021

Ref: 12/170

TO WHOM IT MAY CONCERN

Dear Sir/Madam,

B2 COMPLIANCE

Producer Statement for Design-PS1 for Clause B2 of the Building Code – Structural Durability.

We are not able to provide this because there is no effective verification method for B2 contained within the Building Code.

However we can confirm that for the structural elements shown on our documentation:

Timber
Timber treatment has been selected in accordance with Table 1A of B2/AS1.

Concrete
Concrete cover have been selected in accordance with NZS3101:2006, Part 1 Section 3.

Mild Steel
Steel protection has been specified in accordance with the “Guide to the protection of structural steel against atmospheric corrosion by the use of protective coatings” AS/NZS3212. We Note that this is on a time to first maintenance basis.

We trust this provides the information that you are seeking.

Yours faithfully,

Mr P Prakash
Director
P & P Consulting Engineers Limited

2. GENERAL

The following will be used for the design of proposed pool fence

Use	AS / NZS 1170:2002	Loadings Code
	NZS 8500:2006	Safety Barriers and Fences Around Swimmng Pool
	NZS 3404:1997	Structural Steel
	NZS 3101:2006	Concrete

LOADS

Live Loads — Consider 0.25 kN point load to all structural components

Wind Loads — Consider Very High Wind Zone

Vu = 50 m/s

q = 1.50 kPa (ULS)

P & P CONSULTING ENGINEERS LTD Civil and Structural Engineering 6A Montel Avenue, Henderson ph: 836-1853	Project: Harco/ Alum Swimming Pool Fences	Job No. 12/170	Sheet 3 of
	Designed: PP/JD		Date: Aug 2012

3. DESIGN of ALUMINIUM FENCE

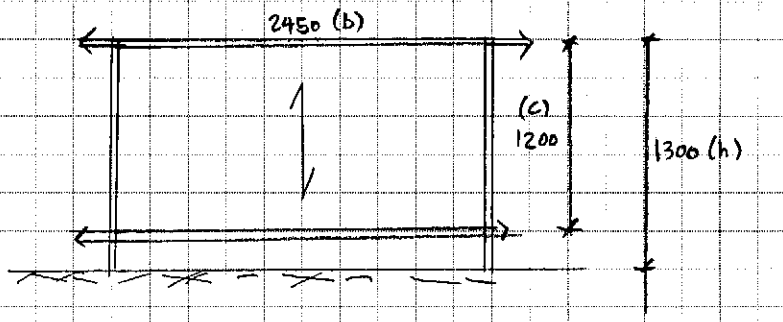

c/h = 0.92
b/c = 2 (1 panel)
= 5 (> 1 panel)

Wind Load : Very High
q_u = 1.5 kPa

Consider wind on individual members : Cd = 1.2 for circular & square sections

3.1 VERTICAL RAILS

Spacing = 90 mm max. crs

Span = 1200 − 25×2 = 1150 mm

LOADING		MOMENT, M^*
1.5Q	1.5 × 0.5 kPa = 0.75 kPa	$M^* = (0.75)(0.09)(1.2)^2/8 = 0.012$ kNm
	1.5 × 0.25 kN × 50% = 0.1875 kN	$M^* = (0.1875)(1.2)/8 = \underline{0.027 \text{ kNm}}$ ← governs
Wu	1.5 kPa × 1.2 × 0.16 = 0.029 kN/m	$M^* = (0.029)(1.2)^2/8 = 0.005$ kNm

↑ (V_{max} = 50 m/s)
→ Very High Wind

Say both ends fixed

Provided Section : ϕ16 × 1.2 mm (6063-T5) Aluminium

Elastic Section Modulus, $Z = \dfrac{\pi[(16)^4 - (13.6)^4]}{32(16)} = 192.21 \text{ mm}^3$

Plastic Section modulus, $S = \dfrac{d^3 - d_i^3}{6} = 263.42 \text{ mm}^3$



d_i = 16 − 2×1.2 mm
= 13.6 mm

P & P CONSULTING ENGINEERS LTD Civil and Structural Engineering 6A Montel Avenue, Henderson ph: 836-1853	Project: Harco/ Alum Swimming Pool Fences	Job No. 12/170	Sheet 4 of
	Designed: PP/JD		Date: Aug 2012

USING 6063 - T5

As per AS/NZS 1664 : 1997 Sect. 3.4.4 (Tension - Round Tubes)

$\phi F_L = 1.17\, \phi_y F_{ty} = (1.17)(0.95)(110) = 122.3$ MPa ← governs

$\phi F_L = 1.24\, \phi_u F_{tu}/k_t = (1.24)(0.85)(152)/1.0 = 160.2$ MPa

Using 6063 -T5 Material

$F_{ty} = 110$ MPa

$F_{tu} = 152$ MPa

$k_t = 1.0$

MOMENT CAPACITY OF THE SECTION PROVIDED

$f_b = \phi M / Z \text{ or } S$; $\phi M = (\phi F_L)(Z \text{ or } S)$

ϕM_Z (elastic) = 0.0235 kNm < M* NOT ok'

ϕM_S (plastic) = 0.0322 kNm

USING 6063 -T6

$F_{ty} = 172$ MPa

$F_{tu} = 207$ MPa

$k_t = 1.0$

$\phi F_L = (1.17)(0.95)(172) = 191.2$ MPa ← governs

$= (1.24)(0.85)(207)/1 = 218.2$ MPa

MOMENT CAPACITY : $\phi M = (\phi F_L)(Z \text{ or } S)$

ϕM_Z (elastic) = 0.0367 kNm > M*

ϕM_S (plastic) = 0.0504 kNm > M*

Use 6063 - T6 ϕ16mm x 1.2mm thick Aluminium Vertical Rails

@ 90mm max. crs. (1.2m max. span)

P & P CONSULTING ENGINEERS LTD
Civil and Structural Engineering
6A Montel Avenue, Henderson ph: 836-1853

Project | Job No. | Sheet 5 of

Designed: Mr P. Prakash | Date

3.2 TOP RAILS

Section = 25 x 38 x 1.5mm

Span = 2.5m

Z = 1473.8 mm^3

S = 1702.5 mm^3

Loads :

Wind Load from Infill : $1.5\ kPa \times 1.2 \times 0.016 \times \frac{1.2}{2} = 0.017$ kN/rail

kN/m = $0.017 / 0.1 = 0.17$ kN/m

on rail = $1.5 \times 1.2 \times 0.025 = 0.045$ kN/m

Total = 0.215 kN/m

BM = $\frac{1}{8} \times 0.215 \times 2.5^2 = 0.17$ kNm

Live load : Consider 0.25 kN @ mid span

BM = $0.25 \times 1.5 \times \frac{2.5}{4} = 0.23$ kNm

Using 6063 - T6

$\phi F_L = 0.95 \times 172 = 163\ MPa$ ←

$= 0.85 \times \frac{201}{1} = 175\ MPa$

moment capacity : $\phi M = \phi F_L (Z \text{ or } S)$

$\phi M_Z = 0.24$ kNm ✓ OK

$\phi M_S = 0.28$ kNm ✓ OK

→ Use 6063-T6 25mm deep x 38mm wide x 1.5mm thick Top Rails

P & P CONSULTING ENGINEERS LTD
Civil and Structural Engineering
6A Montel Avenue, Henderson ph: 836-1853

Project | Job No. | Sheet 6 of

Designed: Mr P. Prakash | Date

3.3 Posts

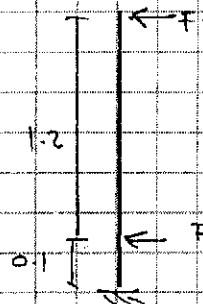

Section = 50×50×2 SHS

Spacing = 2.5m

Z = 5393 mm³

S = 6399.8 mm²

F = 0.215 × 2.5 = 0.54 kN (wind)

Φ = 0.25 × 1.5 = 0.38 kN

Bm = (0.54 × 0.1) + (0.54 × 1.3) = 0.76 kNm

Using 6063-T6

ϕF_L = 163 MPa, ϕM = (ΦFL)(Z or S)

ϕM_z = 0.881 kNm ✓ OK

ϕM_3 = 1.05 kNm ✓ OK

→ Use 6063-T6 50 × 50 × 2 SHS Aluminium post at 2.5 m centres.

3.4 Footing

Mo base = 0.76 kNm

Ve base = 1.1 kN

eff. load ht = M/V = 0.69 m

Refer PGC 7

→ Use 250 mm ϕ × 900 mm deep concrete footing

Assumed S_u = 50 kPa

Concrete strength = 20 MPa (25 MPa within sea spray zone)

(7)

LATERALLY LOADED POLES - Ultimate Limit State Design

CLIENT: HARCO

REF: 12/170
DATE: 26-Jun-16

POLE AND FOOTING DETAILS

Pole / Load Height =	**0.70**	metres
Lateral Load	**1.1**	kN (ULS)
Footing Diameter =	**0.25**	metres
Min Pole Spacing =	**2.5**	metres
Req'd Footing Depth	0.79	metres
No Resistance Depth (fo)	**0.25**	metres

SOIL PROPERTIES:

Undrained Shear Strength (Su)	=	**50 kPa**
Soil Strength Reduction Factor	=	**0.5**

FOOTINGS (Using "Broms and Beyond" by Pender)

Spacing Factor (B1/VM4) = 1.000

Required Footing Depth = Pender + Dia = 0.54 + 0.25

= 0.79 metres

P & P CONSULTING ENGINEERS LTD Civil and Structural Engineering 6A Montel Avenue, Henderson ph: 836-1853	Project: Harco/ Alum Swimming Pool Fences	Job No. 12/170	Sheet 8 of
	Designed: PP/JD		Date: Sep 2012

3.5 WITH BASE PLATE OPTION

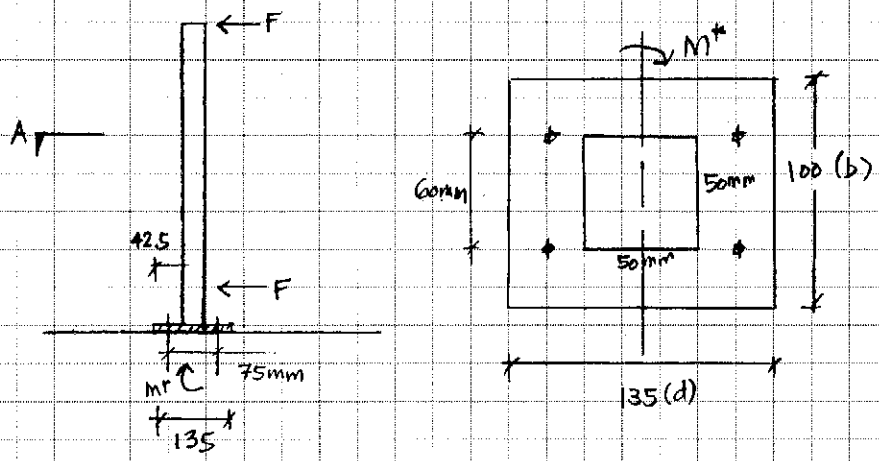

SIDE ELEVATION PLAN 'A'

→ BASE PLATE

Provided Section : 135 x 100mm Base Plate

$M^*_{@\ BASE}$ = 0.276 kNm $\quad N^* = 1.2(0.5kPa)(1.2)(2.5) = 1.8kN$

$V^*_{@\ BASE}$ = 1.1 kN

$f_{BASE} = \frac{P}{A} \pm \frac{6M}{BD^2} = 0.133\ MPa \pm 2.5 = 2.6MPa, -2.5MPa$

Allo BP (concrete) = $0.85f'c$ = 17.5MPa
Support = 15MPa

$M^*_{plate} = (2.6MPa)(100)(42.5)^2/2 = 234812\ N\text{-}mm$

USING 6063 – T6

As per NZS1664 : 1997 Sect 3.45 (Tension – plates)

$\phi FL = 1.3\,\phi_y F_{ty} = 1.3(0.95)(172) = 212.42\ MPa$ ←

$= 1.42\,\phi_u F_{tu}/k_t = 1.42(0.85)(207)/1 = 250\ MPa$

$\phi FL = \phi M/Z$, $\quad Z\ (elastic) = \frac{bt^2}{6}$

$(212.42\ MPa) = (234812)/\left(\frac{100\,t^2}{6}\right)$

Min. thickness = 8.1 mm ~ say 10mm

Use 6063 – T6 135mm x 100mm x 10mm thick Aluminium Base Plate

P & P CONSULTING ENGINEERS LTD
Civil and Structural Engineering
6A Montel Avenue, Henderson ph: 836-1853

Project: Harco/ Alum Swimming Pool Fences	Job No. 12/170	Sheet 9 of
Designed: PP/JD		Date: Sep 2012

⇒ ANCHORS INTO CONCRETE

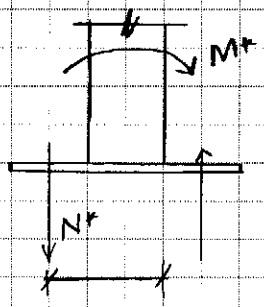

$M^* = 0.76$ kNm

$V^* = 1.1$ kN

X, lever arm = 62.5mm

$N^* = M^*/x = 12.2$ kN

$N^*/_{BOLT} = 12.2\text{kN}/2 = 6.1$ kN

$V^*/_{BOLT} = 1.101\text{kN}/4 = 0.3$ kN

USING M10 Chemset Anchor Stud (EPCON C6 SERIES)

$\phi N_{ur} = (49.3\text{kN})(0.87)(1)(1)(0.9)(0.5a)$
$= 9.9\text{kN/BOLT} \quad > N^*$ ok!

$\phi V_{ur} = (5.1\text{kN})(0.79)(1)(0.74)(0.82)(0.71)$
$= 1.74\text{kN/BOLT} \quad > V^*$ ok!

RATIO = 0.9 < 1.2 ok!

Eff. depth, h= 80mm
F'c = 20 MPa
Edge Distance = 50mm min
Spacing = 60mm min

Use 4/M10 Chemset Anchor Studs Grade A4/316 SS with Epcon C6 Series. Drilled hole depth to be 80mm min into Concrete. Other requirements are as follows:

Min. Substrate (Concrete) thickness = 100 mm
Min. Concrete Edge Distance = 50mm
Min. Spacing = 60mm

NOTE: FIXING OF POSTS TO BASE PLATES BY OTHERS. IF WELDED THE CAPACITY OF THE POSTS WILL BE REDUCED AND NEEDS TO BE REDESIGNED.

P & P CONSULTING ENGINEERS LTD
Civil and Structural Engineering
6A Montel Avenue, Henderson ph: 836-1853

Project | Job No. | Sheet 10 of

Designed: Mr M. Ormeno | Date

3.6 Alternatively Using Coach Screws

$N_u = 6.3\ kN$, $V_u = 0.3\ kN$

Using M10 coach screws

$$\phi N_n = \phi \times n \times k \times p \times Q_k$$

where $\phi = 0.7$
$n = 1$, number of screws
$k = 0.7$, timber group J5
$= 0.8$, medium duration
$p = 150\ mm$
$Q_K = 107\ N/mm$, NZS 3603 / Table 4.16

$\Rightarrow \phi N_n = 6.3\ kN > N_u$, hence OK

Shear Verification

$$\phi V_n = \phi \times n \times k_1 \times k_{12} \times k_{13} \times k \times Q_{sk}$$

where $\phi = 0.7$
$n = 1$
$k = 1$
$k_1 = 0.8$, medium duration
$k_{12} = 0.7$
$k_{13} = 1.0$
$Q_{sk} = 2.26\ kN$

$\Rightarrow \phi V_n = 0.9\ kN > V_u$, hence ok

$\therefore$ Use 4/M10 coach screws. 150 mm minimum penetration

P & P CONSULTING ENGINEERS LTD Civil and Structural Engineering 6A Montel Avenue, Henderson ph: 836-1853	Project.	Job No.	Sheet 11 of
	Designed: Mr M. Ormeno		Date

4. Boundary Joist to Joist/Nog Connection

Using 190 x 45 SG8 joists or nogs at 450 mm crs

→ D

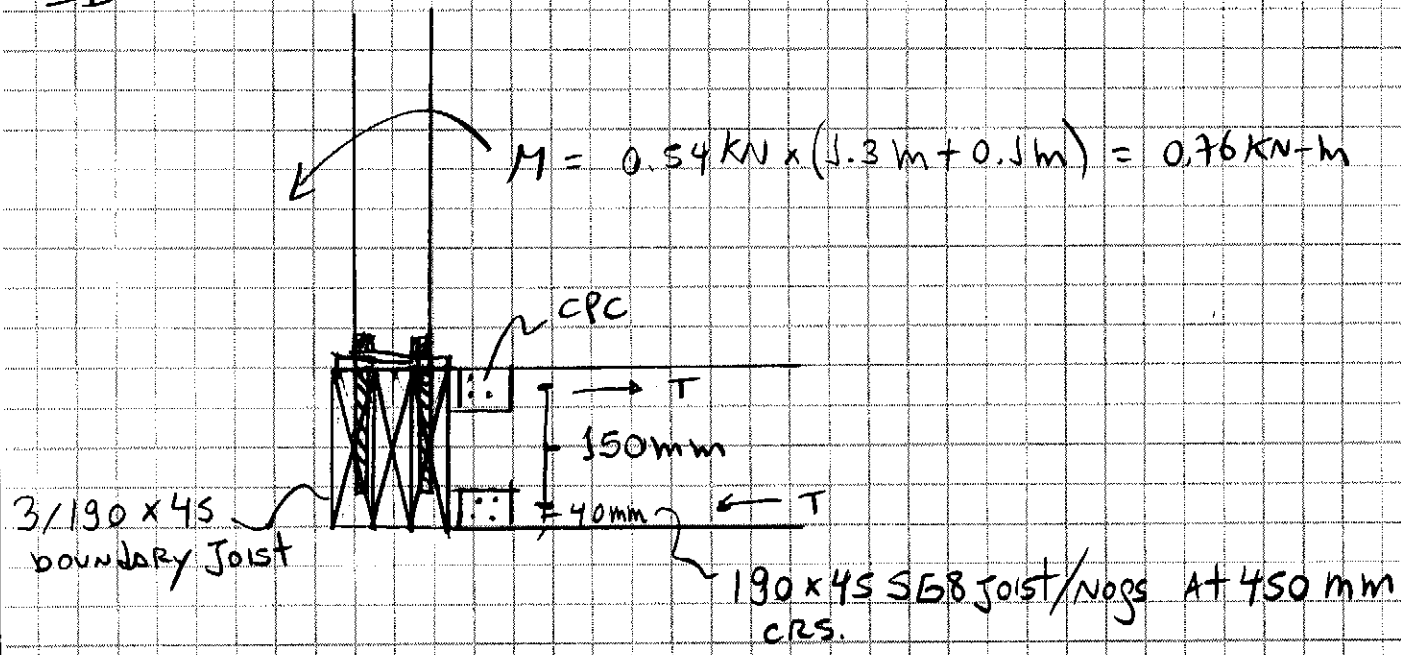

→ D $T = \frac{0.76\ kN-m}{0.15\ m} = 5.1\ KN$

Using CPC 40 cleats at the 2 adjacent joist/nogs to post

→ Load per cleat = $\frac{5.1\ KN}{2} = 2.6\ KN$

Cleat Capacity (PAIR) = 5.5KN , hence OK

Refer cleat specification on pages 12 & 13

LUMBERLOK®

12

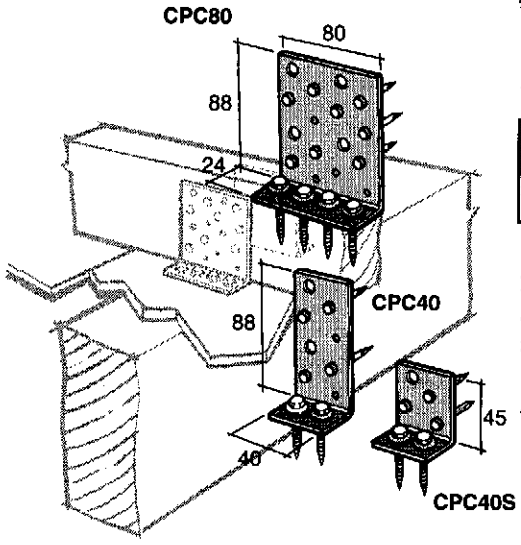

*CONCEALED PURLIN CLEATS CPC40, CPC80, CPC40S

1.55mm G300 Z275 Galvanised Steel

Nominal Rafter Width	50	100
Cleat	CPC40 or CPC40S	CPC80

CPC cleats provide an excellent purlin/rafter fixing in exposed situations, resisting any wind uplift.
The cleats can also be used for exposed rafter to ridge beam connections. Fixed with Type 17-14g Hex Head Screws and LUMBERLOK Product Nails 30mm x 3.15mm diameter (not supplied with product).

Refer to Characteristic Loadings Brochure for design values.
Available in Stainless Steel 304.

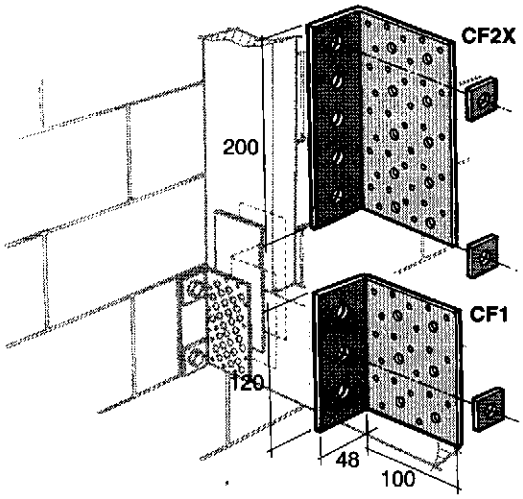

CONCRETE FIXING CLEATS CF1 & CF2X

1.55mm G300 Z275 Galvanised Steel

Both cleats provide a quick and economical method of joining timber trusses, beams, columns to solid concrete or grouted concrete blockwork.
Both cleats can be used on one or two sides of timber members, depending on the loads required. Fixed with LUMBERLOK Product Nails 30mm x 3.15mm diameter and appropriate M12 bolts (not supplied with product). 40x40x5mm washer supplied.

Refer to Characteristic Loadings Brochure for design values.

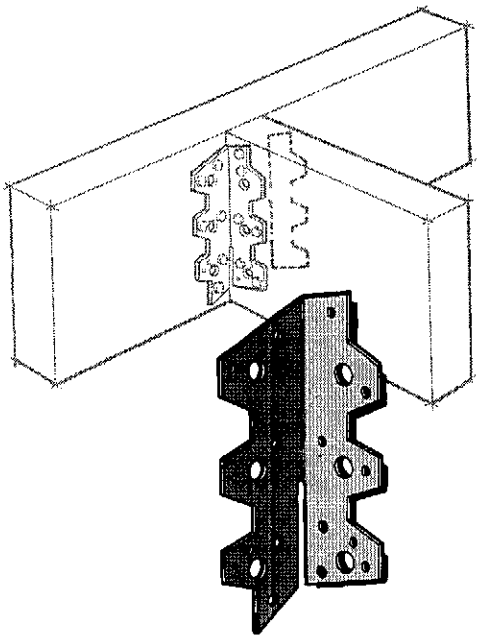

MULTIGRIP

0.91mm G300 Z275 Galvanised Steel

LUMBERLOK Multigrips are a multipurpose product that can be bent into any of five combinations. One product provides for all alternatives with the bending slot enabling easy on-site bending.

Size 125mm high x 38mm flanges. Fix with LUMBERLOK Product Nails 30mm x 3.15mm diameter.
Correct nailing shown below.

Refer to Characteristic Loadings Brochure for design values.
Available in Stainless Steel 304.

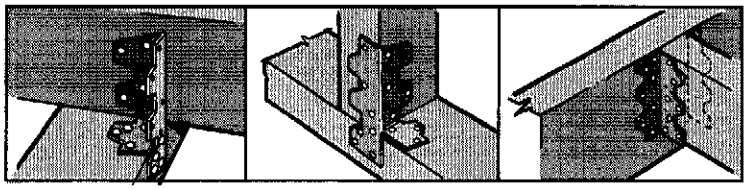

*** Detailed product sheet available**

© Copyright 2011 MiTek Holdings, Inc.
All rights reserved.

LUMBERLOK®

STANDARD FIXING OPTIONS

FIXING TYPE A 0.55kN

1 NAIL

Note: Two nails maybe preferred to prevent batten rolling over with high roof pitches.

Purlin / Batten

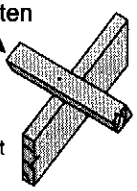

FIXING TYPE B 0.8kN

2 NAILS

Purlin / Batten

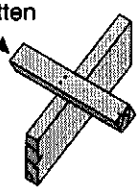

FIXING TYPE C 2.4kN

1 BLUE SCREW

Purlin / Batten

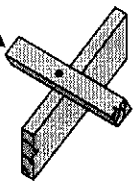

FIXING TYPE D 3.45kN

2 BLUE SCREWS

OR

2 SKEW NAILS plus 2 WIRE DOGS

(for purlin on edge)

Purlin / Batten

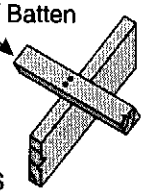

FIXING TYPE E 5.5kN

2 NAILS plus 1 CT200

OR

1 PAIR of CPC40

Purlin / Batten

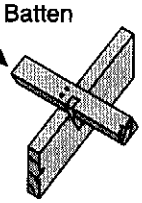

CPC40

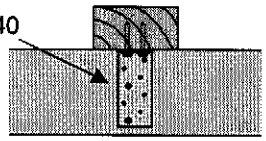

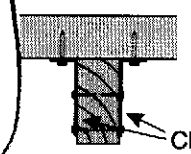

CPC40

FIXING DEFINITIONS

NAIL = Either 90mm x 3.15 dia. power-driven nail or 100mm x 3.75 dia. hand-driven nail

BLUE SCREW = 80mm x 10 gauge LUMBERLOK BLUE SCREW

WIRE DOG = LUMBERLOK WIRE DOG either LH or RH

CT200 = LUMBERLOK Ceiling Tie CT200 bend over purlin, 4 x LUMBERLOK Product Nails 30mm x 3.15 dia. each end

CPC40 = LUMBERLOK CPC40 with 2 x Type 17-14g x 35mm Hex Head Screws per flange

FIXING TOLERANCES

LUMBERLOK BLUE SCREW

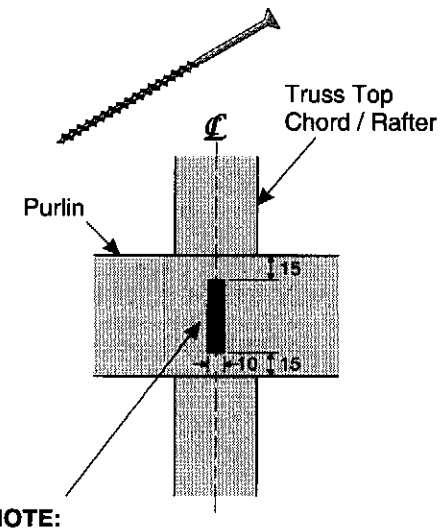

NOTE:

Locate fixings within the shaded area. Care to be taken to avoid over tightening of screws.

PURLIN / BATTEN SPLICE FIXING OPTIONS

FIXING TYPE A & B OVER PURLIN SPLICE

1 nail in each

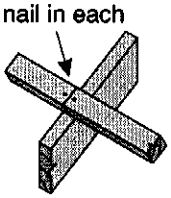

NOTE:

Skew nail when fixing to 35mm rafter or truss

FIXING TYPE C, D or E OVER PURLIN SPLICE

90 x 35mm block fixed to chord or rafter with 4 x 75mm nails

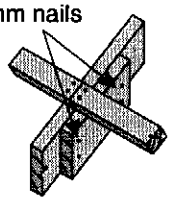

- TYPE C
  1 SCREW
  to each purlin
- TYPE D & E
  1 NAIL plus 1 SCREW to each purlin

© Copyright 2011 MiTek Holdings, Inc.
All rights reserved.

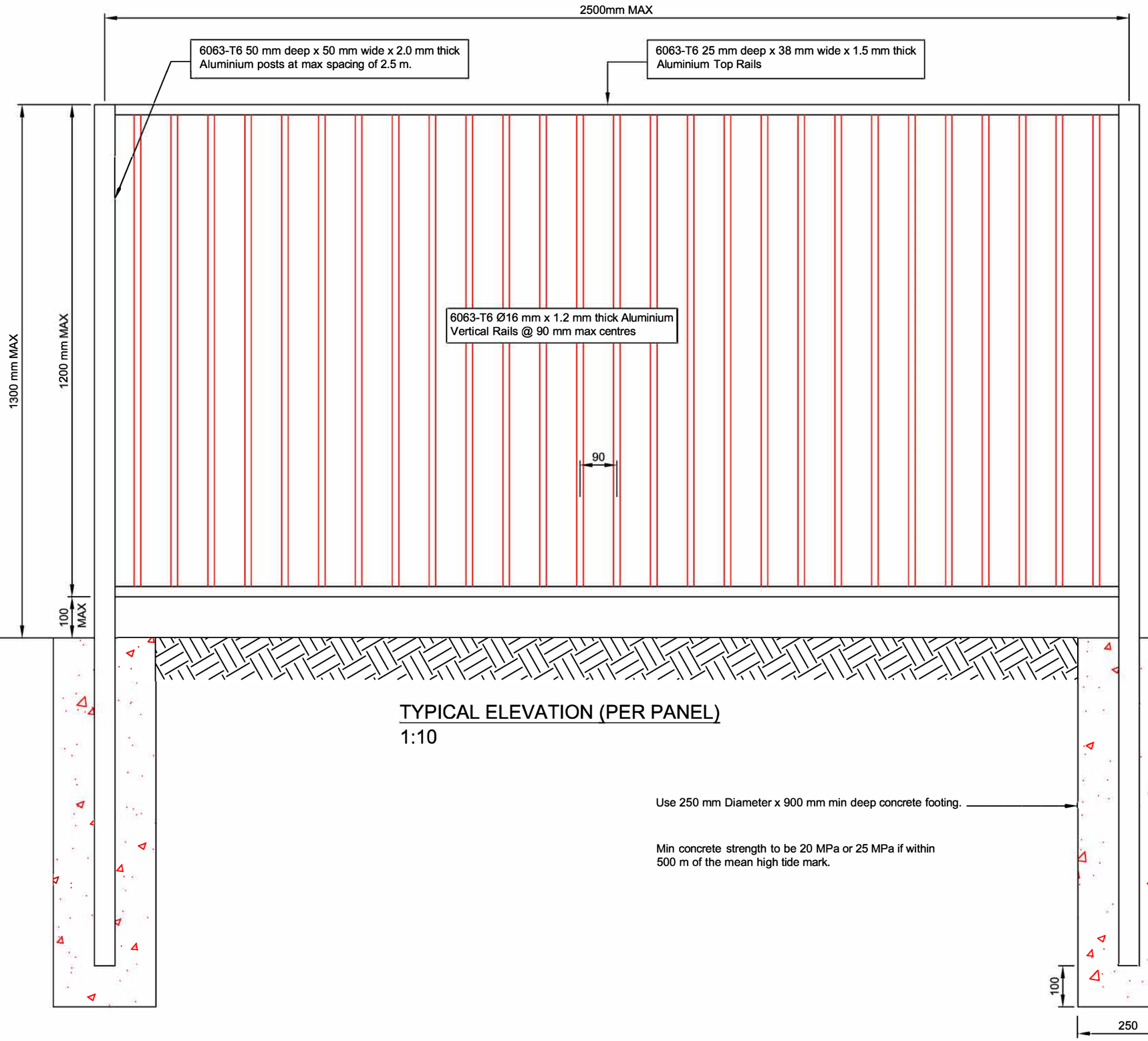

TYPICAL ELEVATION (PER PANEL)
1:10

Use 250 mm Diameter x 900 mm min deep concrete footing.

Min concrete strength to be 20 MPa or 25 MPa if within 500 m of the mean high tide mark.

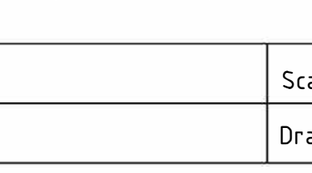

THIS POOL FENCE IS SUITABLE FOR THE FOLLOWING:

WIND LOAD:	UP TO "VERY HIGH" WIND ZONE
SOIL UNDRAINED SHEAR STRENGTH:	50 kPa

NOTE:

1. ALL ALUMINIUM SURFACES SHALL BE PAINTED WHERE THE STRUCTURES ARE TO BE EXPOSED TO EXTREMELY CORROSIVE CONDITIONS AND WHERE THE ALUMINIUM ALLOY PARTS ARE IN CONTACT WITH, OR ARE FASTENED TO, STEEL MEMBERS OR OTHER DISSIMILAR MATERIALS.
2. PAINTING PROCEDURE MUST BE IN ACCORDANCE WITH AS/NZS 1664.
3. ALL WELDING SHALL BE DONE IN ACCORDANCE WITH AS1665.

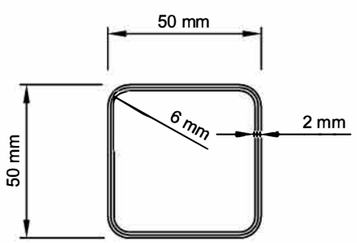

PLAN (POST)
1:2

REVA:27-06-16

P & P CONSULTING ENGINEERS LTD Civil and Structural Engineering 6A Montel Avenue, Henderson ph: 836-1853	WARNER FENCING & GATES LTD	Scales 1:10 , 1:2 (A3)	Project 12/170
	ALUMINIUM SWIMMING POOL FENCES	Drawn JD / Date 12-09-12	Sheet S01

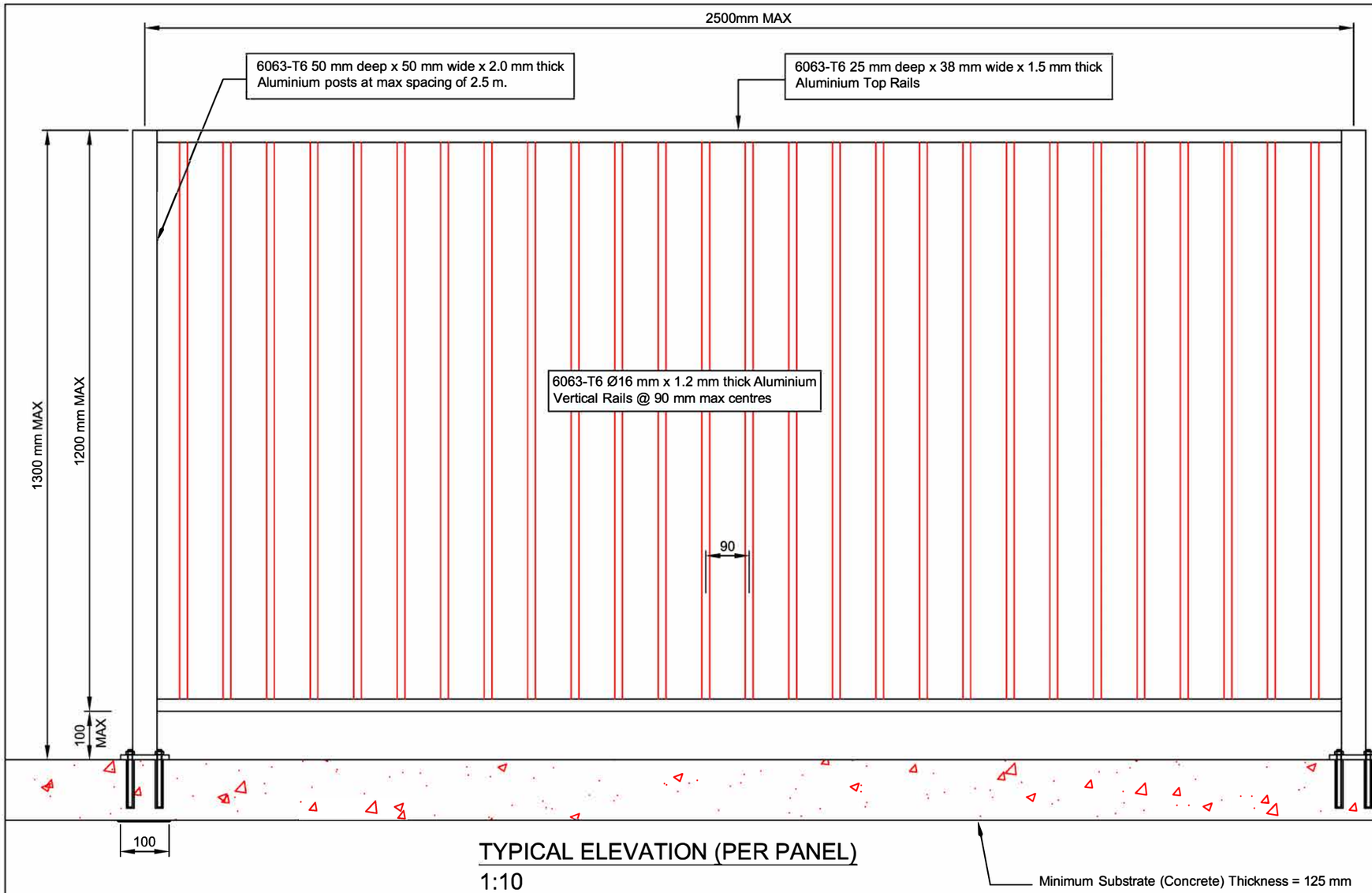

TYPICAL ELEVATION (PER PANEL)
1:10

THIS POOL FENCE IS SUITABLE FOR THE FOLLOWING:

WIND LOAD: UP TO "VERY HIGH" WIND ZONE

NOTE:

1. ALL ALUMINIUM SURFACES SHALL BE PAINTED WHERE THE STRUCTURES ARE TO BE EXPOSED TO EXTREMELY CORROSIVE CONDITIONS AND WHERE THE ALUMINIUM ALLOY PARTS ARE IN CONTACT WITH, OR ARE FASTENED TO, STEEL MEMBERS OR OTHER DISSIMILAR MATERIALS.
2. PAINTING PROCEDURE MUST BE IN ACCORDANCE WITH AS/NZS 1664.
3. ALL WELDING SHALL BE DONE IN ACCORDANCE WITH AS1665.
4. ALL BOLTS TO BE STAINLESS STEEL.

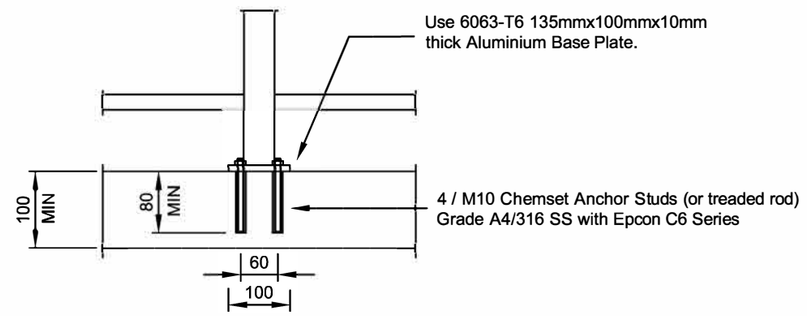

BASE FIXING
1:10

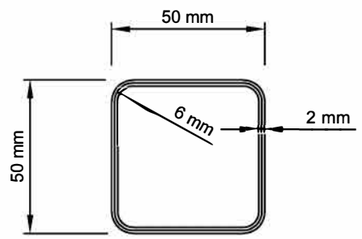

PLAN (POST)
1:2

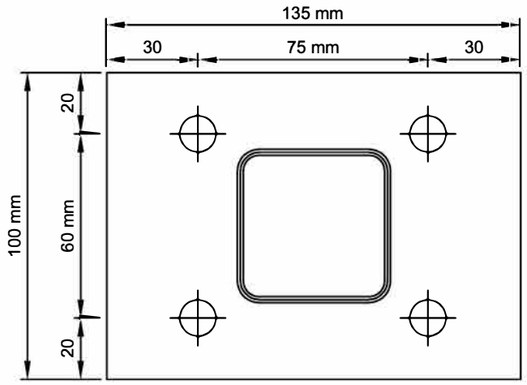

PLAN (BASE PLATE)
1:2

REVA:27-06-16

P & P CONSULTING ENGINEERS LTD Civil and Structural Engineering 6A Montel Avenue, Henderson ph: 836-1853	WARNER FENCING & GATES LTD	Scales 1:10 , 1:2 (A3)	Project 12/170
	ALUMINIUM SWIMMING POOL FENCES (BASE PLATE OPTION)	Drawn JD / Date 12-09-12	Sheet S02

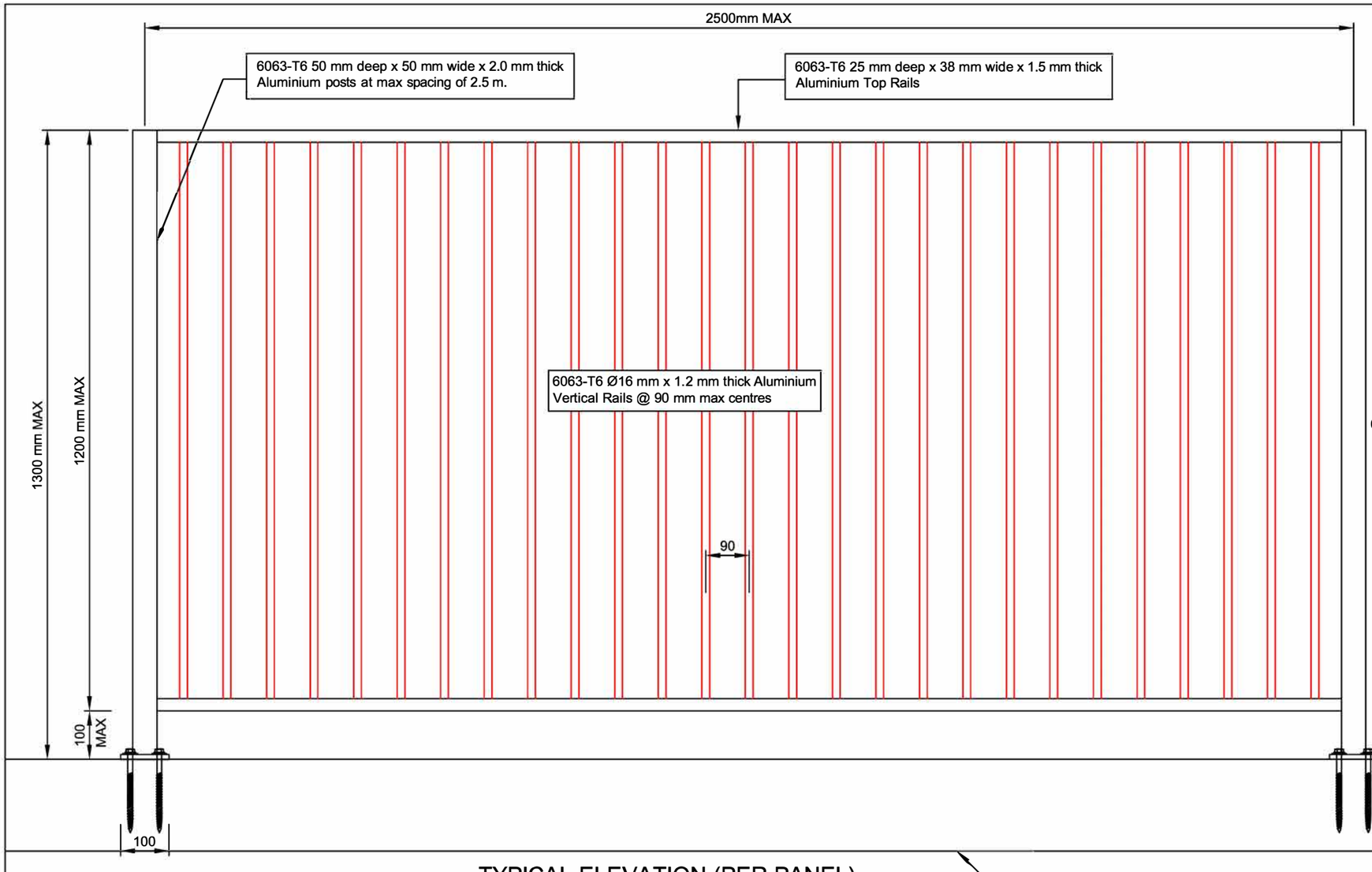

TYPICAL ELEVATION (PER PANEL)
1:10

THIS POOL FENCE IS SUITABLE FOR THE FOLLOWING:

WIND LOAD: UP TO "VERY HIGH" WIND ZONE

NOTE:

1. ALL ALUMINIUM SURFACES SHALL BE PAINTED WHERE THE STRUCTURES ARE TO BE EXPOSED TO EXTREMELY CORROSIVE CONDITIONS AND WHERE THE ALUMINIUM ALLOY PARTS ARE IN CONTACT WITH, OR ARE FASTENED TO, STEEL MEMBERS OR OTHER DISSIMILAR MATERIALS.
2. PAINTING PROCEDURE MUST BE IN ACCORDANCE WITH AS/NZS 1664.
3. ALL WELDING SHALL BE DONE IN ACCORDANCE WITH AS1665.
4. ALL BOLTS TO BE STAINLESS STEEL.

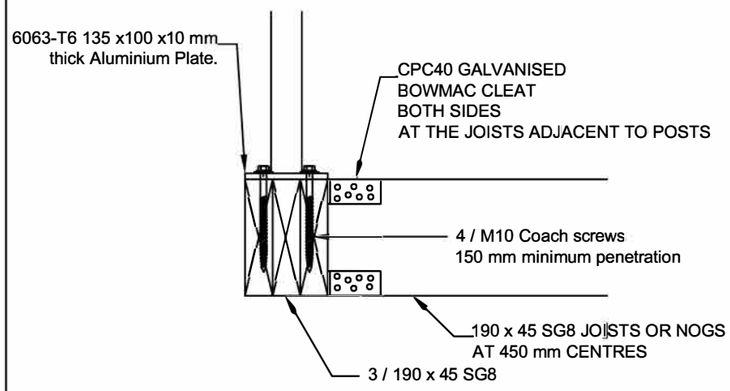

POST TO TIMBER CONNECTION DETAIL
1:10

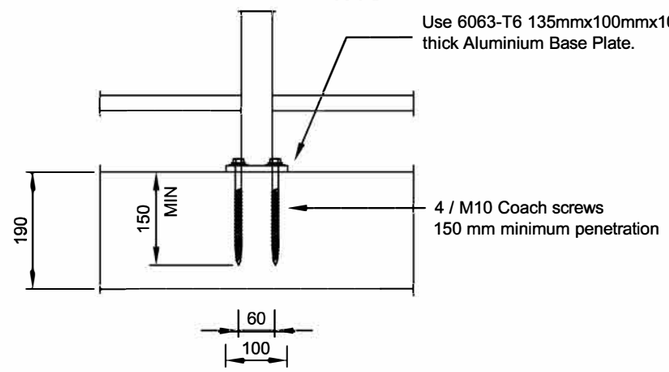

BASE FIXING
1:10

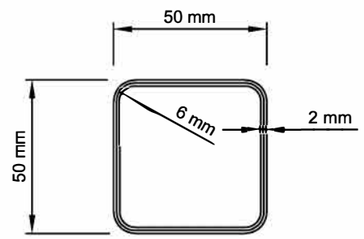

PLAN (POST)
1:2

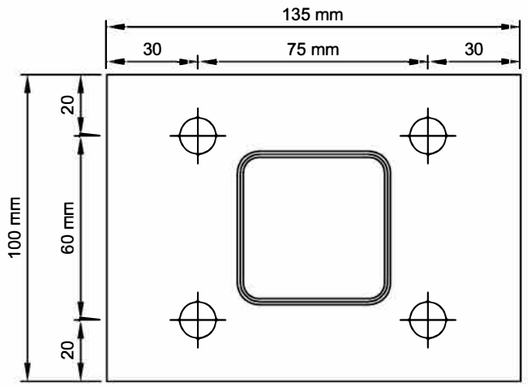

PLAN (BASE PLATE)
1:2

P & P CONSULTING ENGINEERS LTD Civil and Structural Engineering 6A Montel Avenue, Henderson ph: 836-1853	WARNER FENCING & GATES LTD	Scales 1:10 , 1:2 (A3)	Project 12/170
	ALUMINIUM SWIMMING POOL FENCES (BASE PLATE OPTION WITH COACH SCREWS)	Drawn JD/MO | Date 03-08-16	Sheet S03

THIS POOL FENCE IS SUITABLE FOR THE FOLLOWING:

WIND LOAD: UP TO "VERY HIGH" WIND ZONE

NOTE:

1. ALL ALUMINIUM SURFACES SHALL BE PAINTED WHERE THE STRUCTURES ARE TO BE EXPOSED TO EXTREMELY CORROSIVE CONDITIONS AND WHERE THE ALUMINIUM ALLOY PARTS ARE IN CONTACT WITH, OR ARE FASTENED TO, STEEL MEMBERS OR OTHER DISSIMILAR MATERIALS.
2. PAINTING PROCEDURE MUST BE IN ACCORDANCE WITH AS/NZS 1664.
3. ALL WELDING SHALL BE DONE IN ACCORDANCE WITH AS1665.
4. ALL BOLTS TO BE STAINLESS STEEL.

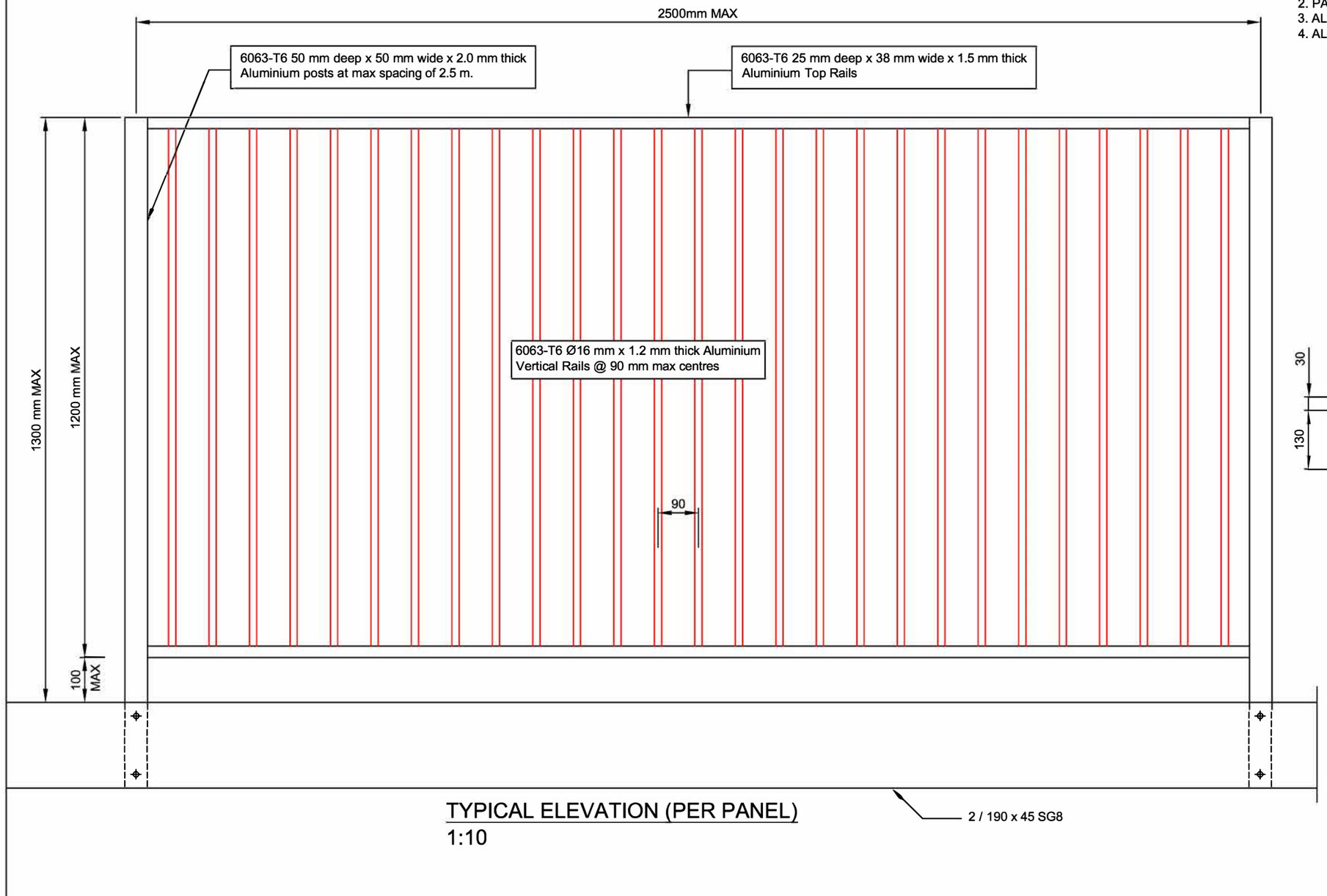

TYPICAL ELEVATION (PER PANEL)
1:10

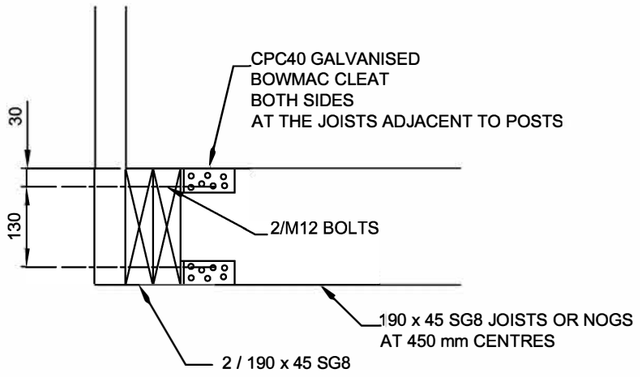

POST TO TIMBER CONNECTION DETAIL
1:10

P & P CONSULTING ENGINEERS LTD Civil and Structural Engineering 6A Montel Avenue, Henderson ph: 836-1853	WARNER FENCING & GATES LTD	Scales 1:10		Project 12/170
	ALUMINIUM SWIMMING POOL FENCES (BOLTED TO TIMBER OPTION)	Drawn JD/MO	Date 03-08-16	Sheet S04

Stud Framing as per NZS 3604:2011 Section 8 - Walls		High Wind
from Table 8.2 - Load bearing walls		
Stud height	**Stud size**	**Stud Spacing**
2.7m	90x45mm	400crs
3.0m	90x45mm	300crs
3.6m	2/90x45mm	300crs
from Table 8.4 - Non-load bearing walls		
Stud height	**Stud size**	**Stud Spacing**
2.7m	90x45mm	400crs
3.0m	90x45mm	300crs

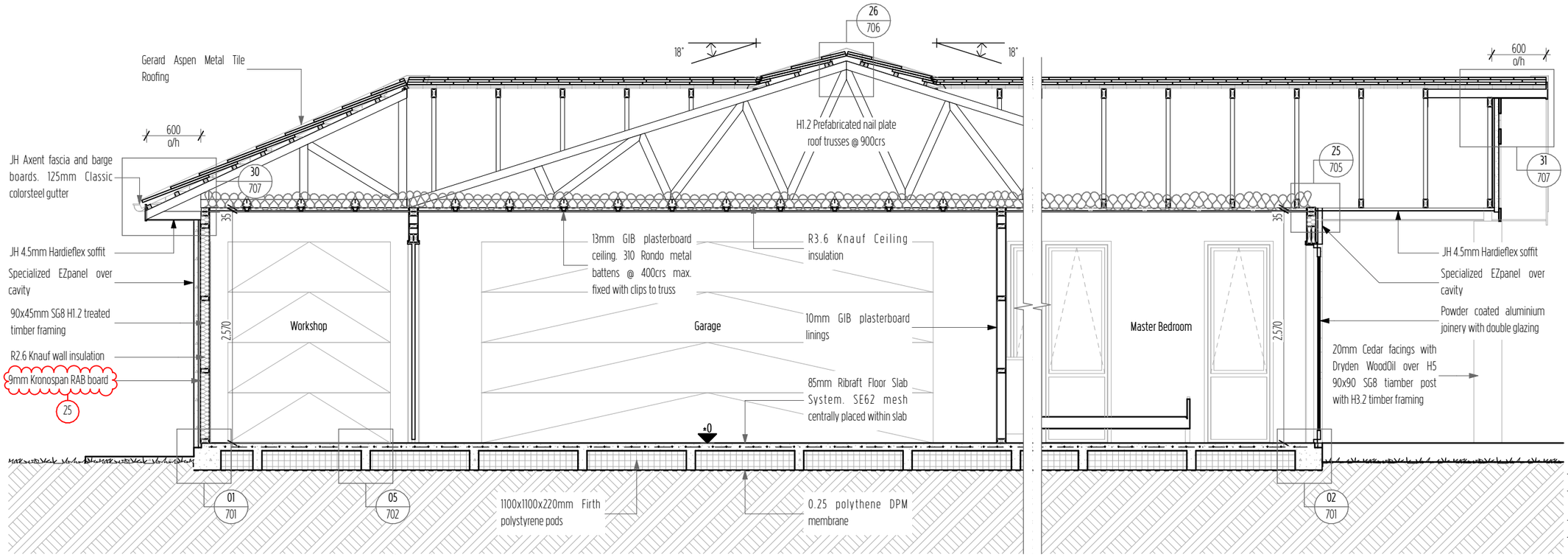

B
201, 504

Cross Section B-B

Scale 1:50

Key/Notes

Refer to the Geotechnical Investigation reference 21076 by Wiley Geotechnical Ltd. dated 27 May 2021 for specific site preparation details, bearing depth and capacity.

A minimum 200 mm layer of compacted hard fill is recommended to be placed for a waffle slab (i.e Rib-Raft) with the foundation being designed for expansive site class 'M – Moderate', as per AS 2870. All topsoil and fill material must be removed before foundation construction commences.

Square stop to ceiling/wall junction

All structural fixings sheltered and exposed in Exposure Zone D to be Type 304 stainless steel as per NZS3604:2011

COASTAL HOMES

Project Title

ACDL Trustee Ltd. D&L Kendall

Site Address

Lot 81 The Sanctuary, Mangawhai

Drawing Issue

Building Consent

Sheet Title

Cross Sections

Scale	Drawn
1:50 @ A3	Marc R. Vale
Date	Checked
15/11/21	CADetailer Ltd.
Drawing no.	Revision
402	06

All dimensions to be verified on site before commencing any work or producing shop drawings. Do not scale.
The copyright of this drawing remains with CH Northland Ltd and CADetailer Ltd.

RevID	ChID	Change Name	Date
03	10	Cedar coating	19/08/21
04	22	Mower garage door moved	19/10/21
05	24	Post Confirmation	6/11/21
06	25	RAB board change	15/11/21

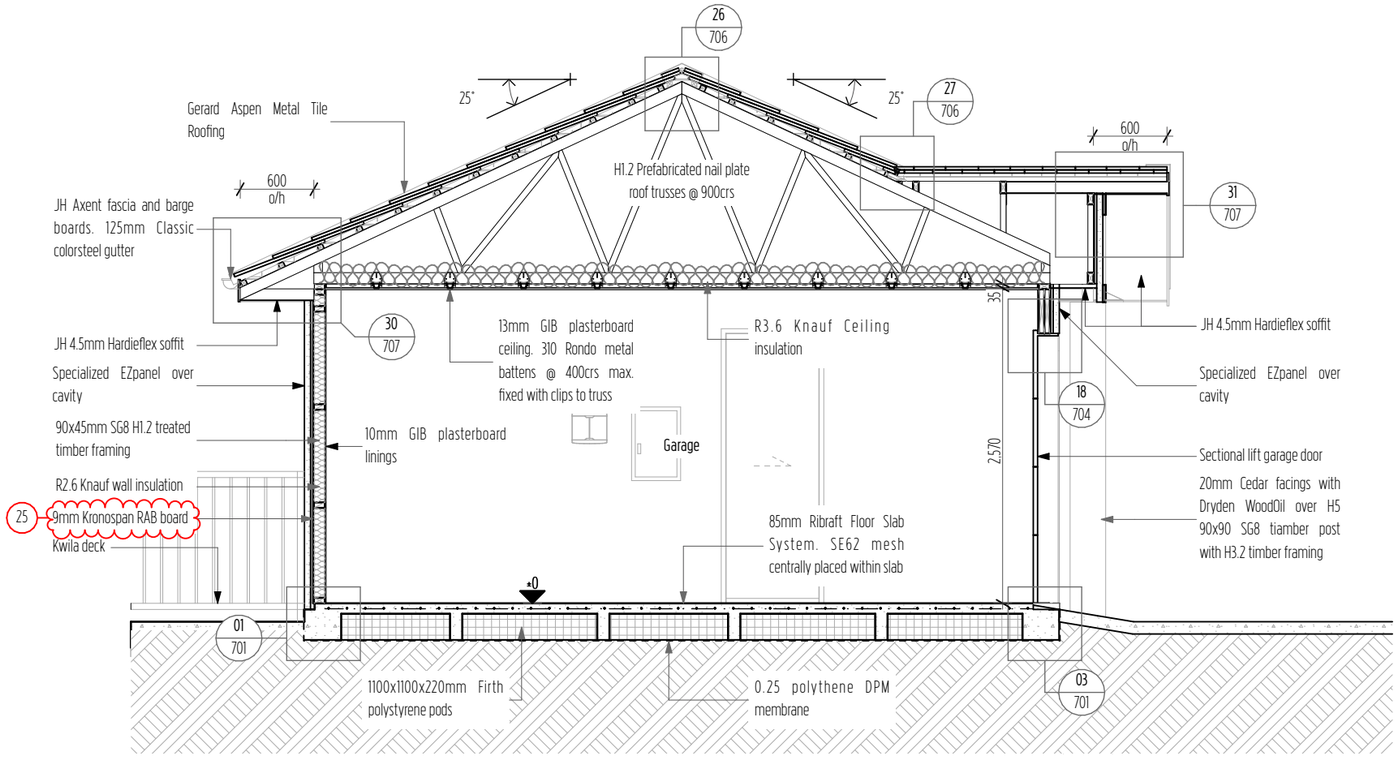

C
201, 504

Cross Section C-C

Scale 1:50

Key/Notes

Refer to the Geotechnical Investigation reference 21076 by Wiley Geotechnical Ltd. dated 27 May 2021 for specific site preparation details, bearing depth and capacity.

A minimum 200 mm layer of compacted hard fill is recommended to be placed for a waffle slab (i.e Rib-Raft) with the foundation being designed for expansive site class 'M – Moderate', as per AS 2870. All topsoil and fill material must be removed before foundation construction commences.

Square stop to ceiling/wall junction

All structural fixings sheltered and exposed in Exposure Zone D to be Type 304 stainless steel as per NZS3604:2011

Stud Framing as per NZS 3604:2011
Section 8 - Walls — High Wind

from Table 8.2 - Load bearing walls

Stud height	Stud size	Stud Spacing
2.7m	90x45mm	400crs
3.0m	90x45mm	300crs
3.6m	2/90x45mm	300crs

from Table 8.4 - Non-load bearing walls

Stud height	Stud size	Stud Spacing
2.7m	90x45mm	400crs
3.0m	90x45mm	300crs

COASTAL HOMES

Project Title
ACDL Trustee Ltd. D&L Kendall

Site Address
Lot 81 The Sanctuary, Mangawhai

Drawing Issue
Building Consent

Sheet Title
Cross Sections

Scale	Drawn
1:50 @ A3	Marc R. Vale
Date	Checked
15/11/21	CADetailer Ltd.
Drawing no.	Revision
403	05

All dimensions to be verified on site before commencing any work or producing shop drawings. Do not scale.
The copyright of this drawing remains with CH Northland Ltd and CADetailer Ltd.

RevID	ChID	Change Name	Date
02	01	Building Consent	27/06/21
03	10	Cedar coating	18/08/21
04	24	Post Confirmation	6/11/21
05	25	RAB board change	15/11/21

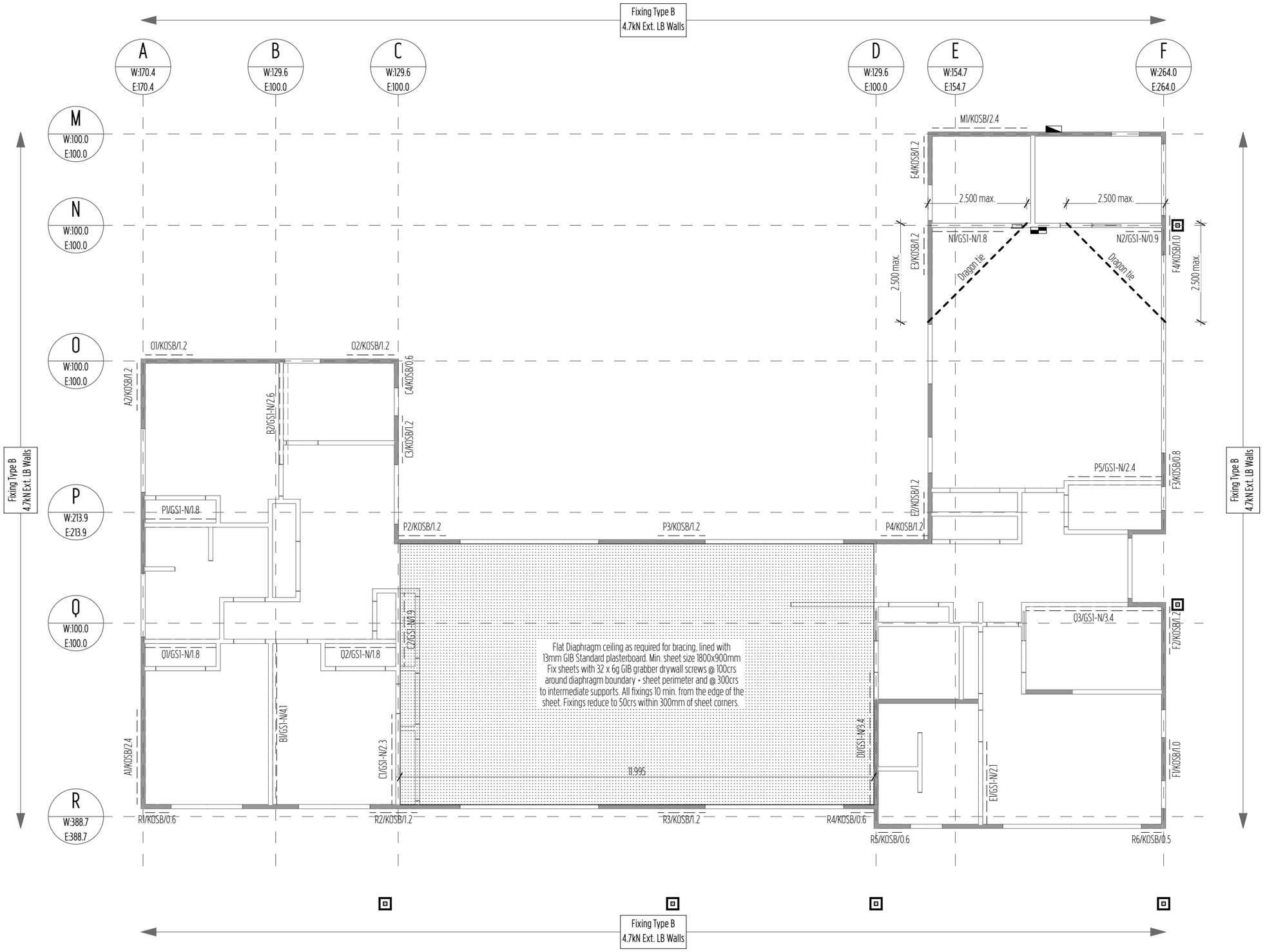

Key/Notes

Load-bearing wall

Non-Load bearing wall

Stud to Top Plate fixing as per MiTek Structural fixings on-site Guide page 88 as an alternative to NZS3604:2011 table 8.18

Lintel fixing as per MiTek Structural fixings on-site Guide page 73 as an alternative to NZS3604:2011 table 8.14 & figure 8.12

All bracing elements shall be installed and fixed as per the manufacturers recommendations.

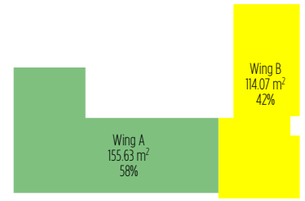

Bracing Wing Key

Bracing Wings representing % of overall building as per GIB Bracing Supplement Document Issue Date December 2016.

Wing A - 58% of Demand
Wing Along = 988 x 58% = 573.04BU's - 1312BU's achieved ✓
Wing Across = 1530 x 58% = 887.40BU's - 1596BU's achieved ✓
Earthquake Along & Across = 807 x 58% = 468.06BU's - 1164 & 1389BU's achieved ✓

Wing B - 42% of Demand
Wing Along = 988 x 42% = 414.96BU's - 1086BU's achieved ✓
Wing Across = 1530 x 42% = 642.60BU's - 941BU's achieved ✓
Earthquake Along & Across = 807 x 42% = 338.94BU's - 858 & 882BU's achieved ✓

25

COASTAL HOMES

Project Title
ACDL Trustee Ltd. D&L Kendall

Site Address
Lot 81 The Sanctuary, Mangawhai

Drawing Issue
Building Consent

Sheet Title
Bracing + Fixing Plan

Scale	Drawn
1:100 @ A3	Marc R. Vale
Date	Checked
15/11/21	CADetailer Ltd.
Drawing no.	Revision
503	06

All dimensions to be verified on site before commencing any work or producing shop drawings. Do not scale.
The copyright of this drawing remains with CH Northland Ltd and CADetailer Ltd.

RevID	ChID	Change Name	Date
03	12	Bracing Wing percentages	18/08/21
04	21	Lounge wall moved closer	25/08/21
05	22	Mower garage door moved	19/10/21
06	25	RAB board change	15/11/21

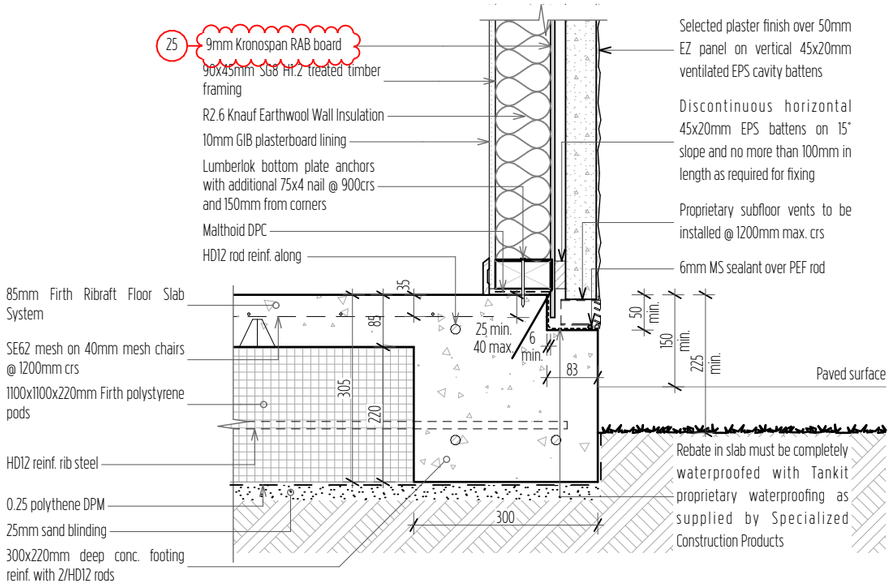

01 Ribraft Edge Beam - EZpanel

Scale 1:10

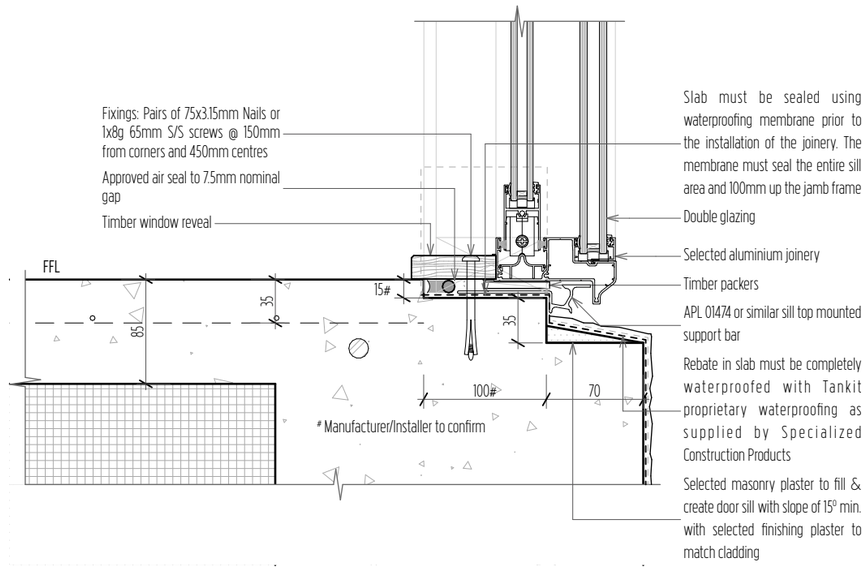

02 Joinery Sill Rebate - EZpanel

Scale 1:5

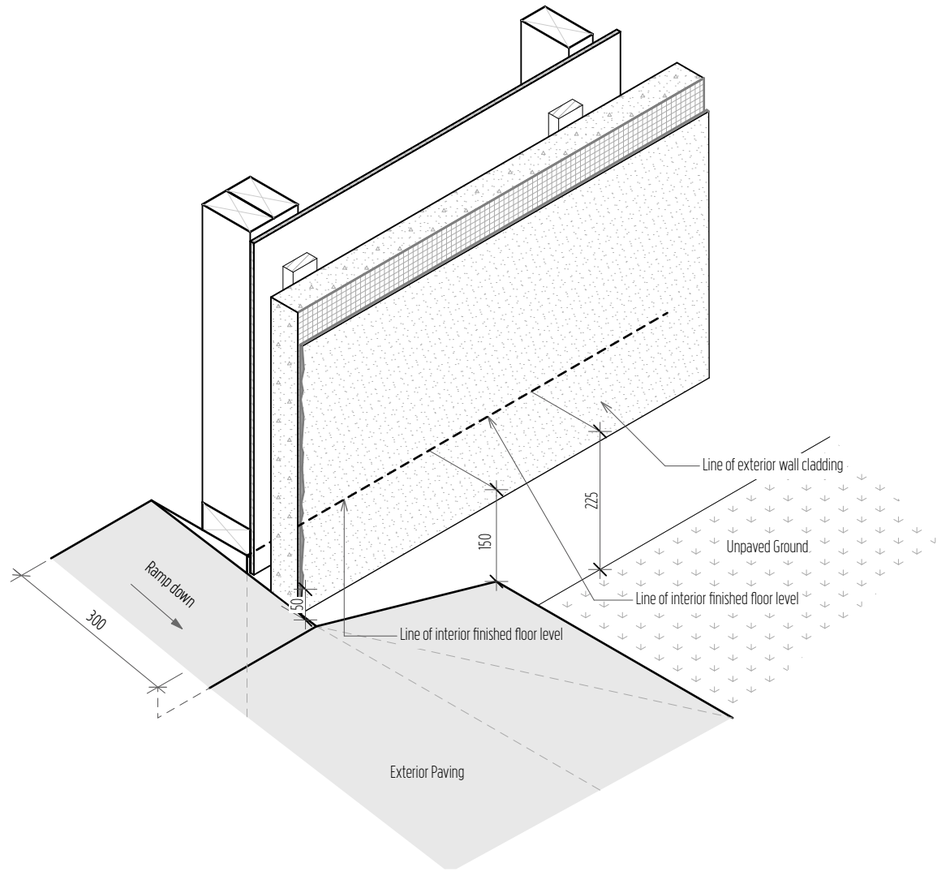

03 Garage Door Threshold - EZpanel

Scale 1:10

Key/Notes

Refer to the Geotechnical Investigation reference 21076 by Wiley Geotechnical Ltd. dated 27 May 2021 for specific site preparation details, bearing depth and capacity.

A minimum 200 mm layer of compacted hard fill is recommended to be placed for a waffle slab (i.e Rib-Raft) with the foundation being designed for expansive site class 'M – Moderate', as per AS 2870. All topsoil and fill material must be removed before foundation construction commences.

COASTAL HOMES

Project Title

ACDL Trustee Ltd. D&L Kendall

Site Address

Lot 81 The Sanctuary, Mangawhai

Drawing Issue

Building Consent

Sheet Title

Details - Foundation

Scale	Drawn
1:10, 1:5 @ A3	Marc R. Vale
Date	Checked
15/11/21	CADetailer Ltd.
Drawing no.	Revision
701	04

All dimensions to be verified on site before commencing any work or producing shop drawings. Do not scale.
The copyright of this drawing remains with CH Northland Ltd and CADetailer Ltd.

RevID	ChID	Change Name	Date
01			27/06/21
02	18	Joinery Sill update	25/08/21
03	23	Insulation Confirmation	6/11/21
04	25	RAB board change	15/11/21

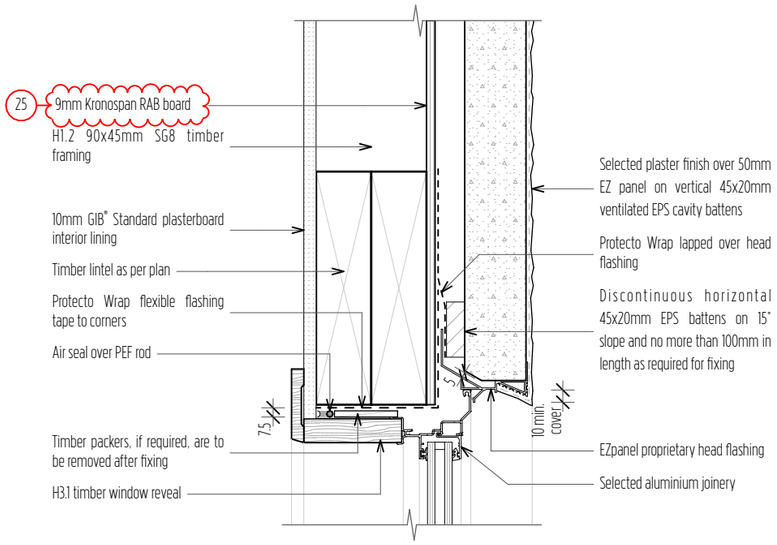

15 Window Head - EZpanel

Scale 1:5

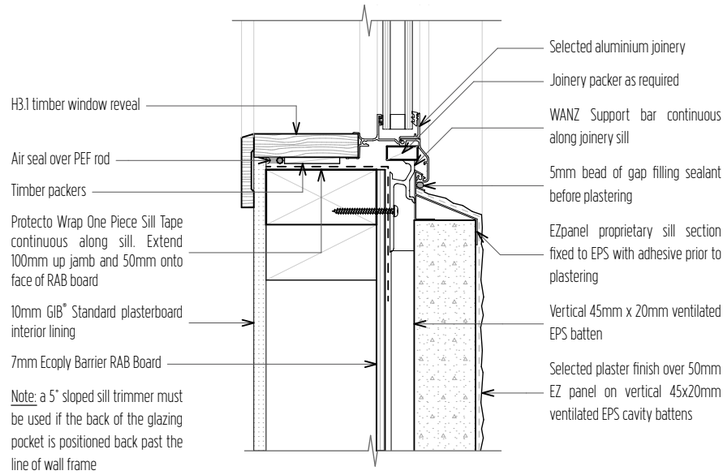

16 Window Sill - EZpanel

Scale 1:5

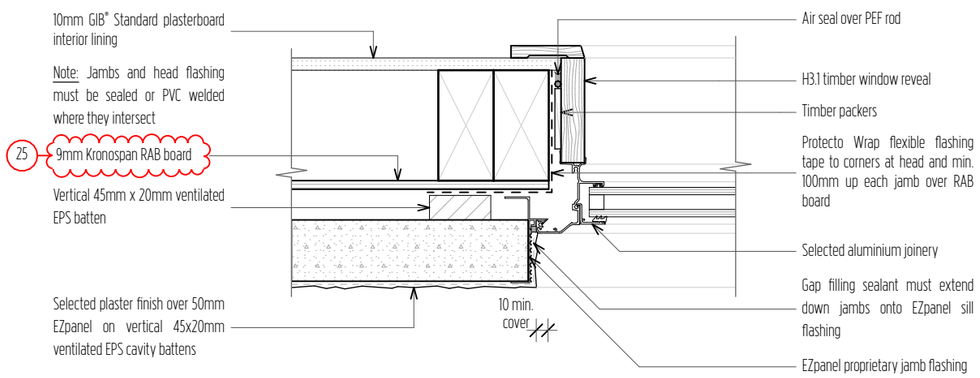

17 Window Jamb - EZpanel

Scale 1:5

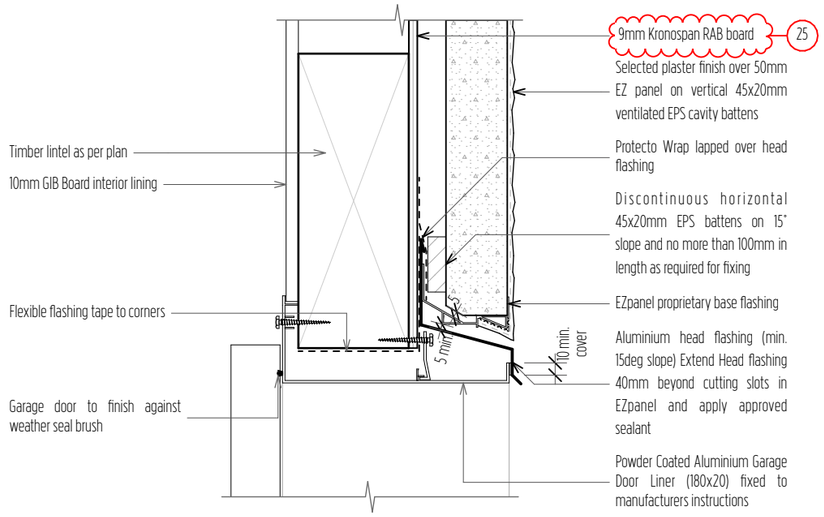

18 Garage Door Head - EZpanel

Scale 1:5

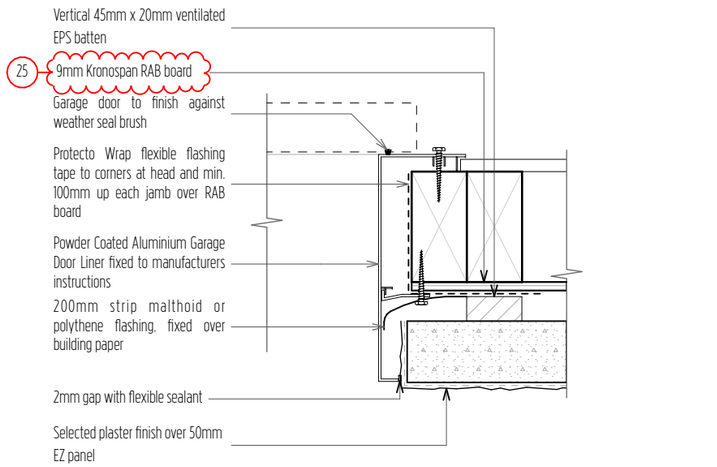

19 Garage Door Jamb - EZpanel

Scale 1:5

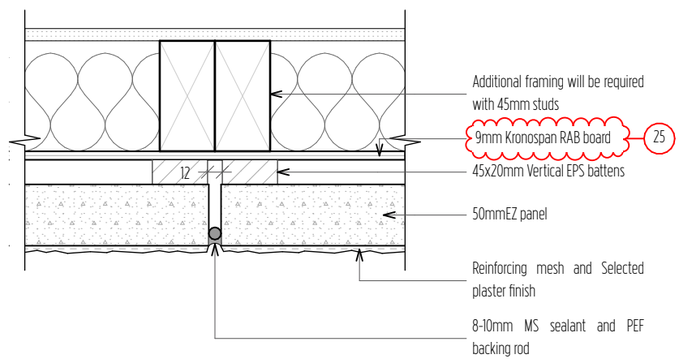

20 Vertical Control Joint - EZpanel

Scale 1:5

COASTAL HOMES

Project Title

ACDL Trustee Ltd. D&L Kendall

Site Address

Lot 81 The Sanctuary, Mangawhai

Drawing Issue

Building Consent

Sheet Title

Details - Cladding

Scale	Drawn
1:5 @ A3	Marc R. Vale
Date	Checked
15/11/21	CADetailer Ltd.
Drawing no.	Revision
704	02

All dimensions to be verified on site before commencing any work or producing shop drawings. Do not scale.
The copyright of this drawing remains with CH Northland Ltd and CADetailer Ltd.

RevID	ChID	Change Name	Date
01			27/06/21
02	25	RAB board change	15/11/21

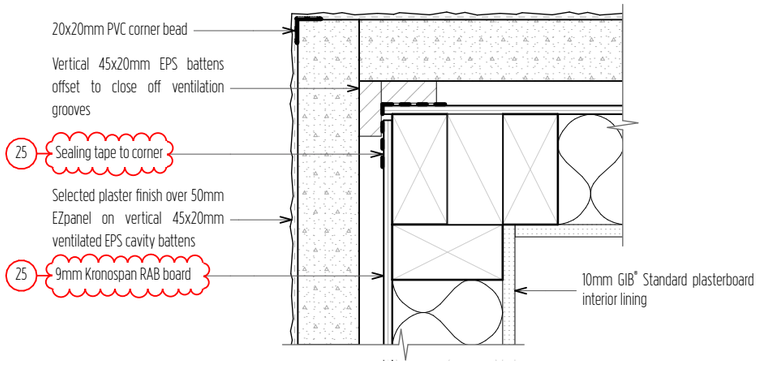

21 External Corner - EZpanel

Scale 1:5

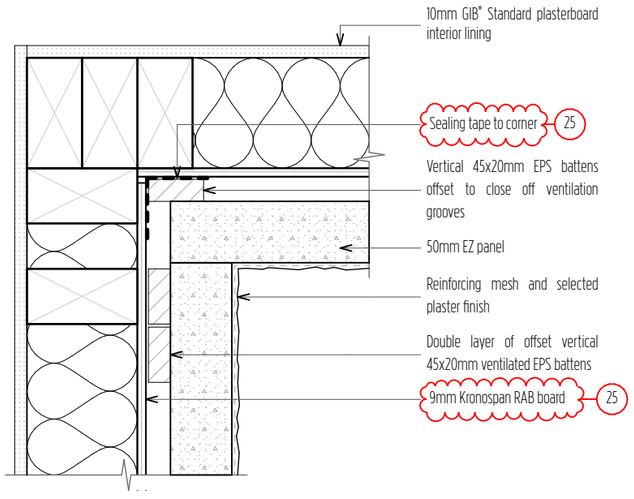

22 Internal Corner - EZpanel

Scale 1:5

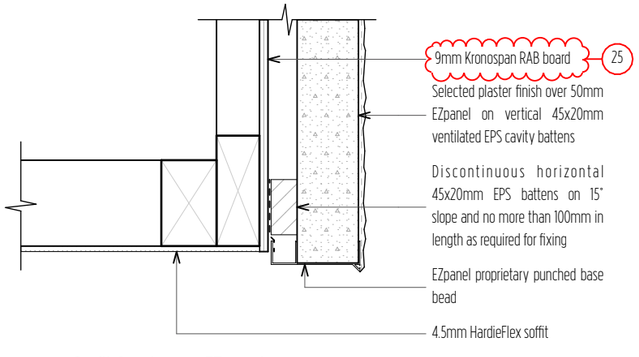

25 Soffit Overhang - EZpanel

Scale 1:5

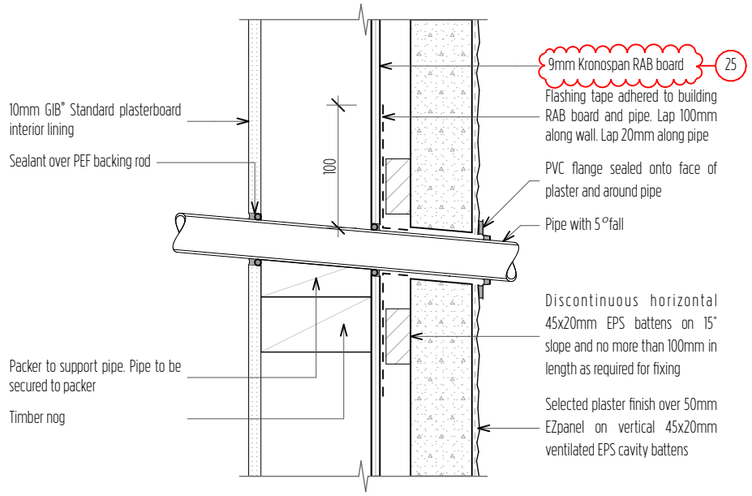

23 Pipe Penetration - EZpanel

Scale 1:5

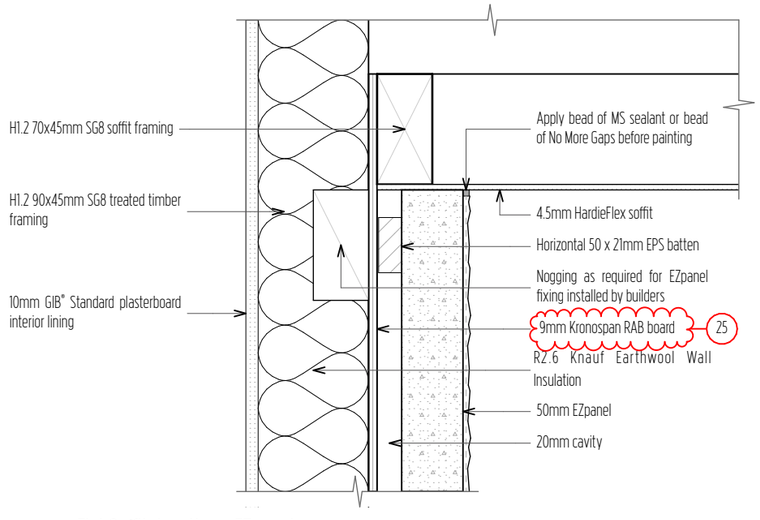

24 Flat Soffit Junction - EZpanel

Scale 1:5

COASTAL HOMES

Project Title

ACDL Trustee Ltd. D&L Kendall

Site Address

Lot 81 The Sanctuary, Mangawhai

Drawing Issue

Building Consent

Sheet Title

Details - Cladding

Scale	Drawn
1:5 @ A3	Marc R. Vale
Date	Checked
15/11/21	CADetailer Ltd.
Drawing no.	Revision
705	03

All dimensions to be verified on site before commencing any work or producing shop drawings. Do not scale.
The copyright of this drawing remains with CH Northland Ltd and CADetailer Ltd.

RevID	ChID	Change Name	Date
01			27/06/21
02	23	Insulation Confirmation	6/11/21
03	25	RAB board change	15/11/21

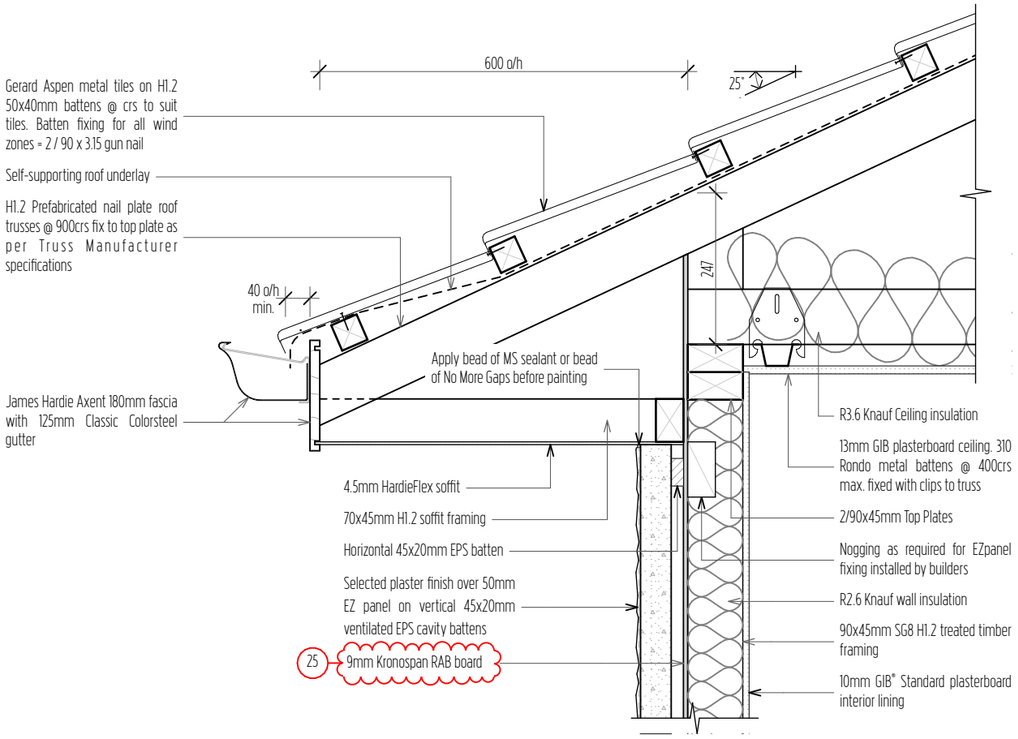

30 25deg. Metal Tile Heeled Eave - EZpanel

Scale 1:10

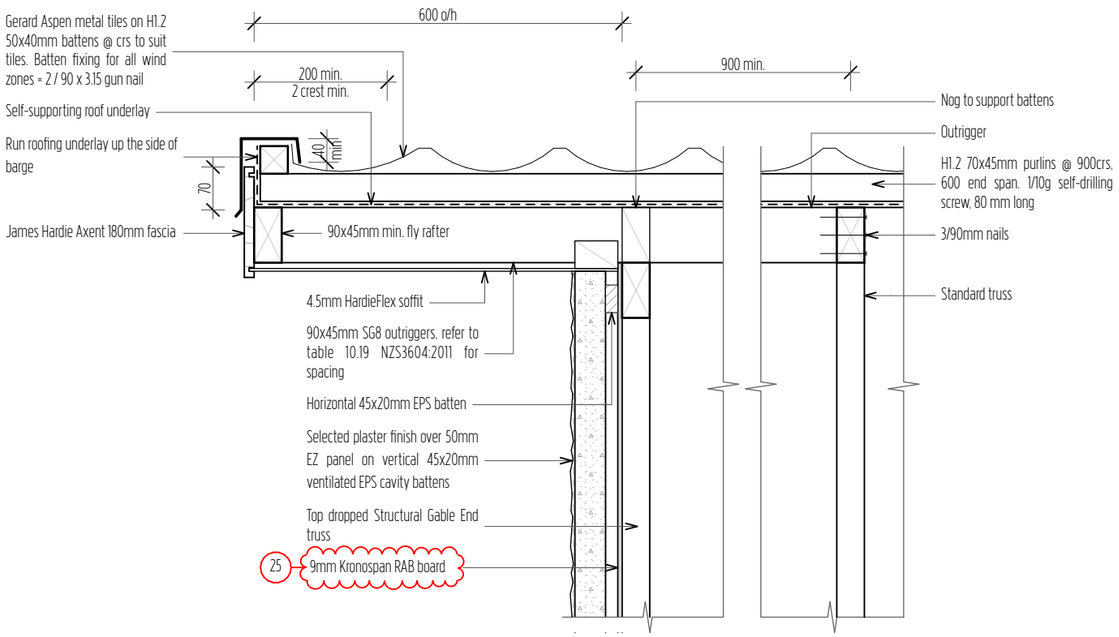

31 Metal Tile Truss Barge - EZpanel

Scale 1:10

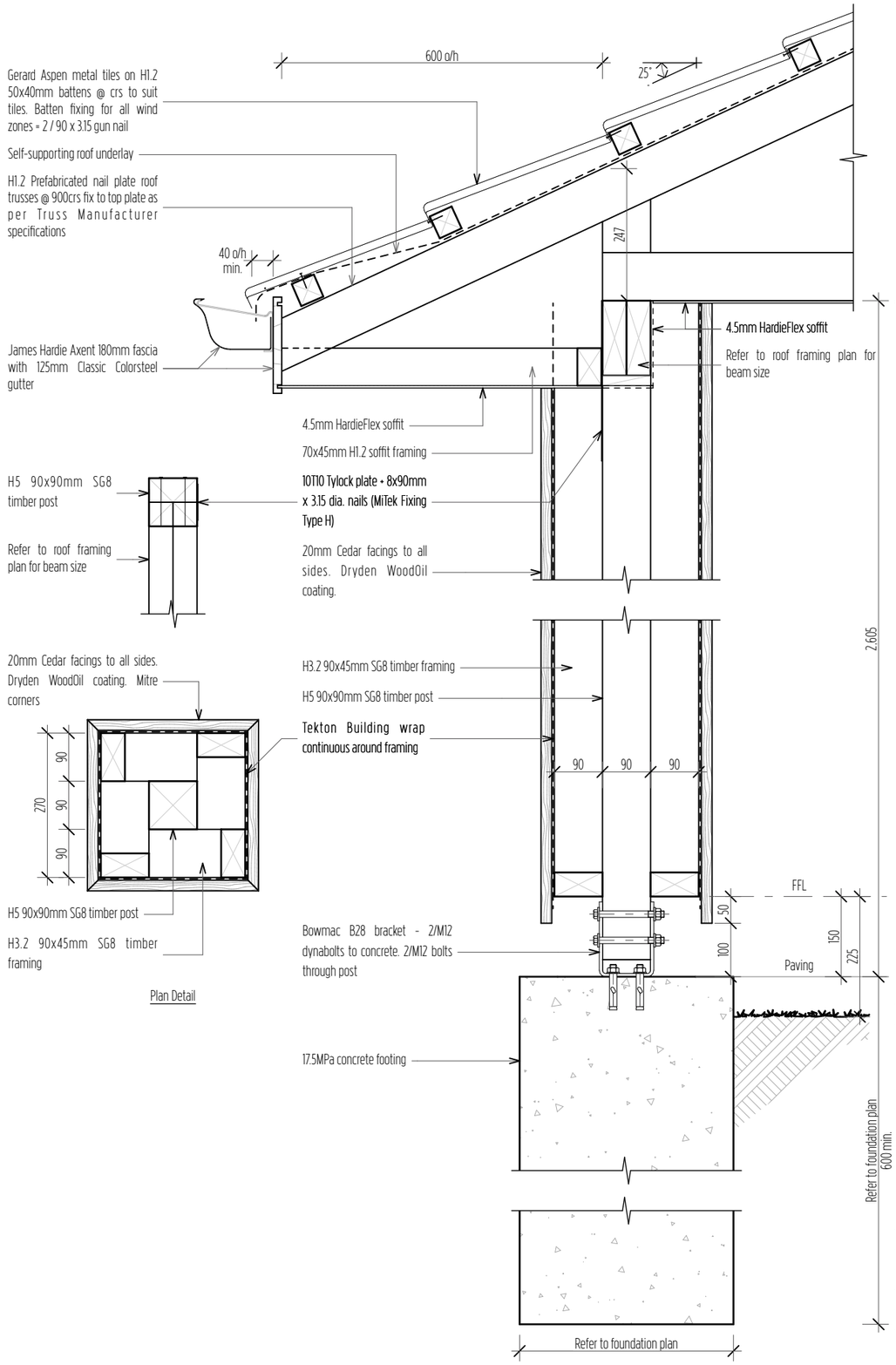

32 25deg. Metal Tile Alfresco Eave - EZpanel

Scale 1:10

COASTAL HOMES

Project Title

ACDL Trustee Ltd. D&L Kendall

Site Address

Lot 81 The Sanctuary, Mangawhai

Drawing Issue

Building Consent

Sheet Title

Details - Roofing

Scale	Drawn
1:10 @ A3	Marc R. Vale
Date	Checked
15/11/21	CADetailer Ltd.
Drawing no.	Revision
707	04

All dimensions to be verified on site before commencing any work or producing shop drawings. Do not scale.
The copyright of this drawing remains with CH Northland Ltd and CADetailer Ltd.

RevID	ChID	Change Name	Date
02	10	Cedar coating	18/08/21
	17	Post footings	
03	19	Post uplift	25/08/21
04	25	RAB board change	15/11/21

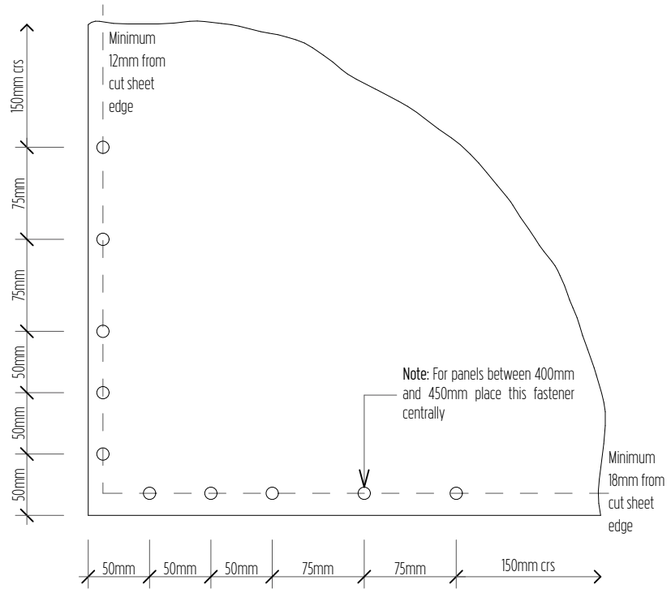

Unless stated all fastener spacings are maximums.

38 Corner Fastener Pattern

Scale 1:5

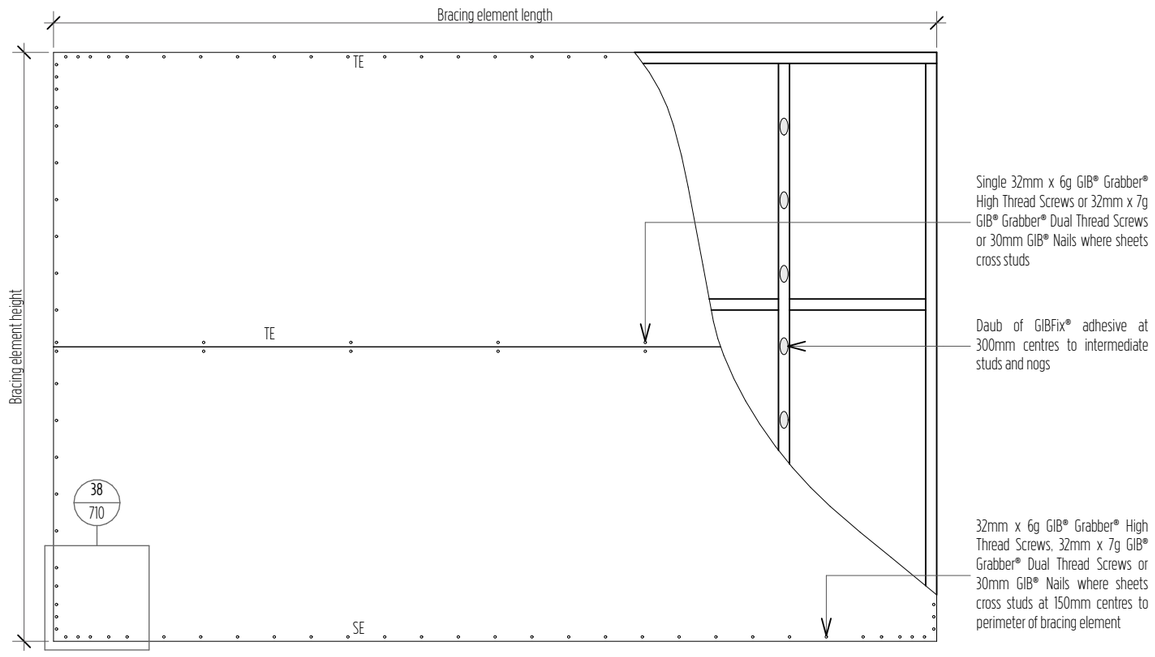

Specification code	Minimum length (m)	Lining requirement
GS1-N	0.4	Any 10mm or 13mm GIB® Standard plasterboard to one side only

39 GS1-N Horizontal Fixing

Scale 1:25

Key/Notes

TE Tapered Edge

SE Square Edge

25 Refer to Kronospan Documentation for bracing details

COASTAL HOMES

Project Title

ACDL Trustee Ltd. D&L Kendall

Site Address

Lot 81 The Sanctuary, Mangawhai

Drawing Issue

Building Consent

Sheet Title

Details - Bracing

Scale	Drawn
1:5, 1:25 @ A3	Marc R. Vale
Date	Checked
15/11/21	CADetailer Ltd.
Drawing no.	Revision
710	02

All dimensions to be verified on site before commencing any work or producing shop drawings. Do not scale.
The copyright of this drawing remains with CH Northland Ltd and CADetailer Ltd.

RevID	ChID	Change Name	Date
01			27/06/21
02	25	RAB board change	15/11/21

25

BRACING CALCULATIONS

TABLE: Default

Location of Storey	Single	Wind Zone	High
Room in Roof Space	No	Earthquake Zone	1
Building Width (BW)	17.6m	Soil Class	E - Very Soft
Building Length (BL)	25.9m		
Gross Floor Area (GFA)	269.69m²	W along	55.0BU/m
Floor Height to Apex	5m	W along x BW	968.0BU
Roof Height Above Eaves	3m	W across	60.0BU/m
Roof Pitch	0 - 25°	W across x BL	1,554.6BU
Roof Style	Gable		
Double Top Plate	Yes	EQ	3.0BU/m²
Floor Load	2kPa	EQ x GFA	809.1BU
Cladding Weights:			
- Subfloor	Concrete Floor		
- Wall	Medium		
- Roof	Light	Calculations based on NZS3604:2011	

BRACING ALONG

Required			Provided							Achieved	
Line	W BU	EQ BU	Brace	Type	W BU/m	EQ BU/m	Length m	Height m	Angle	W BU	EQ BU
M	100.0	100.0	M-1	KOSB	123.0	107.0	2.4	2.6	-	277.8	241.7
										277.8	241.7
N	100.0	100.0	N-1	GS1-N	70.0	60.0	1.8	2.6	-	126.0	108.0
			N-2	GS1-N	50.0	55.0	0.9	2.6	-	45.0	49.5
										171.0	157.5
O	100.0	100.0	O-1	KOSB	123.0	107.0	1.2	2.6	-	138.9	120.8
			O-2	KOSB	123.0	107.0	1.2	2.6	-	138.9	120.8
										277.8	241.7
P	213.9	213.9	P-1	GS1-N	70.0	60.0	1.8	2.6	-	125.3	107.4
			P-2	KOSB	123.0	107.0	1.2	2.6	-	138.9	120.8
			P-3	KOSB	123.0	107.0	1.2	2.6	-	138.9	120.8
			P-4	KOSB	123.0	107.0	1.2	2.6	-	138.9	120.8
			P-5	GS1-N	70.0	60.0	2.4	2.6	-	164.9	141.3
										706.9	611.2
Q	100.0	100.0	Q-1	GS1-N	70.0	60.0	1.8	2.6	-	125.3	107.4
			Q-2	GS1-N	70.0	60.0	1.8	2.6	-	125.3	107.4
			Q-3	GS1-N	70.0	60.0	3.4	2.6	-	240.1	205.8
										490.7	420.6
R	388.7	388.7	R-1	KOSB	91.0	104.0	0.6	2.6	-	51.4	58.7
			R-2	KOSB	123.0	107.0	1.2	2.6	-	138.9	120.8
			R-3	KOSB	123.0	107.0	1.2	2.6	-	138.9	120.8
			R-4	KOSB	91.0	104.0	0.6	2.6	-	51.4	58.7
			R-5	KOSB	91.0	104.0	0.6	2.6	-	51.4	58.7
			R-6	KOSB	89.0	111.0	0.5	2.6	-	42.7	53.3
										474.7	471.2
			Total						Achieved	2,399.0	2,143.9
									Required	968.0	809.1

BRACING ACROSS

Required			Provided							Achieved	
Line	W BU	EQ BU	Brace	Type	W BU/m	EQ BU/m	Length m	Height m	Angle	W BU	EQ BU
A	170.4	170.4	A-1	KOSB	123.0	107.0	2.4	2.6	-	277.8	241.7
			A-2	KOSB	123.0	107.0	1.2	2.6	-	138.9	120.8
										416.8	362.5
B	129.6	100.0	B-1	GS1-N	70.0	60.0	4.1	2.6	-	284.9	244.2
			B-2	GS1-N	70.0	60.0	2.6	2.6	-	179.3	153.7
										464.2	397.9
C	129.6	100.0	C-1	GS1-N	70.0	60.0	2.3	2.6	-	159.5	136.7
			C-2	GS1-N	70.0	60.0	1.9	2.6	-	130.6	111.9
			C-3	KOSB	123.0	107.0	1.2	2.6	-	138.9	120.8
			C-4	KOSB	91.0	104.0	0.6	2.6	-	51.4	58.7
										480.4	428.2
D	129.6	100.0	D-1	GS1-N	70.0	60.0	3.4	2.6	-	234.6	201.1
										234.6	201.1
E	154.7	154.7	E-1	GS1-N	70.0	60.0	2.1	2.6	-	146.1	125.2
			E-2	KOSB	123.0	107.0	1.2	2.6	-	138.9	120.8
			E-3	KOSB	123.0	107.0	1.2	2.6	-	138.9	120.8
			E-4	KOSB	123.0	107.0	1.2	2.6	-	138.9	120.8
										562.8	487.8
F	264.0	264.0	F-1	KOSB	91.0	104.0	1.0	2.6	-	85.6	97.9
			F-2	KOSB	123.0	107.0	1.2	2.6	-	138.9	120.8
			F-3	KOSB	91.0	104.0	0.8	2.6	-	68.5	78.3
			F-4	KOSB	91.0	104.0	1.0	2.6	-	85.2	97.4
										378.3	394.4
			Total						Achieved	2,537.1	2,271.9
									Required	1,554.6	809.1

COASTAL HOMES

Project Title

ACDL Trustee Ltd. D&L Kendall

Site Address

Lot 81 The Sanctuary, Mangawhai

Drawing Issue

Building Consent

Sheet Title

Bracing Calculations

Scale	Drawn
N/A	Marc R. Vale
Date	Checked
15/11/21	CADetailer Ltd.
Drawing no.	Revision
803	03

All dimensions to be verified on site before commencing any work or producing shop drawings. Do not scale.
The copyright of this drawing remains with CH Northland Ltd and CADetailer Ltd.

RevID	ChID	Change Name	Date
01			14/05/21
02	01	Building Consent	27/06/21
03	25	RAB board change	15/11/21

KAIPARA DISTRICT

Kaipara te Oranganui • Two Oceans Two Harbours

KAIPARA DISTRICT COUNCIL

Producer Statement Construction (PS3) - Drainage

Issued by: Kevin Wood being a Registered Certifying Drainlayer

In respect of installing drainage and the on-site wastewater disposal for:

(Owner) _____

At (Address) 53 Robert Hastie Drive
Mangawhai

Legal Description: Lot 81 DP _____ Valuation _____

I have sighted the issued Building Consent (BC 210441) and have constructed the drainage system including the pipes and fittings in accordance with the approved Building Consent, the New Zealand Building Code, and the manufacturers specifications and requirements.

I have tested the pipework and installed the system as follows:

☑ Installed an on-site effluent disposal system in accordance with AS/NZS 1547:2000 and provide a schedule to the owner for the systems maintenance.

☑ Has been installed in accordance with G13 (Foul Water) and G14 (Industrial Liquid Waste) and B2 (durability 15 years) of the Building Regulations 1992.

I believe on reasonable grounds that the work complies with the Building Consent issued.

I also understand that Kaipara District Council in accepting this Producer Statement Construction (PS3), will be relying on it to establish compliance at the completion of the building work.

☑ I understand and accept that Council may rely on this document, for the purposes of establishing compliance with the above building consent and that the content including the signature, whether electronic or not, is truly representative and authoritative of the information contained.

Signature of Registered Certifying Drainlayer: Kevin Wood

[redacted] Registration Number: 14366 [redacted] Reg Expiry Date: 31-3-23

Date: 15-5-22

File: 3117.0

PS.CD
Version 1
Issued 1 March 2014

Electrical Certificate of Compliance & Electrical Safety Certificate

Reference/Certificate ID No.: 53115

This form has been designed to be used by licensed electrical workers to certify that installations or Part installations under Part 1 or Part 2 of AS/NZS 3000 are safe to be connected to the specified system of electrical supply

Location Details: 53 Robert Hastie Drive

Contact Details: (Name and address) Kendall

Name of Electrical Worker: Jason Brown

Registration/Practising license number: E19481

Organisation/company: Hotwired Electrical

Phone and email: 021 405 019

Name of person(s) supervised:

CoC

Type of work: ☐ Additions ☐ Alterations ☑ New work

The prescribed electrical work is: ☐ Low risk ☐ General ☑ High Risk (Specify): mains

Reference standards: ☐ Part 1 of AS/NZS 3000 ☐ Part 2 of AS/NZS 3000

☐ Additional Standards:

Description of Work (including date/s of work and type of supply system)

prewire & fit off 3ø house & meterbox.
earth peg located West side of house by pool shed.

I certify that the completed prescribed electrical work to which this Certificate of Compliance applies has been done lawfully and safely, and the information in the certificate is correct in that the installation, or part of the installation:

Select those that apply:

- ☐ Has been installed in accordance with the specified certified design[1]
- ☑ Has an earthing system that is correctly rated (where applicable)
- ☑ Contains fittings that are safe to connect to a power supply
- ☑ Relies on a supplier Declaration of Conformity[1]
- ☑ Relies on a manufacturer's instructions[1]
- ☑ Has been satisfactorily tested in accordance with the Electricity (Safety) Regulations 2010
- ☑ Is safe to connect

Test Results	
Polarity (Independent earth):	
Insulation resistance:	
Earth Continuity:	
Bonding:	
Fault Loop impedance:	
Other (specify):	

Electronic/Other reference: 53115

Certifier's signature:

Date: 11/5/22

1 Attach or reference. If it is impractical to attach a copy of a particular manufacturer's instructions, or of any certified design or supplier declaration of conformity, provide a reference to where the documents can be found, in a readily accessible format, by electronic means.

ESC

I certify that the installation, or part of the installation, to which this Electrical Safety Certificate applies is connected to a power supply and is safe to use.

Certifier's name: Jason Brown

Registration/Practising license number: E19481

Certifier's signature:

Certificate Issue Date: 11/5/22

Connection Date: 11/5/22

CUSTOMER COPY - THIS IS AN IMPORTANT DOCUMENT AND SHOULD BE RETAINED FOR A MINIMUM OF 7 YEARS

This certificate also confirms that the electrical work complies with the building code for the purposes of Section 19(1) (e) of the Building Act 2004

White - Customer Copy Blue - Inspectors Copy Yellow - Electricians Copy

JOP10566A

As built drainage plan

Building Consent number: BC210441

DETAILS

Owner:	Linda & David Kendall		
Mailing address:	53 Robert Hastie Drive Mangawhai	Postcode:	0573
Legal description of land where building is located:			
Lot number:	81	DP number:	556753
Drain-layer:	N/A - PVC Pipe Only	Registration number:	N/A
Date submitted:			

Note: Please provide figures/measurements from a defined point of reference.
Note: Use black ink for building outline. Denote stormwater as -------S/W------- and sanitary sewer as -------S/S-------

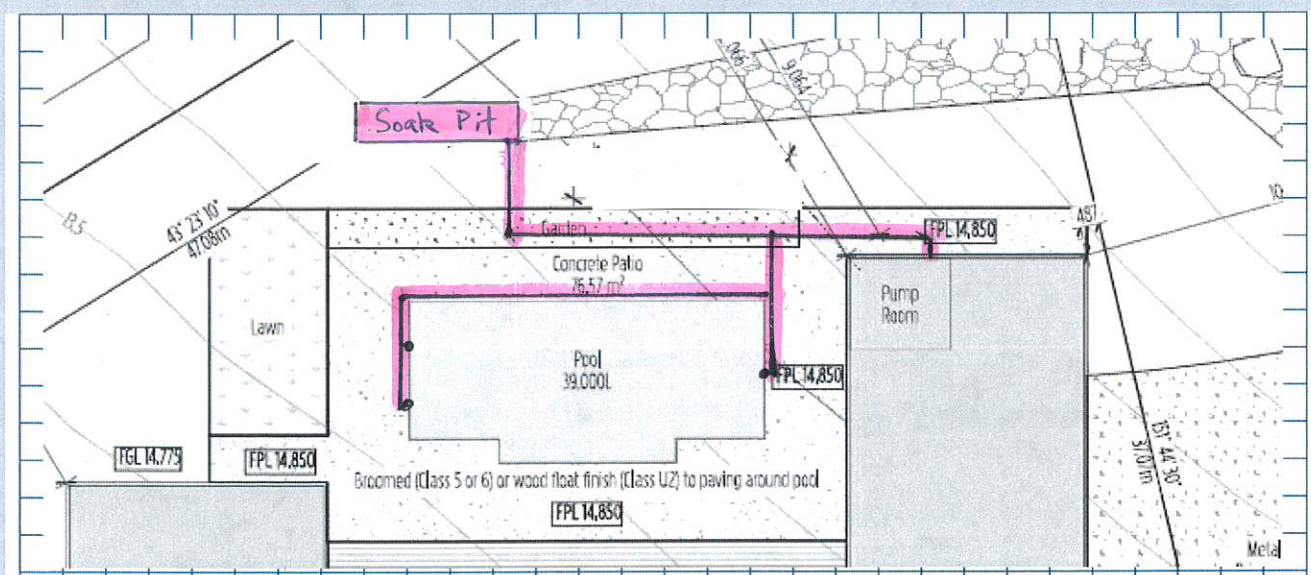

PRODUCER STATEMENT PS1

WANAKA GLASS POOL FENCING



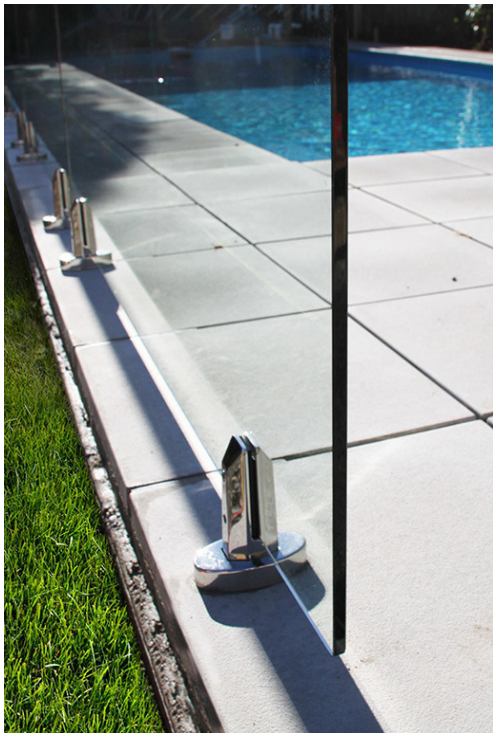

WARNER.

Fences • Path & driveway gates • Auto-gate openers • Balustrades

IPENZ ENGINEERS NEW ZEALAND | NEW ZEALAND INSTITUTE OF ARCHITECTS INCORPORATED | ACENZ

Building Code Clause(s) B1,B2,F2 ,F9

PRODUCER STATEMENT – PS1 – DESIGN

(Guidance notes on the use of this form are printed on page 2)

ISSUED BY: P&P CONSULTING ENGINEERS LIMITED
(Design Firm)

TO: WARNER FENCING & GATES LIMITED
(Owner/Developer)

TO BE SUPPLIED TO: RELEVANT COUNCIL
(Building Consent Authority)

IN RESPECT OF: SWIMMING POOL FENCE SUPPORTED BY WANAKA SPIGOTS
(Description of Building Work)

AT: VARIOUS SITES
(Address)

LOT ..... **DP** ..... **SO** .....

We have been engaged by the owner/developer referred to above to provide STRUCTURAL DESIGN services in respect of the requirements of
(Extent of Engagement)

Clause(s) B1, B2, F2 of the Building Code for
All ☐ or Part only ☑ (as specified in the attachment to this statement), of the proposed building work.

The design carried out by us has been prepared in accordance with:

☑ Compliance Documents issued by the Ministry of Business, Innovation & Employment B1/VM1 & GLASS TESTING or
(verification method / acceptable solution)

☐ Alternative solution as per the attached schedule

The proposed building work covered by this producer statement is described on the drawings titled WARNER FENCING & GATES and numbered REF: 13/243/ds & ENG 01;
together with the specification, and other documents set out in the schedule attached to this statement.

On behalf of the Design Firm, and subject to:

(i) Site verification of the following design assumptions REFER NOTES AT END OF DESIGN SUMMARY

(ii) All proprietary products meeting their performance specification requirements;

I **believe on reasonable grounds** that a) the building, if constructed in accordance with the drawings, specifications, and other documents provided or listed in the attached schedule, will comply with the relevant provisions of the Building Code and that b), the persons who have undertaken the design have the necessary competency to do so. I also recommend the following level of construction monitoring/observation:

☐CM1 ☐CM2 ☐CM3 ☐CM4 ☐CM5 (Engineering Categories) or ☐ as per agreement with owner/developer (Architectural)

I, MR. P PRAKASH am:
(Name of Design Professional)

☑CPEng 251801 #

☐Reg Arch ..... #

I am a Member of : ☑ IPENZ ☐NZIA and hold the following qualifications: B.E. (Civil), CPEng

The Design Firm issuing this statement holds a current policy of Professional Indemnity Insurance no less than $200,000*.

The Design Firm is a member of ACENZ: ☐

SIGNED BY MR. P PRAKASH ON BEHALF OF P&P CONSULTING ENGINEERS LTD
(Design Firm)

Date 13/10/2021 (signature)

Note: This statement shall only be relied upon by the Building Consent Authority named above. Liability under this statement accrues to the Design Firm only. The total maximum amount of damages payable arising from this statement and all other statements provided to the Building Consent Authority in relation to this building work, whether in contract, tort or otherwise (including negligence), is limited to the sum of $200,000.*

This form is to accompany **Form 2 of the Building (Forms) Regulations 2004** for the application of a Building Consent.

THIS FORM AND ITS CONDITIONS ARE COPYRIGHT TO ACENZ, IPENZ AND NZIA

WARNER.

Fences • Path & driveway gates • Auto-gate openers • Balustrades

FRAMELESS GLASS SWIMMING POOL FENCE SUPPORTED BY WANAKA SPIGOTS

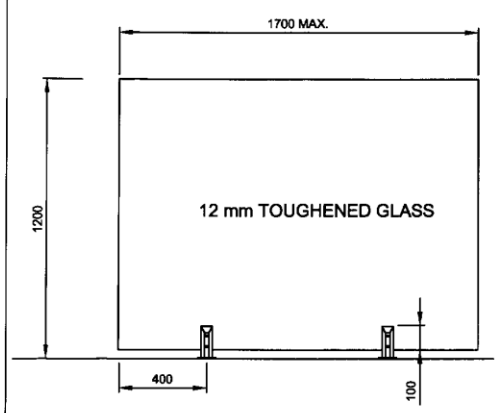

MEDIUM WIND ZONE

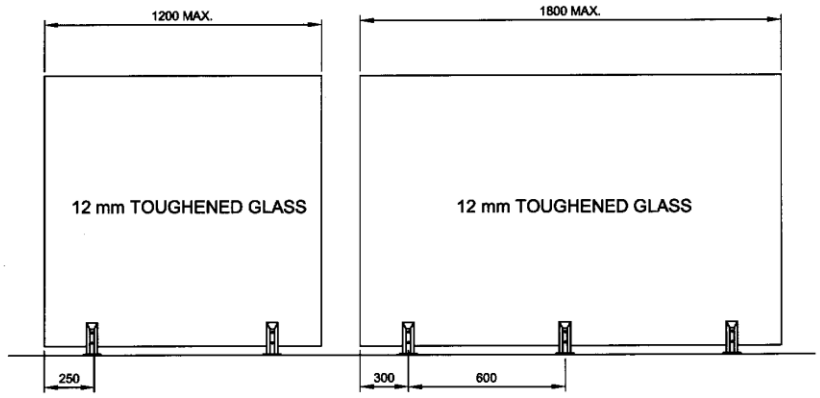

HIGH WIND ZONE

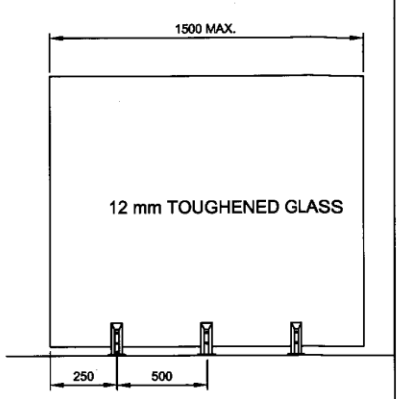

VERY HIGH WIND ZONE

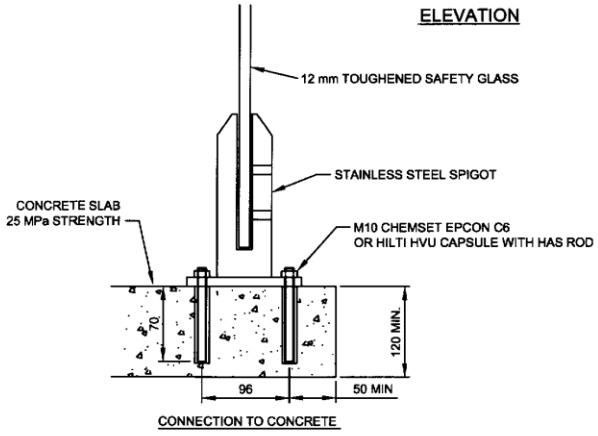

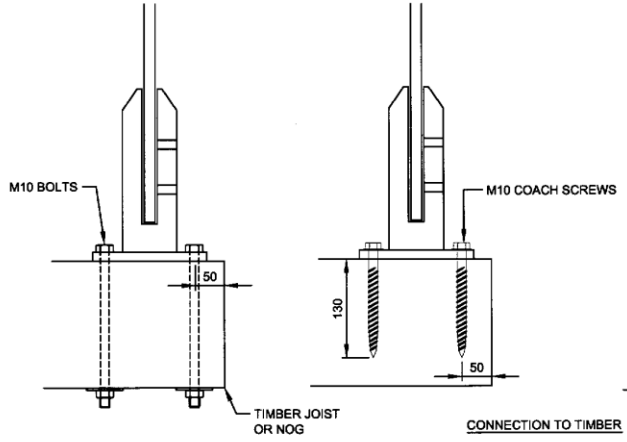

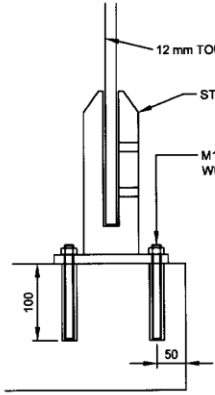

NOTES:

FIXINGS:
1. ALL ANCHORS MUST BE INSTALLED IN ACCORDANCE WITH MANUFACTURERS REQUIREMENTS.
2. BOLTING ARRANGEMENT MUST COMPLY WITH RELEVANT MATERIAL CODES.
3. STRENGTH & STIFFNESS OF THE SUBSTRATE STRUCTURE MUST BE SUFFICIENT FOR THE LOADS - THIS MUST BE SPECIFICALY CHECKED BY OTHERS FOR EACH SITUATION.
4. ALL FIXINGS TO BE STAINLESS STEEL.

P & P CONSULTING ENGINEERS LTD Civil and Structural Engineering 6A Montel Avenue, Henderson ph: 836-1853	WARNER FENCING & GATES LTD	Scales N.T.S	Project 13/243
	GLASS FENCE SUPPORTED BY STAINLESS STEEL SPIGOTS	Drawn PP / Date 6-3-14	Sheet ENG 01

WARNER.

Fences • Path & driveway gates • Auto-gate openers • Balustrades

2A

WARNER.

Fences • Path & driveway gates • Auto-gate openers • Balustrades

Maximun glass spans and spigot requirements for the Wanaka spigot

Glass Height	Glass Width	Windzones		
		Medium 32-37 M/S	High 37-44 M/S	Very High - 44-50 M/S
1160	1000	2 Spigots	2 Spigots	2 Spigots
1160	1050	2 Spigots	2 Spigots	2 Spigots
1160	1100	2 Spigots	2 Spigots	2 Spigots
1160	1150	2 Spigots	2 Spigots	2 Spigots
1160	1200	2 Spigots	2 Spigots	2 Spigots
1160	1250	2 Spigots	2 Spigots	2 Spigots
1160	1300	2 Spigots	2 Spigots	2 Spigots
1160	1350	2 Spigots	2 Spigots	3 Spigots
1160	1400	2 Spigots	2 Spigots	3 Spigots
1160	1450	2 Spigots	2 Spigots	3 Spigots
1160	1500	2 Spigots	2 Spigots	3 Spigots
1160	1550	2 Spigots	2 Spigots	3 Spigots
1160	1600	2 Spigots	2 Spigots	3 Spigots
1160	1650	2 Spigots	2 Spigots	3 Spigots
1160	1700	2 Spigots	2 Spigots	3 Spigots
1160	1750	2 Spigots	3 Spigots	3 Spigots
1160	1800	2 Spigots	3 Spigots	3 Spigots
1160	1850	2 Spigots	3 Spigots	3 Spigots
1160	1950	2 Spigots	3 Spigots	3 Spigots
1160	2000	2 Spigots	3 Spigots	3 Spigots

WARNER.

Fences • Path & driveway gates • Auto-gate openers • Balustrades

AZUMA Design

NATA WORLD RECOGNISED ACCREDITATION

NATA Accredited Laboratory No: 15147

HINGE TEST REPORT

Model No. / Name: Magna Close Safety Hinge

AZT Number: AZT0113.09

Customer: Glass FX Frameless Glass Solutions

Date of Test: 14th July 2009 – 21st July 2009

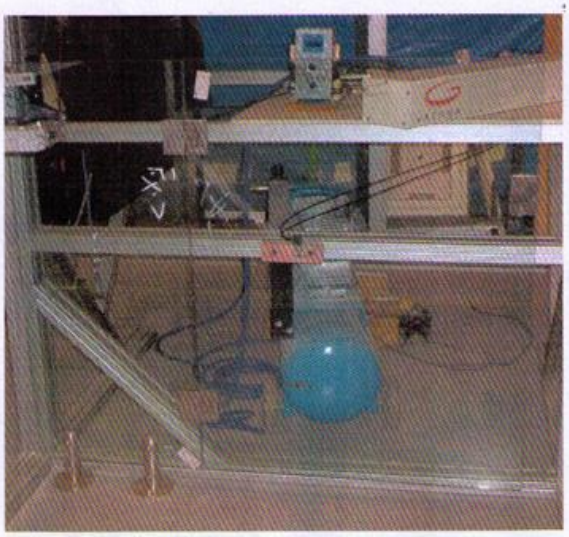

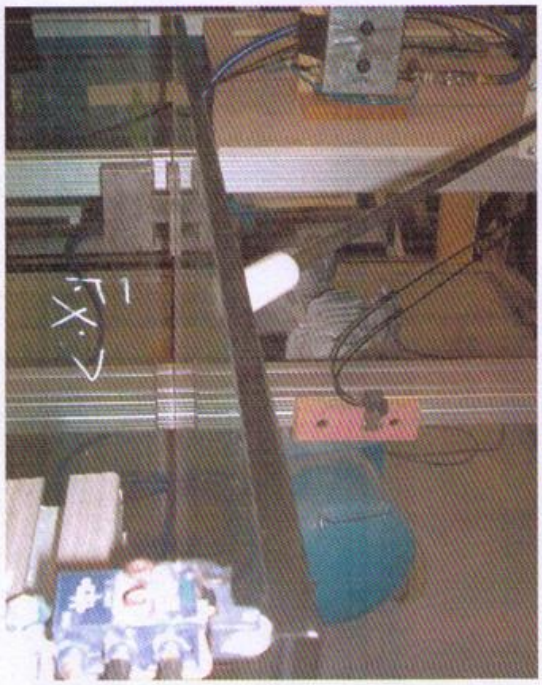

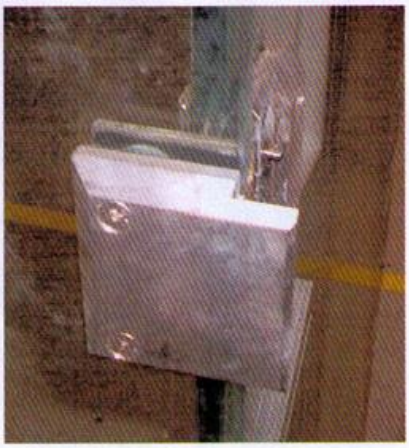



Address: 160 Newton Rd Wetherill Park NSW 2164 Australia **PH**: 61(02)9604 0255 **FAX**: 61(02)9604 0466

WARNER.
Fences • Path & driveway gates • Auto-gate openers • Balustrades

Latch

Applicable Standard: AS 1926.1 Clause 2.4.2
Test Method: Visual and dimensional and Figure 2.9

COMPLIES

Test requirement	Observation
The following is applicable when the gate is installed to the manufacturer's instructions and requirements.	
2.4.2.1 General Gates shall be fitted with a latch that will automatically operate on the closing of the gate and will prevent the gate from being re-opened without being manually released. The gate shall not be able to be:	The latch prevented the gate from being re-opened without being manually released.
Inadvertently adjusted during operation	Cannot be adjusted
Locked in the "open " position	Cannot be locked open
Adjusted without the use of tools	Not adjustable without use of tools
A latch shall not be able to be released by insertion of any implement in the 10mm opening shown in Figure 2.9	Cannot be opened through insertion of an implement through the opening.
2.4.2.2 Location Where the release point of the latch is located at a height less than 1500mm above the finished ground level, the location of the latch shall:	
Not be on the outside of the barrier	Latch is located on the inside of the barrier when installed in accordance with the manufacturer's installation instructions.
Be in such a position that to release the latch from the outside it will be necessary to reach over or through the barrier at a height of not less than 1200mm above the finished ground level or not less than 1000mm above the highest lower horizontal member.	Height is 1200mm above the finished ground when installed in accordance with the manufacturer's installation instructions.
Be at least 150mm below the top of the barrier if a hand-hole is not provided, or at least 150 mm below the edge of any hand-hole if provided.	No hand hole is provided
2.4.2.3 Shielding of the latch In a gate with vertical openings greater than 10mm, where the latch is located at a height less than 1500 mm above the finished ground level, the latch release shall be shielded so that no opening greater than 10mm occurs within the bounded area as shown in Figure 2.9	The vertical opening is less than 10mm

94 Vickery Street, Te Rapa, Hamilton 3200 | p 07 850 9093 | f 07 850 9026 | m 027 509 8425
waikato@warnerfences.co.nz | www.warnerfences.co.nz

WARNER.

Fences • Path & driveway gates • Auto-gate openers • Balustrades

Product Tested

Manufacturer:	Glass Outlet
Brand:	Master Range
Model Nos:	Not provided
Model Name:	Master Range Glass Gate Installation Kit
Description:	Master Range Inline & Hinges with 8mm thick 890mmW x 1200mmH glass gate fitted with D&D side pull latch kit.

Queensland Testing Laboratory Pty Ltd — Test Report: 132647 3248

Component Description

Sample Number	Description	Photo / Product / Component
3427	Side pull glass gate latch kit	

WARNER.

Fences • Path & driveway gates • Auto-gate openers • Balustrades

CODE: 12NPG-0800
DESCRIPTION: 12mm Polaris Glass Gate, 800 x 1160mm

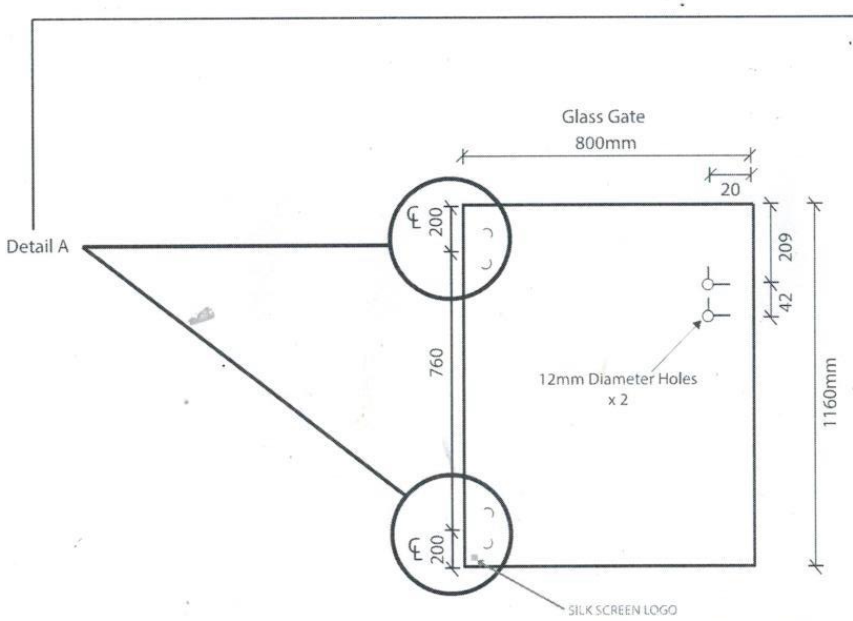

Not To Scale

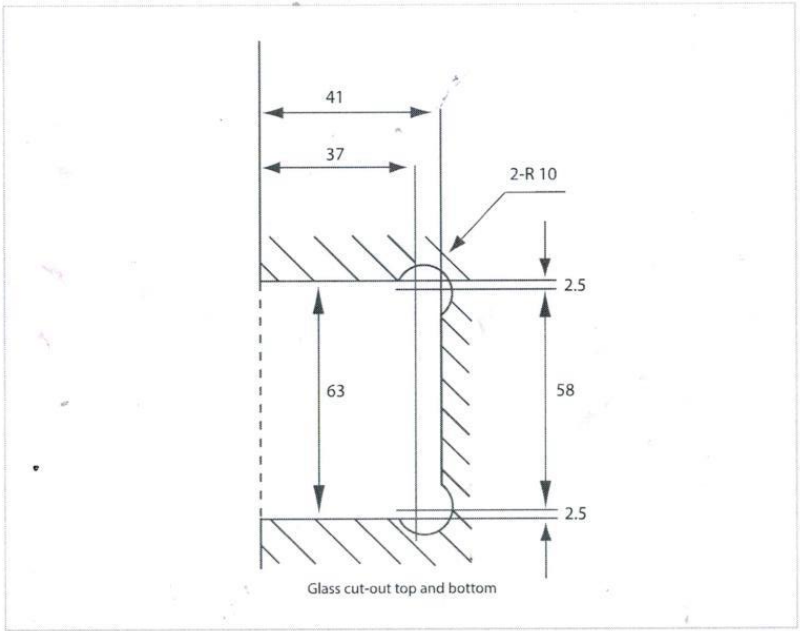

Detail A

Not To Scale

Glass Gate Specification:

- 12mm Thick Clear Toughened Glass
- 12mm Diameter Holes x 2
- 5mm Radius Corners
- 2 x Cut Outs As Per Detail A
- Flat Polish All Sides
- ℄ - Centre Line

Date Submitted: Thursday, 19 May 2022

Form 6
Application for code compliance certificate

Section 92, Building Act 2004

The building consent

Building consent number:	BC210441
Issued by:	Kaipara District Council

Agent

Name of agent:	Lance Vale
Contact person:	
Mailing address:	0 0
Street address/registered office:	
Phone number:	Landline: 021525659
Daytime:	Landline: 021525659
After hours:	Landline: 021525659
Facsimile number:	No information provided
Email address:	lance@coastalhomesnz.com
Website:	No information provided
Relationship to owner:	Application made on owners behalf

First point of contact for communications with the building consent authority:

Full name:	Lance Vale
Mailing address:	0 0
Phone number(s):	021525659
Facsimile number(s):	N/A
Email address(es):	lance@coastalhomesnz.com

Application

All building work to be carried out under the building consent specified on this form was completed on:
23 May 2022

The licensed building practitioner(s) who carried out or supervised the restricted building work is/are as follows:

Name	Marc Vale
Licensing class	Design
Licensed building practitioner number (or registration number if treated as being licensed under section 291 of Act)	BP134199
Particular work carried out or supervised	Design

The personnel who carried out building work other than restricted building work are as follows:

Name	Paul Massey
Address	No information provided
Phone number	021728501
Registration number	N/A
Licensed building practitioner number	N/A

Name	Jason Wright
Address	RD 2, Kaiwaka, 0573
Phone number	021975279
Registration number	BP126479
Licensed building practitioner number	N/A

Name	Rhys Bright
Address	No information provided
Phone number	02102358569
Registration number	N/A
Licensed building practitioner number	N/A

Name	Clark Smith
Address	No information provided
Phone number	021552196
Registration number	N/A
Licensed building practitioner number	N/A

Name	Glen
Address	No information provided
Phone number	0272830141
Registration number	N/A
Licensed building practitioner number	N/A

Name	Mark Maelzer
Address	No information provided
Phone number	0273104848
Registration number	N/A
Licensed building practitioner number	N/A

Name	Kirran Dheda
Address	No information provided
Phone number	0210395060
Registration number	N/A

Licensed building practitioner number N/A

The following specified systems are contained on the compliance schedule for the building and, in the opinion of the personnel who installed them, are capable of performing to the performance standards set out in the building consent:

There are no specified systems in the building.

I request that you issue a code compliance certificate for this work under section 95 of the Building Act 2004.
The code compliance certificate should be sent to:
Agent: 0 0
Signature of agent on behalf of and with the authority of the owner:
LANCE VALE

Name of person signing: Lance Vale
Date: 19 May 2022

Attachments

The following documents are attached to this application:
No attachments

Form 7
Code compliance certificate

Section 95, Building Act 2004

The building

Street address of building:	53 Robert Hastie Drive, Mangawhai
Legal description of land where building is located:	Lot 81 DP 556753
Building name:	N/A
Location of building within site/block number:	53 Robert Hastie Drive Mangawhai
Level/unit number:	0
Current, lawfully established, use:	2.0 Housing: 2.0.2 Detached Dwelling with 4 occupants
Year first constructed:	2021

The owner

Name of owner:	ACDL Trustee Limited
Contact person:	Lance Kendall
Mailing address:	17 Pinefield Road, Whenuapai, Auckland
Street address/registered office:	N/A
Phone number:	Landline: N/A Mobile: 02102210567
Daytime:	Landline: N/A Mobile: 02102210567
After hours:	Landline: N/A Mobile: 02102210567
Facsimile number:	No information provided
Email address:	linda.kendall@xtra.co.nz
Website:	No information provided

First point of contact for communications with the council/building consent authority:
Lisa Fletcher ; Mailing Address: 14 Fallow Street
Queenstown 9300; Mobile: 02102210567; Email: lisa@c3bc.co.nz

Building work

Building consent number:	BC210441
Description:	New Single Storey 4 Bedroom Dwelling with Attached Double Garage and Swimming Pool
Issued by:	Kaipara District Council

Code compliance

The building consent authority named below is satisfied, on reasonable grounds, that -
the building work complies with the building consent.

Signature: John Edwards
Position: building control officer
On behalf of: Kaipara District Council
Date: 05 August 2022

Email #49906: BC210441

Project ID: 210441
Date Received: 2021-06-30 19:55:05
Sender: lisa@c3bc.co.nz
Checked By: Fay Fergus
Accepted By: Fay Fergus
Subject:

Information Received Via Email: Fw: BC210441.1 Request For Further Information - Vetting - Robert Hastie Drive Mangawhai

Message:

Kia Ora,

Please see attached the RFI response to your vetting queries.

1. The invoice has been paid 03/06/21

1. Application Form as the property does not have a registered Council street number.

1. Plumbing & Drainage Detailing Please provide the following:
2. a. Owner Specification/Installation manual for the electric hot water cylinder (attached)
3. b. Storm water dispersal detail - water tank overflow (attached)

Please also see attached an application for Council street number/Rapid address of the property.

Thanks for your time.

Lisa Fletcher

Project Manager

[cid:480cd2fc-45cb-43da-bb66-ba945d3954c4]

[cid:bc8b6425-a43a-4016-9e75-38dead95a0f4] 021 0221 0567

[cid:60422f3f-1105-4d0b-b9a2-61cea4c3b7ad] lisa@c3bc.co.nz<mailto:lisa@c3bc.co.nz>
[cid:eff2d87b-73b0-4afc-a358-ab4f706244f4] https://www.c3bc.co.nz<https://www.c3bc.co.nz/>
[cid:fe564a0e-8047-4960-9050-dc1a610d4f88]
<https://www.facebook.com/C3-Building-Compliance-108260724384142>
[cid:5a59cfd3-423a-4f9c-acc2-3a4b73813f11] <https://www.linkedin.com/in/lisa-fletcher-18476a1a9/>
[cid:f9adadc2-70e9-469d-a3c1-d7eb0b6f8c1c] <https://www.linkedin.com/in/daniel-wetherill/>

Want to schedule a meeting.. click here for my availability HERE<https://calendly.com/c3bc>.

The information in this email and any attached files is confidential and/or legally privileged. It is intended solely for the use of the individual or entity to which it is addressed. Access to this email by anyone else is not authorised. Any distribution, disclosure, copying out or use of this communication by anyone else than the addressee is prohibited and may be unlawful. Should you receive this email by mistake please notify the sender immediately and then delete this email from your system. Whilst we have taken reasonable precautions to ensure that this e-mail and any attachment has been checked for viruses, we cannot guarantee that they are virus free and we cannot accept liability for any damage sustained as a result of software viruses. We would advise that you carry out your own virus checks, especially before opening an attachment

---

From: Kaipara District Council <210441@kdc.abcs.co.nz>
Sent: Wednesday, June 30, 2021 12:00 PM
To: Lisa Fletcher <lisa@c3bc.co.nz>
Subject: BC210441.1 Request For Further Information - Vetting - Robert Hastie Drive Mangawhai

Hello Lisa

Reference Number: BC210441
Project Location: Robert Hastie Drive, Mangawhai
Project Description: New Single Storey 4 Bedroom Dwelling with Attached Double Garage and Swimming Pool

Thank you for lodging your building consent application with the Kaipara District Council, the application has been reviewed for completeness in accordance with s45 of the Act. The attached letter details information which is required to be provided to enable your application to be formally receipted.

All information is to be supplied within 28 days (or the application may be refused). Please keep us informed if additional time is required.

So that your information gets to us as promptly as possible, please:

- ensure you reply directly to this email;
- only provide information specifically relating to this project;
- all attachments must be saved in PDF format;

By doing this you will keep your project moving as the information will be delivered directly to the processor. To speed up processing we would request that changes to plans are marked using the "cloud" convention - thank you for helping us to help you!

If you do not receive the automated reply confirmation from Kaipara District Council for the info sent then Kaipara District Council has not received your information.

Kind Regards

Fay Fergus
Building Technical Support
Kaipara District Council
Unit 6 - The Hub, 6 Molesworth Drive, Mangawhai 0505
P: (09) 439 3123 | E: buildingsupport@kaipara.govt.nz | W: www.kaipara.govt.nz

---

DISCLAIMER

This message is for the designated recipient(s) only, and may contain confidential and/or privileged information.
If you have received it in error, please delete it and advise the sender immediately.
You should not copy or use it for any other purpose, nor disclose its contents to any other person.

Designated Recipient(s): lisa@c3bc.co.nz

Sent From: AlphaOne Building Consent System

Sent Date: 30 June 2021 12:00 - Wednesday

ATTACHMENTS:

- Outlook-ox5vy2mh.png.pdf
- Outlook-stnhl5mx.png.pdf
- Outlook-etq4qo0q.png.pdf
- Outlook-kbj2jneb.png.pdf
- Outlook-1euhazjr.png.pdf
- Outlook-dunwmewk.png.pdf
- Outlook-by2fsivi.png.pdf
- PF Application Urban Number 201705.pdf
- Kendall - Lot 81 The Sanctuary - Amended Sheets 30.06.2021.pdf
- Kendall - Additional Manufacturer Docs.pdf

Email #49988: BC210441

Project ID: 210441
Date Received: 2021-07-03 11:10:02
Sender: lisa@c3bc.co.nz
Checked By: Fay Fergus
Accepted By: Fay Fergus
Subject:
Information Received Via Email: Fw: BC210441.1 Request For Further Information - Vetting - Robert Hastie Drive Mangawhai
Message:
Kia Ora,

Can you please confirm this has been Formally Received ?

Lisa Fletcher

Project Manager

[cid:93b82ddd-1e83-409c-b906-5a20ae760846]

[cid:cc05a47f-c8ff-4f8a-abeb-1ccb41ba4e0d] 021 0221 0567

[cid:c09affac-a4a3-4017-9f9d-027d4d8d7dee] lisa@c3bc.co.nz<mailto:lisa@c3bc.co.nz>
[cid:39987b4a-de9e-40e7-8a37-f386e7028060] https://www.c3bc.co.nz<https://www.c3bc.co.nz/>
[cid:ea10e7f0-6d2f-4186-81c7-dc9fd4125a41]
<https://www.facebook.com/C3-Building-Compliance-108260724384142>
[cid:2841f17c-e996-4d6b-a3c9-25a4330198a1] <https://www.linkedin.com/in/lisa-fletcher-18476a1a9/>
[cid:565bca65-5764-4632-8525-2868a9dc5dc7] <https://www.linkedin.com/in/daniel-wetherill/>

Want to schedule a meeting.. click here for my availability HERE<https://calendly.com/c3bc>.

The information in this email and any attached files is confidential and/or legally privileged. It is intended solely for the use of the individual or entity to which it is addressed. Access to this email by anyone else is not authorised. Any distribution, disclosure, copying out or use of this communication by anyone else than the addressee is prohibited and may be unlawful. Should you receive this email by mistake please notify the sender immediately and then delete this email from your system. Whilst we have taken reasonable precautions to ensure that this e-mail and any attachment has been checked for viruses, we cannot guarantee that they are virus free and we cannot accept liability for any damage sustained as a result of software viruses. We would advise that you carry out your own virus checks, especially before opening an attachment

---

From: Lisa Fletcher <lisa@c3bc.co.nz>
Sent: Wednesday, June 30, 2021 7:53 PM
To: council@kaipara.govt.nz <council@kaipara.govt.nz>; Kaipara District Council <210441@kdc.abcs.co.nz>
Subject: Fw: BC210441.1 Request For Further Information - Vetting - Robert Hastie Drive Mangawhai

Kia Ora,

Please see attached the RFI response to your vetting queries.

1. The invoice has been paid 03/06/21

1. Application Form as the property does not have a registered Council street number.

1. Plumbing & Drainage Detailing Please provide the following:
2. a. Owner Specification/Installation manual for the electric hot water cylinder (attached)
3. b. Storm water dispersal detail - water tank overflow (attached)

Please also see attached an application for Council street number/Rapid address of the property.

Thanks for your time.

Lisa Fletcher

Project Manager

[cid:87f02805-1c87-44d6-8f34-86124943dacb]

[cid:e1a2a4b5-9c80-4882-a96e-bf075149406b] 021 0221 0567

[cid:04685219-aa46-47e7-b704-d9d2ba126698] lisa@c3bc.co.nz<mailto:lisa@c3bc.co.nz>
[cid:c3f6a23d-7ccc-4c63-876e-ca456b306117] https://www.c3bc.co.nz<https://www.c3bc.co.nz/>
[cid:362a1aaf-0dc5-4237-b8fc-aae1b2f61a03]
<https://www.facebook.com/C3-Building-Compliance-108260724384142>
[cid:88d664d5-8ef1-467e-a491-860ccd34cc19] <https://www.linkedin.com/in/lisa-fletcher-18476a1a9/>
[cid:2549c8f1-621d-44e7-806a-978820e191cd] <https://www.linkedin.com/in/daniel-wetherill/>

Want to schedule a meeting.. click here for my availability HERE<https://calendly.com/c3bc>.

The information in this email and any attached files is confidential and/or legally privileged. It is intended solely for the use of the individual or entity to which it is addressed. Access to this email by anyone else is not authorised. Any distribution, disclosure, copying out or use of this communication by anyone else than the addressee is prohibited and may be unlawful. Should you receive this email by mistake please notify the sender immediately and then delete this email from your system. Whilst we have taken reasonable precautions to ensure that this e-mail and any attachment has been checked for viruses, we cannot guarantee that they are virus free and we cannot accept liability

for any damage sustained as a result of software viruses. We would advise that you carry out your own virus checks, especially before opening an attachment

---

From: Kaipara District Council <210441@kdc.abcs.co.nz>
Sent: Wednesday, June 30, 2021 12:00 PM
To: Lisa Fletcher <lisa@c3bc.co.nz>
Subject: BC210441.1 Request For Further Information - Vetting - Robert Hastie Drive Mangawhai

Hello Lisa

Reference Number: BC210441
Project Location: Robert Hastie Drive, Mangawhai
Project Description: New Single Storey 4 Bedroom Dwelling with Attached Double Garage and Swimming Pool

Thank you for lodging your building consent application with the Kaipara District Council, the application has been reviewed for completeness in accordance with s45 of the Act. The attached letter details information which is required to be provided to enable your application to be formally receipted.

All information is to be supplied within 28 days (or the application may be refused). Please keep us informed if additional time is required.

So that your information gets to us as promptly as possible, please:

- ensure you reply directly to this email;
- only provide information specifically relating to this project;
- all attachments must be saved in PDF format;

By doing this you will keep your project moving as the information will be delivered directly to the processor. To speed up processing we would request that changes to plans are marked using the "cloud" convention - thank you for helping us to help you!

If you do not receive the automated reply confirmation from Kaipara District Council for the info sent then Kaipara District Council has not received your information.

Kind Regards

Fay Fergus
Building Technical Support
Kaipara District Council
Unit 6 - The Hub, 6 Molesworth Drive, Mangawhai 0505
P: (09) 439 3123 | E: buildingsupport@kaipara.govt.nz | W: www.kaipara.govt.nz

---

DISCLAIMER

This message is for the designated recipient(s) only, and may contain confidential and/or privileged information.
If you have received it in error, please delete it and advise the sender immediately.
You should not copy or use it for any other purpose, nor disclose its contents to any other person.

Designated Recipient(s): lisa@c3bc.co.nz

Sent From: AlphaOne Building Consent System

Sent Date: 30 June 2021 12:00 - Wednesday

ATTACHMENTS:

- Outlook-g3o4uyto.png.pdf
- Outlook-ejavidal.png.pdf
- Outlook-tl32cpyz.png.pdf
- Outlook-p5l5bsuy.png.pdf
- Outlook-sqey0jno.png.pdf
- Outlook-row4myso.png.pdf
- Outlook-ktqwcgwa.png.pdf
- Outlook-pfylsufl.png.pdf
- Outlook-sbx2huxp.png.pdf
- Outlook-jrd3j3f5.png.pdf
- Outlook-lhv2rure.png.pdf
- Outlook-o3c4g2lw.png.pdf
- Outlook-vmlswchy.png.pdf
- Outlook-2urvfbnj.png.pdf
- PF Application Urban Number 201705.pdf
- Kendall - Lot 81 The Sanctuary - Amended Sheets 30.06.2021.pdf
- Kendall - Additional Manufacturer Docs.pdf

Email #50198: BC210441

Project ID: 210441
Date Received: 2021-07-09 16:05:09
Sender: lisa@c3bc.co.nz
Checked By: Matthew Bayly
Accepted By: Matthew Bayly
Subject:
Information Received Via Email: Fw: BC210441.1 Request For Further Information - RMA - Robert Hastie Drive Mangawhai
Message:
Good afternoon,

Please find attached landscape plan. This was approved by the Sanctuary committee satisfying clause 1 (xii) and (xv) - see attached email and letter

Demonstrating compliance with clause 1(iii) of consent notice 12012486.3 by providing an addendum compliance assessment supported by a suitably qualified and experienced landscape architect. The support landscape architect statement should also include comment on clauses 1 xiii and xiv, Please demonstrate compliance with clause 1(xii) and (xv).

Lisa Fletcher

Project Manager

[cid:9f2cf6b9-6b25-40ef-ab9d-98f4bd0b3e05]

[cid:424bfed5-1d61-4e6e-b77e-9ca1d35fe362] 021 0221 0567

[cid:0d77ebb6-cfd9-418b-8166-ecb054d86af7] lisa@c3bc.co.nz<mailto:lisa@c3bc.co.nz>
[cid:9cfd8d5c-6a1b-476a-985d-cea33469cb9a] https://www.c3bc.co.nz<https://www.c3bc.co.nz/>
[cid:d03d561a-ea77-4602-acb5-78114f381044]
<https://www.facebook.com/C3-Building-Compliance-108260724384142>
[cid:4e719e36-aaf9-40a9-90fe-63a66320b871] <https://www.linkedin.com/in/lisa-fletcher-18476a1a9/>
[cid:43c8c34a-80d0-403c-93ed-3f4ce6f4483d] <https://www.linkedin.com/in/daniel-wetherill/>

Want to schedule a meeting.. click here for my availability HERE<https://calendly.com/c3bc>.

The information in this email and any attached files is confidential and/or legally privileged. It is intended solely for the use of the individual or entity to which it is addressed. Access to this email by anyone else is not authorised. Any distribution, disclosure, copying out or use of this communication by anyone else than the addressee is prohibited and may be unlawful. Should you receive this email by mistake please notify the sender immediately and then delete

this email from your system. Whilst we have taken reasonable precautions to ensure that this e-mail and any attachment has been checked for viruses, we cannot guarantee that they are virus free and we cannot accept liability for any damage sustained as a result of software viruses. We would advise that you carry out your own virus checks, especially before opening an attachment

---

From: Kaipara District Council <210441@kdc.abcs.co.nz>
Sent: Thursday, July 8, 2021 4:10 PM
To: Lisa Fletcher <lisa@c3bc.co.nz>
Subject: BC210441.1 Request For Further Information - RMA - Robert Hastie Drive Mangawhai

Hi,

Please see attached a Request for Further Information (RFI) for this project. This RFI is regarding compliance with consent notices, no breaches of the District Plan were identified.

Reference Number: BC210441
Project Location: Robert Hastie Drive, Mangawhai
Project Description: New Single Storey 4 Bedroom Dwelling with Attached Double Garage and Swimming Pool

Processing of your PIM / Building Consent application is currently in progress. The attached letter details information which is required to be provided to demonstrate that the proposed work will comply with the NZ Building Code / Resource Management / District Scheme provisions.

So that your information gets to us as promptly as possible, please:

- ensure you reply directly to this email;
- only provide information specifically relating to this project;
- all attachments must be saved in PDF format;

By doing this you will keep your project moving as the information will be delivered directly to the processor - thank you for helping us to help you!

Matthew Bayly
Planning Team
Kaipara District Council
Unit 6 - The Hub, 6 Molesworth Drive, Mangawhai 0505
P: (09) 439 3123 | E: buildingsupport@kaipara.govt.nz | W: www.kaipara.govt.nz

---

DISCLAIMER

This message is for the designated recipient(s) only, and may contain confidential and/or privileged information.
If you have received it in error, please delete it and advise the sender immediately.
You should not copy or use it for any other purpose, nor disclose its contents to any other person.

Designated Recipient(s): lisa@c3bc.co.nz

Sent From: AlphaOne Building Consent System

Sent Date: 8 July 2021 16:10 - Thursday

ATTACHMENTS:

- Outlook-5dfiqcgg.png.pdf
- Outlook-3m5y4qmn.png.pdf
- Outlook-0hs5zdz0.png.pdf
- Outlook-yt11ro1y.png.pdf
- Outlook-xlpx0uyo.png.pdf
- Outlook-xcnyz3tl.png.pdf
- Outlook-5he4ljzz.png.pdf
- Kendall Landscaping - Lot 81 The Sanctuary 95.pdf
- The Sanctuary Design Committee Approval Form Lot 81 KENDALL78.pdf
- Committe Approval Email.pdf

Email #50231: BC210441

Project ID: 210441
Date Received: 2021-07-12 16:10:04
Sender: lisa@c3bc.co.nz
Checked By: Matthew Bayly
Accepted By: Matthew Bayly
Subject:
Information Received Via Email: Re: BC210441: Robert Hastie Drive Mangawhai
Message:
HI Matthew,

Apologies, these are now attached.

Lisa Fletcher

Project Manager

[cid:ba03ce84-fc77-48ef-bad5-c8257edb1c3d]

[cid:3ff5b76f-0ca8-40dc-b9ee-cb8f7d6f54ce] 021 0221 0567

[cid:558d65c0-9b76-47d5-8b46-a2c40ca13bcc] lisa@c3bc.co.nz<mailto:lisa@c3bc.co.nz>
[cid:1a66ec2b-b692-4fba-86a1-6fed3ef962ab] https://www.c3bc.co.nz<https://www.c3bc.co.nz/>
[cid:9ed96a8b-a512-482e-9519-5465e1fc79b3]
<https://www.facebook.com/C3-Building-Compliance-108260724384142>
[cid:87a626bc-1c81-42b6-ae7d-c848dc851f18] <https://www.linkedin.com/in/lisa-fletcher-18476a1a9/>
[cid:1087008d-794b-4c81-80ec-71ebcca2ddef] <https://www.linkedin.com/in/daniel-wetherill/>

Want to schedule a meeting.. click here for my availability HERE<https://calendly.com/c3bc>.

The information in this email and any attached files is confidential and/or legally privileged. It is intended solely for the use of the individual or entity to which it is addressed. Access to this email by anyone else is not authorised. Any distribution, disclosure, copying out or use of this communication by anyone else than the addressee is prohibited and may be unlawful. Should you receive this email by mistake please notify the sender immediately and then delete this email from your system. Whilst we have taken reasonable precautions to ensure that this e-mail and any attachment has been checked for viruses, we cannot guarantee that they are virus free and we cannot accept liability for any damage sustained as a result of software viruses. We would advise that you carry out your own virus checks, especially before opening an attachment

---

From: Kaipara District Council <210441@kdc.abcs.co.nz>

Sent: Monday, July 12, 2021 3:39 PM
To: Lisa Fletcher <lisa@c3bc.co.nz>
Subject: BC210441: Robert Hastie Drive Mangawhai

Hi,

Thanks for the landscape plan, have added it to file. I still need evidence of compliance with clauses 1(xii) and (xv) as the committee are not the consent authority in regard to this notice.

Please can you provide an amended plan showing firefighting water supply included and the engineers (presumably) Wiley Geotechnical stormwater design.

Matthew Bayly
Planning Team
Kaipara District Council
Unit 6 - The Hub, 6 Molesworth Drive, Mangawhai 0505
P: (09) 439 3123 | E: buildingsupport@kaipara.govt.nz | W: www.kaipara.govt.nz

==========
Good afternoon,

Please find attached landscape plan. This was approved by the Sanctuary committee satisfying clause 1 (xii) and (xv) aEURO" see attached email and letter

Demonstrating compliance with clause 1(iii) of consent notice 12012486.3 by providing an addendum compliance assessment supported by a suitably qualified and experienced landscape architect. The support landscape architect statement should also include comment on clauses 1 xiii and xiv, Please demonstrate compliance with clause 1(xii) and (xv).

Lisa Fletcher

Project Manager

[cid:9f2cf6b9-6b25-40ef-ab9d-98f4bd0b3e05]

[cid:424bfed5-1d61-4e6e-b77e-9ca1d35fe362] 021 0221 0567

[cid:0d77ebb6-cfd9-418b-8166-ecb054d86af7] lisa@c3bc.co.nz
[cid:9cfd8d5c-6a1b-476a-985d-cea33469cb9a] https://www.c3bc.co.nz
[cid:d03d561a-ea77-4602-acb5-78114f381044] [cid:4e719e36-aaf9-40a9-90fe-63a66320b871]
[cid:43c8c34a-80d0-403c-93ed-3f4ce6f4483d]

Want to schedule a meeting.. click here for my availability HERE.

The information in this email and any attached files is confidential and/or legally privileged. It is intended solely for the use of the individual or entity to which it is addressed. Access to this email by anyone else is not authorised. Any distribution, disclosure, copying out or use of this communication by anyone else than the addressee is prohibited and may be unlawful. Should you receive this email by mistake please notify the sender immediately and then delete this email from your system. Whilst we have taken reasonable precautions to ensure that this e-mail and any attachment has been checked for viruses, we cannot guarantee that they are virus free and we cannot accept liability for any damage sustained as a result of software viruses. We would advise that you carry out your own virus checks, especially before opening an attachment

---

From: Kaipara District Council
Sent: Thursday, July 8, 2021 4:10 PM
To: Lisa Fletcher
Subject: BC210441.1 Request For Further Information - RMA - Robert Hastie Drive Mangawhai

Hi,

Please see attached a Request for Further Information (RFI) for this project. This RFI is regarding compliance with consent notices, no breaches of the District Plan were identified.

Reference Number: BC210441
Project Location: Robert Hastie Drive, Mangawhai
Project Description: New Single Storey 4 Bedroom Dwelling with Attached Double Garage and Swimming Pool

Processing of your PIM / Building Consent application is currently in progress. The attached letter details information which is required to be provided to demonstrate that the proposed work will comply with the NZ Building Code / Resource Management / District Scheme provisions.

So that your information gets to us as promptly as possible, please:

- ensure you reply directly to this email;
- only provide information specifically relating to this project;
- all attachments must be saved in PDF format;

By doing this you will keep your project moving as the information will be delivered directly to the processor - thank you for helping us to help you!

Matthew Bayly
Planning Team
Kaipara District Council
Unit 6 - The Hub, 6 Molesworth Drive, Mangawhai 0505
P: (09) 439 3123 | E: buildingsupport@kaipara.govt.nz | W: www.kaipara.govt.nz

---

DISCLAIMER

This message is for the designated recipient(s) only, and may contain confidential and/or privileged information.
If you have received it in error, please delete it and advise the sender immediately.
You should not copy or use it for any other purpose, nor disclose its contents to any other person.

Designated Recipient(s): lisa@c3bc.co.nz

Sent From: AlphaOne Building Consent System

Sent Date: 8 July 2021 16:10 - Thursday

DISCLAIMER
This message is for the designated recipient(s) only, and may contain confidential and/or privileged information. If you have received it in error, please delete it and advise the sender immediately. You should not copy or use it for any other purpose, nor disclose its contents to any other person.

Designated Recipient(s): lisa@c3bc.co.nz
Sent From: AlphaOne Building Consent System
Sent Date: 12 July 2021 15:39:38 pm - Monday

ATTACHMENTS:

- Outlook-nn42c0pd.png.pdf
- Outlook-sktdhad1.png.pdf
- Outlook-fs2jl3ek.png.pdf
- Outlook-s5gfa4zm.png.pdf
- Outlook-in0av0sg.png.pdf
- Outlook-2jjaepfp.png.pdf
- Outlook-3xboe4rq.png.pdf
- Kendall - Lot 81 The Sanctuary - Amended Sheets 12.07.2021.pdf
- Kendall - On-site wastewater.pdf

Email #50280: BC210441

Project ID: 210441
Date Received: 2021-07-13 15:00:16
Sender: lisa@c3bc.co.nz
Checked By: Matthew Bayly
Accepted By: Matthew Bayly
Subject:
Information Received Via Email: Re: BC210441: Robert Hastie Drive Mangawhai
Message:
Heya,

Is this the one you mean ?

Lisa Fletcher

Project Manager

[cid:00f83c1f-97b1-468b-9f8d-dbf97e30ab50]

[cid:6651ed6a-b645-471e-886f-f7338bab9020] 021 0221 0567

[cid:2dc7a20c-048f-4400-947f-7e927bafea91] lisa@c3bc.co.nz<mailto:lisa@c3bc.co.nz>
[cid:1ed22f54-e694-4944-b015-97f0a899122d] https://www.c3bc.co.nz<https://www.c3bc.co.nz/>
[cid:512d6fb3-a405-46bf-9301-5a999e4436a1]
<https://www.facebook.com/C3-Building-Compliance-108260724384142>
[cid:bcae433b-58cc-4a8e-91e9-efc88b3deccf] <https://www.linkedin.com/in/lisa-fletcher-18476a1a9/>
[cid:bce72862-a715-46a8-a511-91de12b98596] <https://www.linkedin.com/in/daniel-wetherill/>

Want to schedule a meeting.. click here for my availability HERE<https://calendly.com/c3bc>.

The information in this email and any attached files is confidential and/or legally privileged. It is intended solely for the use of the individual or entity to which it is addressed. Access to this email by anyone else is not authorised. Any distribution, disclosure, copying out or use of this communication by anyone else than the addressee is prohibited and may be unlawful. Should you receive this email by mistake please notify the sender immediately and then delete this email from your system. Whilst we have taken reasonable precautions to ensure that this e-mail and any attachment has been checked for viruses, we cannot guarantee that they are virus free and we cannot accept liability for any damage sustained as a result of software viruses. We would advise that you carry out your own virus checks, especially before opening an attachment

---

From: Kaipara District Council <210441@kdc.abcs.co.nz>

Sent: Tuesday, July 13, 2021 11:26 AM
To: Lisa Fletcher <lisa@c3bc.co.nz>
Subject: BC210441: Robert Hastie Drive Mangawhai

Thanks,

I have added the plan showing the firefighting water to the file, I don't see any stormwater specifications in the wastewater report. Am i missing something?

Matthew Bayly
Planning Team
Kaipara District Council
Unit 6 - The Hub, 6 Molesworth Drive, Mangawhai 0505
P: (09) 439 3123 | E: buildingsupport@kaipara.govt.nz | W: www.kaipara.govt.nz

==========

HI Matthew,

Apologies, these are now attached.

Lisa Fletcher

Project Manager

[cid:ba03ce84-fc77-48ef-bad5-c8257edb1c3d]

[cid:3ff5b76f-0ca8-40dc-b9ee-cb8f7d6f54ce] 021 0221 0567

[cid:558d65c0-9b76-47d5-8b46-a2c40ca13bcc] lisa@c3bc.co.nz
[cid:1a66ec2b-b692-4fba-86a1-6fed3ef962ab] https://www.c3bc.co.nz
[cid:9ed96a8b-a512-482e-9519-5465e1fc79b3] [cid:87a626bc-1c81-42b6-ae7d-c848dc851f18]
[cid:1087008d-794b-4c81-80ec-71ebcca2ddef]

Want to schedule a meeting.. click here for my availability HERE.

The information in this email and any attached files is confidential and/or legally privileged. It is intended solely for the use of the individual or entity to which it is addressed. Access to this email by anyone else is not authorised. Any distribution, disclosure, copying out or use of this communication by anyone else than the addressee is prohibited and may be unlawful. Should you receive this email by mistake please notify the sender immediately and then delete this email from your system. Whilst we have taken reasonable precautions to ensure that this e-mail and any attachment has been checked for viruses, we cannot guarantee that they are virus free and we cannot accept liability for any damage sustained as a result of software viruses. We would advise that you carry out your own virus checks, especially before opening an attachment

---

From: Kaipara District Council
Sent: Monday, July 12, 2021 3:39 PM
To: Lisa Fletcher
Subject: BC210441: Robert Hastie Drive Mangawhai

Hi,

Thanks for the landscape plan, have added it to file. I still need evidence of compliance with clauses 1(xii) and (xv) as the committee are not the consent authority in regard to this notice.

Please can you provide an amended plan showing firefighting water supply included and the engineers (presumably) Wiley Geotechnical stormwater design.

Matthew Bayly
Planning Team
Kaipara District Council
Unit 6 - The Hub, 6 Molesworth Drive, Mangawhai 0505
P: (09) 439 3123 | E: buildingsupport@kaipara.govt.nz | W: www.kaipara.govt.nz

==========

Good afternoon,

Please find attached landscape plan. This was approved by the Sanctuary committee satisfying clause 1 (xii) and (xv) a," see attached email and letter

Demonstrating compliance with clause 1(iii) of consent notice 12012486.3 by providing an addendum compliance assessment supported by a suitably qualified and experienced landscape architect. The support landscape architect statement should also include comment on clauses 1 xiii and xiv, Please demonstrate compliance with clause 1(xii) and (xv).

Lisa Fletcher

Project Manager

[cid:9f2cf6b9-6b25-40ef-ab9d-98f4bd0b3e05]

[cid:424bfed5-1d61-4e6e-b77e-9ca1d35fe362] 021 0221 0567

[cid:0d77ebb6-cfd9-418b-8166-ecb054d86af7] lisa@c3bc.co.nz
[cid:9cfd8d5c-6a1b-476a-985d-cea33469cb9a] https://www.c3bc.co.nz
[cid:d03d561a-ea77-4602-acb5-78114f381044] [cid:4e719e36-aaf9-40a9-90fe-63a66320b871]
[cid:43c8c34a-80d0-403c-93ed-3f4ce6f4483d]

Want to schedule a meeting.. click here for my availability HERE.

The information in this email and any attached files is confidential and/or legally privileged. It is intended solely for the use of the individual or entity to which it is addressed. Access to this email by anyone else is not authorised. Any distribution, disclosure, copying out or use of this communication by anyone else than the addressee is prohibited and may be unlawful. Should you receive this email by mistake please notify the sender immediately and then delete this email from your system. Whilst we have taken reasonable precautions to ensure that this e-mail and any attachment has been checked for viruses, we cannot guarantee that they are virus free and we cannot accept liability for any damage sustained as a result of software viruses. We would advise that you carry out your own virus checks, especially before opening an attachment

---

From: Kaipara District Council
Sent: Thursday, July 8, 2021 4:10 PM
To: Lisa Fletcher
Subject: BC210441.1 Request For Further Information - RMA - Robert Hastie Drive Mangawhai

Hi,

Please see attached a Request for Further Information (RFI) for this project. This RFI is regarding compliance with consent notices, no breaches of the District Plan were identified.

Reference Number: BC210441
Project Location: Robert Hastie Drive, Mangawhai
Project Description: New Single Storey 4 Bedroom Dwelling with Attached Double Garage and Swimming Pool

Processing of your PIM / Building Consent application is currently in progress. The attached letter details information which is required to be provided to demonstrate that the proposed work will comply with the NZ Building Code / Resource Management / District Scheme provisions.

So that your information gets to us as promptly as possible, please:

- ensure you reply directly to this email;
- only provide information specifically relating to this project;
- all attachments must be saved in PDF format;

By doing this you will keep your project moving as the information will be delivered directly to the processor - thank you for helping us to help you!

Matthew Bayly
Planning Team
Kaipara District Council
Unit 6 - The Hub, 6 Molesworth Drive, Mangawhai 0505

P: (09) 439 3123 | E: buildingsupport@kaipara.govt.nz | W: www.kaipara.govt.nz

_____

DISCLAIMER

This message is for the designated recipient(s) only, and may contain confidential and/or privileged information.
If you have received it in error, please delete it and advise the sender immediately.
You should not copy or use it for any other purpose, nor disclose its contents to any other person.

Designated Recipient(s): lisa@c3bc.co.nz

Sent From: AlphaOne Building Consent System

Sent Date: 8 July 2021 16:10 - Thursday

_____

_____

DISCLAIMER
This message is for the designated recipient(s) only, and may contain confidential and/or privileged information. If you have received it in error, please delete it and advise the sender immediately. You should not copy or use it for any other purpose, nor disclose its contents to any other person.

Designated Recipient(s): lisa@c3bc.co.nz
Sent From: AlphaOne Building Consent System
Sent Date: 12 July 2021 15:39:38 pm - Monday

_____

_____

DISCLAIMER
This message is for the designated recipient(s) only, and may contain confidential and/or privileged information. If you have received it in error, please delete it and advise the sender immediately. You should not copy or use it for any other purpose, nor disclose its contents to any other person.

Designated Recipient(s): lisa@c3bc.co.nz
Sent From: AlphaOne Building Consent System
Sent Date: 13 July 2021 11:26:03 am - Tuesday

ATTACHMENTS:

- Outlook-1ufrnxar.png.pdf
- Outlook-mj1rdht2.png.pdf
- Outlook-qt3d030t.png.pdf
- Outlook-wqmig524.png.pdf

- Outlook-hxdzpigu.png.pdf

- Outlook-jzrkrhin.png.pdf

- Outlook-friqhy05.png.pdf

- Pages From Kendall - Manufacturer Docs.pdf

Email #50479: BC210441

Project ID: 210441
Date Received: 2021-07-20 10:55:04
Sender: lisa@c3bc.co.nz
Checked By: Matthew Bayly
Accepted By: Matthew Bayly
Subject:
Information Received Via Email: Fw: BC210441: Robert Hastie Drive Mangawhai
Message:
Good morning,

Please find attached updated Wiley Report and my site plans to suit for the stormwater

Lisa Fletcher

Project Manager

[cid:8f3524d8-9125-4671-b4d0-cefa41ca1607]

[cid:e8449a62-c1e5-41dc-a901-c1f143050783] 021 0221 0567

[cid:bf2a6fdd-89d7-4e27-b4aa-8944031a4ad0] lisa@c3bc.co.nz<mailto:lisa@c3bc.co.nz>
[cid:77cab527-5f4c-40c1-bc7c-676d1d3d0daf] https://www.c3bc.co.nz<https://www.c3bc.co.nz/>
[cid:dab357ca-9c00-4ace-abf4-f9d327ed9feb]
<https://www.facebook.com/C3-Building-Compliance-108260724384142>
[cid:099bcd6b-1e37-47fc-9c94-e62012c7d456] <https://www.linkedin.com/in/lisa-fletcher-18476a1a9/>
[cid:3200a7f8-d98c-4022-b03a-9fdcec1a8878] <https://www.linkedin.com/in/daniel-wetherill/>

Want to schedule a meeting.. click here for my availability HERE<https://calendly.com/c3bc>.

The information in this email and any attached files is confidential and/or legally privileged. It is intended solely for the use of the individual or entity to which it is addressed. Access to this email by anyone else is not authorised. Any distribution, disclosure, copying out or use of this communication by anyone else than the addressee is prohibited and may be unlawful. Should you receive this email by mistake please notify the sender immediately and then delete this email from your system. Whilst we have taken reasonable precautions to ensure that this e-mail and any attachment has been checked for viruses, we cannot guarantee that they are virus free and we cannot accept liability for any damage sustained as a result of software viruses. We would advise that you carry out your own virus checks, especially before opening an attachment

---

From: Kaipara District Council <210441@kdc.abcs.co.nz>
Sent: Tuesday, July 13, 2021 3:31 PM
To: Lisa Fletcher <lisa@c3bc.co.nz>
Subject: BC210441: Robert Hastie Drive Mangawhai

Hi,

No, the consent notice requires a stormwater engineered design, if you haven't commissioned this, please do so.

Matthew Bayly
Planning Team
Kaipara District Council
Unit 6 - The Hub, 6 Molesworth Drive, Mangawhai 0505
P: (09) 439 3123 | E: buildingsupport@kaipara.govt.nz | W: www.kaipara.govt.nz

==========

Heya,

Is the attached the one you mean ?

Lisa Fletcher

Project Manager

C3BC Ltd

_____

From: Kaipara District Council
Sent: Tuesday, July 13, 2021 11:26 AM
To: Lisa Fletcher
Subject: BC210441: Robert Hastie Drive Mangawhai

Thanks,

I have added the plan showing the firefighting water to the file, I don't see any stormwater specifications in the wastewater report. Am i missing something?

Matthew Bayly
Planning Team
Kaipara District Council
Unit 6 - The Hub, 6 Molesworth Drive, Mangawhai 0505
P: (09) 439 3123 | E: buildingsupport@kaipara.govt.nz | W: www.kaipara.govt.nz

==========

ATTACHMENTS:

- Outlook-pkgbbocs.png.pdf
- Outlook-okee1sen.png.pdf
- Outlook-ya225ozs.png.pdf
- Outlook-45wdf4pl.png.pdf
- Outlook-0pah3ota.png.pdf
- Outlook-qhaghbx0.png.pdf
- Outlook-jojynemt.png.pdf
- Kendall - On-site wastewater.pdf
- Kendall - Lot 81 The Sanctuary - Amended Sheets 19.07.2021.pdf

Email #51323: BC210441

Project ID: 210441
Date Received: 2021-08-21 14:40:09
Sender: marc@cadetailer.co.nz
Checked By: Sharon Campbell
Accepted By: Sharon Campbell

Subject:

Information Received Via Email: FW: BC210441.1 Request For Further Information - Robert Hastie Drive Mangawhai

Message:

Hi Sharon,

Please find below response to your queries in red with associated attachments.

Section 45: Consent Documents

RFI 1: I have identified other means of compliance within the consent documentation. Please confirm these are correct:

E2 - Alt sol

Yes

E3 - Alt - Gib Aqualine

AS2 as per GIB Wet Area Systems manual

G13/AS3/VM4

AS3

Site Considerations

RFI 1: Please show on the elevations the contours and slopes surrounding the dwelling.

Building platform is cut and filled to level. Elevation E-03 is only elevation with surrounding land that slopes away, this is level for 1m from the footing edge then slopes away. Site Plan supports this with rock wall and batter line. Existing ground levels shown dashed on elevations.

Miscellaneous - Other

RFI 1: The consent notice specifies the proposed buildings for Lot 81 must be located within the identified building areas shown on the Plan - building site N. Please provide evidence the proposed dwelling is within this area.

N shown on site plans. Please find attached Survey plan confirming.

B1: Footings, Foundations (In-situ, masonry, SED)

RFI 1: Expansive soils is outside the scope of the Firth Ribraft Technical manual. The geotech report also notes that although a waffle slab is suitable, the foundation needs to be designed for expansive soils to AS2870. The consent notice requires building foundations to be the subject of specific engineering design by a suitably qualified Chartered Professional Engineer, taking into account the recommendations of the Hawthorn Geddes report dated 12 July 2019. Please have a Chartered Professional Engineer review the design and provide calculations and PS1 to support the design. He will also need to review both geotechnical reports and reference this on his PS1. RFI 1: Please provide a copy of the Engineering Suitability report by Hawthorn Geddes dated 12 July 2019. Please also supply a copy to Wiley Geotechnical Consultants Ltd for their information should they need to revise any of their report.

Please find attached updated Geotech report stating that Specific engineering design and a PS1 is not required. Please also find attached the Hawthorn Geddes report requested. Please note the Wiley Geotechnical Report now overrides this as the Hawthorn Geddes Report was not suitable to support a building consent for any individual lot.

This was confirmed by an Hawthorn Geddes Geotechnical Engineer.
B1: Walls, Wall bracing, Posts, Beams
RFI 1: The wall bracing design does not demonstrate compliance. Please provide the following additional information.
A. Diaphragm is longer than 12m and design is outside scope of NZS3604:2011 requirements for diaphragms (see NZS3604:2011 5.6.1 - Diaphragms may be used to distribute horizontal loads. They shall be no
longer than 12 m with an aspect ratio (length divided by width) no greater
than 2. Diaphragms shall be directly connected to bracing elements and
consist of either:
(a) A floor diaphragm complying with 7.3; or
(b) A ceiling diaphragm complying with 13.5.)
Please revise design or have a Chartered Professional Engineer review the design and provide a PS1 along with supporting docs.
Diaphragm is under 12m as shown on amended sheet 503.

B. Provide separated bracing calculations for the wing section of the dwelling as per NZS3604:2011 5.1.5, or alternatively have a CPEng review the entire bracing, provide calculations and PS1 to support the design for one set of bracing. (Note: you may also wish to used Gib Ezybrace system which has another alternative ref Gib bracing supplement attached to this RFI. We would need to see the calcs on the Gib Ezybrace software sheet and the percentages of bracing per wing).
Please find attached amended sheet 503 & GIB Ezybrace calculations. Please remove sheet 803 from set.

RFI 1: Please specify post to beam fixing detail to ensure there is allowance for uplift as per NZS3604:2011 Sec 9.
Please find attached revised sheet 707
RFI 1: Please ensure structural engineer reviews and include post footing and connection as shown on sheet 707 - outside scope of NZS3604:2011 and all foundations require CPEng as per consent notice.
Please refer to revised Geotech report, footing designed to NZS3604:2011 and uplift with consideration of pile footing embedment of the Geotech report. Footing and connection revised to be within scope of NZS3604:2011.
B2: DURABILITY
RFI 1: Sheet 707 - Timber post is noted to be H1.2, framing appears to be acting as cavity battens also noted to be H1.2. There is no building wrap specified. I am concerned this structure will be subject to wetting and the treatment of timber specified is only suitable for dry situations. Please review this structure and provide evidence of compliance with B2.
Please find attached revised sheet 707
RFI 1: Please provide coating and maintenance requirements for the cedar facings (to posts).
Please find attached revised sheets 201, 301-302, 401-403 & 707 along with maintenance guide.
E1: Surface Water
RFI 1: Where the land is sloping towards the dwelling, please show how overland flow will be directed away from the dwelling ensuring this will not affect other properties. This may need to be included in the SW design for the site.
Please find attached revised sheet 101
E1/VM 1: Drainage
RFI 1: Consent notice conditions require stormwater disposal to be designed by a suitable qualified Chartered Professional Engineer. There are specific requirements to the design as noted in the consent notice. Please have a CPEng design the SW disposal, includes calculations, drawings and how 10,000 ltr will be detained for fire fighting purposes and overflow. Ensure the engineer has a copy of all consent notices.

Please find attached updated Geotech report stating that Stormwater attenuation is not required.
E2: Wall Cladding Systems
RFI 1: Please provide manufacturer details for the EZPanel applicable to this consent ie rebated slab edge, door sill to rebated slab, window and door details, corner junctions etc. If details presented in the plan set are different to manufacturer, please provide full summary for the alternative solution presented.
Please find attached manufacturer details to support current details. One detail (02) changed to suit on sheet 701.
F4: Safety from Falling
RFI 1: Due to the height difference between the dwelling FFL and associated decks, and the land contours, please confirm whether any barriers are required to the decks where there may be a fall greater than 1m. Revised elevations may clarify this already.
As mentioned above, site is cut & fill to level, no falls greater than 1m.
F9: Restricting Access to Residential Pools
RFI 1: It appears that there will be extensive planting alongside the pool fencing which may provide climbable objects within 1200mm of the fencing. Please provide evidence of compliance with F9.3.3 - that the barrier is free of permanent objects or projections on the outside that could assist children in negotiating the barrier. (Refer F9/AS1 Fig 2).
F9 represents planting on the outside of the pool. Garden shown is on the inside of the pool which complies.
RFI 1: Please provide further information to demonstrate that where the building forms all or part of an immediate pool area barrier, then windows opening from a building into the immediate pool area are constructed or positioned to restrict the passage of children. W0.01 restrictor stay not specified.
W0.01 now specified to have restrictor stay as shown on amended sheet 801

RFI 1: Please provide manufacturer technical specification for the pool barrier, installation details, PS1 for the glass barrier, pool gates and self closing latches.
This was attached as part of the support documents - see screenshot of documents uploaded to portal attached.

Kind regards

Marc Vale Director | Architectural Designer
[photo-logo]
021 471 119
marc@cadetailer.co.nz<mailto:marc@cadetailer.co.nz>
Tauranga, Bay of Plenty

<https://img.newoldstamp.com/r/459500/b>
From: Kaipara District Council <210441@kdc.abcs.co.nz<mailto:210441@kdc.abcs.co.nz>>
Date: 23 July 2021 at 2:55:51 PM NZST
To: Lisa Fletcher <lisa@c3bc.co.nz<mailto:lisa@c3bc.co.nz>>
Cc: allocations@complynz.co.nz<mailto:allocations@complynz.co.nz>
Subject: BC210441.1 Request For Further Information - Robert Hastie Drive Mangawhai
?Good afternoon,

Reference Number: BC210441
Project Location: Robert Hastie Drive, Mangawhai

Project Description: New Single Storey 4 Bedroom Dwelling with Attached Double Garage and Swimming Pool

Processing of your building consent application in accordance with s48 of the Building Act is currently in progress. The attached letter details information which is required to be provided to demonstrate that the proposed work will comply with s 48 of the NZ Building Act and Regulations. Please note that the processing time clock has been suspended pending this information.

So that your information gets to us as promptly as possible, please:
- ensure you reply directly to this email and the format of our email address must be in full as follows: 210441@kdc.abcs.co.nz<mailto:210441@kdc.abcs.co.nz>
- provide only the information that specifically relates to this project;
- ensure that all attachments are saved in PDF format;

Following the above will keep your project moving and ensure the information is delivered directly to the processor. To speed up processing we would request that changes to plans are marked using the "cloud" convention - thank you for helping us to help you!

Please feel free to contact me after you have read through the items if you need clarification or have any further questions.

Kind regards,

Sharon Campbell
Contractor 022 697 5120
Kaipara District Council
Unit 6 - The Hub, 6 Molesworth Drive, Mangawhai 0505
P: (09) 439 3123 | E: buildingsupport@kaipara.govt.nz<mailto:buildingsupport@kaipara.govt.nz> | W: www.kaipara.govt.nz<http://www.kaipara.govt.nz>

_____

DISCLAIMER

This message is for the designated recipient(s) only, and may contain confidential and/or privileged information.
If you have received it in error, please delete it and advise the sender immediately.
You should not copy or use it for any other purpose, nor disclose its contents to any other person.

Designated Recipient(s): lisa@c3bc.co.nz<mailto:lisa@c3bc.co.nz>

Sent From: AlphaOne Building Consent System

Sent Date: 23 July 2021 14:55 - Friday

REJECTED ATTACHMENT(S):

Note: The listed file(s) below were rejected because they were not in PDF format.

- LT 556753.tif

ATTACHMENTS:

- EZ panel details.pdf
- dryden-cleaning-and-maintenance_october-2017.pdf
- GIB-Bracing-Supplement-Dec-2016.pdf
- GIB Ezybrace Calculations.pdf
- Kendall - Additional Manufacturer Docs.pdf
- Documents lodged.png.pdf
- 21076_Rev1_Lot 81 The Sanctuary Mangawhai.pdf
- Kendall - Additional Specification.pdf
- Hawthorn Geddes confirmation.pdf
- Kendall - Lot 81 The Sanctuary - Amended Sheets 18.08.2021.pdf
- rpt 190820 engineering suitability R6 signed.pdf

Email #51405: BC210441

Project ID: 210441
Date Received: 2021-08-25 14:05:13
Sender: marc@cadetailer.co.nz
Checked By: Sharon Campbell
Accepted By: Sharon Campbell
Subject:
Information Received Via Email: Re: BC210441: Robert Hastie Drive Mangawhai
Message:
Hi Sharon,

I have most of this sorted, I have just sent off to get the Landscape plan amended. Will come back to you shortly

Thanks

Marc Vale Director | Architectural Designer
[photo-logo]
021 471 119
marc@cadetailer.co.nz<mailto:marc@cadetailer.co.nz>
Tauranga, Bay of Plenty

<https://img.newoldstamp.com/r/459500/b>

From: Kaipara District Council <210441@kdc.abcs.co.nz>
Date: Wednesday, 25 August 2021 at 10:25 AM
To: Marc Vale <marc@cadetailer.co.nz>
Cc: allocations@complynz.co.nz <allocations@complynz.co.nz>
Subject: BC210441: Robert Hastie Drive Mangawhai
Good morning Marc,

I'm working through the RFI response.
I see you have revised sheet 701 but I don't seem to have received a copy.

Can you please send this through at your earliest convenience.

Kind regards,

Sharon Campbell
Contractor
Kaipara District Council
Unit 6 - The Hub, 6 Molesworth Drive, Mangawhai 0505

P: (09) 439 3123 | E: buildingsupport@kaipara.govt.nz | W: www.kaipara.govt.nz

==========

Hi Sharon,

Please find below response to your queries in red with associated attachments.

Section 45: Consent Documents

RFI 1: I have identified other means of compliance within the consent documentation. Please confirm these are correct:

E2 - Alt sol

Yes

E3 - Alt - Gib Aqualine

AS2 as per GIB Wet Area Systems manual

G13/AS3/VM4

AS3

Site Considerations

RFI 1: Please show on the elevations the contours and slopes surrounding the dwelling.

Building platform is cut and filled to level. Elevation E-03 is only elevation with surrounding land that slopes away, this is level for 1m from the footing edge then slopes away. Site Plan supports this with rock wall and batter line. Existing ground levels shown dashed on elevations.

Miscellaneous - Other

RFI 1: The consent notice specifies the proposed buildings for Lot 81 must be located within the identified building areas shown on the Plan - building site N. Please provide evidence the proposed dwelling is within this area.

N shown on site plans. Please find attached Survey plan confirming.

B1: Footings, Foundations (In-situ, masonry, SED)

RFI 1: Expansive soils is outside the scope of the Firth Ribraft Technical manual. The geotech report also notes that although a waffle slab is suitable, the foundation needs to be designed for expansive soils to AS2870. The consent notice requires building foundations to be the subject of specific engineering design by a suitably qualified Chartered Professional Engineer, taking into account the recommendations of the Hawthorn Geddes report dated 12 July 2019. Please have a Chartered Professional Engineer review the design and provide calculations and PS1 to support the design. He will also need to review both geotechnical reports and reference this on his PS1. RFI 1: Please provide a copy of the Engineering Suitability report by Hawthorn Geddes dated 12 July 2019. Please also supply a copy to Wiley Geotechnical Consultants Ltd for their information should they need to revise any of their report.

Please find attached updated Geotech report stating that Specific engineering design and a PS1 is not required. Please also find attached the Hawthorn Geddes report requested. Please note the Wiley Geotechnical Report now overrides this as the Hawthorn Geddes Report was not suitable to support a building consent for any individual lot. This was confirmed by an Hawthorn Geddes Geotechnical Engineer.

B1: Walls, Wall bracing, Posts, Beams

RFI 1: The wall bracing design does not demonstrate compliance. Please provide the following additional information.

A. Diaphragm is longer than 12m and design is outside scope of NZS3604:2011 requirements for diaphragms (see NZS3604:2011 5.6.1 - Diaphragms may be used to distribute horizontal loads. They shall be no
longer than 12 m with an aspect ratio (length divided by width) no greater
than 2. Diaphragms shall be directly connected to bracing elements and
consist of either:

(a) A floor diaphragm complying with 7.3; or

(b) A ceiling diaphragm complying with 13.5.)
Please revise design or have a Chartered Professional Engineer review the design and provide a PS1 along with supporting docs.
Diaphragm is under 12m as shown on amended sheet 503.

B. Provide separated bracing calculations for the wing section of the dwelling as per NZS3604:2011 5.1.5, or alternatively have a CPEng review the entire bracing, provide calculations and PS1 to support the design for one set of bracing. (Note: you may also wish to used Gib Ezybrace system which has another alternative ref Gib bracing supplement attached to this RFI. We would need to see the calcs on the Gib Ezybrace software sheet and the percentages of bracing per wing).
Please find attached amended sheet 503 & GIB Ezybrace calculations. Please remove sheet 803 from set.

RFI 1: Please specify post to beam fixing detail to ensure there is allowance for uplift as per NZS3604:2011 Sec 9.
Please find attached revised sheet 707
RFI 1: Please ensure structural engineer reviews and include post footing and connection as shown on sheet 707 - outside scope of NZS3604:2011 and all foundations require CPEng as per consent notice.
Please refer to revised Geotech report, footing designed to NZS3604:2011 and uplift with consideration of pile footing embedment of the Geotech report. Footing and connection revised to be within scope of NZS3604:2011.
B2: DURABILITY
RFI 1: Sheet 707 - Timber post is noted to be H1.2, framing appears to be acting as cavity battens also noted to be H1.2. There is no building wrap specified. I am concerned this structure will be subject to wetting and the treatment of timber specified is only suitable for dry situations. Please review this structure and provide evidence of compliance with B2.
Please find attached revised sheet 707
RFI 1: Please provide coating and maintenance requirements for the cedar facings (to posts).
Please find attached revised sheets 201, 301-302, 401-403 & 707 along with maintenance guide.
E1: Surface Water
RFI 1: Where the land is sloping towards the dwelling, please show how overland flow will be directed away from the dwelling ensuring this will not affect other properties. This may need to be included in the SW design for the site.
Please find attached revised sheet 101
E1/VM 1: Drainage
RFI 1: Consent notice conditions require stormwater disposal to be designed by a suitable qualified Chartered Professional Engineer. There are specific requirements to the design as noted in the consent notice. Please have a CPEng design the SW disposal, includes calculations, drawings and how 10,000 ltr will be detained for fire fighting purposes and overflow. Ensure the engineer has a copy of all consent notices.
Please find attached updated Geotech report stating that Stormwater attenuation is not required.
E2: Wall Cladding Systems
RFI 1: Please provide manufacturer details for the EZPanel applicable to this consent ie rebated slab edge, door sill to rebated slab, window and door details, corner junctions etc. If details presented in the plan set are different to manufacturer, please provide full summary for the alternative solution presented.
Please find attached manufacturer details to support current details. One detail (02) changed to suit on sheet 701.
F4: Safety from Falling
RFI 1: Due to the height difference between the dwelling FFL and associated decks, and the land contours, please confirm whether any barriers are required to the decks where there may be a fall greater than 1m. Revised elevations

may clarify this already.
As mentioned above, site is cut & fill to level, no falls greater than 1m.
F9: Restricting Access to Residential Pools
RFI 1: It appears that there will be extensive planting alongside the pool fencing which may provide climbable objects within 1200mm of the fencing. Please provide evidence of compliance with F9.3.3 - that the barrier is free of permanent objects or projections on the outside that could assist children in negotiating the barrier. (Refer F9/AS1 Fig 2).
F9 represents planting on the outside of the pool. Garden shown is on the inside of the pool which complies.
RFI 1: Please provide further information to demonstrate that where the building forms all or part of an immediate pool area barrier, then windows opening from a building into the immediate pool area are constructed or positioned to restrict the passage of children. W0.01 restrictor stay not specified.
W0.01 now specified to have restrictor stay as shown on amended sheet 801

RFI 1: Please provide manufacturer technical specification for the pool barrier, installation details, PS1 for the glass barrier, pool gates and self closing latches.
This was attached as part of the support documents aEURO" see screenshot of documents uploaded to portal attached.

Kind regards

Marc Vale Director | Architectural Designer
[photo-logo]
021 471 119
marc@cadetailer.co.nz
Tauranga, Bay of Plenty

From: Kaipara District Council
Date: 23 July 2021 at 2:55:51 PM NZST
To: Lisa Fletcher
Cc: allocations@complynz.co.nz
Subject: BC210441.1 Request For Further Information - Robert Hastie Drive Mangawhai
?Good afternoon,

Reference Number: BC210441
Project Location: Robert Hastie Drive, Mangawhai
Project Description: New Single Storey 4 Bedroom Dwelling with Attached Double Garage and Swimming Pool

Processing of your building consent application in accordance with s48 of the Building Act is currently in progress. The attached letter details information which is required to be provided to demonstrate that the proposed work will comply with s 48 of the NZ Building Act and Regulations. Please note that the processing time clock has been suspended pending this information.

So that your information gets to us as promptly as possible, please:
- ensure you reply directly to this email and the format of our email address must be in full as follows:

210441@kdc.abcs.co.nz
- provide only the information that specifically relates to this project;
- ensure that all attachments are saved in PDF format;

Following the above will keep your project moving and ensure the information is delivered directly to the processor. To speed up processing we would request that changes to plans are marked using the "cloud" convention - thank you for helping us to help you!

Please feel free to contact me after you have read through the items if you need clarification or have any further questions.

Kind regards,

Sharon Campbell
Contractor 022 697 5120
Kaipara District Council
Unit 6 - The Hub, 6 Molesworth Drive, Mangawhai 0505
P: (09) 439 3123 | E: buildingsupport@kaipara.govt.nz | W: www.kaipara.govt.nz

_____

DISCLAIMER

This message is for the designated recipient(s) only, and may contain confidential and/or privileged information.
If you have received it in error, please delete it and advise the sender immediately.
You should not copy or use it for any other purpose, nor disclose its contents to any other person.

Designated Recipient(s): lisa@c3bc.co.nz

Sent From: AlphaOne Building Consent System

Sent Date: 23 July 2021 14:55 - Friday

REJECTED ATTACHMENT(S):
Note: The listed file(s) below were rejected because they were not in PDF format.
- LT 556753.tif

_____

_____

DISCLAIMER
This message is for the designated recipient(s) only, and may contain confidential and/or privileged information. If you have received it in error, please delete it and advise the sender immediately. You should not copy or use it for any other purpose, nor disclose its contents to any other person.

Designated Recipient(s): marc@cadetailer.co.nz, allocations@complynz.co.nz
Sent From: AlphaOne Building Consent System
Sent Date: 25 August 2021 10:25:09 am - Wednesday

REJECTED ATTACHMENT(S):
Note: The listed file(s) below were rejected because they were not in PDF format.
- image001.png
- image00249.png

Email #51416: BC210441

Project ID: 210441
Date Received: 2021-08-25 16:50:09
Sender: marc@cadetailer.co.nz
Checked By: Matthew Bayly
Accepted By: Sharon Campbell
Subject:
Information Received Via Email: Re: BC210441.2 Request For Further Information - Robert Hastie Drive Mangawhai
Message:
Hi Sharon,

Please see below for response to your remaining queries

RFI 2: A. The diaphragm does not appear to be connected directly to the bracing elements below (Line C) as is required by NZS3604:2011. Please review this again.
Living area has been shortened to allow for the C brace walls to be within 12m, please find attached revised sheets 201, 502, 503, 504 & 506.

RFI 1: Please specify post to beam fixing detail to ensure there is allowance for uplift as per NZS3604:2011 Sec 9. NOT RESOLVED - see RFI 2 below.
RFI 2: Proposed post fixing provides 7.5kN fixing, however I believe to comply with NZS3604:2011 Table 9.2, a 11.8kN connection is required to uplift. Please revise or clarify how compliance with B1 has been met (for roof areas outside the living and Master bedroom).
Please find attached revised roof framing plan and detail showing fixing type H to cover the 11.8kN connection.
Please find attached revised sheets 504, 707.

RFI 2: Sheet 701 was missing from the revised plan set. Please send through a copy with your response.

Please find attached

RFI 1: It appears that there will be extensive planting alongside the pool fencing which may provide climbable objects within 1200mm of the fencing. Please provide evidence of compliance with F9.3.3 - that the barrier is free of permanent objects or projections on the outside that could assist children in negotiating the barrier. (Refer F9/AS1 Fig 2). NOT RESOLVED - see RFI 2 below.
RFI 2: Please see attached landscape plan that has been proposed. This does show extensive planting outside and along the pool barrier. Please review and show how compliance with F9 will be achieved.

Please find attached revised landscaping plan with note to say no planting within 1200mm of the pool fence. Architectural plan 201 also noting this.

RFI 1: Please provide manufacturer technical specification for the pool barrier, installation details, PS1 for the glass

barrier, pool gates and self closing latches. NOT RESOLVED - see RFI 2 below.
RFI 2: We did receive information for the aluminium pool barrier, but we did not receive any information for the glass pool barrier. Please provide as per the previous request.

Please find attached glass pool documentation.

Thank you

Marc Vale Director | Architectural Designer
[photo-logo]
021 471 119
marc@cadetailer.co.nz<mailto:marc@cadetailer.co.nz>
Tauranga, Bay of Plenty

<https://img.newoldstamp.com/r/459500/b>

From: Kaipara District Council <210441@kdc.abcs.co.nz>
Date: Wednesday, 25 August 2021 at 11:08 AM
To: lisa@c3bc.co.nz <lisa@c3bc.co.nz>, Marc Vale <marc@mvarchitecture.co.nz>
Cc: allocations@complynz.co.nz <allocations@complynz.co.nz>
Subject: BC210441.2 Request For Further Information - Robert Hastie Drive Mangawhai
Good morning,

Reference Number: BC210441
Project Location: Robert Hastie Drive, Mangawhai
Project Description: New Single Storey 4 Bedroom Dwelling with Attached Double Garage and Swimming Pool

Processing of your building consent application in accordance with s48 of the Building Act is currently in progress. The attached letter details information which is required to be provided to demonstrate that the proposed work will comply with s 48 of the NZ Building Act and Regulations. Please note that the processing time clock has been suspended pending this information.

So that your information gets to us as promptly as possible, please:
- ensure you reply directly to this email and the format of our email address must be in full as follows: 210441@kdc.abcs.co.nz
- provide only the information that specifically relates to this project;
- ensure that all attachments are saved in PDF format;

Following the above will keep your project moving and ensure the information is delivered directly to the processor. To speed up processing we would request that changes to plans are marked using the "cloud" convention - thank you for helping us to help you!

Kind regards,

Sharon Campbell
Contractor 022 697 5120
Kaipara District Council
Unit 6 - The Hub, 6 Molesworth Drive, Mangawhai 0505
P: (09) 439 3123 | E: buildingsupport@kaipara.govt.nz | W: www.kaipara.govt.nz

_____

DISCLAIMER

This message is for the designated recipient(s) only, and may contain confidential and/or privileged information.
If you have received it in error, please delete it and advise the sender immediately.
You should not copy or use it for any other purpose, nor disclose its contents to any other person.

Designated Recipient(s): lisa@c3bc.co.nz, marc@mvarchitecture.co.nz

Sent From: AlphaOne Building Consent System

Sent Date: 25 August 2021 11:08 - Wednesday

REJECTED ATTACHMENT(S):
Note: The listed file(s) below were rejected because they were not in PDF format.
- image001.png
- image00265.png

ATTACHMENTS:

- Glass Outlet VT1 Top Fix.pdf
- Landscaping Design RFI 25-8-21.pdf
- POLARIS-HINGE-BROCHURE_REV11_13.08.18-METRIC-WHITE.pdf
- Kendall - Lot 81 The Sanctuary - Amended Sheets 25.08.2021.pdf

Email #51462: BC210441

Project ID: 210441
Date Received: 2021-08-27 14:30:04
Sender: marc@cadetailer.co.nz
Checked By: Matthew Bayly
Accepted By: Sharon Campbell
Subject:
Information Received Via Email: Re: BC210441: Robert Hastie Drive Mangawhai
Message:
Hi Sharon,

Yes we applied for that, nice little photo from the client attached - 53 Robert Hastie Drive

Thank you

Marc Vale Director | Architectural Designer
[photo-logo]
021 471 119
marc@cadetailer.co.nz<mailto:marc@cadetailer.co.nz>
Tauranga, Bay of Plenty

<https://img.newoldstamp.com/r/459500/b>

From: Kaipara District Council <210441@kdc.abcs.co.nz>
Date: Friday, 27 August 2021 at 2:25 PM
To: Marc Vale <marc@cadetailer.co.nz>
Subject: BC210441: Robert Hastie Drive Mangawhai
Hi Marc,

Did you get a street number for this site? I've contacted council also, but I'm not sure who is working in other departments.
If I can get this one completed, I'm not sure it can go out without a street number, just checking up on that.

But if you have been provided with a number, can you send that through please? And the council notification?

Thanks Marc.

Kind regards,

Sharon Campbell
Contractor

Kaipara District Council
Unit 6 - The Hub, 6 Molesworth Drive, Mangawhai 0505
P: (09) 439 3123 | E: buildingsupport@kaipara.govt.nz | W: www.kaipara.govt.nz

==========

Hi Sharon,

Please see below for response to your remaining queries

RFI 2: A. The diaphragm does not appear to be connected directly to the bracing elements below (Line C) as is required by NZS3604:2011. Please review this again.
Living area has been shortened to allow for the C brace walls to be within 12m, please find attached revised sheets 201, 502, 503, 504 & 506.

RFI 1: Please specify post to beam fixing detail to ensure there is allowance for uplift as per NZS3604:2011 Sec 9. NOT RESOLVED - see RFI 2 below.
RFI 2: Proposed post fixing provides 7.5kN fixing, however I believe to comply with NZS3604:2011 Table 9.2, a 11.8kN connection is required to uplift. Please revise or clarify how compliance with B1 has been met (for roof areas outside the living and Master bedroom).
Please find attached revised roof framing plan and detail showing fixing type H to cover the 11.8kN connection.
Please find attached revised sheets 504, 707.

RFI 2: Sheet 701 was missing from the revised plan set. Please send through a copy with your response.

Please find attached

RFI 1: It appears that there will be extensive planting alongside the pool fencing which may provide climbable objects within 1200mm of the fencing. Please provide evidence of compliance with F9.3.3 - that the barrier is free of permanent objects or projections on the outside that could assist children in negotiating the barrier. (Refer F9/AS1 Fig 2). NOT RESOLVED - see RFI 2 below.
RFI 2: Please see attached landscape plan that has been proposed. This does show extensive planting outside and along the pool barrier. Please review and show how compliance with F9 will be achieved.

Please find attached revised landscaping plan with note to say no planting within 1200mm of the pool fence. Architectural plan 201 also noting this.

RFI 1: Please provide manufacturer technical specification for the pool barrier, installation details, PS1 for the glass barrier, pool gates and self closing latches. NOT RESOLVED - see RFI 2 below.
RFI 2: We did receive information for the aluminium pool barrier, but we did not receive any information for the glass pool barrier. Please provide as per the previous request.

Please find attached glass pool documentation.

Thank you

Marc Vale Director | Architectural Designer
[photo-logo]
021 471 119
marc@cadetailer.co.nz
Tauranga, Bay of Plenty

From: Kaipara District Council
Date: Wednesday, 25 August 2021 at 11:08 AM
To: lisa@c3bc.co.nz , Marc Vale
Cc: allocations@complynz.co.nz
Subject: BC210441.2 Request For Further Information - Robert Hastie Drive Mangawhai
Good morning,

Reference Number: BC210441
Project Location: Robert Hastie Drive, Mangawhai
Project Description: New Single Storey 4 Bedroom Dwelling with Attached Double Garage and Swimming Pool

Processing of your building consent application in accordance with s48 of the Building Act is currently in progress. The attached letter details information which is required to be provided to demonstrate that the proposed work will comply with s 48 of the NZ Building Act and Regulations. Please note that the processing time clock has been suspended pending this information.

So that your information gets to us as promptly as possible, please:
- ensure you reply directly to this email and the format of our email address must be in full as follows: 210441@kdc.abcs.co.nz
- provide only the information that specifically relates to this project;
- ensure that all attachments are saved in PDF format;

Following the above will keep your project moving and ensure the information is delivered directly to the processor. To speed up processing we would request that changes to plans are marked using the "cloud" convention - thank you for helping us to help you!

Kind regards,

Sharon Campbell
Contractor 022 697 5120
Kaipara District Council
Unit 6 - The Hub, 6 Molesworth Drive, Mangawhai 0505
P: (09) 439 3123 | E: buildingsupport@kaipara.govt.nz | W: www.kaipara.govt.nz

_____

DISCLAIMER

This message is for the designated recipient(s) only, and may contain confidential and/or privileged information.
If you have received it in error, please delete it and advise the sender immediately.
You should not copy or use it for any other purpose, nor disclose its contents to any other person.

Designated Recipient(s): lisa@c3bc.co.nz, marc@mvarchitecture.co.nz

Sent From: AlphaOne Building Consent System

Sent Date: 25 August 2021 11:08 - Wednesday

REJECTED ATTACHMENT(S):
Note: The listed file(s) below were rejected because they were not in PDF format.
- image001.png
- image00265.png

_____

_____
DISCLAIMER
This message is for the designated recipient(s) only, and may contain confidential and/or privileged information. If you have received it in error, please delete it and advise the sender immediately. You should not copy or use it for any other purpose, nor disclose its contents to any other person.

Designated Recipient(s): marc@cadetailer.co.nz
Sent From: AlphaOne Building Consent System
Sent Date: 27 August 2021 14:25:12 pm - Friday

REJECTED ATTACHMENT(S):
Note: The listed file(s) below were rejected because they were not in PDF format.
- image001.png
- image00255.png

ATTACHMENTS:

- 20210722_13473563.jpg.pdf

Email #51468: BC210441

Project ID: 210441
Date Received: 2021-08-27 17:40:07
Sender: marc@cadetailer.co.nz
Checked By: Matthew Bayly
Accepted By: Sharon Campbell
Subject:
Information Received Via Email: Re: BC210441.3 Request For Further Information - Robert Hastie Drive Mangawhai
Message:
Hi Sharon

Here you go

Thanks

Marc Vale Director | Architectural Designer
[photo-logo]
021 471 119
marc@cadetailer.co.nz<mailto:marc@cadetailer.co.nz>
Tauranga, Bay of Plenty

<https://img.newoldstamp.com/r/459500/b>

From: Kaipara District Council <210441@kdc.abcs.co.nz>
Date: Friday, 27 August 2021 at 3:09 PM
To: lisa@c3bc.co.nz <lisa@c3bc.co.nz>
Cc: allocations@complynz.co.nz <allocations@complynz.co.nz>, Marc Vale <marc@mvarchitecture.co.nz>
Subject: BC210441.3 Request For Further Information - Robert Hastie Drive Mangawhai
Good afternoon,

Reference Number: BC210441
Project Location: Robert Hastie Drive, Mangawhai
Project Description: New Single Storey 4 Bedroom Dwelling with Attached Double Garage and Swimming Pool

Processing of your building consent application in accordance with s48 of the Building Act is currently in progress. The attached letter details information which is required to be provided to demonstrate that the proposed work will comply with s 48 of the NZ Building Act and Regulations. Please note that the processing time clock has been suspended pending this information.

So that your information gets to us as promptly as possible, please:
- ensure you reply directly to this email and the format of our email address must be in full as follows:

210441@kdc.abcs.co.nz
- provide only the information that specifically relates to this project;
- ensure that all attachments are saved in PDF format;

Following the above will keep your project moving and ensure the information is delivered directly to the processor. To speed up processing we would request that changes to plans are marked using the "cloud" convention - thank you for helping us to help you!

Kind regards,

Sharon Campbell
Contractor 022 697 5120
Kaipara District Council
Unit 6 - The Hub, 6 Molesworth Drive, Mangawhai 0505
P: (09) 439 3123 | E: buildingsupport@kaipara.govt.nz | W: www.kaipara.govt.nz

_____

DISCLAIMER

This message is for the designated recipient(s) only, and may contain confidential and/or privileged information.
If you have received it in error, please delete it and advise the sender immediately.
You should not copy or use it for any other purpose, nor disclose its contents to any other person.

Designated Recipient(s): lisa@c3bc.co.nz

Sent From: AlphaOne Building Consent System

Sent Date: 27 August 2021 15:09 - Friday

REJECTED ATTACHMENT(S):
Note: The listed file(s) below were rejected because they were not in PDF format.
- image001.png
- image0023.png

ATTACHMENTS:

- 53_Robert_Hastie_Dr_Boundaryline_PS1_Glass-Pool-Fence_2020_Rev1.02.pdf

Email #51526: BC210441

Project ID: 210441
Date Received: 2021-08-31 14:20:13
Sender: mbayly@kaipara.govt.nz
Checked By: John Dowden
Accepted By: John Dowden
Subject:
Information Received Via Email: RE: BC210441: Robert Hastie Drive Mangawhai
Message:
Hi,

Have had a look and don't need to review this again.

Thanks,

Ng? mihi

[KDC Logo test June 2015]<http://www.kaipara.govt.nz/>
Matthew Bayly | Planner
Mangawhai Office: Unit 6, The Hub, 6 Molesworth Drive, Mangawhai 0505
Kaipara District Council, Private Bag 1001, Dargaville 0340

If you would like to speak over the phone, I am available between 9 and 11am Wednesdays and Fridays
DDI: 09 439 1239 | Mobile: 021 460 813

mbayly@kaipara.govt.nz<mailto:mbayly@kaipara.govt.nz> |
council@kaipara.govt.nz<mailto:council@kaipara.govt.nz> | www.kaipara.govt.nz<http://www.kaipara.govt.nz/>

From: Kaipara District Council <210441@kdc.abcs.co.nz>
Sent: Friday, 27 August 2021 3:00 PM
To: Matthew Bayly <mbayly@kaipara.govt.nz>
Subject: BC210441: Robert Hastie Drive Mangawhai

CAUTION: This email originated from outside Kaipara District Council. Do not click links or open attachments unless you recognise the sender and know the content is safe.

Good afternoon Matthew,

The planting plans has changed a little. I believe the same area, but they needed to move it 1200mm away from the pool fence.

Do you need to review this again? See attached revised plans and landscape plan.
Let me know if all good.

The only other change is a minor wall internally making bed 3 slightly larger and the living slightly smaller (only about 600mm).
I'll put a copy of the revised plans into the Working folder for your information.

Kind regards,

Sharon Campbell
Contractor
Kaipara District Council
Unit 6 - The Hub, 6 Molesworth Drive, Mangawhai 0505
P: (09) 439 3123 | E: buildingsupport@kaipara.govt.nz<mailto:buildingsupport@kaipara.govt.nz> | W: www.kaipara.govt.nz<http://www.kaipara.govt.nz>

Hi Sharon,

Yes we applied for that, nice little photo from the client attached aEURO" 53 Robert Hastie Drive

Thank you

Marc Vale Director | Architectural Designer
[photo-logo]
021 471 119
marc@cadetailer.co.nz<mailto:marc@cadetailer.co.nz>
Tauranga, Bay of Plenty

From: Kaipara District Council
Date: Friday, 27 August 2021 at 2:25 PM
To: Marc Vale
Subject: BC210441: Robert Hastie Drive Mangawhai
Hi Marc,

Did you get a street number for this site? I've contacted council also, but I'm not sure who is working in other departments.
If I can get this one completed, I'm not sure it can go out without a street number, just checking up on that.

But if you have been provided with a number, can you send that through please? And the council notification?

Thanks Marc.

Kind regards,

Sharon Campbell
Contractor
Kaipara District Council
Unit 6 - The Hub, 6 Molesworth Drive, Mangawhai 0505
P: (09) 439 3123 | E: buildingsupport@kaipara.govt.nz<mailto:buildingsupport@kaipara.govt.nz> | W: www.kaipara.govt.nz<http://www.kaipara.govt.nz>

==========

Hi Sharon,

Please see below for response to your remaining queries

RFI 2: A. The diaphragm does not appear to be connected directly to the bracing elements below (Line C) as is required by NZS3604:2011. Please review this again.
Living area has been shortened to allow for the C brace walls to be within 12m, please find attached revised sheets 201, 502, 503, 504 & 506.

RFI 1: Please specify post to beam fixing detail to ensure there is allowance for uplift as per NZS3604:2011 Sec 9. NOT RESOLVED - see RFI 2 below.
RFI 2: Proposed post fixing provides 7.5kN fixing, however I believe to comply with NZS3604:2011 Table 9.2, a 11.8kN connection is required to uplift. Please revise or clarify how compliance with B1 has been met (for roof areas outside the living and Master bedroom).
Please find attached revised roof framing plan and detail showing fixing type H to cover the 11.8kN connection.
Please find attached revised sheets 504, 707.

RFI 2: Sheet 701 was missing from the revised plan set. Please send through a copy with your response.

Please find attached

RFI 1: It appears that there will be extensive planting alongside the pool fencing which may provide climbable objects within 1200mm of the fencing. Please provide evidence of compliance with F9.3.3 - that the barrier is free of permanent objects or projections on the outside that could assist children in negotiating the barrier. (Refer F9/AS1 Fig 2). NOT RESOLVED - see RFI 2 below.
RFI 2: Please see attached landscape plan that has been proposed. This does show extensive planting outside and along the pool barrier. Please review and show how compliance with F9 will be achieved.

Please find attached revised landscaping plan with note to say no planting within 1200mm of the pool fence. Architectural plan 201 also noting this.

RFI 1: Please provide manufacturer technical specification for the pool barrier, installation details, PS1 for the glass barrier, pool gates and self closing latches. NOT RESOLVED - see RFI 2 below.
RFI 2: We did receive information for the aluminium pool barrier, but we did not receive any information for the glass pool barrier. Please provide as per the previous request.

Please find attached glass pool documentation.

Thank you

Marc Vale Director | Architectural Designer
[photo-logo]
021 471 119
marc@cadetailer.co.nz<mailto:marc@cadetailer.co.nz>
Tauranga, Bay of Plenty

From: Kaipara District Council
Date: Wednesday, 25 August 2021 at 11:08 AM
To: lisa@c3bc.co.nz<mailto:lisa@c3bc.co.nz> , Marc Vale
Cc: allocations@complynz.co.nz<mailto:allocations@complynz.co.nz>
Subject: BC210441.2 Request For Further Information - Robert Hastie Drive Mangawhai
Good morning,

Reference Number: BC210441
Project Location: Robert Hastie Drive, Mangawhai
Project Description: New Single Storey 4 Bedroom Dwelling with Attached Double Garage and Swimming Pool

Processing of your building consent application in accordance with s48 of the Building Act is currently in progress. The attached letter details information which is required to be provided to demonstrate that the proposed work will comply with s 48 of the NZ Building Act and Regulations. Please note that the processing time clock has been suspended pending this information.

So that your information gets to us as promptly as possible, please:
- ensure you reply directly to this email and the format of our email address must be in full as follows: 210441@kdc.abcs.co.nz<mailto:210441@kdc.abcs.co.nz>
- provide only the information that specifically relates to this project;
- ensure that all attachments are saved in PDF format;

Following the above will keep your project moving and ensure the information is delivered directly to the processor. To speed up processing we would request that changes to plans are marked using the "cloud" convention - thank you for helping us to help you!

Kind regards,

Sharon Campbell
Contractor 022 697 5120
Kaipara District Council
Unit 6 - The Hub, 6 Molesworth Drive, Mangawhai 0505
P: (09) 439 3123 | E: buildingsupport@kaipara.govt.nz<mailto:buildingsupport@kaipara.govt.nz> | W: www.kaipara.govt.nz<http://www.kaipara.govt.nz>

_____

DISCLAIMER

This message is for the designated recipient(s) only, and may contain confidential and/or privileged information.
If you have received it in error, please delete it and advise the sender immediately.
You should not copy or use it for any other purpose, nor disclose its contents to any other person.

Designated Recipient(s): lisa@c3bc.co.nz<mailto:lisa@c3bc.co.nz>,
marc@mvarchitecture.co.nz<mailto:marc@mvarchitecture.co.nz>

Sent From: AlphaOne Building Consent System

Sent Date: 25 August 2021 11:08 - Wednesday

REJECTED ATTACHMENT(S):
Note: The listed file(s) below were rejected because they were not in PDF format.
- image001.png
- image00265.png

_____

_____

DISCLAIMER
This message is for the designated recipient(s) only, and may contain confidential and/or privileged information. If you have received it in error, please delete it and advise the sender immediately. You should not copy or use it for any other purpose, nor disclose its contents to any other person.

Designated Recipient(s): marc@cadetailer.co.nz<mailto:marc@cadetailer.co.nz>
Sent From: AlphaOne Building Consent System
Sent Date: 27 August 2021 14:25:12 pm - Friday

REJECTED ATTACHMENT(S):
Note: The listed file(s) below were rejected because they were not in PDF format.
- image001.png
- image00255.png

_____

ATTACHMENTS:

* .<https://kdc.abcs.co.nz/a2/public/download/70f5bfa2-2cdc-32a0-b85b-f99b1e636028>

_____

DISCLAIMER
This message is for the designated recipient(s) only, and may contain confidential and/or privileged information. If you have received it in error, please delete it and advise the sender immediately. You should not copy or use it for any other purpose, nor disclose its contents to any other person.

Designated Recipient(s): mbayly@kaipara.govt.nz<mailto:mbayly@kaipara.govt.nz>
Sent From: AlphaOne Building Consent System
Sent Date: 27 August 2021 14:59:58 pm - Friday

REJECTED ATTACHMENT(S):
Note: The listed file(s) below were rejected because they were not in PDF format.
- image001.jpg

Email #53508: BC210441

Project ID: 210441
Date Received: 2021-11-15 18:35:07
Sender: no-reply@abcs.co.nz
Checked By: Steve Corkin
Accepted By: Steve Corkin
Subject:
Information Received Via Email: BC210441: New Documents Uploaded
Message:

Attention: BC210441 Assigned Staff
There are new document(s) that have been uploaded on BC210441 and these are:

Amended_bracing.pdfKronospan_OSB_Codemark.pdfKronospan_OSB_Warranty.pdfKronospan_OSB_Design_Install_Guide.pdfKronospan_OSB_Pass.pdf

To view these documents, click the "Documents" button and accept them from there.
Generated by:AlphaOne Building Consent Systemwww.abcs.co.nz | www.alphaonebuildingconsent.comDate & Time: 15 November 2021, 6:30 pm - Monday | Signature Hash: 47795408b008da944a4a9cbcdfb2f069e574b8c9ATTENTION: Please do not reply to this email as the mailbox is unattended.
DISCLAIMER

This message is for the designated recipient(s) only, and may contain confidential and/or privileged information.
If you have received it in error, please delete it and advise the sender immediately.
You should not copy or use it for any other purpose, nor disclose its contents to any other person.

Designated Recipient(s): 210441@kdc.abcs.co.nz
Sent From: AlphaOne Building Consent System
Sent Date: 15 November 2021 18:30 - Monday

Email #53722: BC210441

Project ID: 210441
Date Received: 2021-11-22 18:35:02
Sender: no-reply@abcs.co.nz
Checked By: Steve Corkin
Accepted By: Steve Corkin
Subject:
Information Received Via Email: BC210441: New Documents Uploaded
Message:

Attention: BC210441 Assigned Staff
There are new document(s) that have been uploaded on BC210441 and these are:

Amended_bracing.pdfKronospan_OSB_Codemark.pdfKronospan_OSB_Warranty.pdfKronospan_OSB_Design_Install_Guide.pdfKronospan_OSB_Pass.pdf21076_PS4_Lot_81_The_Sanctuary_Mangawhai.pdf

To view these documents, click the "Documents" button and accept them from there.
Generated by:AlphaOne Building Consent Systemwww.abcs.co.nz | www.alphaonebuildingconsent.comDate & Time: 22 November 2021, 6:30 pm - Monday | Signature Hash: 3b2d3daac29a5c16bf45a1c7646ae9b4a0d8901cATTENTION: Please do not reply to this email as the mailbox is unattended.
DISCLAIMER

This message is for the designated recipient(s) only, and may contain confidential and/or privileged information.
If you have received it in error, please delete it and advise the sender immediately.
You should not copy or use it for any other purpose, nor disclose its contents to any other person.

Designated Recipient(s): 210441@kdc.abcs.co.nz
Sent From: AlphaOne Building Consent System
Sent Date: 22 November 2021 18:30 - Monday

Email #58621: BC210441

Project ID: 210441
Date Received: 2022-05-19 12:35:04
Sender: no-reply@abcs.co.nz
Checked By: Greg Bellam
Accepted By: Greg Bellam
Subject:
Information Received Via Email: BC210441: New Documents Uploaded
Message:

Attention: BC210441 Assigned Staff
There are new document(s) that have been uploaded on BC210441 and these are:
asbuilt_drainage_.jpg.pdfasbuilt_pic.jpg.pdfps3_drainage.jpg.pdfwaterproof.jpg.pdf

To view these documents, click the "Documents" button and accept them from there.
Generated by:AlphaOne Building Consent Systemwww.abcs.co.nz | www.alphaonebuildingconsent.comDate & Time: 19 May 2022, 12:30 pm - Thursday | Signature Hash: eef735ab96a2b2309d40368ab8feddf582b0eee9ATTENTION: Please do not reply to this email as the mailbox is unattended.
DISCLAIMER

This message is for the designated recipient(s) only, and may contain confidential and/or privileged information.
If you have received it in error, please delete it and advise the sender immediately.
You should not copy or use it for any other purpose, nor disclose its contents to any other person.

Designated Recipient(s): 210441@kdc.abcs.co.nz
Sent From: AlphaOne Building Consent System
Sent Date: 19 May 2022 12:30 - Thursday

Email #60901: BC210441

Project ID: 210441
Date Received: 2022-08-03 12:35:04
Sender: lance@coastalhomesnz.com
Checked By: John Edwards
Accepted By: John Edwards
Subject:
Information Received Via Email: Re: BC210441 Inspection Report
Message:
Hi John 53 Robert Hastie Drive
We should be able to Sign this off now.

The pool was covered by your inspection onsite and ok to install pool as per site notes from Gregs inspection.
The excavations are all done on engineered fill as the whole site was cut and fill and passed off by Matt Wileys inspections and producer statements.

The slab PS4 this was a standard rib raft floor and was inspected by council only Northern Foundations have supplied ROW
Could we please get this wrapped up for the clients now

cheers

Lance Vale
Coastal Homes Northland
021-2224833
Email: lance@coastalhomesnz.com

On Tue, Jun 28, 2022 at 5:19 PM Kaipara District Council <
210441@kdc.abcs.co.nz> wrote:

> Our inspection team have carried out a site inspection on the above
> project today, please find attached the inspectors site notice for your
> information.
>
> If you have any queries regarding the content of the site notice please
> contact the inspector on phone 0800 727 059.
>
>
> ----------
>

> *DISCLAIMER*
>
>
> This message is for the designated recipient(s) only, and may contain
> confidential and/or privileged information.
> If you have received it in error, please delete it and advise the sender
> immediately.
> You should not copy or use it for any other purpose, nor disclose its
> contents to any other person.
>
>
> Designated Recipient(s): lance@coastalhomesnz.com,
> jason@northernfoundationsltd.co.nz, lisa@c3bc.co.nz
>
> Sent From: AlphaOne Building Consent System
>
> Sent Date: 28 June 2022 17:17 - Tuesday
>
>

Email #60985: BC210441

Project ID: 210441
Date Received: 2022-08-06 10:40:03
Sender: linda.kendall@xtra.co.nz
Checked By:
Accepted By:
Subject:
Information Received Via Email: RE: BC210441 Form 7: Code Compliance Certificate - 53 Robert Hastie Drive Mangawhai
Message:
Hi John

That's awesome news, thank you.

Can you let me know how important it is to have the information correct on the CCC?

Just that some of the information is incorrect, mostly, it is contact information - like the name of contact, should be Linda Kendall (Lance (Vale) was the builder) and our address, as we no longer live in Whenuapai (just in case you would be posting anything out to us).

Best Regards

Linda Kendall

PO Box 401094

Mangawhai Heads

0541

From: Kaipara District Council <210441@kdc.abcs.co.nz>
Sent: Friday, 5 August 2022 3:17 pm
To: linda.kendall@xtra.co.nz
Cc: lance@coastalhomesnz.com
Subject: BC210441 Form 7: Code Compliance Certificate - 53 Robert Hastie Drive Mangawhai

Dear Sir/Madam,

Reference Number: BC210441

Form 7: Code Compliance Certificate

John Edwards
building control officer
Kaipara District Council
Unit 6 - The Hub, 6 Molesworth Drive, Mangawhai 0505
P: (09) 439 3123 | E: buildingsupport@kaipara.govt.nz
<mailto:buildingsupport@kaipara.govt.nz> | W: www.kaipara.govt.nz
<http://www.kaipara.govt.nz>

_____

DISCLAIMER

This message is for the designated recipient(s) only, and may contain confidential and/or privileged information.
If you have received it in error, please delete it and advise the sender immediately.
You should not copy or use it for any other purpose, nor disclose its contents to any other person.

Designated Recipient(s): linda.kendall@xtra.co.nz
<mailto:linda.kendall@xtra.co.nz>

Sent From: AlphaOne Building Consent System

Sent Date: 5 August 2022 15:16 - Friday

Email #166800: BC210441

Project ID: 210441
Date Sent: 2021-06-30 10:56:03
Recipient: lance@coastalhomesnz.com
Sender: Fay Fergus
Subject: BC210441: Robert Hastie Drive Mangawhai
Message:

Hello

Thank you for your Building Consent application. Attached is the invoice for BC210441. Please use BC210441 as reference when making payment.

Your application is being checked for completeness and will not be formally accepted until payment and any requested information has been received.

Please be aware that further charges for specialist input may apply if applicable. For example: Engineering calculations or structural engineering design (SED)
requires review by KDC contracting engineers since no processing officer is qualified to assess engineering calculations. This is the situation and practice of
many smaller Councils across the country. Simple SED (e.g. "SED beam, raft or waffle slab, etc") are able to be processed in-house.

If you require any further assistance, please do not hesitate to contact me.

Kind Regards

Fay Fergus
Building Technical Support
Kaipara District Council
Unit 6 - The Hub, 6 Molesworth Drive, Mangawhai 0505
P: (09) 439 3123 | E: buildingsupport@kaipara.govt.nz | W: www.kaipara.govt.nz

Email #166812: BC210441

Project ID: 210441
Date Sent: 2021-06-30 12:00:28
Recipient: lisa@c3bc.co.nz
Sender: Fay Fergus
Subject:
BC210441.1 Request For Further Information - Vetting - Robert Hastie Drive Mangawhai
Message:
Hello Lisa

Reference Number: BC210441
Project Location: Robert Hastie Drive, Mangawhai
Project Description: New Single Storey 4 Bedroom Dwelling with Attached Double Garage and Swimming Pool

Thank you for lodging your building consent application with the Kaipara District Council, the application has been reviewed for completeness in accordance with s45 of the Act. The attached letter details information which is required to be provided to enable your application to be formally receipted.

All information is to be supplied within 28 days (or the application may be refused). Please keep us informed if additional time is required.

So that your information gets to us as promptly as possible, please:

- ensure you reply directly to this email;
- only provide information specifically relating to this project;
- all attachments must be saved in PDF format;

By doing this you will keep your project moving as the information will be delivered directly to the processor. To speed up processing we would request that changes to plans are marked using the "cloud" convention - thank you for helping us to help you!

If you do not receive the automated reply confirmation from Kaipara District Council for the info sent then Kaipara District Council has not received your information.

Kind Regards

Fay Fergus
Building Technical Support

Kaipara District Council
Unit 6 - The Hub, 6 Molesworth Drive, Mangawhai 0505
P: (09) 439 3123 | E: buildingsupport@kaipara.govt.nz | W: www.kaipara.govt.nz

Email #166917: BC210441

Project ID: 210441
Date Sent: 2021-06-30 19:55:06
Recipient: lisa@c3bc.co.nz
Sender: AlphaOne System
Subject:
RE: Fw: BC210441.1 Request For Further Information - Vetting - Robert Hastie Drive Mangawhai
Message:
Hello

Thank you for your message regarding your application with Kaipara District Council. This is an automated response to confirm your message has been received by the assigned officer for review. You can expect a response within 5 working days.

We accept email attachments in PDF, JPG and PNG format.

ACCEPTED ATTACHMENTS:
- Outlook-ox5vy2mh.png.pdf (28.32kB)
- Outlook-stnhl5mx.png.pdf (2.40kB)
- Outlook-etq4qo0q.png.pdf (2.38kB)
- Outlook-kbj2jneb.png.pdf (2.27kB)
- Outlook-1euhazjr.png.pdf (2.13kB)
- Outlook-dunwmewk.png.pdf (2.25kB)
- Outlook-by2fsivi.png.pdf (2.99kB)
- PF Application Urban Number 201705.pdf (239.29kB)
- Kendall - Lot 81 The Sanctuary - Amended Sheets 30.06.2021.pdf (383.58kB)
- Kendall - Additional Manufacturer Docs.pdf (121.94kB)

For further information or enquiries please email 210441@kdc.abcs.co.nz.

Kind regards

Kaipara District Council
Unit 6 - The Hub
6 Molesworth Drive
Mangawhai 0505
www.kaipara.govt.nz

Email #166943: BC210441

Project ID: 210441
Date Sent: 2021-07-01 11:00:07
Recipient: lisa@c3bc.co.nz
Sender: AlphaOne System
Subject: Application Accepted
Message:

Dear Lisa Fletcher,

Your application for Building Consent including PIM with reference code 44408311CW has passed the Section 45 check and has been lodged with Kaipara District Council.

If you entered an electronic application you can track its progress on the customer portal https://consents-kdc.abcs.co.nz/.

You may receive emails regarding your application from time to time.

Regards,

Kaipara District Council
Phone: (09) 439 3123
Email: buildingsupport@kaipara.govt.nz

Email #167165: BC210441

Project ID: 210441
Date Sent: 2021-07-03 11:10:06
Recipient: lisa@c3bc.co.nz
Sender: AlphaOne System
Subject:
RE: Fw: BC210441.1 Request For Further Information - Vetting - Robert Hastie Drive Mangawhai
Message:
Hello

Thank you for your message regarding your application with Kaipara District Council. This is an automated response to confirm your message has been received by the assigned officer for review. You can expect a response within 5 working days.

We accept email attachments in PDF, JPG and PNG format.

ACCEPTED ATTACHMENTS:
- Outlook-g3o4uyto.png.pdf (28.32kB)
- Outlook-ejavidal.png.pdf (2.40kB)
- Outlook-tl32cpyz.png.pdf (2.38kB)
- Outlook-p5l5bsuy.png.pdf (2.27kB)
- Outlook-sqey0jno.png.pdf (2.13kB)
- Outlook-row4myso.png.pdf (2.25kB)
- Outlook-ktqwcgwa.png.pdf (2.99kB)
- Outlook-pfylsufl.png.pdf (28.33kB)
- Outlook-sbx2huxp.png.pdf (2.40kB)
- Outlook-jrd3j3f5.png.pdf (2.38kB)
- Outlook-lhv2rure.png.pdf (2.27kB)
- Outlook-o3c4g2lw.png.pdf (2.13kB)
- Outlook-vmlswchy.png.pdf (2.25kB)
- Outlook-2urvfbnj.png.pdf (2.99kB)
- PF Application Urban Number 201705.pdf (239.29kB)
- Kendall - Lot 81 The Sanctuary - Amended Sheets 30.06.2021.pdf (383.58kB)
- Kendall - Additional Manufacturer Docs.pdf (121.94kB)

For further information or enquiries please email 210441@kdc.abcs.co.nz.

Kind regards

Kaipara District Council

Unit 6 - The Hub
6 Molesworth Drive
Mangawhai 0505
www.kaipara.govt.nz

Email #167192: BC210441

Project ID: 210441
Date Sent: 2021-07-05 09:50:05
Recipient: ffergus@kaipara.govt.nz
Sender: AlphaOne System
Subject:
RE: FW: BC210441.1 Request For Further Information - Vetting - Robert Hastie Drive Mangawhai
Message:
Hello

Thank you for your message regarding your application with Kaipara District Council. This is an automated response to confirm your message has been received by the assigned officer for review. You can expect a response within 5 working days.

We accept email attachments in PDF, JPG and PNG format.

ACCEPTED ATTACHMENTS:
- Outlook-ox5vy2mh.png.pdf (28.32kB)
- Outlook-stnhl5mx.png.pdf (2.40kB)
- Outlook-etq4qo0q.png.pdf (2.38kB)
- Outlook-kbj2jneb.png.pdf (2.27kB)
- Outlook-1euhazjr.png.pdf (2.13kB)
- Outlook-dunwmewk.png.pdf (2.25kB)
- Outlook-by2fsivi.png.pdf (2.99kB)
- PF Application Urban Number 201705.pdf (239.29kB)
- Kendall - Lot 81 The Sanctuary - Amended Sheets 30.06.2021.pdf (383.58kB)
- Kendall - Additional Manufacturer Docs.pdf (121.94kB)

For further information or enquiries please email 210441@kdc.abcs.co.nz.

Kind regards

Kaipara District Council
Unit 6 - The Hub
6 Molesworth Drive
Mangawhai 0505
www.kaipara.govt.nz

Email #167193: BC210441

Project ID: 210441
Date Sent: 2021-07-05 09:51:42
Recipient: lisa@c3bc.co.nz
Sender: Fay Fergus
Subject: BC210441: Robert Hastie Drive Mangawhai
Message:

Hello Lisa

Thank you for your email.

As per the email sent to you on 1 July 2021, yes, the application has been formally received. You can check the Portal at any time to confirm status of the application.

Have a great week!

Kind Regards

Fay Fergus
Building Technical Support
Kaipara District Council
Unit 6 - The Hub, 6 Molesworth Drive, Mangawhai 0505
P: (09) 439 3123 | E: buildingsupport@kaipara.govt.nz | W: www.kaipara.govt.nz

==========

Kia Ora,

Can you please confirm this has been Formally Received ?

Lisa Fletcher

Project Manager

[cid:93b82ddd-1e83-409c-b906-5a20ae760846]

[cid:cc05a47f-c8ff-4f8a-abeb-1ccb41ba4e0d] 021 0221 0567

[cid:c09affac-a4a3-4017-9f9d-027d4d8d7dee] lisa@c3bc.co.nz
[cid:39987b4a-de9e-40e7-8a37-f386e7028060] https://www.c3bc.co.nz
[cid:ea10e7f0-6d2f-4186-81c7-dc9fd4125a41] [cid:2841f17c-e996-4d6b-a3c9-25a4330198a1]
[cid:565bca65-5764-4632-8525-2868a9dc5dc7]

Want to schedule a meeting.. click here for my availability HERE.

The information in this email and any attached files is confidential and/or legally privileged. It is intended solely for the use of the individual or entity to which it is addressed. Access to this email by anyone else is not authorised. Any distribution, disclosure, copying out or use of this communication by anyone else than the addressee is prohibited and may be unlawful. Should you receive this email by mistake please notify the sender immediately and then delete this email from your system. Whilst we have taken reasonable precautions to ensure that this e-mail and any attachment has been checked for viruses, we cannot guarantee that they are virus free and we cannot accept liability for any damage sustained as a result of software viruses. We would advise that you carry out your own virus checks, especially before opening an attachment

_____

From: Lisa Fletcher
Sent: Wednesday, June 30, 2021 7:53 PM
To: council@kaipara.govt.nz ; Kaipara District Council
Subject: Fw: BC210441.1 Request For Further Information - Vetting - Robert Hastie Drive Mangawhai

Kia Ora,

Please see attached the RFI response to your vetting queries.

1. The invoice has been paid 03/06/21

1. Application Form as the property does not have a registered Council street number.

1. Plumbing & Drainage Detailing Please provide the following:
2. a. Owner Specification/Installation manual for the electric hot water cylinder (attached)
3. b. Storm water dispersal detail - water tank overflow (attached)

Please also see attached an application for Council street number/Rapid address of the property.

Thanks for your time.

Lisa Fletcher

Project Manager

[cid:87f02805-1c87-44d6-8f34-86124943dacb]

[cid:e1a2a4b5-9c80-4882-a96e-bf075149406b] 021 0221 0567

[cid:04685219-aa46-47e7-b704-d9d2ba126698] lisa@c3bc.co.nz
[cid:c3f6a23d-7ccc-4c63-876e-ca456b306117] https://www.c3bc.co.nz
[cid:362a1aaf-0dc5-4237-b8fc-aae1b2f61a03] [cid:88d664d5-8ef1-467e-a491-860ccd34cc19]
[cid:2549c8f1-621d-44e7-806a-978820e191cd]

Want to schedule a meeting.. click here for my availability HERE.

The information in this email and any attached files is confidential and/or legally privileged. It is intended solely for the use of the individual or entity to which it is addressed. Access to this email by anyone else is not authorised. Any distribution, disclosure, copying out or use of this communication by anyone else than the addressee is prohibited and may be unlawful. Should you receive this email by mistake please notify the sender immediately and then delete this email from your system. Whilst we have taken reasonable precautions to ensure that this e-mail and any attachment has been checked for viruses, we cannot guarantee that they are virus free and we cannot accept liability for any damage sustained as a result of software viruses. We would advise that you carry out your own virus checks, especially before opening an attachment

---

From: Kaipara District Council
Sent: Wednesday, June 30, 2021 12:00 PM
To: Lisa Fletcher
Subject: BC210441.1 Request For Further Information - Vetting - Robert Hastie Drive Mangawhai

Hello Lisa

Reference Number: BC210441
Project Location: Robert Hastie Drive, Mangawhai
Project Description: New Single Storey 4 Bedroom Dwelling with Attached Double Garage and Swimming Pool

Thank you for lodging your building consent application with the Kaipara District Council, the application has been reviewed for completeness in accordance with s45 of the Act. The attached letter details information which is required to be provided to enable your application to be formally receipted.

All information is to be supplied within 28 days (or the application may be refused). Please keep us informed if additional time is required.

So that your information gets to us as promptly as possible, please:

- ensure you reply directly to this email;
- only provide information specifically relating to this project;
- all attachments must be saved in PDF format;

By doing this you will keep your project moving as the information will be delivered directly to the processor. To speed up processing we would request that changes to plans are marked using the "cloud" convention - thank you for helping us to help you!

If you do not receive the automated reply confirmation from Kaipara District Council for the info sent then Kaipara District Council has not received your information.

Kind Regards

Fay Fergus
Building Technical Support
Kaipara District Council
Unit 6 - The Hub, 6 Molesworth Drive, Mangawhai 0505
P: (09) 439 3123 | E: buildingsupport@kaipara.govt.nz | W: www.kaipara.govt.nz

_____

DISCLAIMER

This message is for the designated recipient(s) only, and may contain confidential and/or privileged information.
If you have received it in error, please delete it and advise the sender immediately.
You should not copy or use it for any other purpose, nor disclose its contents to any other person.

Designated Recipient(s): lisa@c3bc.co.nz

Sent From: AlphaOne Building Consent System

Sent Date: 30 June 2021 12:00 - Wednesday

Email #167766: BC210441

Project ID: 210441
Date Sent: 2021-07-08 16:10:14
Recipient: lisa@c3bc.co.nz
Sender: Matthew Bayly
Subject:
BC210441.1 Request For Further Information - RMA - Robert Hastie Drive Mangawhai
Message:
Hi,

Please see attached a Request for Further Information (RFI) for this project. This RFI is regarding compliance with consent notices, no breaches of the District Plan were identified.

Reference Number: BC210441
Project Location: Robert Hastie Drive, Mangawhai
Project Description: New Single Storey 4 Bedroom Dwelling with Attached Double Garage and Swimming Pool

Processing of your PIM / Building Consent application is currently in progress. The attached letter details information which is required to be provided to demonstrate that the proposed work will comply with the NZ Building Code / Resource Management / District Scheme provisions.

So that your information gets to us as promptly as possible, please:

- ensure you reply directly to this email;
- only provide information specifically relating to this project;
- all attachments must be saved in PDF format;

By doing this you will keep your project moving as the information will be delivered directly to the processor - thank you for helping us to help you!

Matthew Bayly
Planning Team
Kaipara District Council
Unit 6 - The Hub, 6 Molesworth Drive, Mangawhai 0505
P: (09) 439 3123 | E: buildingsupport@kaipara.govt.nz | W: www.kaipara.govt.nz

Email #167956: BC210441

Project ID: 210441
Date Sent: 2021-07-09 16:05:13
Recipient: lisa@c3bc.co.nz
Sender: AlphaOne System
Subject:
RE: Fw: BC210441.1 Request For Further Information - RMA - Robert Hastie Drive Mangawhai
Message:
Hello

Thank you for your message regarding your application with Kaipara District Council. This is an automated response to confirm your message has been received by the assigned officer for review. You can expect a response within 5 working days.

We accept email attachments in PDF, JPG and PNG format.

ACCEPTED ATTACHMENTS:
- Outlook-5dfiqcgg.png.pdf (28.32kB)
- Outlook-3m5y4qmn.png.pdf (2.40kB)
- Outlook-0hs5zdz0.png.pdf (2.38kB)
- Outlook-yt11ro1y.png.pdf (2.27kB)
- Outlook-xlpx0uyo.png.pdf (2.13kB)
- Outlook-xcnyz3tl.png.pdf (2.25kB)
- Outlook-5he4ljzz.png.pdf (2.99kB)
- Kendall Landscaping - Lot 81 The Sanctuary 95.pdf (934.35kB)
- The Sanctuary Design Committee Approval Form Lot 81 KENDALL78.pdf (68.22kB)
- Committe Approval Email.pdf (39.78kB)

For further information or enquiries please email 210441@kdc.abcs.co.nz.

Kind regards

Kaipara District Council
Unit 6 - The Hub
6 Molesworth Drive
Mangawhai 0505
www.kaipara.govt.nz

Email #167973: BC210441

Project ID: 210441
Date Sent: 2021-07-09 17:15:04
Recipient: simon@magmaenterprises.co.nz
Sender: Simon Johnson
Subject: Specialist Input Requested - 9 Jul 2021
Message:

Hello Simon Johnson!

Specialist input has been requested on the following:

BC Number: BC210327
Building: Main Building
Question(s):
G13: Foul Water: Does the proposal comply with G13.2 and demonstrate that buildings in which sanitary fixtures and sanitary appliances using water-borne waste disposal are installed will be provided with: (a) an adequate plumbing and draining system to carry foul water to appropriate outfalls, and (b) if no sewer is available, an adequate system for the storage, treatment, and disposal of foul water?
Notes: Hi Simon,

The consent (210327) includes proposal for 'secondary' wastewater treatment disposal system. Please have a look.

Regards

Vikrant

BC Number: BC210401
Building: Main Building
Question(s):
G13: Foul Water: Does the proposal comply with G13.2 and demonstrate that buildings in which sanitary fixtures and sanitary appliances using water-borne waste disposal are installed will be provided with: (a) an adequate plumbing and draining system to carry foul water to appropriate outfalls, and (b) if no sewer is available, an adequate system for the storage, treatment, and disposal of foul water?

Notes: Hi Simon

Could you please review this Wastewater System

Cheers

Kerry

BC Number: BC210439
Building: Main Building
Question(s):
G13: Foul Water: Does the proposal comply with G13.2 and demonstrate that buildings in which sanitary fixtures and sanitary appliances using water-borne waste disposal are installed will be provided with: (a) an adequate plumbing and draining system to carry foul water to appropriate outfalls, and (b) if no sewer is available, an adequate system for the storage, treatment, and disposal of foul water?
Notes: Hi Simon

Could you please review this Wastewater System.

Cheers

Kerry

BC Number: BC210440
Building: Main Building
Question(s):
G13: Foul Water: Does the proposal comply with G13.2 and demonstrate that buildings in which sanitary fixtures and sanitary appliances using water-borne waste disposal are installed will be provided with: (a) an adequate

plumbing and draining system to carry foul water to appropriate outfalls, and (b) if no sewer is available, an adequate system for the storage, treatment, and disposal of foul water?

Notes: Hi Simon

Could you please review this Wastewater System

Cheers

Kerry

BC Number: BC210441
Building: Main Building
Question(s):
G13: Foul Water: Does the proposal comply with G13.2 and demonstrate that buildings in which sanitary fixtures and sanitary appliances using water-borne waste disposal are installed will be provided with: (a) an adequate plumbing and draining system to carry foul water to appropriate outfalls, and (b) if no sewer is available, an adequate system for the storage, treatment, and disposal of foul water?

Notes: Hi Simon

Could you please review this Wastewater System

Cheers

Kerry

BC Number: BC210450
Building: Main Building
Question(s):
G13: Foul Water: Does the proposal comply with G13.2 and demonstrate that buildings in which sanitary fixtures and sanitary appliances using water-borne waste disposal are installed will be provided with: (a) an adequate

plumbing and draining system to carry foul water to appropriate outfalls, and (b) if no sewer is available, an adequate system for the storage, treatment, and disposal of foul water?

Notes: Hi Simon

Could you please review this Wastewater System.

Cheers

Kerry

BC Number: BC210453
Building: Main Building
Question(s):
G13: Foul Water: Does the proposal comply with G13.2 and demonstrate that buildings in which sanitary fixtures and sanitary appliances using water-borne waste disposal are installed will be provided with: (a) an adequate plumbing and draining system to carry foul water to appropriate outfalls, and (b) if no sewer is available, an adequate system for the storage, treatment, and disposal of foul water?

Notes: Hi Simon

Could you please review this Wastewater System

Cheers

Kerry

BC Number: BC210456
Building: Main Building
Question(s):
G13: Foul Water: Does the proposal comply with G13.2 and demonstrate that buildings in which sanitary fixtures and sanitary appliances using water-borne waste disposal are installed will be provided with: (a) an adequate

plumbing and draining system to carry foul water to appropriate outfalls, and (b) if no sewer is available, an adequate system for the storage, treatment, and disposal of foul water?

Notes: Hi Simon

Could you please review this Wastewater System

Cheers

Kerry

BC Number: BC210457
Building: Main Building
Question(s):
G13: Foul Water: Does the proposal comply with G13.2 and demonstrate that buildings in which sanitary fixtures and sanitary appliances using water-borne waste disposal are installed will be provided with: (a) an adequate plumbing and draining system to carry foul water to appropriate outfalls, and (b) if no sewer is available, an adequate system for the storage, treatment, and disposal of foul water?

Notes: Hi Simon

Could you please review this Wastewater System

Cheers

Kerry

Click the link to log in to your Dashboard: http://kdc.abcs.co.nz/dashboard/

Generated by:

AlphaOne Building Consent System

www.abcs.co.nz | www.alphaonebuildingconsent.com

Date & Time: 9 July 2021, 5:15 pm - Friday | Signature Hash: b22357392015637011234e34e7eb6e647d2fa670

Email #167997: BC210441

Project ID: 210441
Date Sent: 2021-07-12 07:50:24
Recipient: mbayly@kaipara.govt.nz
Sender: Greg Bellam
Subject: BC210441: A new email has been allocated to you
Message:

Hello Matthew Bayly,

A new email for BC210441 has been allocated to you. Please check and take appropriate action.

https://kdc.abcs.co.nz/jobs/210441/communication/?optilbox

— AlphaOne System

Email #168082: BC210441

Project ID: 210441
Date Sent: 2021-07-12 15:39:40
Recipient: lisa@c3bc.co.nz
Sender: Matthew Bayly
Subject: BC210441: Robert Hastie Drive Mangawhai
Message:

Hi,

Thanks for the landscape plan, have added it to file. I still need evidence of compliance with clauses 1(xii) and (xv) as the committee are not the consent authority in regard to this notice.

Please can you provide an amended plan showing firefighting water supply included and the engineers (presumably) Wiley Geotechnical stormwater design.

Matthew Bayly
Planning Team
Kaipara District Council
Unit 6 - The Hub, 6 Molesworth Drive, Mangawhai 0505
P: (09) 439 3123 | E: buildingsupport@kaipara.govt.nz | W: www.kaipara.govt.nz

==========

Good afternoon,

Please find attached landscape plan. This was approved by the Sanctuary committee satisfying clause 1 (xii) and (xv) - see attached email and letter

Demonstrating compliance with clause 1(iii) of consent notice 12012486.3 by providing an addendum compliance assessment supported by a suitably qualified and experienced landscape architect. The support landscape architect statement should also include comment on clauses 1 xiii and xiv, Please demonstrate compliance with clause 1(xii) and (xv).

Lisa Fletcher

Project Manager

[cid:9f2cf6b9-6b25-40ef-ab9d-98f4bd0b3e05]

[cid:424bfed5-1d61-4e6e-b77e-9ca1d35fe362] 021 0221 0567

[cid:0d77ebb6-cfd9-418b-8166-ecb054d86af7] lisa@c3bc.co.nz
[cid:9cfd8d5c-6a1b-476a-985d-cea33469cb9a] https://www.c3bc.co.nz
[cid:d03d561a-ea77-4602-acb5-78114f381044] [cid:4e719e36-aaf9-40a9-90fe-63a66320b871]
[cid:43c8c34a-80d0-403c-93ed-3f4ce6f4483d]

Want to schedule a meeting.. click here for my availability HERE.

The information in this email and any attached files is confidential and/or legally privileged. It is intended solely for the use of the individual or entity to which it is addressed. Access to this email by anyone else is not authorised. Any distribution, disclosure, copying out or use of this communication by anyone else than the addressee is prohibited and may be unlawful. Should you receive this email by mistake please notify the sender immediately and then delete this email from your system. Whilst we have taken reasonable precautions to ensure that this e-mail and any attachment has been checked for viruses, we cannot guarantee that they are virus free and we cannot accept liability for any damage sustained as a result of software viruses. We would advise that you carry out your own virus checks, especially before opening an attachment

---

From: Kaipara District Council
Sent: Thursday, July 8, 2021 4:10 PM
To: Lisa Fletcher
Subject: BC210441.1 Request For Further Information - RMA - Robert Hastie Drive Mangawhai

Hi,

Please see attached a Request for Further Information (RFI) for this project. This RFI is regarding compliance with consent notices, no breaches of the District Plan were identified.

Reference Number: BC210441
Project Location: Robert Hastie Drive, Mangawhai
Project Description: New Single Storey 4 Bedroom Dwelling with Attached Double Garage and Swimming Pool

Processing of your PIM / Building Consent application is currently in progress. The attached letter details information which is required to be provided to demonstrate that the proposed work will comply with the NZ Building Code / Resource Management / District Scheme provisions.

So that your information gets to us as promptly as possible, please:

- ensure you reply directly to this email;
- only provide information specifically relating to this project;
- all attachments must be saved in PDF format;

By doing this you will keep your project moving as the information will be delivered directly to the processor - thank you for helping us to help you!

Matthew Bayly
Planning Team
Kaipara District Council
Unit 6 - The Hub, 6 Molesworth Drive, Mangawhai 0505
P: (09) 439 3123 | E: buildingsupport@kaipara.govt.nz | W: www.kaipara.govt.nz

---

DISCLAIMER

This message is for the designated recipient(s) only, and may contain confidential and/or privileged information.
If you have received it in error, please delete it and advise the sender immediately.
You should not copy or use it for any other purpose, nor disclose its contents to any other person.

Designated Recipient(s): lisa@c3bc.co.nz

Sent From: AlphaOne Building Consent System

Sent Date: 8 July 2021 16:10 - Thursday

Email #168100: BC210441

Project ID: 210441
Date Sent: 2021-07-12 16:10:05
Recipient: lisa@c3bc.co.nz
Sender: AlphaOne System
Subject: RE: Re: BC210441: Robert Hastie Drive Mangawhai
Message:

Hello

Thank you for your message regarding your application with Kaipara District Council. This is an automated response to confirm your message has been received by the assigned officer for review. You can expect a response within 5 working days.

We accept email attachments in PDF, JPG and PNG format.

ACCEPTED ATTACHMENTS:

- Outlook-nn42c0pd.png.pdf (28.32kB)
- Outlook-sktdhad1.png.pdf (2.40kB)
- Outlook-fs2jl3ek.png.pdf (2.38kB)
- Outlook-s5gfa4zm.png.pdf (2.27kB)
- Outlook-in0av0sg.png.pdf (2.13kB)
- Outlook-2jjaepfp.png.pdf (2.25kB)
- Outlook-3xboe4rq.png.pdf (2.99kB)
- Kendall - Lot 81 The Sanctuary - Amended Sheets 12.07.2021.pdf (384.91kB)
- Kendall - On-site wastewater.pdf (7.26MB)

For further information or enquiries please email 210441@kdc.abcs.co.nz.

Kind regards

Kaipara District Council
Unit 6 - The Hub
6 Molesworth Drive
Mangawhai 0505
www.kaipara.govt.nz

Email #168142: BC210441

Project ID: 210441
Date Sent: 2021-07-13 09:31:57
Recipient: mbayly@kaipara.govt.nz
Sender: Shalisha Blom
Subject: BC210441: A new email has been allocated to you
Message:

Hello Matthew Bayly,

A new email for BC210441 has been allocated to you. Please check and take appropriate action.

https://kdc.abcs.co.nz/jobs/210441/communication/?optilbox

— AlphaOne System

Email #168189: BC210441

Project ID: 210441
Date Sent: 2021-07-13 11:26:05
Recipient: lisa@c3bc.co.nz
Sender: Matthew Bayly
Subject: BC210441: Robert Hastie Drive Mangawhai
Message:

Thanks,

I have added the plan showing the firefighting water to the file, I don't see any stormwater specifications in the wastewater report. Am i missing something?

Matthew Bayly
Planning Team
Kaipara District Council
Unit 6 - The Hub, 6 Molesworth Drive, Mangawhai 0505
P: (09) 439 3123 | E: buildingsupport@kaipara.govt.nz | W: www.kaipara.govt.nz

==========

HI Matthew,

Apologies, these are now attached.

Lisa Fletcher

Project Manager

[cid:ba03ce84-fc77-48ef-bad5-c8257edb1c3d]

[cid:3ff5b76f-0ca8-40dc-b9ee-cb8f7d6f54ce] 021 0221 0567

[cid:558d65c0-9b76-47d5-8b46-a2c40ca13bcc] lisa@c3bc.co.nz
[cid:1a66ec2b-b692-4fba-86a1-6fed3ef962ab] https://www.c3bc.co.nz
[cid:9ed96a8b-a512-482e-9519-5465e1fc79b3] [cid:87a626bc-1c81-42b6-ae7d-c848dc851f18]
[cid:1087008d-794b-4c81-80ec-71ebcca2ddef]

Want to schedule a meeting.. click here for my availability HERE.

The information in this email and any attached files is confidential and/or legally privileged. It is intended solely for the use of the individual or entity to which it is addressed. Access to this email by anyone else is not authorised. Any distribution, disclosure, copying out or use of this communication by anyone else than the addressee is prohibited and may be unlawful. Should you receive this email by mistake please notify the sender immediately and then delete this email from your system. Whilst we have taken reasonable precautions to ensure that this e-mail and any attachment has been checked for viruses, we cannot guarantee that they are virus free and we cannot accept liability for any damage sustained as a result of software viruses. We would advise that you carry out your own virus checks, especially before opening an attachment

_____

From: Kaipara District Council
Sent: Monday, July 12, 2021 3:39 PM
To: Lisa Fletcher
Subject: BC210441: Robert Hastie Drive Mangawhai

Hi,

Thanks for the landscape plan, have added it to file. I still need evidence of compliance with clauses 1(xii) and (xv) as the committee are not the consent authority in regard to this notice.

Please can you provide an amended plan showing firefighting water supply included and the engineers (presumably) Wiley Geotechnical stormwater design.

Matthew Bayly
Planning Team
Kaipara District Council
Unit 6 - The Hub, 6 Molesworth Drive, Mangawhai 0505
P: (09) 439 3123 | E: buildingsupport@kaipara.govt.nz | W: www.kaipara.govt.nz

==========

Good afternoon,

Please find attached landscape plan. This was approved by the Sanctuary committee satisfying clause 1 (xii) and (xv) aEURO" see attached email and letter

Demonstrating compliance with clause 1(iii) of consent notice 12012486.3 by providing an addendum compliance assessment supported by a suitably qualified and experienced landscape architect. The support landscape architect statement should also include comment on clauses 1 xiii and xiv, Please demonstrate compliance with clause 1(xii) and (xv).

Lisa Fletcher

Project Manager

[cid:9f2cf6b9-6b25-40ef-ab9d-98f4bd0b3e05]

[cid:424bfed5-1d61-4e6e-b77e-9ca1d35fe362] 021 0221 0567

[cid:0d77ebb6-cfd9-418b-8166-ecb054d86af7] lisa@c3bc.co.nz
[cid:9cfd8d5c-6a1b-476a-985d-cea33469cb9a] https://www.c3bc.co.nz
[cid:d03d561a-ea77-4602-acb5-78114f381044] [cid:4e719e36-aaf9-40a9-90fe-63a66320b871]
[cid:43c8c34a-80d0-403c-93ed-3f4ce6f4483d]

Want to schedule a meeting.. click here for my availability HERE.

The information in this email and any attached files is confidential and/or legally privileged. It is intended solely for the use of the individual or entity to which it is addressed. Access to this email by anyone else is not authorised. Any distribution, disclosure, copying out or use of this communication by anyone else than the addressee is prohibited and may be unlawful. Should you receive this email by mistake please notify the sender immediately and then delete this email from your system. Whilst we have taken reasonable precautions to ensure that this e-mail and any attachment has been checked for viruses, we cannot guarantee that they are virus free and we cannot accept liability for any damage sustained as a result of software viruses. We would advise that you carry out your own virus checks, especially before opening an attachment

---

From: Kaipara District Council
Sent: Thursday, July 8, 2021 4:10 PM
To: Lisa Fletcher
Subject: BC210441.1 Request For Further Information - RMA - Robert Hastie Drive Mangawhai

Hi,

Please see attached a Request for Further Information (RFI) for this project. This RFI is regarding compliance with consent notices, no breaches of the District Plan were identified.

Reference Number: BC210441
Project Location: Robert Hastie Drive, Mangawhai
Project Description: New Single Storey 4 Bedroom Dwelling with Attached Double Garage and Swimming Pool

Processing of your PIM / Building Consent application is currently in progress. The attached letter details information which is required to be provided to demonstrate that the proposed work will comply with the NZ Building Code / Resource Management / District Scheme provisions.

So that your information gets to us as promptly as possible, please:

- ensure you reply directly to this email;

- only provide information specifically relating to this project;
- all attachments must be saved in PDF format;

By doing this you will keep your project moving as the information will be delivered directly to the processor - thank you for helping us to help you!

Matthew Bayly
Planning Team
Kaipara District Council
Unit 6 - The Hub, 6 Molesworth Drive, Mangawhai 0505
P: (09) 439 3123 | E: buildingsupport@kaipara.govt.nz | W: www.kaipara.govt.nz

_____

DISCLAIMER

This message is for the designated recipient(s) only, and may contain confidential and/or privileged information.
If you have received it in error, please delete it and advise the sender immediately.
You should not copy or use it for any other purpose, nor disclose its contents to any other person.

Designated Recipient(s): lisa@c3bc.co.nz

Sent From: AlphaOne Building Consent System

Sent Date: 8 July 2021 16:10 - Thursday

_____

_____

DISCLAIMER
This message is for the designated recipient(s) only, and may contain confidential and/or privileged information. If you have received it in error, please delete it and advise the sender immediately. You should not copy or use it for any other purpose, nor disclose its contents to any other person.

Designated Recipient(s): lisa@c3bc.co.nz
Sent From: AlphaOne Building Consent System
Sent Date: 12 July 2021 15:39:38 pm - Monday

Email #168239: BC210441

Project ID: 210441
Date Sent: 2021-07-13 15:00:19
Recipient: lisa@c3bc.co.nz
Sender: AlphaOne System
Subject: RE: Re: BC210441: Robert Hastie Drive Mangawhai
Message:

Hello

Thank you for your message regarding your application with Kaipara District Council. This is an automated response to confirm your message has been received by the assigned officer for review. You can expect a response within 5 working days.

We accept email attachments in PDF, JPG and PNG format.

ACCEPTED ATTACHMENTS:

- Outlook-1ufrnxar.png.pdf (28.32kB)
- Outlook-mj1rdht2.png.pdf (2.40kB)
- Outlook-qt3d030t.png.pdf (2.38kB)
- Outlook-wqmig524.png.pdf (2.27kB)
- Outlook-hxdzpigu.png.pdf (2.13kB)
- Outlook-jzrkrhin.png.pdf (2.25kB)
- Outlook-friqhy05.png.pdf (2.99kB)
- Pages From Kendall - Manufacturer Docs.pdf (1.33MB)

For further information or enquiries please email 210441@kdc.abcs.co.nz.

Kind regards

Kaipara District Council
Unit 6 - The Hub
6 Molesworth Drive
Mangawhai 0505
www.kaipara.govt.nz

Email #168242: BC210441

Project ID: 210441
Date Sent: 2021-07-13 15:06:23
Recipient: mbayly@kaipara.govt.nz
Sender: Greg Bellam
Subject: BC210441: A new email has been allocated to you
Message:

Hello Matthew Bayly,

A new email for BC210441 has been allocated to you. Please check and take appropriate action.

https://kdc.abcs.co.nz/jobs/210441/communication/?optilbox

— AlphaOne System

Email #168262: BC210441

Project ID: 210441
Date Sent: 2021-07-13 15:31:35
Recipient: lisa@c3bc.co.nz
Sender: Matthew Bayly
Subject: BC210441: Robert Hastie Drive Mangawhai
Message:

Hi,

No, the consent notice requires a stormwater engineered design, if you haven't commissioned this, please do so.

Matthew Bayly
Planning Team
Kaipara District Council
Unit 6 - The Hub, 6 Molesworth Drive, Mangawhai 0505
P: (09) 439 3123 | E: buildingsupport@kaipara.govt.nz | W: www.kaipara.govt.nz

==========

Heya,

Is this the one you mean ?

Lisa Fletcher

Project Manager

[cid:00f83c1f-97b1-468b-9f8d-dbf97e30ab50]

[cid:6651ed6a-b645-471e-886f-f7338bab9020] 021 0221 0567

[cid:2dc7a20c-048f-4400-947f-7e927bafea91] lisa@c3bc.co.nz
[cid:1ed22f54-e694-4944-b015-97f0a899122d] https://www.c3bc.co.nz
[cid:512d6fb3-a405-46bf-9301-5a999e4436a1] [cid:bcae433b-58cc-4a8e-91e9-efc88b3deccf]
[cid:bce72862-a715-46a8-a511-91de12b98596]

Want to schedule a meeting.. click here for my availability HERE.

The information in this email and any attached files is confidential and/or legally privileged. It is intended solely for the use of the individual or entity to which it is addressed. Access to this email by anyone else is not authorised. Any distribution, disclosure, copying out or use of this communication by anyone else than the addressee is prohibited and may be unlawful. Should you receive this email by mistake please notify the sender immediately and then delete this email from your system. Whilst we have taken reasonable precautions to ensure that this e-mail and any attachment has been checked for viruses, we cannot guarantee that they are virus free and we cannot accept liability for any damage sustained as a result of software viruses. We would advise that you carry out your own virus checks, especially before opening an attachment

---

From: Kaipara District Council
Sent: Tuesday, July 13, 2021 11:26 AM
To: Lisa Fletcher
Subject: BC210441: Robert Hastie Drive Mangawhai

Thanks,

I have added the plan showing the firefighting water to the file, I don't see any stormwater specifications in the wastewater report. Am i missing something?

Matthew Bayly
Planning Team
Kaipara District Council
Unit 6 - The Hub, 6 Molesworth Drive, Mangawhai 0505
P: (09) 439 3123 | E: buildingsupport@kaipara.govt.nz | W: www.kaipara.govt.nz

==========

HI Matthew,

Apologies, these are now attached.

Lisa Fletcher

Project Manager

[cid:ba03ce84-fc77-48ef-bad5-c8257edb1c3d]

[cid:3ff5b76f-0ca8-40dc-b9ee-cb8f7d6f54ce] 021 0221 0567

[cid:558d65c0-9b76-47d5-8b46-a2c40ca13bcc] lisa@c3bc.co.nz
[cid:1a66ec2b-b692-4fba-86a1-6fed3ef962ab] https://www.c3bc.co.nz
[cid:9ed96a8b-a512-482e-9519-5465e1fc79b3] [cid:87a626bc-1c81-42b6-ae7d-c848dc851f18]
[cid:1087008d-794b-4c81-80ec-71ebcca2ddef]

Want to schedule a meeting.. click here for my availability HERE.

The information in this email and any attached files is confidential and/or legally privileged. It is intended solely for the use of the individual or entity to which it is addressed. Access to this email by anyone else is not authorised. Any distribution, disclosure, copying out or use of this communication by anyone else than the addressee is prohibited and may be unlawful. Should you receive this email by mistake please notify the sender immediately and then delete this email from your system. Whilst we have taken reasonable precautions to ensure that this e-mail and any attachment has been checked for viruses, we cannot guarantee that they are virus free and we cannot accept liability for any damage sustained as a result of software viruses. We would advise that you carry out your own virus checks, especially before opening an attachment

_____

From: Kaipara District Council
Sent: Monday, July 12, 2021 3:39 PM
To: Lisa Fletcher
Subject: BC210441: Robert Hastie Drive Mangawhai

Hi,

Thanks for the landscape plan, have added it to file. I still need evidence of compliance with clauses 1(xii) and (xv) as the committee are not the consent authority in regard to this notice.

Please can you provide an amended plan showing firefighting water supply included and the engineers (presumably) Wiley Geotechnical stormwater design.

Matthew Bayly
Planning Team
Kaipara District Council
Unit 6 - The Hub, 6 Molesworth Drive, Mangawhai 0505
P: (09) 439 3123 | E: buildingsupport@kaipara.govt.nz | W: www.kaipara.govt.nz

==========

Good afternoon,

Please find attached landscape plan. This was approved by the Sanctuary committee satisfying clause 1 (xii) and (xv) a''' see attached email and letter

Demonstrating compliance with clause 1(iii) of consent notice 12012486.3 by providing an addendum compliance assessment supported by a suitably qualified and experienced landscape architect. The support landscape architect statement should also include comment on clauses 1 xiii and xiv, Please demonstrate compliance with clause 1(xii) and (xv).

Lisa Fletcher

Project Manager

[cid:9f2cf6b9-6b25-40ef-ab9d-98f4bd0b3e05]

[cid:424bfed5-1d61-4e6e-b77e-9ca1d35fe362] 021 0221 0567

[cid:0d77ebb6-cfd9-418b-8166-ecb054d86af7] lisa@c3bc.co.nz
[cid:9cfd8d5c-6a1b-476a-985d-cea33469cb9a] https://www.c3bc.co.nz
[cid:d03d561a-ea77-4602-acb5-78114f381044] [cid:4e719e36-aaf9-40a9-90fe-63a66320b871]
[cid:43c8c34a-80d0-403c-93ed-3f4ce6f4483d]

Want to schedule a meeting.. click here for my availability HERE.

The information in this email and any attached files is confidential and/or legally privileged. It is intended solely for the use of the individual or entity to which it is addressed. Access to this email by anyone else is not authorised. Any distribution, disclosure, copying out or use of this communication by anyone else than the addressee is prohibited and may be unlawful. Should you receive this email by mistake please notify the sender immediately and then delete this email from your system. Whilst we have taken reasonable precautions to ensure that this e-mail and any attachment has been checked for viruses, we cannot guarantee that they are virus free and we cannot accept liability for any damage sustained as a result of software viruses. We would advise that you carry out your own virus checks, especially before opening an attachment

---

From: Kaipara District Council
Sent: Thursday, July 8, 2021 4:10 PM
To: Lisa Fletcher
Subject: BC210441.1 Request For Further Information - RMA - Robert Hastie Drive Mangawhai

Hi,

Please see attached a Request for Further Information (RFI) for this project. This RFI is regarding compliance with consent notices, no breaches of the District Plan were identified.

Reference Number: BC210441
Project Location: Robert Hastie Drive, Mangawhai
Project Description: New Single Storey 4 Bedroom Dwelling with Attached Double Garage and Swimming Pool

Processing of your PIM / Building Consent application is currently in progress. The attached letter details information which is required to be provided to demonstrate that the proposed work will comply with the NZ Building Code / Resource Management / District Scheme provisions.

So that your information gets to us as promptly as possible, please:

- ensure you reply directly to this email;
- only provide information specifically relating to this project;
- all attachments must be saved in PDF format;

By doing this you will keep your project moving as the information will be delivered directly to the processor - thank you for helping us to help you!

Matthew Bayly
Planning Team
Kaipara District Council
Unit 6 - The Hub, 6 Molesworth Drive, Mangawhai 0505
P: (09) 439 3123 | E: buildingsupport@kaipara.govt.nz | W: www.kaipara.govt.nz

---

DISCLAIMER

This message is for the designated recipient(s) only, and may contain confidential and/or privileged information.
If you have received it in error, please delete it and advise the sender immediately.
You should not copy or use it for any other purpose, nor disclose its contents to any other person.

Designated Recipient(s): lisa@c3bc.co.nz

Sent From: AlphaOne Building Consent System

Sent Date: 8 July 2021 16:10 - Thursday

DISCLAIMER
This message is for the designated recipient(s) only, and may contain confidential and/or privileged information. If you have received it in error, please delete it and advise the sender immediately. You should not copy or use it for any other purpose, nor disclose its contents to any other person.

Designated Recipient(s): lisa@c3bc.co.nz
Sent From: AlphaOne Building Consent System
Sent Date: 12 July 2021 15:39:38 pm - Monday

DISCLAIMER
This message is for the designated recipient(s) only, and may contain confidential and/or privileged information. If

you have received it in error, please delete it and advise the sender immediately. You should not copy or use it for any other purpose, nor disclose its contents to any other person.

Designated Recipient(s): lisa@c3bc.co.nz
Sent From: AlphaOne Building Consent System
Sent Date: 13 July 2021 11:26:03 am - Tuesday

Email #168336: BC210441

Project ID: 210441
Date Sent: 2021-07-14 11:06:11
Recipient: allocations@complynz.co.nz
Sender: Kerry Hewson
Subject: BC210441: A new job for you
Message:

Hello ComplyNZ,

BC210441 has been allocated to you. Please check and take appropriate action.

https://kdc.abcs.co.nz/jobs/210441

— AlphaOne System

Email #168339: BC210441

Project ID: 210441
Date Sent: 2021-07-14 11:16:07
Recipient: sharon.campbell@complynz.co.nz
Sender: Sandie MacLean
Subject: BC210441: A new job for you
Message:

Hello Sharon Campbell,

BC210441 has been allocated to you. Please check and take appropriate action.

https://kdc.abcs.co.nz/jobs/210441

— AlphaOne System

Email #168634: BC210441

Project ID: 210441
Date Sent: 2021-07-16 14:00:17
Recipient: lisa@c3bc.co.nz
Sender: Sharon Martin
Subject: BC210441.1 PIM - Robert Hastie Drive Mangawhai
Message:

Dear Sir/Madam,

Reference Number: BC210441.1

PIM

Attached is a copy of the issued Project Information Memorandum (PIM)

This is not approval to build.

If you have any questions regarding the attached documents please contact the Planning Team at rmaconsents@kaipara.govt.nz

Consent Notice 8509265.4 12012486.1 12012486.3
Please ensure all / any consent notices pertaining to this site have been complied with before starting any building work.

The Council recommends that you seek your own legal advice in relation to any breach/es of the consent notice, and the potential consequences of this.

Vehicle Crossing

Please note if a vehicle crossing is applicable, please forward completed documents to: council@kaipara.govt.nz with confirmation of your payment.

All inspections of Vehicle crossings will be undertaken by Roading.

For booking inspections or any relevant inquires contact can be made directly to the above email address.

Street Numbering:

It has been recognised that while you have a street address, this number is not registered with Land Information New Zealand. In an Emergency situation it may make it difficult for First Response Services to find your property. Therefore, it is recommended that you apply for a rapid/urban number; See below for actions if you wish to apply for

a registered number:
Our system shows that the property does not have a registered Council street number. Please provide the rapid/urban address of the property. The process and forms are available on our website https://www.kaipara.govt.nz

Processing will not be held up for this purpose, but a block has been put on inspections until you advise us of this number after you have received it by replying to this email. The block will then be removed.
Forward completed documents to: council@kaipara.govt.nz
There are two main reasons an address is required:
1. Because the Code Compliance Certificate must be issued to a legal property address, not to a Lot number or a road only. We have been asked many times to reissue a CCC when the address has been obtained.
2. Inspectors need a numbered address to find the building.

Kind regards
Sharon Martin

Kaipara District Council
Unit 6 - The Hub, 6 Molesworth Drive, Mangawhai 0505
P: (09) 439 3123 | E: buildingsupport@kaipara.govt.nz | W: www.kaipara.govt.nz

Email #168958: BC210441

Project ID: 210441
Date Sent: 2021-07-20 10:55:05
Recipient: lisa@c3bc.co.nz
Sender: AlphaOne System
Subject: RE: Fw: BC210441: Robert Hastie Drive Mangawhai
Message:

Hello

Thank you for your message regarding your application with Kaipara District Council. This is an automated response to confirm your message has been received by the assigned officer for review. You can expect a response within 5 working days.

We accept email attachments in PDF, JPG and PNG format.

ACCEPTED ATTACHMENTS:

- Outlook-pkgbbocs.png.pdf (28.32kB)
- Outlook-okee1sen.png.pdf (2.40kB)
- Outlook-ya225ozs.png.pdf (2.38kB)
- Outlook-45wdf4pl.png.pdf (2.27kB)
- Outlook-0pah3ota.png.pdf (2.13kB)
- Outlook-qhaghbx0.png.pdf (2.25kB)
- Outlook-jojynemt.png.pdf (2.99kB)
- Kendall - On-site wastewater.pdf (7.65MB)
- Kendall - Lot 81 The Sanctuary - Amended Sheets 19.07.2021.pdf (388.89kB)

For further information or enquiries please email 210441@kdc.abcs.co.nz.

Kind regards

Kaipara District Council
Unit 6 - The Hub
6 Molesworth Drive
Mangawhai 0505
www.kaipara.govt.nz

Email #169091: BC210441

Project ID: 210441
Date Sent: 2021-07-21 10:41:10
Recipient: mbayly@kaipara.govt.nz
Sender: Shalisha Blom
Subject: BC210441: A new email has been allocated to you
Message:

Hello Matthew Bayly,

A new email for BC210441 has been allocated to you. Please check and take appropriate action.

https://kdc.abcs.co.nz/jobs/210441/communication/?optilbox

— AlphaOne System

Email #169116: BC210441

Project ID: 210441
Date Sent: 2021-07-21 11:45:55
Recipient: lisa@c3bc.co.nz
Sender: Matthew Bayly
Subject: BC210441: Robert Hastie Drive Mangawhai
Message:

Hi Lisa,

Thanks for sending that in.

Matthew Bayly
Planning Team
Kaipara District Council
Unit 6 - The Hub, 6 Molesworth Drive, Mangawhai 0505
P: (09) 439 3123 | E: buildingsupport@kaipara.govt.nz | W: www.kaipara.govt.nz

==========

Good morning,

Please find attached updated Wiley Report and my site plans to suit for the stormwater

Lisa Fletcher

Project Manager

[cid:8f3524d8-9125-4671-b4d0-cefa41ca1607]

[cid:e8449a62-c1e5-41dc-a901-c1f143050783] 021 0221 0567

[cid:bf2a6fdd-89d7-4e27-b4aa-8944031a4ad0] lisa@c3bc.co.nz
[cid:77cab527-5f4c-40c1-bc7c-676d1d3d0daf] https://www.c3bc.co.nz
[cid:dab357ca-9c00-4ace-abf4-f9d327ed9feb] [cid:099bcd6b-1e37-47fc-9c94-e62012c7d456]
[cid:3200a7f8-d98c-4022-b03a-9fdcec1a8878]

Want to schedule a meeting.. click here for my availability HERE.

The information in this email and any attached files is confidential and/or legally privileged. It is intended solely for the use of the individual or entity to which it is addressed. Access to this email by anyone else is not authorised. Any distribution, disclosure, copying out or use of this communication by anyone else than the addressee is prohibited and may be unlawful. Should you receive this email by mistake please notify the sender immediately and then delete this email from your system. Whilst we have taken reasonable precautions to ensure that this e-mail and any attachment has been checked for viruses, we cannot guarantee that they are virus free and we cannot accept liability for any damage sustained as a result of software viruses. We would advise that you carry out your own virus checks, especially before opening an attachment

---

From: Kaipara District Council
Sent: Tuesday, July 13, 2021 3:31 PM
To: Lisa Fletcher
Subject: BC210441: Robert Hastie Drive Mangawhai

Hi,

No, the consent notice requires a stormwater engineered design, if you haven't commissioned this, please do so.

Matthew Bayly
Planning Team
Kaipara District Council
Unit 6 - The Hub, 6 Molesworth Drive, Mangawhai 0505
P: (09) 439 3123 | E: buildingsupport@kaipara.govt.nz | W: www.kaipara.govt.nz

==========

Heya,

Is the attached the one you mean ?

Lisa Fletcher

Project Manager

C3BC Ltd

From: Kaipara District Council
Sent: Tuesday, July 13, 2021 11:26 AM
To: Lisa Fletcher
Subject: BC210441: Robert Hastie Drive Mangawhai

Thanks,

I have added the plan showing the firefighting water to the file, I don't see any stormwater specifications in the wastewater report. Am i missing something?

Matthew Bayly
Planning Team
Kaipara District Council
Unit 6 - The Hub, 6 Molesworth Drive, Mangawhai 0505
P: (09) 439 3123 | E: buildingsupport@kaipara.govt.nz | W: www.kaipara.govt.nz

==========

Email #169500: BC210441

Project ID: 210441
Date Sent: 2021-07-23 14:55:47
Recipient: lisa@c3bc.co.nz
Sender: Sharon Campbell
Subject:
BC210441.1 Request For Further Information - Robert Hastie Drive Mangawhai
Message:
Good afternoon,

Reference Number: BC210441
Project Location: Robert Hastie Drive, Mangawhai
Project Description: New Single Storey 4 Bedroom Dwelling with Attached Double Garage and Swimming Pool

Processing of your building consent application in accordance with s48 of the Building Act is currently in progress. The attached letter details information which is required to be provided to demonstrate that the proposed work will comply with s 48 of the NZ Building Act and Regulations. Please note that the processing time clock has been suspended pending this information.

So that your information gets to us as promptly as possible, please:
- ensure you reply directly to this email and the format of our email address must be in full as follows: 210441@kdc.abcs.co.nz
- provide only the information that specifically relates to this project;
- ensure that all attachments are saved in PDF format;

Following the above will keep your project moving and ensure the information is delivered directly to the processor. To speed up processing we would request that changes to plans are marked using the "cloud" convention - thank you for helping us to help you!

Please feel free to contact me after you have read through the items if you need clarification or have any further questions.

Kind regards,

Sharon Campbell
Contractor 022 697 5120
Kaipara District Council
Unit 6 - The Hub, 6 Molesworth Drive, Mangawhai 0505

P: (09) 439 3123 | E: buildingsupport@kaipara.govt.nz | W: www.kaipara.govt.nz

Email #171873: BC210441

Project ID: 210441
Date Sent: 2021-08-21 14:40:11
Recipient: marc@cadetailer.co.nz
Sender: AlphaOne System
Subject:
RE: FW: BC210441.1 Request For Further Information - Robert Hastie Drive Mangawhai
Message:
Hello

Thank you for your message regarding your application with Kaipara District Council. This is an automated response to confirm your message has been received by the assigned officer for review. You can expect a response within 5 working days.

We accept email attachments in PDF, JPG and PNG format.

ACCEPTED ATTACHMENTS:
- EZ panel details.pdf (3.07MB)
- dryden-cleaning-and-maintenance_october-2017.pdf (120.16kB)
- GIB-Bracing-Supplement-Dec-2016.pdf (3.03MB)
- GIB Ezybrace Calculations.pdf (423.84kB)
- Kendall - Additional Manufacturer Docs.pdf (717.76kB)
- Documents lodged.png.pdf (28.77kB)
- 21076_Rev1_Lot 81 The Sanctuary Mangawhai.pdf (1.33MB)
- Kendall - Additional Specification.pdf (63.56kB)
- Hawthorn Geddes confirmation.pdf (99.85kB)
- Kendall - Lot 81 The Sanctuary - Amended Sheets 18.08.2021.pdf (3.32MB)
- rpt 190820 engineering suitability R6 signed.pdf (2.99MB)

REJECTED ATTACHMENTS:
- LT 556753.tif (2.30MB)

For further information or enquiries please email 210441@kdc.abcs.co.nz.

Kind regards

Kaipara District Council
Unit 6 - The Hub
6 Molesworth Drive

Mangawhai 0505

www.kaipara.govt.nz

Email #171894: BC210441

Project ID: 210441
Date Sent: 2021-08-22 11:07:44
Recipient: sharon.campbell@complynz.co.nz
Sender: Greg Bellam
Subject: BC210441: A new email has been allocated to you
Message:

Hello Sharon Campbell,

A new email for BC210441 has been allocated to you. Please check and take appropriate action.

https://kdc.abcs.co.nz/jobs/210441/communication/?optilbox

— AlphaOne System

Email #172095: BC210441

Project ID: 210441
Date Sent: 2021-08-25 10:25:15
Recipient: marc@cadetailer.co.nz
Sender: Sharon Campbell
Subject: BC210441: Robert Hastie Drive Mangawhai
Message:

Good morning Marc,

I'm working through the RFI response.
I see you have revised sheet 701 but I don't seem to have received a copy.

Can you please send this through at your earliest convenience.

Kind regards,

Sharon Campbell
Contractor
Kaipara District Council
Unit 6 - The Hub, 6 Molesworth Drive, Mangawhai 0505
P: (09) 439 3123 | E: buildingsupport@kaipara.govt.nz | W: www.kaipara.govt.nz

==========

Hi Sharon,
Please find below response to your queries in red with associated attachments.
Section 45: Consent Documents
RFI 1: I have identified other means of compliance within the consent documentation. Please confirm these are correct:
E2 - Alt sol
Yes
E3 - Alt - Gib Aqualine
AS2 as per GIB Wet Area Systems manual
G13/AS3/VM4
AS3
Site Considerations
RFI 1: Please show on the elevations the contours and slopes surrounding the dwelling.
Building platform is cut and filled to level. Elevation E-03 is only elevation with surrounding land that slopes away, this

is level for 1m from the footing edge then slopes away. Site Plan supports this with rock wall and batter line. Existing ground levels shown dashed on elevations.
Miscellaneous - Other
RFI 1: The consent notice specifies the proposed buildings for Lot 81 must be located within the identified building areas shown on the Plan - building site N. Please provide evidence the proposed dwelling is within this area.
N shown on site plans. Please find attached Survey plan confirming.
B1: Footings, Foundations (In-situ, masonry, SED)
RFI 1: Expansive soils is outside the scope of the Firth Ribraft Technical manual. The geotech report also notes that although a waffle slab is suitable, the foundation needs to be designed for expansive soils to AS2870. The consent notice requires building foundations to be the subject of specific engineering design by a suitably qualified Chartered Professional Engineer, taking into account the recommendations of the Hawthorn Geddes report dated 12 July 2019. Please have a Chartered Professional Engineer review the design and provide calculations and PS1 to support the design. He will also need to review both geotechnical reports and reference this on his PS1. RFI 1: Please provide a copy of the Engineering Suitability report by Hawthorn Geddes dated 12 July 2019. Please also supply a copy to Wiley Geotechnical Consultants Ltd for their information should they need to revise any of their report.
Please find attached updated Geotech report stating that Specific engineering design and a PS1 is not required. Please also find attached the Hawthorn Geddes report requested. Please note the Wiley Geotechnical Report now overrides this as the Hawthorn Geddes Report was not suitable to support a building consent for any individual lot. This was confirmed by an Hawthorn Geddes Geotechnical Engineer.
B1: Walls, Wall bracing, Posts, Beams
RFI 1: The wall bracing design does not demonstrate compliance. Please provide the following additional information.
A. Diaphragm is longer than 12m and design is outside scope of NZS3604:2011 requirements for diaphragms (see NZS3604:2011 5.6.1 - Diaphragms may be used to distribute horizontal loads. They shall be no
longer than 12 m with an aspect ratio (length divided by width) no greater
than 2. Diaphragms shall be directly connected to bracing elements and
consist of either:
(a) A floor diaphragm complying with 7.3; or
(b) A ceiling diaphragm complying with 13.5.)
Please revise design or have a Chartered Professional Engineer review the design and provide a PS1 along with supporting docs.
Diaphragm is under 12m as shown on amended sheet 503.

B. Provide separated bracing calculations for the wing section of the dwelling as per NZS3604:2011 5.1.5, or alternatively have a CPEng review the entire bracing, provide calculations and PS1 to support the design for one set of bracing. (Note: you may also wish to used Gib Ezybrace system which has another alternative ref Gib bracing supplement attached to this RFI. We would need to see the calcs on the Gib Ezybrace software sheet and the percentages of bracing per wing).
Please find attached amended sheet 503 & GIB Ezybrace calculations. Please remove sheet 803 from set.

RFI 1: Please specify post to beam fixing detail to ensure there is allowance for uplift as per NZS3604:2011 Sec 9.
Please find attached revised sheet 707
RFI 1: Please ensure structural engineer reviews and include post footing and connection as shown on sheet 707 - outside scope of NZS3604:2011 and all foundations require CPEng as per consent notice.
Please refer to revised Geotech report, footing designed to NZS3604:2011 and uplift with consideration of pile footing

embedment of the Geotech report. Footing and connection revised to be within scope of NZS3604:2011.

B2: DURABILITY

RFI 1: Sheet 707 - Timber post is noted to be H1.2, framing appears to be acting as cavity battens also noted to be H1.2. There is no building wrap specified. I am concerned this structure will be subject to wetting and the treatment of timber specified is only suitable for dry situations. Please review this structure and provide evidence of compliance with B2.

Please find attached revised sheet 707

RFI 1: Please provide coating and maintenance requirements for the cedar facings (to posts).

Please find attached revised sheets 201, 301-302, 401-403 & 707 along with maintenance guide.

E1: Surface Water

RFI 1: Where the land is sloping towards the dwelling, please show how overland flow will be directed away from the dwelling ensuring this will not affect other properties. This may need to be included in the SW design for the site.

Please find attached revised sheet 101

E1/VM 1: Drainage

RFI 1: Consent notice conditions require stormwater disposal to be designed by a suitable qualified Chartered Professional Engineer. There are specific requirements to the design as noted in the consent notice. Please have a CPEng design the SW disposal, includes calculations, drawings and how 10,000 ltr will be detained for fire fighting purposes and overflow. Ensure the engineer has a copy of all consent notices.

Please find attached updated Geotech report stating that Stormwater attenuation is not required.

E2: Wall Cladding Systems

RFI 1: Please provide manufacturer details for the EZPanel applicable to this consent ie rebated slab edge, door sill to rebated slab, window and door details, corner junctions etc. If details presented in the plan set are different to manufacturer, please provide full summary for the alternative solution presented.

Please find attached manufacturer details to support current details. One detail (02) changed to suit on sheet 701.

F4: Safety from Falling

RFI 1: Due to the height difference between the dwelling FFL and associated decks, and the land contours, please confirm whether any barriers are required to the decks where there may be a fall greater than 1m. Revised elevations may clarify this already.

As mentioned above, site is cut & fill to level, no falls greater than 1m.

F9: Restricting Access to Residential Pools

RFI 1: It appears that there will be extensive planting alongside the pool fencing which may provide climbable objects within 1200mm of the fencing. Please provide evidence of compliance with F9.3.3 - that the barrier is free of permanent objects or projections on the outside that could assist children in negotiating the barrier. (Refer F9/AS1 Fig 2).

F9 represents planting on the outside of the pool. Garden shown is on the inside of the pool which complies.

RFI 1: Please provide further information to demonstrate that where the building forms all or part of an immediate pool area barrier, then windows opening from a building into the immediate pool area are constructed or positioned to restrict the passage of children. W0.01 restrictor stay not specified.

W0.01 now specified to have restrictor stay as shown on amended sheet 801

RFI 1: Please provide manufacturer technical specification for the pool barrier, installation details, PS1 for the glass barrier, pool gates and self closing latches.

This was attached as part of the support documents - see screenshot of documents uploaded to portal attached.

Kind regards

Marc Vale Director | Architectural Designer
[photo-logo]
021 471 119
marc@cadetailer.co.nz
Tauranga, Bay of Plenty

From: Kaipara District Council
Date: 23 July 2021 at 2:55:51 PM NZST
To: Lisa Fletcher
Cc: allocations@complynz.co.nz
Subject: BC210441.1 Request For Further Information - Robert Hastie Drive Mangawhai
?Good afternoon,

Reference Number: BC210441
Project Location: Robert Hastie Drive, Mangawhai
Project Description: New Single Storey 4 Bedroom Dwelling with Attached Double Garage and Swimming Pool

Processing of your building consent application in accordance with s48 of the Building Act is currently in progress. The attached letter details information which is required to be provided to demonstrate that the proposed work will comply with s 48 of the NZ Building Act and Regulations. Please note that the processing time clock has been suspended pending this information.

So that your information gets to us as promptly as possible, please:
- ensure you reply directly to this email and the format of our email address must be in full as follows: 210441@kdc.abcs.co.nz
- provide only the information that specifically relates to this project;
- ensure that all attachments are saved in PDF format;

Following the above will keep your project moving and ensure the information is delivered directly to the processor. To speed up processing we would request that changes to plans are marked using the "cloud" convention - thank you for helping us to help you!

Please feel free to contact me after you have read through the items if you need clarification or have any further questions.

Kind regards,

Sharon Campbell
Contractor 022 697 5120
Kaipara District Council
Unit 6 - The Hub, 6 Molesworth Drive, Mangawhai 0505

P: (09) 439 3123 | E: buildingsupport@kaipara.govt.nz | W: www.kaipara.govt.nz

_____

DISCLAIMER

This message is for the designated recipient(s) only, and may contain confidential and/or privileged information.
If you have received it in error, please delete it and advise the sender immediately.
You should not copy or use it for any other purpose, nor disclose its contents to any other person.

Designated Recipient(s): lisa@c3bc.co.nz

Sent From: AlphaOne Building Consent System

Sent Date: 23 July 2021 14:55 - Friday

REJECTED ATTACHMENT(S):
Note: The listed file(s) below were rejected because they were not in PDF format.
- LT 556753.tif

Email #172097: BC210441

Project ID: 210441
Date Sent: 2021-08-25 10:36:53
Recipient: marc@mvarchitecture.co.nz
Sender: Sharon Campbell
Subject: BC210441: Robert Hastie Drive Mangawhai
Message:

Hello Marc again,

Just further on my query regarding the planting, I'm sorry I had assumed that you had seen the landscape plan and was aware that planting outside the pool barrier and right up against the barrier was planned.
I've attached a copy for your information.

Please have a look and confirm how compliance with F9 will be achieved.

Any questions, please feel free to contact me on 022 697 5120

Kind regards,

Sharon Campbell
Contractor
Kaipara District Council
Unit 6 - The Hub, 6 Molesworth Drive, Mangawhai 0505
P: (09) 439 3123 | E: buildingsupport@kaipara.govt.nz | W: www.kaipara.govt.nz

Email #172105: BC210441

Project ID: 210441
Date Sent: 2021-08-25 11:08:28
Recipient: lisa@c3bc.co.nz, marc@mvarchitecture.co.nz
Sender: Sharon Campbell
Subject:
BC210441.2 Request For Further Information - Robert Hastie Drive Mangawhai
Message:
Good morning,

Reference Number: BC210441
Project Location: Robert Hastie Drive, Mangawhai
Project Description: New Single Storey 4 Bedroom Dwelling with Attached Double Garage and Swimming Pool

Processing of your building consent application in accordance with s48 of the Building Act is currently in progress. The attached letter details information which is required to be provided to demonstrate that the proposed work will comply with s 48 of the NZ Building Act and Regulations. Please note that the processing time clock has been suspended pending this information.

So that your information gets to us as promptly as possible, please:
- ensure you reply directly to this email and the format of our email address must be in full as follows: 210441@kdc.abcs.co.nz
- provide only the information that specifically relates to this project;
- ensure that all attachments are saved in PDF format;

Following the above will keep your project moving and ensure the information is delivered directly to the processor. To speed up processing we would request that changes to plans are marked using the "cloud" convention - thank you for helping us to help you!

Kind regards,

Sharon Campbell
Contractor 022 697 5120
Kaipara District Council
Unit 6 - The Hub, 6 Molesworth Drive, Mangawhai 0505
P: (09) 439 3123 | E: buildingsupport@kaipara.govt.nz | W: www.kaipara.govt.nz

Email #172132: BC210441

Project ID: 210441
Date Sent: 2021-08-25 14:05:14
Recipient: marc@cadetailer.co.nz
Sender: AlphaOne System
Subject: RE: Re: BC210441: Robert Hastie Drive Mangawhai
Message:

Hello

Thank you for your message regarding your application with Kaipara District Council. This is an automated response to confirm your message has been received by the assigned officer for review. You can expect a response within 5 working days.

We accept email attachments in PDF, JPG and PNG format.

REJECTED ATTACHMENTS:
- image001.png (13.91kB)
- image00249.png (176.00B)

The rejected attachment(s) may be from your signature. If not, please contact the AlphaOne Support Team on 0800 625 3284.

For further information or enquiries please email 210441@kdc.abcs.co.nz.

Kind regards

Kaipara District Council
Unit 6 - The Hub
6 Molesworth Drive
Mangawhai 0505
www.kaipara.govt.nz

Email #172134: BC210441

Project ID: 210441
Date Sent: 2021-08-25 14:27:36
Recipient: sharon.campbell@complynz.co.nz
Sender: John Dowden
Subject: BC210441: A new email has been allocated to you
Message:

Hello Sharon Campbell,

A new email for BC210441 has been allocated to you. Please check and take appropriate action.

https://kdc.abcs.co.nz/jobs/210441/communication/?optilbox

— AlphaOne System

Email #172157: BC210441

Project ID: 210441
Date Sent: 2021-08-25 16:50:10
Recipient: marc@cadetailer.co.nz
Sender: AlphaOne System
Subject:
RE: Re: BC210441.2 Request For Further Information - Robert Hastie Drive Mangawhai
Message:
Hello

Thank you for your message regarding your application with Kaipara District Council. This is an automated response to confirm your message has been received by the assigned officer for review. You can expect a response within 5 working days.

We accept email attachments in PDF, JPG and PNG format.

ACCEPTED ATTACHMENTS:
- Glass Outlet VT1 Top Fix.pdf (1.45MB)
- Landscaping Design RFI 25-8-21.pdf (1.01MB)
- POLARIS-HINGE-BROCHURE_REV11_13.08.18-METRIC-WHITE.pdf (925.03kB)
- Kendall - Lot 81 The Sanctuary - Amended Sheets 25.08.2021.pdf (1.38MB)

REJECTED ATTACHMENTS:
- image001.png (13.91kB)
- image00265.png (176.00B)

The rejected attachment(s) may be from your signature. If not, please contact the AlphaOne Support Team on 0800 625 3284.

For further information or enquiries please email 210441@kdc.abcs.co.nz.

Kind regards

Kaipara District Council
Unit 6 - The Hub
6 Molesworth Drive
Mangawhai 0505
www.kaipara.govt.nz

Email #172190: BC210441

Project ID: 210441
Date Sent: 2021-08-26 10:49:47
Recipient: sharon.campbell@complynz.co.nz
Sender: John Dowden
Subject: BC210441: A new email has been allocated to you
Message:

Hello Sharon Campbell,

A new email for BC210441 has been allocated to you. Please check and take appropriate action.

https://kdc.abcs.co.nz/jobs/210441/communication/?optilbox

— AlphaOne System

Email #172308: BC210441

Project ID: 210441
Date Sent: 2021-08-27 14:21:04
Recipient: smartin@kaipara.govt.nz
Sender: Sharon Campbell
Subject: BC210441: Robert Hastie Drive Mangawhai
Message:

Hi Sharon,

How are you going in Lockdown? Able to work still?

I was just wondering about this consent not having a number.
I may be able to complete it today, but I don't know that the consent should go out without a street number?

Your thoughts? Do we have a number for them?

Kind regards,

Sharon Campbell
Contractor
Kaipara District Council
Unit 6 - The Hub, 6 Molesworth Drive, Mangawhai 0505
P: (09) 439 3123 | E: buildingsupport@kaipara.govt.nz | W: www.kaipara.govt.nz

Email #172309: BC210441

Project ID: 210441
Date Sent: 2021-08-27 14:25:13
Recipient: marc@cadetailer.co.nz
Sender: Sharon Campbell
Subject: BC210441: Robert Hastie Drive Mangawhai
Message:

Hi Marc,

Did you get a street number for this site? I've contacted council also, but I'm not sure who is working in other departments.
If I can get this one completed, I'm not sure it can go out without a street number, just checking up on that.

But if you have been provided with a number, can you send that through please? And the council notification?

Thanks Marc.

Kind regards,

Sharon Campbell
Contractor
Kaipara District Council
Unit 6 - The Hub, 6 Molesworth Drive, Mangawhai 0505
P: (09) 439 3123 | E: buildingsupport@kaipara.govt.nz | W: www.kaipara.govt.nz

==========

Hi Sharon,

Please see below for response to your remaining queries

RFI 2: A. The diaphragm does not appear to be connected directly to the bracing elements below (Line C) as is required by NZS3604:2011. Please review this again.
Living area has been shortened to allow for the C brace walls to be within 12m, please find attached revised sheets 201, 502, 503, 504 & 506.

RFI 1: Please specify post to beam fixing detail to ensure there is allowance for uplift as per NZS3604:2011 Sec 9.

NOT RESOLVED - see RFI 2 below.
RFI 2: Proposed post fixing provides 7.5kN fixing, however I believe to comply with NZS3604:2011 Table 9.2, a 11.8kN connection is required to uplift. Please revise or clarify how compliance with B1 has been met (for roof areas outside the living and Master bedroom).
Please find attached revised roof framing plan and detail showing fixing type H to cover the 11.8kN connection.
Please find attached revised sheets 504, 707.

RFI 2: Sheet 701 was missing from the revised plan set. Please send through a copy with your response.

Please find attached

RFI 1: It appears that there will be extensive planting alongside the pool fencing which may provide climbable objects within 1200mm of the fencing. Please provide evidence of compliance with F9.3.3 - that the barrier is free of permanent objects or projections on the outside that could assist children in negotiating the barrier. (Refer F9/AS1 Fig 2). NOT RESOLVED - see RFI 2 below.
RFI 2: Please see attached landscape plan that has been proposed. This does show extensive planting outside and along the pool barrier. Please review and show how compliance with F9 will be achieved.

Please find attached revised landscaping plan with note to say no planting within 1200mm of the pool fence. Architectural plan 201 also noting this.

RFI 1: Please provide manufacturer technical specification for the pool barrier, installation details, PS1 for the glass barrier, pool gates and self closing latches. NOT RESOLVED - see RFI 2 below.
RFI 2: We did receive information for the aluminium pool barrier, but we did not receive any information for the glass pool barrier. Please provide as per the previous request.

Please find attached glass pool documentation.

Thank you

Marc Vale Director | Architectural Designer
[photo-logo]
021 471 119
marc@cadetailer.co.nz
Tauranga, Bay of Plenty

From: Kaipara District Council
Date: Wednesday, 25 August 2021 at 11:08 AM
To: lisa@c3bc.co.nz , Marc Vale
Cc: allocations@complynz.co.nz
Subject: BC210441.2 Request For Further Information - Robert Hastie Drive Mangawhai
Good morning,

Reference Number: BC210441
Project Location: Robert Hastie Drive, Mangawhai
Project Description: New Single Storey 4 Bedroom Dwelling with Attached Double Garage and Swimming Pool

Processing of your building consent application in accordance with s48 of the Building Act is currently in progress. The attached letter details information which is required to be provided to demonstrate that the proposed work will comply with s 48 of the NZ Building Act and Regulations. Please note that the processing time clock has been suspended pending this information.

So that your information gets to us as promptly as possible, please:
- ensure you reply directly to this email and the format of our email address must be in full as follows: 210441@kdc.abcs.co.nz
- provide only the information that specifically relates to this project;
- ensure that all attachments are saved in PDF format;

Following the above will keep your project moving and ensure the information is delivered directly to the processor. To speed up processing we would request that changes to plans are marked using the "cloud" convention - thank you for helping us to help you!

Kind regards,

Sharon Campbell
Contractor 022 697 5120
Kaipara District Council
Unit 6 - The Hub, 6 Molesworth Drive, Mangawhai 0505
P: (09) 439 3123 | E: buildingsupport@kaipara.govt.nz | W: www.kaipara.govt.nz

_____

DISCLAIMER

This message is for the designated recipient(s) only, and may contain confidential and/or privileged information.
If you have received it in error, please delete it and advise the sender immediately.
You should not copy or use it for any other purpose, nor disclose its contents to any other person.

Designated Recipient(s): lisa@c3bc.co.nz, marc@mvarchitecture.co.nz

Sent From: AlphaOne Building Consent System

Sent Date: 25 August 2021 11:08 - Wednesday

REJECTED ATTACHMENT(S):

Note: The listed file(s) below were rejected because they were not in PDF format.

- image001.png
- image00265.png

Email #172310: BC210441

Project ID: 210441
Date Sent: 2021-08-27 14:30:06
Recipient: marc@cadetailer.co.nz
Sender: AlphaOne System
Subject: RE: Re: BC210441: Robert Hastie Drive Mangawhai
Message:

Hello

Thank you for your message regarding your application with Kaipara District Council. This is an automated response to confirm your message has been received by the assigned officer for review. You can expect a response within 5 working days.

We accept email attachments in PDF, JPG and PNG format.

ACCEPTED ATTACHMENTS:
- 20210722_13473563.jpg.pdf (2.70MB)

REJECTED ATTACHMENTS:
- image001.png (13.91kB)
- image00255.png (176.00B)

The rejected attachment(s) may be from your signature. If not, please contact the AlphaOne Support Team on 0800 625 3284.

For further information or enquiries please email 210441@kdc.abcs.co.nz.

Kind regards

Kaipara District Council
Unit 6 - The Hub
6 Molesworth Drive
Mangawhai 0505
www.kaipara.govt.nz

Email #172314: BC210441

Project ID: 210441
Date Sent: 2021-08-27 14:59:59
Recipient: mbayly@kaipara.govt.nz
Sender: Sharon Campbell
Subject: BC210441: Robert Hastie Drive Mangawhai
Message:

Good afternoon Matthew,

The planting plans has changed a little. I believe the same area, but they needed to move it 1200mm away from the pool fence.

Do you need to review this again? See attached revised plans and landscape plan.
Let me know if all good.

The only other change is a minor wall internally making bed 3 slightly larger and the living slightly smaller (only about 600mm).
I'll put a copy of the revised plans into the Working folder for your information.

Kind regards,

Sharon Campbell
Contractor
Kaipara District Council
Unit 6 - The Hub, 6 Molesworth Drive, Mangawhai 0505
P: (09) 439 3123 | E: buildingsupport@kaipara.govt.nz | W: www.kaipara.govt.nz

Hi Sharon,

Yes we applied for that, nice little photo from the client attached - 53 Robert Hastie Drive

Thank you

Marc Vale Director | Architectural Designer
[photo-logo]
021 471 119
marc@cadetailer.co.nz
Tauranga, Bay of Plenty

From: Kaipara District Council
Date: Friday, 27 August 2021 at 2:25 PM
To: Marc Vale
Subject: BC210441: Robert Hastie Drive Mangawhai
Hi Marc,

Did you get a street number for this site? I've contacted council also, but I'm not sure who is working in other departments.
If I can get this one completed, I'm not sure it can go out without a street number, just checking up on that.

But if you have been provided with a number, can you send that through please? And the council notification?

Thanks Marc.

Kind regards,

Sharon Campbell
Contractor
Kaipara District Council
Unit 6 - The Hub, 6 Molesworth Drive, Mangawhai 0505
P: (09) 439 3123 | E: buildingsupport@kaipara.govt.nz | W: www.kaipara.govt.nz

==========
Hi Sharon,

Please see below for response to your remaining queries

RFI 2: A. The diaphragm does not appear to be connected directly to the bracing elements below (Line C) as is required by NZS3604:2011. Please review this again.
Living area has been shortened to allow for the C brace walls to be within 12m, please find attached revised sheets 201, 502, 503, 504 & 506.

RFI 1: Please specify post to beam fixing detail to ensure there is allowance for uplift as per NZS3604:2011 Sec 9.
NOT RESOLVED - see RFI 2 below.
RFI 2: Proposed post fixing provides 7.5kN fixing, however I believe to comply with NZS3604:2011 Table 9.2, a 11.8kN connection is required to uplift. Please revise or clarify how compliance with B1 has been met (for roof areas outside the living and Master bedroom).
Please find attached revised roof framing plan and detail showing fixing type H to cover the 11.8kN connection.
Please find attached revised sheets 504, 707.

RFI 2: Sheet 701 was missing from the revised plan set. Please send through a copy with your response.

Please find attached

RFI 1: It appears that there will be extensive planting alongside the pool fencing which may provide climbable objects within 1200mm of the fencing. Please provide evidence of compliance with F9.3.3 - that the barrier is free of permanent objects or projections on the outside that could assist children in negotiating the barrier. (Refer F9/AS1 Fig 2). NOT RESOLVED - see RFI 2 below.
RFI 2: Please see attached landscape plan that has been proposed. This does show extensive planting outside and along the pool barrier. Please review and show how compliance with F9 will be achieved.

Please find attached revised landscaping plan with note to say no planting within 1200mm of the pool fence. Architectural plan 201 also noting this.

RFI 1: Please provide manufacturer technical specification for the pool barrier, installation details, PS1 for the glass barrier, pool gates and self closing latches. NOT RESOLVED - see RFI 2 below.
RFI 2: We did receive information for the aluminium pool barrier, but we did not receive any information for the glass pool barrier. Please provide as per the previous request.

Please find attached glass pool documentation.

Thank you

Marc Vale Director | Architectural Designer
[photo-logo]
021 471 119
marc@cadetailer.co.nz
Tauranga, Bay of Plenty

From: Kaipara District Council
Date: Wednesday, 25 August 2021 at 11:08 AM
To: lisa@c3bc.co.nz , Marc Vale
Cc: allocations@complynz.co.nz
Subject: BC210441.2 Request For Further Information - Robert Hastie Drive Mangawhai
Good morning,

Reference Number: BC210441
Project Location: Robert Hastie Drive, Mangawhai
Project Description: New Single Storey 4 Bedroom Dwelling with Attached Double Garage and Swimming Pool

Processing of your building consent application in accordance with s48 of the Building Act is currently in progress. The attached letter details information which is required to be provided to demonstrate that the proposed work will comply with s 48 of the NZ Building Act and Regulations. Please note that the processing time clock has been suspended pending this information.

So that your information gets to us as promptly as possible, please:

- ensure you reply directly to this email and the format of our email address must be in full as follows: 210441@kdc.abcs.co.nz
- provide only the information that specifically relates to this project;
- ensure that all attachments are saved in PDF format;

Following the above will keep your project moving and ensure the information is delivered directly to the processor. To speed up processing we would request that changes to plans are marked using the "cloud" convention - thank you for helping us to help you!

Kind regards,

Sharon Campbell
Contractor 022 697 5120
Kaipara District Council
Unit 6 - The Hub, 6 Molesworth Drive, Mangawhai 0505
P: (09) 439 3123 | E: buildingsupport@kaipara.govt.nz | W: www.kaipara.govt.nz

_____

DISCLAIMER

This message is for the designated recipient(s) only, and may contain confidential and/or privileged information.
If you have received it in error, please delete it and advise the sender immediately.
You should not copy or use it for any other purpose, nor disclose its contents to any other person.

Designated Recipient(s): lisa@c3bc.co.nz, marc@mvarchitecture.co.nz

Sent From: AlphaOne Building Consent System

Sent Date: 25 August 2021 11:08 - Wednesday

REJECTED ATTACHMENT(S):
Note: The listed file(s) below were rejected because they were not in PDF format.
- image001.png
- image00265.png

_____

_____

DISCLAIMER
This message is for the designated recipient(s) only, and may contain confidential and/or privileged information. If you have received it in error, please delete it and advise the sender immediately. You should not copy or use it for any other purpose, nor disclose its contents to any other person.

Designated Recipient(s): marc@cadetailer.co.nz
Sent From: AlphaOne Building Consent System
Sent Date: 27 August 2021 14:25:12 pm - Friday

REJECTED ATTACHMENT(S):
Note: The listed file(s) below were rejected because they were not in PDF format.
- image001.png
- image00255.png

Email #172315: BC210441

Project ID: 210441
Date Sent: 2021-08-27 15:09:51
Recipient: lisa@c3bc.co.nz
Sender: Sharon Campbell
Subject:
BC210441.3 Request For Further Information - Robert Hastie Drive Mangawhai
Message:
Good afternoon,

Reference Number: BC210441
Project Location: Robert Hastie Drive, Mangawhai
Project Description: New Single Storey 4 Bedroom Dwelling with Attached Double Garage and Swimming Pool

Processing of your building consent application in accordance with s48 of the Building Act is currently in progress. The attached letter details information which is required to be provided to demonstrate that the proposed work will comply with s 48 of the NZ Building Act and Regulations. Please note that the processing time clock has been suspended pending this information.

So that your information gets to us as promptly as possible, please:
- ensure you reply directly to this email and the format of our email address must be in full as follows: 210441@kdc.abcs.co.nz
- provide only the information that specifically relates to this project;
- ensure that all attachments are saved in PDF format;

Following the above will keep your project moving and ensure the information is delivered directly to the processor. To speed up processing we would request that changes to plans are marked using the "cloud" convention - thank you for helping us to help you!

Kind regards,

Sharon Campbell
Contractor 022 697 5120
Kaipara District Council
Unit 6 - The Hub, 6 Molesworth Drive, Mangawhai 0505
P: (09) 439 3123 | E: buildingsupport@kaipara.govt.nz | W: www.kaipara.govt.nz

Email #172316: BC210441

Project ID: 210441
Date Sent: 2021-08-27 15:14:23
Recipient: smartin@kaipara.govt.nz
Sender: Sharon Campbell
Subject: BC210441: 53 Robert Hastie Drive Mangawhai
Message:

Hey Sharon,

The client has sent through a photo of their street number 53.

I've changed the consent address.

Let me know if I have been given the wrong information or I've done the wrong thing :-)

Thanks Sharon.

Kind regards,

Sharon Campbell
Contractor
Kaipara District Council
Unit 6 - The Hub, 6 Molesworth Drive, Mangawhai 0505
P: (09) 439 3123 | E: buildingsupport@kaipara.govt.nz | W: www.kaipara.govt.nz

Email #172337: BC210441

Project ID: 210441
Date Sent: 2021-08-27 17:40:08
Recipient: marc@cadetailer.co.nz
Sender: AlphaOne System
Subject:
RE: Re: BC210441.3 Request For Further Information - Robert Hastie Drive Mangawhai
Message:
Hello

Thank you for your message regarding your application with Kaipara District Council. This is an automated response to confirm your message has been received by the assigned officer for review. You can expect a response within 5 working days.

We accept email attachments in PDF, JPG and PNG format.

ACCEPTED ATTACHMENTS:
- 53_Robert_Hastie_Dr_Boundaryline_PS1_Glass-Pool-Fence_2020_Rev1.02.pdf (2.00MB)

REJECTED ATTACHMENTS:
- image001.png (13.91kB)
- image0023.png (176.00B)

The rejected attachment(s) may be from your signature. If not, please contact the AlphaOne Support Team on 0800 625 3284.

For further information or enquiries please email 210441@kdc.abcs.co.nz.

Kind regards

Kaipara District Council
Unit 6 - The Hub
6 Molesworth Drive
Mangawhai 0505
www.kaipara.govt.nz

Email #172345: BC210441

Project ID: 210441
Date Sent: 2021-08-28 21:43:16
Recipient: sharon.campbell@complynz.co.nz
Sender: Aaron Brown
Subject: BC210441: A new email has been allocated to you
Message:

Hello Sharon Campbell,

A new email for BC210441 has been allocated to you. Please check and take appropriate action.

https://kdc.abcs.co.nz/jobs/210441/communication/?optilbox

— AlphaOne System

Email #172366: BC210441

Project ID: 210441
Date Sent: 2021-08-30 07:33:50
Recipient: sharon.campbell@complynz.co.nz
Sender: Sharon Martin
Subject: BC210441: 53 Robert Hastie Drive Mangawhai
Message:

Good morning Sharon,

I hope you had a fabulous weekend.

There is a response to your RFI, It has been sent to me but is for you.

Cheers Sharon
Kaipara District Council
Unit 6 - The Hub, 6 Molesworth Drive, Mangawhai 0505
P: (09) 439 3123 | E: buildingsupport@kaipara.govt.nz | W: www.kaipara.govt.nz

Email #172381: BC210441

Project ID: 210441
Date Sent: 2021-08-30 09:41:37
Recipient: ffergus@kaipara.govt.nz
Sender: Sharon Campbell
Subject: BC210441: 53 Robert Hastie Drive Mangawhai
Message:

Good morning Fay,

I'm ready to issue this consent but see there is a block on the BC issue.

the client has provided me with confirmation of their number (photo of the label).
Do you need anything more? If not, can you please remove the block so I can issue the consent.

Many thanks Fay.

Kind regards,

Sharon Campbell
Contractor
Kaipara District Council
Unit 6 - The Hub, 6 Molesworth Drive, Mangawhai 0505
P: (09) 439 3123 | E: buildingsupport@kaipara.govt.nz | W: www.kaipara.govt.nz

Email #172387: BC210441

Project ID: 210441
Date Sent: 2021-08-30 10:23:26
Recipient: lisa@c3bc.co.nz
Sender: Sharon Campbell
Subject:
BC210441.1 Form 5: Building Consent - 53 Robert Hastie Drive Mangawhai
Message:
Dear Sir/Madam,

Please see your attached Issued Building Consent.

I have uploaded the documents for you, you can find them via the Alpha Portal at https://consents-kdc.abcs.co.nz/ - log into your account, go to 'My Applications, click on 'BC', click on 'Documents', click on 'View Documents Issued'.

Please ensure that a copy of all plans, specifications and supporting documents are printed and available on site at all times.

For any further information send your enquiry to 210441@kdc.abcs.co.nz

Kind Regards,

Sharon Campbell
Contractor
Kaipara District Council
Unit 6 - The Hub, 6 Molesworth Drive, Mangawhai 0505
P: (09) 439 3123 | E: buildingsupport@kaipara.govt.nz | W: www.kaipara.govt.nz

Email #172529: BC210441

Project ID: 210441
Date Sent: 2021-08-31 14:20:14
Recipient: mbayly@kaipara.govt.nz
Sender: AlphaOne System
Subject: RE: RE: BC210441: Robert Hastie Drive Mangawhai
Message:

Hello

Thank you for your message regarding your application with Kaipara District Council. This is an automated response to confirm your message has been received by the assigned officer for review. You can expect a response within 5 working days.

We accept email attachments in PDF, JPG and PNG format.

REJECTED ATTACHMENTS:
- image001.jpg (1.61kB)

The rejected attachment(s) may be from your signature. If not, please contact the AlphaOne Support Team on 0800 625 3284.

For further information or enquiries please email 210441@kdc.abcs.co.nz.

Kind regards

Kaipara District Council
Unit 6 - The Hub
6 Molesworth Drive
Mangawhai 0505
www.kaipara.govt.nz

Email #177001: BC210441

Project ID: 210441
Date Sent: 2021-10-19 13:01:14
Recipient: lisa@c3bc.co.nz
Sender: Steve Corkin
Subject: BC210441 Inspection Report
Message:

Our inspection team have carried out a site inspection on the above project today, please find attached the inspectors site notice for your information.

If you have any queries regarding the content of the site notice please contact the inspector on phone 0800 727 059.

Email #177256: BC210441

Project ID: 210441
Date Sent: 2021-10-21 10:53:09
Recipient:
jason@northernfoundationsltd.co.nz, lisa@c3bc.co.nz
Sender: Steve Corkin
Subject: BC210441 Inspection Report
Message:
Our inspection team have carried out a site inspection on the above project today, please find attached the inspectors site notice for your information.

If you have any queries regarding the content of the site notice please contact the inspector on phone 0800 727 059.

Email #179677: BC210441

Project ID: 210441
Date Sent: 2021-11-16 15:04:23
Recipient: scorkin@kaipara.govt.nz
Sender: John Dowden
Subject: BC210441: A new email has been allocated to you
Message:

Hello Steve Corkin,

A new email for BC210441 has been allocated to you. Please check and take appropriate action.

https://kdc.abcs.co.nz/jobs/210441/communication/?optilbox

— AlphaOne System

Email #180474: BC210441

Project ID: 210441
Date Sent: 2021-11-24 10:30:10
Recipient: scorkin@kaipara.govt.nz
Sender: Shalisha Blom
Subject: BC210441: A new email has been allocated to you
Message:

Hello Steve Corkin,

A new email for BC210441 has been allocated to you. Please check and take appropriate action.

https://kdc.abcs.co.nz/jobs/210441/communication/?optilbox

— AlphaOne System

Email #181409: BC210441

Project ID: 210441
Date Sent: 2021-12-03 10:13:54
Recipient:
marc@mvarchitecture.co.nz, lance@coastalhomesnz.com
Sender: Matthew Williams
Subject:
BC210441.3 Inspection Report - 53 Robert Hastie Drive Mangawhai
Message:
Dear Sir,

Our inspection team have carried out a site inspection on the above project today, please find attached the inspectors site notice for your information.

If you have any queries regarding the content of the site notice please contact the inspector on phone 0800 727 059.

Matthew Williams
Building Services Officer
Kaipara District Council
Unit 6 - The Hub, 6 Molesworth Drive, Mangawhai 0505
P: (09) 439 3123 | E: buildingsupport@kaipara.govt.nz | W: www.kaipara.govt.nz

Email #183261: BC210441

Project ID: 210441
Date Sent: 2021-12-23 11:35:51
Recipient: scorkin@kaipara.govt.nz
Sender: Greg Bellam
Subject: BC210441: A new Document for you
Message:

Hello Steve Corkin,

Documents on BC210441 have been allocated to you. Please check and take appropriate action.

https://kdc.abcs.co.nz/jobs/210441

— AlphaOne System

Email #185567: BC210441

Project ID: 210441
Date Sent: 2022-02-02 13:04:36
Recipient: lisa@c3bc.co.nz
Sender: Greg Bellam
Subject: BC210441 Inspection Report
Message:

Our inspection team have carried out a site inspection on the above project today, please find attached the inspectors site notice for your information.

If you have any queries regarding the content of the site notice please contact the inspector on phone 0800 727 059.

Email #185815: BC210441

Project ID: 210441
Date Sent: 2022-02-04 12:01:18
Recipient: lance@coastalhomesnz.com, lisa@c3bc.co.nz
Sender: Greg Bellam
Subject: BC210441 Inspection Report
Message:

Our inspection team have carried out a site inspection on the above project today, please find attached the inspectors site notice for your information.

If you have any queries regarding the content of the site notice please contact the inspector on phone 0800 727 059.

Email #186226: BC210441

Project ID: 210441
Date Sent: 2022-02-09 15:55:16
Recipient: lisa@c3bc.co.nz
Sender: Steve Corkin
Subject: BC210441 Inspection Report
Message:

Our inspection team have carried out a site inspection on the above project today, please find attached the inspectors site notice for your information.

If you have any queries regarding the content of the site notice please contact the inspector on phone 0800 727 059.

Email #187593: BC210441

Project ID: 210441
Date Sent: 2022-02-22 11:30:21
Recipient:
lance@coastalhomesnz.com, linda.kendall@xtra.co.nz, lisa@c3bc.co.nz
Sender: Greg Bellam
Subject: BC210441 Inspection Report
Message:
Our inspection team have carried out a site inspection on the above project today, please find attached the inspectors site notice for your information.

If you have any queries regarding the content of the site notice please contact the inspector on phone 0800 727 059.

Email #189828: BC210441

Project ID: 210441
Date Sent: 2022-03-14 15:18:16
Recipient:
lance@coastalhomesnz.com, linda.kendall@xtra.co.nz
Sender: Greg Bellam
Subject: BC210441 Inspection Report
Message:
Our inspection team have carried out a site inspection on the above project today, please find attached the inspectors site notice for your information.

If you have any queries regarding the content of the site notice please contact the inspector on phone 0800 727 059.

Email #191488: BC210441

Project ID: 210441
Date Sent: 2022-03-30 15:06:11
Recipient:
lance@coastalhomesnz.com, linda.kendall@xtra.co.nz, lisa@c3bc.co.nz
Sender: Greg Bellam
Subject: BC210441 Inspection Report
Message:
Our inspection team have carried out a site inspection on the above project today, please find attached the inspectors site notice for your information.

If you have any queries regarding the content of the site notice please contact the inspector on phone 0800 727 059.

Email #192745: BC210441

Project ID: 210441
Date Sent: 2022-04-14 07:25:22
Recipient:
lance@coastalhomesnz.com, linda.kendall@xtra.co.nz
Sender: Greg Bellam
Subject: BC210441 Inspection Report
Message:
Our inspection team have carried out a site inspection on the above project today, please find attached the inspectors site notice for your information.

If you have any queries regarding the content of the site notice please contact the inspector on phone 0800 727 059.

Email #195734: BC210441

Project ID: 210441
Date Sent: 2022-05-18 15:05:40
Recipient: gbellam@kaipara.govt.nz
Sender: Shalisha Blom
Subject: BC210441: A new email has been allocated to you
Message:

Hello Greg Bellam,

A new email for BC210441 has been allocated to you. Please check and take appropriate action.

https://kdc.abcs.co.nz/jobs/210441/communication/?optilbox

— AlphaOne System

Email #195875: BC210441

Project ID: 210441
Date Sent: 2022-05-19 13:12:53
Recipient: lance@coastalhomesnz.com
Sender: System
Subject: Online Code Compliance Certificate Application
Message:

Hello Lance Vale,

Please find attached a copy of the information you have submitted to Kaipara District Council. We will process your application electronically and email you if we require additional information.

Should you have any queries regarding your application please reply to this email or call our Building Services Team on 09 439 3123.

— Kaipara District Council

Email #195929: BC210441

Project ID: 210441
Date Sent: 2022-05-19 15:54:14
Recipient: gbellam@kaipara.govt.nz
Sender: Shalisha Blom
Subject: BC210441: A new email has been allocated to you
Message:

Hello Greg Bellam,

A new email for BC210441 has been allocated to you. Please check and take appropriate action.

https://kdc.abcs.co.nz/jobs/210441/communication/?optilbox

— AlphaOne System

Email #196666: BC210441

Project ID: 210441
Date Sent: 2022-05-25 16:05:08
Recipient: lance@coastalhomesnz.com, lisa@c3bc.co.nz
Sender: John Edwards
Subject: BC210441 Inspection Report
Message:

Our inspection team have carried out a site inspection on the above project today, please find attached the inspectors site notice for your information.

If you have any queries regarding the content of the site notice please contact the inspector on phone 0800 727 059.

Email #197918: BC210441

Project ID: 210441
Date Sent: 2022-06-07 16:13:43
Recipient: gbellam@kaipara.govt.nz
Sender: Shalisha Blom
Subject: BC210441: A new email has been allocated to you
Message:

Hello Greg Bellam,

A new email for BC210441 has been allocated to you. Please check and take appropriate action.

https://kdc.abcs.co.nz/jobs/210441/communication/?optilbox

— AlphaOne System

Email #198178: BC210441

Project ID: 210441
Date Sent: 2022-06-09 13:12:34
Recipient: lance@coastalhomesnz.com
Sender: AlphaOne System
Subject:
BC210441: Document Rejected | Address: 53 Robert Hastie Drive Mangawhai
Message:

Dear Lance Vale,

The following document for BC210441 has been rejected for the following reasons: Plumber needs to tick the pressure test 1500 kpa and upvc pipe work test if stacks

Document Name: Kendall_P_S_3.pdf

Regards,

Kaipara District Council

(09) 439 3123 | buildingsupport@kaipara.govt.nz | www.kaipara.govt.nz

Email #198702: BC210441

Project ID: 210441
Date Sent: 2022-06-14 16:15:31
Recipient: gbellam@kaipara.govt.nz
Sender: Shalisha Blom
Subject: BC210441: A new email has been allocated to you
Message:

Hello Greg Bellam,

A new email for BC210441 has been allocated to you. Please check and take appropriate action.

https://kdc.abcs.co.nz/jobs/210441/communication/?optilbox

— AlphaOne System

Email #199023: BC210441

Project ID: 210441
Date Sent: 2022-06-17 08:01:03
Recipient: lance@coastalhomesnz.com
Sender: AlphaOne System
Subject:
BC210441: Document Rejected | Address: 53 Robert Hastie Drive Mangawhai
Message:

Dear Lance Vale,

The following document for BC210441 has been rejected for the following reasons: Please add the building consent number to the form

Document Name: ps3_plumb.pdf

Regards,

Kaipara District Council

(09) 439 3123 | buildingsupport@kaipara.govt.nz | www.kaipara.govt.nz

Email #200010: BC210441

Project ID: 210441
Date Sent: 2022-06-28 17:17:16
Recipient:
lance@coastalhomesnz.com, jason@northernfoundationsltd.co.nz, lisa@c3bc.co.nz
Sender: John Edwards
Subject: BC210441 Inspection Report
Message:
Our inspection team have carried out a site inspection on the above project today, please find attached the inspectors site notice for your information.

If you have any queries regarding the content of the site notice please contact the inspector on phone 0800 727 059.

Email #200059: BC210441

Project ID: 210441
Date Sent: 2022-06-29 12:55:14
Recipient: jedwards@kaipara.govt.nz
Sender: Greg Bellam
Subject: BC210441: A new email has been allocated to you
Message:

Hello John Edwards,

A new email for BC210441 has been allocated to you. Please check and take appropriate action.

https://kdc.abcs.co.nz/jobs/210441/communication/?optilbox

— AlphaOne System

Email #200309: BC210441

Project ID: 210441
Date Sent: 2022-07-01 13:19:02
Recipient: lance@coastalhomesnz.com
Sender: AlphaOne System
Subject:
BC210441: Document Rejected | Address: 53 Robert Hastie Drive Mangawhai
Message:

Dear Lance Vale,

The following document for BC210441 has been rejected for the following reasons: Hi Lance you may want to discuss this with Aaron and see if he is ok with this , I talked to him before I sent the final letter to you.

Document Name: BC210441.7-20220222113017_Inspection-Report-pool_hole.pdf

Regards,

Kaipara District Council

(09) 439 3123 | buildingsupport@kaipara.govt.nz | www.kaipara.govt.nz

Email #202372: BC210441

Project ID: 210441
Date Sent: 2022-07-22 15:43:18
Recipient: jedwards@kaipara.govt.nz
Sender: Greg Bellam
Subject: BC210441: A new email has been allocated to you
Message:

Hello John Edwards,

A new email for BC210441 has been allocated to you. Please check and take appropriate action.

https://kdc.abcs.co.nz/jobs/210441/communication/?optilbox

— AlphaOne System

Email #202391: BC210441

Project ID: 210441
Date Sent: 2022-07-22 16:08:43
Recipient: jedwards@kaipara.govt.nz
Sender: Aaron Brown
Subject: BC210441: A new Document for you
Message:

Hello John Edwards,

Documents on BC210441 have been allocated to you. Please check and take appropriate action.

https://kdc.abcs.co.nz/jobs/210441

— AlphaOne System

Email #203375: BC210441

Project ID: 210441
Date Sent: 2022-08-03 12:35:05
Recipient: lance@coastalhomesnz.com
Sender: AlphaOne System
Subject: RE: Re: BC210441 Inspection Report
Message:

Hello

Thank you for your message regarding your application with Kaipara District Council. This is an automated response to confirm your message has been received by the assigned officer for review. You can expect a response within 5 working days.

For further information or enquiries please email 210441@kdc.abcs.co.nz.

Kind regards

Kaipara District Council
Unit 6 - The Hub
6 Molesworth Drive
Mangawhai 0505
www.kaipara.govt.nz

Email #203459: BC210441

Project ID: 210441
Date Sent: 2022-08-04 08:29:35
Recipient: jedwards@kaipara.govt.nz
Sender: Greg Bellam
Subject: BC210441: A new email has been allocated to you
Message:

Hello John Edwards,

A new email for BC210441 has been allocated to you. Please check and take appropriate action.

https://kdc.abcs.co.nz/jobs/210441/communication/?optilbox

— AlphaOne System

Email #203571: BC210441

Project ID: 210441
Date Sent: 2022-08-05 08:37:58
Recipient: aaron.brown@kaipara.govt.nz
Sender: John Edwards
Subject: BC210441: 53 Robert Hastie Drive Mangawhai
Message:

John Edwards
building control officer
Kaipara District Council
Unit 6 - The Hub, 6 Molesworth Drive, Mangawhai 0505
P: (09) 439 3123 | E: buildingsupport@kaipara.govt.nz | W: www.kaipara.govt.nz

Hi John 53 Robert Hastie Drive
We should be able to Sign this off now.

The pool was covered by your inspection onsite and ok to install pool as
per site notes from Gregs inspection.
The excavations are all done on engineered fill as the whole site was cut
and fill and passed off by Matt Wileys inspections and producer statements.

The slab PS4 this was a standard rib raft floor and was inspected by
council only Northern Foundations have supplied ROW
Could we please get this wrapped up for the clients now

cheers

Lance Vale
Coastal Homes Northland
021-2224833
Email: lance@coastalhomesnz.com

On Tue, Jun 28, 2022 at 5:19 PM Kaipara District Council wrote:

> Our inspection team have carried out a site inspection on the above
> project today, please find attached the inspectors site notice for your
> information.

>
> If you have any queries regarding the content of the site notice please
> contact the inspector on phone 0800 727 059.
>
>
> ----------
>
> *DISCLAIMER*
>
>
> This message is for the designated recipient(s) only, and may contain
> confidential and/or privileged information.
> If you have received it in error, please delete it and advise the sender
> immediately.
> You should not copy or use it for any other purpose, nor disclose its
> contents to any other person.
>
>
> Designated Recipient(s): lance@coastalhomesnz.com,
> jason@northernfoundationsltd.co.nz, lisa@c3bc.co.nz
>
> Sent From: AlphaOne Building Consent System
>
> Sent Date: 28 June 2022 17:17 - Tuesday
>
>

Email #203662: BC210441

Project ID: 210441
Date Sent: 2022-08-05 15:16:59
Recipient: linda.kendall@xtra.co.nz
Sender: John Edwards
Subject:

BC210441 Form 7: Code Compliance Certificate - 53 Robert Hastie Drive Mangawhai

Message:

Dear Sir/Madam,

Reference Number: BC210441

Form 7: Code Compliance Certificate

John Edwards
building control officer
Kaipara District Council
Unit 6 - The Hub, 6 Molesworth Drive, Mangawhai 0505
P: (09) 439 3123 | E: buildingsupport@kaipara.govt.nz | W: www.kaipara.govt.nz

Email #203691: BC210441

Project ID: 210441
Date Sent: 2022-08-06 10:40:04
Recipient: linda.kendall@xtra.co.nz
Sender: AlphaOne System
Subject:
RE: RE: BC210441 Form 7: Code Compliance Certificate - 53 Robert Hastie Drive Mangawhai
Message:
Hello

Thank you for your message regarding your application with Kaipara District Council. This is an automated response to confirm your message has been received by the assigned officer for review. You can expect a response within 5 working days.

For further information or enquiries please email 210441@kdc.abcs.co.nz.

Kind regards

Kaipara District Council
Unit 6 - The Hub
6 Molesworth Drive
Mangawhai 0505
www.kaipara.govt.nz