Kaipara District Council
Unit 6 - The Hub, 6 Molesworth Drive, Mangawhai 0505
buildingsupport@kaipara.govt.nz
(09) 439 3123

BC210208

Alpha ID: 210208
Application Type: Building Consent with PIM
Site Address: 8 Sampsons Way Dargaville
Project Description: Construct 3 Bedroom Dwelling with Attached Garage
Project Status: Code Compliance Certificate Issued

Creation Date: 30 March 2022

Table of Contents

Lodged Documents

Form 2: Application for Building Consent including PIM 1
PLG 1 Application 6
Restricted building work memorandums Owner-builder declaration - 17644_BC_Documents_2021-03-29.pdf 8
Record of title - 912640_Title_Search_Copy_cheaptitles.co.nz.pdf 11
Approvals from other authorities - Edge_Authorisation.pdf 14
Supporting documents - Consent_Notice.pdf 15
Restricted building work memorandums Owner-builder declaration - EDGE_RANDELL_LBP_MEMO.pdf 21
Specifications - SPECIFICATION_-EDGE_RANDELL.pdf 23
Plans - Plans.pdf 151
Supporting documents - H1_ENERGY_EFFICIENCY_-_EDGE_RANDELL.pdf 178
Supporting documents - Edge_KDC_Vehicle_Crossing_Application.pdf 184
Supporting documents - Report_-_Site_Suitability.pdf 187
Supporting documents - Edge_Randell_-_Truss_Design.pdf 202
Supporting documents - Edge_Water_Meter_Application.pdf 208

Vetting

Request For Further Information - Vetting 1 211
VRFI Discussion History 213

Development Contributions, RMA, PIM

Form 4: Certificate attached to PIM 214
PIM 215

Processing

Request For Further Information 1 234
Request For Further Information 2 237
Request For Further Information 3 240
Request For Further Information 4 242
Request For Further Information 5 244
Request For Further Information 6 246
Request For Further Information 7 248
Request For Further Information 8 250
RFI Discussion History 252

Building Consent

Form 5: Building Consent 258
Stamped_Documents_-_BC210208_-_Approved_Supporting_Docs.pdf 284
Stamped_Documents_-_BC210208_-_Approved_Specifications.pdf 481
Stamped_Documents_-_BC210208_-_Approved_Plans.pdf 595

Stamped_Documents_-_BC210208_-_Approved_Application.pdf 624

Inspections

Inspection Report 1 - Wastepipes 640
Inspection Report 2 - Wastepipes 642
Inspection Report 3 - Siting and Site Scrape Inspection - Prepour 644
Inspection Report 4 - Floor Slab - Framing Pre-wrap 647
Inspection Report 5 - Post Wrap Cavity 649
Inspection Report 6 651
Inspection Report 7 - Siting and Site Scrape Inspection - Prepour - Wastepipes - Floo... 653
Inspection Report 8 - Post Wrap Cavity - Half High Brick 656
Inspection Report 9 659
Inspection Report 10 - Preline - Post Line - Drainage 662
Inspection Report 11 666
Inspection Report 12 - Deck Roof membrane - Final 674
Inspections Media Album 676

CCC Documents

B1 Foundations - Construction Monitoring Records PS4 - CPEng To Inspect Foundations Prior To Concrete Pour. - 17644-Inspection-Sheet-2021-08-06.pdf 686
B1 Foundations - Construction Monitoring Records PS4 - CPEng To Inspect Foundations Prior To Concrete Pour. - 17644-Inspection-Sheet-2021-07-29_1.pdf 689
Miscellaneous documents - 20211208150505198.pdf 691
Miscellaneous documents - imagejpeg_225.jpg.pdf 692
E1 Stormwater Drain As-built Plans - Edge_Asbuilt_1.pdf 693
G13 As-builts Drainlayer Details. - 20211216144224213.pdf 695
B1 Foundations - Construction Monitoring Records PS4 - CPEng To Inspect Foundations Prior To Concrete Pour. - 17644_Construction_Monitoring_Report_2021-12-07.pdf 696
Miscellaneous documents - imagejpeg_230.jpg.pdf 708
B1 Truss certification - RoW_Builder_Edge.pdf 709
Miscellaneous documents - RoW_and_PS_GJR_3557_8_Sampsons_Way.pdf 711
Miscellaneous documents - Bricklayers_RoW.pdf 713
G9 Energy works certificate - Edge_Electrical_Cert_1.pdf 714
B1 Truss certification - Edge_-_Tiler_memo_PS3.pdf 715
B1 Truss certification - Edge_-_Waterproofing_Cert..pdf 716
Miscellaneous documents - Edge_-_Plumber_Asbuilt.jpg.pdf 718
Miscellaneous documents - Edge_-_Slab_RoW_Aaron_Bates.pdf 719
Miscellaneous documents - Edge_Amended_Builders_RoW.pdf 722
Minor variations - 20220322_132645.jpg.pdf 724
Scanned_CCC_Documents_-_CCC210208.pdf 725
Scanned_CCC_Documents_-_Miscellaneousdocuments-001.pdf 727

Scanned_CCC_Documents_-_Miscellaneousdocuments-006.pdf 728

729

Scanned_CCC_Documents_-_B1Trusscertification-002.pdf 741

742

Scanned_CCC_Documents_-_G13As-builtsDrainlayerDetails.-001.pdf 744
Scanned_CCC_Documents_-_BC210208.1-210531101123_form-5-building-consent_20210712-084549-127.pdf 745
Scanned_CCC_Documents_-_B1Trusscertification-001.pdf 771
Scanned_CCC_Documents_-_Miscellaneousdocuments-005.pdf 773
Scanned_CCC_Documents_-_B1Trusscertification-003.pdf 774
Scanned_CCC_Documents_-_E1StormwaterDrainAs-builtPlans-001.pdf 776
Scanned_CCC_Documents_-_Miscellaneousdocuments-002.pdf 778

779

Scanned_CCC_Documents_-_Miscellaneousdocuments-004.pdf 782
Scanned_CCC_Documents_-_G9Energyworkscertificate-001.pdf 784
Scanned_CCC_Documents_-_Miscellaneousdocuments-003.pdf 785

Code Compliance Certificate

Form 7: Code Compliance Certificate 786

Emails

Email_210208_I_am_currently_on_Annual_Leave_Re_BC210208.1_Reque_20210427.pdf 788
Email_210208_ATTN_SHARON_CAMPBELL_FW_8_Sampsons_Way_-_Ref_no._2_20210503.pdf 790
Email_210208_Re_BC210208.3_Request_For_Further_Information_-_8__20210505.pdf 792
Email_210208_ATTN_MATT_BAYLEY_FW_8_Sampsons_Way_-_Ref_no_210208_20210506.pdf 795
Email_210208_Re_BC210208_8_Sampsons_Way_Dargaville_20210506.pdf 797
Email_210208_Automatic_reply_BC210208.4_Request_For_Further_Inf_20210507.pdf 800
Email_210208_Automatic_reply_BC210208.5_Request_For_Further_Inf_20210513.pdf 801
Email_210208_Ref_number_210208.5_20210513.pdf 802
Email_210208_BC210208_New_Documents_Uploaded_20210528.pdf 804
Email_210208_Fwd_Site_Plan_-_BC210208_20210531.pdf 805
Email_210208_Fwd_Site_Plan_-_BC210208_20210531_002.pdf 808
Email_210208_Fwd_FW_8_Sampsons_Way_20210614.pdf 812
Email_210208_Re_BC210208_8_Sampsons_Way_Dargaville_20210615.pdf 833
Email_210208_Re_BC210208_8_Sampsons_Way_Dargaville_20210615_002.pdf 857
Email_210208_ATT_CATHY_THOMAS_-_SHARON_CAMPBELL_FW_390076_Edge__20210615.pdf 885
Email_210208_FW_390076_Edge_-_BC210208_Lot_8_Sampsons_Way_Darga_20210617.pdf 889
Email_210208_ATTN_CATHERINE_THOMAS_FW_390076_Edge_-_BC210208_Lo_20210617.pdf 893
Email_210208_Undelivered_Mail_Returned_to_Sender_20210620.pdf 898

Email_210208_Undelivered_Mail_Returned_to_Sender_20210620_002.pdf 908
Email_210208_Re_BC210208_8_Sampsons_Way_Dargaville_20210623.pdf 918
Email_210208_ATTN_CATHY_THOMAS_SHARON_CAMPBELL_FW_RS17644_-_Fou_20210624.pdf 921
Email_210208_RE_BC210208_8_Sampsons_Way_Dargaville_20210628.pdf 924
Email_210208_RE_BC210208_8_Sampsons_Way_Dargaville_20210629.pdf 926
Email_210208_Fwd_FW_BC210208_8_Sampsons_Way_Dargaville_20210630.pdf 930
Email_210208_Fwd_Edge_Plumbing_and_Drainage_20210630.pdf 935
Email_210208_Re_BC210208_8_Sampsons_Way_Dargaville_20210701.pdf 938
Email_210208_FW_BC210208.1_Form_5_Building_Consent_-_8_Sampsons_20210707.pdf 940
Email_210208_BC210208_New_Documents_Uploaded_20210809.pdf 943
Email_210208_Re_BC210208_8_Sampsons_Way_Dargaville_-_Invoice_fo_20210810.pdf 944
Email_210208_Fwd_BC210208_8_Sampsons_Way_Dargaville_-_Invoice_f_20210908.pdf 947
Email_210208_BC210208_New_Documents_Uploaded_20220317.pdf 951
Email_210208_BC210208_New_Documents_Uploaded_20220318.pdf 952
Email_210208_BC210208_New_Documents_Uploaded_20220322.pdf 953
Email_210208_BC210208_New_Documents_Uploaded_20220323.pdf 954

Sent Emails

Email_210208_BC210208_8_Sampsons_Way_Dargaville_20210406.pdf 955
Email_210208_BC210208.1_Request_For_Further_Information_-_Vetti_20210406.pdf 956
Email_210208_Application_Accepted_20210412.pdf 958
Email_210208_BC210208_A_new_job_for_you_20210420.pdf 959
Email_210208_BC210208_A_new_job_for_you_20210423.pdf 960
Email_210208_BC210208.1_Form_4_Certificate_attached_to_PIM_-_8__20210423.pdf 961
Email_210208_Specialist_Input_Requested_-_25_Apr_2021_20210425.pdf 962
Email_210208_BC210208.1_Request_For_Further_Information_-_8_Sam_20210427.pdf 963
Email_210208_BC210208.1_Request_For_Further_Information_-_8_Sam_20210427_002.pdf 964
Email_210208_BC210208_A_new_email_has_been_allocated_to_you_20210427.pdf 965
Email_210208_BC210208_A_new_job_for_you_20210429.pdf 966
Email_210208_BC210208_8_Sampsons_Way_Dargaville_20210429.pdf 967
Email_210208_BC210208_8_Sampsons_Way_Dargaville_20210429_002.pdf 968
Email_210208_BC210208.2_Request_For_Further_Information_-_8_Sam_20210430.pdf 969
Email_210208_BC210208_8_Sampsons_Way_Dargaville_20210430.pdf 971
Email_210208_BC210208.3_Request_For_Further_Information_-_8_Sam_20210430.pdf 972
Email_210208_BC210208_A_new_email_has_been_allocated_to_you_20210504.pdf 973
Email_210208_RE_Re_BC210208.3_Request_For_Further_Information_-_20210505.pdf 974
Email_210208_BC210208.1_PIM_-_8_Sampsons_Way_Dargaville_20210505.pdf 975
Email_210208_BC210208_8_Sampsons_Way_Dargaville_20210505.pdf 977
Email_210208_BC210208_8_Sampsons_Way_Dargaville_20210505_002.pdf 980
Email_210208_BC210208_A_new_email_has_been_allocated_to_you_20210506.pdf 982

Email_210208_RE_Re_BC210208_8_Sampsons_Way_Dargaville_20210506.pdf 983
Email_210208_BC210208_A_new_email_has_been_allocated_to_you_20210507.pdf 984
Email_210208_BC210208.4_Request_For_Further_Information_-_8_Sam_20210507.pdf 985
Email_210208_BC210208_A_new_email_has_been_allocated_to_you_20210507_002.pdf 986
Email_210208_BC210208_8_Sampsons_Way_Dargaville_20210508.pdf 987
Email_210208_BC210208_8_Sampsons_Way_Dargaville_-_Invoice_for_o_20210512.pdf 989
Email_210208_BC210208.5_Request_For_Further_Information_-_8_Sam_20210513.pdf 990
Email_210208_BC210208_8_Sampsons_Way_Dargaville_20210513.pdf 992
Email_210208_RE_Ref_number_210208.5_20210513.pdf 994
Email_210208_BC210208_A_new_email_has_been_allocated_to_you_20210513.pdf 995
Email_210208_BC210208_A_new_email_has_been_allocated_to_you_20210513_002.pdf 996
Email_210208_BC210208_8_Sampsons_Way_Dargaville_20210514.pdf 997
Email_210208_BC210208_Document_Rejected__Address_8_Sampsons_Way_20210530.pdf 999
Email_210208_BC210208_8_Sampsons_Way_Dargaville_20210530.pdf 1000
Email_210208_RE_Fwd_Site_Plan_-_BC210208_20210531.pdf 1002
Email_210208_RE_Fwd_Site_Plan_-_BC210208_20210531_002.pdf 1003
Email_210208_BC210208_8_Sampsons_Way_Dargaville_20210531.pdf 1004
Email_210208_RE_Fwd_FW_8_Sampsons_Way_20210614.pdf 1008
Email_210208_BC210208_A_new_email_has_been_allocated_to_you_20210614.pdf 1009
Email_210208_BC210208_A_new_email_has_been_allocated_to_you_20210614_002.pdf 1010
Email_210208_BC210208_8_Sampsons_Way_Dargaville_20210615.pdf 1011
Email_210208_RE_Re_BC210208_8_Sampsons_Way_Dargaville_20210615.pdf 1032
Email_210208_BC210208_8_Sampsons_Way_Dargaville_20210615_002.pdf 1033
Email_210208_RE_Re_BC210208_8_Sampsons_Way_Dargaville_20210615_002.pdf 1058
Email_210208_BC210208_8_Sampsons_Way_Dargaville_20210615_003.pdf 1059
Email_210208_BC210208_A_new_email_has_been_allocated_to_you_20210615.pdf 1087
Email_210208_BC210208_A_new_email_has_been_allocated_to_you_20210615_002.pdf 1088
Email_210208_BC210208_8_Sampsons_Way_Dargaville_20210617.pdf 1089
Email_210208_BC210208.6_Request_For_Further_Information_-_8_Sam_20210617.pdf 1090
Email_210208_BC210208_A_new_email_has_been_allocated_to_you_20210617.pdf 1091
Email_210208_BC210208_8_Sampsons_Way_Dargaville_20210620.pdf 1092
Email_210208_BC210208_8_Sampsons_Way_Dargaville_20210620_002.pdf 1097
Email_210208_BC210208_8_Sampsons_Way_Dargaville_20210621.pdf 1102
Email_210208_BC210208_8_Sampsons_Way_Dargaville_20210622.pdf 1103
Email_210208_RE_Re_BC210208_8_Sampsons_Way_Dargaville_20210623.pdf 1104
Email_210208_BC210208_A_new_email_has_been_allocated_to_you_20210623.pdf 1105
Email_210208_BC210208_8_Sampsons_Way_Dargaville_20210627.pdf 1106
Email_210208_BC210208_8_Sampsons_Way_Dargaville_20210628.pdf 1107
Email_210208_RE_RE_BC210208_8_Sampsons_Way_Dargaville_20210628.pdf 1108
Email_210208_BC210208_A_new_email_has_been_allocated_to_you_20210629.pdf 1109

Email_210208_BC210208_8_Sampsons_Way_Dargaville_20210629.pdf 1110
Email_210208_RE_RE_BC210208_8_Sampsons_Way_Dargaville_20210629.pdf 1113
Email_210208_BC210208_8_Sampsons_Way_Dargaville_20210629_002.pdf 1114
Email_210208_BC210208_8_Sampsons_Way_Dargaville_20210630.pdf 1118
Email_210208_RE_Fwd_FW_BC210208_8_Sampsons_Way_Dargaville_20210630.pdf 1119
Email_210208_RE_Fwd_Edge_Plumbing_and_Drainage_20210630.pdf 1120
Email_210208_BC210208_8_Sampsons_Way_Dargaville_20210630_002.pdf 1121
Email_210208_BC210208_8_Sampsons_Way_Dargaville_20210701.pdf 1122
Email_210208_RE_Re_BC210208_8_Sampsons_Way_Dargaville_20210701.pdf 1123
Email_210208_BC210208.1_Form_5_Building_Consent_-_8_Sampsons_Wa_20210702.pdf 1124
Email_210208_BC210208_A_new_email_has_been_allocated_to_you_20210707.pdf 1125
Email_210208_BC210208_8_Sampsons_Way_Dargaville_-_Invoice_for_o_20210715.pdf 1126
Email_210208_BC210208_Inspection_Report_20210804.pdf 1127
Email_210208_BC210208_Inspection_Report_20210809.pdf 1128
Email_210208_RE_Re_BC210208_8_Sampsons_Way_Dargaville_-_Invoice_20210810.pdf 1129
Email_210208_BC210208_A_new_email_has_been_allocated_to_you_20210810.pdf 1130
Email_210208_BC210208_A_new_Document_for_you_20210810.pdf 1131
Email_210208_BC210208_A_new_email_has_been_allocated_to_you_20210810_002.pdf 1132
Email_210208_RE_Fwd_BC210208_8_Sampsons_Way_Dargaville_-_Invoic_20210908.pdf 1133
Email_210208_BC210208_A_new_email_has_been_allocated_to_you_20210908.pdf 1134
Email_210208_BC210208_8_Sampsons_Way_Dargaville_20210908.pdf 1135
Email_210208_BC210208_Inspection_Report_20211007.pdf 1139
Email_210208_BC210208_Inspection_Report_20211101.pdf 1140
Email_210208_BC210208_Inspection_Report_20211110.pdf 1141
Email_210208_BC210208.7_Inspection_Report_-_8_Sampsons_Way_Darg_20211202.pdf 1142
Email_210208_BC210208_Inspection_Report_20211214.pdf 1143
Email_210208_BC210208_Inspection_Report_20211220.pdf 1144
Email_210208_BC210208_Inspection_Report_20220201.pdf 1145
Email_210208_BC210208_Inspection_Report_20220322.pdf 1146
Email_210208_BC210208_A_new_email_has_been_allocated_to_you_20220322.pdf 1147
Email_210208_BC210208_A_new_email_has_been_allocated_to_you_20220323.pdf 1148
Email_210208_BC210208_Inspection_Report_20220323.pdf 1149
Email_210208_BC210208_Form_7_Code_Compliance_Certificate_-_8_Sa_20220323.pdf 1150

Date Submitted: Wednesday, 31 March 2021

Form 2
Application for project information memorandum and/or building consent

Section 33 or section 45, Building Act 2004

The building

Street address of building:	Lot 8 Sampsons Way Dargaville
Legal description of land where building is located:	542244
Building name:	Main Building
Location of building within site/block number:	Lot 8 Sampsons Way Dargaville
Number of levels:	No information provided
Level/unit number:	No information provided
Area:	Total: 145.00 m2, Change: 145.00 m2
Current, lawfully established, use:	Level 1: 2.0 Housing: 2.0.2 Detached Dwelling has 2 occupants
Year first constructed:	2021

The owner

Name of owner:	Rachyl Edge And Regan Randell
Mailing address:	104 Te Kowhai Drive Northland 0179
Street address/registered office:	No information provided
Phone number:	Landline: 094375666 Mobile: N/A
Daytime:	Landline: 094375666 Mobile: N/A
After hours:	Landline: 094375666 Mobile: N/A
Facsimile number:	No information provided
Email address:	rachyledge@gmail.com
Website:	No information provided

The following evidence of ownership is attached to this application:

1. 912640_Title_Search_Copy_cheaptitles.co.nz.pdf (310.64K)

Agent

Name of agent:	Genna Jones			
Mailing address:	Po Box 8046 Kensington 0145			
Street address/registered office:	Po Box 8046 Kensington			
Phone number:	Landline:	094375666	Mobile:	094375666
Daytime:	Landline:	094375666	Mobile:	094375666
After hours:	Landline:	094375666	Mobile:	094375666
Facsimile number:	No information provided			
Email address:	genna.jones@gjgardner.co.nz			
Website:	No information provided			
Relationship to owner:	Application made on owners behalf			

First point of contact for communications with the council/building consent authority:

Full name:	Genna Jones
Mailing address:	Po Box 8046 Kensington Whanagrei 0145
Phone number(s):	094375666
Facsimile number(s):	N/A
Email address(es):	genna.jones@gjgardner.co.nz

Application

I request that you issue a building consent for the building work described in this application.

Signature of agent on behalf of and with the authority of the owner:

JUILEANNE MOLLET

Date: 31 Mar 2021

space for council use

Application Type	Building Consent only
Reference Key:	78714207BP
Name:	Genna Jones
Application Role:	Agent

The project

Description of the building work:
Construct 3 Bedroom Dwelling with Attached Garage

Will the building work result in a change of use of the building?	No
Intended life of the building if less than 50 years:	50 years
List building consents previously issued for this project (if any):	No information provided
Estimated value of the building work on which the building levy will be calculated (including goods and services tax):	$349,000

Restricted building work

Will the building work include any restricted building work? Yes

If Yes, provide the following details of all licensed building practitioners who will be involved in carrying out or supervising the restricted building work:

Name	Steven Turner
Licensing class	Design
Licensed building practitioner number (or registration number if treated as being licensed under section 291 of Act)	87465

Name	Conrad Lienert
Licensing class	Design
Licensed building practitioner number (or registration number if treated as being licensed under section 291 of Act)	BP113635

Building consent

The following plans and specifications are attached to this application:
1. Plans.pdf (9.08M)
2. SPECIFICATION_-EDGE_RANDELL.pdf (18.26M)

The building work will comply with the building code as follows:

Main Building

B1 - Structure	AS1
B2 - Durability	AS1
C1 - C6 - Protection from Fire (current)	AS1
D1 - Access Routes	AS1

E1 - Surface Water	AS1
E2 - External Moisture	AS1
E3 - Internal Moisture	AS1
F2 - Hazardous Building Materials	AS1
F5 - Construction and Demolition Hazards	AS1
G1 - Personal Hygiene	AS1
G2 - Laundering	AS1
G3 - Food Preparation	AS1
G4 - Ventilation	AS1
G5 - Interior Environment	AS1
G7 - Natural Light	AS1
G8 - Artificial Light	AS1
G9 - Electricity	AS1
G12 - Water Supplies	AS1
G13 - Foul Water	AS3
H1 - Energy Efficiency	AS1
Waiver / Modification Required:	N/A

Compliance schedule

There are no specified systems in the building.

Attachments

The following documents are attached to this application:

Plans and specifications

1. Plans.pdf (9.08M)
2. SPECIFICATION_-EDGE_RANDELL.pdf (18.26M)

Record of title

1. 912640_Title_Search_Copy_cheaptitles.co.nz.pdf (310.64K)

Restricted building work memorandums / Owner-builder declaration

1. 17644_BC_Documents_2021-03-29.pdf (1.01M)
2. EDGE_RANDELL_LBP_MEMO.pdf (153.99K)

Supporting documents

1. Consent_Notice.pdf (489.00K)
2. H1_ENERGY_EFFICIENCY_-_EDGE_RANDELL.pdf (463.26K)
3. Edge_KDC_Vehicle_Crossing_Application.pdf (274.00K)

4. Report_-_Site_Suitability.pdf (15.48M)
5. Edge_Randell_-_Truss_Design.pdf (1.83M)
6. Edge_Water_Meter_Application.pdf (289.80K)

Approvals from other authorities
1. Edge_Authorisation.pdf (294.79K)

Building Consent Application: 78714207BP

Date Submitted: Wednesday, 31 March 2021

FORM PLG 1

National Environmental Standard (NES) for Assessing and Managing Contaminants in Soil to Protect Human Health

For assistance in answering these questions please refer to (PLG 1A)

Please note that any inaccuracies may result in the applicant being in breach of the Resource Management Act 1991 and/or exposed to liability if the site is subsequently found to be contaminated, including being liable for remedial works.

Is the building work and all associated activities:

Changing the use of the land? **YES**

(Please note that "changing the use of the land" includes erecting a dwelling on an area of land which previously had no dwelling erected upon it.)

Disturbing soil? **NO**

(more than 25m3 per 500m2 of land) or removing soil? (more than 5m3 per 500m2 of land) (e.g.: foundations, on-site effluent treatment and disposal systems, wells or bores)

Is the land currently being used, has been used in the past, or is likely to have been used for an activity described on the HAIL?

NO

For more information on this process please contact the Duty Planner on 09 439 3123 or go the Ministry for the Environment website: http://www.mfe.govt.nz/laws/standards/contaminants-in-soil/

Signature

The name below as AGENT has the authority for the application to proceed to processing and accept the associated charges.

Signed By:

Juileanne Mollet

31 Mar 2021

The Agent will be the first point of contact for communications with the Council/Building Consent authority regarding this application / building work and will receive all correspondence including all invoices.

File: 17644

29 March 2021

To whom it may concern,

Proposed New Dwelling – Sampsons Way, Dargaville - Lot 8 DP 542244

We have supplied a Producer Statement for Design (PS1) for Clause B1 of the New Zealand Building Code.

We are not able to provide a PS1 covering Clause B2 as there is no effective verification method for B2 contained within the Building Code. However, we supply this letter to confirm that for the structural elements shown in our documentation, and covered by our PS1:

Timber – Timber treatment has been selected in accordance with Table 1 of NZS 3602:2003, Table 1A of NZBC B2/AS1, and NZS 3640:2003, as applicable.

Concrete – Concrete strength and covers have been selected in accordance with Section 3 of NZS 3101:Part 1, and Section 4.5 of NZS 3604:2011 as applicable.

Inspections required by RS Eng Ltd are listed as follows:

- Site preparation
  - Stripped site inspection
  - Hardfill building platform inspection
  - RibRaft pre-pour

We expect that all other aspects of the build will be covered by the usual KDC inspections.

Yours faithfully

Steven Turner
Chartered Professional Engineer
RS Eng Limited

MEMORANDUM OF DESIGN OF RESTRICTED BUILDING WORK FROM LICENSED BUILDING PRACTIONER (LBP)

The Building: New Dwelling – Sampsons Way, Dargaville – Lot 8 DP 542244

The Owner: Rachyl Edge & Regan Randell

LBP: Steven Turner, CPEng Reg No.87465, for RS Eng Ltd, email: steve@RSEng.co.nz Phone 09 438 3273

Practice Area: Structural, Civil, Site Assessment of Natural Hazards

Design Legal Entity: RS Eng Ltd, 2 Seaview Road Whangarei 0110, Phone 09 438 3273

Identification of design work that is Restricted Building Work

Description of Restricted Building Work	BC Clause	Means of compliance	Reliance on other LBPs	Reliance on Proprietary Elements	Waiver
Structural calculations as outlined in calculations. Job Ref. #17644	B1	NZ standards: AS/NZS 1170, NZS 3603, NZS 3604		Firth RibRaft data MiTek data	

Accompanying Documents

Drawing Register	☐	Specifications	☐	PS 1	☑	
Drawings	☑	Design Report	☐	PS 2	☐	By ……..……..
Calculations	☑	Geotechnical Report	☐	Other	☐	

Declaration

I, Steven Turner for RS Eng Ltd, LBP state that I have applied the skill and care reasonably required of a competent design professional in carrying out or supervising the Restricted Building Work described on this form and that based on this I also state that the RBW:
(a) complies with the Building Code clauses identified on this form; or
(b) complies with the Building Code subject to any waiver or modification of the Building Code recorded on this form.

Signature: 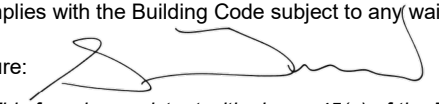 Date: 29 March 2021

Note: This form is consistent with clause 45(a) of the Building Act 2004. The form shall only be used for residential projects less than 10 metres high.

Building Code Clause(s) B1

PRODUCER STATEMENT – PS1 – DESIGN

ISSUED BY: RS Eng Ltd
(Design Firm)

TO: GJ Gardner Homes
(Owner/Developer)

TO BE SUPPLIED TO: Kaipara District Council
(Building Consent Authority)

IN RESPECT OF: New Dwelling
(Description of Building Work)

AT: Sampsons Way
(Address)

Town/City: Dargaville (Address) **LOT** 8 **DP** 542244 **SO**

We have been engaged by the owner/developer referred to above to provide:

Structural calculations, refer RS Eng Ltd job Ref: 17644

(Extent of Engagement)

services in respect of the requirements of Clause(s) B1/VM1 of the Building Code for:

☐ All or ■ Part only (as specified in the attachment to this statement), of the proposed building work.

The design carried out by us has been prepared in accordance with:

■ Compliance Documents issued by the Ministry of Business, Innovation & Employment B1/VM1, B1/VM4 (verification method/acceptable solution) or

☐ Alternative solution as per the attached schedule

The proposed building work covered by this producer statement is described on the drawings titled:

Rachyl Edge & Regan Randell, Lot 8, Sampsons Way, Dargaville and numbered Sheets 6, 23, 24, 25, 26;
together with the specification, and other documents set out in the schedule attached to this statement.

On behalf of the Design Firm, and subject to:
(i) Site verification of the following design assumptions Geotechnical Report by Hawthorn Geddes, Ref:11546, Dated 27/8/2018
(ii) All proprietary products meeting their performance specification requirements;

I believe on reasonable grounds that a) the building, if constructed in accordance with the drawings, specifications, and other documents provided or listed in the attached schedule, will comply with the relevant provisions of the Building Code and that b), the persons who have undertaken the design have the necessary competency to do so. I also recommend the following level of construction monitoring/observation:

☐ CM1 ■ CM2 ☐ CM3 ☐ CM4 ☐ CM5 (Engineering Categories)

I, Steven Turner (Name of Design Professional) am: ■ CPEng # 87465

I am a member of: ■ Engineering New Zealand and hold the following qualifications: ~~BE (Civil), IntPE, CPEng, CMEngNZ~~

The Design Firm issuing this statement holds a current policy of Professional Indemnity Insurance no less than $200,000*.
The Design Firm is a member of ACE New Zealand: ■

SIGNED BY Steven Turner (Name of Design Professional) (Signature)

ON BEHALF OF RS Eng Ltd (Design Firm) Date 29/03/2021

Note: This statement shall only be relied upon by the Building Consent Authority named above. Liability under this statement accrues to the Design Firm only. The total maximum amount of damages payable arising from this statement and all other statements provided to the Building Consent Authority in relation to this building work, whether in contract, tort or otherwise (including negligence), is limited to the sum of $200,000.*

This form is to accompany **Form 2 of the Building (Forms) Regulations 2004** for the application of a Building Consent.

THIS FORM AND ITS CONDITIONS ARE COPYRIGHT TO ACE NEW ZEALAND AND ENGINEERING NEW ZEALAND

RECORD OF TITLE
UNDER LAND TRANSFER ACT 2017
FREEHOLD

Search Copy

R.W. Muir
Registrar-General
of Land

Identifier **912640**

Land Registration District **North Auckland**

Date Issued 05 June 2020

Prior References
NA62D/391

Estate Fee Simple

Area 619 square metres more or less

Legal Description Lot 8 Deposited Plan 542244

Registered Owners

Regan John Randell and Rachyl Irene Edge

Interests

11765180.3 Consent Notice pursuant to Section 221 Resource Management Act 1991 - 5.6.2020 at 12:20 pm

Land Covenant in Covenant Instrument 11765180.4 - 5.6.2020 at 12:20 pm

Appurtenant hereto is a right of way, a right to convey electricity, telecommunications and water and a right to drain water and sewage created by Easement Instrument 11765180.7 - 5.6.2020 at 12:20 pm

The easements created by Easement Instrument 11765180.7 are subject to Section 243 (a) Resource Management Act 1991

11959861.2 Mortgage to ASB Bank Limited - 21.12.2020 at 1:26 pm

Identifier **912640**

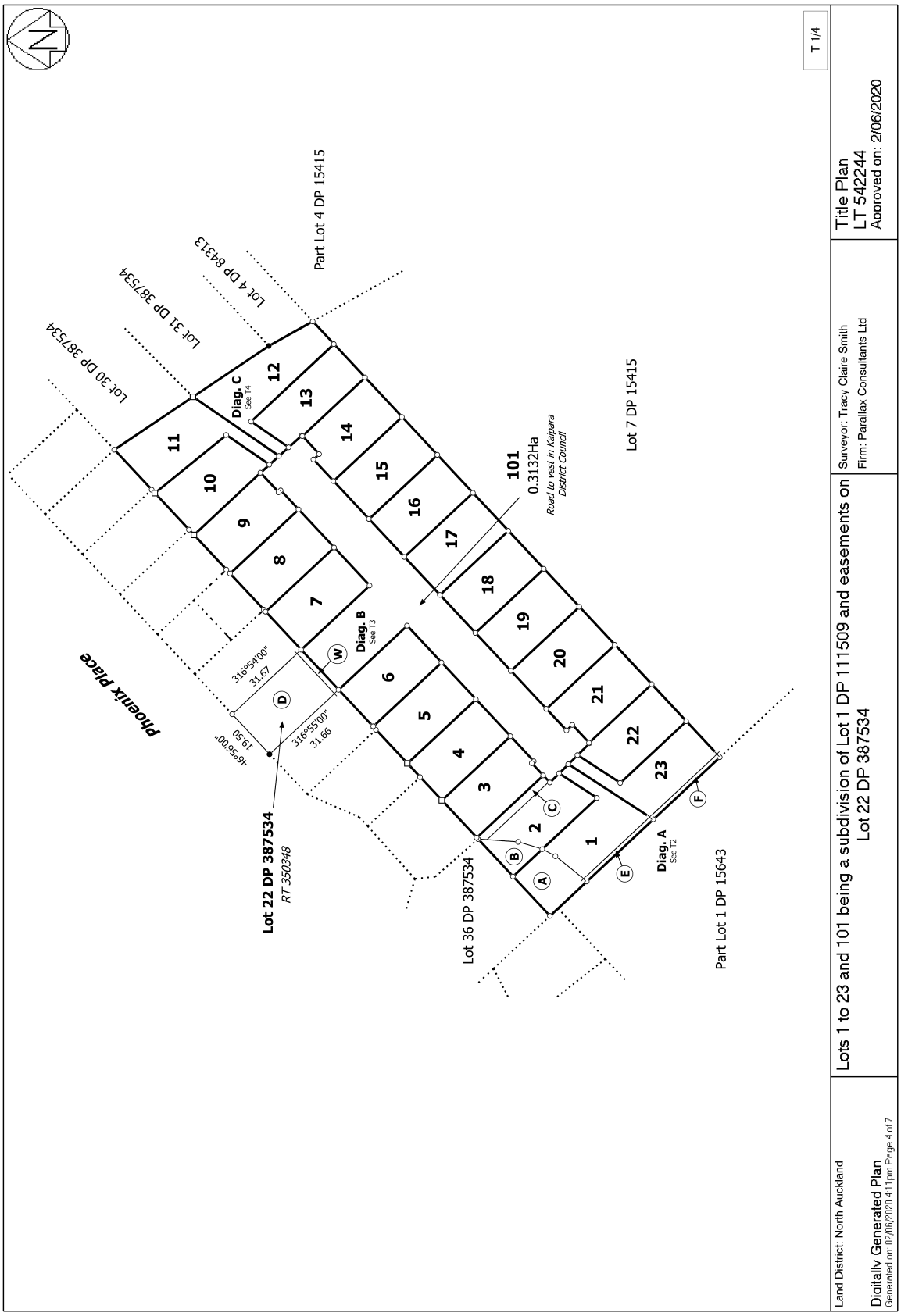

Identifier **912640**

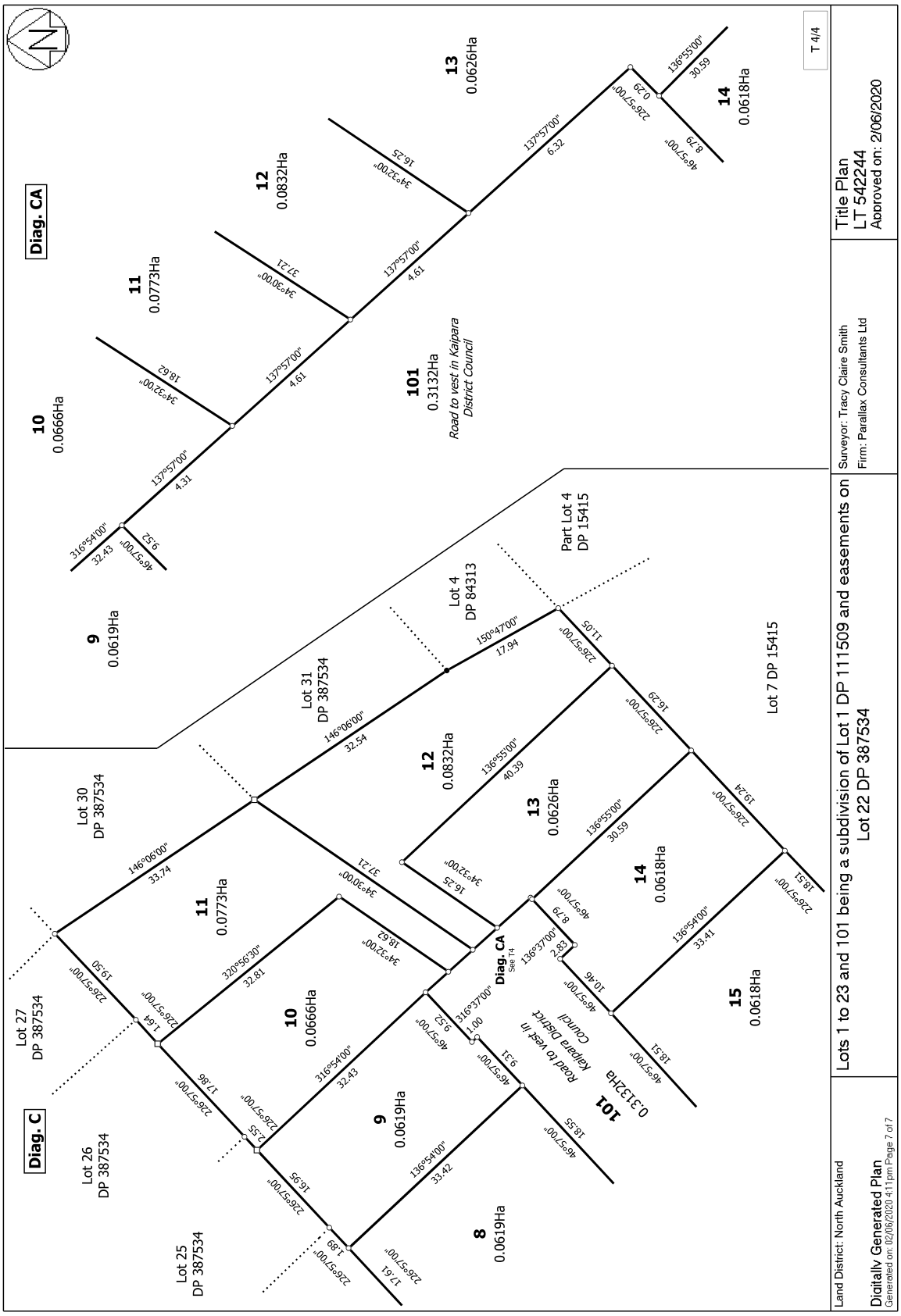

Thursday, November 26, 2020

The Building Department

TO WHOM IT MAY CONCERN

Dear Sir/Madam,

Re: Construction of Dwelling at Lot 8, TBA Sampsons Way, Dargaville
Job: nz22-390076

Please direct all correspondence - applications, plans, etc., relating to the construction of our dwelling, to our builder - Sudfelt Construction Limited on 094375666. Their address is 14 Percy St, Kensington, WHANGAREI, 0112.

Yours sincerely,

Rachel & Regan
PROPRIETOR(S)

Landonline

View Instrument Details

Land Information New Zealand

Instrument No.	11765180.3
Status	Registered
Date & Time Lodged	05 Jun 2020 12:20
Lodged By	Dempster, Vicki Marie
Instrument Type	Consent Notice under s221(4)(a) Resource Management Act 1991

Affected Records of Title	Land District
912633	North Auckland
912634	North Auckland
912635	North Auckland
912636	North Auckland
912637	North Auckland
912638	North Auckland
912639	North Auckland
912640	North Auckland
912641	North Auckland
912642	North Auckland
912643	North Auckland
912644	North Auckland
912645	North Auckland
912646	North Auckland
912647	North Auckland
912648	North Auckland
912649	North Auckland
912650	North Auckland
912651	North Auckland
912652	North Auckland
912653	North Auckland
912654	North Auckland
912655	North Auckland

Annexure Schedule Contains 3 Pages.

Signature

Signed by Vicki Marie Dempster as Territorial Authority Representative on 04/06/2020 09:57 AM

***** End of Report *****

© Copyright: Land Information New Zealand

IN THE MATTER of the Resource Management Act 1991 ("**Act**")

AND

IN THE MATTER of the subdivision of land shown in Deposited Plan 542244 (North Auckland Registry) ("**Plan**")

CONSENT NOTICE
(Section 221 of the Act)

KAIPARA DISTRICT COUNCIL ("**Council**") being the territorial authority of the district within which the land described in the First Schedule below ("**Land**") is located has consented to the subdivision of the Land as shown in the Plan subject to the conditions of the Second Schedule below to be complied with on a continuing basis by the Owner (as defined in the Act).

FIRST SCHEDULE
(Land)

ALL the land being Lot 22 Deposited Plan 387534 comprised in Identifier 350348 and Lot 1 Deposited Plan 111609 comprised in Identifier NA62D/391.

SECOND SCHEDULE
(Conditions)

The Owner (as defined in the Act) must, on a continuing basis, to the satisfaction of the Council, comply with the following conditions of the Council's Subdivision Consent RM180003A, namely:

1. In respect of all lots 1 to 23 (inclusive) on the Plan:

1.1 Earthworks, the location of buildings, building foundations and storm water to be subject to specific engineering design by a suitably qualified Chartered Professional Engineer having regard to any soil instability/saturation issues that may exist or arise as a result of the development. Design should take into account any of the recommendations identified in the Geotechnical Investigation and Engineering Report (Reference 11546), dated 27 August 2018, prepared by Hawthorn Geddes.

1.2 Each lot will require specific foundation design at Building Consent stage to ensure that future dwellings are designed and constructed with due accordance paid to the highly sensitive nature of the sub soils present on the site.

1.3 No vehicle crossing(s) is provided to the lots. All lots must form a complying vehicle crossing consistent with the Kaipara District Council Engineering Standard 2011 at the time of the construction of a dwelling. Prior to commencement of any construction work, in relation to vehicle crossings, the owner(s) shall have a vehicle crossing permit for each lot and shall enter into a Bond in a form to the approval of Council guaranteeing that in the event of damage to existing Council assets or abandonment of the work by the consent holder, that all existing Council assets will be returned to a condition at least equal to that which existed prior to the commencement of work. The bond shall be for the sum of $5,000 and shall remain in full force and effect until such time as all work has been completed and any necessary remedial work completed to the satisfaction of Council

2. In respect of Lots 1 and 12 to 23 (inclusive) on the Plan (each a "Lot"):

2.1 The owner(s) shall not and nor shall any occupier of or visitor to the Lot make, and surrenders the right to make, a complaint to the relevant consent authority or the Environment Court, as to any reverse sensitivity effects, including any emission of noise, vibration or any effect associated with any activity which is expressly allowed by a rule in a regional or District Plan, a resource consent, a designation, or regulations made under the Resource Management Act 1991 ('RMA') and shall not seek that a declaration or enforcement order be made by the Environment Court under sections 311 or 316 of the RMA, nor seek that an abatement or infringement notice be served by a duly authorised enforcement officer under sections 322 or 343C of the RMA, or that criminal proceedings be commenced in the District Court by the relevant consent authority under section 338 of the RMA in respect of any lawful activity carried out by the Dargaville High School; (Lot 7 DP 15415; Lot 1 DP 28811; Lot 4 DP 36061; PT Lot 13 DP 14511; PT Lot 8 DP 15415; PT Lot 1 DP 1 5643).

2.2 The owner of a Lot shall not be a party to, finance or contribute to the costs of any complaint, application for other proceedings or process specified in condition 2.1 above.

2.3 Any future dwelling shall have double glazing on all habitable room windows located on the south eastern and south western sides of the dwelling (the sides of the dwelling facing the

Dargaville High School property, being Lot 7 DP 15415; Lot 1 DP 28611; Lot 4 DP 36061; PT Lot 13 DP 14511; PT Lot 8 DP 15415; PT Lot 1 DP 1 5643).

2.4 Screening shall be undertaken that consists of a 1.8m high solid fence or a minimum 1.8m high planting, of no less than 1 metre depth along the west and south eastern boundary bordering the Dargaville High School property (being Lot 7 DP 15415; Lot 1 DP 28611; Lot 4 DP 36061; PT Lot 13 DP 14511; PT Lot 8 DP 15415; PT Lot 1 DP 1 5643).

DATED the 5th day of May 2020

SIGNED by the Council
by its authorised signatory

Dina Tetzner

View Instrument Details

Instrument No.	11765180.4
Status	Registered
Date & Time Lodged	05 Jun 2020 12:20
Lodged By	Dempster, Vicki Marie
Instrument Type	Land Covenant under s116(1)(a) or (b) Land Transfer Act 2017

Affected Records of Title	Land District
912633	North Auckland
912634	North Auckland
912635	North Auckland
912636	North Auckland
912637	North Auckland
912638	North Auckland
912639	North Auckland
912640	North Auckland
912641	North Auckland
912642	North Auckland
912643	North Auckland
912644	North Auckland
912645	North Auckland
912646	North Auckland
912647	North Auckland
912648	North Auckland
912649	North Auckland
912650	North Auckland
912651	North Auckland
912652	North Auckland
912653	North Auckland
912654	North Auckland
912655	North Auckland

Annexure Schedule Contains 6 Pages.

Covenantor Certifications

I certify that I have the authority to act for the Covenantor and that the party has the legal capacity to authorise me to lodge this instrument ☑

I certify that I have taken reasonable steps to confirm the identity of the person who gave me authority to lodge this instrument ☑

I certify that any statutory provisions specified by the Registrar for this class of instrument have been complied with or do not apply ☑

I certify that I hold evidence showing the truth of the certifications I have given and will retain that evidence for the prescribed period ☑

Signature

Signed by Vicki Marie Dempster as Covenantor Representative on 04/06/2020 09:42 AM

Covenantee Certifications

I certify that I have the authority to act for the Covenantee and that the party has the legal capacity to authorise me to lodge this instrument ☑

I certify that I have taken reasonable steps to confirm the identity of the person who gave me authority to lodge this instrument ☑

I certify that any statutory provisions specified by the Registrar for this class of instrument have been complied with or do not apply ☑

I certify that I hold evidence showing the truth of the certifications I have given and will retain that evidence for the prescribed period ☑

Signature

Signed by Vicki Marie Dempster as Covenantee Representative on 04/06/2020 09:42 AM

***** End of Report *****

MEMORANDUM FROM LICENSED BUILDING PRACTITIONER: CERTIFICATE OF DESIGN WORK (Form 2A)

Section 30C or 45, Building Act 2004.

1. Where is the building? *Complete all fields*

Street address of building:	Lot 8, Sampsons Way Dargaville - Kaipara
Building consent number:	

2. Who owns the building? *Complete all fields, using N/A where not applicable*

Owner name:	Rachel Edge & Regan Randell	Title: e.g. Mr, Mrs, Ms, Dr	
Owner email address:	whangarei@gjgardner.co.nz		
Owner contact numbers:	Ph: (09) 437 5666	Cell:	
Owner mailing address:	14 Percy Street Kensington - WHANGAREI		

3. What work have you carried out / supervised? *Complete as appropriate*

I carried out/supervised the following design work that is restricted building work:

	Design Work that is restricted building work *Tick as applicable or enter N/A*				Description of restricted building work	Carried out / supervised	Reference to plans / specifications
					Complete these fields if the previous column is ticked		
Primary structure	✔	Yes	☐	No			
Foundations / subfloor framing	☐	Yes	✔	No	Ribraft slab	Engineered	Engineering
Walls	✔	Yes	☐	No	Timber framing	Carried Out	Sections
Roof	✔	Yes	☐	No	Truss framing	Supervised	Roof Plan
Columns / beams	☐	Yes	✔	No	-	-	-
Bracing	✔	Yes	☐	No	Gib bracing system	Carried Out	Bracing Plan
Other	☐	Yes	✔	No	-	-	-
External moisture management systems	✔	Yes	☐	No			
Damp proofing	✔	Yes	☐	No	DPC to u/s of plate	Carried Out	Details
Roof cladding or roof cladding system	✔	Yes	☐	No	Metal tiling	Carried Out	Details
Ventilation system (for example, subfloor or cavity)	✔	Yes	☐	No	Cavity system to wall claddings	Carried Out	Details
Wall cladding or wall cladding system	✔	Yes	☐	No	Brick Veneer	Carried Out	Details
Waterproofing	☐	Yes	✔	No	-	-	-
Other	☐	Yes	✔	No	-	-	-
Fire safety systems	☐	Yes	✔	No	-	-	-

Emergency warning systems, evacuation and fire service operation systems, suppression, control systems, or other	☐	Yes	☑	No	-	-	-
Note: The design of fire safety systems is only restricted building work when it involves small-to-medium apartment buildings as defined by the Building (Definition of Restricted Building Work) Order 2011.							
Are waivers or modifications of the building code required?	☐	Yes	☑	No			
If Yes, please provide details including relevant code clauses							
Clause: -					Waiver/modification required: -		

4. What are your details? *Complete all fields or enter N/A where not applicable*

Licensed Building Practitioner name:	Conrad Lienert	Licensed Building Practitioner number:	BP113635
Registered Architect number:	-	Chartered Professional Engineer number:	-
Mailing address:	133, Mangaroa Valley Road. Upper Hutt. - WELLINGTON -		
Street address or registered office:	133, Mangaroa Valley Road. Upper Hutt. - WELLINGTON -		
Contact numbers:	Ph:-	Cell:021 499 203	
Email address:	conrad_lienert_design@hotmail.com		

5. Declaration

I, Conrad Lienert [*name of Licensed Building Practitioner*], certify that the design work that is restricted building work recorded on this form—

(a) complies with the building code; or

(b) complies with the building code subject to any waiver or modification of the building code recorded on this form.

Signature:	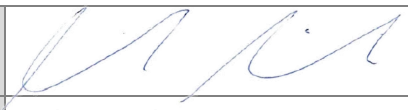
Date:	24th March 2021

You can add a digital signature to this document, either using Adobe or your existing digital signature.

Once you have filled out the form, including signatures, please save the application to your computer. You can then submit the application with supporting documentation to your local council.

If you are unsure about what information to include in your application, a guidance document is available (click here).

G.J. Gardner.
HOMES

G J Gardner Homes Whangarei / Kaipara

P R O J E C T S P E C I F I C A T I O N

EDGE & RANDELL

SAMPSONS WAY
DARGAVILLE
KAIPARA

Issued for Consent

390076

PROJECT OVERVIEW

Scope

Single storey timber framed dwelling in general accordance with NZS3604:2011 including SED MiTek truss design completed by Carters.

Dwelling constructed on specifically deisgned Firth Ribraft concrete slab.

The proposed dwelling is clad in 70 Series Brick over a 50mm drained cavity and a Gerard pressed metal tile roof.

The proposed dwelling is in general accordance with the New Zealand Building Code acceptable solutions where possible, with minor alterations to typical details providing alternative solutions with the intent to exceed the minimum performance requirements.

Address

Site Address	SAMPSONS WAY
Suburb	DARGAVILLE
City	KAIPARA
Lot #	8
DP #	542244

Site Conditions

Wind Zone	H - High Wind Speed
Earthquake Zone	Zone 1
Exposure Zone	Zone C - Medium
Snow Loading Zone	Zone N0

Related Parties

Engineer

Mitek, In Ling Ng, CPEng 146585, 40 Neales Road, East Tamiki, Auckland, 2163, 09 274 7109

Engineer

R S Eng, Steve Turner, CPEng 87465, steve@rseng.co.nz, 2 Seaview Road, Whangarei, 0110, 09 437 3273

Designer

Conrad Lienert, BP113635, conrad_lienert_design@hotmail.com, Mangaroa, Upper Hutt, 5371

© Smartspec 2021

TABLE OF CONTENTS

Siteworks 5
Siteworks 5
Concrete 9
Ribraft Concrete Floors 9
Brickwork 11
Brickwork 11
Underlay, Foil & DPC 13
Waterproofing 15
Interior Wet Area Waterproofing Membrane Systems 15
Carpentry 18
Timber Framing 19
GIB® Rondo® Metal Batten Systems 22
GIB® Plasterboard Linings 24
GIB Aqualine® Wet Area Systems 30
Aluminium Joinery 33
Aluminium Windows & Doors from APL Window Solutions 34
Insulation 37
Thermal Insulation 37
Plumbing 39
Workmanship 39
Drainlaying 40
Foul Water Drainage 40
Stormwater Drainage 44
Electrical 48
Workmanship 49
Appendix 50
BRANZ Apprasial No.812 (2019) - Sikalastic Interior Waterproofing System 50
Clearlite Shower Shower Tray Installation 50
Clearlite Shower Wall Liner Installation 50
Sikalastic Interior Waterproofing System Installation Details 50
Sika BlackSeal Plus - Slab Edge Waterproofing Membrane 50
Roof Cladding 50
Dektite - Pipe Penetration for Pressed Metal Tile 50
Masons - Window Flashing Tape - Codemark Certificate 50
Thermakraft 215 - Roofing Underlay 50
BRANZ Apprasial No.548 (2019) - Tekton Building Wrap 50
Masons - Window Flashing Tape - Installation 50
DPC - Malthoid Damp Proof Course 50
Lumberlok Stud to Top Plate Fixing Schedule 50
Ecoply - EP1 50
Ecoply - EPG 50
GIB - GS1-N 50
Pipe Materials for Hot & Cold Water 50
Rheem 180l Mains Pressure HWC 50
E1/AS1 - Bedding and Backfilling 50
Brick Specification 50
CodeMark Certificate of Conformity - Firth Ribraft® Floor System 50
BRANZ Appraisal No.928 (2016) - GIB EzyBrace Systems 2016 50
BRANZ Appraisal No.427 (2007) - GIB Aqualine Wet Area Systems 50

BRANZ Appraisal No.427 (2007) - GIB Aqualine® Wet Area Systems.....50

1 SITEWORKS

1.1 Preliminary

Refer to General Conditions of Contract and the Special Conditions in this Specification as appropriate. Read this section in conjunction with all other trade sections.

1.2 Compliance

Comply with the New Zealand Building Code 1992 including all revisions and amendments, Verification Methods where appropriate, and construction principles that are embodied in the Acceptable Solutions.

Comply with all relevant provisions and recommendations of:

4402.4.1.1:1986(NZS)	Soil compaction tests - Determination of the dry density/water content relationship - Test 4.1.1 New Zealand standard compaction test
4431:1989(NZS)	Code of practice for earth fill for residential development
NZBC B1	Structure
NZBC E1	Surface Water

1.3 Siteworks

1.3.1 Scope

This section sets out the general requirements for sitework necessary for the satisfactory completion of the contract works. All aspects of this work shall be carried out to comply with all statutory obligations and regulations of regulatory bodies controlling the execution of the contract works, and in accordance with the project design documentation.

1.3.2 Requirements

1.3.2.1 Safety

Comply with the Health and Safety at Work Act 2015 (HSWA), and with all relevant Health and Safety at Work Regulations 2016, and with all relevant WorkSafe New Zealand (WorkSafe) Approved Codes of Practice and WorkSafe Information and Guidance, in particular the 'OSH Guidelines For the Provision of Facilities and General Safety in the Construction Industry'.

Carry out all construction operations in accordance with the Contractor's project-specific Health and Safety Plan.

Where construction or demolition work presents a hazard in places to which the public has access, barriers shall be provided and shall:

(a) Be of appropriate height and construction to prevent site hazards from harming traffic or passersby (2.0m or higher)

(b) Be difficult to climb (Linkmesh fence)

(c) Have no openings other than those approved by the territorial authority for access and viewing (Access fence at entry)

(d) Have no gates or doors which project beyond the site when opened

(e) Contain no projection that would be a hazard to traffic or people, and (f) Be clearly marked where the barrier itself may otherwise present a hazard to traffic or passersby.

Where a construction or demolition site contains any hazard which might be expected to attract the unauthorised entry of children, the hazard shall be enclosed to restrict access by children.

1.3.2.2 Geotechnical Report

A geotechnical investigation of the site has been carried out - refer to the Geotechnical Report appended.

1.3.2.3 Stormwater & Sediment Control

Ensure the environmental protection of the site during the works. Carry out construction works and operations to ensure that they fully comply with the relevant controlling environmental authority's sediment control and stormwater discharge guidelines.

Provide suitable measures to prevent or minimise sediment generation and silt runoff in accordance with the requirements of the controlling Territorial Authority. Where required, detailed design of mitigation measures such as fences, cut off ditches, detention ponds, etc., shall be undertaken by a suitably qualified person employed by the Contractor.

Erosion and sediment control measures shall be maintained and remain in place until surface reinstatement has been established. If at any time the performance of the stormwater and sediment control measures, or ongoing review of them, indicates that they need to be extended or modified, the design modification and construction of these shall be undertaken by the Contractor at no extra cost to the Principal.

Basic management principles shall be implemented, in particular:
- areas being exposed at any one time shall be kept to a minimum;
- diversion ditches and catch drains or earth bunds to intercept and divert upslope stormwater runoff around areas of earthworks;
- waterborne silt captured by filter mesh fences, hay bales, vegetation buffer strips or settlement ponds/areas, in a way that manages adverse downstream effects;
- stockpiles of topsoil, excavated earth or other material shall not be positioned where they can be eroded or washed into any drain or watercourse.
- only pump water from trenches and detention areas using methods to prevent sediment entering any drain or watercourse.
- all soil-contaminated water shall be properly filtered before discharging into the stormwater drainage system.

1.3.3 Clearing & Stripping

1.3.3.1 Clearing

Remove from the site all vegetation and obstructions within the area of the earthworks that are not designated as remaining in the contract documents.

Clearing shall be carried out as a separate operation before stripping and excavation. Clearing shall include complete removal from the site of lightweight structures, foundations, trees, tree stumps, logs, roots, scrub, grass and other vegetation, paving materials, fences and rubbish, and the off-site disposal of such items.

The removal of surface grass and weeds shall be completed as part of the topsoil stripping operation.

All trees within the limits of the earthworks shall be removed unless designated as remaining by the Contract Administrator and contract documents.

Protect trees and other vegetation designated as remaining within the earthworks area, and trees and other vegetation beyond the limits of the earthworks, from damage by these operations.

Extraction of tree stumps (if any) shall include the removal of roots greater than 25mm diameter.

1.3.4 Excavation

1.3.4.1 Excavation General

Excavate out all ground material above the finished levels or contours indicated on the design drawings, making due allowance for the construction of foundations, ground slabs, retaining walls, hard paving, underground utilities, landscaping and reinstatement of topsoil. The manner of excavations is the responsibility of the Contractor.

Excavation, as a minimum, shall include stripping of the site to remove all rubbish, noxious material and organic material, including topsoil, covering the area where the buildings, paving and other work is to be placed.

Excavations shall be undertaken in accordance with the 'Excavation Safety - Good Practice Guidelines'.

As necessary, cross reference and coordinate excavation work with the design drawings - Architectural, Structural, Building Services, Civil.

As necessary, coordinate excavation work with other trades as to set-out and timing to ensure that all cut faces are covered or finished etc. as soon as practicable after the excavation is complete.

If, in the opinion of the Contract Administrator, weather conditions or the excavation methods employed are such as to result in undue disturbance of adjacent ground or ground below final trimming level, suspend the work and complete the excavation in accordance with the Contract Administrator's instructions.

1.3.4.2 Excavation for Foundations

Foundation excavations shall be accurately cut true to line, level and angle, to minimum sizes and to the levels and grades required for all slabs, footings and foundations, and over the rest of the areas shown for levels adjustment. Foundation excavations shall extend down to firm undisturbed ground to the required depth. Refer to the foundation layout and details shown on the drawings.

1.3.5 Earth Fill

1.3.5.1 Compliance & Testing

Earth fill works shall be carried out in accordance with NZS 4431 and the conditions of the Resource Consent/Building Consent. The Contractor is responsible for all associated earth fill testing and compliance.

2 CONCRETE

2.1 Preliminary

Refer to General Conditions of Contract and the Special Conditions in this Specification as appropriate. Read this section in conjunction with all other trade sections.

2.2 Compliance

Comply with the New Zealand Building Code 1992 including all revisions and amendments, Verification Methods where appropriate, and construction principles that are embodied in the Acceptable Solutions.

Comply with all relevant provisions and recommendations of:

3101.1&2:2006(NZS)	Concrete Structures Standard
3104:2003(NZS)	Specification for concrete production
3109:1997(NZS)	Concrete construction
3114:1987(NZS)	Specification for concrete surface finishes
3604:2011(NZS)	Timber-framed buildings
4671:2019(AS|NZS)	Steel for the reinforcement of concrete

2.3 Ribraft Concrete Floors

2.3.1 Scope

Supply the required/selected Firth RibRaft components and construct the concrete on-ground floor slab as shown on the drawings. All aspects of this work shall be in accordance with the Firth RibRaft Technical Manual (check www.firth.co.nz or call 0800 800576 for the latest edition), a copy of which must be held on site (and referenced for any aspect where there is the slightest uncertainty), the RibRaft Floor System CodeMark Certificate of Conformity - Certificate No:CM40015-102-R00, and as shown on the drawings.

No Substitutions are permitted for Firth RibRaft Floor System.

2.3.2 Selections

2.3.2.1 220mm Pod Thickness - Specific Engineering Design

Pods thickness: 220mm
DPM: as per NZS 3604:2011
Slab thickness above pods: 90mm
Slab finish: U3

2.3.3 Installation

2.3.3.1 Installation

All RibRaft installation work shall be carried out by experienced and competent tradesmen, familiar with the techniques and materials specified, in accordance with Firth RibRaft Technical Manual and as shown on the drawings. All handling, preparatory blinding DPM, formwork and reinforcing, and concreting and finishing techniques shall be exactly as recommended by Firth Industries Ltd.
Notify the BCA for inspection of the excavation and of the Ribraft slab ready for pouring, and keep whatever records or test results they may require.

Check that all topsoil etc. has been removed from the RibRaft slab location and that the excavated (or hardfill made-up where necessary) platform is level and approximately 330mm below the required finished floor level. Co-ordinate with other trades to ensure that any wastewater drains or other piped or wired service lines are correctly incorporated (and fully operationally tested as appropriate) as work proceeds.

Place and compact any hardfill or basecourse required by the Engineer for specific design. Blind the surface with up to 50mm of sand, and compact (and adjust if necessary) to accurately level, carrying the sand blinding to at least 500mm beyond the RibRaft perimeter.

Lay the specified DPM over the entire platform and extending at least 200mm beyond the RibRaft perimeter, with strips lapped 150mm and 50mm PVC adhesive tape sealed, and any services penetrations tape sealed. Tape repair any damage to the DPM as soon as it occurs, and re-inspect/repair just before pouring. Construct the slab perimeter formwork as specified above and as detailed, including edge rebates and any slab cut-outs required.

Unload and handle components carefully to avoid any damage, and keep them clean until installed. Place the RibRaft pods in the grid pattern as shown on the layout plan, with Firth 300mm spacers to the perimeter and under loadbearing walls, and Firth 100mm spacers between all other pods. Neatly cut pods as required to infill where the shape or size of the slab does not match the 1.2m pods module.

Reinforce as specified and as noted on the drawings, ensuring the bars are positioned in the spacer lugs, install plumbing waste pipes etc. as required, and then install the reinforcing mesh over the top of the pods, seated on mesh chairs, and install the re-entrant corner steel (Grade 500E) across internal corners as noted. Install starters as detailed for any subsequent masonry walls, ensuring accurate positioning (as bending to masonry core positions is not acceptable).

Pour Firth RaftMix (or pump Firth RaftMix Pump), and vibrate and screed and finish as specified, and cure and install shrinkage control joints as specified or noted.
Remove trade debris from the area progressively; on completion leave the works area completely clean.

3 BRICKWORK

3.1 Preliminary

Refer to General Conditions of Contract and the Special Conditions in this Specification as appropriate. Read this section in conjunction with all other trade sections.

3.2 Compliance

Comply with the New Zealand Building Code 1992 including all revisions and amendments, Verification Methods where appropriate, and construction principles that are embodied in the Acceptable Solutions.

Comply with all relevant provisions and recommendations of:

2295:2006(NZS)	Pliable, permeable building underlays
2699.1:2000(AS/NZS)	Built-in components for masonry construction - Wall ties
2904:1995(AS/NZS)	Damp-proof courses and flashings
3103:1991(NZS)	Specification for sands for mortars and plasters
3604:2011(NZS)	Timber-framed buildings
4200.1:2017(AS|NZS)	Pliable building membranes and underlays - Part 1: Materials
4210:2001(NZS)	Masonry construction: Materials and workmanship
4236:2002(SNZHB)	Masonry veneer wall cladding
4389:2015(AS/NZS)	Roof safety mesh
4534:2006(AS/NZS)	Zinc and zinc/aluminium-alloy coatings on steel wire
NZBC B2	Durability
NZBC E2/AS1	External Moisture
NZMRM Code of Practice	NZ Metal Roof and Wall Cladding Code of Practice - Version 2.2

3.3 Brickwork

3.3.1 Scope

Supply and lay the selected bricks to form the brick elements as shown on the drawings. All aspects of this work shall be in accordance with the related compliance documents and as shown on the drawings.

3.3.2 Workmanship

Where required by the NZ Building Act 2004 it is the building contractor's responsibility to ensure that all restricted building work is carried out by a Licensed Building Practitioner.

All work shall only be carried out by Licensed Building Practitioners - Bricklaying and Blocklaying, and conform to the requirements of NZS 4210.

Submit evidence on request of experience, relevant qualifications, LBP Licence - Bricklaying & Blocklaying, New Zealand Masonry Trades Association (NZMTA) Member Registration.

Co-operate with the concretor and carpenter in the setting out of the works.
Co-operate with other trades to ensure that all preliminary and preparatory works, including all framing, membranes, wraps, rigid air barriers, and flashings, all relevant clearances, and any other related works, are completed to specification and as shown on the drawings.
Co-ordinate with trades the locations of pipes, outlets, cables, meter boards and other fittings installed by others.

All brick veneer walls shall be true to line, level and plumb, and within the tolerances tabled in NZS 4210 and SNZ HB4236. All brickwork laid to stretcher bond pattern, with joints width 10mm +/- 3mm.

3.3.3 Installation

Install all brickwork related damp proof courses in accordance with the requirements of NZBC E2/AS1 and to the details shown on the drawings.

Mortar shall have a minimum compressive strength of 12.5 MPa, and be manufactured from cement, sand, lime, and admixtures, and be accurately measured and mixed in accordance with NZS 4210. Mineral oxide pigment dosages shall be to NZS 4210.

Form all necessary openings, reveals, sills, weepholes, separation and control joints, and cavities to the locations and details shown on the drawings, and in accordance with the requirements of NZBC E2/AS1 and NZS 4210. Install necessary vermin stops. Weatherproof all separation joints to the details shown on the drawings.

Wall tie type, durability, spacing, fixing and installation shall be as defined in NZBC E2/AS1 Tables 18A, 18B, 18C, and NZS 4210.

Install all necessary flashings to openings, and other locations as required, to the details shown on the drawings and in accordance with NZBC E2/AS1 requirements in accordance with details on the working drawings.

On completion or the works leave brickwork clean and free of marks and staining. All brickwork cleaning shall be done to the brick manufacturer's recommendations.
Thoroughly clean all other surfaces affected by the brickworks.

3.3.4 Mortar Pointing

Mortar joints shall be raked out, pointed and tooled to a depth not exceeding 6mm after the initial stiffening has occurred.

3.4 Underlay, Foil & DPC

3.4.1 Scope

Supply and install Underlays, Foil and DPC materials, as specified herein, to the locations identified on the drawings, complete with all accessories required for proper installation and performance. All aspects of this work shall be in accordance with the product manufacturer's technical literature and installation requirements, other relevant product manufacturers' recommendations, and as shown on the design drawings.

This specification should be read in conjunction with other relevant specification sections as they are interrelated.

The following is a list and general description of the extent of the Underlays, Foil and DPC works, which are more specifically defined in the contract documents, required for the completion of the contract works:

3.4.2 DPM

3.4.2.1 Polyethylene DPM - Concrete Slab-on-Ground

Concrete Slab-on-Ground Damp Proof Membrane. Minimum 0.25mm (250µm) thick, tear resistant, polyethylene film sheet as per NZS 3604 7.5.6.

Installed as a moisture vapour barrier under concrete slabs on-ground (prior to concreting), over a properly prepared sub-base as required by NZS 3604: 7.5, by a Licensed Building Practitioner (LBP), in accordance with the manufacturer's requirements and as shown on the drawings.

All joins shall be lapped minimum 150mm and continuously sealed with a 48mm wide pressure sensitive PVC jointing tape. Tape-seal around DPM-penetrating pipes and sleeves. Take all reasonable measures to protect the DPM from damage during construction. Inspect DPM immediately before pouring concrete, and repair any perforations or damage in accordance with the manufacturer's instructions.

3.4.3 DPC

3.4.3.1 Bituminous DPC

Bituminous Damp Proof Course. Heavy-weight kraft paper saturated with and coated with high grade bitumen surfaced with talc or other suitable non-stick material, manufactured to AS/NZS 2904 and tested to AS/NZS 4347.0.

Used for separating timber and wood-based products and metal from concrete, masonry, brick, and stone surfaces; or for concealed flashings in masonry veneer cladding to NZBC E2/AS1; in accordance with the manufacturer's requirements and as shown on the drawings. Do not use bituminous DPC under LOSP treated timber materials.

3.4.4 Accessories

3.4.4.1 Joining & Sealing Tape - DPM

Joining & Sealing Tape - for Polyethylene DPM. Minimum 50mm wide, pressure-sensitive, self-adhesive, PVC joining and sealing tape. Used for sealing polyethylene damp proof membrane laps, penetrations, and repairs.

3.4.5 Preparation

3.4.5.1 Under-Slab Basecourse - DPM

Under-Slab Basecourse - prior to installation of DPM concrete underlay, check all aspects of preparatory works, including but not limited to:
- Check that the under-slab basecourse has been correctly laid and compacted as specified.
- Check that the surface has been properly prepared and finished to the required standard, and is smooth and flat.
- Ensure any sand blinding is free of aggregate, sharp protrusions.
- Ensure the final surface is free of hollows and ponded water.

3.4.6 Installation - Under-Slab DPM

3.4.6.1 Under-Slab DPM

Install under-slab damp proof membrane (DPM) in accordance with the manufacturer's requirements and as shown on the drawings.

Unless otherwise specified on the design drawings, under-slab DPM shall be laid in a single layer, over sand blinding, with all edges lapped minimum 150mm and sealed with minimum 50mm wide PVC sealing and joining tape, so as to achieve a continuous waterproof barrier over the entire area.

Seal all pipe, duct, and other services penetrations in the DPM using PVC sealing and joining tape.

Protect installed DPM as required during all stages of slab construction, and avoid puncturing or damaging. Tape-repair damaged DPM as soon as it occurs - tape over small punctures; patch large punctures and damaged areas with a DPM overlay section sealed all sides with PVC tape.

Inspect the DPM for damage just prior to concrete pouring and repair as necessary.

4 WATERPROOFING

4.1 Preliminary

Refer to General Conditions of Contract and the Special Conditions in this Specification as appropriate. Read this section in conjunction with all other trade sections.

4.2 Compliance

Comply with the New Zealand Building Code 1992 including all revisions and amendments, Verification Methods where appropriate, and construction principles that are embodied in the Acceptable Solutions.

Comply with all relevant provisions and recommendations of:

3740:2010(AS)	Waterproofing of domestic wet areas
4858:2004(AS/NZS)	Wet area membranes
NZBC B2/AS1	Durability
NZBC E3/AS1	Internal Moisture

4.3 Interior Wet Area Waterproofing Membrane Systems

4.3.1 Scope

Supply and install the specified Interior Wet Area Waterproofing System, to the locations shown on the drawings, complete with all accessories. All aspects of this work shall be in strict accordance with the manufacturer's technical guidelines, installation specifications and details, other relevant product manufacturers' recommendations, and as shown on the drawings.

No substitutions are permitted for the specified Interior Wet Area Waterproofing System.

4.3.2 Waterproofing System

Liquid-Applied Waterproofing Membrane System. A liquid applied, modified polyurethane, high-build acrylic, flexible waterproof membrane, suitable for residential and commercial interior wet area floor and wall applications to be subsequently tiled or otherwise covered and protected.

Installed as an interior wet area undertile waterproofing membrane system in accordance with the manufacturer's requirements, NZBC E3/AS1, AS 3740, and as shown on the drawings.

Brand & Product: Sikalastic Waterproofing Membrane

4.3.3 Co-operation

Co-operate with other trades to ensure that all preliminary and preparatory works are completed to specification and as shown on the drawings.

Coordinate with other trades to install the specified Interior Wet Area Waterproofing System as required.

4.3.4 Workmanship

All installation work shall be carried out by experienced contractors, authorised by the manufacturer, familiar with the specified products and installation techniques, to fully comply with all of the manufacturer's warranty requirements in accordance with the manufacturer's installation requirements and as noted and detailed on the drawings.

4.3.5 Delivery & Handling

Store products off the ground on a flat surface undercover, keep materials dry and out of direct sunlight, and protect from damage. Do not use damaged or faulty products, or products beyond the designated shelf life. Handle materials and products in accordance with the manufacturer's recommendations.

4.3.6 Installation

Liquid Applied Waterproofing Membrane System. Install the undertile membrane waterproofing system, including surface priming, membrane application, jointing, flashing and sealing etc., and system-supplied accessories in strict accordance with the manufacturer's installation requirements and details, and as shown on the drawings. Application and workmanship shall be in accordance with AS/NZS 4858:2004 and AS 3740:2004.

Substrates shall be free of dust, grease, wax, oil, dirt, loose plaster, laitance, curing compounds, paint and other contaminants likely to prevent proper bonding, and shall be structurally sound, securely fastened and properly supported to eliminate any movement which may cause cracking. Allow proprietary floor levelling compounds and screeds to cure in accordance with the manufacturer's recommendations prior to application.

Seal substrate corner junctions and substrate joints and fixings and visible cracks, with a suitable sealant. Prepare all substrate floor/wall junctions and sheet joints with a system-approved pressure sensitive bond breaker tape. Prime all surfaces with the specified system primer.

Apply the specified liquid-applied membrane undiluted on to a dry and primed substrate uniformly by brush or roller in accordance with the manufacturer's instructions.
Finish the membrane at control joints, floor wastes and drain outlets to the manufacturer's requirements. Consult the manufacturer regarding any detail where a standard system detail does not exist.

Allow to membrane dry in accordance with the manufacturer's requirements. Where required; carry out a full flood test prior to tiling. Protect the installed membrane as required; avoid puncturing or damaging when exposed - repair as necessary

4.3.7 Completion

Check that the internal wet area waterproofing system has been installed correctly, and that any system accessories are correctly installed and finished. Check for damage, repair or replace as necessary.
Leave the completed waterproofing system leak free and watertight.
Leave the working area clean and tidy ready for tiling, remove rubbish from site.

Advise the Main Contractor to protect the completed works from damage until tiling is completed.

Issue to the Owner a copy of the product and installation warranty for the completed works.

5 CARPENTRY

5.1 Preliminary

Refer to General Conditions of Contract and the Special Conditions in this Specification as appropriate. Read this section in conjunction with all other trade sections.

5.2 Compliance

Comply with the New Zealand Building Code 1992 including all revisions and amendments, Verification Methods where appropriate, and construction principles that are embodied in the Acceptable Solutions.

Comply with all relevant provisions and recommendations of:

1170.5:2004(NZS)	Structural design actions - Earthquake actions - New Zealand
2588:2018(AS|NZS)	Gypsum plasterboard
2589:2017(AS/NZS)	Gypsum linings - Application and finishing
2785:2000(AS/NZS)	Suspended ceilings - Design and installation
3601:1973(NZS)	Metric dimensions for timber
3602:2003(NZS)	Timber and wood-based products for use in building
3603:1993(NZS)	Timber Structures Standard
3604:2011(NZS)	Timber-framed buildings
3622:2004(NZS)	Verification of timber properties
3631:1988(NZS)	New Zealand timber grading rules
3640:2003(NZS)	Chemical preservation of round and sawn timber
4219:2009(NZS)	Seismic performance of engineering systems in buildings
4600:2018(AS|NZS)	Cold-formed steel structures
AS/NZS 1080.1:2012	Timber - Methods of test - Method 1: Moisture content
AWCI Code of Practice	For Design, Installation and Seismic Restraint of Suspended Ceilings
NASH Standard	Residential and Low-rise Steel Framing - Part 1: Design Criteria
NZBC B2	Durability
NZBC C/AS2-AS6	Protection from Fire
NZBC E3	Internal Moisture
NZBC G6	Airborne and Impact Sound

5.3 General

This section includes the receiving, stacking and storage of all Carpenter's materials and the fabrication, erection and fixing of all framing, sheathings and finishing timbers, including all work incidental to neatly finishing in other trades and all temporary work and temporary bracing.

The Carpenter shall attend upon all trades, and shall supply and fix all obviously necessary but not specifically mentioned fixings and materials.

5.4 Timber Framing

5.4.1 Scope

Supply and install timber framing to the floors, walls, roofs, and other timber framed elements, as identified and detailed on the drawings. All aspects of this work shall be in accordance with NZS 3604, product manufacturers' recommendations, all specific engineering desgin and as shown on the drawings and the specification.

5.4.2 Workmanship

Where required by the NZ Building Act 2004 it is the building contractor's responsibility to ensure that all restricted building work is carried out by a Licensed Building Practitioner.

All work shall be carried out to current best trade practise by experienced and competent tradesmen, familiar with the materials and installation techniques, in accordance with NZS 3604, other referenced New Zealand Standards within this document and as shown on the drawings.

5.4.3 Timber Framing

5.4.3.1 Timber Grade and Quality

Unless otherwise noted or specified on the drawings or specification, all framing timber shall be minimum structural grade SG 8 Radiata pine in accordance with NZS 3622.
Framing timber shall be seasoned or kiln dried, and be straight and true and free from wind, warp and distortion, and in lengths suitable for the members required, and shall have a moisture content of between 12% and 18% before installation.
Do not used damaged, faulty or defective materials.

5.4.3.2 Timber Treatment

All non-durable timber framing shall be appropriately treated against moisture and/or insect decay by treatment plants with recognised quality assurance systems that are administered by the Timber Preservation Council (NZTPC). Treatment of timber and wood-based building products shall be to the requirements of NZS 3602 as an absolute minimum, and all treated timber shall be identified and marked as required.
Carefully manage treated framing during installation to avoid accidental use of timber with a lower performance or durability treatment than that required or specified.

5.4.3.3 Concrete Separation

Separate timber framing with an approved continuous damp proof course when in direct contact with concrete or masonry. Ensure that the DPC material is compatible with the timber treatment.
Free draining separations to external vertical faces shall be 12mm minimum and as noted on the drawings.

5.4.3.4 Timber Re-treatment

All cut or drilled surfaces of H4 and H5 treated timber framing shall be flood coat re-treated, with a suitable product recommended by the original treatment plant, before installation.

5.4.3.5 Edge Notching and Centre Holes

The notching, checking, and boring of framing members shall be in strict accordance with the requirements of NZS 3604.
Avoided checking and cutting where possible and keep to such dimensions so as not to prejudice the purpose for which the member is used. Keep edge notching to a minimum and where possible use centrally bored holes instead.
Concealed services pipes and wiring shall not project beyond the framing face and where possible shall be beyond the lining's fixing reach.

5.4.3.6 Built-up Framing Members

Except for jack studs, bottom plates and top plates, framing members may be substituted with built-up members in accordance with the limitations of NZS 3604 2.4.4.7 with the prior approval of the Designer or Franchisee only.

5.4.4 Steel Fixings

5.4.4.1 Fastenings and Connectors

Unless otherwise noted or specified, timber framing fastenings and connectors shall be as specified in the relevant fixing schedules of NZS 3604 or have an equivalent capacity as specified therein. Timber framing connectors and fixings shall comply with the product information as required in NZS 3604 2.4.6, and shall be used and installed in accordance with the manufacturer's recommendations. Pre-drill nail holes in split-prone framing as necessary.

5.4.4.2 Durability of Fixings & Fastenings

Unless otherwise noted or specified, the minimum durability of timber framing fixings and fastenings, excluding nails and screws, shall comply with the durability requirements of NZS 3604 Table 4.1.
Galvanised steel fixing components, excluding nails and screws, shall have galvanised coating masses in accordance with NZS 3604 Table 4.2.
Unless noted or specified otherwise, the materials for nails and screws shall be as given in NZS 3604 Table 4.3.
Steel fixings and fastenings in contact with timber treated with copper based timber preservatives (H3.2 or higher) shall be in accordance with NZS 3604 4.4.4.
Stainless steel nails shall be minimum Grade 304 unless otherwise specified or noted.

5.4.5 Wall Framing

5.4.5.1 Plates

Top and bottom plates shall be to the dimensions and layout shown on the drawings. Unless specified or shown otherwise, top and bottom plates shall be fixed in accordance with NZS 3604 7.5.12 and Tables 8.18 and 8.19, true to line and level or angle.
Joints in top plates shall be made over a stud or over blocking between studs, and all top plate connections shall be in accordance with NZS 3604 8.7.3. Form all holes and edge notches in top and bottom plates in accordance with NZS 3604 8.7.5.

5.4.5.2 Studs

Studs shall be to the dimensions and spacings shown on the drawings, and installed true to line and plumb in both directions between top and bottom plates.
Unless noted otherwise, non-load bearing wall studs shall be to the spacings given in NZS 3604 Table 8.4, stud width as shown on the drawings.
Form all holes and edge notches in studs in accordance with NZS 3604 8.5.1.5. Do not notch, check, cut, or bore holes in the middle third of any trimming stud.
Should the need arise, studs shall be straightened in accordance with NZS 3604 8.5.3 with prior approval from the Architect/Designer only.

Unless noted otherwise, studs in loadbearing walls for 3 kPa floor loads shall be in accordance with NZS 3604 Table 14.10.

5.4.5.3 Lintels

Lintels shall be to the dimensions and locations shown on the drawings, and installed true to line and level, and shall be supported by a 45mm thick doubling stud or jack stud fixed to a trimming stud, and secured against uplift in accordance with NZS 3604 8.6.1.8 as required or as specified in the working drawings.
The thickness of a lintel may be made from two or more members, where each member is the length of the lintel, in accordance with NZS 3604 2.4.4.7.

5.4.5.4 Sill & Head Trimmers

Unless specified or shown otherwise, sill and head trimmers to openings shall be the same width as the wall stud and to the thickness given in NZS 3604 Table 8.15, and installed at the required opening height true to line and level, and supported by a 45mm thick doubling stud or jack stud fixed to a trimming stud.

5.4.5.5 Dwangs

Dwangs shall be the same width and thickness as the wall stud, and installed at the centres noted on the drawings, and accurately cut and fixed in place true to line and level and flush with stud edges.
Dwangs fixed in accordance with NZS 3604 Table 8.19.

5.4.6 Roof Framing

5.4.6.1 Verandah Beams

Verandah beams shall be to the dimensions and locations shown on the drawing and installed true to line and level. Unless shown otherwise, all verandah beam jointing and connections to timber posts shall be in accordance with NZS 3604 Table 9.2 and the approved building consent documents.

5.4.6.2 Valley Boards

Valley boards shall be sized to the dimensions and installed to the supporting framing as detailed on the drawings.

5.4.6.3 Tile Battens

Tile battens shall be to the dimensions and spacings shown on the drawings and to suit the roofing tiles, and fixed to rafters and/or trusses in accordance with NZS 3604 Table 10.12. Tile battens shall be continuous over a minimum of two spans.

5.4.6.4 Roof Trusses

Roof trusses shall be Specific Engineering Design (SED) in accordance with NZBC B1/VM1 and manufactured by an accredited fabricator, and shall comply with all aspects of NZS 3604 10.2.2. Roof trusses shall be fabricated to meet the specific design requirements of the roof including, but not limited to; roof layout, pitch, and details, in accordance with the drawings and specification.
Roof trusses shall be supported and fixed to the truss fabricator's specifications but shall be no less than that required by NZS 3604 Tables 10.14 and 10.15. Roof trusses shall be braced as shown on the drawings and in accordance with NZS 3604 10.3.

5.4.6.5 Roof Bracing

Roof bracing shall be as shown on the drawings and in accordance with NZS 3604 10.3 and 10.4 as necessary.

5.5 GIB® Rondo® Metal Batten Systems

5.5.1 Scope

Supply and install the specified GIB® Rondo® Metal Batten Systems to the locations identified on the drawings, incorporating all system components and accessories required for proper installation and performance. All aspects of this work shall be in complete accordance with the GIB® Rondo® Metal Batten Systems - System and Installation Manual publication and the current GIB® Site Guide (check www.gib.co.nz, or call 0800 100 442 for the latest editions), other relevant product manufacturers' recommendations, and as shown on the drawings.

No substitutions are permitted for GIB® Rondo® Metal Batten Systems.

This specification section should be read in conjunction with the GIB® Plasterboard Linings specification and relevant GIB® Systems specifications, and other specification sections, as they are interrelated.

For the purpose of this specification, the GIB® Rondo® Metal Batten Systems - System and Installation Manual publication is referred to as the 'GIB® Rondo® Metal Batten Systems Manual'.

5.5.2 GIB® Rondo® Metal Batten Systems

5.5.2.1 GIB® Rondo® NZ31 Ceiling Batten System

GIB® Rondo® NZ31 Ceiling Batten System. Incorporating 16mm deep, concealed metal ceiling battens that are fixed directly to the support frame.

Installed with all system components and accessories required for proper installation and performance, in accordance with the GIB® Rondo® Metal Batten Systems Manual, to the locations, layout, levels and details shown on the drawings.

Suitable for 10mm, 13mm, 16mm and 19mm thick GIB® plasterboard ceiling linings for residential and commercial applications. Plasterboard ceiling linings are generally screw-fixed directly to the underside of the ceiling battens.

GIB® Rondo® System Components:
- NZ31 Batten: 16mm deep, galvanised steel furring channel (batten).
- 142 Perimeter Channel: 16mm deep, galvanised steel perimeter 'U' channel.
- NZ18 Perimeter Angle: 32 x 32mm, galvanised steel perimeter angle.
- 226 Clip: 90mm long, galvanised steel batten fastening clip. Provides 30mm max. clearance from supporting joist or truss.
- 394 Long Clip: 190mm long, galvanised steel batten fastening clip. Provides 130mm max. clearance from supporting joist or truss.
- STWC Acoustic Clip (ST001): Galvanised steel, resilient mount, acoustic batten fastening clip.
- 138 Jointer: Galvanised steel batten jointing clip.

Where electrical earthing of GIB® Rondo® NZ31 Ceiling Batten System is required the electrical earthing shall be carried out by a qualified electrician in accordance with the electrical standards and regulations.

5.5.3 Co-operation

Co-operate with other trades to ensure that all preliminary and preparatory works are completed to specification and as shown on the drawings.

Coordinate with other trades to ensure that the GIB® Rondo® Metal Batten System correctly allows for ceiling lining installation, and for the locations of recessed lights and other fittings installed by others, and to install GIB® Rondo® Metal Batten Systems as required.

5.5.4 Workmanship

Where required by the NZ Building Act 2004, it is the building contractor's responsibility to ensure that all restricted building work is carried out by a Licensed Building Practitioner.

Installation of GIB® Rondo® Metal Batten Systems shall be carried out by experienced and competent tradespersons, who are familiar with the specified systems and installation techniques, in accordance with the GIB® Rondo® Metal Batten Systems - System and Installation Manual, to fully comply with all warranty requirements, and relevant requirements of AS/NZS 2785 (suspended systems). Submit evidence of experience on request, e.g. National Certificate of Interior Systems, or Certified Business Member of AWCINZ.

All cutting, jointing, fixing and supporting techniques shall be exactly as recommended by the manufacturer. All work shall be such as to leave a neat, efficient and robust installation, to the required standard, free from damage and defects.

5.5.5 Delivery & Handling

Store all materials and accessories indoors, off the floor, on a flat, level surface in accordance with the manufacturer's requirements. Keep materials and accessories dry and protected from damage, distortion, moisture and contamination at all times.

Do not use damaged or defective materials and products.

Handle all materials in accordance with the manufacturer's requirements and Product Data Sheets, and in a manner that prevents damage and distortion to the component.

Installers shall be familiar with and comply with the manufacturer's Material Safety Data Sheet precautions for use, and use appropriate safety gear when handling materials.

Installers shall conform with all relevant WorkSafe NZ Guidelines and Codes of Practice - including the OSH Guidelines For the Provision of Facilities and General Safety in the Construction Industry.

5.5.6 Completion

Carry out a final inspection immediately after installation. Check that the GIB Rondo Metal Batten System has been installed correctly in accordance with the GIB® Rondo® Metal Batten Systems Manual and installation tolerances, to the correct set-out and details shown on the drawings, and that the installations are accurately aligned true to line, level (and/or plumb) and plane.

Check that the installed layout allows for the correct positioning and installation of all penetrations and services fixtures and fittings as indicated on the drawings.

Check for any damage and defective work - repair or replace as necessary to the required standard.

Leave all of this work complete and to the required standard in accordance with the manufacturer's warranty requirements, as shown on the drawings.

Leave completed works and surrounding surfaces clean and free of rubbish and debris. Remove all rubbish and excess material from the site.

Issue to the Owner a copy of the a copy of the GIB® Product and System Warranty.

5.6 GIB® Plasterboard Linings

5.6.1 Scope

Supply and install GIB® Plasterboard Linings specified herein, as sheet lining materials to the walls, ceilings and other elements identified on the drawings, complete with all accessories required for proper installation, finishing and performance. All aspects of this work shall be in complete accordance with the current GIB® Site Guide and relevant GIB® Systems literature (check www.gib.co.nz, or call 0800 100 442 for the latest editions), and other relevant product manufacturers' recommendations.

No substitutions are permitted for GIB® Plasterboard Linings, GIB® Systems or GIB® System components and accessories.

This specification must be read in conjunction with relevant GIB® Systems specifications - GIB® EzyBrace® Systems, GIB® Aqualine® Wet Area Systems, and GIB® Rondo® Metal Batten Systems - and other specifications sections, as they are interrelated.

5.6.2 Requirements

5.6.2.1 Warranty

GIB® Product & System Warranty:

GIB Systems Durability.
The following systems have, unless stated otherwise in GIB® technical literature, a serviceability life in excess of that stated and satisfy the requirements of NZBC Clause B2 Durability:

15 Years:
- GIB Aqualine® Wet Area Systems.

50 Years:
- GIB EzyBrace® Systems

Provide the GIB® Product & System Warranty on the manufacturer's standard warranty form.
Commence the warranty from the date of practical completion of the contract works.

Include with the warranty: a copy of the completed GIB® Installation Sign-Off sheet, and the GIB® Plasterboard Lining Systems Care and Maintenance bulletin.

5.6.2.2 Quality Assurance

Ensure that the installation and finishing of GIB® Plasterboard Linings and associated GIB® Systems comply in all respects with the approved design drawings and specifications, and Building Consent.

Maintain and comply with industry-recognised quality control and assurance procedures to ensure that all stages of work are carried out to the highest standard.

5.6.2.3 Defective Materials & Work

Should defective materials and/or work be found at any time before the final acceptance of the work, it shall be rejected. Rejected GIB® Plasterboard Linings and GIB® Systems materials and work shall be repaired and/or replaced to the satisfaction of the Architect/Designer, without delay and at no additional cost to the Principal.

5.6.2.4 Substitution of GIB® Plasterboard Linings

GIB® plasterboard linings shall be as specified herein and as indicated on the approved drawings. The substitution of GIB® branded plasterboard linings and GIB® System components for alternative brands is not permitted under any circumstances.

The substitution of a specified GIB® plasterboard lining for an alternative GIB® plasterboard lining by the Contractor shall be in strict accordance with the requirements of the GIB® Site Guide: 2.3 - Board Substitution Options, and relevant GIB® Systems literature. Such substitutions shall only be permitted with the Architect's/Designer's written authorisation, and shall be at no additional cost to the

Principal. Should any resultant extra work and/or redesign work be required to accommodate alternative GIB® Plasterboard Linings to satisfy design, performance and compliance requirements, then the cost of these shall be borne by the Contractor.

5.6.3 Performance

5.6.3.1 Bracing Performance - Timber Framing

Bracing Performance - GIB EzyBrace® Systems - Timber Framing. To the timber framed elements noted as 'Bracing' on the drawings, additionally comply with all relevant aspects of the GIB EzyBrace® Systems (2016) publication and GIB Ezybrace® Bracing Software according to the specified bracing unit rating, BRANZ Appraisal No.928 (2016), and other relevant product manufacturers' recommendations. Refer to separate specification GIB EzyBrace® Systems.

5.6.3.2 Wet Areas

Wet Area Plasterboard Linings - GIB Aqualine® Wet Area Systems. To the areas noted as 'Wet Area' on the drawings, additionally comply with all relevant aspects of the GIB Aqualine® Wet Area Systems (2007) publication, BRANZ Appraisal No.427 (2007), and other relevant product manufacturers' recommendations. Refer to separate specification GIB Aqualine® Wet Area Systems.

5.6.4 GIB® Plasterboard Linings

5.6.4.1 GIB® Standard Plasterboard, 10mm

GIB® Standard Plasterboard, 10mm. A 10mm thick standard plasterboard interior lining. Suitable for use in residential and commercial applications on walls. Manufactured to exceed the requirements of AS/NZS 2588. Refer to the GIB® Site Guide.

Installed Location: General Walls (Excluding specific braced elements or 'wet areas')

5.6.4.2 GIB® Standard Plasterboard, 13mm

GIB® Standard Plasterboard, 13mm. A 13mm thick standard plasterboard interior lining. Suitable for use in residential and commercial applications on walls and ceilings. Manufactured to exceed the requirements of AS/NZS 2588. Refer to the GIB® Site Guide.

Installed Location: General Ceilings (Other than 'wet areas')

5.6.4.3 GIB Braceline® & GIB Noiseline®, 10mm

GIB Braceline® & GIB Noiseline®, 10mm. A 10mm thick dual purpose plasterboard interior lining, with a high-density core for extra bracing and noise control performance. Suitable for use in residential and commercial applications on walls and ceilings where increased bracing and noise control performance is required. Manufactured to exceed the requirements of AS/NZS 2588. Refer to the GIB® Site Guide.

Installed Location: Refer to Bracing Plan for locations or Braceline

5.6.4.4 GIB Aqualine®, 10mm

GIB Aqualine®, 10mm. A 10mm thick moisture resistant plasterboard interior lining, with a water resistant polymer impregnated core to help prevent moisture penetration. Suitable for use in

residential and commercial applications on walls and ceilings in spaces at risk from water or moisture damage. Manufactured to exceed the requirements of AS/NZS 2588. Refer to the GIB® Site Guide.

Installed Location: Walls Generally in 'Wet Areas'

5.6.4.5 GIB Aqualine®, 13mm

GIB Aqualine®, 13mm. A 13mm thick moisture resistant plasterboard interior lining, with a water resistant polymer impregnated core to help prevent moisture penetration. Suitable for use in residential and commercial applications on walls and ceilings in spaces at risk from water or moisture damage. Manufactured to exceed the requirements of AS/NZS 2588. Refer to the GIB® Site Guide.

Installed Location: Bathroom Ceilings

5.6.5 Co-operation

Co-operate with other trades to ensure that all preliminary and preparatory works are completed to specification and as shown on the drawings.
Co-operate with the Decorator to ensure that the specified Finish Levels for plasterboard jointing and finishing is achieved before decorating commences.

Coordinate with other trades to install GIB® Plasterboard Linings as required, and to ensure that:
- appropriate tolerances and clearances allow for adjacent internal linings, fixtures, fittings, services, etc; and
- the linings correctly allow for proper door and window installation; and
- penetrations for building services are correctly handled to maintain sheet integrity and system performance.

5.6.6 Workmanship

Where required by the NZ Building Act 2004, it is the building contractor's responsibility to ensure that all restricted building work is carried out by a Licensed Building Practitioner.

Installation and finishing work of GIB® Plasterboard Linings shall be carried out by qualified and experienced tradespersons, familiar with the specified materials and installation and finishing techniques, in accordance with the GIB® Site Guide and the relevant GIB® product technical literature, and to fully comply with all warranty requirements. Submit evidence of experience on request, e.g. National Certificate of Interior Systems, or Certified Business Member of AWCINZ.

GIB® Plasterboard Linings shall be jointed and finished to the specified Finish Levels in accordance with AS/NZS 2589 and GIB® Site Guide. Make all necessary arrangements for the quality assessment of plasterboard jointing and finishing Finish Levels prior to commencing decorating.

All cutting, fixing, jointing, finishing and sealing techniques shall be exactly as recommended by the manufacturer. All work shall be such as to leave a neat, efficient and robust installation, to the required standard and free from damage and defects.

Protect surrounding surfaces and areas from jointing compound splashes and sanding dust.

5.6.7 Delivery & Handling

Store GIB® Plasterboard Linings indoors, in neat, flat stacks off the floor, in dry conditions and without any sagging or distortion, in accordance with the GIB® Site Guide. Keep plasterboard linings, compounds and accessories dry, out of direct sunlight, and protected from damage, moisture and contamination at all times.

Do not use damaged or defective materials and products, or products that are beyond the designated shelf life.

Should a problem be encountered with any GIB® product during installation or delivery, immediately contact the GIB® Helpline on 0800 100 442. Do not continue to use the product that is not performing to specification or expectation. Keep samples of the product in question and where possible, document batch numbers and/or manufacturing dates.

Handle all products and materials in accordance with the manufacturer's requirements and relevant Product Data Sheets and GIB® Site Guide, and in a manner that prevents damage. Carry plasterboard sheets on edge, and avoid damage to sheet edges, ends, and surfaces.

Installers shall be familiar with and comply with the requirements of the GIB® Site Guide precautions for use, and use appropriate safety gear when handling materials.

Installers shall conform with all relevant WorkSafe NZ Guidelines and Codes of Practice - including the OSH Guidelines For the Provision of Facilities and General Safety in the Construction Industry.

5.6.8 Installation

5.6.8.1 Standard Ceiling Fixing - Metal Ceiling Battens

GIB® Plasterboard Ceiling Linings - Standard Ceiling Fixing with Metal Ceiling Battens. Metal ceiling battens shall be from the GIB® Rondo® Metal Batten Systems - refer to separate specification GIB® Rondo® Metal Batten Systems.

Unless independently supported, uniformly distributed loads (fixtures and fittings and/or overlaid insulation) supported by GIB® plasterboard ceiling linings shall not exceed 3.0 kg/m².

Metal ceiling batten spacings shall be shall be as given in the GIB® Site Guide according to the specified plasterboard thickness - 450mm for 10mm thickness. Ceiling battens shall all run in the same direction within the ceiling area. In no case shall ceiling battens be continuous over movement control joints in the structure.

Install GIB® Plasterboard sheets right angles to ceiling battens, with sheet end-joints staggered minimum 600mm and located off battens and back-blocked. Fully support sheets during positioning and fixing - for ceiling installations, the use of a mechanical lifting machine is recommended.

Plasterboard sheets shall be fixed to ceiling battens in conjunction with GIBFix® adhesive applied at maximum at 200mm centres. Do not apply adhesive at sheet edges or within 200mm of fasteners. Firmly press the plasterboard where adhesive has been applied to ensure full contact.

Fix sheets to timber ceiling battens with GIB® Grabber® Self Tapping Screws in accordance with GIB® Site Guide fastener schedule according to the plasterboard thickness. Position fasteners no closer than 12mm from a tapered edge or 18mm from a cut sheet edge.

Install all necessary paper-faced metal beads, casing beads, shadow and reveal beads and other edge trims to plasterboard corners and edges as necessary and as detailed on the drawings.

Form movement control joints to the locations and details shown on the approved drawings. Where not indicated on the drawings, movement joints shall be positioned at maximum 12m intervals in both directions on any single ceiling, and where there is a change in ceiling lining material, and shall coincide with the junctions between adjoining spaces.

Accommodate recessed light fittings, heating and ventilating diffusers and grilles and other utility fixtures and fittings that penetrate the ceiling lining.

5.6.8.2 Jointing & Finishing

Joint and finish GIB® Plasterboard Linings with GIB® joint and finishing compounds appropriate for the plasterboard type and durability, and the finish level required. Refer to Joint & Finishing Compounds clause.

Carry out jointing and finishing according to the specified Finish Level in accordance with the GIB® Site Guide and GIB® Compounds brochure. Reinforce sheet joints and internal corners with joint tape or paper-faced trim embedded into the Taping (first) Coat.

Sheet joints, internal and external corners, and fastener heads shall be evenly finished with GIB® compounds. When dry, lightly sand to a smooth finish with 220 grit sandpaper or drywall sanding screen to remove tool marks, ridges and other imperfections prior to subsequent sealing and decorating.

5.6.9 Completion

Check that GIB® Plasterboard Linings have been installed in accordance with the GIB® Site Guide and GIB® Systems literature, and are finished to the specified finish levels.

Check for any damage and defective work - repair or replace as necessary to the required standard.

Ensure that inspection and assessment of the plasterboard Finish Level has been carried out, and that written agreement stating the completed jointing and finishing is acceptable for subsequent surface sealing and decoration has been provided.

Ensure that the GIB® Installation Sign-Off Certificate has been completed and signed by the Interior Plasterer/Stopper.

Leave all of this work complete and to the required standard in accordance with the manufacturer's warranty requirements, as shown on the drawings and the conditions of the Building Consent.

Clean up thoroughly and leave the finished work and surrounding surfaces clean and free of contamination from compound splashes and dust. Remove all associated rubbish and excess material from the site.

Issue to the Owner a copy of the GIB® Plasterboard Lining Systems Care and Maintenance bulletin, and a copy of the GIB® Product and System Warranty.

Preparation and painting (by others) of GIB® Plasterboard Linings shall be carried out in accordance with AS/NZS 2311 and with the paint manufacturer's recommendations.

Preparation, including application of under-tile waterproofing membranes, and tiling (by others) of GIB® Plasterboard Linings shall be carried out in accordance with AS 3589.1 and the BRANZ Good Practice Guide: Tiling.

5.7 GIB Aqualine® Wet Area Systems

5.7.1 Scope

Supply and install the specified GIB Aqualine® Wet Area Systems to the locations identified on the drawings, incorporating GIB® plasterboards and all system components and accessories required for proper installation and performance. All aspects of this work shall be in complete accordance with the GIB Aqualine® Wet Area Systems (2007) publication and the current GIB® Site Guide (check www.gib.co.nz, or call 0800 100 442 for the latest editions), BRANZ Appraisal No.427 (2007), other relevant product manufacturers' recommendations, and as shown on the drawings.

No substitutions are permitted for GIB Aqualine® Wet Area Systems, GIB® Plasterboard Linings, or GIB® System components and accessories.

This specification section must be read in conjunction with the GIB® Plasterboard Linings specification and relevant GIB® Systems specifications, and other specification sections, as they are interrelated.

For the purpose of this specification, the GIB Aqualine® Wet Area Systems (2007) publication is referred to as the GIB® Wet Area Systems Manual.

5.7.2 GIB Aqualine® Non-Tiled Wall Systems

5.7.2.1 Non-Tiled Walls - Timber Frame

GIB Aqualine® Wet Area Systems - Non-Tiled Walls - Timber Framing. A timber frame, wet area lining system for non-tiled walls incorporating one layer of 10mm or 13mm GIB Aqualine® on the wet area side. Refer to the GIB® Aqualine® Systems literature.

5.7.3 GIB Aqualine® Tiled Wall Systems

5.7.3.1 Tiled Walls (tile weight - max. 20kg/m²) - Timber Frame

GIB Aqualine® Wet Area Systems - Tiled Walls - Timber Frame. A timber frame, wet area lining system for tiled walls with a maximum tile weight of 20kg/m², incorporating one layer of 10mm or 13mm GIB Aqualine® on the wet area side. Refer to the GIB® Wet Area Systems literature.

5.7.3.2 Tiled Walls (tile weight - 20-32kg/m²) - Timber Frame

GIB Aqualine® Wet Area Systems - Tiled Walls - Timber Frame. A timber frame, wet area lining system for tiled walls with a tile weight between 20-32kg/m², incorporating one layer of 13mm GIB Aqualine® on the wet area side. Refer to the GIB® Wet Area Systems literature.

5.7.4 GIB Aqualine® Ceiling Systems

5.7.4.1 Metal Ceiling Battens

GIB Aqualine® Wet Area Systems - Ceilings - Metal Ceiling Battens. A wet area drywall ceiling lining system over metal ceiling battens incorporating one layer of 13mm GIB Aqualine®. Refer to the GIB® Wet Area Systems literature.

5.7.5 Co-operation

Co-operate with other trades to ensure that all preliminary and preparatory works are completed to specification and as shown on the drawings.
Co-operate with the Decorator to ensure that the specified Finish Levels for plasterboard jointing and finishing is achieved before decorating commences.

Coordinate with other trades to install GIB Aqualine® Wet Area Systems to the required set-out and standard, and to ensure:
- appropriate tolerances and clearances allow for adjacent internal linings, fixtures, fittings, services, etc; and
- GIB® plasterboard linings correctly allow for proper door and window installation; and
- penetrations for building services are correctly handled to maintain sheet integrity and system performance.

5.7.6 Workmanship

Where required by the NZ Building Act 2004, it is the building contractor's responsibility to ensure that all restricted building work is carried out by a Licensed Building Practitioner.

Installation of GIB Aqualine® Wet Area Systems shall be carried out by experienced and competent tradespersons, who are familiar with the specified materials and installation techniques, in accordance with the manufacturer's installation requirements, and to fully comply with all warranty requirements. Submit evidence of experience on request, e.g. National Certificate of Interior Systems, or Certified Business Member of AWCINZ.

Carry out all necessary installation inspections in accordance with the GIB® Wet Area Systems Manual and the GIB® Site Guide, and to fully comply with the manufacturer's warranty requirements as the works progress.

All cutting, jointing, fixing and sealing techniques shall be exactly as recommended by the manufacturer. All work shall be such as to leave a neat, efficient and robust installation, to the required standard, free from damage and defects.

Make all necessary provisions to protect adjacent work and surfaces from damage during installation.

5.7.7 Delivery & Handling

Store all GIB Aqualine® Wet Area Systems plasterboard linings and system components indoors, off the floor, on a flat, level surface in accordance with the manufacturer's requirements. Keep stored plasterboard linings and system accessories dry, out of direct sunlight, and protected from damage, moisture and contamination at all times.

Do not use damaged or defective materials and products, or products that are beyond the designated shelf life. Cracked or damaged GIB Aqualine® sheets must never be used.

Should a problem be encountered with any GIB® product during installation or delivery, immediately contact the GIB® Helpline on 0800 100 442. Do not continue to use the product that is not performing to specification or expectation. Keep samples of the product in question and where possible, document batch numbers and/or manufacturing dates.

Handle all materials in accordance with the manufacturer's requirements and relevant Product Data Sheets, and in a manner that prevents damage.

Installers shall be familiar with and comply with the manufacturer's Material Safety Data Sheet precautions for use, and use appropriate safety gear when handling materials. Carry plasterboard sheets on edge, and avoid damage to sheet edges, ends, and surfaces.

Installers shall conform with all relevant WorkSafe NZ Guidelines and Codes of Practice - including the OSH Guidelines For the Provision of Facilities and General Safety in the Construction Industry.

6 ALUMINIUM JOINERY

6.1 Preliminary

Refer to General Conditions of Contract and the Special Conditions in this Specification as appropriate. Read this section in conjunction with all other trade sections.

6.2 Compliance

Comply with the New Zealand Building Code 1992 including all revisions and amendments, Verification Methods where appropriate, and construction principles that are embodied in the Acceptable Solutions.

Comply with all relevant provisions and recommendations of:

1170.2:2011(AS/NZS)	Structural design actions - Wind actions
1170.3:2003(AS/NZS)	Structural design actions - Snow and ice actions
1170.5:2004(NZS)	Structural design actions - Earthquake actions - New Zealand
2208:1996(AS/NZS)	Safety glazing materials in buildings
3504:1979(NZS)	Specification for aluminium windows
3602:2003(NZS)	Timber and wood-based products for use in building
4211:2008(NZS)	Specification for performance of windows
4218:2009(NZS)	Thermal insulation - Housing and small buildings
4223.1:2008(NZS)	Code of practice for glazing in buildings - Glass selection and glazing
4223.2:2016(NZS)	Glazing in buildings - Part 2: Insulating glass units
4223.3:2016(NZS)	Glazing in buildings - Part 3: Human impact safety requirements
4223.4:2008(NZS)	Glazing in buildings - Part 4: Wind, dead, snow, and live actions
4284:2008(AS/NZS)	Testing of building facades
4667:2000(AS/NZS)	Quality requirements for cut-to-size and processed glass
4668:2000 (AS/NZS)	Glossary of terms used in the glass and glazing industry
AS/NZS 4666:2012	Insulating glass units
NZBC B2	Durability
NZBC E2	External moisture
NZBC F2	Hazardous Building Materials
NZBC F4/AS1	Safety from falling
NZBC H1	Energy Efficiency
WANZ	SFA 3503-03:2005 Anodising Standard
WANZ (PQAS)	Powder Coating Quality Assurance System (PQAS)

6.3 Aluminium Windows & Doors from APL Window Solutions

6.3.1 Scope

Supply and install the specified Aluminium Windows and Doors manufactured by First™ Windows & Doors to the locations and details shown on the drawings; complete with all components (flashings, support mechanisms, brackets, etc) where required, for proper installation and operation; and commissioned to the required performance and functionality. All aspects of this work shall be in strict accordance with the manufacturer's technical literature and installation requirements (check www.firstwindows.co.nz, call 07 849 888, or email techinfo@aplnz.co.nz for the latest editions), other relevant product manufacturers' recommendations, and as shown on the drawings.

No substitutions are permitted for the specified Aluminium Windows and Doors from First™ Windows & Doors.

For the purpose of this specification, First™ Windows & Doors shall be referred to henceforth as APL - Window Solutions or APL.

6.3.2 Performance Criteria

6.3.2.1 Thermal Performance - Climate Zone 1

Thermal Performance. The specified APL Aluminium Window and Door Systems joinery installation is located within the boundaries of Climate Zone 1 as defined by NZS 4218. Unless specified otherwise below, the combination of glazing and specified window/door frame shall have a minimum required R-Value of R-0.26 in accordance with NZS 4218 for this Climate Zone.

Required R-Value: R0.15

6.3.3 APL Alumnium Joinery Range

6.3.3.1 Residential Series

'Residential Series' Windows and Doors, fully glazed, finished, and complete with hardware and other specified components - all as specified in the following clauses. Manufactured and installed in accordance with the manufacturer's requirements to the locations, configurations and details shown on the drawings and schedules.

6.3.4 Glazing

6.3.4.1 Standard Double Glazing

Standard Double Glazing. Air-filled and sealed insulating glass units (IGUs); with clear float glass in accordance with NZS 4223.1 and NZS 4223.3. Double glazed IGUs shall be manufactured and installed in accordance with AS/NZS 4666. Factory-fitted to awning and/or casement windows, sliding and/or bi-fold windows, hinged and/or sliding doors as identified on the drawings and schedules.

6.3.5 Co-operation

Co-operate with other trades to ensure that all preliminary and preparatory works are completed to specification and as shown on the drawings.

Coordinate with other trades to establish exact sizes for all aluminium window and door frames; and to ensure that each element correctly allows for the installation and finishing of exterior claddings and interior linings and any specific detailing shown on the drawings; and generally to install all APL aluminium windows, doors and accessories as required.

6.3.6 Workmanship

Where required by the NZ Building Act 2004 it is the building contractor's responsibility to ensure that all restricted building work is carried out by a Licensed Building Practitioner.

Aluminium window and door joinery fabrication, assembly and installation work shall be carried out by experienced and competent tradespersons, authorised to manufacture and install APL - Window Solutions aluminium windows and doors, under controlled supervision and procedures, to fully comply with all warranty requirements and in accordance with the manufacturer's requirements.

Maintain and comply with industry-recognised quality control and assurance procedures to ensure that all stages of work are carried out to the highest standard.

All fabrication and assembly processes and techniques, materials and accessories shall be exactly as recommended by the manufacturer and shall be carried out using suitable machinery, tools and equipment, in a factory workshop.

All work shall be such as to leave a neat, efficient, robust and weathertight installation.

Leave aluminium joinery and glazing clean and free from damage and defects of any kind.

6.3.7 Delivery & Handling

Aluminium joinery frames shall be braced and restrained as necessary for transportation and delivery to site. All surfaces, including glass, shall be appropriately protected from marking and damage during manufacture, delivery and installation.

Inspect all aluminium joinery units upon delivery and reject any damaged or defective items. Contact the manufacturer for replacement of rejected items at time of delivery to site. Do not use or install damaged or defective materials, products and joinery elements.

Store aluminium windows, doors and accessories undercover, off the floor, on a flat, even and level surface as recommended by the manufacturer and in a manner that prevents any frame distortion and surface damage and deterioration. Keep stored aluminium joinery dry and protected from damage, moisture and contamination at all times.

Handle aluminium joinery units and accessories in accordance with the manufacturer's requirements and in a manner that prevents distortion to joinery frames and any damage to the elements - including surface marking. Retain manufacturer's protective coverings for as long as possible, and remove them upon completion.

Installers shall be familiar with and comply with the manufacturer's safe handling requirements and precautions for use, and shall use appropriate safety gear and equipment during all stages of manufacture and installation.

Installers shall conform with all relevant WorkSafe NZ Guidelines and Codes of Practice - including the Best practice guidelines for working at height in NZ, and the OSH Guidelines For the Provision of Facilities and General Safety in the Construction Industry.

6.3.8 Completion

Check that APL aluminium window and door joinery and accessories have been installed, glazed and finished correctly and fully tested for weathertightness.
Check that all opening window sashes, doors, sliding carriage assemblies and all moving components have been commissioned to the required operating performance and functionality.
Check that all hardware, locks, latches and handles are firmly fixed in place without restricting the operation of their moving parts, and that latches and locks fully engage with strikes and keepers and are free of slack when engaged.

Check all aluminium joinery elements for damage, defects, faults and weathertightness - carry out repairs and/or replace elements as necessary in accordance with the manufacturer's instructions to the required standard.

Remove applied safety indicators and protective coverings, and clean all joinery surfaces inside and out and leave perfectly clean.

Leave this work complete, weathertight and leak-free, and in full working order to the required operating performance and functionality in accordance with the manufacturer's warranty requirements. Leave all locking keys with the Contractor.

Leave the surrounding work area clean and free of rubbish. Remove rubbish and waste material from the site.

Issue to the Owner a copy of the manufacturer's maintenance requirements and a copy of the APL Product and Installation Warranty for the installed aluminium windows and doors.

7 INSULATION

7.1 Preliminary

Refer to General Conditions of Contract and the Special Conditions in this Specification as appropriate. Read this section in conjunction with all other trade sections.

7.2 Compliance

Comply with the New Zealand Building Code 1992 including all revisions and amendments, Verification Methods where appropriate, and construction principles that are embodied in the Acceptable Solutions.

Comply with all relevant provisions and recommendations of:

3604:2011(NZS)	Timber-framed buildings
4220:1982(NZS)	Code of practice for energy conservation in non-residential buildings
4243.1:2007(NZS)	Energy efficiency - Large buildings - Building thermal envelope
4246:2016(NZS)	Energy efficiency - Installing bulk thermal insulation in residential buildings
4859.1:2018(AS|NZS)	Thermal insulation materials for buildings - Part 1: General criteria and technical provisions

7.3 Thermal Insulation

7.3.1 Scope

Supply and install the selected products as thermal insulation to the specified R-values, complete with all accessories, to the floors, walls, ceilings, roofs, and other thermally insulated building elements, as noted and shown on the drawings. All aspects of this work shall be in accordance with the product manufacturer's technical literature and installation requirements, other relevant product manufacturers' recommendations, and as shown on the drawings.

7.3.2 Co-operation

Co-operate with other trades to ensure that all preliminary and preparatory works are completed to specification and as shown on the drawings.
Co-ordinate with other trades to install all thermal insulation as required.

7.3.3 Workmanship

All installation work shall be carried out by experienced and competent tradesmen, familiar with the specified products and installation techniques, in accordance with the manufacturer's installation requirements, and as noted and detailed on the drawings.
Store and handle products in accordance with the manufacturer's recommendations, keep dry and protect from damage. Do not compress fibre insulation bales. Do not use damaged or defective insulation products and accessories.
The building must be completely enclosed and water tight before installation commences with the exception of roof insulation when installed with roofing. Ensure the moisture content of timber

framing is no greater than 18% prior to installing insulation to timber framed elements. Always maintain the full insulation thickness to ensure the required thermal values are achieved. Do not install insulation pads or blankets into closed cavities that are less than the stated insulation nominal thickness.

7.3.4 Product

7.3.4.1 Glass Fibre Pads

Glass fibre thermal insulating pads.

Manufacturer, brand name & type: Pink® Batts®

Thickness & R-Value: R2.2 Walls & R3.2 Ceiling

7.3.5 Installation

7.3.5.1 Wall Insulation - Glass Fibre Pads

Install glass fibre insulation pads, complete with accessories, friction fitted between wall studs and dwangs etc. and held in place in accordance with the manufacturer's installation recommendations. Completely fill the framing voids, leave no gaps at the edges or at penetrations etc, and maintain full insulation pad thickness. Support external wall insulation with vertical strapping tape at 400mm centres to the outside face, stainless steel stapled to the framing.

7.3.5.2 Ceiling Insulation, Truss/Framed Roof - Glass Fibre Pad

Install glass fibre insulation pads, complete with accessories, friction fitted between the ceiling joists, over the ceiling lining in accordance with the manufacturer's installation recommendations. Leave no gaps along the insulation pad edges and joints, and at the ceiling perimeter/wall junction. Separate ceiling insulation 200mm from recessed light fittings and other recessed electrical fittings; refer to the drawings for containment requirements around recessed electrical fittings.

7.3.6 Completion

Check that all insulation has been installed correctly and is correctly supported and that all edges, joins and ends are fully closed without gaps. Check for damage and faults and repair or replace as necessary. Collect and remove from site all rubbish and waste material.
Issue to the Owner a copy of any product maintenance requirements and a copy of the Thermal Insulation Product and Installation Warranties for the completed works.

8 PLUMBING

8.1 Preliminary

Refer to General Conditions of Contract and the Special Conditions in this Specification as appropriate. Read this section in conjunction with all other trade sections.

8.2 Compliance

Comply with the New Zealand Building Code 1992 including all revisions and amendments, Verification Methods where appropriate, and construction principles that are embodied in the Acceptable Solutions.

8.3 General

Carry out all works necessary to leave the water, waste, vent and soil systems serving the sanitary fittings and the plumbing hardware shown on the drawings or specified below in correct working order complete with all ancillary systems (safetrays, floor drains, overflows, relief valves, etc.) required, and with all normal incidentals customarily installed by this trade.

Comply with the Building Code, Territorial Authority By-laws and statutory authority Regulations as appropriate. Obtain all necessary permits and consents, serve all necessary notices, arrange for all tests and pay all fees and customary charges in connection with the required works.

8.4 Workmanship

8.4.1 Co-operation

Co-operate with all other trades. Attend upon Concretor, Drainlayer and Carpenter to set out the exact positions of pipe runs before adjacent work is put in hand, and to ensure that all pipes, sleeves, fixings, flashings etc. are correctly incorporated into the structure as construction proceeds.

8.4.2 Workmanship

All plumbing work shall be carried out by, or under the direct control of, properly qualified tradesmen, and shall be to recognised high standards.

The cutting away and checking of timbers shall be limited to such dimensions as will not prejudice the purpose for which the timber is used; observe NZS 3604 restrictions on the holing and checking of joists and beams. Chasing and checking of other materials only to approval. Install seismic restraints to storage tanks and HWCs as per drawings.

8.4.3 Pipework

Joints between pipes of different materials shall always be to the approval of the TA Plumbing Inspector.

Pipework set-out neatly with a minimum number of bends, and more or less parallel to and at right angles to structural elements - avoid diagonal piping.

9 DRAINLAYING

9.1 Preliminary

Refer to General Conditions of Contract and the Special Conditions in this Specification as appropriate. Read this section in conjunction with all other trade sections.

9.2 Compliance

Comply with the New Zealand Building Code 1992 including all revisions and amendments, Verification Methods where appropriate, and construction principles that are embodied in the Acceptable Solutions.

Comply with all relevant provisions and recommendations of:

1254:2010(AS/NZS)	PVC-U pipes and fittings for stormwater and surface water applications
1260:2017(AS|NZS)	PVC-U pipes and fittings for drain, waste and vent applications
2032:2006(AS/NZS)	Installation of PVC pipe systems
3500.0:2003(AS/NZS)	Plumbing and drainage - Glossary of terms
3500.2:2018(AS|NZS)	Plumbing and drainage Part 2: Sanitary plumbing and drainage
3500.3:2018(AS|NZS)	Plumbing and drainage Part 3: Stormwater drainage
NZBC E1	Surface Water
NZBC G13	Foul Water

9.3 General

Carry out all required works to leave the sewer and stormwater systems shown on the drawings in correct working order complete with all normal incidentals.

Comply with Local Authority By-laws and Health Department Regulations as appropriate. Obtain all necessary permits and consents, serve all necessary notices, arrange all tests and pay all fees and customary charges in connection with the works.

9.4 Foul Water Drainage

9.4.1 Scope

Supply, install, test and commission new, gravity-flow foul water drains on the site, to the locations, layout and details shown on the drawings, complete with all necessary components and accessories required for satisfactory completion and performance of the foul water drainage system. All aspects of this works shall comply with the requirements of the NZ Building Code, related compliance Standards, Regulations and Acts, and to the requirements of the Territorial Authority, and as specified herein and on the approved drawings and schedules. Ancillary work and/or services not specifically mentioned but necessary to complete the work to specified levels of performance shall be deemed included.

Install foul water drains in natural ground, beneath and external to the building, for the distances indicated on the drawings. Allow for all ventilation requirements, inspection openings, bends, branches, manholes, inspection chambers, overflow gully traps, etc., as required and indicated on the drawings. Unless shown otherwise, the foul water drains shall be connected to the building's sanitary drainage system, and discharge to the foul water network.

The foul water drainage plans are diagrammatic only. Allow for all necessary vents, inspection fittings, cleaning eyes, traps and venting in accordance with AS/NZS 3500.2 and to comply with the New Zealand Building Code, and as required by the Territorial Authority. Refer to the drawings for the dimensioned locations of sanitary waste pipes and outlets.

9.4.2 Trench Excavation

9.4.2.1 Excavation

Locate all existing buried services before commencing excavation work in any area.

Excavations for trenches and pits shall be properly executed and supported in accordance with the requirements of AS/NZS 3500.2.

Carry out excavation work to comply with all relevant health and safety regulations and guidelines, including the 'Excavation Safety - Good Practice Guidelines' where appropriate.

Unless specified otherwise, the excavation of trenches shall be taken out by open cut to the levels and grades shown or implied on the drawings. Excavate trenches to the depths which will provide for the appropriate type of bedding.

Trench excavations shall be of sufficient width to allow all operations necessary for the jointing of pipes and placing of the specified backfill. The bottom width of the trenches shall at least the combined measurement of the outside diameter of the pipe plus 200mm - with a minimum clearance of 100mm on each side of the drain barrel. The trench width at the top of the pipe shall not exceed the outside diameter of the pipe plus 600mm unless the pipe in the trench is covered with concrete. The trench above the top of the pipe may be cut wider, either by excavating a wider bench or by battering the trench wall.

9.4.3 Pipe Laying

9.4.3.1 Bedding Pipes

Provide a minimum 75mm thick underlay layer of well compacted bedding material for all pipes. A chase shall be excavated in the bedding to accommodate any jointing socket or fitting in the drain. The pipe embedment material shall be laid and compacted so that the pipe is evenly and continuously supported along its length on either side of the pipe, and with an overlay layer minimum 150mm thick.

When trench support systems are used, the bedding material shall be placed and compacted in a manner so that no loss of compaction results from removal of the trench side support systems. The trench support shall be removed in such a way as to ensure that the placing and compaction of the

bedding material occurs below the trench supports and directly against the undisturbed ground of the trench walls.

After completion of the jointing and inspection of drain pipes, place and compact the bedding surround material around the pipe to the required depth over the pipe. The material shall be carefully placed around and over the pipe using hand tamping and in a manner that ensures the pipe is uniformly supported all round its perimeter and without voids. Take care during placement and compaction to ensure the pipe is not displaced or damaged.

9.4.3.2 Laying Pipes

Install foul water drains in accordance with AS/NZS 3500.2 to the layout, levels and grades shown on the drawings Drain pipes shall be laid to provide maximum falls, in straight lines and at an even grade, without obstruction to flow, and with full allowance for bedding.

Before installing the pipes, check the bore of each pipe is free from foreign matter and that the pipe exterior and the socket have not been damaged in handling or storage. All pipelines shall be kept clean and free of dirt and debris at all times during installation, testing and commissioning.

PVC-U foul water drain pipes shall be properly jointed (rubber ring joint or solvent welded joint) to produce a watertight seal in accordance with the manufacturer's instructions.

Start laying main drains at the point of outfall and insert junctions for branch drains as the work proceeds. Pipes shall be laid with the least number of bends, in the centre of the trench, in straight lines between bends, and to the grades and locations shown on the drawings.

Install all necessary fittings, including vents, inspection openings and access points, bends and junctions, to the locations shown on the drawings and in accordance with the manufacturer's instructions. Where not specified on the drawings or schedules, fittings for inspection openings, bends, junctions, etc., shall be selected from the PVC pipe system range of products and installed in accordance with the manufacturer's instructions.

Other than precautions against damage by displacement or floating pipes, no bedding surround material or backfill shall be placed until the laying of the drain has been inspected by the Territorial Authority.

9.4.4 Connection

9.4.4.1 Public Network - Boundary Connection

Connect to discharge the foul water drainage line directly to the public mains street-edge/boundary connection in accordance with the requirements of the Territorial Authority and as shown on the drawings.

9.4.5 Testing

9.4.5.1 Foul Water Drains

Test the foul water drainage installation, including all drains, connections and system components, for water tightness in accordance with the requirements of the Territorial Authority (TA).

Where required by the Territorial Authority, the testing shall be undertaken in the presence of a representative of the TA. Demonstrate to the Contract Administrator and the Territorial Authority that the installation complies with the requirements of the contract documents, related standards and regulatory bodies. Lodge all certificates of approval with the Contract Administrator.

Unless specified otherwise by the Territorial Authority, the test method shall be the Water Test procedure for non-pressure pipelines as defined in AS/NZS 2302. Where appropriate, the procedures in NZBC E1/VM1 may be used as an alternative. The acceptability of other test methods are be subject to the approval of the Territorial Authority and the Contract Administrator.

Provide all necessary plant, equipment and instruments required for the specified testing procedure. All testing and commissioning shall be undertaken by suitably skilled and experienced technicians.

Pressure testing shall be carried out after the pipes have been laid and the bedding material has been placed over the pipes as specified.

Prior to testing ensure that all pipe junctions and inspection eyes are exposed, and pipelines have been flushed and all residual debris cleaned out.

Foul water manholes shall be tested for watertightness by plugging all pipes and filling with water. After absorption has taken place the water level shall remain constant for thirty minutes.

Test results shall be recorded clearly on properly formatted Test Result sheets, and submitted to the Contract Administrator within 48 hours of completion of testing.

Repair or replace any materials or workmanship found to be defective or faulty during testing, and repeat the test until a satisfactory test result is achieved.

Leave the installation watertight and free of defects, and operating to the required performance standard.

The work shall be deemed incomplete unless all required testing and commissioning has been carried out and has passed the requirements of the testing specification and the Territorial Authority.

9.4.5.2 Water Test Procedure - to AS/NZS 2302

Water test procedure of foul water drains (non-pressure) - to AS/NZS 2302: Section 7.3.2.

- The pipeline shall be filled with water to a height of not less than 1m above the natural ground level at the highest point of the section being tested, or to the flood level of the lowest sanitary fixture, but not exceeding 5m at the lowest point of the test section.
- The pressure shall be maintained without leakage for at least 15 minutes.
- The source of any leaks shall then be ascertained and any defects repaired.
- The pipeline shall then be retested.

Note: Testing should not be carried out if groundwater is present above the pipeline. If groundwater is present, the test pressure should be increased to compensate for the depth of groundwater at a rate of 10 kPa for every 1m of groundwater depth.

9.4.6 Backfilling

9.4.6.1 Backfilling

Trenches shall be backfilled as soon as possible after the laying, inspecting and testing of the pipeline.

Where required, lay marker tape along the length of the drain, just above the top of the pipe embedment zone, before backfilling.

Trench backfill materials shall be placed over the pipe embedment, and compacted to restore the trench as near as practicable to the normal surrounding ground surface level and reduce the likelihood of subsidence. Backfill material shall be placed in uncompacted layers not exceed 300mm, then mechanically compacted to the required density.

Temporary trench support systems shall be lifted progressively above each layer of backfill to ensure each layer is compacted against undisturbed ground.

Any deficiencies of trench filling exposed by settlement shall be corrected to the required standard.

9.5 Stormwater Drainage

9.5.1 Scope

Supply, install, test and commission new, gravity-flow stormwater drains on the site, to the locations, layout and details shown on the drawings, complete with all necessary components and accessories required for the satisfactory completion and performance of the stormwater system. All aspects of this works shall comply with the requirements of the NZ Building Code, related compliance Standards, Regulations and Acts, and to the requirements of the Territorial Authority, and as specified herein and on the design drawings and schedules. Ancillary work and/or services not specifically mentioned but necessary to complete the installation shall be deemed included.

Install stormwater drains in natural ground, beneath and/or external to the building, for the distances indicated on the drawings. Allow for all inspection openings, bends, branches, manholes, inspection chambers, etc., as required and indicated on the drawings. Unless shown otherwise on the drawings, the stormwater drains shall be connected to the roof and surface stormwater installations, and discharge to the stormwater network.

The stormwater drainage plans are diagrammatic only. Allow for all necessary inspection fittings, cleaning eyes, and traps in accordance with AS/NZS 3500.3 and to comply with the New Zealand Building Code, and as required by the Territorial Authority. Refer to the drawings for the dimensioned locations of roof drainage system rainwater pipes and outlets, and surface drainage outlets, etc.

9.5.2 Requirements

9.5.2.1 Workmanship

Stormwater drainage work shall be carried out by qualified and experienced tradespersons, familiar with all required installation requirements, under the direct supervision of a NZ certified Registered

Drain Layer, in accordance with AS/NZS 3500.3 and to comply with the New Zealand Building Code, and all local codes and regulatory authority requirements, and the conditions of the Building Consent.

All pipe cutting, jointing, and supporting techniques shall be exactly as recommended by the pipe manufacturer. Pipes, fittings and accessories shall be handled and installed in such a manner that prevents any damage to the component.

All work shall be such as to leave a neat, efficient, robust and watertight installation.

Carry out all necessary inspections and tests during installation to ensure compliance with the design specifications and regulatory requirements. Provide test result sheets to the Contract Administrator to show compliance has been achieved.

Take all necessary precautions during installation to protect the stormwater drainage system from damage, and to prevent the entry of:
- soil, sand, or rock;
- sewage, including the contents of any septic tank, or trade waste; or
- any other substance that could damage or impede the operation of the stormwater drainage network.

Ensure that any installed drain is adequately protected from any damage and excessive loading during the remaining construction period.

Protect adjacent finished work and surfaces from damage and contamination during installation. Any damage to fittings or finished surfaces shall be made good by the appropriate trade at the Drain Layer's expense.

Any associated electrical wiring and prescribed electrical work (by others) shall be carried out by a qualified electrician in accordance with the electrical standards and regulations and the Electrical specification.

9.5.3 Trench Excavation

9.5.3.1 Excavation

Locate all existing buried services before commencing excavation work in any area.

Excavations for trenches and pits shall be properly executed and supported in accordance with the requirements of AS/NZS 3500.3.

Carry out excavation work to comply with all relevant health and safety regulations and guidelines, including the 'Excavation Safety - Good Practice Guidelines'.

Unless specified otherwise, the excavation of trenches shall be taken out by open cut to the levels and grades shown or implied on the drawings. Excavate trenches to the depths which will provide for the appropriate type of bedding.

Trench excavations shall be of sufficient width to allow all operations necessary for the jointing of pipes and placing of the specified backfill. The bottom width of the trenches shall at least the combined measurement of the outside diameter of the pipe plus 200mm - with a minimum clearance of 100mm on each side of the drain barrel. The trench width at the top of the pipe shall not exceed the outside diameter of the pipe plus 600mm unless the pipe in the trench is covered with concrete. The trench above the top of the pipe may be cut wider, either by excavating a wider bench or by battering the trench wall.

Where a trench has been excavated deeper than required without authorisation, the excess depth shall be filled either with bedding material compacted to achieve a density as near to the original soil density as possible, or with concrete.

9.5.4 Pipe Laying

9.5.4.1 Bedding Pipes

Provide a minimum 75mm thick underlay layer of well compacted bedding material for all pipes. A chase shall be excavated in the bedding to accommodate any jointing socket or fitting in the drain. The pipe embedment material shall be laid and compacted so that the pipe is evenly and continuously supported along its length on either side of the pipe, and with an overlay layer minimum 150mm thick.

When trench support systems are used, the bedding material shall be placed and compacted in a manner so that no loss of compaction results from removal of the trench side support systems. The trench support shall be removed in such a way as to ensure that the placing and compaction of the bedding material occurs below the trench supports and directly against the undisturbed ground of the trench walls.

After completion of the jointing and inspection of drain pipes, place and compact the bedding surround material around the pipe to the required depth over the pipe. The material shall be carefully placed around and over the pipe using hand tamping and in a manner that ensures the pipe is uniformly supported all round its perimeter and without voids. Take care during placement and compaction to ensure the pipe is not displaced or damaged.

9.5.4.2 Laying Pipes

Install stormwater drains in accordance with AS/NZS 3500.3 to the layout, levels and grades shown on the drawings. Drain pipes shall be laid to provide maximum falls, in straight lines and at an even grade, without obstruction to flow, and with full allowance for bedding.

Before installing the pipes, check the bore of each pipe is free from foreign matter and that the pipe exterior and the socket have not been damaged in handling or storage. All pipelines shall be kept clean and free of dirt and debris at all times during installation, testing and commissioning.

PVC-U stormwater drain pipes shall be properly jointed (rubber ring joint or solvent welded joint) to produce a watertight seal in accordance with the manufacturer's instructions.

Start laying main drains at the point of outfall and insert junctions for branch drains as the work proceeds. Pipes shall be laid with the least number of bends, in the centre of the trench, in straight lines between bends, and to the grades and locations shown on the drawings.

Install all necessary fittings, including inspection openings, bends and junctions, to the locations shown on the drawings and in accordance with the manufacturer's instructions. Where not specified on the drawings or schedules, fittings for inspection openings, bends, and junctions shall be selected from the PVC-U pipe system range of products and installed in accordance with the manufacturer's instructions.

Other than precautions against damage by displacement or floating pipes, no bedding surround material or backfill shall be placed until the laying of the drain has been inspected by the Territorial Authority.

9.5.5 Connection

9.5.5.1 Public Network - Street Mains Connection

Connect to discharge the stormwater drainage line directly to the public stormwater mains in accordance with the requirements of the Territorial Authority and as shown on the drawings.

10 ELECTRICAL

10.1 Preliminary

Refer to General Conditions of Contract and the Special Conditions in this Specification as appropriate. Read this section in conjunction with all other trade sections.

10.2 Compliance

Comply with the New Zealand Building Code 1992 including all revisions and amendments, Verification Methods where appropriate, and construction principles that are embodied in the Acceptable Solutions.

Comply with all relevant provisions and recommendations of:

2053.1:2001(AS/NZS)	Conduits and fittings for electrical installations - General requirements
2201.1:2007(AS/NZS)	Intruder alarm systems - Client's premises - Design, installation, commissioning and maintenance
2293.2:2019(AS|NZS)	Emergency lighting and exit signs for buildings - Part 2: Routine service and maintenance
3000:2018(AS|NZS)	Electrical installations - Known as the Australian/New Zealand Wiring Rules
3012:2019(AS|NZS)	Electrical installations - Construction and demolition sites
3085.1:2004(AS/NZS)	Telecommunications installations - Basic requirements
3100:2009(AS/NZS)	Approval and test specification - General requirements for electrical equipment
3112:2011(AS/NZS)	Approval and test specification - Plugs and socket-outlets
3191:2008(AS/NZS)	Electrical flexible cords
5000.1:2005(AS/NZS)	Electric cables - Polymeric insulated - For working voltages up to and including 0.6/1 (1.2) kV
60227.5:2003(AS/NZS)	Polyvinyl chloride insulated cables of rated voltages up to and including 450/750 V - Flexible cables (cords)
60335.2.30:2015(AS|NZS)	Household and similar electrical appliances - Safety - Part 2.30: Particular requirements for room heaters
60335.2.30:2015(AS|NZS)INCIEC	Household and similar electrical appliances - Safety - Part 2.30: Particular requirements for room heaters
60335.2.35:2013(AS/NZS)	Household and similar electrical appliances - Safety - Part 2.35: Particular requirements for instantaneous water heaters
60598.2.2:2016(AS|NZS)	Luminaires - Part 2.2: Particular requirements - Recessed luminaires
60598.2.22:2005(AS/NZS)	Luminaires - Particular requirements - Luminaires for emergency lighting
60898.1:2004(AS/NZS)	Electrical accessories - Circuit-breakers for overcurrent protection for household and similar installations - Circuit-breakers for a.c. operation
61009.1:2015(AS/NZS)	Residual current operated circuit-breakers with integral overcurrent protection for household and similar uses (RCBOs) - Part 1: General rules

6104:1981(NZS)	Specification for emergency electricity supply in buildings
NZECP 54	Recessed luminaires

10.3 Workmanship

10.3.1 General

Supply and install all materials, including all necessary minor and incidental items, for proper completion of all of the electrical services specified or shown on the drawings. The contract will not be deemed to be complete until the Electrician has provided an Electrical Certificate of Compliance (made available to the Contractor in time for the Code Compliance Certificate application).

10.3.2 Workmanship

All electrical work shall be carried out by, or under the direct control of, registered tradesmen, and shall be to recognized high standards. All work shall be such as to leave a neat, efficient and robust installation. Neatly label switchboards to identify each circuit.

The cutting away and checking of timbers shall be limited to such dimensions as will not prejudice the purpose for which the timber is used; observe NZS 3604: 2011 restrictions on the holing and checking of joists and beams. Chasing and checking of other materials shall be only to approval.

1. BRANZ Apprasial No.812 (2019) - Sikalastic Interior Waterproofing System
2. Clearlite Shower Shower Tray Installation
3. Clearlite Shower Wall Liner Installation
4. Sikalastic Interior Waterproofing System Installation Details
5. Sika BlackSeal Plus - Slab Edge Waterproofing Membrane
6. Roof Cladding
7. Dektite - Pipe Penetration for Pressed Metal Tile
8. Masons - Window Flashing Tape - Codemark Certificate
9. Thermakraft 215 - Roofing Underlay
10. BRANZ Apprasial No.548 (2019) - Tekton Building Wrap
11. Masons - Window Flashing Tape - Installation
12. DPC - Malthoid Damp Proof Course
13. Lumberlok Stud to Top Plate Fixing Schedule
14. Ecoply - EP1
15. Ecoply - EPG
16. GIB - GS1-N
17. Pipe Materials for Hot & Cold Water
18. Rheem 180l Mains Pressure HWC
19. E1/AS1 - Bedding and Backfilling
20. Brick Specification
21. CodeMark Certificate of Conformity - Firth Ribraft® Floor System
22. BRANZ Appraisal No.928 (2016) - GIB EzyBrace Systems 2016
23. BRANZ Appraisal No.427 (2007) - GIB Aqualine Wet Area Systems
24. BRANZ Appraisal No.427 (2007) - GIB Aqualine® Wet Area Systems

BRANZ Appraised
Appraisal No. 812 [2019]

SIKALASTIC-152 AND SIKALASTIC-220W INTERIOR WATERPROOFING MEMBRANES

Appraisal No. 812 (2019)

This Appraisal replaces BRANZ Appraisal No. 812 (2013).

BRANZ Appraisals

Technical Assessments of products for building and construction.

Sika (NZ) Ltd
PO Box 19 192
Avondale
Auckland 1746
Tel: 0800 SIKA NZ
Fax: 0800 SIKA FAX
Web: www.sika.co.nz

BRANZ
1222 Moonshine Rd,
RD1, Porirua 5381
Private Bag 50 908
Porirua 5240,
New Zealand
Tel: 04 237 1170
branz.co.nz

Product

1.1 Sikalastic-152 and Sikalastic-220W Waterproofing Membranes are two and single part waterproofing membranes for use under ceramic or stone tile finishes in internal wet areas.

Scope

2.1 Sikalastic–152 and Sikalastic-220W Waterproofing Membranes have been appraised for use as waterproofing membranes for internal wet areas of buildings, within the following scope:

- on floor substrates of concrete, flooring grade particleboard, plywood, compressed fibre cement sheet and fibre cement sheet tile underlay, and on wall substrates of concrete, concrete masonry, wet area fibre cement sheet lining systems and wet area plasterboard lining systems; and,
- when protected from physical damage by ceramic or stone tile finishes; and,
- where floors are designed and constructed such that deflections do not exceed 1/360th of the span.

2.2 The use of Sikalastic-152 and Sikalastic-220W Waterproofing Membranes on concrete slabs where hydrostatic or vapour pressure is present from below is outside the scope of this Appraisal.

2.3 Movement and control joints in the substrate must be carried through to the tile finish. The design and construction of the substrate and movement and control joints is specific to each building, and therefore the responsibility of the building designer and building contractor and is outside the scope of this Appraisal.

2.4 The ceramic or stone tile finishes are outside the scope of this Appraisal.

2.5 The membranes must be installed by trained installers, approved by Sika (NZ) Ltd.

Readers are advised to check the validity of this Appraisal by referring to the Valid Appraisals listing on the BRANZ website, or by contacting BRANZ.

Building Regulations

New Zealand Building Code (NZBC)

3.1 In the opinion of BRANZ, Sikalastic-152 and Sikalastic-220W Interior Waterproofing Membranes if designed, used, installed and maintained in accordance with the statements and conditions of this Appraisal, will meet the following provisions of the NZBC:

Clause B2 DURABILITY: Performance B2.3.1 (b) 15 years. Sikalastic-152 and Sikalastic-220W Waterproofing Membranes meet this requirement. See Paragraph 9.1.

Clause E3 INTERNAL MOISTURE: Performance E3.3.6. Interior wet area floors and walls incorporating Sikalastic-152 and Sikalastic-220W Waterproofing Membranes will meet this requirement. See Paragraphs 11.1- 11.6.

Clause F2 HAZARDOUS BUILDING MATERIALS: Performance F2.3.1. Sikalastic-152 and Sikalastic-220W Waterproofing Membranes meet this requirement and will not present a health hazard to people.

Technical Specification

4.1 Materials supplied by Sika (NZ) Ltd are as follows:

- **Sikalastic-152** is a two component, fibre reinforced mortar based on cement modified polymers. It has a very low elastic modulus and is designed to be used to waterproof substrates that are to be covered by tiles or stones finishes. It is supplied as an 8 kg Part A liquid and a 25 kg Part B powder, with a final mixed colour of grey.
- **Sikalastic-220W** is a single component, ready to use, solvent free, liquid waterproofing membrane suitable for interior waterproofing application. It is supplied as a blue grey colour in 7 or 16 kg buckets.
- **SikaPrimer-11W** is a water based primer for cement based substrates, plaster and plasterboard. It is a red liquid supplied in a 5 kg bottle can.
- **SikaPrimer-21W** is an epoxy based primer for non porous substrates. It is a light blue liquid and supplied in a 5 kg bottle can.
- **SikaSeal Tape-S** is a reinforcement tape with a woven bonding mesh and an expansion zone the middle to be used to reinforce all changes of direction. It comes as performed corners, wall flashings, floor flashings and rolls. It is 0.60 mm thick and coloured yellow/white.

Handling and Storage

5.1 All materials must be stored inside, up off concrete floors, in dry conditions, out of direct sunlight and out of freezing conditions. The membrane products have a shelf life of 12 months from date of manufacture in the original unopened packaging. Once opened, the products must be used within 3 months.

Technical Literature

6.1 Refer to the Appraisals listing on the BRANZ website for details of the current Technical Literature for the Sikalastic-152 and Sikalastic-220W Waterproofing Membranes. The Technical Literature must be read in conjunction with this Appraisal. All aspects of design, use, installation and maintenance contained in the Technical Literature and within the scope of this Appraisal must be followed.

Readers are advised to check the validity of this Appraisal by referring to the Valid Appraisals listing on the BRANZ website, or by contacting BRANZ.

Design Information

General

7.1 Sikalastic-152 and Sikalastic-220W Waterproofing Membranes are for use in buildings where an impervious waterproof membrane is required to floors and walls to prevent damage to building elements and adjoining areas.

7.2 The membranes must be protected from physical damage by the application of ceramic or stone tile finishes.

7.3 Movement and control joints may be required depending on the shape and size of the building or room, and the tile finish specified. Design guidelines can be found in the BRANZ publication Good Practice Guide – Tiling.

7.4 Timber framing systems must comply with NZS 3604, or where specific engineering design is used, the framing shall be of at least equivalent stiffness to the framing provisions of NZS 3604, or comply with the serviceability criteria of AS/NZS 1170. In all cases framing must be provided so that the maximum span of the substrate as specified by the substrate manufacturer is met and all sheet edges are fully supported. Timber framing systems supporting the substrates must be constructed such that deflections do not exceed 1/360th of the span. Where NZS 3604 is used, the allowable joist spans given in Table 7.1 shall be reduced by 20%.

Substrates

Plywood

8.1 Plywood must be a minimum of 17 mm thick complying with AS/NZS 2269, CD Grade Structural with sanded C face upwards and treated to H3 (CCA treated). LOSP treated plywood must not be used. The plywood must be supported with dwangs or framing with a maximum span of 400 mm in each direction and fixed with 10 g x 50 mm stainless steel countersunk head screws at 150 mm centres on the edges and 220 mm through the body of the sheets.

Fibre Cement Compressed Sheet/ Fibre Cement Sheet Tile Underlay

8.2 Fibre cement compressed sheet must be manufactured to comply with the requirements of AS 2908.2 and must be specified by the manufacturer as being suitable for use as a wet area substrate. Fibre cement sheet tile underlay must be suitable for use in internal wet areas. Installation must be in accordance with the instructions of the manufacturer.

Particleboard

8.3 Particleboard must be specified for the end use in accordance with NZS 3602.

Concrete and Concrete Masonry

8.4 Concrete and concrete masonry substrates must be to a specific engineering design meeting the requirements of the NZBC, such as concrete construction to NZS 3101, concrete slab-on-ground to NZS 3604, and concrete masonry to NZS 4229 and NZS 4230.

Wet Area Wall Linings

8.5 Plasterboard wall linings must be manufactured to comply with AS/NZS 2588 and be suitable for use in internal wet areas.

8.6 Fibre cement sheet must be suitable for use in wet areas.

Durability

Serviceable Life

9.1 Sikalastic-152 and Sikalastic-220W Waterproofing Membranes, when subjected to normal conditions of environment and use, are expected to have a serviceable life of at least 15 years and be compatible with ceramic or stone tile finishes with a design service life of 15-25 years.

Readers are advised to check the validity of this Appraisal by referring to the Valid Appraisals listing on the BRANZ website, or by contacting BRANZ.

Maintenance

10.1 No maintenance of the membranes will be required provided significant substrate movement does not occur and the tile finish remains intact. Regular checks must be made of the tiled areas to ensure they are sound and will not allow moisture to penetrate. Any cracks or damage must be repaired immediately by repairing the tiles, grouts and sealants.

10.2 In the event of damage to the membranes, the tiling must be removed and the membrane repaired by removing the damaged portion and applying a patch as for new work.

10.3 Drainage outlets must be maintained to operate effectively, and ceramic or stone tile finishes must be kept clean.

Internal Moisture

11.1 Sikalastic-152 and Sikalastic-220W Waterproofing Membranes are impervious to water and when appropriately designed and installed will avoid the likelihood of water penetrating behind linings or entering concealed spaces.

11.2 Sikalastic-152 and Sikalastic-220W Waterproofing Membranes are suitable for use to contain accidental overflow to meet NZBC Clause E3.3.2. A means of code compliance for overflow is given in NZBC Acceptable Solution E3/AS1 Paragraph 2.

11.3 Surfaces must be finished with ceramic or stone tile finishes. A means of code compliance to NZBC Clause E3.3.3 and E3.3.4 is given in NZBC Acceptable Solution E3/AS1 Paragraph 3.1.1 (b), 3.1.2 (b) and 3.3.1 (b).

11.4 Falls in showers and shower areas must be a minimum of 1 in 50. In unenclosed showers, falls must extend a minimum of 1500 mm out from the shower rose. Floor wastes and drainage flanges must be provided and the floor must fall to the outlet.

11.5 The waterproofing membranes must completely cover shower bases, and for unenclosed showers it must extend a minimum of 1500 mm out from the shower rose. Further design guidance on waterproofing wet areas, including waterproofing walls and junctions can be obtained from AS 3740, the BRANZ publication Good Practice Guide – Tiling, and flooring and wallboard manufacturers.

11.6 Where water resistant wall finishes such as prefinished sheet materials are used, they must flash over the membrane a minimum of 30 mm.

Installation Information

Installation Skill Level Requirement

12.1 Installation must always be carried out in accordance with the Sikalastic-152 and Sikalastic-220W Waterproofing Membranes Technical Literature and this Appraisal by, or under the supervision of, a Licensed Building Practitioner (LBP) with the relevant Licence Class.

12.2 Installation and finishing of components and accessories supplied by Sika (NZ) Ltd and its approved applicators must be completed by trained applicators, approved by Sika (NZ) Ltd.

12.3 Installation of the accessories supplied by the building contractor must be carried out in accordance with the Sikalastic–152 and Sikalastic-220W Waterproofing Membranes Technical Literature and this Appraisal by, or under the supervision of, a Licensed Building Practitioner (LBP) with the relevant Licence Class.

Readers are advised to check the validity of this Appraisal by referring to the Valid Appraisals listing on the BRANZ website, or by contacting BRANZ.

Preparation of Substrates

13.1 Substrates must be dry, clean and stable before installation commences. With surfaces that are even and free from nibs, sharp edges, dust, dirt or other materials such as oil, grease or concrete formwork release agents.

13.2 The relative humidity of the concrete must be 75% or less before membrane application. Concrete substrates can be checked for dryness by using a hygrometer as set out in BRANZ Bulletin No. 585.

13.3 All voids, cracks, holes, joints and excessively rough areas must be filled to achieve an even and uniform surface. Junctions of substrate abutments, such as at wall/floor and wall/wall junctions must have SikaSeal Tape-S installed as set out in the Technical Literature.

13.4 Substrates must be primed with the specified primer and allowed to dry fully before the membrane is installed.

Membrane Installation

14.1 Installation must not be undertaken where the substrate surface temperature is below 5°C or above 35°C.

14.2 Sikalastic-152 liquid and Sikalastic-152 powder must be mixed and left to stand for 5 minutes before re-mixing, then applying. Sikalastic-220W must be thoroughly stirred before application.

14.3 Sikalastic-152 must be applied in a minimum of two coats at the rates set out in the Technical Literature. Subsequent coats must be applied in an opposite direction to the previous coat. The maximum recommended thickness for each coat is 2.0 mm. The total finished system thickness must be a maximum of 4.0 mm.

14.4 Sikalastic-220W must be applied in 2 coats at a minimum of 0.50 mm wet film thickness per coat.

14.5 Application can be made by steel trowel for the Sikalastic-152 as specified in the Technical Data and roller (medium/long nap) or brush (long bristle) for the Sikalastic-220 W.

14.6 In all situations, reinforcement provisions as set out in this Appraisal and the Technical Literature apply.

14.7 Clean up may be undertaken with water.

Tiling

15.1 The membranes must be fully cured before tiling. The cured membranes must be protected at all times to prevent mechanical damage, so may require temporary covers until the finishing is completed.

15.2 Tiling must be undertaken in accordance with AS 3958.1 and the BRANZ publication Good Practice Guide – Tiling. The compatibility of the tile adhesive must be confirmed with the adhesive manufacturer or Sika (NZ) Ltd.

Inspections

16.1 Critical areas of inspection are:

- Construction of substrates, including crack control and installation of bond breakers and movement control joints.
- Moisture content of the substrate prior to the application of the membrane.
- Acceptance of the substrate by the membrane installer prior to application of the membrane.
- Installation of the membrane to the manufacturer's instructions, particularly installation to the correct thickness and use of reinforcement.
- Membrane curing and integrity prior to the installation of tiles including protection from mechanical damage during curing and prior to tile installation.

Health and Safety

17.1 Safe use and handling procedures for the membranes are provided in the Technical Literature. The materials must be used in conjunction with the relevant Material Safety Data Sheet.

Readers are advised to check the validity of this Appraisal by referring to the Valid Appraisals listing on the BRANZ website, or by contacting BRANZ.

Basis of Appraisal

The following is a summary of the technical investigations carried out:

Tests

18.1 The material properties of Sikalastic-152 and Sikalastic-220W have been assessed by various organisations. The results of this testing have been reviewed by BRANZ and found to be satisfactory.

Other Investigations

19.1 An assessment was made of the durability of Sikalastic-152 and Sikalastic-220W Waterproofing Membranes by BRANZ technical experts.

19.2 Site inspections were carried out by BRANZ to examine the practicability of installation.

19.3 The Technical Literature has been examined by BRANZ and found to be satisfactory.

Quality

20.1 The manufacture of the membranes has not been examined by BRANZ, but details regarding the quality and composition of the materials used were obtained by BRANZ and found to be satisfactory.

20.2 The quality management system of the membrane's manufacturer has been assessed and found to be satisfactory.

20.3 The quality of supply to the market is the responsibility of Sika [NZ] Ltd.

20.4 Designers are responsible for the building design, and building contractors are responsible for the quality of installation of the framing systems and the substrates.

20.5 Quality on site is the responsibility of the trained installers, approved by Sika [NZ] Ltd.

20.6 Building owners are responsible for the maintenance of the ceramic tiles in accordance with the instructions of Sika [NZ] Ltd.

Sources of Information

- AS 2908.2: 2200 Cellulose-cement products – flat sheet.
- AS 3740 – 2010 Waterproofing of domestic wet areas.
- AS 3958.1: 1991 Guide to the installation of ceramic tiles.
- AS/NZS 1170: 2002 Structural design actions.
- AS/NZS 2269: 2012 Plywood – Structural.
- AS/NZS 4858: 2004 Wet area membranes.
- NZS 3101: 2006 Concrete structures standard.
- NZS 3602: 2003 Timber and wood-based products for use in buildings.
- NZS 3604: 2011 Timber framed buildings.
- NZS 4229: 2013 Concrete masonry buildings not requiring specific engineering design.
- NZS 4230: 2004 Design of reinforced concrete masonry structures.
- Good Practice Guide – Tiling, BRANZ, Third Edition, 2015.
- Good Practice Guide – Membrane Roofing, BRANZ , Second Edition, 2015.
- Ministry of Business, Innovation and Employment Record of amendments - Acceptable Solutions, Verification Methods and handbooks.
- The Building Regulations 1992.

Readers are advised to check the validity of this Appraisal by referring to the Valid Appraisals listing on the BRANZ website, or by contacting BRANZ.

BRANZ

In the opinion of BRANZ, Sikalastic-152 and Sikalastic-220W Interior Waterproofing Membranes are fit for purpose and will comply with the Building Code to the extent specified in this Appraisal provided they are used, designed, installed and maintained as set out in this Appraisal.

The Appraisal is issued only to Sika (NZ) Ltd, and is valid until further notice, subject to the Conditions of Appraisal.

Conditions of Appraisal

1. This Appraisal:
   a) relates only to the product as described herein;
   b) must be read, considered and used in full together with the Technical Literature;
   c) does not address any Legislation, Regulations, Codes or Standards, not specifically named herein;
   d) is copyright of BRANZ.
2. Sika (NZ) Ltd:
   a) continues to have the product reviewed by BRANZ;
   b) shall notify BRANZ of any changes in product specification or quality assurance measures prior to the product being marketed;
   c) abides by the BRANZ Appraisals Services Terms and Conditions;
   d) warrants that the product and the manufacturing process for the product are maintained at or above the standards, levels and quality assessed and found satisfactory by BRANZ pursuant to BRANZ's Appraisal of the product.
3. BRANZ makes no representation or warranty as to:
   a) the nature of individual examples of, batches of, or individual installations of the product, including methods and workmanship;
   b) the presence or absence of any patent or similar rights subsisting in the product or any other product;
   c) any guarantee or warranty offered by Sika (NZ) Ltd.
4. Any reference in this Appraisal to any other publication shall be read as a reference to the version of the publication specified in this Appraisal.
5. BRANZ provides no certification, guarantee, indemnity or warranty, to Sika (NZ) Ltd or any third party.

For BRANZ

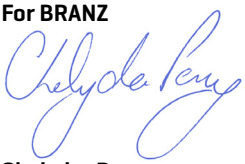

Chelydra Percy
Chief Executive

Date of Issue:
14 June 2019

Readers are advised to check the validity of this Appraisal by referring to the Valid Appraisals listing on the BRANZ website, or by contacting BRANZ.

CLEARLITE BATHROOMS

Shower Tray Installation Instructions

1. Ensure that the walls are plumb and square. The bottom plates must be square to each other to allow the tray to sit in its correct position. For Alcove three sided showers we recommend building the third wall once the tray is onsite to ensure the correct opening is achieved
2. We recommend adding additional studs into the wall that finish flush with the tray ends, this gives the shower installer a solid fixture to screw his Door set into and eliminates the need for wall anchors
   Install a horizontal batten to the bottom plate to support the Gib board's lower edge when cut

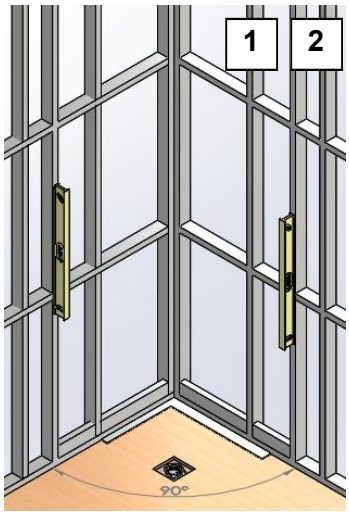

3. Ensure the floor is level
   A Useful Guide
   For every millimetre the tray is out of level, adjustment of the enclosure will be reduced by 2mm.
   e.g. if the tray is 5mm out of level there may be no adjustment left to accommodate out of plumb walls.
   If the floor is not level
   - Concrete floors - level using a leveling compound available from most flooring outlets.
   - Wood floors - Sand or level using a leveling compound

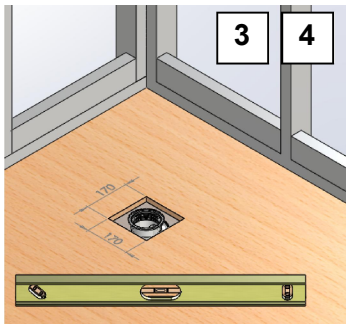

4. Have a qualified plumber install the shower fittings and the waste

   IMPORTANT:

   - **Hole cut out for waste must not exceed 170mm square**
   - **Concrete floors must be back filled around the waste area particularly where any additional cuts in the concrete. (use concrete or a similar solid fill material)**

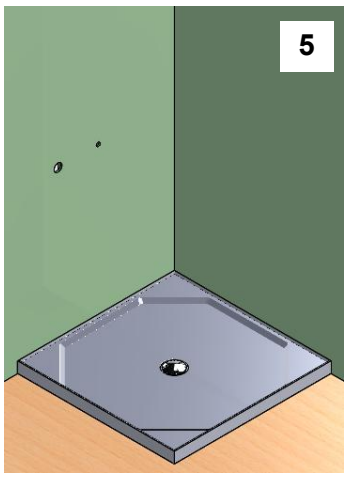

5. Line the framing with 10mm virgin Gib board or an equivalent plaster board to the suppliers recommendations. If installing a 3 sided shower tray it is recommended to line the walls after the tray is installed (Villa board is also an acceptable wall substrate)

   DO NOT

   Gib Stop, sand, seal or paint the wallboard surface as this will affect the adhesion of the acrylic wall liner

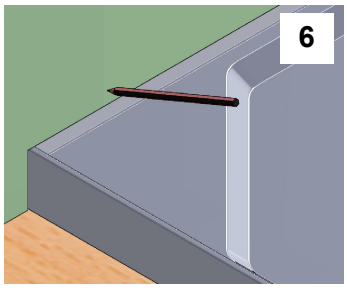

6. Place the shower tray against the Gib board. Scribe a pencil line on the Gib board 5mm above the tray. Ensure to allow for the thickness of the Gib board as the tray will be rebated into the Gib board in its final position (The pencil line marking the front face of the tray will need to be moved back in by 10mm)

7. Remove the tray and cut out the rebate in the Gib Board

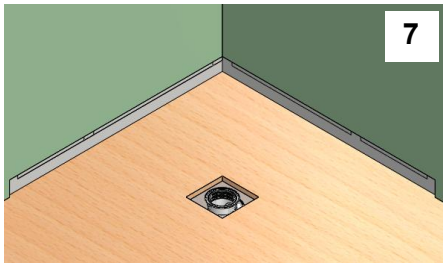

Pre-installation checks

8. Check that the tray is level, if not correct before progressing any further

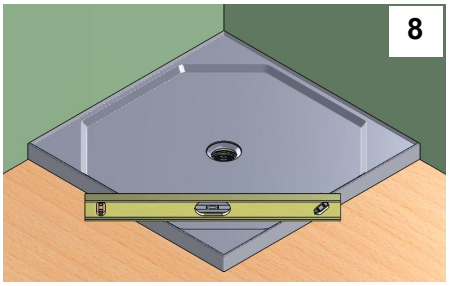

DO NOT

- **Under any circumstance pack the perimeter of the tray to level**
- **Use expanding foams to support the tray, these are of low density and will collapse over time**

Warranty will be voided if the shower tray is not correctly supported

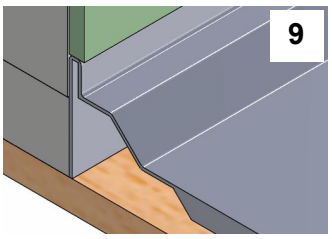

9. Place the tray back into the recess checking that the tray's upstand front face does not protrude further than the Gib board surface. (this could be a result of the walls not being set 90º to each other) If the upstand does protrude further than the Gib board surface the tray will need to be rebated into the bottom plate

10. Check to ensure that the waste outlet will align with the waste body already installed into the floor

11. Sweep the immediate area where the tray will be installed to ensure it is free from any dust or contaminants

Installation

12. The tray is supplied with a clear protective film to prevent surface damage. Remove the film from the upstand and waste area leaving the film intact on the remainder of the tray. This will protect the surface until installation is complete.

13. Apply a bead of Silicone sealant to the face of the Bottom plates. This will prevent the possibility of any squeaking.

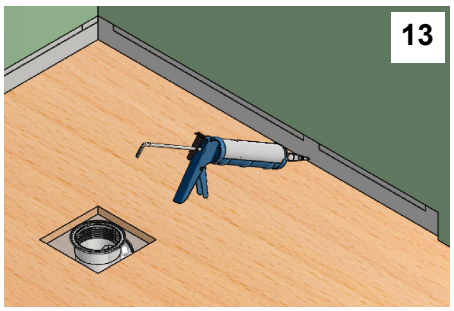

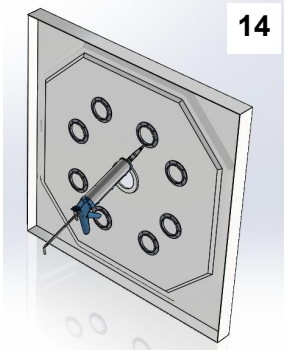

14. Using the supplied Showerbond adhesive apply a generous bead to each of the support rings on underside of the tray.

15. Place the tray into its final position

16. Install the easy clean waste as per the instructions provided with the waste (This must be fitted by a qualified plumber)

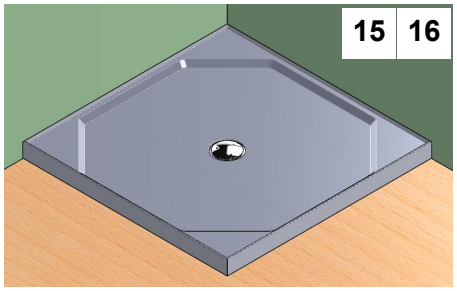

Do not stand on the tray until the Showerbond has cured (approx 24hrs).

CLEARLITE BATHROOMS

Corner Moulded Wall Liner Installation Instructions

Before Installation please check that your wall liner is undamaged

- Check to ensure the shower tray has been installed in accordance with the Tray Installation Instructions. The tray must be level to achieve optimum results
- Your Shower has been designed for walls lined with new 10mm Gib board or equivalent wallboards and Villa Board. **Ensure that area that will be covered by the Wall liner is not Gib stopped, sanded, sealed or painted – The Showerbond adhesive will not adhere to these surfaces**
- Only use the Showerbond adhesive supplied, failure to do so will void your warranty
- Ensure that any plumbing outlets are situated as not to obstruct the door when opened.

INSTALLATION

1. Carefully measure and cut out the wall liner for tap-ware. (refer to cutting and drilling instructions on next page)
   Trial fit the wall lining by offering it into the rear corner of tray. The liner must not protrude the front edge of the shower tray as this may affect the door installation.

2. If installing the wall liner onto a tray that has upstands on all four sides there may be a requirement to notch the bottom corners of the liner for correct fitment (see figs 2 & 2a)
   If the tray is installed level and the walls are plumb the liner should sit hard down to the tray surface**.** If the wall liner does not sit flat on the tray it may be scribed and trimmed using a hand plane or sandpaper

   Caution: Trimming the Wall liner will reduce its height, some discretion will be required to determine the amount of trimming possible
3. Using a pencil mark a line around the perimeter of the wall lining.
4. On the tray mark the diagonal position of the wall liner.
5. Remove the Wall Liner. Where the top of the Wall liner cuts across the rear corner attach the two 170mm Sup-port extrusions (supplied with the liner) 5mm below the pencil line as shown - Attach by removing the masking film from the Double sided tape and firmly pressing in place
6. Attach the third 170mm support extrusion to the rear of the wall liner 5mm down from the top (6a shows how this will appear once the wall is installed)

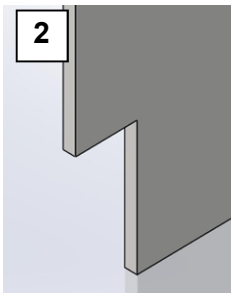

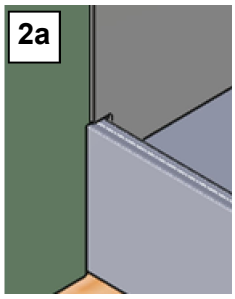

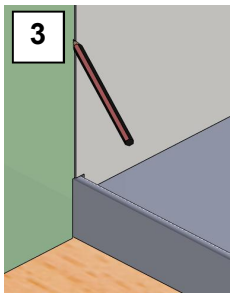

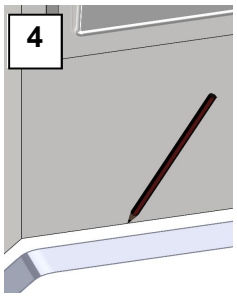

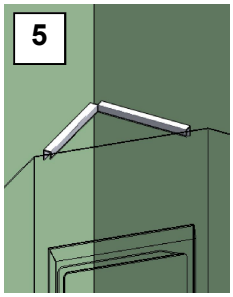

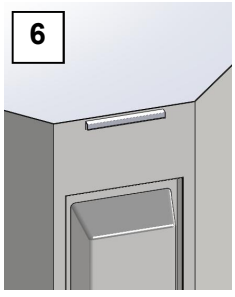

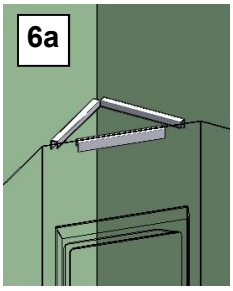

Installation Continued

7. Install the Wall Support Extrusion (310mm with mitred ends) to the tray -Remove the masking film from double sided tape and position the support 3mm back from the pencil line previously made in step 4 (to allow for liner thickness). Place in position and press down firmly
8. Ensure wallboard and rear of wall liner are free from dirt, dust and any contaminants. (To reduce static wipe the rear of the liner with a damp cloth)

9. Apply a **continuous** bead of NG silicone sealant 10mm in diameter along the full length of the Tray's Upstand inside edge .
10. Apply to the face of the Tray Wall Support extrusion and at the junction where it meets the trays upstands.

11. Using the supplied Shower Bond adhesive apply 5-6mm beads in vertical lines at 100mm spacing, staying 10mm in from the marked outline of the wall liner.
    Installation of liner must be complete within 15 min to avoid premature curing of adhesive.
12. Place wall lining into position and press firmly onto adhesive over entire surface. Wipe off any excess sealant or adhesive that may have oozed out
13. Apply Silicone to the top Wall Support extrusions

14. Install the Triangular Corner insert

15. Seal the top edge of the wall liner with a suitable sealant. Bear in mind if painting the Gib surface use a paintable sealant
16. Peel off protective film from lining and fit tap-ware.
    DO NOT remove the tray's protective masking yet.

17. The installation of the enclosure may begin immediately or as required.

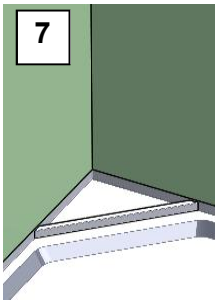

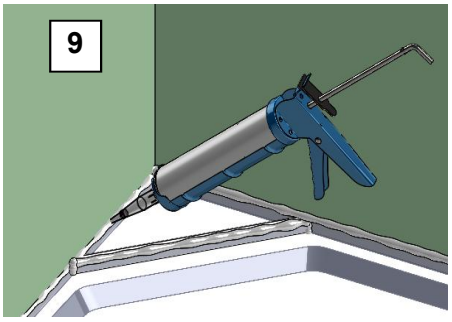

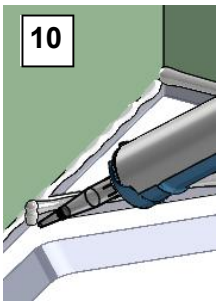

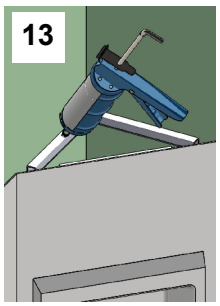

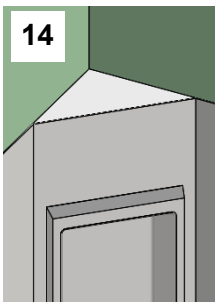

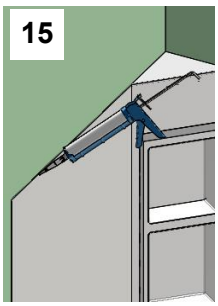

Cutting & Drilling

- Hacksaw or Jigsaw with a minimum of 18 teeth per inch.
- Holes up to 12mm in diameter can be drilled with standard twist drill with a reduced cutting angle.
- Holes larger than 12mm diameter can be cut using a hole saw.
- Edges can be finished with medium grit sandpaper or planed with a hand plane.

DRAWING DETAILS FOR INTERNAL WET AREAS PER AS 3740 [2004]

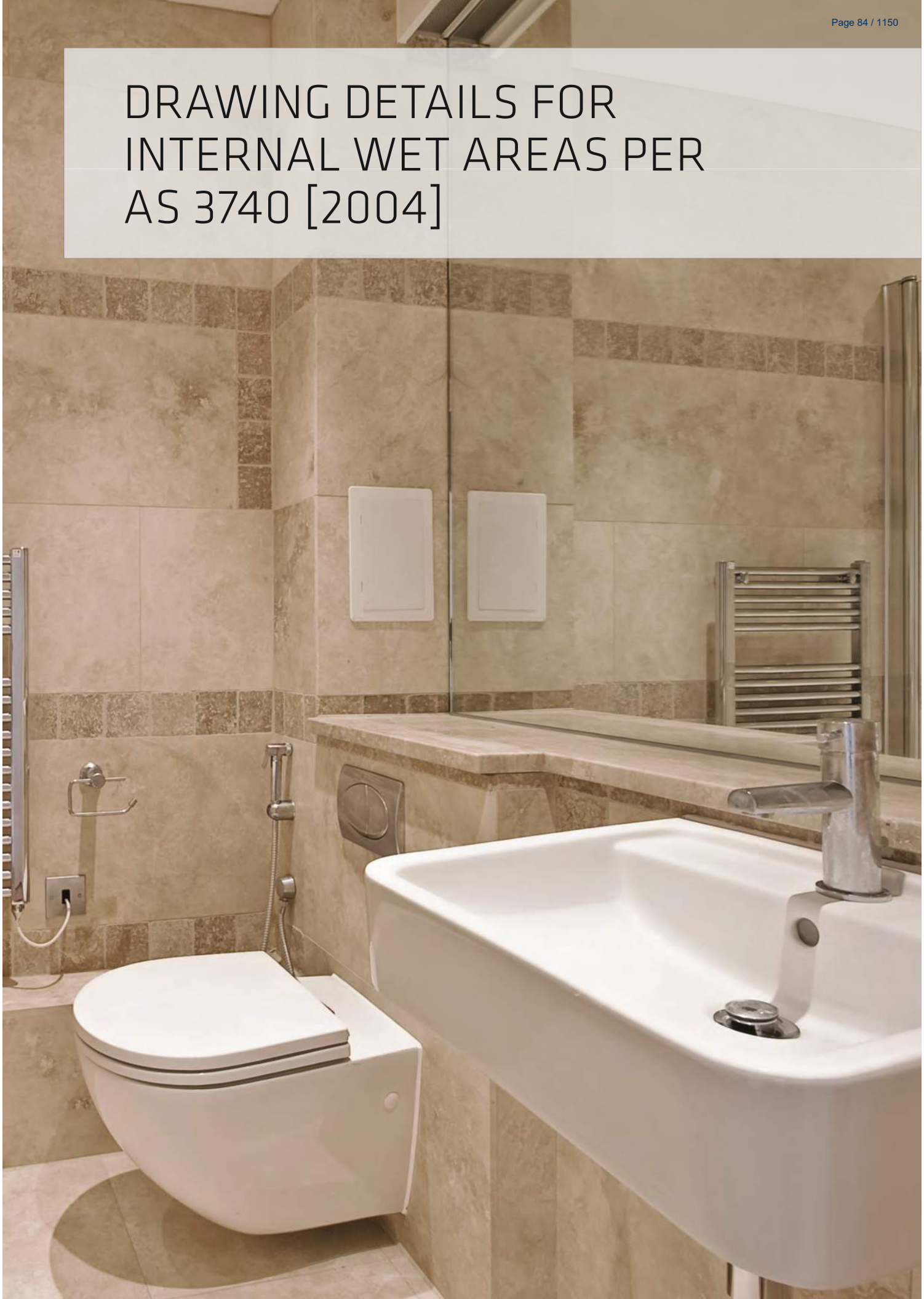

TABLE 4.1

GENERAL REQUIREMENTS FOR EXTENT OF APPLICATION

Vessels or area where the fixture is installed	Requirements for elements			
	Floors and horizontal surfaces	Walls	Wall junctions and joints	Penetrations
Shower area				
Enclosed and hobbed	Waterproof entire enclosed **shower area, including hob (see** Figure 4.3(a))	Waterproof to 150 mm min. above the **shower floor substrate or 25 mm min.** above the maximum retained water level and the remainder to be water resistant to a height of 1800 mm min. from finished floor level (see Figure 4.3(a))	Waterproof internal and external **corners and horizontal joints within** a minimum height of 1800 mm. above the floor level with a minimum width of 40 mm either side of junction (see Figure 4.3(a))	Seal all penetrations
Enclosed and hobless	Waterproof entire enclosed shower area including water stop	Waterproof to 150 mm min. above the shower floor substrate and the remainder to be water resistant to a height of 1800 mm min. from finished floor level (see Figure 4.3(a))		
Enclosed and stepped down	Waterproof entire enclosed shower area including the stepdown	Waterproof to 150 mm min. above the shower floor substrate or 25 mm min. above the maximum retained water level and the remainder to be water resistant to a height of 1800 mm min. **from finished floor level (see** Figure 4.3(a))		
Enclosed and preformed shower base	N/A	Water resistant to a height of 1800 mm min. from finished floor level (see Figure 4.3(a))	Waterproof internal and external corners and horizontal joints to a minimum height of 1800 mm. above the floor level with a minimum width of 40 mm either side of junction (see Figure 4.3(a))	Seal all penetrations

(*continued*)

TABLE 4.1 (*continued*)

Vessels or area where the fixture is installed	Requirements for elements			
	Floors and horizontal surfaces	**Walls**	**Wall junctions and joints**	**Penetrations**
Unenclosed	Waterproof entire shower area (see Figure 4.3(b))	Waterproof to 150 mm min. above the shower floor substrate or 25 mm min. above the maximum retained water level and the remainder to be water resistant to a height of 1800 mm min. from finished floor level (see Figure 4.3(b))	Waterproof internal and external corners and horizontal joints to a minimum height of 1800 mm. above the floor level with a minimum width of 40 mm either side of junction (see Figure 4.3(b))	Seal all penetrations
Areas outside the shower area for concrete and compressed fibre cement sheet flooring	Water resistant to entire floor	N/A	Waterproof all wall to floor junctions, where a flashing is used the horizontal leg shall be a minimum of 40 mm	N/A
Areas outside the shower area for timber floors including particleboard, plywood and other flooring materials	Waterproof entire floor	N/A	Waterproof all wall to floor junctions, where a flashing is used the horizontal leg shall be a minimum of 40 mm	N/A
Areas adjacent to baths and spas† for concrete and compressed fibre cement sheet flooring*	Water resistant to entire floor	Water resistant to a height of 150 mm min. above vessel and exposed surfaces below vessel lip to floor level* (see Figure 4.1)	Seal edges for extent of vessel and junction of bath enclosure with floor. Where the lip of the bath is supported by a horizontal surface this area shall be waterproof for showers over bath and water resist for all other cases (see Figure 4.1)	Seal all tap and spout penetrations where they occur in a horizontal surface
Areas adjacent to baths and spas† for timber floors including particleboard, plywood and other flooring materials*	Waterproof entire floor	Water resistant to a height of 150 mm min. above vessel and exposed surfaces below vessel lip to floor level*(see Figure 4.2)	Seal edges for extent of vessel and junction of bath enclosure with floor. Where the lip of the bath is supported by a horizontal surface this area shall be waterproof for showers over bath and water resist for all other cases (see Figure 4.2)	Seal all tap and spout penetrations where they occur in a horizontal surface

(*continued*)

TABLE 4.1 *(continued)*

Vessels or area where the fixture is installed	Requirements for elements			
	Floors and horizontal surfaces	**Walls**	**Wall junctions and joints**	**Penetrations**
Insert baths	N/A for floor under the bath Waterproof entire shelf area, incorporating a waterstop under the bath lip and project a minimum of 5 mm above the tile surface (see Figure 5.2(c))	N/A for wall under the bath Waterproof to 150 mm min. above the lip of the bath*	N/A for wall under the bath*	Seal all tap and spout penetrations where they occur in a horizontal surface
Walls adjoining other vessels (e.g., sink, basin or laundry tub)	N/A	Water resistant to a height of 150 mm min. above vessel if the vessel is within 75 mm min. of the wall (see Figure 4.4)	Where the vessel is fixed to a wall, seal edges for extent of vessel	Seal all tap and spout penetrations where they occur in a horizontal surface
Laundries and WCs	Water resistant to entire floor	Seal all wall to floor junctions with a skirting or flashing to 25 mm min. above the finished floor level, sealed to the floor	Waterproof all wall to floor junctions, where a flashing is used the horizontal leg shall be a minimum of 40 mm	N/A
Bathrooms and laundries requiring a floor waste in accordance with Volume One of the BCA	Waterproof and drain entire floor	N/A	Seal all wall to floor junctions with a skirting or flashing to 25 mm min. above the finished floor level, sealed to the floor	Waterproof where through the floor, otherwise N/A

LEGEND:
N/A = not applicable

* If a shower is included in a bath refer to the requirements for shower area walls and penetrations

† Does not apply to joinery fittings such as vanities

BUILDING TRUST

TECHNICAL DRAWING

4.1 Extent of treatment for wet areas - shower area over bath - enclosed shower - for concrete and compressed fibre cement sheet flooring.

Drawing details for internal wet areas per AS 3740 - 2004.

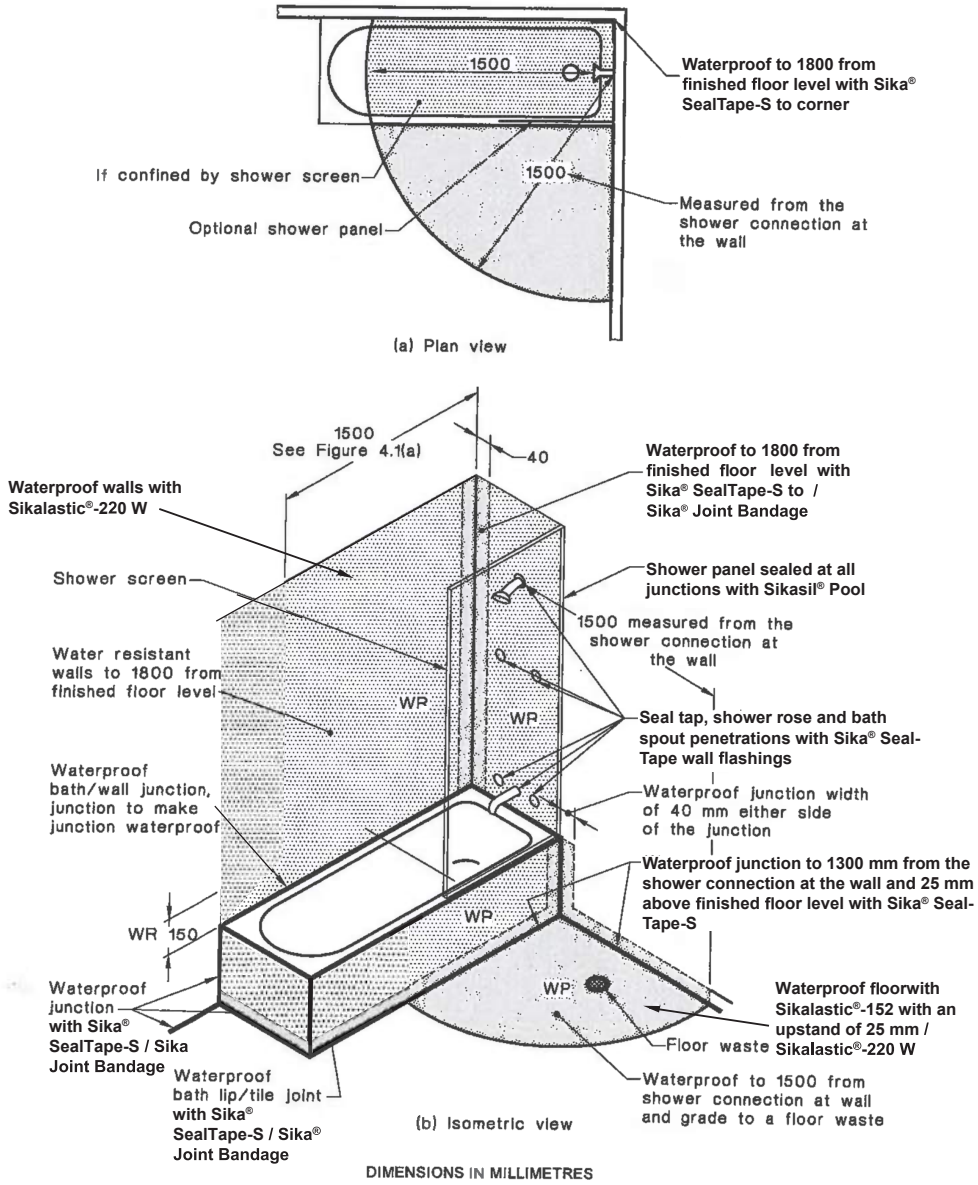

BUILDING TRUST

TECHNICAL DRAWING

4.2 Extent of treatment for wet areas - shower area over bath - unenclosed shower - for timber floors including particleboard, plywood and other flooring materials.

Drawing details for internal wet areas per AS 3740 - 2004.

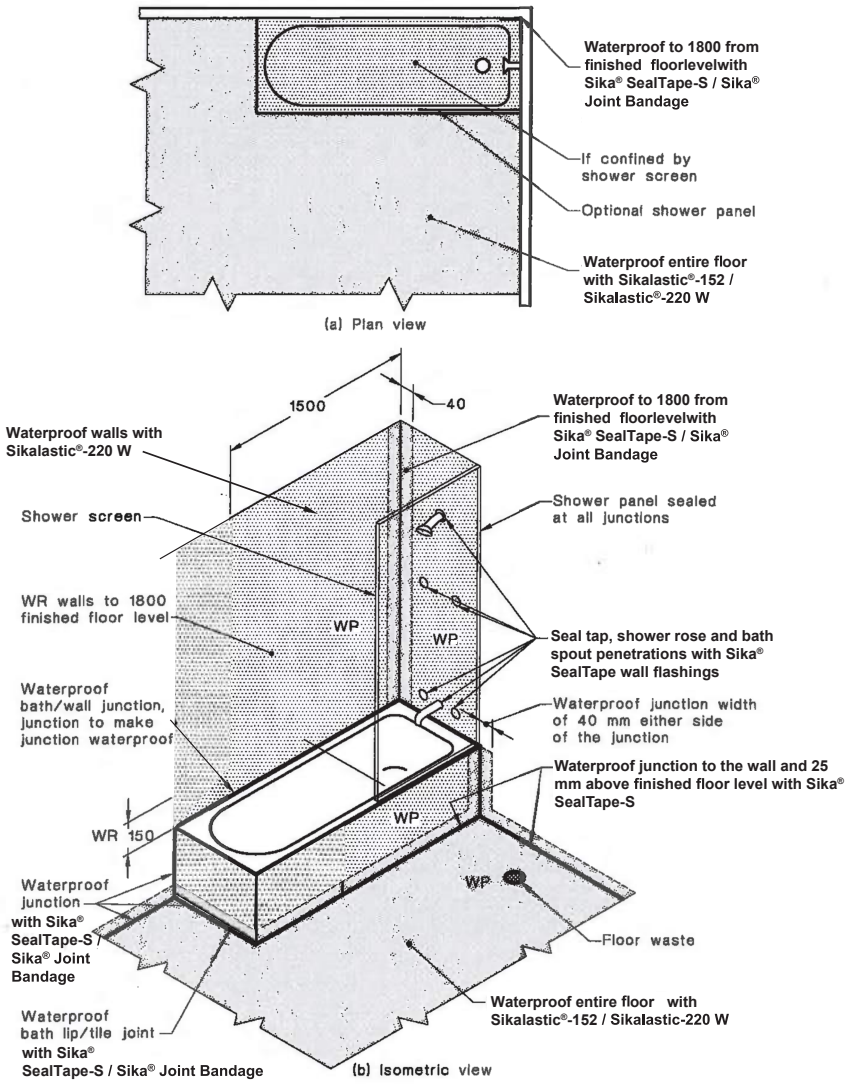

DIMENSIONS IN MILLIMETRES

BUILDING TRUST

TECHNICAL DRAWING

4.3 Extent of treatment for shower areas - concrete and compressed fibre cement sheet.

Drawing details for internal wet areas per AS 3740 - 2004.

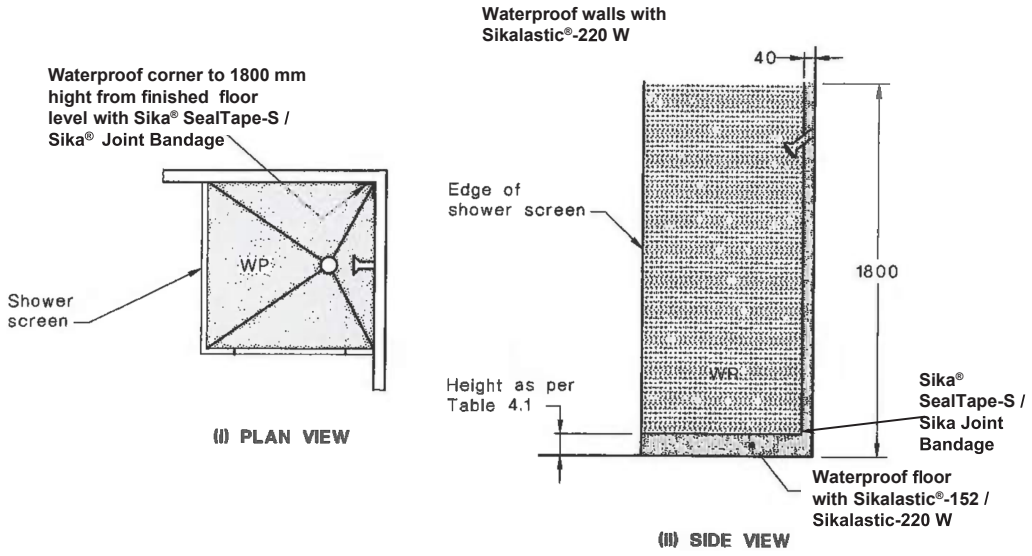

(a) Enclosed shower

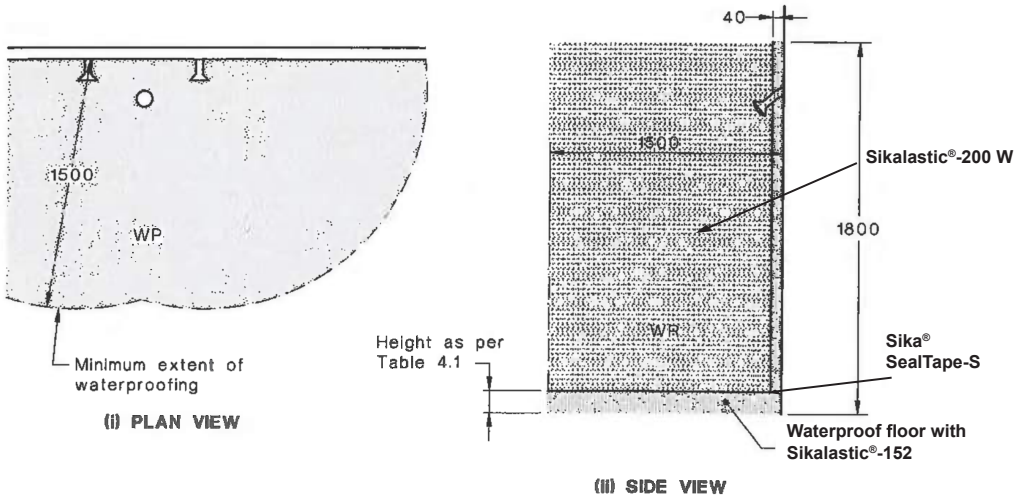

(b) Unenclosed showers—Concrete and compressed fibre cement sheet floors

DIMENSIONS IN MILLIMETRES

BUILDING TRUST

TECHNICAL DRAWING

4.4 Section through bath extent of treatment for wet areas - baths and other vessels.

Drawing details for internal wet areas per AS 3740 - 2004.

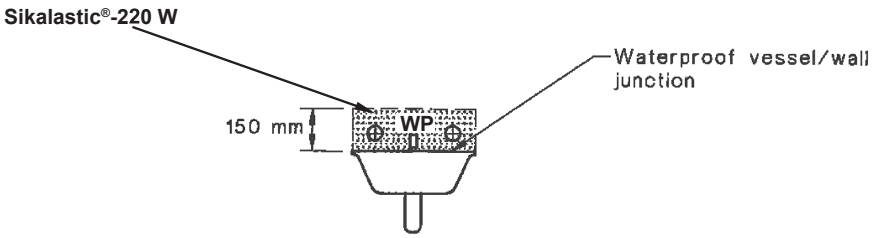

(a) Vessel abutting wall

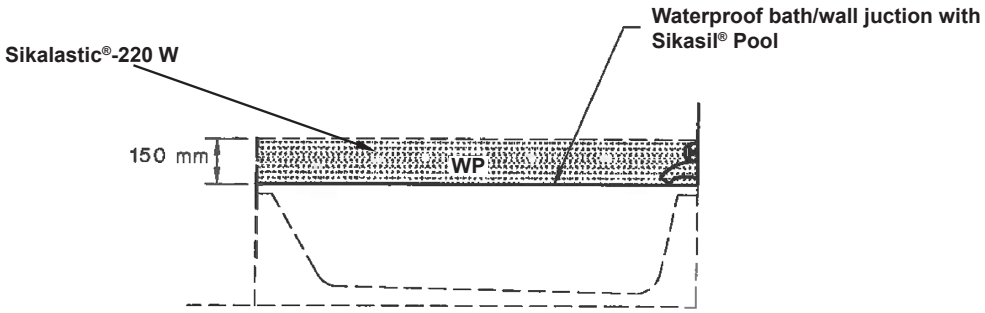

(b) Wall/bath junctions

BUILDING TRUST

TECHNICAL DRAWING

5.1 Typical preformed shower base junctions.

Drawing details for internal wet areas per AS 3740 - 2004.

BATHS & SPAS

Baths and spas shall be supported to prevent distortion and cracking. Baths and spas recessed into the wall shall be installed to allow the water-resistant surface materials of the wall to pass down inside the rim of the bath or spa (see Figures 5/2(a) and 5.2(b)). When installing baths and spas, the integrity of the structure shall be maintained.

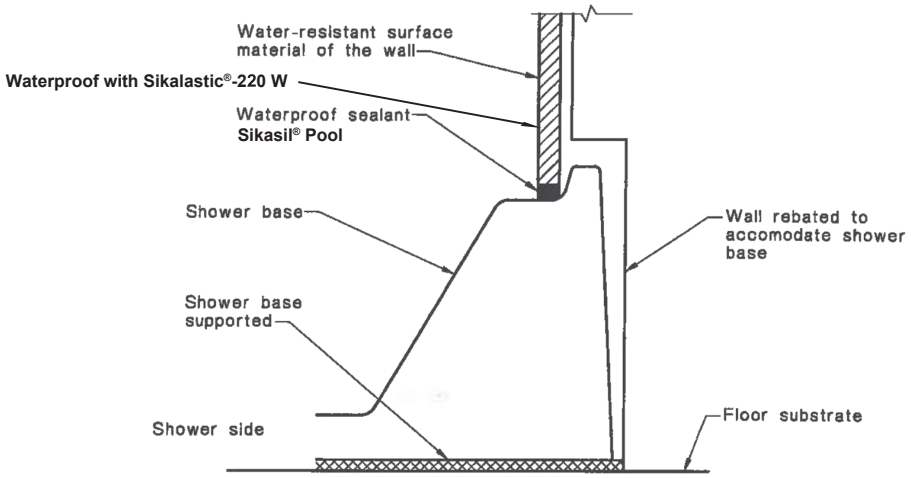

(a) Typical preformed shower base wall/floor junction

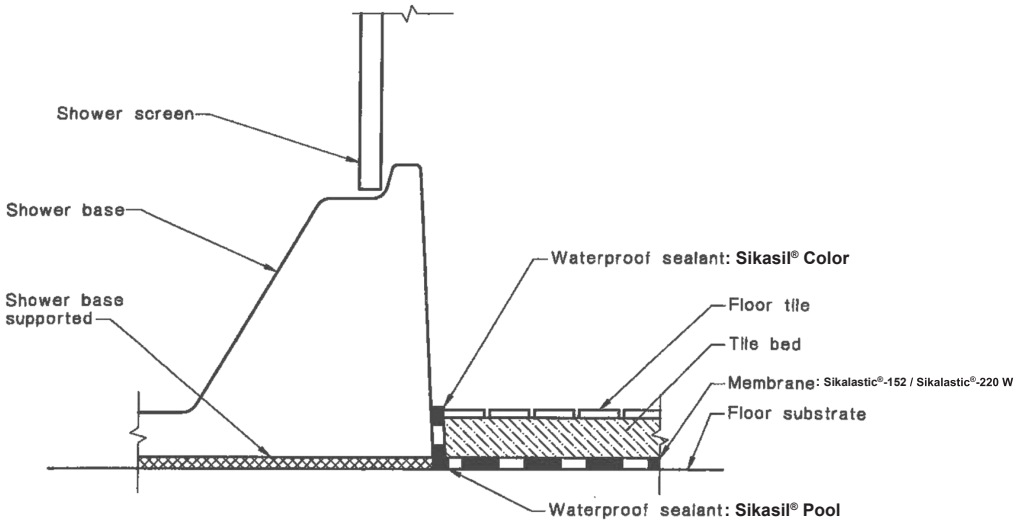

(b) Typical preformed shower base/floor junction on timber floors, including particleboard, plywood and other timber materials

BUILDING TRUST

TECHNICAL DRAWING

5.2 Typical bath junction.

Drawing details for internal wet areas per AS 3740 - 2004.

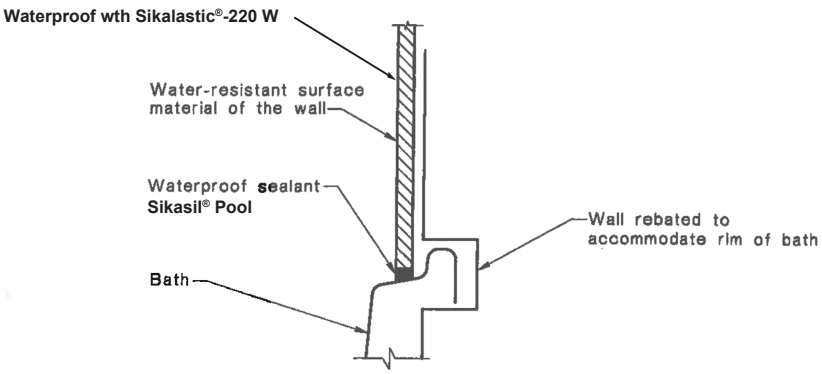

(a) Bath/shelf junction-recessed

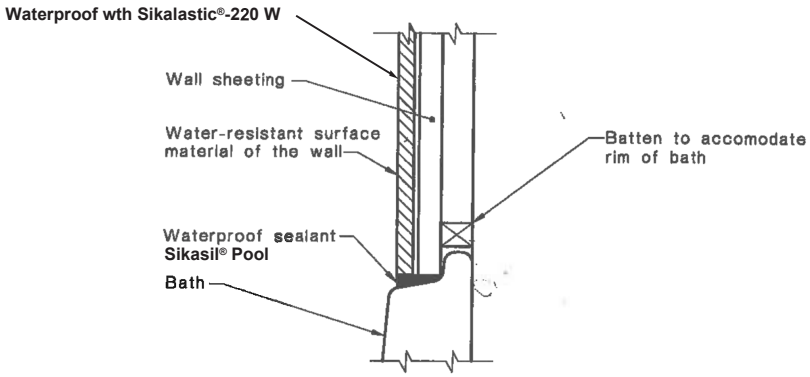

(b) Bath/shelf junction-battened

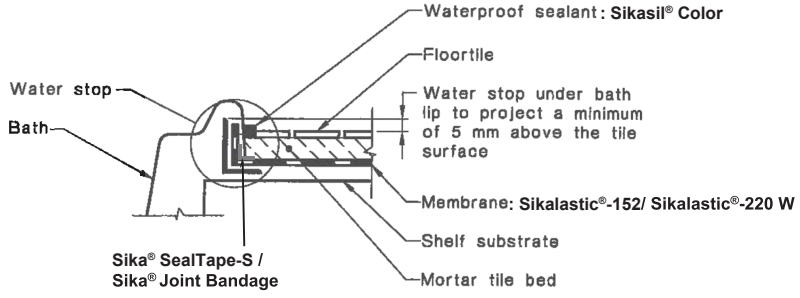

(c) Bath/shelf junction

BUILDING TRUST

TECHNICAL DRAWING

5.3 Typical bathroom door detail for whole bathroom waterproofing.

Drawing details for internal wet areas per AS 3740 - 2004.

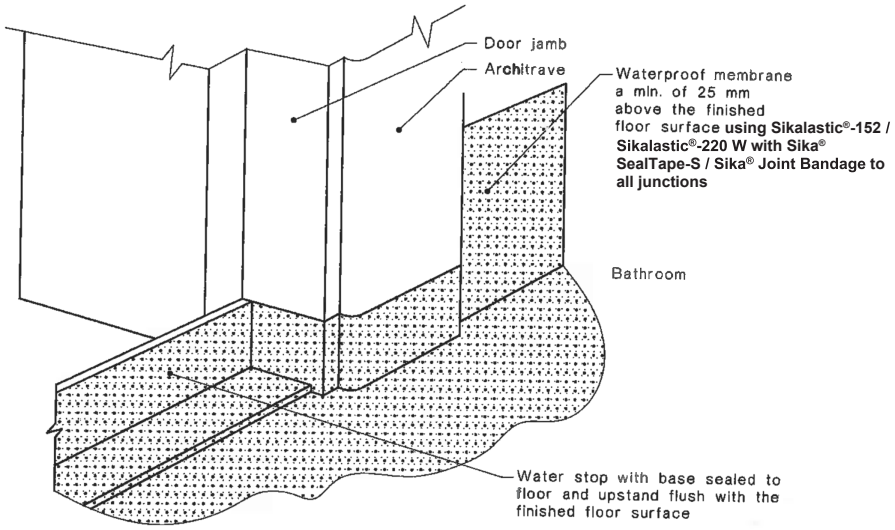

(a) After installation of architrave

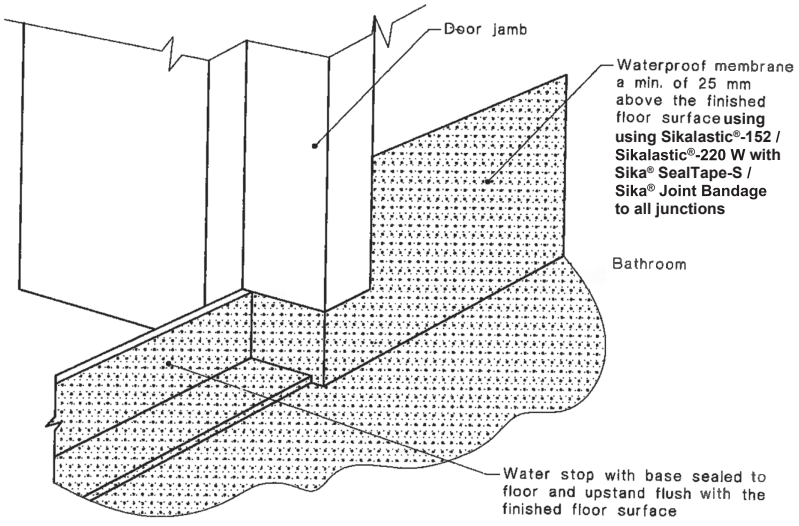

(b) Prior to installation of architrave

BUILDING TRUST

PRODUCT DATA SHEET

Sika BlackSeal Plus (NZ)

LIQUID APPLIED BITUMEN WATERPROOFING MEMBRANE

DESCRIPTION

Sika BlackSeal Plus (NZ) is a bitumen based below ground waterproofing membrane.

USES

Sika BlackSeal Plus (NZ) has been formulated for use as a waterproof membrane behind retaining walls and as a damp-proof membrane for buried faces of basement structures. Sika BlackSeal Plus (NZ) will cover concrete, concrete block, brickwork and wood.

CHARACTERISTICS / ADVANTAGES

- Sika BlackSeal Plus (NZ) has been tested by BRANZ; Sika BlackSeal Plus (NZ) exceeds the vapour flow resistance level requirements for a water vapour barrier as per E2/AS1 - Table 23. (Report No.: DC1454#1, Issued: 9 May 2007, Review date: Indefinite.)
- Fast cure
- Simple to apply by brush, roller or spray
- Excellent adhesion to concrete, masonry, etc.
- Low water permeability
- Can be applied to green concrete
- Resistant to sulphates and ground salts

APPROVALS / STANDARDS

Meets moisture vapour permeability requirements of NZS 3604:2011.

PRODUCT INFORMATION

Packaging	4 litre and 20 litre pails
Colour	Black
Shelf Life	Twelve (12) months when stored as stated.
Storage Conditions	Store in original containers in a dry place below +35°C and away from frost.
Density	1.00 kg/l
Solid content by weight	60%

APPLICATION INFORMATION

Consumption	Minimum total application rate is 1litre per m² (in addition to the primer coat). Ideally this should be applied as two full undiluted coats at a coverage rate of approximately 2m²/ litre / coat, depending on the nature of the surface being treated.
Ambient Air Temperature	+5°C to +50°C
Curing Time	Allow each coat to dry 12-24 hours before recoating.
Drying Time	4 to 6 hours at +20°C. (12-24 hours should be left between coatings.)

APPLICATION INSTRUCTIONS

SUBSTRATE PREPARATION

- Clean down surface to be treated removing all dust, grease, laitance and foreign matter.
- Remove any form release agent residues and curing compounds by high pressure waterblasting, grit blasting or mechanical wire brushing.
- Grind back smooth any dags or ridges. Any surface irregularities should be filled using Sika MonoTop repair mortars or Sikadur-41 epoxy repair mortar.
- Lightly dampen surface to be treated with water, but ensure that no free water remains.
- Stir Sika BlackSeal Plus (NZ) thoroughly before use.

CONTROL JOINTS:
Movement control joints in concrete or concrete masonry should be sealed with Sika BlackSeal®-1 prior to applying the Sika BlackSeal Plus (NZ). Refer to the Sika BlackSeal®-1 data sheet for details on joint sizes and application methods. For high movement joints refer to the Sika technical department.

APPLICATION METHOD / TOOLS

PRIMING:
Porous surfaces: A primer coat of 1 part clean water to 1 part Sika BlackSeal Plus (NZ) should be used. Add water slowly and mix thoroughly.

APPLICATION:
- Stir thoroughly before use.
- Do not apply in temperatures below 5°C or above 50°C.
- Do not apply to exposed surfaces when rain is imminent.
- Apply Sika BlackSeal Plus (NZ) with a coarse whitewash brush or broom. Soak brushes in water before use and periodically during application. Large flat areas may be applied by roller or squeegee.
- Apply two full undiluted coats of Sika BlackSeal Plus (NZ).
- Allow each coat to dry 12-24 hours before re-coating.
- Protect immediately after curing by using a suitable protection sheet such as Sika BlackSeal® Protection Sheet for walls and by using a cement screed or fibre cement board for floors.
- In floors as a sandwich membrane, blind the final coat with sand to reduce damage.

LIMITATIONS

- Sika BlackSeal Plus (NZ) must be protected immediately after curing by using a suitable protection sheet such as Sika BlackSeal® Protection Sheet for walls and by using a cement screed or fibre cement board for floors.
- Do not expose to sunlight.
- Do not overcoat with paints as staining will occur and if exposed to sunlight the paint film will crack.
- Sika BlackSeal Plus (NZ) is recommended for use only as described in the Uses section of this data sheet.

BASIS OF PRODUCT DATA

All technical data stated in this Product Data Sheet are based on laboratory tests. Actual measured data may vary due to circumstances beyond our control.

LOCAL RESTRICTIONS

Please note that as a result of specific local regulations the performance of this product may vary from country to country. Please consult the local Product Data Sheet for the exact description of the application fields.

ECOLOGY HEALTH AND SAFETY

For information and advice on the safe handling, storage and disposal of chemical products, users shall refer to the most recent Safety Data Sheet (SDS) containing physical, ecological, toxicological and other safety-related data.

LEGAL NOTES

The information, and, in particular, the recommendations relating to the application and end-use of Sika products, are given in good faith based on Sika's current knowledge and experience of the products when properly stored, handled and applied under normal conditions in accordance with Sika's recommendations. In practice, the differences in materials, substrates and actual site conditions are such that no warranty in respect of merchantability or of fitness for a particular purpose, nor any liability arising out of any legal relationship whatsoever, can be inferred either from this information, or from any written recommendations, or from any other advice offered. The user of the product must test the product's suitability for the intended application and purpose. Sika reserves the right to change the properties of its products. The proprietary rights of third parties must be observed. All orders are accepted subject to our current terms of sale and delivery. Users must always refer to the most recent issue of the local Product Data Sheet for the product concerned, copies of which will be supplied on request. It may be necessary to adapt the above disclaimer to specific local laws and regulations. Any changes to this disclaimer may only be implemented with permission of Sika® Corporate Legal in Baar.

Sika (NZ) Limited
85-91 Patiki Road
Avondale, Auckland 1026
New Zealand
0800 745 269
www.sika.co.nz

Product Technical Statement

PO Box 18071, Glen Innes
Auckland 1743, New Zealand
Freephone 0800 244 737
Fax 0800 766 324
www.gerardroofs.co.nz

Gerard Roofs Pressed Steel Tiles

Statement of Building Code Compliance

This system if designed, used, installed and maintained in accordance with the supporting technical information and additional conditions and limitations will meet the following provisions of the New Zealand Building Code:

- B1 Structure
- B2 Durability
- E1 Surface Water
- E2 External Moisture

Evidence Base to Support Compliance

This system has the following evidence to support the above solution type declaration:

- Independent technical opinion
- In-house technical opinion
- Independent testing
- In-house testing
- Industry-based scheme
- Historical proof of performance

B1, B2, E1 & E2 reference NZ Metal Roofing & Wall Cladding Manufacturers Code of Practice. Section 10 relates to Pressed Metal Roofing Tiles.

Compliance with NZS4217 Pressed Metal Tile Roofs

Aluminium-zinc coated steel complies with AS1397, not NZS3441 as prescribed in NZS4217. We are also comfortable that we meet the requirements of B2 based on the In-service History Evaluation allowed under B2/VM1. At two severe marine testing sites we have roofs which are in good condition after 23 and 36 years respectively. Evaluations continue on other roofs which are in excess of 30 years.

Copyright © AHI Roofing Ltd ***November 2018. V3***

Scope of Use

Buildings that comply with NZS3604 with a minimum roof pitch which is profile dependent of between 12 and 20 degrees.

Environmental Conditions

This system is code-compliant for the following environmental conditions:

- Wind Zone - Specific Design
- Corrosion Zone - Sea Spray Extreme
- Seismic Zone - High

Specific design can allow higher wind speeds - batten rafter connections are the limitation.

Installation Conditions

This system is code-compliant on the condition that it has been installed by:

- Licensed Applicator / Installer

Additional Conditions & Limitations

A warranty for the system is supplied with 50 year pro-rated duration.

Material Compatibility with Modern Roofing Materials

If alterations are made to the home after the installation of the roof, such as fitting of chimneys, extensions, installation of skylights, etc., it is important to ensure that the materials that are used are compatible with the roofing material. Gerard Roofs' steel tiles are manufactured from 55% aluminium-zinc coated steel and then post coated with a protective and decorative coating system.

Copyright © AHI Roofing Ltd ***November 2018. V3***

Dissimilar Metal Corrosion

When two different metals are in contact and moisture is present, one metal is relatively protected while the other suffers accelerated corrosion. A similar effect commonly occurs with water flowing over dissimilar metals. This form of corrosion is commonly found where:

- Water is discharged from copper or brass systems over a galvanised or 55% aluminium-zinc coated steel roof
- Unpainted lead flashings are applied directly to 55% aluminium-zinc coated steel products, or
- Where fasteners are incompatible with the roofing material

Any electrical contact between dissimilar metals should be avoided.

Consenting Instructions

Where Gerard Roof Tiles are specified on plans these must be installed by a trained installer. Substitution is not allowed.

Critical Maintenance

As detailed in our warranty: "It is best to chemically clean the roof before growths are seen as a preventative maintenance measure. Spores may be present on the roof for up to two years before any visible organic growths are noticed. Treating the roof will not only kill the organic growths, but also the spores that lead to them. We suggest treating the roof every three to five years, however if you see growth occurring treat the roof more frequently."

Copyright © AHI Roofing Ltd ***November 2018. V3***

Dektite Aluminium

The best solution for stone chip and pressed metal tiles

- ✔ The base is 99.9% pure grade aluminium making it strong, malleable and easy to install.
- ✔ Environmentally friendly, ideal where potable water is collected.
- ✔ The best solution for stone chip and pressed metal tiles.
- ✔ EPDM withstands temperatures from -50°C to 115°C and up to 150°C intermittently.

Code	Base (mm)	Pipe (mm)	Pitch
TFA 12-70	500 x 600	12-70	0-45°
TFA 50-170	600 x 600	50-170	0-45°
TFA 110-200	764 x 764	110-200	0-45°
TFA 160-300	600 X 900	160-300	0-45°
TFA 300-450	965 x 965	300-450	0-45°

Installation Instructions:

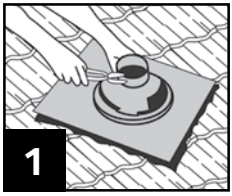

Trim Dektite cone to suit pipe size using sharp tin snips.

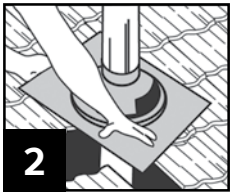

After lubricating the flue with water, slide Dektite down to the tile level.

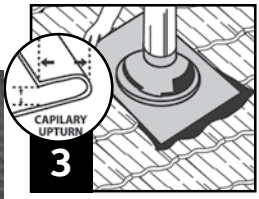

Form an anti-capillary fold then place upper edge of base under up-stream tiles.

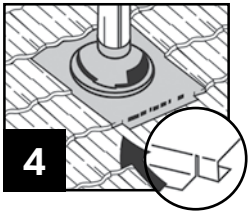

Dress base to profile, cut tabs on the bottom corners and fold under to stop wind lift .

CERTIFICATE OF CONFORMITY

This is to certify that

MASONS
Designed Smart, Built Tough.

CertMark International

40 Below Window Tape & Masons Butyl Tape

Complies with the New Zealand Building Code:

1. B2.3.1(b)
2. B2.3.2
3. E2.3.2
4. F2.3.1

Product Description

40 Below Window Tape & Masons Butyl Tape is a self-adhesive flashing tape to seal around windows, doors, and other joinery openings as a secondary defence against water penetration.

Roll Sizes

W 75mm x L 20m
W 100mm x L 20m
W 150mm x L 20m
W 150mm x L 10m
W 200mm x L 20m

Certificate Holder

Masons Plastabrick Ltd
18A David McCathie Place
Silverdale, Auckland NZ 0944
Ph: 0800 522 533
W: www.mpb.co.nz

Certification Body

CertMark International Pty Ltd
ABN: 80 111 217 568
JAS-ANZ Accreditation No. Z4450210AK
PO Box 321 Tuakau 2121
+64 (09) 951 8246
www.CertMark.org

Product Purpose or Use

40 Below Window Tape & Masons Butyl Tape is a self-adhered, flashing tape designed to protect windows penetrations from moisture infiltration. When integrated into the wall system and used properly, the tape will provide a secondary defence against water penetrating. 40 Below Window Tape can also be used as a Rigid Air Barrier Tape.

Subject to the following Conditions & Limitations:

a. 40 Below can be applied in temperature ranges of between -40c to +65c.
b. Ensure all surfaces to which 40 Below Window Tape & Masons Butyl Tape is applied are clean, dry and free of dust.
c. 40 Below Window Tape & Masons Butyl Tape is to be applied only in areas as decribed in the Masons 40 Below Window Tape Installation Instruction April 2014 and on the packaging. It should not be used in areas where it has the potential to be exposed to heat such as chimney flues.
d. When applying 40 Below Window Tape or Masons Butyl Tape to LOSP treated timber, ensure the solvent has been allowed to flash off prior to installing the product. It is suggested that a minimum of one (1) week is allowed for.
e. 40 Below Window Tape & Masons Butyl Tape when used, installed and maintained in accordance with the requirements outlined in 40 Below Window Tape technical brochure April 2014, contributes to the requirements of Acceptable Solution E2/AS1, Clause 9.1.5 (b) (i).
f. Information contained herein or related hereto is intended only for evaluation by technically skilled persons, with any use thereof to be at their independent discretion and risk. Such information is believed to be reliable, but CertMark International (CMI) shall have no responsibility or liability for results obtained or damages resulting from such use. CMI grants no license under, and shall have no responsibility or liability for infringement of, any patent or other proprietary right. Nothing in this document should be construed as a warranty or guarantee by CMI, and the only applicable warranties will be those provided by the Certificate Holder.
g. The certificate holder must maintain compliance with the conditions set out in Section 15 of the Building (Product Certification) Regulations 2008.

John Thorpe
CertMark International Pty Ltd

11/05/2018
Date of Issue

CM40098-I01-R02
Certificate Number

- This certificate is issued by an independent certification body accredited by the product certification accreditation body appointed by the Chief Executive of the Ministry of Business, Innovation & Employment (MBIE) under the Building Act 2004. MBIE does not in any way warrant, guarantee, or represent that the building method or product the subject of this certificate conforms to the New Zealand Building Code, nor accept any liability arising out of the use of the building method or product. MBIE disclaims, to the extent permitted by law, all liability (including negligence) for claims of losses, expenses, damages, and costs arising as a result of the use of the building method(s) or product(s) referred to in this certificate
- It is advised to check that this Certificate of Conformity is currently valid and not withdrawn, suspended or superseded by a later issue by referring to the MBIE website, www.mbie.govt.nz
- This certificate may only be reproduced in its entirety.

MINISTRY OF BUSINESS, INNOVATION & EMPLOYMENT
HIKINA WHAKATUTUKI

JAS-ANZ
WWW.JAS-ANZ.ORG/REGISTER

Thermakraft™

THERMAKRAFT215

Thermakraft 215 self-supporting roof and wall underlay is an absorbent, breathable underlay specifically designed for use in Domestic and Commercial buildings. Suitable as a roof and wall underlay with all cladding types, where Fire Retardancy is NOT required.

- ✓ Versatile building Underlay, designed for use in residential and commercial roof and wall applications.
- ✓ Reduces wind entry into wall and roof cavities, improving thermal efficiency of bulk insulation. Can be used as a vapour control layer, and improve thermal performance if installed and taped on the warm side of bulk insulation.
- ✓ High water resistance provides for temporary weather protection prior to installation of cladding, and acts as a secondary layer of water protection during its serviceable life.
- ✓ Highly water vapour permeable, allowing excess water vapour that may otherwise condense in the wall structure to escape.
- ✓ Lap line printed.

Self-Supporting

High Water Barrier

Breathable

Absorbent

THERMAKRAFT 215

ROOF

WALL

ROOF AND WALL UNDERLAY

TECHNICAL SPECIFICATIONS

NZBC E2/AS1 ROOF UNDERLAY REQUIREMENTS		
NZBC E2/AS1 TABLE 23 ROOF UNDERLAY PROPERTIES	**PROPERTY PERFORMANCE REQUIREMENTS**	**PROPERTY PERFORMANCE**
Absorbency	≥ 150gsm	Pass
Vapour Resistance	≤ 7 MN.s/g	Pass
pH of Extract	≥ 5.5 and ≤ 8	Pass
Shrinkage	≤ 0.5%	Pass
Water Resistance	≥ 100mm	Pass
NZS2295:2206 CLASSIFICATION		
Flammability Index		Non Fire Retardant
Wind Zone	R2	Up to Very High
NZS2295:2006	R2	Self Support

NOTE:
For wall cavity systems, NZBC Acceptable Solution E2/AS1 Paragraph 9.1.5.5 requires where stud spacing's are greater than 450mm centres, an intermediate means of restraining the building underlay and insulation from bulging into the drained cavity shall be installed. An acceptable means of achieving this is by fixing with Thermakraft Stud Strap horizontally at 300mm centres.

Flammability Index
Thermakraft 215 is not fire retardant.

Roll Dimensions:
1250mm x 20m (25m2)
1250mm x 40m (50m2)
M2 is the roll size for actual coverage, allow for laps and joins.

Thermakraft 215 complies with the requirements of NZBC E2/AS1 Table 23. Is suitable for use in the following:

- With absorbent wall claddings directly fixed to timber and steel framing; and,
- With non-absorbent wall claddings directly fixed to timber and steel framing; and,
- With absorbent and non-absorbent wall claddings installed over an 18mm minimum drained cavity; and,
- With masonry veneer in accordance with NZS 3604; and,
- Situated in NZS3604 Building Wind Zones up to, and including 'Very High' (wall); and,
- As a ROOF underlay Self-supporting when run horizontally at pitches 3° and greater. When run vertically at pitches >3° and <10° degrees, 215 must be supported. Support recommended at very low pitches; and,
- As a roof underlay suitable for use with all Roofing materials; and
- Is suitable as an air barrier in unlined wall spaces.

DURABILITY

For Thermakraft 215 to meet the Performance Requirements of NZBC Clause B2, Durability B2.3.1 (a) 50 years and B2.3.1 (b) 15 years, E2 External Moisture providing:

- Installed in accordance to the Application and Installation Guidelines.
- Run length no greater than 10 meters.
- Is not left exposed for more than (7 days) roof.
- Is not left exposed for more than (28 days) wall.
- When used with LOSP treated timber, inspection must be carried out to ensure that the solvent in the LOSP treated timber has sufficient time to dry out (typically 7 days after the treatment process under the suitable environment conditions).
- Installed by or under guidance of Licensed Building Practitioners.
- Installed in accordance with the Roofing Code of Practice.

For additional details and latest specifications www.thermakraft.co.nz **Customer Service 0800 806 595**

Thermakraft™ THERE IS NO SUBSTITUTE

Thermakraft Ltd 11 Turin Place, East Tamaki, Auckland, New Zealand
P.O.Box 58-112, Botany, Auckland 2163 **Phone** 0800 806 595 or +64 9 273 3727
Fax +64 9 273 3726 **Email** info@thermakraft.co.nz **www.thermakraft.co.nz**

The recommendations contained in Thermakraft's literature are based on good building practice, but are not an exhaustive statement of all relevant information and are subject to any conditions contained in the Warranty. All product dimensions and performance claims are subject to any variation caused by normal manufacturing process and tolerances. Furthermore, as the successful performance of the relevant system depends on numerous factors outside the control of Thermakraft (for example quality of workmanship and design), Thermakraft shall not be liable for the recommendations in that literature and the performance of the Product, including its suitability for any purpose or ability to satisfy the relevant provisions of the Building Code, regulations and standards. Literature subject to change without notification. Latest documentation can be found on the website.

BRANZ Appraised
Appraisal No. 548 [2019]

TEKTON® BUILDING WRAP

Appraisal No. 548 (2019)

This Appraisal replaces BRANZ Appraisal No. 548 (2013)

BRANZ Appraisals

Technical Assessments of products for building and construction.

Marshall Innovations Limited
PO Box 9411
Greerton
Tauranga
Tel: 07 543 0948
Fax: 07 541 1029
Web: www.mwnz.com

BRANZ
1222 Moonshine Rd,
RD1, Porirua 5381
Private Bag 50 908
Porirua 5240,
New Zealand
Tel: 04 237 1170
branz.co.nz

Product

1.1 Tekton® Building Wrap is a synthetic breather-type flexible wall underlay and air barrier for use under direct and non-direct fixed wall cladding on timber and steel framed buildings. The product is manufactured of a coated spun-bonded polypropylene.

Scope

2.1 Tekton® Building Wrap has been appraised for use as a flexible wall underlay on timber framed buildings within the following scope:

- the scope limitations of NZBC Acceptable Solution E2/AS1, Paragraph 1.1 with regards to building height and floor plan area; and,
- with absorbent wall claddings directly fixed to framing; and,
- with absorbent and non-absorbent wall claddings installed over an 18 mm minimum drained cavity; and,
- with masonry veneer in accordance with NZBC Acceptable Solution E2/AS1; and,
- situated in NZS 3604 Wind Zones up to, and including Very High.

2.2 Tekton® Building Wrap has been appraised for use as a flexible wall underlay on steel framed buildings within the following scope:

- the scope limitations of NZBC Acceptable Solution E2/AS1, Paragraph 1.1 with regards to building height and floor plan area; and,
- with absorbent and non-absorbent wall claddings installed over an 18 mm minimum drained cavity; and,
- with masonry veneer subject to specific design; and,
- situated in NZS 3604 Wind Zones up to, and including Very High.

2.3 Tekton® Building Wrap has been appraised for use as a flexible wall underlay over rigid wall underlays on timber and steel framed buildings within the following scope:

- the scope limitations of NZBC Acceptable Solution E2/AS1, Paragraph 1.1 with regards to building height and floor plan area; and,
- with absorbent and non-absorbent wall claddings installed over an 18 mm minimum drained cavity; and,
- with masonry veneer in accordance with NZBC Acceptable Solution E2/AS1 for timber framed buildings or specific design for steel framed buildings; and,
- situated in NZS 3604 Wind Zones up to and including Extra High.

2.4 Tekton® Building Wrap has also been appraised for use on buildings subject to specific weathertightness design. Building designers are responsible for the building design and for the incorporation of Tekton® Building Wrap into their design in accordance with the declared properties and the instructions of Marshall Innovations Limited.

Readers are advised to check the validity of this Appraisal by referring to the Valid Appraisals listing on the BRANZ website, or by contacting BRANZ.

Building Regulations

New Zealand Building Code (NZBC)

3.1 **In the opinion of BRANZ, Tekton® Building Wrap, if used, designed, installed and maintained in accordance with the statements and conditions of this Appraisal, will meet, or contribute to meeting the following provisions of the NZBC:**

Clause B2 DURABILITY: Performance B2.3.1 (a), not less than 50 years, B2.3.1 (b), 15 years and B2.3.2. Tekton® Building Wrap meets these requirements. See Paragraphs 9.1 and 9.2.

Clause E2 EXTERNAL MOISTURE: Performance E2.3.2. When used as part of the cladding system, Tekton® Building Wrap will contribute to meeting this requirement. See Paragraphs 12.1 – 12.3.

Clause F2 HAZARDOUS BUILDING MATERIALS: Performance F2.3.1. Tekton® Building Wrap meets this requirement and will not present a health hazard to people.

Technical Specification

4.1 Tekton® Building Wrap is a 100 g/m^2 light grey sheet polypropylene membrane material approximately 0.6 mm thick.

4.2 The product is supplied in rolls 1.370 m x 37 m and 2.743 m x 37 m. The product is printed with the Tekton® logo repeated along the length of the roll. The rolls are wrapped with an instruction sticker.

Accessories

4.3 Accessories used with Tekton® Building Wrap which are supplied by the installer are:

- Fixings – staples, clouts, screws or proprietary wrap fixings, or other temporary fixings to attach the wall wrap to the framing.
- Wall underlay support – polypropylene strap, 75 mm galvanised mesh or galvanised wire, or vertical cavity battens where required to support the wall wrap in accordance with NZBC Acceptable Solution E2/AS1, Paragraph 9.1.8.5.

Handling and Storage

5.1 Handling and storage of the product, whether on or off site, is under the control of the installer. The rolls must be protected from damage and weather. They must be stored on end, under cover, in clean, dry conditions and must not be crushed.

Technical Literature

6.1 Refer to the Appraisals listing on the BRANZ website for details of the current Technical Literature for Tekton® Building Wrap. The Technical Literature must be read in conjunction with this Appraisal. All aspects of design, use, installation and maintenance contained in the Technical Literature and within the scope of this Appraisal must be followed.

Design Information

Timber and Steel Framing

7.1 Studs must be provided at maximum 600 mm centres. Dwangs must be fitted flush between the studs at maximum 1200 mm centres.

General

7.2 Tekton® Building Wrap is intended for use as an alternative to conventional building papers which are fixed over timber and steel framed walls in order to limit the entry of wind into building cavities, and to act as a secondary barrier to wind-driven rain.

7.3 The material also provides a degree of temporary weather protection during early construction. However, the product will not make the building weathertight and some wetting of the underlying structure is always possible before the building is closed in. Hence, the building must be closed-in and made weatherproof before moisture sensitive materials such as wall or ceiling linings and insulation materials are installed.

Readers are advised to check the validity of this Appraisal by referring to the Valid Appraisals listing on the BRANZ website, or by contacting BRANZ.

7.4 Tekton® Building Wrap must not be exposed to the weather or ultra violet light for a total of more than 60 days before being covered by the wall cladding.

7.5 Tekton® Building Wrap is suitable for use under wall claddings as a wall underlay as called up in NZBC Acceptable Solution E2/AS1, Table 23, except that it must not be used with non-absorbent wall claddings such as vinyl or metal based sidings or weatherboards in direct fixed installations. Tekton® is suitable for use under cavity based wall claddings as a non-absorbent synthetic wall underlay as called up in NZS 2295, Table 2.4 on steel framed buildings. Refer to Table 1.

7.6 Tekton® Building Wrap is also suitable for use as an air barrier to walls that are not lined, such as attic spaces at gable ends, as called up in NZBC Acceptable Solution E2/AS1, Paragraph 9.1.4 (c). Refer to Table 1.

Table 1: NZBC E2/AS1 Table 23 Requirements

NZBC E2/AS1 Table 23 Wall Wrap Properties	**Property Performance Requirement**	**Actual Property Performance**
Absorbency	≥ 100 g/m^2	Classified as non-absorbent (see paragraph 7.5)
Vapour Resistance	≤ 7 MN s/g	Pass
Water Resistance	≥ 20 mm	Pass
pH of Extract	≥ 5.5 and ≤ 8	9.78 *(Note 1)*
Shrinkage	≤ 0.5%	Pass
Mechanical	Edge tear and tensile strength	**Edge tear:** Machine direction = 228 N Cross direction = 186 N **Tensile strength:** Machine direction = 4.4 kN/m Cross direction = 3.9 kN/m
Air Barrier	Air resistance: ≥ 0.1 MN s/m^3	Pass

Note 1: Further testing of Tekton® Building Wrap was completed to determine the effect of the high pH level on the wall underlay and materials it is likely to come into contact with during its serviceable life. The testing confirmed that the high pH had no adverse effects on the wall underlay performance, or the performance of other materials.

7.7 In cavity installations where the cavity battens are installed at greater than 450 mm centres, the wall underlay must be supported between the battens to prevent the wall underlay bulging into the cavity space when bulk insulation is installed in the wall frame cavity in accordance with the requirements of NZBC Acceptable Solution E2/AS1, Paragraph 9.1.8.5.

Stucco Plaster

7.8 Tekton® Building Wrap is suitable for use as a non-rigid backing material for stucco plaster in accordance with the requirements of NZBC Acceptable Solution E2/AS1, Paragraph 9.3.5.1. The wall underlay must be supported with 75 mm galvanised mesh or plastic tape or wire at 150 mm centres run across the cavity battens to limit deflection to a maximum of 5 mm.

7.9 Tekton® Building Wrap may also be used as a slip layer over rigid backings for stucco plaster in accordance with the requirements of NZBC Acceptable Solution E2/AS1, Paragraph 9.3.3.1 (b).

Readers are advised to check the validity of this Appraisal by referring to the Valid Appraisals listing on the BRANZ website, or by contacting BRANZ.

Structure

8.1 Tekton® Building Wrap is suitable for use in all Wind Zones of NZS 3604 up to, and including, Very High when used as a flexible building underlay, and all Wind Zones of NZS 3604 up to, and including, Extra High when used as an overlay for rigid building underlays.

Durability

9.1 Tekton® Building Wrap meets code compliance with NZBC Clause B2.3.1 (a), not less than 50 years for building wraps used where the cladding durability requirement or expected serviceable life is not less than 50 years, and code compliance with NZBC Clause B2.3.1 (b), 15 years for building wraps used where the cladding durability requirement is 15 years.

Serviceable Life

9.2 Provided it is not exposed to the weather or ultra-violet light for a total of more than 60 days, and provided the exterior cladding is maintained in accordance with the cladding manufacturer's instructions and the cladding remains weather resistant, Tekton® Building Wrap is expected to have a serviceable life equal to that of the cladding.

Control of Internal Fire and Smoke Spread

10.1 Tekton® Building Wrap has an AS 1530 Part 2 flammability index of not greater than 5 and therefore meets the requirements of NZBC Acceptable Solutions C/AS2 to C/AS6, Paragraph 4.17.8 b), for the surface finish requirements of suspended flexible fabric used as an underlay to exterior cladding that is exposed to view in occupied spaces. It may therefore be used with no restrictions in all buildings.

Prevention of Fire Occurring

11.1 Separation or protection must be provided to Tekton® Building Wrap from heat sources such as fire places, heating appliances, flues and chimneys. Part 7 of NZBC Acceptable Solutions C/AS1 – C/AS6 and NZBC Verification Method C/VM1 provide methods for separation and protection of combustible materials from heat sources.

External Moisture

12.1 Tekton® Building Wrap must be used behind claddings that meet the requirements of the NZBC, e.g. such as those covered by NZBC Acceptable Solution E2/AS1, or claddings covered by a valid BRANZ Appraisal.

12.2 Tekton® Building Wrap, when installed in accordance with the Technical Literature and this Appraisal, will assist in the total cladding systems compliance with NZBC Clause E2.

12.3 When used as an air barrier, particular care must be taken to ensure an air tight barrier is achieved, and weather sealing at all openings and penetrations through the cladding meets the requirements of the NZBC.

Installation Information

Installation Skill Level Requirements

13.1 Installation must always be carried out in accordance with the Tekton® Building Wrap Technical Literature and this Appraisal by, or under the supervision of, a Licensed Building Practitioner (LBP) with the relevant Licence Class.

Readers are advised to check the validity of this Appraisal by referring to the Valid Appraisals listing on the BRANZ website, or by contacting BRANZ.

Wrap Installation

14.1 Tekton® Building Wrap must be fixed to all framing members at maximum 300 mm centres with hot-dip galvanised, large-head clouts 20 mm long, zinc plated 6-8 mm staples, self-drilling screws, or proprietary wrap fixings. The membrane must be pulled taut over the framing before fixing.

14.2 Tekton® Building Wrap must be run horizontally and must extend from the upper-side of the top plate to the under-side of the bearers or wall plates supporting ground floor joists, or below bottom plates on concrete slabs. Horizontal laps must be no less than 75 mm wide, with the direction of the lap ensuring that water is shed to the outer face of the membrane. End laps must be made over framing and be no less than 150 mm wide.

14.3 The wall underlay should be run over openings and these left covered until windows and doors are ready to be installed. Openings are formed in the membrane by cutting on a 45 degree diagonal from each corner of the penetration. The flaps of the cut membrane must be folded inside the opening and stapled to the penetration framing. Excess wall underlay may be cut off flush with the internal face of the wall frame.

14.4 Tekton® Building Wrap can be added as a second layer over head flashings in accordance with the requirements of NZBC Acceptable Solution E2/AS1, Paragraph 9.1.10.3.

14.5 When fixing the product in windy conditions, care must be taken due to the large sail area created by wide roll widths.

14.6 Any damaged areas of Tekton® Building Wrap, such as tears, holes or gaps around service penetrations, must be repaired. Damaged areas can be repaired by covering with new material lapping the damaged area by at least 150 mm and taping, or by taping small tears.

Inspections

14.7 The Technical Literature must be referred to during the inspection of Tekton® Building Wrap installations.

Basis of Appraisal

The following is a summary of the technical investigations carried out:

Tests

15.1 The following tests have been carried out on Tekton® Building Wrap by Scion: Folding strength of paper in accordance with AS/NZS 1301.423; edge tear resistance and tensile strength in accordance with AS/NZS 4200.1 and air resistance in accordance with BS 6538-3.

15.2 The following tests have been carried out on Tekton® Building Wrap by BRANZ: Absorbency in accordance with AS/NZS 4201.6, Vapour transmission in accordance with ASTM E 96B, Shrinkage in accordance with AS/NZS 4201.3, Water barrier in accordance with AS/NZS 4201.4 and pH of extract in accordance with AS/NZS 1301.421. A range of these tests were completed before and after Tekton® Building Wrap was exposed to ultra-violet light.

15.3 The Flammability Index of Tekton® Building Wrap has been evaluated in accordance with AS 1530.2.

Other Investigations

16.1 A durability opinion was given by BRANZ technical experts.

16.2 Site inspections were carried out by BRANZ to assess methods used for the installation of Tekton® Building Wrap, and to examine completed installations.

16.3 The marketer's Technical Literature, including installation instructions, have been examined by BRANZ and found to be satisfactory.

Readers are advised to check the validity of this Appraisal by referring to the Valid Appraisals listing on the BRANZ website, or by contacting BRANZ.

Quality

17.1 The manufacture of Tekton® Building Wrap has not been examined by BRANZ, but details regarding the quality and composition of the materials used were obtained by BRANZ and found to be satisfactory. BRANZ has taken note of product certification by ICC-ES and CCMC covering quality aspects associated with the product.

17.2 The quality of supply to the market is the responsibility of Marshall Innovations Limited.

17.3 Building designers are responsible for the design of the building, and for the incorporation of the wall wrap into their design in accordance with the instructions of Marshall Innovations Limited.

17.4 Quality of installation is the responsibility of the installer in accordance with the instructions of Marshall Innovations Limited.

Sources of Information

- AS 1530.2 – 1993 Test for flammability of materials.
- AS/NZS 1301.421s: 1998 Determination of the pH value of aqueous extracts of paper, board and pulp – cold extraction method.
- AS/NZS 4200.1: 1994 Pliable building membranes and underlays – materials.
- AS/NZS 4201.1: 1994 Pliable building membranes and underlays – Methods of test – Resistance to dry delamination.
- AS/NZS 4201.2: 1994 Pliable building membranes and underlays – Methods of test – Resistance to wet delamination.
- AS/NZS 4201.3: 1994 Pliable building membranes and underlays – Methods of test – Shrinkage.
- AS/NZS 4201.4: 1994 Pliable building membranes and underlays – Methods of test – Resistance to water penetration.
- AS/NZS 4201.6: 1994 Pliable building membranes and underlays – Methods of test – Surface water absorbency.
- BS 6538.3: 1987 Method for determination of air permeance using the Garley apparatus.
- NZS 2295: 2006 Pliable, Permeable Building Underlays.
- NZS 3604: 2011 Timber-framed buildings.
- Acceptable Solutions and Verification Methods for New Zealand Building Code External Moisture Clause E2, Ministry of Business, Innovation and Employment, Third Edition July 2005 (Amendment 8, 30 November 2018).
- Ministry of Business, Innovation and Employment Record of amendments - Acceptable Solutions, Verification Methods and handbooks.
- The Building Regulations 1992.

Readers are advised to check the validity of this Appraisal by referring to the Valid Appraisals listing on the BRANZ website, or by contacting BRANZ.

BRANZ

In the opinion of BRANZ, Tekton® Building Wrap is fit for purpose and will comply with the Building Code to the extent specified in this Appraisal provided it is used, designed, installed and maintained as set out in this Appraisal.

The Appraisal is issued only to Marshall Innovations Limited, and is valid until further notice, subject to the Conditions of Appraisal.

Conditions of Appraisal

1. This Appraisal:
   a) relates only to the product as described herein;
   b) must be read, considered and used in full together with the Technical Literature;
   c) does not address any Legislation, Regulations, Codes or Standards, not specifically named herein;
   d) is copyright of BRANZ.
2. Marshall Innovations Limited:
   a) continues to have the product reviewed by BRANZ;
   b) shall notify BRANZ of any changes in product specification or quality assurance measures prior to the product being marketed;
   c) abides by the BRANZ Appraisals Services Terms and Conditions;
   d) warrants that the product and the manufacturing process for the product are maintained at or above the standards, levels and quality assessed and found satisfactory by BRANZ pursuant to BRANZ's Appraisal of the product.
3. BRANZ makes no representation or warranty as to:
   a) the nature of individual examples of, batches of, or individual installations of the product, including methods and workmanship;
   b) the presence or absence of any patent or similar rights subsisting in the product or any other product;
   c) any guarantee or warranty offered by Marshall Innovations Limited.
4. Any reference in this Appraisal to any other publication shall be read as a reference to the version of the publication specified in this Appraisal.
5. BRANZ provides no certification, guarantee, indemnity or warranty, to Marshall Innovations Limited or any third party.

For BRANZ

Chelydra Percy
Chief Executive

Date of Issue:
14 June 2019

Readers are advised to check the validity of this Appraisal by referring to the Valid Appraisals listing on the BRANZ website, or by contacting BRANZ.

MASONS
Designed Smart, Built Tough.

Flashing Tape
Installation Instructions

Window Sill Installation Instructions

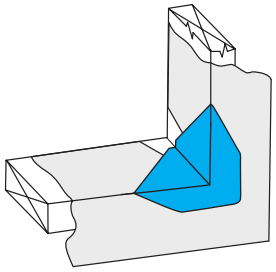

1. Corner Guard *option 1*
Place the *Masons Corner Guard* over the building wrap and into the **bottom** corners of the window or door sill and staple to the jamb. With steel frames use double sided tape to attach the *Corner Guard* to the metal.

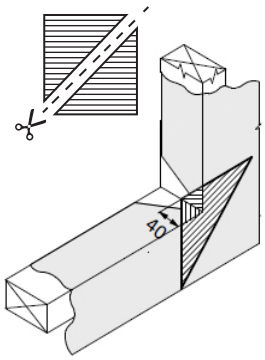

1. Corner Guard *option 2*
Cut a 150mm square of *Flashing Tape* into two equal triangular pieces. Install these at the **bottom** corners of the frame opening. The triangle needs to reach 40mm in from the extreme end of the window sill., with the remainder overlapping the building paper.

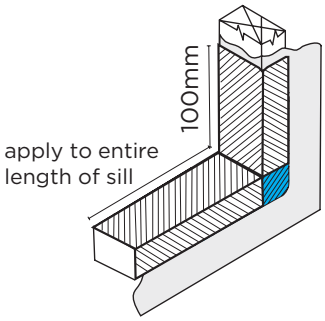

2. Sill Guard

A. Install sill tape flush with the interior face of the opening. Apply along entire length of sill, continue up each jamb with a minimum of 100mm

B. IMPORTANT: Press tape firmly into the corner over the Corner Guard first, then fold around onto the frame face.

C. Fold remainder *Flashing Tape* against outer face of frame/ building. Smooth out all creases & press firmly for good adhesion.

Window Head Installation

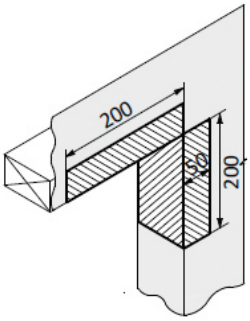

1. Lintel Piece
Install lintel pieces on top corners of opening, 200mm along the lintel and 200mm down the jamb. Slit at each corner and fold onto outer face of building wrap (at least 50mm).

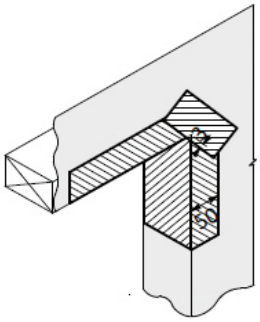

2. Butterflies
To create a seal at corner junction, install butterflies at 45° across the corner of head/jamb.

Window Head Flashing Installation

Apply *Masons Flashing Tape* to top of window head flashing, up-stand and building wrap.
Refer to window & cladding details for specific application.

Cutting Diagram:

Butterflies
2x 75mm x 150mm pieces

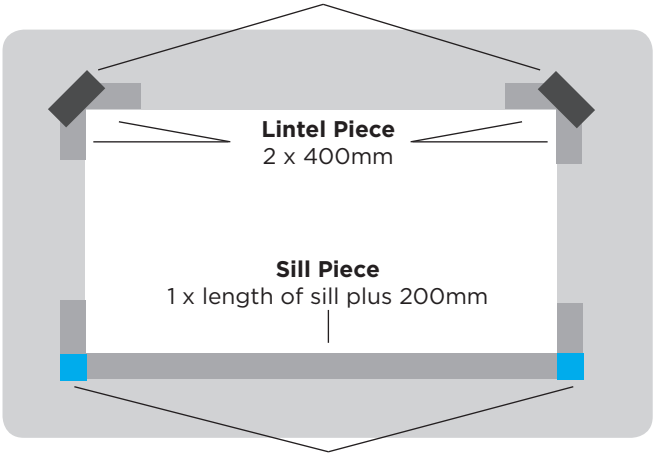

Corner Guards Plastic mould

To ensure maximum adhesion of the tape, make sure the substrate surface is clean, dry and free from any dust or other contaminants.

SISALATION
The Original and The Best

WALL

PRODUCT DATA SHEET

Malthoid® Damp Proof Course

Application

Malthoid® Damp Proof Course (DPC) is a 2 ply felt material impregnated with bitumen and coated with fine sand. It is recommended for use as a moisture barrier between building elements. It can be used as a vapour barrier for structural elements in contact or close proximity with the ground when installed as per the instructions below.

Suitable for use as a;

- Moisture barrier under bottom plates
- Moisture barrier between timber jack studs and timber piles
- Moisture barrier between any wooden surface and concrete, masonry or aluminium

Features and Benefits

- Flexible for quick and easy installation
- Fine sand applied to both surfaces to reduce sticking

Technical Data

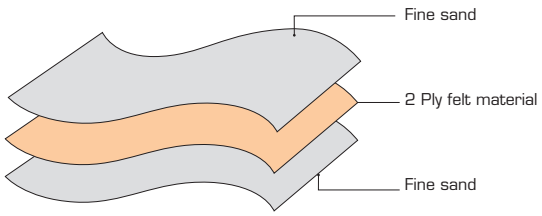

NZBC E2/AS1 Table 23 Classification	Requirement	Performance
Water Vapour Resistance (ASTM E96)	≥ 90 MN s/g	Pass

New Zealand Building Code (NZBC) and Limitations

When used, installed and maintained in accordance with the requirements outlined in this datasheet, will meet or contribute to meeting the following provisions of the NZBC:

NZBC Clause E2: *External Moisture*
Malthoid® Damp Proof-Course satisfies the requirements of NZBC E2/AS1 Table 23, NZS 3604 2.3.3[b].

NZBC Clause B2: *Durability*
Malthoid® will meet the durability requirements of NZBC B2/AS1 Table 1- Damp Proof Course, provided the product is used and installed correctly. Malthoid® must not be used in situations where it will be exposed long-term to sunlight, or prolonged contact with chemicals and solvents.

Limitations

To meet the above Malthoid® must be:

- Installed as specified in this data sheet
- Kept dry at all times and not allowed to remain wet during construction or in service
- Must not be used for head flashings as the bottom edge is normally exposed
- Must not be used around flues and chimneys as a flashing or a damp proof course

SISALATION
The Original and The Best

Installation

General

- Ensure all surfaces are flat and smooth. Remove all loose debris, such as stones, that could puncture the membrane.
- Roll out and cut Malthoid® along the face of the timber using a sharp knife.
- Malthoid® can be temporarily held in place on timber framing using hot dip galvanised clouts or staples before framing is stood up. Ensure Malthoid® extends at least 6mm beyond each face of the timber.
- When used under timber plates fixed over concrete floor slabs and foundation walls small slits should be made before Malthoid® is pushed over the bolts or fixings.

Prenailed Frames

- When intended for use beneath bottom plates of prenailed wall frames erected on concrete floor slabs, it is recommended that the pre-nailer be encouraged to fix it in place to the underside of the bottom plate before the frames leave the factory.

Specification Notes

Product required: Sisalation® Malthoid® Damp Proof Course

Product Specification

Description	Product Code	Roll Length (Nominal ±5mm)	Area	GSM
Malthoid®	788750	50mm x 20m	9 Rolls/pack	1750
Malthoid®	788775	75mm x 20m	6 Rolls/pack	1750
Malthoid®	788790	90mm x 20m	5 Rolls/pack	1750
Malthoid®	788700	100mm x 20m	4 Rolls/pack	1750
Malthoid®	788715	150mm x 20m	3 Rolls/pack	1750
Malthoid®	788720	200mm x 20m	2 Rolls/pack	1750
Malthoid®	788730	300mm x 20m	2 Rolls/pack	1750

Storage

Sisalation® Malthoid® DPC must be protected against damage and weather. Rolls must be stored on end, under cover in a clean, dry environment. Product must be protected from sharp objects.

WALL

PRODUCT DATA SHEET

TASMAN INSULATION NEW ZEALAND

Distributed by:
Tasman Insulation New Zealand Limited
9-15 Holloway Place, Penrose,
Auckland 1061, New Zealand

(1) This data sheet may have been superseded. Please refer to pinkbatts.co.nz for the most current information. This datasheet supersedes all previous versions. (2) Tasman Insulation New Zealand Ltd retains the right to change specifications without prior notification. (3) Do not use this product for any application not detailed in this data sheet. (4) Recommendations and advice regarding the use of this product are to be taken as a guide only. The purchaser should ascertain the suitability of this product for the particular end-use situation intended and when used in conjunction with other products. (5) Consult Tasman Insulation New Zealand Ltd for further information. (6) All claims about this product are subject to any variation caused by normal manufacturing process and tolerances. (7) The liability of Tasman Insulation New Zealand Ltd and its employees and agents for any errors or omissions in this data sheet or otherwise in relation to the product is limited to the fullest extent permitted by law. Except where the consumer acquires the goods for the purposes of a business, any rights a consumer may have under the Consumer Guarantees Act are not affected. (8) This information is provided without prejudice to Tasman Insulation New Zealand Ltd standard terms and conditions of sale.

Please consider the environment before printing this.

For further information visit pinkbatts.co.nz or call 0800 746 522

LUMBERLOK®

STUD TO TOP PLATE FIXING SCHEDULE

ALTERNATIVE TO TABLE 8.18 NZS 3604:2011

NOTE:

- ★ All fixings are designed to resist vertical loads only. Dead loads include the roof weight and standard ceiling weight of 0.20kPa.
- ★ Refer to Table 8.19 NZS 3604:2011 for nailing schedule to resist lateral loads.
- ★ These fixings assume the correct choice of rafter/truss to top plate connections have been made.
- ★ For gable end walls where the adjacent rafter/truss is located within 1200mm and with a maximum verge overhang of 750mm, select stud to top plate fixing using a loaded dimension of 1.5m.
- ★ All fixings assume top plate thickness of 45mm maximum.
- ★ Wall framing arrangements under girder trusses are not covered in this schedule.
- ★ All timber selections are as per NZS 3604:2011.

LOADED DIMENSION DEFINITION

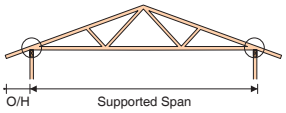

External wall
Standard truss

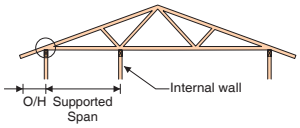

External wall
Internally supported truss

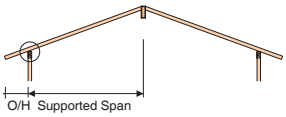

External wall
Rafter roof

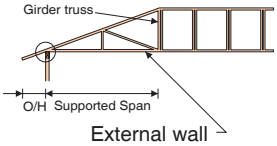

External wall
Jack truss

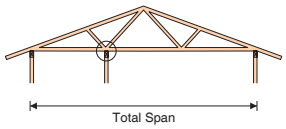

Internal wall
Internally supported truss
(overhang dimension does not apply)

EXTERNAL WALL
LOADED DIMENSION =
$\frac{\text{SUPPORTED SPAN}}{2}$ + O/H

INTERNAL WALL
LOADED DIMENSION =
$\frac{\text{TOTAL SPAN}}{2}$

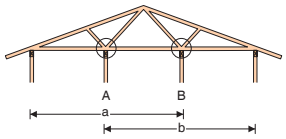

Multiple internal walls
(overhang dimension does not apply)

MULTIPLE INTERNAL WALL
LOADED DIMENSION FOR
WALL A = $\frac{a}{2}$
WALL B = $\frac{b}{2}$

FIXING SELECTION CHART

(Suitable for walls supporting roof members at 600, 900 or 1200mm crs.)
Wind Zones L, M, H, VH, EH, as per NZS 3604:2011

Loaded Dimension (m) Stud Centres			Light Roof Wind Zone					Heavy Roof Wind Zone				
300mm	400mm	600mm	L	M	H	VH	EH	L	M	H	VH	EH
3.0	2.3	1.5	A	A	B	B	B	A	A	B	B	B
4.0	3.0	2.0	A	A	B	B	B	A	A	B	B	B
5.0	3.8	2.5	A	B	B	B	B	A	A	B	B	B
6.0	4.5	3.0	A	B	B	B	B	A	A	B	B	B
7.0	5.3	3.5	A	B	B	B	B	A	A	B	B	B
8.0	6.0	4.0	A	B	B	B	B	A	A	B	B	B
9.0	6.8	4.5	B	B	B	B	B	A	A	B	B	B
10.0	7.5	5.0	B	B	B	B	B	A	A	B	B	B
11.0	8.3	5.5	B	B	B	B	B	A	A	B	B	B
12.0	9.0	6.0	B	B	B	B	B	A	A	B	B	B

FIXING OPTIONS

FIXING TYPE A 0.7kN

2 x 90mm x 3.15 dia. plain steel wire nails driven vertically into stud.

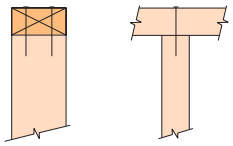

FIXING TYPE B 4.7kN

CHOOSE ANY OF THE 3 OPTIONS BELOW

2 x 90mm x 3.15 dia. plain steel wire nails driven vertically into stud.

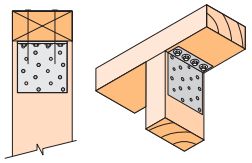

Plus
LUMBERLOK
6kN Stud Anchor
(CPC80)

2 x 90mm x 3.15 dia. plain steel wire nails driven vertically into stud.

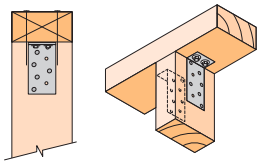

Plus
2 x LUMBERLOK
CPC40

Recommended for internal wall options to avoid lining issues

2 x 90mm x 3.15 dia. plain steel wire nails driven vertically into stud.

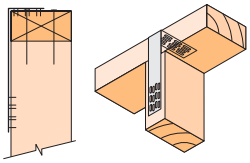

Plus
LUMBERLOK
Stud Strap
(one face only)

NOTE:
To calculate the number of B type fixings required, divide the wall length by the stud centres, add 1 to this figure and locate this number of fixings as evenly as possible along the wall length. This figure includes the start and end studs in each wall length.

SCAN FOR INSTALLATION VIDEO

https://vimeo.com/117353604

MiTek New Zealand Limited

AUCKLAND
PO Box 58-014, Botany 2163
Phone: 09-274 7109
Fax: 09-274 7100

CHRISTCHURCH
PO Box 8387, Riccarton 8440
Phone: 03-348 8691
Fax: 03-348 0314

www.miteknz.co.nz

MiTek®
MITEK® LUMBERLOK® BOWMAC®

© Copyright 2017 MiTek Holdings, Inc.
All rights reserved.

3.3 ECOPLY® BRACING SPECIFICATION - EPI

Table 10: Singled Sided Structural Plywood Brace

Specification No.	Minimum Wall Length	Lining Requirements	BUs/m Wind	BUs/m Earthquake
EP1_0.4	0.4 m	Ecoply one side	80	95
EP1_0.6	0.6 m	Ecoply one side	95	105
EP1_1.2	1.2 m	Ecoply one side	120	135

Framing

Wall framing must comply with:

- NZBC B1 - Structure: AS1 Clause 3 Timber (NZS 3604)
- NZBC B2 - Durability: AS1 Clause 3.2 Timber (NZS 3602)

Framing dimensions and height are as determined by the NZS 3604 stud and top plate tables for load bearing and non load bearing walls. Kiln dried verified structural grade timber must be used. Machine stress graded timber, such as Laserframe® of SG8 stress grade minimum, is recommended.

Bottom plate fixing

Use GIB Handibrac® hold-down connections at each end of the bracing element. Refer to manufacturer installation instructions supplied with the connectors for correct installation instructions and bolt types to be used for either concrete or timber floors. Within the length of the bracing element, bottom plates are fixed in accordance with the requirements of NZS 3604.

Lining

One layer of 7 mm, 9 mm or 12 mm Ecoply plywood fixed directly to framing or over cavity battens. If part sheets are used, ensure nailing at required centres is carried out around the perimeter of each sheet or part sheet. A 2-3 mm expansion gap should be left between sheets.

Fastening the Ecoply® panels

Fasten with 50 x 2.8 mm hot dipped galvanised or stainless steel flat head nails for direct fix, or 60 x 2.8 mm over cavity battens. Place fasteners no less than 7 mm or 3 fastener diameters from sheet edges. Screws cannot be used. Power driven nails are suitable. Do not overdrive, nails must be full round head.

Fasteners for H3.2 CCA treated Ecoply® panels

Where fasteners are in contact with H3.2 CCA treated timber or plywood, fasteners shall be a minimum of hot dip galvanised.

In certain circumstances stainless steel fasteners may be required. Refer to Table 8 of the Ecoply Specification and Installation Guide for these circumstances and further fastener selection advice. Where stainless steel nails are required, annular grooved nails must be used.

Fastening centres

Fasteners are placed at 150 mm centres around the perimeter of each sheet and 300 mm centres to intermediate studs. Where more than one sheet forms the brace element each sheet must be nailed off independently.

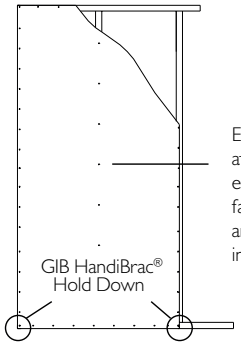

Ecoply® fixed with 50 x 2.8 mm nails at 150 mm centres to perimeter of each sheet at no less than 7 mm or 3 fastener diameters from sheet edge and at 300 mm centres to intermediate studs

Ecoply® Bracing Systems are designed to meet the requirements of the NZBC and have been tested and analysed using the P21 method referenced in NZS 3604:2011 listed as an acceptable solution B1/AS1 Structure. Testing was carried out using Ecoply manufactured by Carter Holt Harvey and SG8 timber framing, and GIB® products manufactured by Winstone Wallboards Ltd. Substituting materials may compromise performance of the system. GIB® and GIB HandiBrac® are registered trade marks of Fletcher Building Holdings Ltd.

SEPTEMBER 2015

Table 11: Ecoply® Suitability For Bracing Applications Including Treatment Type and Fastener Material*

Application	Plywood Treatment	Fastener Material
Plywood bracing in interior spaces with no risk of exposure to weather or moisture penetration conducive to decay (all exposure zones as per section 4 of NZS 3604, including sea spray):	Ecoply Untreated	Hot dipped galvanised or better
Plywood bracing in enclosed spaces (protected from the weather) but with a risk of moisture penetration conducive to decay in exposure zones B & C, as per section 4 of NZS 3604:	Ecoply H3.1 LOSP/H3.2 CCA treated Ecoply Barrier (rigid air barrier)	Hot dipped galvanised or better
Plywood bracing in enclosed spaces (protected from the weather) but with a risk of moisture penetration conducive to decay in exposure zone D (sea spray), as per section 4 of NZS 3604:	Ecoply H3.1 LOSP/H3.2 CCA treated Ecoply Barrier (rigid air barrier)	Stainless steel
Rigid Air Barrier	Refer to Ecoply Barrier Specification & Installation Guide	
Bracing on framing exposed to ground atmosphere in exposure zones B & C, as per section 4 of NZS 3604	Ecoply H3.1 LOSP/H3.2 CCA treated	Hot dipped galvanised or better
Bracing on framing exposed to ground atmosphere in exposure zones D, as per section 4 of NZS 3604	Ecoply H3.1 LOSP/H3.2 CCA treated	Stainless steel
Bracing in wet process buildings in all exposure zones (including sea spray), as per section 4 of NZS 3604	Ecoply H3.1 LOSP/H3.2 CCA treated	Stainless steel

* Refer to Table 8, page 16 of Ecoply Specification & Installation Guide.

Ecoply® Bracing Systems are designed to meet the requirements of the NZBC and have been tested and analysed using the P21 method referenced in NZS 3604:2011 listed as an acceptable solution B1/AS1 Structure. Testing was carried out using Ecoply manufactured by Carter Holt Harvey and SG8 timber framing, and GIB® products manufactured by Winstone Wallboards Ltd. Substituting materials may compromise performance of the system. GIB® and GIB HandiBrac® are registered trade marks of Fletcher Building Holdings Ltd.

SEPTEMBER 2015

3.4 ECOPLY® BRACING SPECIFICATION – EPG

Table 12: Structural Plywood Brace with Plasterboard Other Side

Specification No.	Minimum Wall Length	Lining Requirements	BUs/m Wind	BUs/m Earthquake
EPG_0.4	0.4 m	Ecoply one side and 10 mm GIB® Standard plasterboard other side	100	115
EPG_1.2	1.2 m		150	150

Framing

Wall framing must comply with:

- NZBC B1 - Structure: AS1 Clause 3 Timber (NZS 3604)
- NZBC B2 - Durability: AS1 Clause 3.2 Timber (NZS 3602)

Framing dimensions and height are as determined by the NZS 3604 stud and top plate tables for load bearing and non load bearing walls. Kiln dried verified structural grade timber must be used. Machine stress graded timber, such as Laserframe® of SG8 stress grade minimum, is recommended.

Bottom plate fixing

Use GIB HandiBrac® hold-down connections at each end of the bracing element. Refer to manufacturer installation instructions supplied with the connectors for correct installation instructions and bolt types to be used for either concrete or timber floors. Within the length of the bracing element, bottom plates are fixed in accordance with the requirements of NZS 3604.

Lining

Side 1: One layer of 7 mm, 9 mm or 12 mm Ecoply plywood exterior wall cladding fixed directly to framing or over cavity battens. If part sheets are used, ensure nailing at required centres is carried out around the perimeter of each sheet or part sheet. A 2-3 mm expansion gap should be left between sheets.

Side 2: One layer of 10 or 13 mm GIB® Standard plasterboard vertically or horizontally fixed. Sheet joints are touch fitted and fastener heads and joints stopped in accordance with the GIB® Site Guide.

Fastening the Ecoply® panels

Fasten with 50 x 2.8 mm hot dipped galvanised or stainless steel flat head nails for direct fix, or 60 x 2.8 mm over cavity battens. Place fasteners no less than 7 mm or 3 fastener diameters from sheet edges. Screws cannot be used. Power driven nails are suitable. Do not overdrive, nails must be full round head.

Fasteners for H3.2 CCA treated Ecoply®

Where fasteners are in contact with H3.2 CCA treated timber or plywood, fasteners shall be a minimum of hot dip galvanised. In certain circumstances stainless steel fasteners may be required. Refer to Table 8 of the Ecoply Specification and Installation Guide for these circumstances and further fastener selection advice. Where stainless steel nails are required, annular grooved nails must be used.

Fastening centres

Fasteners are placed at 150 mm centres around the perimeter of each sheet and 300 mm centres to intermediate studs. Where more than one sheet forms the brace element each sheet must be nailed off independently.

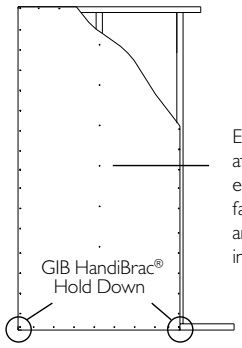

Ecoply® fixed with 50 x 2.8 mm nails at 150 mm centres to perimeter of each sheet at no less than 7 mm or 3 fastener diameters from sheet edge and at 300 mm centres to intermediate studs

Ecoply® Bracing Systems are designed to meet the requirements of the NZBC and have been tested and analysed using the P21 method referenced in NZS 3604:2011 listed as an acceptable solution B1/AS1 Structure. Testing was carried out using Ecoply manufactured by Carter Holt Harvey and SG8 timber framing, and GIB® products manufactured by Winstone Wallboards Ltd. Substituting materials may compromise performance of the system. GIB® and GIB HandiBrac® are registered trade marks of Fletcher Building Holdings Ltd.

SEPTEMBER 2015

Fastening the GIB® Plasterboard

32 mm x 6 g GIB® Grabber® Screws or 35 mm GIB® Nails

Fastening centres

Fasten 50, 100, 150, 225 and 300 mm from each corner and 150 mm thereafter around the perimeter of the bracing element. For vertical fixing place fasteners at 300 mm centres at intermediate sheet joints. For horizontal fixing place single fasteners in the tapered edge where sheets cross studs.

Place fasteners 12 mm from paper bound edges and 18 mm from cut sheet edges. GIB® plasterboard must be treated in every respect in accordance with relevant GIB® literature.

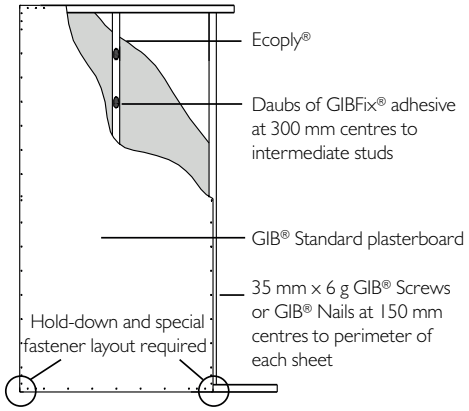

Table 13: Ecoply® Suitability For Bracing Applications Including Treatment Type and Fastener Material*

Application	Plywood Treatment	Fastener Material
Plywood bracing in interior spaces with no risk of exposure to weather or moisture penetration conducive to decay (all exposure zones including sea spray, as per section 4 of NZS3604):	Ecoply Untreated	Hot dipped galvanised or better
Plywood bracing in enclosed spaces (protected from the weather) but with a risk of moisture penetration conducive to decay in exposure zones1 B & C, as per section 4 of NZS 3604:	Ecoply H3.1 LOSP/H3.2 CCA treated Ecoply Barrier (rigid air barrier)	Hot dipped galvanised or better
Plywood bracing in enclosed spaces (protected from the weather) but with a risk of moisture penetration conducive to decay in exposure zone1 D (sea spray), as per section 4 of NZS3604:	Ecoply H3.1 LOSP/H3.2 CCA treated Ecoply Barrier (rigid air barrier)	Stainless steel
Rigid Air Barrier	Refer to Ecoply Barrier Specification & Installation Guide	
Bracing on framing exposed to ground atmosphere in exposure zones B & C, as per section 4 of NZS 3604	Ecoply H3.1 LOSP/H3.2 CCA treated	Hot dipped galvanised or better
Bracing on framing exposed to ground atmosphere in eexposure zone D, as per section 4 of NZS 3604	Ecoply H3.1 LOSP/H3.2 CCA treated	Stainless steel
Bracing in wet process buildings in all exposure zones (including sea spray), as per section 4 of NZS 3604	Ecoply H3.1 LOSP/H3.2 CCA treated	Stainless steel

* Refer to Table 8, page 16 of Ecoply Specification & Installation Guide.

GIB EzyBrace® Systems specification GS1-N

Specification code	Minimum length (m)	Lining requirement
GS1-N	0.4	Any 10mm or 13mm GIB® Standard plasterboard to one side only

WALL FRAMING

Wall framing to comply with;

- NZBC B1 — Structure B1/AS1 Clause 3 Timber (NZS 3604:2011).
- NZBC B2 — Durability B2/AS1 Clause 3.2 Timber (NZS 3602).

Framing dimensions and height as determined by NZS 3604:2011 stud and top plate tables for load bearing and non-bearing walls. The use of kiln dried stress graded timber is recommended.

BOTTOM PLATE FIXING

Timber floor

Pairs of hand driven 100 x 3.75mm nails at 600mm centres; or three power driven 90 x 3.15mm nails at 600mm centres.

Concrete floor

Internal Wall Bracing Lines: In accordance with the requirements of NZS 3604:2011 for internal wall plate fixing or 75 x 3.8mm shot fired fasteners with 16mm discs spaced at 150mm and 300mm from end studs and 600mm centres thereafter.

External Wall Bracing Lines: In accordance with the requirements of NZS 3604:2011 for external wall bottom plate fixing.

WALL LINING

- Any 10mm or 13mm GIB® plasterboard lining.
- Sheets can be fixed vertically or horizontally.
- Sheet joints shall be touch fitted.
- Use full length sheets where possible.

PERMITTED ALTERNATIVES

For permitted GIB® plasterboard alternatives refer to p. 5 in GIB EzyBrace® Systems literature.

FASTENING THE LINING

Fasteners

32mm x 6g GIB® Grabber® High Thread Screws, 32mm x 7g GIB® Grabber® Dual Thread Screws or 30mm GIB® Nails. If using the GIBFix® Angle use only 32mm x 7g GIB® Grabber® Dual Thread Screws.

Fastener centres

50,100,150, 225, 300mm maximum from each corner and 150mm thereafter around the perimeter of the bracing element. For vertically fixed sheets place fasteners at 300mm maximum centres to intermediate sheet joints. For horizontally fixed sheets place single fasteners to the sheet edge where it crosses the stud. Use daubs of GIBFix® adhesive at 300mm maximum centres to intermediate studs. Place fasteners no closer than 12mm from paper bound sheet edges and 18mm from any sheet end or cut edge.

JOINTING

Joint strength is important in delivering bracing system performance. All fastener heads stopped and all sheet joints GIB® Joint Tape reinforced and stopped in accordance with the GIB® Site Guide.

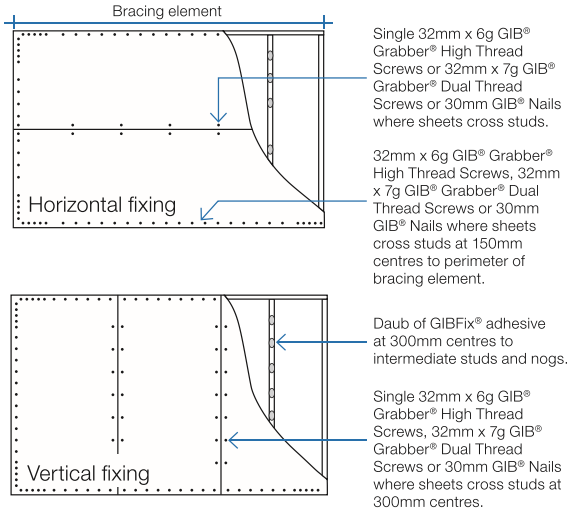

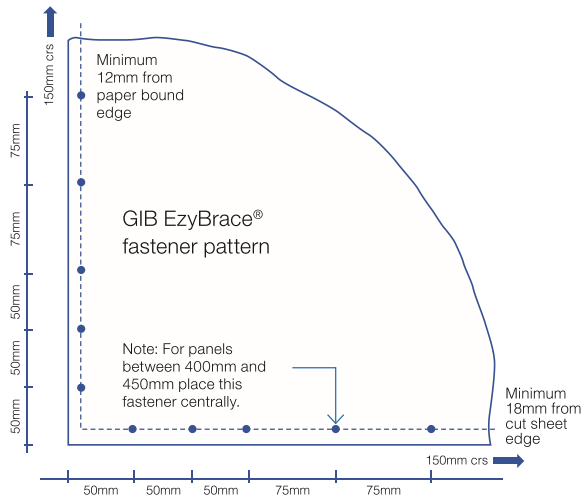

Unless stated all fastener spacings are maximums.

In order for GIB® systems to perform as tested, all components must be installed exactly as prescribed. Substituting components produces an entirely different system and may seriously compromise performance. Follow the specifications. This specification sheet is issued in conjunction with the publication GIB EzyBrace® Systems

Table 7: Water Supply Pipework Support Spacing
Paragraph 7.1.3

Pipe material	Pipe diameter (mm)	Maximum distance between supports (m) Vertical pipe	Graded and horizontal pipe
Copper	10 – 15	1.5	1.2
	20 – 25	2.0	1.5
Galvanised steel	15 – 20	2.0	1.5
	25	3.0	2.5
uPVC	15 – 20	2.0	1.0
	25	2.4	1.2
Polyethylene and polybutylene (cold water supply)	15 – 20	1.5	0.75
	25	1.8	0.9
Polybutylene (hot water supply)	15 – 18	1.0	0.6
	20 – 22	1.4	0.7

Note:
The spacing for these pipe materials is based on the pipes being located within the *building* structure.

Amend 5 Feb 2004

6.14.4 The water temperatures within flow and return circulating systems shall be maintained at not less than 60°C.

COMMENT:
Alternative methods of controlling Legionella within hot water circulating or warm water systems may include chlorine disinfection, UV sterilisation, high temperature pasteurisation combined with system flushing as part of a documented maintenance programme.

Third Edition Dec 2007

7.0 Installation Methods

7.0.1 *Water supply systems* shall be installed to comply with the durability requirements of NZBC B2.

7.1 Pipe supports

7.1.1 Pipes and their supports shall be electrochemically compatible.

7.1.2 Except where anchor points are necessary, the pipes shall be installed and supported in a manner which permits thermal movement.

7.1.3 Support spacing

Above ground water supply pipework shall be securely supported at centres of no greater than those given in Table 7.

7.1.4 Anchor points

Anchor points shall be provided where:

a) Seal ring joints are used, and

b) The joint is not able to resist the thrust imposed by the water pressure.

7.2 Protection from freezing

7.2.1 Where there is the likelihood of freezing, hot and cold *water supply systems* shall be protected in the following manner:

a) Piping outside of the *building* thermal envelope shall be insulated,

b) Piping buried in the ground shall be insulated or installed below a level affected by freezing, and

c) *Storage water heater vent pipes* shall be insulated (see Figure 17).

7.2.2 In climates where freezing temperatures are likely for a period of greater than 24 hours an expansion control valve is required in addition to *vent pipe* insulation (see Figure 17).

316581F
July 2016

INSTALLATION INSTRUCTIONS
&
OWNERS GUIDE

RHEEM MAINS PRESSURE ELECTRIC HOT WATER HEATERS

Congratulations for choosing a Rheem Water Heater

It is important that you take a few minutes
to read this booklet as it may save you
time and trouble later.
If you require any further information or your
water heater needs to be serviced, please contact the
Rheem Service Department on 0800 657 335,
or the nearest service centre
(look in the Yellow Pages under “Plumbers”)
Or visit www.rheem.co.nz

Important to the Installer

Do not leave this booklet inside the element cover
after installation
Please leave the booklet with the water heater’s owner

IMPORTANT INFORMATION

GENERAL

- The information contained in this manual, and all other information or advice given at any time by Rheem New Zealand Limited in connection with the purchase, installation or use of a Rheem water heater, is given in good faith. Subject to any rights the owner may have under the “Consumer Guarantees Act 1993”, Rheem New Zealand Limited will not be liable to any person for any inaccuracy or omission in the information or advice arising through the fault or negligence of Rheem New Zealand Limited or any other person or through any other cause whatsoever.
- This water heater is not intended to be operated, adjusted or tampered with by young children or infirm persons. Young children should be supervised to ensure they do not play with the water heater.

ABOUT YOUR WATER HEATER

Q. DOES THE WATER QUALITY AFFECT THE WATER HEATER?

A. Your water heater is suitable for most public water supplies, however, some water qualities may have a detrimental effect on it. **If you are in a known harsh water area please refer to page 6**.

Q. HOW HOT SHOULD THE WATER BE?

A. All models (temperature range 60 - 70°C) require an authorised person to make any temperature adjustments. For reasons of safety and economy, we advise the thermostat is adjusted to the lowest setting that meets your needs.

The New Zealand Building Code requires a stored temperature setting of not less than 60°C. A tempering valve set at a maximum of 55°C must be used on domestic wet areas.

Q. HOW DO I KNOW IF THE WATER HEATER IS INSTALLED CORRECTLY?

A. Refer to the installation requirements on page 4.

Q. HOW LONG WILL THE WATER HEATER LAST?

A. There are a number of factors that affect the life of the water heater. These include; the water quality, water pressure, water temperature and the usage pattern, however, your Rheem water heater is supported by a comprehensive warranty (refer to page 7).

The life of the water heater may be extended by arranging for an authorised person to inspect the anode and replace it, if required.

The suggested time after installation when the anode should be inspected is:
Vitreous Enamel 8 years
Optima 10 years

For softened water supplies or in areas of poor water quality, it is recommended the anode be inspected 3 years earlier than shown (refer to "Water Quality" on page 6).

HOW THE WATER HEATER WORKS

SINGLE AND TWIN ELEMENT MODELS

Water stored within the water heater is heated by the electric heating element. The thermostat controls the electricity supply to the heating element so that a constant water temperature is maintained. As the cold water is heated it expands approximately 1/50 of its volume and, as a result, a small amount of water is discharged from the cold water expansion valve.

NON-SIMULTANEOUS ELEMENT MODELS

The two heating elements are wired for non-simultaneous operation, so that only one heating unit can operate at a time. The bottom heating unit is usually connected to an off-peak (overnight) supply and the top heating unit to a continuous supply. **The red link wire must be removed from the terminal block during installation if two separate power supplies are to be used**. Leaving the link in place ensures both elements operate correctly with a single power supply.

The basic operation is as follows: when the water temperature at the top of the water heater has reached the set temperature, the thermostat switches the top element off. This creates a circuit to the bottom heating element by switching the neutral.

SAFETY

On all models, a Temperature and Pressure Relief valve is supplied with each water heater. It can be found inside the front cover and must be mounted on top of the water heater.

Also fitted to the water heater is a thermostat, which incorporates an over-temperature thermal cut-out device.

⚠ ***Warning:*** *The operation of the thermal cut-out indicates a possible dangerous situation. The thermostat and thermal cut-out is to only be adjusted or reset by an authorised service person.*

These safety devices must not be tampered with, or removed, and under no circumstances operate the water heater unless both devices are fitted.

REGULAR CARE

MANUALLY OPERATING THE TEMPERATURE AND PRESSURE RELIEF (TPR) VALVE:

The easing lever (see diagram. 1) on the TPR valve should be operated regularly to remove lime deposits and verify that it is not blocked. **It is very important that you raise and lower the lever gently.**

Warning: *To ensure the relief valve is working correctly, operate the relief valve easing lever at least every six months. Failure to do this may result in the water heater over-pressurising.*

DIAGRAM 1

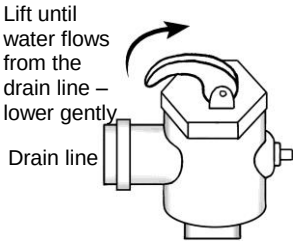

Water Heater

If water does not flow freely from the drain line or the valve fails to completely close and water continues to be discharged, contact the Rheem Service Department, phone **0800 657 335,** or the nearest Rheem Service Centre (look in the Yellow Pages under "Plumbers).

GOING ON HOLIDAYS:

If you plan to be away from home for one or two nights, we suggest that you leave the water heater switched on. However, if you plan to stay away more than a few nights, conserve energy by switching the water heater off at the isolating switch, or at the main switchboard. In locations where freezing could occur, you should leave the water heater turned on.

SAVE A SERVICE CALL

CHECK THE ITEMS BELOW BEFORE MAKING A SERVICE CALL. YOU MAY BE CHARGED FOR SERVICE IF THE FAULT IS NOT RELATED TO THE WATER HEATER MANUFACTURE OR PARTS SUPPLIED WITH THE WATER HEATER BY RHEEM.

WATER DISCHARGING FROM EXPANSION CONTROL VALVES

It is normal for the cold water expansion valve and the temperature and pressure relief valve to discharge a small quantity of water during the heating cycle. If either of these valves discharge more than a bucket full of water in 24 hours, one of the following may be the cause.

- **Continuous dribble**
  Try gently raising the easing lever on the relief valve for a few seconds. This may dislodge small particles of foreign matter and clear the fault.
- **Heavy flow of hot water until the water is cold – then stops while the water reheats**
  Immediately turn off the electricity supply to the water heater. Call the Rheem Service Department or look in the Yellow Pages under "Plumbers" for your nearest Rheem Service Centre or www.rheem.co.nz to arrange an inspection.
- **A steady flow of water (often at night)**
  This may indicate that your cold water pressure sometimes rises above the design pressure of the water heater. A Pressure Limiting valve should be installed, or if one is installed, it may need replacing.

NOT ENOUGH HOT WATER (or no hot water)

- **Is the electricity turned on?**
  Check the switch marked 'water heater' at the switchboard and the water heater isolating switch.
  Check the fuse or circuit breaker marked 'water heater'.

WHERE THE WATER HEATER IS CONNECTED TO AN OFF PEAK (NIGHT RATE) ELECTRICAL TARIFF, THE SUPPLY MAY NOT BE AVAILABLE AT CERTAIN TIMES OF THE DAY.

- **Do you have the correct size heater for your requirements?**
  Refer to the sizing guide in the Rheem sales literature or the Rheem website.
- **Is one outlet (especially the shower) using more hot water than you think?**
  Carefully review the family's hot water usage and if necessary, check the shower flow rate.
  For maximum efficiency we recommend the flow rate through the shower is between 8 to 10 litres per minute (mixed hot and cold). This can be achieved by installing a flow control valve if provision is not made to fit a flow restrictor in the shower rose.
- **Ensure the thermostat setting is appropriate. Note, some models require an authorised person to make electrical thermostat adjustments.**

HIGH ELECTRICITY BILLS

- **Consider recent changes to your hot water usage pattern and check if there has been an increase in tariffs since your previous account.**
- **Is either of the expansion valves discharging too much water?**

- **Is one outlet (especially the shower) using more hot water than you think?**
- **Is there a leaking hot water pipe, dripping hot water tap, etc?**
  Even a small leak will waste a surprisingly large quantity of hot water and energy. Replace faulty tap washers, and have your plumber rectify any leaking pipe-work.

INSTALLATION

Please take careful notice of the advice given as Rheem New Zealand Limited will not be liable for any loss or damage suffered as a result of the incorrect installation of the water heater, or any failure to check the capability of the electrical supply wiring to the water heater.
The water heater must be installed by a certified person or registered plumber and the installation must comply with the New Zealand Building Code, Rheem Installation Instructions, AS/NZS 3000 electrical installations and all local codes and regulatory authority requirements. Note that no warranty costs will be payable where the water heater is located in a position that does not comply with the Rheem water heater installation instructions or relevant statutory requirements, where the unit is installed in a position that does not allow safe or ready access, the cost of that access shall not be payable (refer to "Rheem Warranty" on page 7).

- **WATER HEATER LOCATION**
  Water heaters with a galvanised outer casing are only suitable for indoor installations, whereas water heaters with a painted casing are suitable for both indoor and outdoor installations.
  Clearance must be allowed for servicing and removal of the water heater and it must be accessible without the use of a ladder or scaffold. (Typical clearances are: TPR valve removal 135 mm, Element Cover and Element Removal 400 mm). Also, you must be able to read the information on the rating plate and if possible, leave headroom of one water heater length so the anode can be inspected or replaced.
- **CONNECTION SIZES**
  - Hot and Cold water connections: RP *¾ / 20.*
  - Relief valve connection: RP ½ / 15.
- **INLET/OUTLET CONNECTIONS**
  A union must always be provided at the cold water inlet and hot water outlet for disconnection reasons. All connection sockets on the water heater are parallel threaded and therefore tapered brass nipples must be used to ensure watertight connections. Both connections are fitted with plastic liners and it is important that they remain in situ for the water heater to function properly. These liners will be pushed into the correct position as the fitting is being screwed in.
- **NON RETURN VALVE**
  A non return valve must be installed on the cold water line to the water heater.
- **PIPE SIZES**
  The cold water line to the water heater should be the same size or bigger than the hot water line from the water heater. For best results, choose the most suitable pipe size for each individual application.
- **COLD WATER EXPANSION VALVE**
  A cold water expansion valve must be fitted to the cold water line to the water heater.
- **TEMPERATURE AND PRESSURE RELIEF VALVE**
  When fitting the temperature and pressure relief valve, ensure the probe has not been bent. Seal the thread with PTFE tape, or similar, as recommended by the valve manufacturer and screw the valve into the off-centre socket. Do not use a wrench on the valve body – use the spanner flats provided. Drain the TPR valve with a pipe the same size as the valve outlet. The drain must run downwards to a visible point outside the house, preferably over a gully trap.
  In some setups or circumstances, such as if freezing could occur, an air break must be provided in the drain within 300 mm of the TPR valve, refer to the New Zealand Building Code - Clause G12 for requirements and acceptable solutions for the running of hot water drain line(s).

Warning: The drain line from the TPR valve must be in copper. *A Rheem mains pressure water heater must* ***not*** *be installed and operated without a suitable (valve that complies with AS 1357.1) temperature and pressure relief valve. Under no circumstances block the outlet of this valve or its drain pipe.*

- **WATER SUPPLY PRESSURE**
  Maximum permitted mains water pressure - refer product label and Table 5.2 AS/NZS 3500.4. Note inlet pressure control valve is required where maximum permitted mains pressure is likely to be exceeded.
  Minimum inlet pressure: 60 kPa
- **PRESSURE LIMITING/REDUCING VALVE**
  If the water supply pressure exceeds the requirements of Table 5.2 AS/NZS 3500.4, a pressure limiting valve with a maximum setting of 500 kPa is to be fitted in the installation.
- **SAFE TRAY AND SEISMIC RESTRAINTS**
  The water heater must be installed with a properly drained safe tray where there is the possibility of water damage to furniture, carpets or building. All water heaters must be restrained to protect against seismic forces. (Refer to the Zealand Building Code for acceptable solutions.)

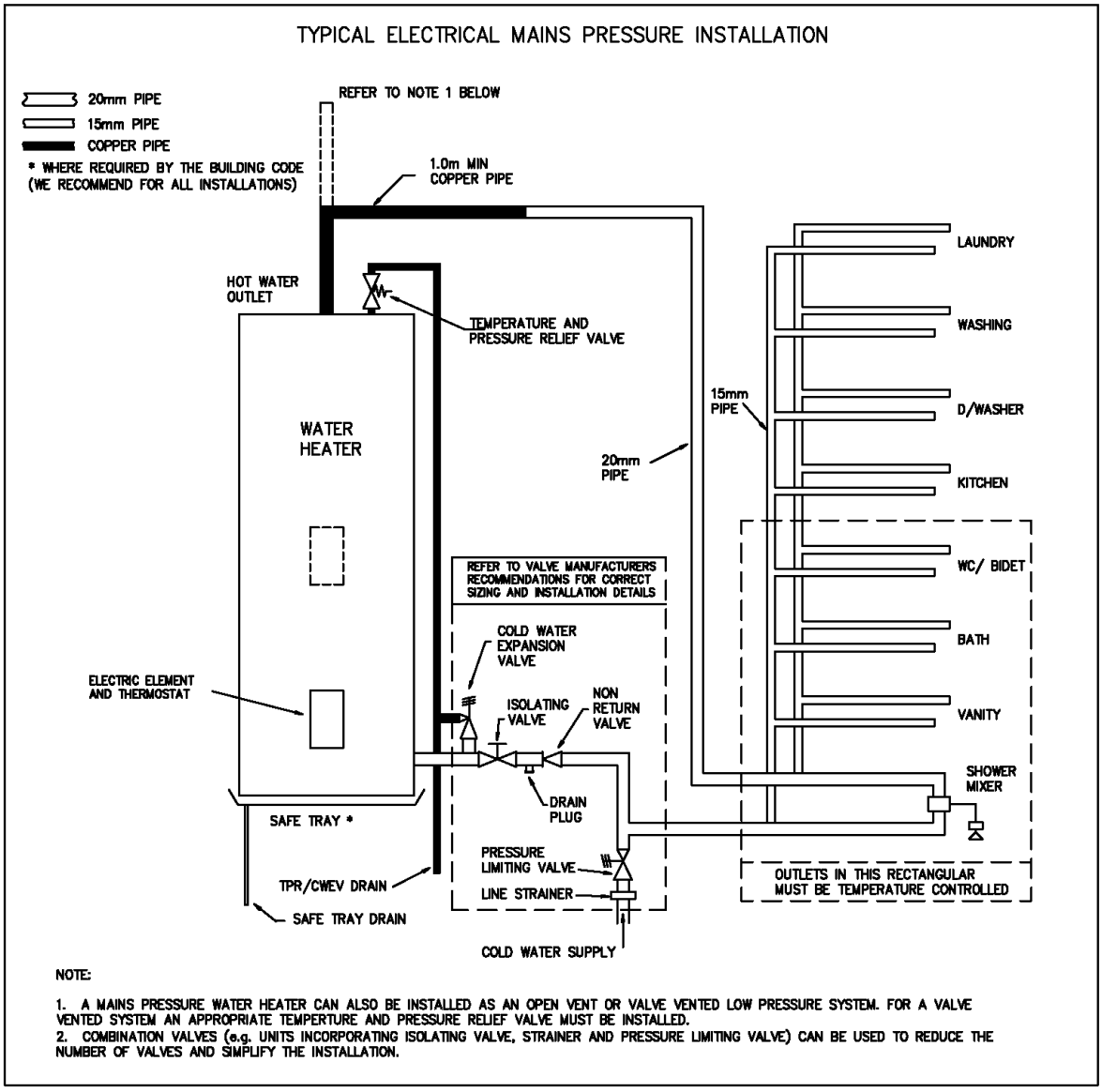

DIAGRAM 2:

CONNECTIONS - ELECTRICAL

The electrical installation must be completed in accordance with AS/NZS 3000. All water heaters are designed for 230 VAC, 50 Hz mains operation and a means of disconnection from the power supply must be incorporated in the fixed wiring during installation.

A flexible 20 mm conduit is required for the electrical cable to the water heater. The conduit is to be connected to the unit with a 20 mm plain to screw adaptor. Connect the power supply wires directly to the terminal block and earth tab connection, ensuring there are no excess wire loops inside the front cover. For details, refer to the wiring diagram on the inside of the element cover. **A separate heating element earth wire is not required because the element earths by the thread of the element boss or the flange being in contact with the element socket.**

COMMISSIONING

TO FILL AND TURN ON THE WATER HEATER

⚠ ***Warning:*** *The power supply to the water heater must not be switched on until the water heater is filled with water and an "earth continuity test", as outlined in Annex A of AS/NZS 60335.1 has been carried out. Failure to do so will damage the element and shorten its life and may create a dangerous situation.*

- Open all of the hot water taps in the house (don't forget the shower). Open the cold water isolation valve fully to the water heater to force the air out of the taps. As water flows freely from each tap, close it. Check the pipe-work for leaks.
- Switch on the electrical supply at the isolating switch to the water heater.

TO TURN OFF THE WATER HEATER

If it is necessary to turn off the water heater on completion of the installation, such as on a building site or where the premises is vacant, then;

- Switch off the electrical supply at the isolating switch to the water heater.
- Close the cold water isolation valve at the inlet to the water heater.

DRAINING THE WATER HEATER

- Switch off the electrical supply at the isolation switch to the water heater.
- Close the cold water isolation valve.
- Operate the relief valve easing lever to release the pressure in the water heater.
- Drain the water heater through the drain valve or plug.
- Undo the top outlet union or operate the relief valve easing lever again to let air into the water heater and allow the water to drain

WHAT YOU SHOULD KNOW ABOUT WATER QUALITY

WATER SUPPLY CHEMISTRY

Water quality can have a detrimental effect on water heater operation, components and life expectancy and may affect the warranty.

⚠ ***Warning****: This water heater must be installed in accordance with advice given to be covered by the Rheem warranty.*

Your Rheem water heater is manufactured to suit the water condition of most local authority water supplies. However, some water supplies can have a detrimental effect on the water heater and its operation and/or life expectancy. This water heater must only be connected to a water supply which complies with these specifications for the Rheem warranty to apply. If you are unsure of your water chemistry you may be able to obtain information from your local water supply authority or you can contact Rheem and we will provide you with contact details of a suitable agency capable of testing your water for compliance with Rheem standards. Water quality tests must be carried out at the owner's cost.

HARSH WATER AREAS

Rheem water heaters are designed for use in areas where the Total Dissolved Solids (TDS) content of the water supply is less than 2500 mg/L.

In areas where the TDS exceeds 600 mg/L it is possible the standard magnesium anode fitted to the water heater, may be excessively active. To alleviate this, the magnesium anode should be replaced with an aluminium anode. Where the TDS of the water is less than 40 mg/L, such as when the water has been deionised or is from an alpine supply, a high potential anode should be used. The changing of anodes must be carried out by a plumber or qualified service person.

CAUTION

If your water supply has a TDS greater than 600 mg/L and the anode has not been changed, there is a possibility of hydrogen gas accumulating in the top of the water heater during long periods of no use.

If, under these conditions, the water heater has not been used for two or more weeks the following procedure should be carried out before using any electrical appliances (e.g. automatic washing machines and dishwashers) which are connected to the hot water supply.

The hydrogen, which is highly flammable, should be vented safely by opening a hot tap and allowing the water to flow. There should be no smoking or naked flames near the tap whilst it is turned on. Any hydrogen gas will be dissipated as indicated by an unusual spurting of the water from the tap. Once the water runs freely again any hydrogen in the system will have been released.

SATURATION INDEX

The saturation index is used as a measure of the water's corrosive or scaling properties. In a scaling water supply calcium carbonate is deposited out of the water onto any hot metallic surface. When scaling water has a saturation index greater than +0.40 an expansion control valve must be fitted on the cold water line after the non-return valve.

Where the saturation index exceeds +0.80, low watts density elements should be used. Where the saturation index is less than -1.0, a corrosive resistant heating unit should be used (contact your local Rheem Service Department or an authorised service person).

Scaling water is water that containing levels of calcium carbonate (total hardness in excess of 200 mg/litre at any time when the water heater is operating) Scaling water can block and prevent the pressure & temperature relief valve from operating, resulting in damage to the water heater storage cylinder and water components. A cold water expansion control valve must be fitted where in all areas with scaling water to assist in preventing blockage of the pressure and temperature relief valve.

⚠ ***Warning:*** *Failure to install an expansion control valve where scaling water conditions occur may result in the water storage cylinder failing or under certain circumstances over pressurising.*

To avoid damage to the storage cylinder and components Rheem strongly recommends scaling water be treated before entering the water heater by fitting appropriate water filters, conditioners, etc – refer to your local water authority for information on water in your area. A build up of white sediment on the hot taps or shower rose can be indicative of scaling water. Contact Rheem if this condition is observed.

Warning: *Damage caused by scaling water can affect the Rheem warranty.*

The Rheem warranty of this water heater will not cover resultant faults on components, including storage tank, due to the effects of sludge and/or sediment as a result of connection to a water supply from silted or untreated sources, i.e. springs, dams, bores, rivers or town supplied from a bore.

WATER HEATERS NOT INSTALLED IN ACCORDANCE WITH THE ABOVE ADVICE WILL NOT BE COVERED BY THE RHEEM WARRANTY.

RHEEM WARRANTY

Mains Pressure Electric Water Heater Product Warranty New Zealand Only

In addition to your legal right, in New Zealand Rheem New Zealand Limited makes the following promise to the owner. We will repair or, if necessary, replace a defective unit or part of it, which has failed due to faulty manufacture on the following terms and conditions:

1. THE RHEEM WARRANTY – GENERAL

1.1 This warranty is given in respect of sales in New Zealand by Rheem New Zealand Limited of 475 Rosebank Road.

1.2 Rheem offer a trained and qualified national service network who will repair or replace components at the address of the unit subject to the terms of the Rheem warranty in New Zealand – contact your Rheem Service Centre on 0800 657 335.

1.3 For details about this warranty, you can contact your Rheem Service Centre in New Zealand on 0800 657 335.

1.4 The terms of this warranty are set out in section 2 and apply to units manufactured after 1st July 2016.

1.5 If a subsequent version of this warranty is published, the terms of that warranty will apply to units manufactured after the date specified in the subsequent version.

2. TERMS OF THE RHEEM WARRANTY AND EXCLUSIONS TO IT

2.1 The decision of whether to repair or replace a faulty component is at Rheem New Zealand Limited's sole discretion.

2.2 Where a failed component or unit is replaced under this warranty, the balance of the original warranty period will remain effective. The replacement does not carry a new Rheem warranty.

2.3 Where the unit is installed outside the boundaries of a metropolitan area, defined by Rheem as further than 25 km from a Rheem service centre, the cost of transport, insurance and travelling between the Rheem service centre and the installed site shall be the owner's responsibility.

2.4 Where the unit is installed in a position that does not allow safe or ready access, the cost of that access, including the cost of additional materials handling and/or safety equipment, shall be the owner's responsibility. In other words, the cost of dismantling or removing cupboards, doors, walls, roofs or trap doors and the cost of any special equipment to bring the unit to floor or ground level or to a serviceable position is not covered by this warranty.

2.5 This warranty only applies to the original and genuine Rheem unit in its original installed location and any genuine Rheem replacement parts. It does not cover any plumbing, gas fitting or electrical parts supplied by the installer, that are not an integral part of the unit, e.g. pipe-work, pressure limiting valve, stop valves, non-return valves, electrical switches, pumps and fuses.

2.6 The Rheem warranty does not cover faults that are a result of:

a) Accidental damage to the unit or any component, for example Acts of God such as floods, storms, fires, lightning strikes and the like and Third party acts or omissions.

b) Misuse or abnormal use of the unit.

c) Installation or use not in accordance with the Owner's Guide and Installation Instructions, New Zealand Building Code requirements or with relevant statutory and local requirements including failure to install a properly drained safe tray where required by the owners guide and installations.

d) Connection at any time to a water supply that does not comply with the water supply guidelines as outlined in the Owner's Guide and Installation Instructions, or poor water quality outside the limits specified in the owners guide and installation instructions.

e) Repairs, attempts to repair or modifications to the unit by a person other than Rheem Service or a Rheem Accredited Service Technician.

f) Faulty plumbing or faulty power supply.

g) Failure to maintain the unit in accordance with the Owner's Guide and Installation Instructions.

h) Transport damage.

i) Fair wear and tear from adverse conditions (for example, corrosion).

j) Cosmetic defects.

2.7 If you require a call out and we find that the fault is not covered by the Rheem warranty, you are responsible for Rheem Service Centre call out costs. If you wish to have the relevant component repaired or replaced by Rheem that service will be at your cost.

2.8 Subject to any statutory provisions to the contrary, this warranty excludes any and all claims however arising including under contract or tort for damage to furniture, carpet, walls, foundations or any other consequential loss or incidental expenses either directly or indirectly due to leakage from Rheem unit, or due to leakage from fittings and/ or pipe work of metal, plastic or other materials caused by water temperature, workmanship or other modes of failure.

2.9 This warranty excludes to the extent permissible all implied warranties set out in the sale of goods act 1908 (New Zealand) and all guarantees set out in the consumers guarantees act 1933 (New Zealand) to the extent that the goods are acquired for the purpose of resupply in trade consumption in the course of a process of production or manufacture or repairing or treating in trade other goods or fixtures on land.

3. WHAT IS COVERED BY THE RHEEM WARRANTY FOR THE UNITS DETAILED IN THIS DOCUMENT

3.1 Rheem will repair or replace a faulty component of your unit if it fails to operate in accordance with its specifications as follows:

Warranty Cover	**The period from date of installation, in which the fault must appear, in order to be covered**		*Domestic use is defined as; when the appliance is installed in a single family domestic dwelling.
What components are covered	**Domestic use***	**Non-domestic use***	**What coverage you receive**
Mains Pressure**	**Years**		**(Excludes Optima)
All components	1	1	Repair or replacement of failed component, or if necessary, replacement of the complete water heater, free of charge, including labour.
Cylinder only	3	1	Repair or replacement of the complete water heater, free of charge, including labour.
Vitreous Enamel - Cylinder only	7	3	Repair or replacement of the complete water heater, free of charge. Installation and labour cost are the responsibility of the owner.
Stainless Steel - Cylinder only	10	3	
Optima	**Years**		
All components	3	1	Repair or replacement of failed component, or if necessary, replacement of the complete water heater, free of charge, including labour.
Cylinder only	5	1	Repair or replacement of the complete water heater, free of charge, including labour.
Cylinder only	10	5	Repair or replacement of the complete water heater, free of charge. Installation and labour cost are the responsibility of the owner.

4. ENTITLEMENT TO MAKE A CLAIM UNDER THIS WARRANTY

4.1 To be entitled to make a claim under this warranty you need to:

a) Be the owner of the unit or have consent of the owner to act on their behalf.

b) Contact Rheem New Zealand Limited Service Department without undue delay after detection of the defect and, in any event, within the applicable warranty period.

c) Return the faulty component or unit as directed by the Rheem New Zealand Limited Service Department.

4.2 You are **not** entitled to make a claim under this warranty if your unit:

a) Does not have its original serial numbers or rating labels.

b) Is not installed in New Zealand.

5. HOW TO MAKE A CLAIM UNDER THIS WARRANTY

5.1 If you wish to make a claim under this warranty, you need to:

a) Contact Rheem New Zealand on 0800 657 335 and provide owner's details, address of the unit, a contact number and date of installation of the unit or if that's unavailable, the date of manufacture and serial number (from the rating label on the unit).

b) A Rheem service centre will arrange for the unit to be tested and assessed on-site.

c) If Rheem determines that you have a valid warranty claim, Rheem will repair or replace the unit in accordance with this warranty.

5.2 Any expenses incurred in the making of a claim under this warranty will be borne by you.

RHEEM SERVICE DEPARTMENT
475 Rosebank Road, Avondale, Auckland

www.rheem.co.nz

FOR SERVICE TELEPHONE
Phone: 0800 657 335
Fax: 09 829 0222
or refer to your local Yellow Pages under "Plumbers"
for your nearest Rheem Service Centre

Figure 13: Bedding and Backfilling
Paragraphs 3.9.2, 3.9.4 and 3.9.5

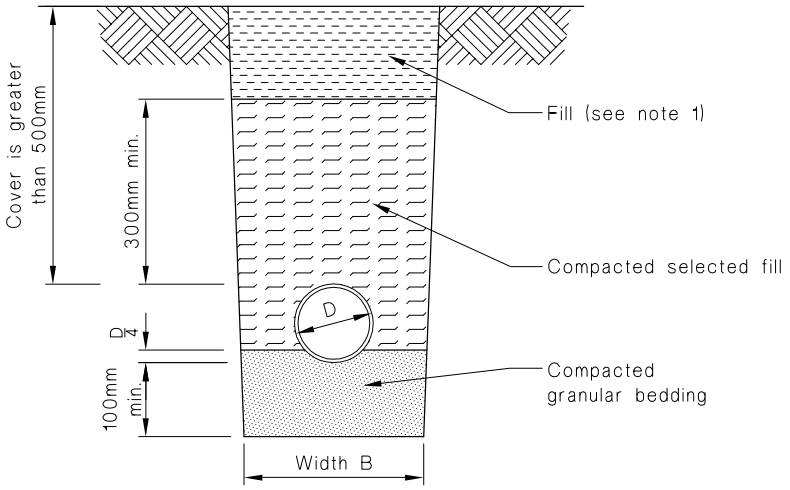

(a) Cover greater than 500 mm
Bedding type 'B' of NZS 4452

Amend 1 Sep 1993

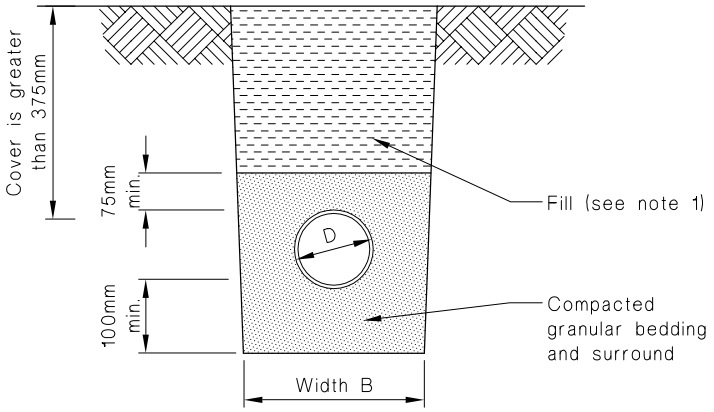

(b) Cover greater than 375 mm
Bedding type 'D' of NZS 4452

Amend 1 Sep 1993

Amend 1 Sep 1993

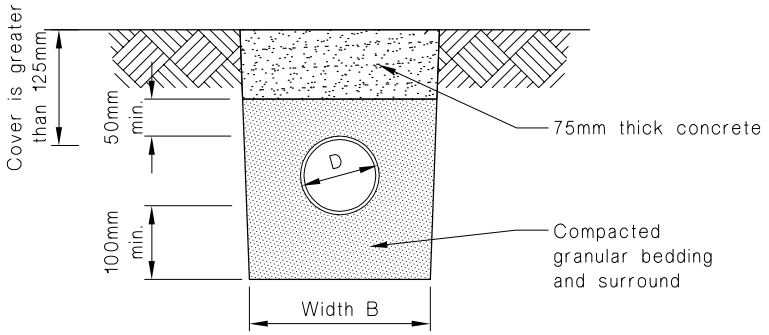

(c) Cover greater than 125 mm

Amend 1 Sep 1993

Amend 1 Sep 1993

NOTE:
1. Fill shall be:
-Ordinary fill where drains are located below gardens and open country.
-Compacted selected fill where the drains are located below residential driveways and similar areas subjected to light traffic.

Technical Data Sheet

BRICKWORKS

Product Range: Basics

Product Name: Karekare | **Size:** 230 × 70 × 76mm | **Manufactured:** Australia

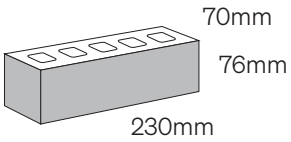

Typical Properties	
Length (mm)	230mm
Width (mm)	70mm
Height (mm)	76mm
Dimensional Category	DW2
Average Weight / Unit (kg)	1.9
Units per Square Metre	48
Pack Size	720
Characteristic Unconfined Compressive Strength (f'uc) MPa	>15
Maximum Cold Water Absorption (%)	<11
Initial Rate of Absorption (IRA) (kg/m^2 min)	1.0 - 4.0
Estimated 15 year Coefficient of Expansion (e'Factor)	<1.0
Core Volume (%)	<25
Liability to Efflorescence	Slight
Lime Pitting Liability	Nil
Solar Absorptance Rating	Light
Light Reflectance Value (LRV)	6.9

This Data represents average results from commercial production lots.
If specific test results are required, sample should be taken from current production lots.
AUSTRALIAN STANDARD TEST METHODS AS/NSZ 4456 ARE USED AS APPLICABLE.
October 2020

austral bricks

BRANZ Appraised
Appraisal No. 928 [2016]

GIB EZYBRACE® SYSTEMS 2016

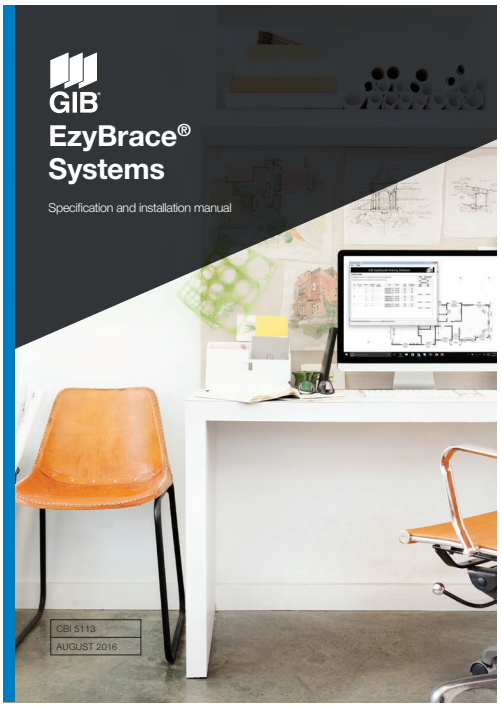

Appraisal No. 928 (2016)

BRANZ Appraisals

Technical Assessments of products for building and construction.

Winstone Wallboards Ltd
P O Box 12 256
Penrose
Auckland 1642
Tel: 09 633 0100
Fax: 09 633 0101
Helpline Tel: 0800 100 442
Helpline Fax: 0800 229 222
Web: www.gib.co.nz
Email: info@gib.co.nz

BRANZ
1222 Moonshine Rd,
RD1, Porirua 5381
Private Bag 50 908
Porirua 5240,
New Zealand
Tel: 04 237 1170
branz.co.nz

Product

1.1 GIB EzyBrace® Systems 2016 are a range of wall and ceiling bracing systems based on the use of GIB® Standard, GIB Braceline® and other GIB® plasterboards. GIB EzyBrace® Systems 2016 are used to resist earthquake and wind loads on timber frame buildings designed and constructed in accordance with NZS 3604 and the GIBFix® Framing System. The GIB EzyBrace® Bracing Software provides an electronic means of calculating bracing demand and resistance.

Scope

2.1 GIB EzyBrace® Systems 2016 and the GIB EzyBrace® Bracing Software have been appraised for the design and use of interior wall and ceiling bracing systems in buildings within the scope limitations of NZS 3604.

Building Regulations

New Zealand Building Code (NZBC)

3.1 **In the opinion of BRANZ, the GIB EzyBrace® Systems 2016, if designed, used, installed and maintained in accordance with the statements and conditions of this Appraisal, will meet the following provisions of the NZBC:**

Clause B1 STRUCTURE: Performance B1.3.1, B1.3.2 and B1.3.4. GIB EzyBrace® Systems 2016 meet the requirements for loads arising from self-weight, earthquake, wind and impact [i.e. B1.3.3 (a), (f), (h) and (j)]. See Paragraphs 8.1 - 8.10.

Clause B2 DURABILITY: Performance B2.3.1 (a) not less than 50 years. GIB EzyBrace® Systems 2016 meet this requirement. See Paragraphs 9.1 - 9.4.

Clause F2 HAZARDOUS BUILDING MATERIALS: Performance F2.3.1. GIB EzyBrace® Systems 2016 meet this requirement and will not present a health hazard to people.

3.2 The bracing demand calculation and bracing distribution rules contained in the GIB EzyBrace® Bracing Software are in accordance with Section 5 of NZS 3604. Bracing resistance is provided by bracing element ratings determined in accordance with NZS 3604, Paragraph 8.3.1.2.

3.3 NZS 3604 is an **Acceptable Solution** for compliance with New Zealand Building Code Clause B1 Structure.

Readers are advised to check the validity of this Appraisal by referring to the Valid Appraisals listing on the BRANZ website, or by contacting BRANZ.

Technical Specification

4.1 The GIB® plasterboards and accessories used with the GIB EzyBrace® Systems 2016, and supplied or specified by Winstone Wallboards Ltd are as follows:

GIB® plasterboards

- **GIB® Standard** - GIB® Standard plasterboard is a paper-bound fibreglass reinforced gypsum-plaster core sheet lining material. GIB® Standard plasterboard is available in 10 mm and 13 mm thicknesses and a sheet width of 1200 mm and 1350 mm (GIB® Wideline). The sheets have a taper on the two long sheet edges. The 10 mm thick sheets are also available with a square edge. Sheets are available in various lengths from 2400 mm to 6000 mm. The nominal sheet weight is 6.5 kg/m² for 10 mm thick sheets and 8.5 kg/m² for 13 mm thick sheets. GIB® Standard plasterboard face paper is a light buff colour.
- **GIB Braceline®** - GIB Braceline® is a high-density fibreglass reinforced paper-bound gypsum-plaster core sheet lining material. GIB Braceline® is available in 10 mm and 13 mm thicknesses. The sheets have a taper on the two long sheet edges. GIB Braceline® has a sheet width of 1200 mm and 1350 mm, and is available in lengths of 2400 mm, 2700 mm, 3000 mm, 3600 mm and 4800 mm. The nominal sheet weight is 9 kg/m² for 10 mm thick sheets and 12.5 kg/m² for 13 mm thick sheets. GIB Braceline® face paper is a light blue in colour.
- **Alternative GIB® plasterboards** - In certain situations, as specified in the Technical Literature, substitution is permitted with GIB Aqualine®, GIB Fyreline®, GIB Toughline® and GIB Ultraline®.

Components and Accessories

- **GIB® Accessories and GIB® Jointing Compounds** - As specified in the GIB® Site Guide Technical Literature.
- **Fasteners**
  - **GIB Grabber® High Thread Screws for fixing directly to timber** – 32 mm x 6g.
  - **GIB Nail** – 30 x 2.8 mm.
  - **GIB Grabber® screws for fixing to light gauge steel battens** – 32 mm x 6g.
- **Adhesive and Sealants**
  - **GIBFix® One** – an off-white acrylic adhesive supplied in 375 ml cartridges and 600 ml sausages.
  - **GIBFix® All-Bond** – a green solvent-based adhesive supplied in 375 ml cartridges and 600 ml sausages.
- **GIBFix® Framing Components**
  - **GIBFix® Angle** – 45 x 45 x 0.55 mm galvanised steel angle with a knurled surface. Supplied in lengths of 2.4 and 2.7 m.
  - **GIB Grabber® Dual Thread Screws for fixing to timber through GIBFix® Angle** – 32 mm x 7g needle-point screw with coarse thread lower section and fine thread upper section.
- **Fasteners, Anchors and Connections**
  - **GIB® HandiBrac®** – a one-piece, 2 mm thick, galvanised-steel angle bracket approximately 95 mm high, 65 mm long and 54 mm wide. The bracket is supplied with 5 Type 17 screws 14 g x 35 mm.
  - **BOWMAC® screw bolt** – M10 x 140 mm screw anchor, with a blue painted hex-head.
  - **Coach screws** – 12 mm x 150 mm and 50 x 50 x 3 mm washer hot-dipped galvanised for fixing to timber floors.
  - **Cast-in bolts** – M12 x 150 mm minimum and 50 x 50 x 3 mm washers for fixing to concrete floors.
  - **Shot fired fasteners** – minimum 75 mm x 3.8 mm with 16 mm discs for fixing GS1-N, GS2-N and GS2-NOM internal line bracing elements to concrete slabs.
  - **Galvanised or stainless steel strap** – 25 x 0.9 mm top and bottom plate connections.
  - **Strap fixings** – 30 x 2.5 mm hot-dipped galvanised or stainless-steel flat-head nails.

  Note: For corrosion protection requirements refer to NZS 3604: 2011 Section 4.

Readers are advised to check the validity of this Appraisal by referring to the Valid Appraisals listing on the BRANZ website, or by contacting BRANZ.

- **Ceiling Diaphragms** - Ceiling diaphragms are constructed using timber ceiling battens, or GIB® Rondo® or similar metal ceiling batten systems.
- **Plywood**
  - **Plywood** – minimum of 7 mm thick complying with AS/NZS 2269 D-D Structural Grade.
  - **Plywood fixings** – 50 x 2.5 mm hot-dipped galvanised or stainless-steel annular-grooved, flat-head nails.

Handling and Storage

5.1 The best results are achieved when GIB® plasterboards are treated as a finishing material and protected from damage. Sheets must be stacked flat and kept dry at all times. For limits on stack heights see the GIB® Site Guide. Sheets must be carried on edge and not dragged.

5.2 All accessories must be kept dry.

Technical Literature

6.1 Refer to the Appraisals listing on the BRANZ website for details of the current Technical Literature for GIB EzyBrace® Systems 2016. The Technical Literature must be read in conjunction with this Appraisal. All aspects of design, use, installation and maintenance contained in the Technical Literature and within the scope of this Appraisal must be followed.

Design Information

General

7.1 NZS 3604 provides methods to distribute the bracing elements in walls to resist forces. The use of ceiling diaphragms is defined in the Technical Literature.

7.2 GIB EzyBrace® Systems 2016 are for use in dry, internal situations only.

7.3 GIB EzyBrace® Systems 2016 must not be exposed to temperatures of 52°C or greater for prolonged periods. Refer to appliance and fitting manufacturers for installation details.

GIB EzyBrace® Bracing Software

7.4 The GIB EzyBrace® Bracing Software contains design procedures and an electronic calculation method for bracing demand calculated in accordance with NZS 3604: 2011, Section 5. Floor loadings can be selected in accordance with either NZS 3604, Bracing Demand Tables 5.5 – 5.10 for 2 kPa floor loads or less, or Tables 14.1 – 14.3 for 3 kPa floor loads.

7.5 The bracing demand calculations contained in the GIB EzyBrace® Bracing Software are based on first principles engineering and calculate wind and earthquake demand based on the building parameters entered. Resulting bracing demand calculations are project specific and can differ from values derived using NZS 3604 wind and earthquake demand tables. The GIB EzyBrace® Bracing Software has been assessed as part of this Appraisal.

7.6 The bracing ratings for GIB EzyBrace® Systems 2016 are embedded in the GIB EzyBrace® Bracing Software.

GIBFix® Framing System

7.7 The GIBFix® Framing System utilises GIBFix® Angles fixed at internal corners and at wall/ceiling junctions to reduce the potential for fastener 'popping' and joint cracking due to timber framing movement. The GIBFix® Framing System also offers an alternative arrangement of studs at corners and at intersecting walls to improve insulation and to reduce thermal bridging compared to traditional wall framing layouts. Refer to the Technical Literature for full details.

7.8 Where walls intersect, noggings are required at maximum 900 mm centres to enable fixing of the end stud of the intersecting wall to the main wall framing.

7.9 The GIBFix® Framing System permits the use of a single panel hold-down [e.g. GIB® HandiBrac®] at wall corners and T-intersections for both the across and along bracing directions.

Readers are advised to check the validity of this Appraisal by referring to the Valid Appraisals listing on the BRANZ website, or by contacting BRANZ.

Framing

7.10 GIB EzyBrace® Systems 2016 can be installed using conventional timber framing layouts or by using the layouts provided in the GIBFix® Framing System. The bracing ratings embedded in the GIB EzyBrace® Bracing Software are equally applicable to both framing options.

7.11 Timber framing grade, spacing and construction must comply with NZS 3604. Timber treatment must comply with NZBC Acceptable Solution B2/AS1.

7.12 Winstone Wallboards Ltd recommends the use of kiln-dried stress-graded framing timber. The minimum actual framing dimensions are 90 x 45 mm for external walls and 75 x 45 mm for internal walls.

7.13 Joints in the top plates of bracing panels must be tied together with 3 kN and 6 kN top plate connectors using 25 x 0.9 mm hot-dip galvanised mild steel strap, 3 nails each side of joint for 3 kN and 6 nails each side of joint for 6 kN.

Bracing System GS2-NOM

7.14 Most GIB EzyBrace® Systems require additional fasteners at the corners to achieve the published bracing ratings. The GS2-NOM system only requires fixings at 300 mm centres around the sheet perimeter.

7.15 Where internal doors penetrate a GS2-NOM bracing element and recessed door jambs are used, the sheets may be adhesive fixed around the door opening with GIBFix® All-Bond, instead of screw fixing. This is designed to reduce fastener 'popping' around internal doors when using grooved door frames. Screw fixing should be used where door frames are to be finished with architraves and the architrave will cover the screws. The adhesive fix option around door openings must not be used with any other GIB EzyBrace® Systems 2016.

Alternative GIB® plasterboards

7.16 On occasions, properties additional to bracing may be required of the plasterboard lining. Refer to Table 1.

BOWMAC Screw Bolts

7.17 When BOWMAC Screw Bolts are used as fixings for external walls with concrete masonry header block foundations, the minimum grout/concrete strength must be as specified in NZS 3604. BOWMAC Screw Bolts may be used in Corrosion Zones B and C as defined in NZS 3604. BOWMAC Screw Bolts may only be used in NZS 3604 Corrosion Zone D where the minimum concrete cover to the bolt is 60 mm. This cannot be achieved with standard 90 mm wide timber framing. An alternative option in this scenario is to use 140 mm wide framing.

Table 1: Permitted Alternatives in GIB EzyBrace® Systems

PERMITTED GIB® plasterboard ALTERNATIVES IN GIB EZYBRACE® SYSTEMS 2016									
GIB Ezybrace® Systems 2016 have been designed and tested using only the products specified. Occasionally additional properties may be required to be provided by a different GIB® plasterboard product. The following table provides acceptable alternative options.									
Specified	**Permitted alternative GIB® plasterboard products**								
GIB® plasterboard	GIB® Standard	GIB Ultraline®	GIB Braceline/ Noiseline®	GIB Aqualine®	GIB Toughline®	GIB Fyreline®			
						10mm	13mm	16mm	19mm
GIB® Standard	N/A	✓	✓	✓	✓	✓ NOTE 1	✓NOTE 1 and 3		
GIB Braceline®	X	X	N/A	✓ NOTE 2	✓	X	✓NOTES 1, 2 and 3		

- **NOTE 1:** *The fastener type and length and must be as required for the relevant FRR, system but the fixing pattern must be as required for bracing elements.*
- **NOTE 2:** *The bracing element must be 900 mm or longer. Fasteners must be at maximum 100 mm centres to the perimeter of the bracing element. The bracing corner fastening pattern applies to all four corners of the element.*
- **NOTE 3:** *Specify traditional wall framing layout where a Fire Resistance Rating (FRR) is required. See Paragraph 11.4.*

Readers are advised to check the validity of this Appraisal by referring to the Valid Appraisals listing on the BRANZ website, or by contacting BRANZ.

Structure

Bracing

8.1 The bracing unit (BU) ratings embedded in the GIB EzyBrace® Bracing Software and vary with the wall length.

8.2 The Technical Literature provides comprehensive construction and panel hold-down details. These include bottom plate fixings using anchor screws and cast-in bolts (concrete), coach screws (timber), GIB® HandiBrac® or nailed stud-to-plate straps.

8.3 The bracing units are derived from BRANZ P21 test method based on a wall height of 2.4 m. For greater wall heights the bracing rating is calculated by multiplying the appropriate bracing rating shown in Table 1 by a factor f=2.4 and divided by the wall height in metres. Walls lower than 2.4 m shall be rated as if they were 2.4 m high.

8.4 NZS 3604 limits wall bracing elements to a maximum of 120 BU/m for timber-framed floors and 150 BU/m for concrete floors.

Ceiling Diaphragms

8.5 GIB® ceiling diaphragms are used to space bracing lines further apart than 6 m. The basic shape of a ceiling diaphragm must be square or rectangular and the length must not exceed twice the width.

8.6 For ceiling diaphragms not steeper than 15° and not exceeding 7.5 m in length, any GIB® plasterboard may be used provided the perimeter fixing are at 150 mm centres.

8.7 For ceiling diaphragms not steeper than 45° and not exceeding 7.5 m in length, and for diaphragms not steeper than 25° and not exceeding 12 m in length, any GIB® plasterboard may be used provided the perimeter fixings are at 100 mm centres.

Openings in Bracing Elements

8.8 Small openings of 90 x 90 mm or less may be placed anywhere except within 90 mm of the edge of the bracing element.

Shower Areas

8.9 GIB EzyBrace® Systems 2016 must not be located in shower cubicles or behind baths and the like. GIB EzyBrace® Systems 2016 may be used in water-splash areas provided they are protected as required by NZBC Clause E3 Internal Moisture. Refer GIB Aqualine® Wet Area Systems.

Impact Resistance

8.10 GIB® plasterboards provide adequate resistance to soft body impact, based upon history of use in domestic and light commercial applications.

Durability

9.1 GIB EzyBrace® Systems 2016, including linings and their fixings have a serviceable life of at least 50 years. The ability of the systems to remain durable is dependent on them remaining dry in service, and being maintained in accordance with this Appraisal.

Maintenance

9.2 The building must be maintained weatherproof and GIB® plasterboards must be protected from external and internal moisture in accordance with NZBC Clauses E2 and E3.

9.3 Holes resulting from damage to the lining, up to 100 x 100 mm square, will have no significant effect on the performance of the bracing panel. Such holes may be repaired by patching, stopping and finishing as appropriate. Independent expert advice must be sought to assess the effect and repair of larger areas of damage.

9.4 Bracing elements require no ongoing maintenance, apart from decoration and the repair of any damage.

Readers are advised to check the validity of this Appraisal by referring to the Valid Appraisals listing on the BRANZ website, or by contacting BRANZ.

Prevention of Fire Occurring

10.1 Separation or protection must be provided to GIB® plasterboard from heat sources such as fire places, heating appliances, flues and chimneys. Part 7 of NZBC Acceptable Solutions C/AS1 – C/AS6 and NZBC Verification Method C/VM1 provide methods for separation and protection of combustible materials from heat sources.

Fire Affecting Areas Beyond the Fire Source

11.1 For Internal Surface Finish properties and Fire Resistance Ratings, refer to BRANZ Appraisal No. 289 [2012] GIB® Fire Rated Systems.

Internal Moisture

12.1 GIB® plasterboard must be used in dry internal situations, and must not be used where likely to be exposed to liquid water, or where extended exposure to humidity above 90% RH is expected, e.g., such as may be expected in sauna rooms, commercial kitchens and the like.

Installation Information

Installation Skill Level Requirement

13.1 Installation of GIB EzyBrace® Systems 2016 must be completed by, or under the supervision of a Licensed Building Practitioner with the relevant Licence Class, in accordance with the Technical Literature and this Appraisal.

General

14.1 GIB EzyBrace® Systems 2016 must be installed in accordance with the Technical Literature. For inspection, reference must be made to the Technical Literature.

Framing

14.2 To achieve an acceptable decorative finish, the GIB® Site Guide specifies that walls must not be lined unless the moisture content of timber framing is less than 18%. Winstone Wallboards Ltd recommends a moisture content of 12% or less where buildings are to be air conditioned, centrally heated or have heat pumps installed.

14.3 Where the GIBFix® Framing System is used, GIBFix® Angles are tacked to the framing with flat-head clouts prior to installation of the GIB® plasterboard.

Cutting

14.4 GIB® plasterboard is easily cut by scoring the face paper with a sharp short-bladed trimming knife, and then snapping the plasterboard away from the cut face and cutting the back paper or by sawing. Use of a metal straightedge facilitates clean straight cuts. Cut edges can be tidied up by using a knife. Paper dags should be removed.

Hold-downs

14.5 GIB EzyBrace® Systems 2016 which require hold-downs must either have a GIB® Handibrac® fitted to each end of the bracing element or alternatively a metal stud-to-plate strap and hold-down anchor may be used. Refer to the Technical Literature for full installation details. Where a metal stud-to-plate strap is used, the hold-down anchor must be placed no more than 80 mm from the end of the bracing element.

14.6 Where the GIBFix® Framing System is used, a single hold-down located at a wall intersection may be used to provide the hold-down in both the across and along bracing directions.

Readers are advised to check the validity of this Appraisal by referring to the Valid Appraisals listing on the BRANZ website, or by contacting BRANZ.

Plasterboard Sheet Fixing

14.7 Corner fixings must be 50 mm away from the sheet corner. Fixings must be no closer than 12 mm from the paper-bound sheet edge, and no closer than 18 mm from a cut edge, and driven at right angles to the sheet until the head is seated in a slight dimple just below the surface of the paper liner. Fixings must not be over-driven.

14.8 Wall bracing plasterboards (except for those used with the GS2-NOM system) are fixed at 150 mm centres around the perimeter framing of the bracing element *(Note variation for GIB Aqualine® and GIB Fyreline® - see Table 1)*. At the corners of the wall bracing elements, a special fastening pattern is required with fasteners spaced at 50 mm, 100 mm, 150 mm, 225 mm and 300 mm from the corner and there-after at 150 mm centres. Fixing to other framing is either mechanical or by using GIBFix® adhesives.

14.9 When installing GS2-NOM bracing elements, the GIB® plasterboard is fixed to framing around the bracing element perimeter and at sheet joints with fasteners at maximum 300 mm centres. Where recessed door jambs are used on internal door frames, the GIB® plasterboard may be fixed to the framing around the door opening with GIBFix® All-Bond. See Paragraph 7.15.

14.10 Where GIB Aqualine® or GIB Fyreline® substitutes for GIB Braceline®, bracing elements must be longer than 900 mm and the bracing element perimeter fasteners must be spaced at 100 mm centres and the corner pattern described in Paragraph 14.8 used.

14.11 Full sheets must be used wherever possible.

Fire Resistance Rated Bracing Elements

14.12 Where a bracing element is also used as a fire-rated element, the method of fixing (including the length of the fixing specified) for the fire-rated element must be used, but the perimeter fixings of the bracing element must be at 150 mm centres and fixings at corners of the bracing element must be fixed as described in Paragraph 14.8. In two-layer systems the inner layer must be used for bracing.

Plywood Fixing

14.13 Plywood is nail fixed at 150 mm centres around the perimeter of each sheet and at 300 mm centres to intermediate framing.

Ceiling Diaphragms

14.14 All GIB EzyBrace® System 2016 ceiling diaphragms require fixings around the perimeter at 100 or 150 mm centres, depending on the ceiling pitch and length. See Paragraphs 8.4 to 8.6 and refer to the Technical Literature.

14.15 The perimeter of the ceiling diaphragm is fixed to GIBFix® Angles, GIB® Rondo® perimeter channels, or alternatively, to an additional ex 150 x 40 mm timber plate fixed to the top plate.

Jointing and Finishing

14.16 All bracing element joints must be reinforced with GIB® tape and finished in accordance with the GIB® Site Guide.

Health and Safety

15.1 Dust resulting from the sanding of stopping and finishing compounds may be a respiratory irritant, and the use of a suitable facemask is recommended.

Readers are advised to check the validity of this Appraisal by referring to the Valid Appraisals listing on the BRANZ website, or by contacting BRANZ.

Basis of Appraisal

The following is a summary of the technical investigations carried out:

Tests

16.1 Bracing tests were carried out by Winstone Wallboards Ltd in accordance with BRANZ Technical Paper P21 to determine the performance of GIB EzyBrace® Systems 2016 when the building is subjected to lateral wind or earthquake loading. Nail and screw slip tests were carried out by BRANZ and Winstone Wallboards Ltd. The Winstone Wallboard's test facilities, procedures and results have been reviewed by BRANZ and found to be satisfactory.

Other Investigations

17.1 The GIB EzyBrace® Bracing Software has been assessed by BRANZ and found to be satisfactory.

17.2 The GIB EzyBrace® Systems 2016 and GIB® Site Guide Technical Literature have been examined by BRANZ and found to be satisfactory.

17.3 Site visits were carried out by BRANZ to assess the practicability of the installation of the systems, and to view completed installations.

17.4 An assessment was made of the durability of the systems by BRANZ technical experts and found to be satisfactory.

17.5 The properties of Winstone Wallboards Ltd GIB® plasterboards have been assessed for the following properties: MOR, MOE, paper tensile strength, paper shear strength, nail pull resistance, Hunter hardness, inspection for fungal spores, hard and soft body impact tests.

Quality

18.1 Winstone Wallboards Ltd's manufacturing process and details of the quality and composition of the materials, have been examined by BRANZ and found to be satisfactory.

18.2 The quality management systems of Winstone Wallboards Ltd have been assessed and registered by TELARC as meeting the requirements of ISO 9001, Registration No. 581.

18.3 Winstone Wallboards Ltd is responsible for the quality of the product supplied.

18.4 The quality of the application and finish on site is the responsibility of the installation and stopping contractors.

18.5 Designers are responsible for the design of buildings.

18.6 Building owners are responsible for the maintenance in accordance with the instructions of Winstone Wallboards Ltd.

Sources of Information

- AS/NZS 2269.0:2012 Plywood - Structural - Specifications
- AS/NZS 2588: 1998 Gypsum plasterboard.
- BRANZ Technical Paper P21: 2010 A wall bracing test and evaluation procedure.
- NZS 3604: 2011 Timber-framed buildings.
- Ministry of Business, Innovation and Employment Record of Amendments for Compliance Documents and Handbooks.
- The Building Regulations 1992.

Readers are advised to check the validity of this Appraisal by referring to the Valid Appraisals listing on the BRANZ website, or by contacting BRANZ.

BRANZ

In the opinion of BRANZ, GIB Ezybrace® Systems 2016 is fit for purpose and will comply with the Building Code to the extent specified in this Appraisal provided it is used, designed, installed and maintained as set out in this Appraisal.

The Appraisal is issued only to Winstone Wallboards Ltd, and is valid until further notice, subject to the Conditions of Appraisal.

Conditions of Appraisal

1. This Appraisal:
   a) relates only to the product as described herein;
   b) must be read, considered and used in full together with the Technical Literature;
   c) does not address any Legislation, Regulations, Codes or Standards, not specifically named herein;
   d) is copyright of BRANZ.
2. Winstone Wallboards Ltd:
   a) continues to have the product reviewed by BRANZ;
   b) shall notify BRANZ of any changes in product specification or quality assurance measures prior to the product being marketed;
   c) abides by the BRANZ Appraisals Services Terms and Conditions.
   d) Warrants that the product and the manufacturing process for the product are maintained at or above the standards, levels and quality assessed and found satisfactory by BRANZ pursuant to BRANZ's Appraisal of the product.
3. BRANZ makes no representation or warranty as to:
   a) the nature of individual examples of, batches of, or individual installations of the product, including methods and workmanship;
   b) the presence or absence of any patent or similar rights subsisting in the product or any other product;
   c) any guarantee or warranty offered by Winstone Wallboards Ltd.
4. Any reference in this Appraisal to any other publication shall be read as a reference to the version of the publication specified in this Appraisal.
5. BRANZ provides no certification, guarantee, indemnity or warranty, to Winstone Wallboards Ltd or any third party.

For BRANZ

Chelydra Percy
Chief Executive

Date of Issue:
05 September 2016

Readers are advised to check the validity of this Appraisal by referring to the Valid Appraisals listing on the BRANZ website, or by contacting BRANZ.

BRANZ Appraised
Appraisal No.427 [2007]

BRANZ Appraisals

Technical Assessments of products for building and construction

BRANZ APPRAISAL No. 427 (2007)

Amended 31 January 2012

GIB AQUALINE® WET AREA SYSTEMS

Winstone Wallboards Limited
P O Box 12 256
Penrose
Auckland 1642

Tel: 09 633 0100
Fax: 09 633 0101
Helpline Tel: 0800 100 442
Helpline Fax: 0800 229 222
Web: www.gib.co.nz
Email: info@gib.co.nz

BRANZ Limited
Private Bag 50 908
Porirua City
New Zealand
Tel: +64 4 237 1170
Fax: +64 4 237 1171
www.branz.co.nz

Product

1.1 GIB Aqualine® Wet Area Systems are for the interior lining of timber and steel frame walls and ceilings in wet areas such as bathrooms, laundries, kitchens and toilets where a water resistant lining material is desirable.
1.2 GIB Aqualine® Wet Area Systems are based on 10 mm and 13 mm thick GIB Aqualine® water resistant plasterboard.

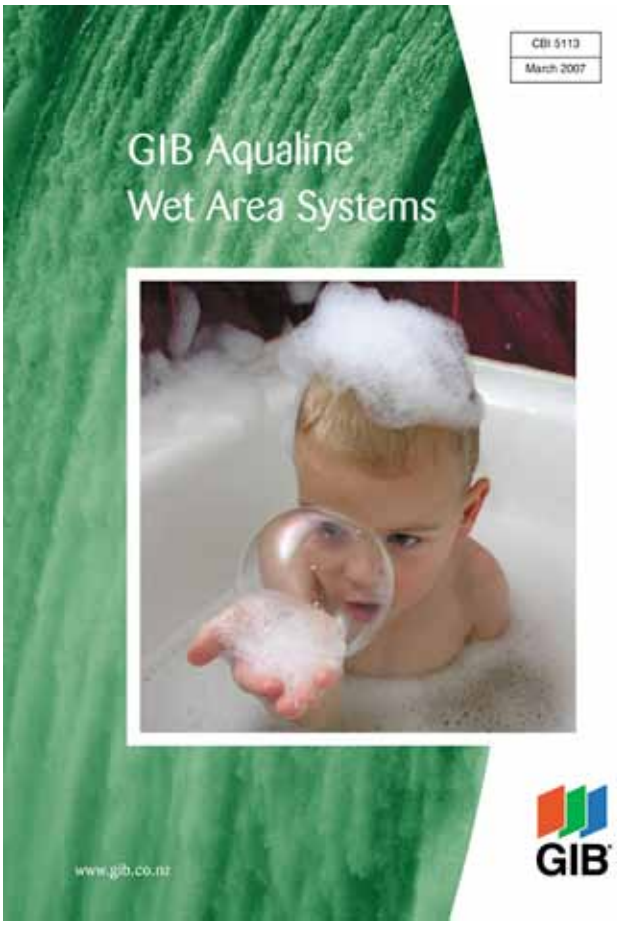

Scope

2.1 GIB Aqualine® Wet Area Systems have been appraised for use as a wet area wall and ceiling lining in buildings within the following scope:
- on framed walls and ceilings within the scope limitations on NZS 3604; and,
- on timber and light gauge steel framed walls and ceiling subject to specific design; and,

2.2 GIB Aqualine® may also be used to substitute for some other GIB® Plasterboards in fire-rated, sound-rated and bracing-rated wall and floor/ceiling constructions.

Building Regulations

New Zealand Building Code (NZBC)

3.1 In the opinion of BRANZ, the GIB Aqualine® Wet Area Systems, if designed, used, installed and maintained in accordance with the statements and conditions of this Appraisal, will meet or contribute to meeting the following provisions of the NZBC:
Clause B1 STRUCTURE: Performance B1.3.1, B1.3.2 and B1.3.4. GIB Aqualine® Wet Area Systems meet the requirements for loads arising from self-weight, earthquake, wind and impact [i.e. B1.3.3 (a), (f), (h) and (j)]. See Paragraphs 8.1 - 8.3.
Clause B2 DURABILITY: Performance B2.3.1 (a) not less than 50 years, B2.3.1 (b) 15 years and B2.3.1 (c) 5 years. GIB Aqualine® Wet Area Systems meet these requirements. See Paragraphs 9.1 - 9.5.

Readers are advised to check the validity of this Appraisal by referring to the Valid Appraisals listing on the BRANZ website, or by contacting BRANZ.

Clause C3 SPREAD OF FIRE: Performance C3.3.1, C3.3.2, and C3.3.5. GIB Aqualine® Wet Area Systems meet these requirements by providing passive fire and smoke protection.
Clause E3 INTERNAL MOISTURE: Performance E3.3.4, E3.3.5 and E3.3.6. GIB Aqualine® Wet Area Systems meet these requirements. See Paragraphs 13.1 - 13.3.
Clause F2 HAZARDOUS BUILDING MATERIALS: Performance F2.3.1. GIB Aqualine® Wet Area Systems meet this requirement and will not present a health hazard to people.
Clause G6 AIRBORNE AND IMPACT SOUND: Performance G6.3.1 and G6.3.2. GIB Aqualine® Wet Area Systems meet the requirements. See Paragraph 14.1.

3.2 This is an Appraisal of an **Alternative Solution** in terms of New Zealand Building Code compliance.

Technical Specification

4.1 The GIB® plasterboards and accessories used in the GIB Aqualine® Wet Area System and supplied or specified by Winstone Wallboards Limited are as follows:

GIB Aqualine®

4.2 GIB Aqualine® is a paper-bound, modified water-resistant gypsum-plaster core sheet lining material. The sheets have a taper on the two long sheet edges. GIB Aqualine® is available in 10 mm and 13 mm sheet thicknesses, a sheet width of 1200 mm and in lengths of 2400 mm, 2700 mm, 3000 mm and 3600 mm. The maximum weights are 7.8 kg/m^2 and 10.2 kg/m^2 for 10 mm and 13 mm thick sheets respectively. GIB Aqualine® face paper is green in colour.

Fastenings

- GIB® Grabber® High Thread Drywall screws for fixing to timber:
  6g x 25 mm and 32 mm.
- GIB® Grabber® Self Tapping Drywall screws for fixing to light gauge steel:
  6g x 25 mm and 32 mm.
- GIB® Nails
  30 mm and 40 mm x 2.8 mm

Adhesive and Sealants

- GIBFix® One (Acrylic)
- GIBFix® All-Bond (Solvent)

GIB® Accessories and GIB® Jointing Compounds

- As specified in the GIB Aqualine® Wet Area Systems and GIB® Site Guide Technical Literature.

Finishes

4.3 Finishes such as tiling, flexible sheet vinyl, paints and wallpapers have not been assessed and are outside the scope of this Appraisal.

Handling and Storage

5.1 The best results are achieved when GIB Aqualine® is treated as a finishing material and protected from damage. Sheets must be stacked flat and kept dry at all times. For limits on stack heights see the GIB® Site Guide. Sheets must be carried on edge and not dragged.
5.2 All accessories must be kept dry.

Technical Literature

6.1 Refer to the Appraisals listing on the BRANZ website for details of the current Technical Literature for the GIB Aqualine® Wet Area System. The Technical Literature must be read in conjunction with this Appraisal. All aspects of design, use, installation and maintenance contained in the Technical Literature and within the scope of this Appraisal must be followed.

Design Information

General

7.1 GIB Aqualine® provides a water-resistant lining as a base for finishing systems in wet areas such as bathrooms, toilets, laundries and kitchens. The typical finishes are ceramic tiles and flexible sheet vinyl to walls and paint, and wallpaper to walls and ceilings.
7.2 GIB Aqualine® must not be used in the following situations:

- For bracing applications in shower areas or adjacent baths (See Paragraphs 7.4 and 8.2).
- In areas of high humidity (above 90% RH) or continually wet such as group showers, steam rooms, or swimming pools.
- Installed over a vapour barrier.
- Applied directly to masonry, concrete or solid plaster.
- Applied over other sheet lining materials.
- Used externally of the building envelope.
- Exposed to temperatures of 52ºC or greater for prolonged periods. (Refer to appliance and fitting manufacturer's for installation details.)

7.3 GIB Aqualine® may be substituted for some other GIB® Plasterboard products in specific GIB® Bracing Systems, GIB® Fire Rated Systems, GIB® Noise Control Systems and GIB Ultraline® PLUS Lining System.

Wet Areas

7.4 Wet areas are spaces where sanitary fixture and sanitary appliances are located such as bathrooms, toilets, laundries and kitchens. There are two general categories of wet areas as follows:

1. Water Splash – These are areas subject to intermittent splashing of water such as around baths, vanities, tubs and sinks.
2. Shower Areas – These are areas subject to frequent and heavy water splash such as enclosed showers, unenclosed shower zones and showers over baths.

7.5 Both the above wet area categories must be finished with surfaces and joints that are impervious and easily cleaned. Shower areas must additionally be waterproof. This can be achieved using proprietary rigid shower lining systems, flexible vinyl shower wall finish, or tiling. Tiled shower areas must include a wet area waterproofing membrane system under the tiles.

Intertenancy Walls – Wet Areas

7.6 Intertenancy drywall constructions that incorporate fire resistance and noise control must be protected from water splash. In shower areas GIB Aqualine® must not be substituted for other GIB® Plasterboards but must be an extra lining layer. Refer to the GIB Aqualine® Wet Area Systems Technical Literature.

Tiling

7.7 GIB Aqualine® is suitable as a substrate for tiling up to the following weights:

- 10 mm GIB Aqualine® up to 20kg/m^2
- 13 mm GIB Aqualine® up to 32kg/m^2.

Note: Most ceramic and porcelain wall tiles weigh less than 20kg/m². For further information on tiling consult the BRANZ Good Practice Guide – Tiling.

Framing

7.8 Supporting framing must comprise one of the following subject to the minimum sizes, dwang centres and all other frame requirements of GIB Aqualine® Wet Area Systems Technical Literature:

- Timber framing must be designed and constructed in accordance with NZS 3604, or to a specific design using NZS 3603 and AS/NZS 1170.
- Steel framing must be designed to withstand loads in accordance with AS/NZS 1170.

Structure

Bracing

8.1 GIB Aqualine® can be used in place of GIB® Standard plasterboard in GIB® bracing elements. GIB Aqualine® can be used in place of GIB Braceline® in GIB® bracing elements 900 mm or longer, provided the perimeter of the element is fixed with GIB Braceline® Nails or GIB Braceline® screws at 100 mm centres, using the GIB Braceline® corner fixing pattern.

8.2 GIB Aqualine® must not be used for bracing in shower areas or behind baths.

Impact Resistance

8.3 GIB® plasterboards provide adequate resistance to soft body impact, based upon experience of use in domestic and light commercial applications.

Durability

Serviceable Life

9.1 GIB Aqualine® has a serviceable life of at least 15 years as a fully protected shower or water splash lining. As a general wall and ceiling lining GIB Aqualine® will have a serviceable life in excess of 50 years. The ability of GIB Aqualine® to remain durable is dependent on being protected and remaining dry in service, and being maintained in accordance with this Appraisal.

Maintenance

9.2 The building must be maintained weathertight and all lining systems protected from internal and external moisture.

9.3 Finishes to water splash and shower areas, including tiles, grout, waterproof membranes, sealants and flexible sheet vinyl must be checked to ensure the integrity of the system is maintained. They must be repaired or replaced if necessary. When repairing or replacing finishes, the GIB Aqualine® substrate must be checked for defects and repaired or replaced, as required.

9.4 For flexible sheet vinyl, particular attention must be paid to joints especially at corners. Checks should be made to ensure the vinyl has not been punctured. Where damage has occurred, repairs must be made immediately.

9.5 Impact damage to GIB Aqualine® plasterboard, resulting in small holes and cracks, may be patched, stopped and finished. For larger areas of damage, expert advice on repair must be sought from Winstone Wallboards Ltd.

Outbreak of Fire

10.1 Separation or protection must be provided to GIB Aqualine® Wet Area Systems from heat sources such as stoves, heaters, flues and chimneys.

10.2 NZBC Acceptable Solution C/AS1, Part 9 and Verification Method C/VM1 provide methods for separation and protection of combustible materials from heat sources.

Spread of Fire

11.1 When 10 mm GIB Aqualine® is substituted into fire rated systems in place of 10 mm GIB Fyreline®, the FRR of that system will be maintained. Similarly, the FRR is maintained when 13 mm GIB Aqualine® is substituted for 13 mm GIB Fyreline®.

Flame Barrier

12.1 Where flame barriers are required by Acceptable Solution C/AS1 Table 6.3, GIB Aqualine® is a suitable material to provide a 10 minute flame barrier, provided all sheet joints are formed over framing, or backblocked with GIB® plasterboard.

Internal Moisture

13.1 When installed in accordance with this Appraisal, GIB Aqualine® Wet Area Systems will provide wall surfaces adjacent to sanitary fixtures and sanitary appliances that are impervious and easily cleaned.

13.2 The construction methods meet with the internal moisture requirements of the NZBC Acceptable Solution E3/AS1.

13.3 To minimise internal condensation, adequate levels of ventilation and thermal resistance must be provided to all spaces where moisture may be generated.

Airborne and Impact Sound

14.1 When GIB Aqualine® is substituted into GIB® Noise Control systems in place of the equivalent thickness GIB® Standard plasterboard or GIB Fyreline®, the STC and IIC rating of that system will be maintained. When GIB Aqualine® is substituted in place of the equivalent thickness GIB Noiseline®, a small performance loss may occur.

Installation Information

Installation Skill Level Requirement

15.1 Installation of GIB Aqualine® Wet Area Systems can be carried out by any competent building contractor.

General

16.1 GIB Aqualine® Wet Area Systems must be installed in accordance with the Technical Literature. For inspection, reference must be made to the Technical Literature.

Cutting

16.2 GIB Aqualine® is easily cut by scoring the face paper with a sharp short-bladed trimming knife, and then snapping the plasterboard away from the cut face and cutting the back paper or by sawing. Use of a metal straightedge facilitates clean straight cuts. Cut edges can be tidied up by using a knife. Paper dags should be removed.

Health and Safety

16.3 Dust resulting from the sanding of stopping and finishing compounds may be a respiratory irritant, and the use of a suitable facemask is recommended.

Framing

16.4 To achieve an acceptable decorative finish, GIB Aqualine® Wet Area Systems and the GIB® Site Guide specifies that walls must not be lined unless the moisture content of timber framing is less than 18%. Winstone Wallbaords Limited recommend a moisture content of 8–12% where buildings are to be air conditioned or centrally heated.

Fixing Sheets

Non-Tiled Areas

17.1 GIB Aqualine® sheets may be installed vertically or horizontally. Sheets are fixed with GIB® Grabber® screws or GIB® Nails at 300 mm centres around the perimeter of the sheet, and with GIBFix® adhesive on all intermediate studs and dwangs. Adhesive must not be used under fasteners. A 5-10 mm gap must be left between the floor and the bottom of the sheet.

Tiled Areas

17.2 Control joints must be provided at maximum 4 m centres.
Internal corners in shower areas must be reinforced with a minimum 32 x 32 x 0.55 mm galvanised metal angle prior to lining the walls.
17.3 GIB Aqualine® sheets may be installed vertically or horizontally. Sheets are fixed with GIB® Grabber® screws at 100 mm centres to perimeter of wall and to all intermediate studs. Adhesive must not be used in place of screws.

Ceilings

17.4 Supports of timber or steel battens or ceiling joists must be 450 centres for 10 mm GIB Aqualine®, or 600 mm centres for 13 mm GIB Aqualine®.
17.5 GIB Aqualine® sheets must be fixed with GIB® Grabber® screws at 600 mm centres around perimeter and at 200 mm centre along supports. Alternatively, sheets are screw fixed at 600 mm centres along the supports and GIBFix® adhesive fixed at 200 mm centre between.

Penetrations and Sealants

18.1 All cut-outs for pipe penetrations must be made neatly using a hole saw. Cut-outs should be made approximately 12 mm diameter greater than the pipe.
18.2 A bead of silicone sealant must be placed to the full thickness of the GIB Aqualine® sheet around all pipe penetrations, at bath rims and preformed shower bases and where an impervious junction is required at the floor/wall line.
18.3 In tiled areas, a bead of silicone sealant 6 mm wide must also be placed to the full thickness of the tiles where the above situation occurs. The sealant manufacturer's technical literature must be followed for installation.

Jointing and Finishing

19.1 Jointing must be carried out in accordance with GIB® Site Guide Technical Literature.
19.2 Tiled shower areas must incorporate a waterproofing membrane over GIB Aqualine®. Waterproofing membranes are outside the scope of this Appraisal and must otherwise be specified and approved.

Investigations

20.1 The GIB Aqualine® Wet Area Systems and GIB® Site Guide Technical Literature have been examined by BRANZ and found to be satisfactory.
20.2 Site visits were carried out by BRANZ to assess the practicability of the installation of the systems, and to view completed installations.
20.3 An assessment was made of the durability of the systems by BRANZ technical experts and found to be satisfactory.
20.4 Winstone Wallboards Limited GIB® plasterboards have been assessed for the following properties: MOR, MOE, paper tensile strength, paper shear strength, nail pull resistance, Hunter hardness, inspection for fungal spores, hard and soft body impact tests.

Quality

21.1 Winstone Wallboards Limited's manufacturing process and details of the quality and composition of the materials, have been examined by BRANZ and found to be satisfactory.
The quality management systems of Winstone Wallboards Limited have been assessed and registered by TELARC as meeting the requirements of ISO 9001, Registration No. 581.
Winstone Wallboards Limited is responsible for the quality of the product supplied.
21.2 The quality of the application and finish on site is the responsibility of the installation, stopping and finishing contractors.
21.3 Designers are responsible for the design of buildings.
21.4 Building owners are responsible for the maintenance in accordance with the instructions of Winstone Wallboards Limited.

Sources of Information

- AS/NZS 1170: 2002 Structural design actions.
- AS/NZS 2588: 1998 Gypsum Plasterboard.
- NZS 3602: 2003 Timber and wood-based products for use in building.
- NZS 3603: 1993 Timber structures standard.
- NZS 3604: 2011 Timber-framed buildings.
- BRANZ Good Practice Guide - Tiling, March 2004.
- New Zealand Building Code Handbook and Approved Documents, Building Industry Authority, 1992.
- The Building Regulations 1992, up to, and including October 2004 Amendment.

In the opinion of BRANZ, GIB Aqualine® Wet Area Systems are fit for purpose and will comply with the Building Code to the extent specified in this Appraisal provided they are used, designed, installed and maintained as set out in this Appraisal.

The Appraisal is issued only to the Client, Winstone Wallboards Limited, and is valid until further notice, subject to the Conditions of Appraisal.

Conditions of Appraisal

1. This Appraisal:
a) relates only to the product as described herein;
b) must be read, considered and used in full together with the technical literature;
c) does not address any Legislation, Regulations, Codes or Standards, not specifically named herein;
d) is copyright of BRANZ.
2. The Client:
a) continues to have the product reviewed by BRANZ;
b) shall notify BRANZ of any changes in product specification or quality assurance measures prior to the product being marketed;
c) abides by the BRANZ Appraisals Services Terms and Conditions.
3. The product and the manufacture are maintained at or above the standards, levels and quality assessed and found satisfactory by BRANZ.
4. BRANZ makes no representation as to:
a) the nature of individual examples of, batches of, or individual installations of the product, including methods and workmanship;
b) the presence or absence of any patent or similar rights subsisting in the product or any other product;
c) any guarantee or warranty offered by the Client.
5. Any reference in this Appraisal to any other publication shall be read as a reference to the version of the publication specified in this Appraisal.

For BRANZ

P Robertson
Chief Executive

Date of issue: 4 April 2007

Amendment No. 1, dated 29 April 2010.
This Appraisal has been amended to include a new adhesive, GIBFix® One, and to update reference to AS/NZS 1170.
Amendment No. 2, dated 31 January 2012.
This Appraisal has been amended to update reference to NZS 3604: 2011.

BRANZ Appraised
Appraisal No.427 [2007]

BRANZ Appraisals

Technical Assessments of products for building and construction

BRANZ APPRAISAL No. 427 (2007)

Amended 31 January 2012

GIB AQUALINE® WET AREA SYSTEMS

Winstone Wallboards Limited
P O Box 12 256
Penrose
Auckland 1642

Tel: 09 633 0100
Fax: 09 633 0101
Helpline Tel: 0800 100 442
Helpline Fax: 0800 229 222
Web: www.gib.co.nz
Email: info@gib.co.nz

BRANZ

BRANZ Limited
Private Bag 50 908
Porirua City
New Zealand
Tel: +64 4 237 1170
Fax: +64 4 237 1171
www.branz.co.nz

WFTAO

Product

1.1 GIB Aqualine® Wet Area Systems are for the interior lining of timber and steel frame walls and ceilings in wet areas such as bathrooms, laundries, kitchens and toilets where a water resistant lining material is desirable.
1.2 GIB Aqualine® Wet Area Systems are based on 10 mm and 13 mm thick GIB Aqualine® water resistant plasterboard.

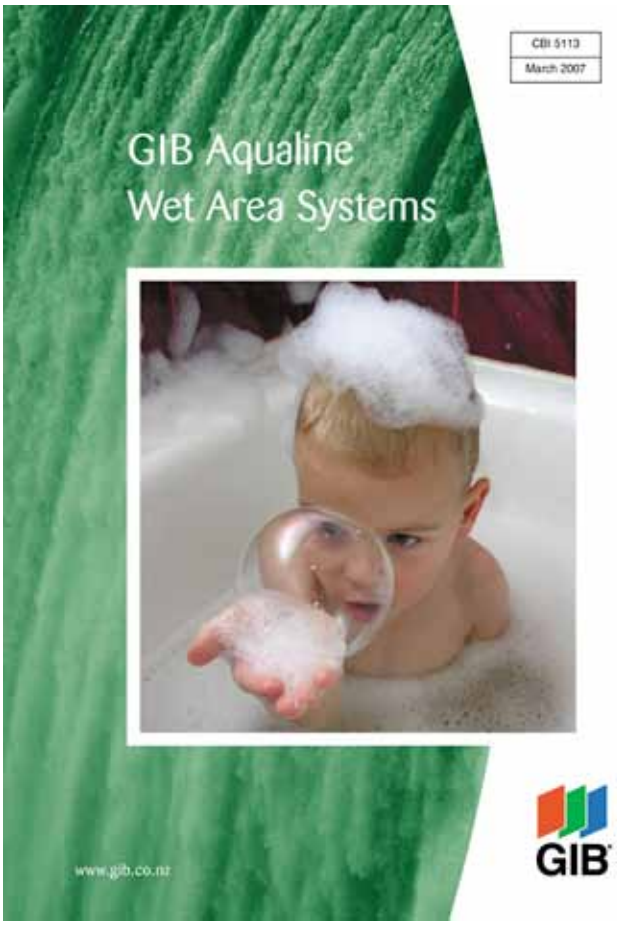

Scope

2.1 GIB Aqualine® Wet Area Systems have been appraised for use as a wet area wall and ceiling lining in buildings within the following scope:
- on framed walls and ceilings within the scope limitations on NZS 3604; and,
- on timber and light gauge steel framed walls and ceiling subject to specific design; and,

2.2 GIB Aqualine® may also be used to substitute for some other GIB® Plasterboards in fire-rated, sound-rated and bracing-rated wall and floor/ceiling constructions.

Building Regulations

New Zealand Building Code (NZBC)

3.1 In the opinion of BRANZ, the GIB Aqualine® Wet Area Systems, if designed, used, installed and maintained in accordance with the statements and conditions of this Appraisal, will meet or contribute to meeting the following provisions of the NZBC:
Clause B1 STRUCTURE: Performance B1.3.1, B1.3.2 and B1.3.4. GIB Aqualine® Wet Area Systems meet the requirements for loads arising from self-weight, earthquake, wind and impact [i.e. B1.3.3 (a), (f), (h) and (j)]. See Paragraphs 8.1 - 8.3.
Clause B2 DURABILITY: Performance B2.3.1 (a) not less than 50 years, B2.3.1 (b) 15 years and B2.3.1 (c) 5 years. GIB Aqualine® Wet Area Systems meet these requirements. See Paragraphs 9.1 - 9.5.

Readers are advised to check the validity of this Appraisal by referring to the Valid Appraisals listing on the BRANZ website, or by contacting BRANZ.

Clause C3 SPREAD OF FIRE: Performance C3.3.1, C3.3.2, and C3.3.5. GIB Aqualine® Wet Area Systems meet these requirements by providing passive fire and smoke protection.
Clause E3 INTERNAL MOISTURE: Performance E3.3.4, E3.3.5 and E3.3.6. GIB Aqualine® Wet Area Systems meet these requirements. See Paragraphs 13.1 - 13.3.
Clause F2 HAZARDOUS BUILDING MATERIALS: Performance F2.3.1. GIB Aqualine® Wet Area Systems meet this requirement and will not present a health hazard to people.
Clause G6 AIRBORNE AND IMPACT SOUND: Performance G6.3.1 and G6.3.2. GIB Aqualine® Wet Area Systems meet the requirements. See Paragraph 14.1.

3.2 This is an Appraisal of an **Alternative Solution** in terms of New Zealand Building Code compliance.

Technical Specification

4.1 The GIB® plasterboards and accessories used in the GIB Aqualine® Wet Area System and supplied or specified by Winstone Wallboards Limited are as follows:

GIB Aqualine®

4.2 GIB Aqualine® is a paper-bound, modified water-resistant gypsum-plaster core sheet lining material. The sheets have a taper on the two long sheet edges. GIB Aqualine® is available in 10 mm and 13 mm sheet thicknesses, a sheet width of 1200 mm and in lengths of 2400 mm, 2700 mm, 3000 mm and 3600 mm. The maximum weights are 7.8 kg/m^2 and 10.2 kg/m^2 for 10 mm and 13 mm thick sheets respectively. GIB Aqualine® face paper is green in colour.

Fastenings

- GIB® Grabber® High Thread Drywall screws for fixing to timber:
  6g x 25 mm and 32 mm.
- GIB® Grabber® Self Tapping Drywall screws for fixing to light gauge steel:
  6g x 25 mm and 32 mm.
- GIB® Nails
  30 mm and 40 mm x 2.8 mm

Adhesive and Sealants

- GIBFix® One (Acrylic)
- GIBFix® All-Bond (Solvent)

GIB® Accessories and GIB® Jointing Compounds

- As specified in the GIB Aqualine® Wet Area Systems and GIB® Site Guide Technical Literature.

Finishes

4.3 Finishes such as tiling, flexible sheet vinyl, paints and wallpapers have not been assessed and are outside the scope of this Appraisal.

Handling and Storage

5.1 The best results are achieved when GIB Aqualine® is treated as a finishing material and protected from damage. Sheets must be stacked flat and kept dry at all times. For limits on stack heights see the GIB® Site Guide. Sheets must be carried on edge and not dragged.
5.2 All accessories must be kept dry.

Technical Literature

6.1 Refer to the Appraisals listing on the BRANZ website for details of the current Technical Literature for the GIB Aqualine® Wet Area System. The Technical Literature must be read in conjunction with this Appraisal. All aspects of design, use, installation and maintenance contained in the Technical Literature and within the scope of this Appraisal must be followed.

Design Information

General

7.1 GIB Aqualine® provides a water-resistant lining as a base for finishing systems in wet areas such as bathrooms, toilets, laundries and kitchens. The typical finishes are ceramic tiles and flexible sheet vinyl to walls and paint, and wallpaper to walls and ceilings.
7.2 GIB Aqualine® must not be used in the following situations:

- For bracing applications in shower areas or adjacent baths (See Paragraphs 7.4 and 8.2).
- In areas of high humidity (above 90% RH) or continually wet such as group showers, steam rooms, or swimming pools.
- Installed over a vapour barrier.
- Applied directly to masonry, concrete or solid plaster.
- Applied over other sheet lining materials.
- Used externally of the building envelope.
- Exposed to temperatures of 52ºC or greater for prolonged periods. (Refer to appliance and fitting manufacturer's for installation details.)

7.3 GIB Aqualine® may be substituted for some other GIB® Plasterboard products in specific GIB® Bracing Systems, GIB® Fire Rated Systems, GIB® Noise Control Systems and GIB Ultraline® PLUS Lining System.

Wet Areas

7.4 Wet areas are spaces where sanitary fixture and sanitary appliances are located such as bathrooms, toilets, laundries and kitchens. There are two general categories of wet areas as follows:

1. Water Splash – These are areas subject to intermittent splashing of water such as around baths, vanities, tubs and sinks.
2. Shower Areas – These are areas subject to frequent and heavy water splash such as enclosed showers, unenclosed shower zones and showers over baths.

7.5 Both the above wet area categories must be finished with surfaces and joints that are impervious and easily cleaned. Shower areas must additionally be waterproof. This can be achieved using proprietary rigid shower lining systems, flexible vinyl shower wall finish, or tiling. Tiled shower areas must include a wet area waterproofing membrane system under the tiles.

Intertenancy Walls – Wet Areas

7.6 Intertenancy drywall constructions that incorporate fire resistance and noise control must be protected from water splash. In shower areas GIB Aqualine® must not be substituted for other GIB® Plasterboards but must be an extra lining layer. Refer to the GIB Aqualine® Wet Area Systems Technical Literature.

Tiling

7.7 GIB Aqualine® is suitable as a substrate for tiling up to the following weights:

- 10 mm GIB Aqualine® up to 20kg/m^2
- 13 mm GIB Aqualine® up to 32kg/m^2.

Note: Most ceramic and porcelain wall tiles weigh less than 20kg/m². For further information on tiling consult the BRANZ Good Practice Guide – Tiling.

Framing

7.8 Supporting framing must comprise one of the following subject to the minimum sizes, dwang centres and all other frame requirements of GIB Aqualine® Wet Area Systems Technical Literature:

- Timber framing must be designed and constructed in accordance with NZS 3604, or to a specific design using NZS 3603 and AS/NZS 1170.
- Steel framing must be designed to withstand loads in accordance with AS/NZS 1170.

Structure

Bracing

8.1 GIB Aqualine® can be used in place of GIB® Standard plasterboard in GIB® bracing elements. GIB Aqualine® can be used in place of GIB Braceline® in GIB® bracing elements 900 mm or longer, provided the perimeter of the element is fixed with GIB Braceline® Nails or GIB Braceline® screws at 100 mm centres, using the GIB Braceline® corner fixing pattern.

8.2 GIB Aqualine® must not be used for bracing in shower areas or behind baths.

Impact Resistance

8.3 GIB® plasterboards provide adequate resistance to soft body impact, based upon experience of use in domestic and light commercial applications.

Durability

Serviceable Life

9.1 GIB Aqualine® has a serviceable life of at least 15 years as a fully protected shower or water splash lining. As a general wall and ceiling lining GIB Aqualine® will have a serviceable life in excess of 50 years. The ability of GIB Aqualine® to remain durable is dependent on being protected and remaining dry in service, and being maintained in accordance with this Appraisal.

Maintenance

9.2 The building must be maintained weathertight and all lining systems protected from internal and external moisture.

9.3 Finishes to water splash and shower areas, including tiles, grout, waterproof membranes, sealants and flexible sheet vinyl must be checked to ensure the integrity of the system is maintained. They must be repaired or replaced if necessary. When repairing or replacing finishes, the GIB Aqualine® substrate must be checked for defects and repaired or replaced, as required.

9.4 For flexible sheet vinyl, particular attention must be paid to joints especially at corners. Checks should be made to ensure the vinyl has not been punctured. Where damage has occurred, repairs must be made immediately.

9.5 Impact damage to GIB Aqualine® plasterboard, resulting in small holes and cracks, may be patched, stopped and finished. For larger areas of damage, expert advice on repair must be sought from Winstone Wallboards Ltd.

Outbreak of Fire

10.1 Separation or protection must be provided to GIB Aqualine® Wet Area Systems from heat sources such as stoves, heaters, flues and chimneys.

10.2 NZBC Acceptable Solution C/AS1, Part 9 and Verification Method C/VM1 provide methods for separation and protection of combustible materials from heat sources.

Spread of Fire

11.1 When 10 mm GIB Aqualine® is substituted into fire rated systems in place of 10 mm GIB Fyreline®, the FRR of that system will be maintained. Similarly, the FRR is maintained when 13 mm GIB Aqualine® is substituted for 13 mm GIB Fyreline®.

Flame Barrier

12.1 Where flame barriers are required by Acceptable Solution C/AS1 Table 6.3, GIB Aqualine® is a suitable material to provide a 10 minute flame barrier, provided all sheet joints are formed over framing, or backblocked with GIB® plasterboard.

Internal Moisture

13.1 When installed in accordance with this Appraisal, GIB Aqualine® Wet Area Systems will provide wall surfaces adjacent to sanitary fixtures and sanitary appliances that are impervious and easily cleaned.

13.2 The construction methods meet with the internal moisture requirements of the NZBC Acceptable Solution E3/AS1.

13.3 To minimise internal condensation, adequate levels of ventilation and thermal resistance must be provided to all spaces where moisture may be generated.

Airborne and Impact Sound

14.1 When GIB Aqualine® is substituted into GIB® Noise Control systems in place of the equivalent thickness GIB® Standard plasterboard or GIB Fyreline®, the STC and IIC rating of that system will be maintained. When GIB Aqualine® is substituted in place of the equivalent thickness GIB Noiseline®, a small performance loss may occur.

Installation Information

Installation Skill Level Requirement

15.1 Installation of GIB Aqualine® Wet Area Systems can be carried out by any competent building contractor.

General

16.1 GIB Aqualine® Wet Area Systems must be installed in accordance with the Technical Literature. For inspection, reference must be made to the Technical Literature.

Cutting

16.2 GIB Aqualine® is easily cut by scoring the face paper with a sharp short-bladed trimming knife, and then snapping the plasterboard away from the cut face and cutting the back paper or by sawing. Use of a metal straightedge facilitates clean straight cuts. Cut edges can be tidied up by using a knife. Paper dags should be removed.

Health and Safety

16.3 Dust resulting from the sanding of stopping and finishing compounds may be a respiratory irritant, and the use of a suitable facemask is recommended.

Framing

16.4 To achieve an acceptable decorative finish, GIB Aqualine® Wet Area Systems and the GIB® Site Guide specifies that walls must not be lined unless the moisture content of timber framing is less than 18%. Winstone Wallbaords Limited recommend a moisture content of 8–12% where buildings are to be air conditioned or centrally heated.

Fixing Sheets

Non-Tiled Areas

17.1 GIB Aqualine® sheets may be installed vertically or horizontally. Sheets are fixed with GIB® Grabber® screws or GIB® Nails at 300 mm centres around the perimeter of the sheet, and with GIBFix® adhesive on all intermediate studs and dwangs. Adhesive must not be used under fasteners. A 5-10 mm gap must be left between the floor and the bottom of the sheet.

Tiled Areas

17.2 Control joints must be provided at maximum 4 m centres.
Internal corners in shower areas must be reinforced with a minimum 32 x 32 x 0.55 mm galvanised metal angle prior to lining the walls.
17.3 GIB Aqualine® sheets may be installed vertically or horizontally. Sheets are fixed with GIB® Grabber® screws at 100 mm centres to perimeter of wall and to all intermediate studs. Adhesive must not be used in place of screws.

Ceilings

17.4 Supports of timber or steel battens or ceiling joists must be 450 centres for 10 mm GIB Aqualine®, or 600 mm centres for 13 mm GIB Aqualine®.
17.5 GIB Aqualine® sheets must be fixed with GIB® Grabber® screws at 600 mm centres around perimeter and at 200 mm centre along supports. Alternatively, sheets are screw fixed at 600 mm centres along the supports and GIBFix® adhesive fixed at 200 mm centre between.

Penetrations and Sealants

18.1 All cut-outs for pipe penetrations must be made neatly using a hole saw. Cut-outs should be made approximately 12 mm diameter greater than the pipe.
18.2 A bead of silicone sealant must be placed to the full thickness of the GIB Aqualine® sheet around all pipe penetrations, at bath rims and preformed shower bases and where an impervious junction is required at the floor/wall line.
18.3 In tiled areas, a bead of silicone sealant 6 mm wide must also be placed to the full thickness of the tiles where the above situation occurs. The sealant manufacturer's technical literature must be followed for installation.

Jointing and Finishing

19.1 Jointing must be carried out in accordance with GIB® Site Guide Technical Literature.
19.2 Tiled shower areas must incorporate a waterproofing membrane over GIB Aqualine®. Waterproofing membranes are outside the scope of this Appraisal and must otherwise be specified and approved.

Investigations

20.1 The GIB Aqualine® Wet Area Systems and GIB® Site Guide Technical Literature have been examined by BRANZ and found to be satisfactory.
20.2 Site visits were carried out by BRANZ to assess the practicability of the installation of the systems, and to view completed installations.
20.3 An assessment was made of the durability of the systems by BRANZ technical experts and found to be satisfactory.
20.4 Winstone Wallboards Limited GIB® plasterboards have been assessed for the following properties: MOR, MOE, paper tensile strength, paper shear strength, nail pull resistance, Hunter hardness, inspection for fungal spores, hard and soft body impact tests.

Quality

21.1 Winstone Wallboards Limited's manufacturing process and details of the quality and composition of the materials, have been examined by BRANZ and found to be satisfactory.
The quality management systems of Winstone Wallboards Limited have been assessed and registered by TELARC as meeting the requirements of ISO 9001, Registration No. 581.
Winstone Wallboards Limited is responsible for the quality of the product supplied.
21.2 The quality of the application and finish on site is the responsibility of the installation, stopping and finishing contractors.
21.3 Designers are responsible for the design of buildings.
21.4 Building owners are responsible for the maintenance in accordance with the instructions of Winstone Wallboards Limited.

Sources of Information

- AS/NZS 1170: 2002 Structural design actions.
- AS/NZS 2588: 1998 Gypsum Plasterboard.
- NZS 3602: 2003 Timber and wood-based products for use in building.
- NZS 3603: 1993 Timber structures standard.
- NZS 3604: 2011 Timber-framed buildings.
- BRANZ Good Practice Guide - Tiling, March 2004.
- New Zealand Building Code Handbook and Approved Documents, Building Industry Authority, 1992.
- The Building Regulations 1992, up to, and including October 2004 Amendment.

In the opinion of BRANZ, GIB Aqualine® Wet Area Systems are fit for purpose and will comply with the Building Code to the extent specified in this Appraisal provided they are used, designed, installed and maintained as set out in this Appraisal.

The Appraisal is issued only to the Client, Winstone Wallboards Limited, and is valid until further notice, subject to the Conditions of Appraisal.

Conditions of Appraisal

1. This Appraisal:
a) relates only to the product as described herein;
b) must be read, considered and used in full together with the technical literature;
c) does not address any Legislation, Regulations, Codes or Standards, not specifically named herein;
d) is copyright of BRANZ.
2. The Client:
a) continues to have the product reviewed by BRANZ;
b) shall notify BRANZ of any changes in product specification or quality assurance measures prior to the product being marketed;
c) abides by the BRANZ Appraisals Services Terms and Conditions.
3. The product and the manufacture are maintained at or above the standards, levels and quality assessed and found satisfactory by BRANZ.
4. BRANZ makes no representation as to:
a) the nature of individual examples of, batches of, or individual installations of the product, including methods and workmanship;
b) the presence or absence of any patent or similar rights subsisting in the product or any other product;
c) any guarantee or warranty offered by the Client.
5. Any reference in this Appraisal to any other publication shall be read as a reference to the version of the publication specified in this Appraisal.

For BRANZ

P Robertson
Chief Executive

Date of issue: 4 April 2007

Amendment No. 1, dated 29 April 2010.
This Appraisal has been amended to include a new adhesive, GIBFix® One, and to update reference to AS/NZS 1170.
Amendment No. 2, dated 31 January 2012.
This Appraisal has been amended to update reference to NZS 3604: 2011.

G.J. Gardner HOMES

NEW HOME FOR

EDGE & RANDELL

AT

LOT 8 SAMPSONS WAY
DARGAVILLE

INDEX

PLAN	LAYOUT NAME
1	SITE PLAN
2	FLOOR PLAN
3	ELEVATIONS
4	ELEVATIONS
5	ELECTRICAL PLAN
6	PLUMBING & DRAINAGE
7	PLUMBING & DRAINAGE AS-BUILT
8	WALL FRAMING PLAN
9	BRACING PLAN
10	BRACING CALCULATIONS
11	LINTEL & BEAM PLAN
12	TRUSS DESIGN
13	ROOF PLAN
14	SECTIONS
15	DETAILS - WALL FRAMING SET OUT
16	DETAILS - FRAMING FIXINGS
17	DETAILS - CLADDING
18	DETAILS - CLADDING
19	DETAILS - CLADDING
20	DETAILS - CLADDING
21	DETAILS - CLADDING
22	DETAIL - WET AREA
23	FOUNDATION
24	DETAILS - FOUNDATION
25	DETAILS - FOUNDATION
26	DETAILS - FOUNDATION

ARTISTS IMPRESSION ONLY. 3D HOUSE SHOWN INDICATIVE FROM PLANS. COLOURS AND FINISHES TO BE SELECTED SEPERATELY.

SHAPE SITE TO ASSIST IN STORMWATER RUN-OFF AWAY FROM THE BUILDING PLATFORM

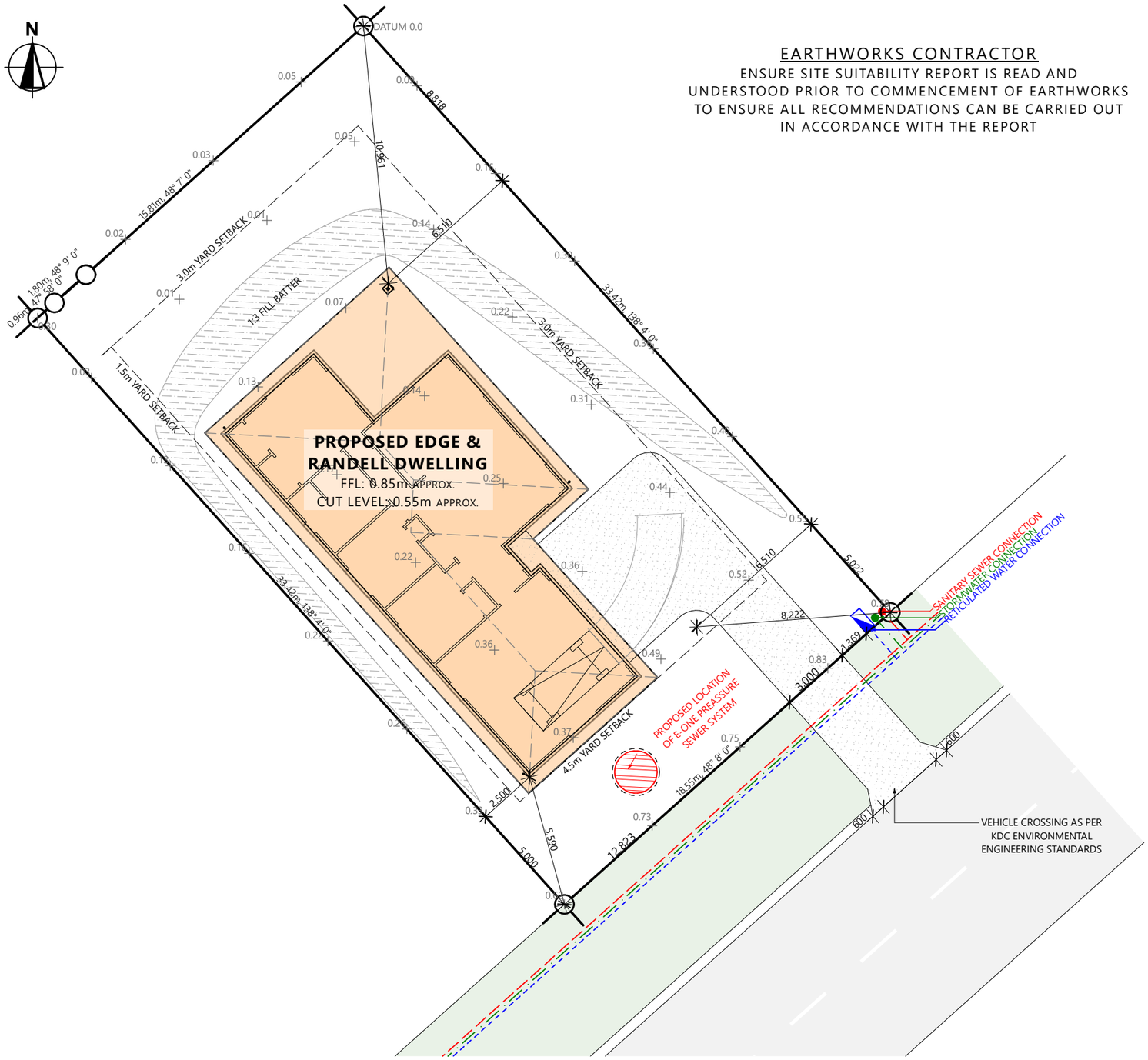

EARTHWORKS CONTRACTOR

ENSURE SITE SUITABILITY REPORT IS READ AND UNDERSTOOD PRIOR TO COMMENCEMENT OF EARTHWORKS TO ENSURE ALL RECOMMENDATIONS CAN BE CARRIED OUT IN ACCORDANCE WITH THE REPORT

SITE LOCATION

DISTRICT PLAN

ZONE:	RESIDENTIAL
BUILDING COVERAGE	**PERMITTED**
MAX ALLOWED **35%** OF 619m² SITE	
FLOOR AREA O/FOUNDATION:	**145.0m²**
FLOOR AREA O/FRAMING:	138.0m²
ACTUAL BUILDING COVERAGE:	**23%**
IMPERMEABLE AREA	**PERMITTED**
HOUSE AREA OVER EAVES:	190.8m²
CONCRETE DRIVE/PATH (NOT UNDER EAVES):	58.2m²
TOTAL IMPERMEABLE:	249.0m²
TOTAL IMPERMEABLE COVERAGE:	**40%**

EARTHWORKS

SILT CONTROL

85m² OF TROWEL FINISHED CONCRETE WITH 5kg/m³ BLACK OXIDE INCLUDED BY G.J'S

DRIVEWAY	81m²

TOTAL SHOWING 81m²

40% IMPERMIABLE SITE COVERAGE REACHED WITH 4m² CONCRETE REMAINING, AVAILABLE TO COVERED AREAS ONLY.

SITE CONCEPT ONLY - SUBJECT TO ENGINEERS APPROVAL

G.J. Gardner. HOMES

COPYRIGHT - THIS DRAWING REMAINS THE PROPERTY OF G.J. GARDNER HOMES AND IS PROVIDED FOR THE USE DESCRIBED AND MAY NOT BE USED OR REPRODUCED IN WHOLE OR IN PART WITHOUT PERMISSION

SUDFELT CONSTRUCTION LTD
WHANGAREI / KAIPARA
FRANCHISEE FOR
G.J.GARDNER HOMES
14 PERCY STREET,
KENSINGTON
P (09) 437 5666
www.gjgardner.co.nz

ALL CONSTRUCTION TO COMPLY WITH THE LOCAL AUTHORITY REQUIREMENTS, NZ BUILDING CODE/APPROVED DOCUMENTS, AND MEANS OF COMPLIANCE, INCL. NZS3604:2011

ALL DIMENSION AND LEVELS ARE TO BE CHECKED BY CONTRACTOR PRIOR TO COMMENCEMENT OF WORK. CONTRACTOR TO REPORT ANY DISCREPANCY.

DO NOT SCALE OFF PLANS

NEW DWELLING FOR

EDGE & RANDELL

LOT 8 SAMPSONS WAY
DARGAVILLE
KAIPARA

CONSENT

LEGAL DESCRIPTION

LOT NUMBER:	DP NUMBER:
8	**542244**

SITE INFORMATION

SITE AREA:	CORROSION:
619m²	**C**
DISTRICT PLAN ZONE:	WIND ZONE:
RESIDENTIAL	**HIGH**

SITE PLAN

JOB No:	**390076**
SHEET SIZE:	**A3**
SCALE:	**1:200, 1:1000, 1:100, 1:1**
DRAWN:	**C. LIENERT**
PUBLISHED:	**30/03/2021**

SHEET: 1

CHECKED: MS

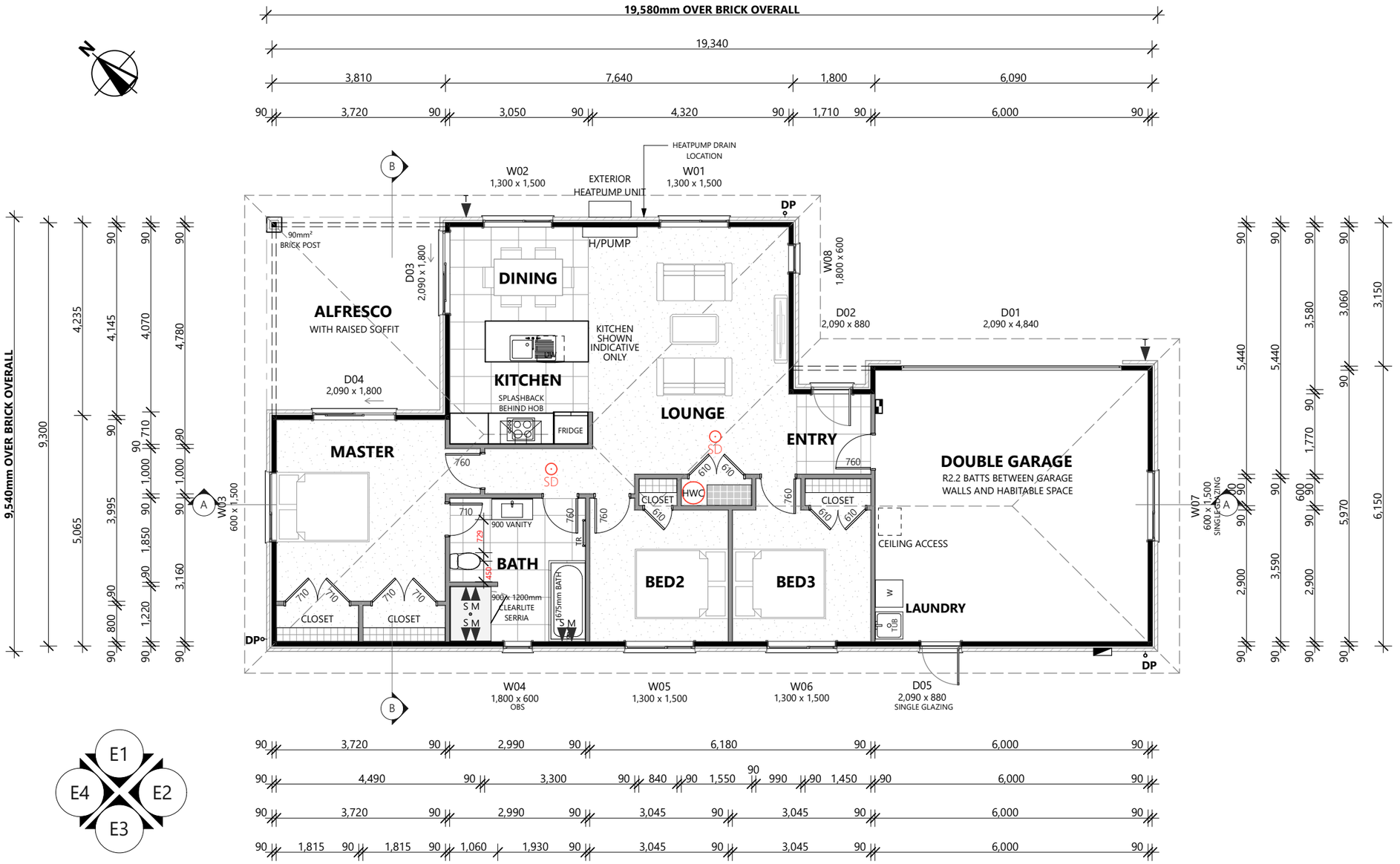

FLOOR PLAN NOTES

FLOOR AREAS (PORCH NOT INCLUDED)

FLOOR AREA O/FRAMING:	138.0m²
FLOOR AREA O/FOUNDATION:	145.0m²
ROOF PLAN AREA:	190.8m²
EXTERNAL STUD HEIGHT	2440mm
INTERNAL STUD HEIGHT	2410mm

FLOOR KEY

- TILED AREA
- UNSEALED ORIGINAL CONCRETE SLAB
- CARPET AREA SELECTED FROM BUILDERS RANGE

SD 9V SMOKE DETECTOR
TO BE WITHIN 3.0M FROM BEDROOM DOORS AND BEFORE AN ESCAPE PATH MAY BECOME BLOCKED BY SMOKE.

S SPOUT
M MIXER
T EXTERNAL TAP

WALL FRAMING KEY

- EXTERNAL 90mm TIMBER FRAME WITH SELECTED 70 SERIES BRICK VENEER OVER A 50mm CAVITY. SELECTED FIBRE CEMENT BEVEL BACK WEATHERBOARD OVER A 20mm CAVITY ABOVE JOINERY IN ALFRESCO (ALL EXCEPT GARAGE INSULATED)
- INTERNAL 90mm LOAD BEARING WALL
- INTERNAL 90mm NON-LOAD BEARING WALL

REFER TO WALL FRAMING PLAN TO FRAMING SIZE, SETOUT, GRADE AND TIMBER TREATMENT. REFER TO ELEVATIONS FOR CLADDING SPECIFICATIONS.

EXPRESS SPECIFICATION SHELVING

- 3 x OXYGENE VENTILATED WIRE SHELVES IN SILVER LINEN SHELVES
- 1 x WARDROBE OXYGENE VENTILATED WIRE SHELF IN SILVER

DIMENSIONS SHOWN ARE TO WALL FRAMING ONLY

G.J. Gardner. HOMES

COPYRIGHT - THIS DRAWING REMAINS THE PROPERTY OF G.J. GARDNER HOMES AND IS PROVIDED FOR THE USE DESCRIBED AND MAY NOT BE USED OR REPRODUCED IN WHOLE OR IN PART WITHOUT PERMISSION

SUDFELT CONSTRUCTION LTD
WHANGAREI / KAIPARA
FRANCHISEE FOR
G.J.GARDNER HOMES
14 PERCY STREET,
KENSINGTON
P (09) 437 5666
www.gjgardner.co.nz

ALL CONSTRUCTION TO COMPLY WITH THE LOCAL AUTHORITY REQUIREMENTS, NZ BUILDING CODE/APPROVED DOCUMENTS, AND MEANS OF COMPLIANCE, INCL. NZS3604:2011

ALL DIMENSION AND LEVELS ARE TO BE CHECKED BY CONTRACTOR PRIOR TO COMMENCEMENT OF WORK. CONTRACTOR TO REPORT ANY DISCREPANCY.

DO NOT SCALE OFF PLANS

NEW DWELLING FOR
EDGE & RANDELL
LOT 8 SAMPSONS WAY
DARGAVILLE
KAIPARA

CONSENT

LEGAL DESCRIPTION
LOT NUMBER: **8**
DP NUMBER: **542244**

SITE INFORMATION
SITE AREA: **619m²**
CORROSION: **C**
DISTRICT PLAN ZONE: **RESIDENTIAL**
WIND ZONE: **HIGH**

FLOOR PLAN

JOB No:	**390076**
SHEET SIZE:	**A3**
SCALE:	**1:100**
DRAWN:	**C. LIENERT**
PUBLISHED:	**30/03/2021**

SHEET: 2
CHECKED: MS

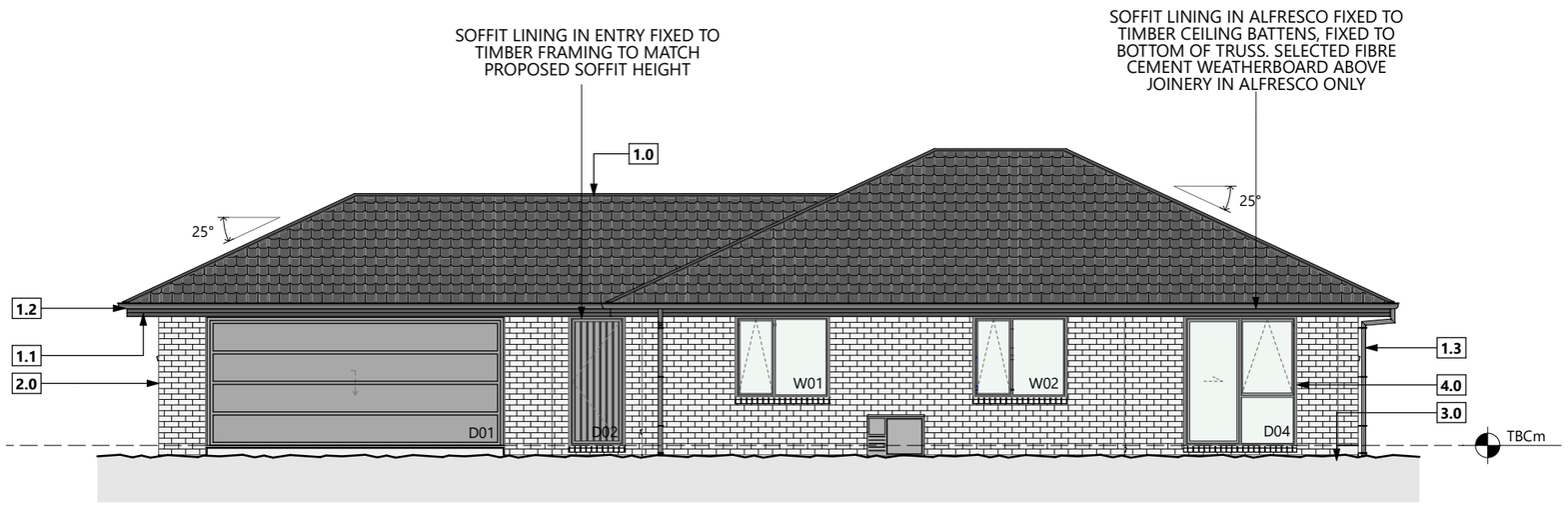

Elevation 1

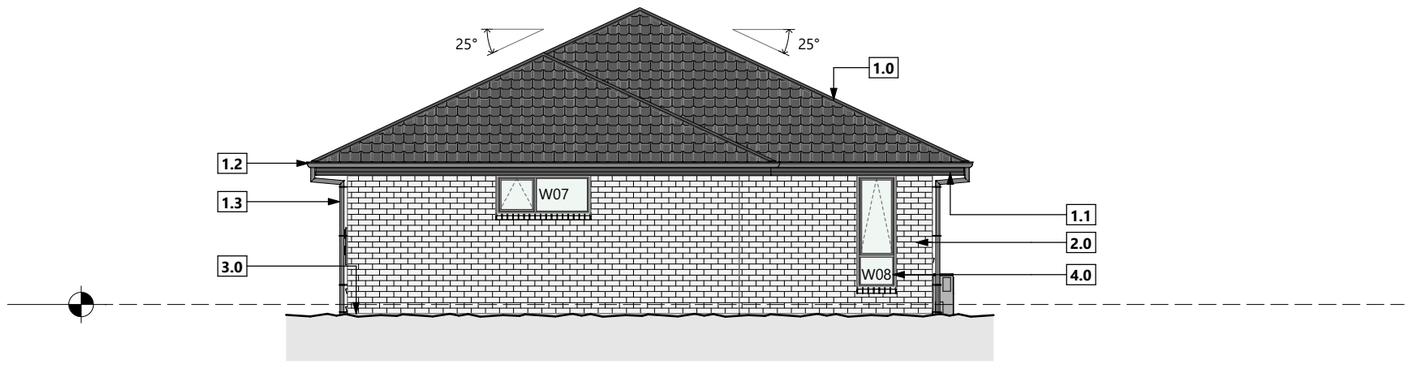

Elevation 2

ELEVATION NOTES:

1.0 GERARD PRESSED METAL TILE ROOF OVER BATTENS OVER SELECTED ROOFING UNDERLAY

1.1 SELECTED FIBRE CEMENT 4.5mm SOFFIT LINING

1.2 CONTINUOUS SPOUTING QUARTER ROUND GUTTER ON COLORSTEEL FASCIA

1.3 80mmø ROUND uPVC DOWNPIPES

2.0 SELECTED 70 SERIES BRICK VENEER OVER A 50mm DRAINED CAVITY OVER SELECTED BREATHER TYPE BUILDING PAPER. BRICK VENEER SELECTED FROM BUILDERS RANGE

3.0 FIRTH RIBRAFT SLAB - REFER TO FOUNDATION PLAN FOR DETAILS

4.0 SELECTED POWDERCOATED ALUMINIUM JOINERY, ALL GLASS WINDOWS AND DOORS ARE TO BE DOUBLE GLAZED. ALL GLASS TO MEET NZS4223 SAFETY GLAZING.

BRICK TIES / WEEPHOLES:

BRICK TIES TO BE POSITIONED AS FOLLOWS

- 600mm HORIZONTALLY/ 400mm VERTICALLY
- WITHIN 200mm AROUND OPENING
- WITHIN THE TOP 2 MORTAR COURSES
- WITHIN THE BOTTOM 400mm OF VENEER
- TIES FOR 50mm CAVITY AND 70mm BRICK VENEER TO BE 105/115mm
- EVERY THIRD PERPEND TO BE LEFT OPEN ON THE SECOND COURSE FOR DRAINAGE/ VENTILATION
- LEAVE 3mm GAP TO SOFFIT OR LEAVE EVERY THIRD PERPEND OPEN
- VENTING IS REQUIRED UNDER OPENINGS WIDER THAN 2.4m

G.J. Gardner. HOMES

COPYRIGHT - THIS DRAWING REMAINS THE PROPERTY OF G.J. GARDNER HOMES AND IS PROVIDED FOR THE USE DESCRIBED AND MAY NOT BE USED OR REPRODUCED IN WHOLE OR IN PART WITHOUT PERMISSION

SUDFELT CONSTRUCTION LTD
WHANGAREI / KAIPARA
FRANCHISEE FOR
G.J.GARDNER HOMES
14 PERCY STREET,
KENSINGTON
P (09) 437 5666
www.gjgardner.co.nz

ALL CONSTRUCTION TO COMPLY WITH THE LOCAL AUTHORITY REQUIREMENTS, NZ BUILDING CODE/APPROVED DOCUMENTS, AND MEANS OF COMPLIANCE, INCL. NZS3604:2011

ALL DIMENSION AND LEVELS ARE TO BE CHECKED BY CONTRACTOR PRIOR TO COMMENCEMENT OF WORK. CONTRACTOR TO REPORT ANY DISCREPANCY.

DO NOT SCALE OFF PLANS

NEW DWELLING FOR
EDGE & RANDELL
LOT 8 SAMPSONS WAY
DARGAVILLE
KAIPARA

CONSENT

LEGAL DESCRIPTION
LOT NUMBER: **8**
DP NUMBER: **542244**

SITE INFORMATION
SITE AREA: **619m²**
CORROSION: **C**
DISTRICT PLAN ZONE: **RESIDENTIAL**
WIND ZONE: **HIGH**

ELEVATIONS

JOB No: **390076**
SHEET SIZE: **A3**
SCALE: **1:100**
DRAWN: **C. LIENERT**
PUBLISHED: **30/03/2021**
SHEET: 3
CHECKED: MS

Elevation 3

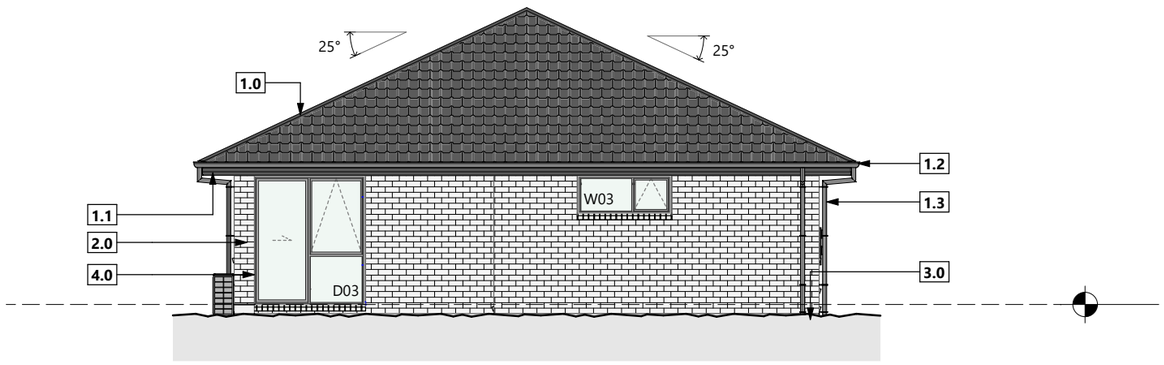

Elevation 4

ELEVATION NOTES:

1.0 GERARD PRESSED METAL TILE ROOF OVER BATTENS OVER SELECTED ROOFING UNDERLAY

1.1 SELECTED FIBRE CEMENT 4.5mm SOFFIT LINING

1.2 CONTINUOUS SPOUTING QUARTER ROUND GUTTER ON COLORSTEEL FASCIA

1.3 80mmø ROUND uPVC DOWNPIPES

2.0 SELECTED 70 SERIES BRICK VENEER OVER A 50mm DRAINED CAVITY OVER SELECTED BREATHER TYPE BUILDING PAPER. BRICK VENEER SELECTED FROM BUILDERS RANGE

3.0 FIRTH RIBRAFT SLAB - REFER TO FOUNDATION PLAN FOR DETAILS

4.0 SELECTED POWDERCOATED ALUMINIUM JOINERY, ALL GLASS WINDOWS AND DOORS ARE TO BE DOUBLE GLAZED. ALL GLASS TO MEET NZS4223 SAFETY GLAZING.

BRICK TIES / WEEPHOLES:

BRICK TIES TO BE POSITIONED AS FOLLOWS

- 600mm HORIZONTALLY/ 400mm VERTICALLY
- WITHIN 200mm AROUND OPENING
- WITHIN THE TOP 2 MORTAR COURSES
- WITHIN THE BOTTOM 400mm OF VENEER
- TIES FOR 50mm CAVITY AND 70mm BRICK VENEER TO BE 105/115mm
- EVERY THIRD PERPEND TO BE LEFT OPEN ON THE SECOND COURSE FOR DRAINAGE/ VENTILATION
- LEAVE 3mm GAP TO SOFFIT OR LEAVE EVERY THIRD PERPEND OPEN
- VENTING IS REQUIRED UNDER OPENINGS WIDER THAN 2.4m

G.J. Gardner. HOMES

COPYRIGHT - THIS DRAWING REMAINS THE PROPERTY OF G.J. GARDNER HOMES AND IS PROVIDED FOR THE USE DESCRIBED AND MAY NOT BE USED OR REPRODUCED IN WHOLE OR IN PART WITHOUT PERMISSION

SUDFELT CONSTRUCTION LTD
WHANGAREI / KAIPARA
FRANCHISEE FOR
G.J.GARDNER HOMES
14 PERCY STREET,
KENSINGTON
P (09) 437 5666
www.gjgardner.co.nz

ALL CONSTRUCTION TO COMPLY WITH THE LOCAL AUTHORITY REQUIREMENTS, NZ BUILDING CODE/APPROVED DOCUMENTS, AND MEANS OF COMPLIANCE, INCL. NZS3604:2011

ALL DIMENSION AND LEVELS ARE TO BE CHECKED BY CONTRACTOR PRIOR TO COMMENCEMENT OF WORK. CONTRACTOR TO REPORT ANY DISCREPANCY.

DO NOT SCALE OFF PLANS

NEW DWELLING FOR
EDGE & RANDELL
LOT 8 SAMPSONS WAY
DARGAVILLE
KAIPARA

CONSENT

LEGAL DESCRIPTION
LOT NUMBER: **8**
DP NUMBER: **542244**

SITE INFORMATION
SITE AREA: **619m²**
CORROSION: **C**
DISTRICT PLAN ZONE: **RESIDENTIAL**
WIND ZONE: **HIGH**

ELEVATIONS

JOB No: **390076**
SHEET SIZE: **A3**
SCALE: **1:100**
DRAWN: **C. LIENERT**
PUBLISHED: **30/03/2021**
SHEET: 4
CHECKED: MS

NOTE:

- EXACT POSITION OF ALL LIGHTS, SWITCHES AND POWER POINTS TO BE DISCUSSED ON SITE BETWEEN CLIENT AND ELECTRICIAN

ELECTRICAL KEY

	DISTRIBUTION BOX	x1
	METER BOX	x1
	LED RECESSED LUMINAIRES	x20
	DOUBLE OUTSIDE FLOODLIGHT WITH SENSOR	x1
2	TWIN POWER OUTLET	x20
F	FRIDGE - SINGLE OUTLET	x1
DW	DISHWASHER - SINGLE OUTLET	x1
R	RANGEHOOD - SINGLE OUTLET	x1
H	HOB - SINGLE OUTLET	x1
O	OVEN - SINGLE OUTLET	x1
PH	PHONE POINT	x2
TV	TV POINT	x2
HW	HOT WATER HEATER - SINGLE OUTLET	x1
HWC	MAIN PRESSURE 180l HOT WATER CYLINDER	x1
	MANROSE HEAT/FAN/LIGHT	x2
SD	SMOKE DETETOR	x2

A DAIKIN FTXM50 CORA HIGH WALL IS INCLUDED TO BE SUPPLIED AND INSTALLED BY GJ's

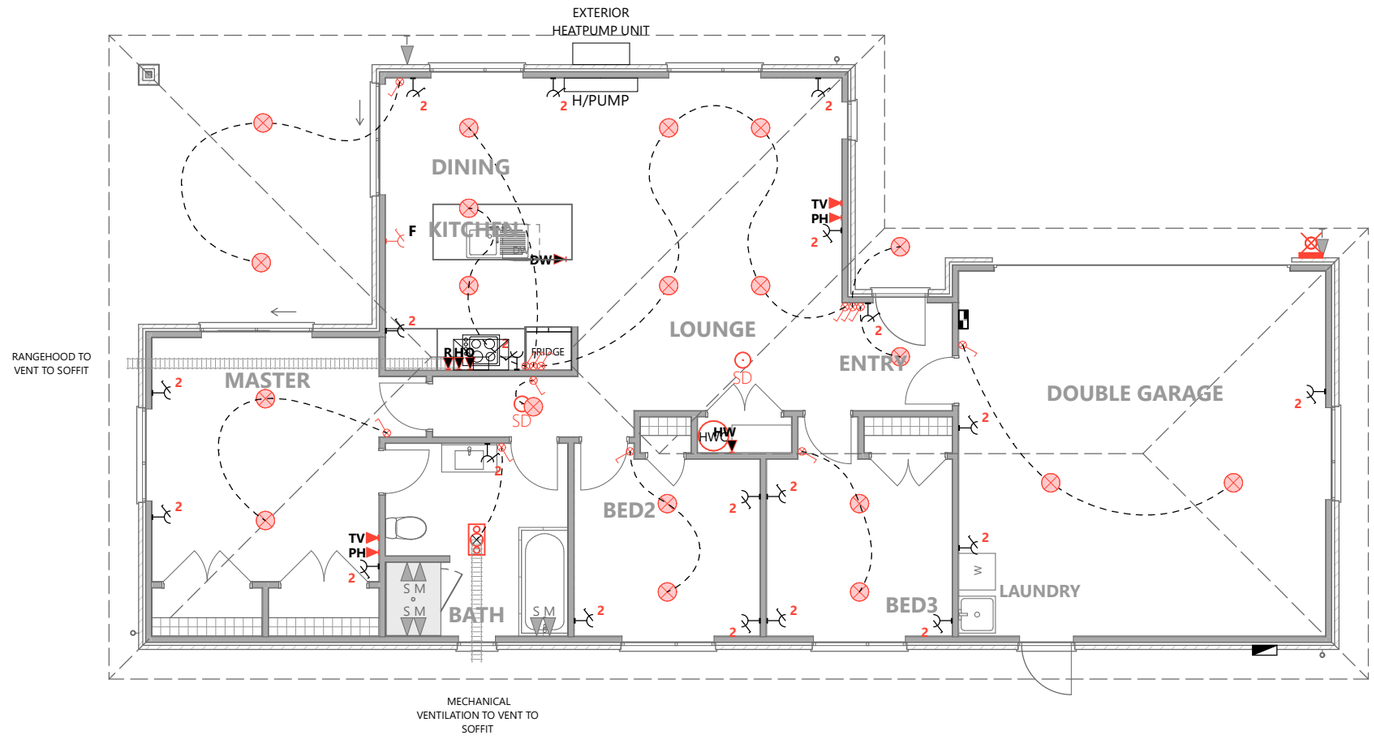

G.J. Gardner. HOMES

COPYRIGHT - THIS DRAWING REMAINS THE PROPERTY OF G.J. GARDNER HOMES AND IS PROVIDED FOR THE USE DESCRIBED AND MAY NOT BE USED OR REPRODUCED IN WHOLE OR IN PART WITHOUT PERMISSION

SUDFELT CONSTRUCTION LTD
WHANGAREI / KAIPARA
FRANCHISEE FOR
G.J.GARDNER HOMES
14 PERCY STREET,
KENSINGTON
P (09) 437 5666
www.gjgardner.co.nz

ALL CONSTRUCTION TO COMPLY WITH THE LOCAL AUTHORITY REQUIREMENTS, NZ BUILDING CODE/APPROVED DOCUMENTS, AND MEANS OF COMPLIANCE, INCL. NZS3604:2011

ALL DIMENSION AND LEVELS ARE TO BE CHECKED BY CONTRACTOR PRIOR TO COMMENCEMENT OF WORK. CONTRACTOR TO REPORT ANY DISCREPANCY.

DO NOT SCALE OFF PLANS

NEW DWELLING FOR
EDGE & RANDELL
LOT 8 SAMPSONS WAY
DARGAVILLE
KAIPARA

CONSENT

LEGAL DESCRIPTION
LOT NUMBER: **8**
DP NUMBER: **542244**

SITE INFORMATION
SITE AREA: **619m²**
CORROSION: **C**
DISTRICT PLAN ZONE: **RESIDENTIAL**
WIND ZONE: **HIGH**

ELECTRICAL PLAN

JOB No: **390076**
SHEET SIZE: **A3**
SCALE: **1:100**
DRAWN: **C. LIENERT**
PUBLISHED: **30/03/2021**
SHEET: 5
CHECKED: MS

REFER TO SITE PLAN FOR SW AND SS CONNECTION POINTS

KEY:

ORG	OVERFLOW RELIEF GULLY
TV	TERMINAL VENT
DP	DOWN PIPE
RE	RODDING EYE
IP	INSPECTION POINT

TABLE 6.5.1
MINIMUM GRADES OF DISCHARGE PIPES

40mm ø	1:40 (2.5%)	25mm PER METER
65mm ø	1:40 (2.5%)	25mm PER METER
100mm ø	1:60 (1.65%)	17mm PER METER

FIXTURES & WASTE PIPE SIZING

WC =	100ø OUTLET
SHOWER =	40ø TRAP TO 65ø WASTE
BASIN =	40ø TRAP TO 65ø WASTE
SINK =	40ø TRAP TO 65ø WASTE
TUB =	40ø TRAP TO 65ø WASTE

NOTES:

PLUMBING TO NZBC G13/AS3 NZS3500.2
ALL WASTE PIPES PVC. SIZES, FALL, VENTING & DISCHARGE TO BE CONFIRMED BY NZ QUALIFIED PLUMBER.

WATER SUPPLY:

INTERNAL WATER PIPES TO BE POLYBUTYLENE

A POTABLE WATER SUPPLY SYSTEM SHALL BE -
(a) PROTECTED FROM CONTAMINATION; AND
(b) INSTALLED IN A MANNER WHICH AVOIDS THE LIKELIHOOD OF CONTAMINATION WITHIN THE SYSTEM AND THE WATER MAIN; AND
(c) INSTALLED USING COMPONENTS THAT WILL NOT CONTAMINATE WATER

TABLE 3.9.3.1
SIZE AND RATING OF VENTS

50ø TV FOR <30 FIXTURE UNITS
65ø TV FOR <175 FIXTURE UNITS

BATHROOM GROUP = 6 (x2)
SINK = 1 (x1)

BASIN = 1 (x1) (ADDITIONAL WC BASIN)

TUB = 5 (x1)
DISHWASHING MACHINE = 3 (x1)

=22

TABLE 4.6.3
MAXIMUM UNVENTED LENGTH OF WASTE PIPE

-BASIN OR BIDET WITH 40ø TRAP AND WASTE	3.5m
-ALL OTHER WASTE FIXTURES AND FLOOR WASTE GULLIES WITH 50ø OR SMALLER WASTE PIPES	6.0m
-FLOOR WASTE GULLIES AND FIXTURES WITH 65ø OR LARGER WASTE PIPES	10.0m

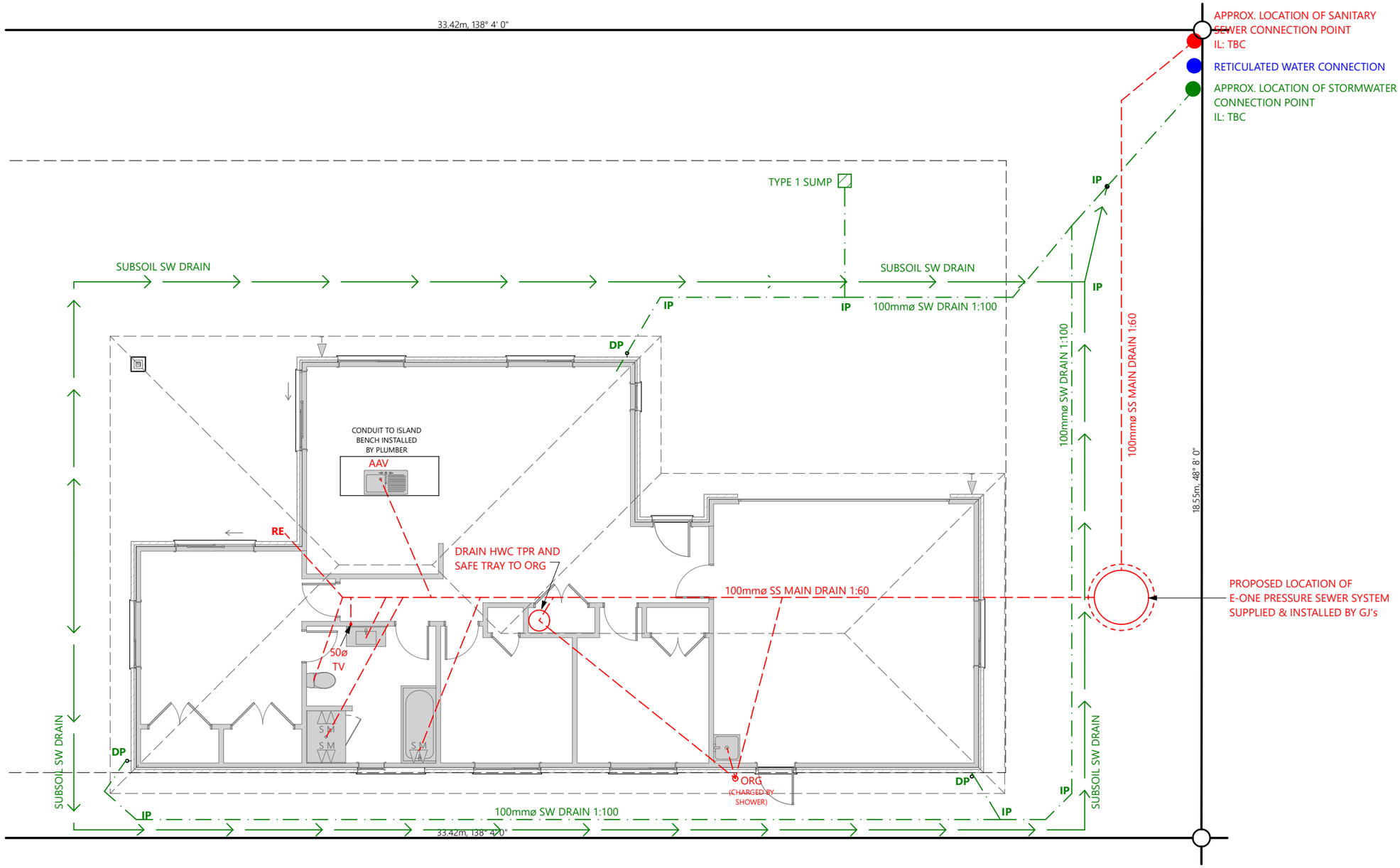

RS Eng Ltd
Consulting Engineers
This drawing is in accordance with our calculations where applicable.
per .....
Chartered Professional Engineer

G.J. Gardner. HOMES

COPYRIGHT - THIS DRAWING REMAINS THE PROPERTY OF G.J. GARDNER HOMES AND IS PROVIDED FOR THE USE DESCRIBED AND MAY NOT BE USED OR REPRODUCED IN WHOLE OR IN PART WITHOUT PERMISSION

SUDFELT CONSTRUCTION LTD
WHANGAREI / KAIPARA
FRANCHISEE FOR
G.J.GARDNER HOMES
14 PERCY STREET,
KENSINGTON
P (09) 437 5666
www.gjgardner.co.nz

ALL CONSTRUCTION TO COMPLY WITH THE LOCAL AUTHORITY REQUIREMENTS, NZ BUILDING CODE/APPROVED DOCUMENTS, AND MEANS OF COMPLIANCE, INCL. NZS3604:2011

ALL DIMENSION AND LEVELS ARE TO BE CHECKED BY CONTRACTOR PRIOR TO COMMENCEMENT OF WORK. CONTRACTOR TO REPORT ANY DISCREPANCY.

DO NOT SCALE OFF PLANS

NEW DWELLING FOR
EDGE & RANDELL
LOT 8 SAMPSONS WAY
DARGAVILLE
KAIPARA

CONSENT

LEGAL DESCRIPTION
LOT NUMBER: **8**
DP NUMBER: **542244**

SITE INFORMATION
SITE AREA: **619m²**
CORROSION: **C**
DISTRICT PLAN ZONE: **RESIDENTIAL**
WIND ZONE: **HIGH**

PLUMBING & DRAINAGE

JOB No: **390076**
SHEET SIZE: **A3**
SCALE: **1:100**
DRAWN: **C. LIENERT**
PUBLISHED: **23/03/2021**
SHEET: 6
CHECKED: MS

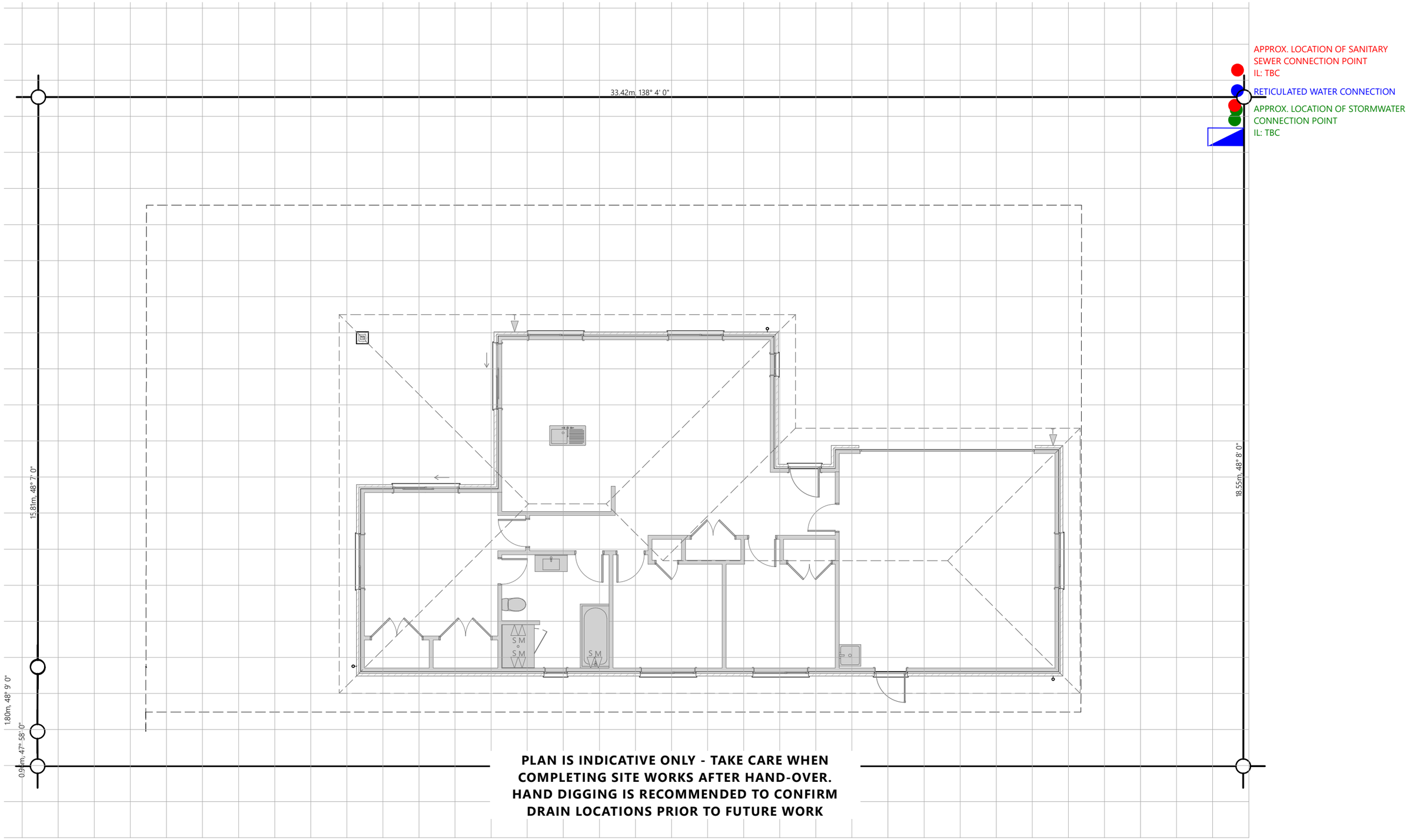

APPROX. LOCATION OF SANITARY SEWER CONNECTION POINT
IL: TBC

RETICULATED WATER CONNECTION

APPROX. LOCATION OF STORMWATER CONNECTION POINT
IL: TBC

PLAN IS INDICATIVE ONLY - TAKE CARE WHEN COMPLETING SITE WORKS AFTER HAND-OVER. HAND DIGGING IS RECOMMENDED TO CONFIRM DRAIN LOCATIONS PRIOR TO FUTURE WORK

GRIDLINES SET OUT AT 1.0M CENTRES

G.J. Gardner. HOMES

COPYRIGHT - THIS DRAWING REMAINS THE PROPERTY OF G.J. GARDNER HOMES AND IS PROVIDED FOR THE USE DESCRIBED AND MAY NOT BE USED OR REPRODUCED IN WHOLE OR IN PART WITHOUT PERMISSION

SUDFELT CONSTRUCTION LTD
WHANGAREI / KAIPARA
FRANCHISEE FOR
G.J.GARDNER HOMES
14 PERCY STREET,
KENSINGTON
P (09) 437 5666
www.gjgardner.co.nz

ALL CONSTRUCTION TO COMPLY WITH THE LOCAL AUTHORITY REQUIREMENTS, NZ BUILDING CODE/APPROVED DOCUMENTS, AND MEANS OF COMPLIANCE, INCL. NZS3604:2011

ALL DIMENSION AND LEVELS ARE TO BE CHECKED BY CONTRACTOR PRIOR TO COMMENCEMENT OF WORK. CONTRACTOR TO REPORT ANY DISCREPANCY.

DO NOT SCALE OFF PLANS

NEW DWELLING FOR

EDGE & RANDELL

LOT 8 SAMPSONS WAY
DARGAVILLE
KAIPARA

CONSENT

LEGAL DESCRIPTION

LOT NUMBER: **8**	DP NUMBER: **542244**

SITE INFORMATION

SITE AREA: **619m²**	CORROSION: **C**
DISTRICT PLAN ZONE: **RESIDENTIAL**	WIND ZONE: **HIGH**

PLUMBING & DRAINAGE AS-BUILT

JOB No:	**390076**
SHEET SIZE:	**A3**
SCALE:	**1:100**
DRAWN:	**C. LIENERT**
PUBLISHED:	**30/03/2021**

SHEET: 7

CHECKED: MS

GENERAL NOTES:
- 2440mm STUD HEIGHT
- 2410mm STUD HEIGHT INTERNAL
(INTERNAL STUD HEIGHT LOWER TO ALLOW FOR CPC80 WALL DROP CONNECTION. LOAD BEARING WALLS TO BE PACKED WHERE REQUIRED)
-EXTERIOR WINDOW AND DOOR TRIM HEAD HEIGHT 2100mm FROM FFL
- ALL WINDOW AND EXTERIOR DOOR DIMENSIONS ARE GIVEN AS TRIM SIZES
- FULL LENGTH WINDOW AND DOOR UNITS TO EXCLUDE TIMBER SILL SECTIONS
- ALL EXTERIOR WINDOWS AND DOOR GLASS ARE TO BE DOUBLE GLAZED TO NZS4223
- ALL INTERIOR DOOR PANELS TO BE 1980mm HIGH, OTHER HEIGHTS AS MARKED ON PLAN
- ROOF PITCH IS **25°**
- SOFFIT O/HANG **600mm** FROM FRAME
- GABLE O/HANG **450mm** FROM FRAME
- NOGS FOR BRICK VENEER & LINEA W/B @ **800mm** CRS
- NOGS BEHIND TILED WALLS @ 400mm CRS

FIXINGS:
TO NZS3604:2011

ALL STEEL FIXINGS & FASTENINGS IN COPPER BASED TIMBER PRESERVATIVES (H3.2 OR HIGHER) SHALL BE AS PER NZS3604:2011 SECTION 4 TABLE 4.1, 4.3 & 4.4.4 SHALL BE A MINIMUM OF:

A) TYPE 304 STAINLESS STEEL FOR FIXINGS IN CONTACT WITH TIMBER TREATED WITH COPPER AZOLE, OR ALKALINE COPPER QUATERNARY (ACQ) PRESERVATIVES. WHERE USED IN EXPOSED OR SHELTERED LOCATIONS

B) HOT-DIPPED GALVANISED FOR ALL OTHER LOCATIONS

TOP PLATE FIXINGS:
LUMBERLOK ENGINEERED ALTERNATIVE SOLUTION TO NZS3604:2011

ALL EXTERNAL WALLS AND LOADBEARING INTERNAL WALLS TO HAVE TYPE 'B' LUMBERLOK STUD TO TOP PLATE FIXING.

ALL INTERNAL NON-LOADBEARING WALLS TO HAVE TYPE 'A' LUMBERLOK STUD TO TOP PLATE FIXING

BOTTOM PLATE FIXINGS:
EXTERNAL AND INTERNAL LOAD BEARING WALLS
PROPRIETARY POST FIXED ANCHOR AS PER NZS3604:2011

M12 x 135 BOLT (MIN.) @ 900mm CRS AND WITHIN 150mm OF EACH END OF PLATE AS PER NZS3604:2011 CLAUSE 7.5.12.2 (ADDITIONAL 50mm FOR BOLTS IN NIBS I.E REBATED SHOWERS ON EXTERNAL WALLS OR ENTRY NIB WALLS)

NON-LOAD BEARING WALLS
PROPRIETARY FIXING AS PER NZS3604:2011 TABLE 8.19

RAMSET 8 x 75 DRIVE PIN & WASHER @600mm CRS

REFER TO BRACING INSTALLATION DETAILS FOR BOTTOM PLATE FIXINGS AT LOCATION OF BRACING COMPONENT

TIMBER TREATMENT SCHEDULE
TO NZS3640:2003

KILN DRIED PINUS RADIATA

EXTERNAL WALLS	SG8	H1.2
INTERNAL WALLS	SG8	H1.2
NON-EXPOSED BEAMS & LINTELS	SG8	H1.2
EXPOSED BEAMS	SG8	H3.2
TRUSSES AND SOFFIT FRAMING	SG8	H1.2
WINDOW AND DOOR REVEALS	SG8	H3.1
VALLEY BOARDS		H3.2
TILE BATTENS		H1.2
POSTS		H5
CAVITY BATTENS		H3.1
ALL FRAMES TO HAVE H1.2 BOTTOM PLATE		

HIGH WIND ZONE

EXTERNAL LOAD BEARING STUDS
UP TO 2.4m - 90 x 45 @ 600mm CRS H1.2 SG8

INTERNAL LOAD AND NON-LOAD BEARING STUDS
UP TO 3.0m - 90 x 45 @ 600mm CRS H1.2 SG8

WALL FRAMING KEY

90mm LOAD BEARING WALL

90mm NON-LOAD BEARING WALL

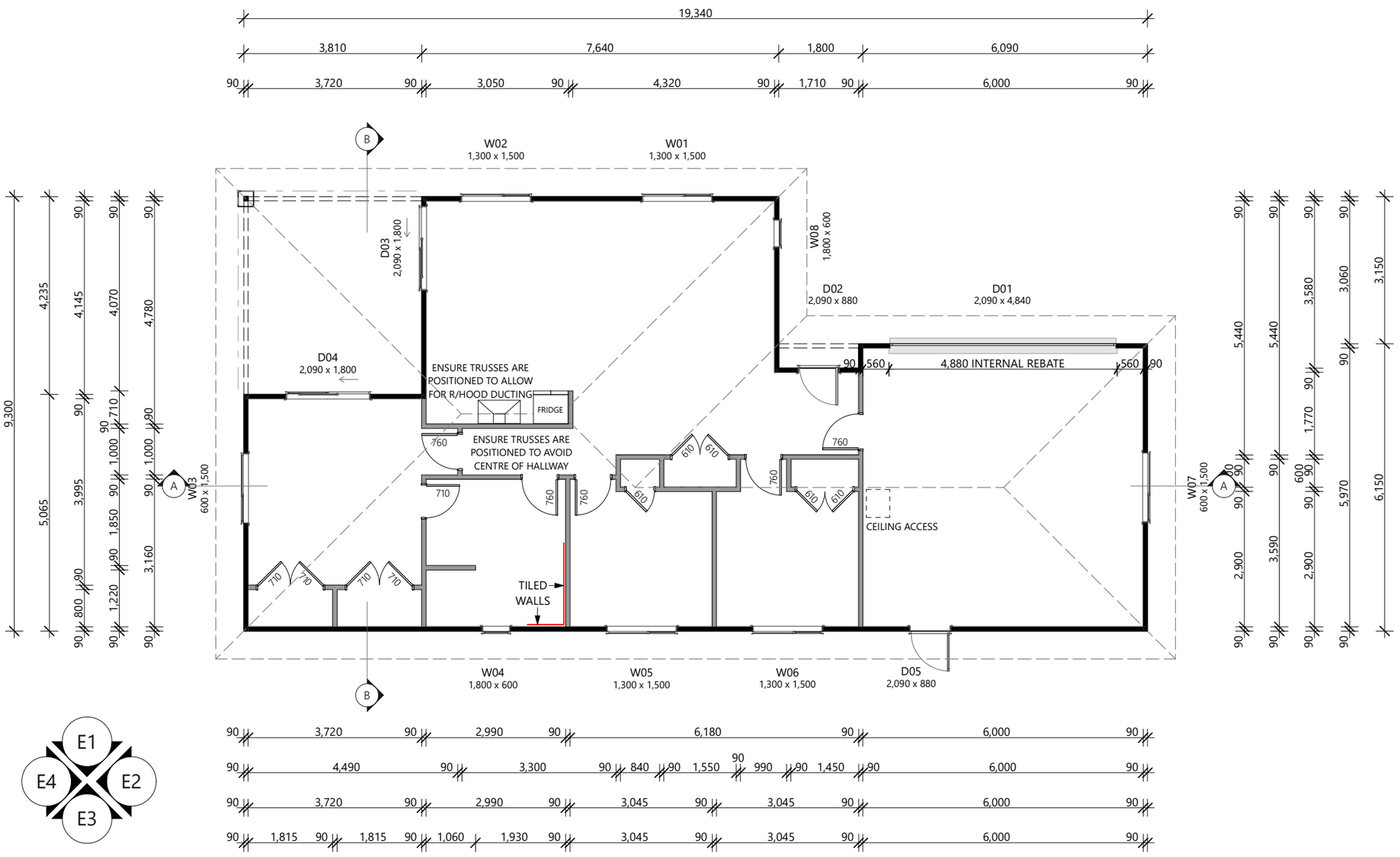

COPYRIGHT - THIS DRAWING REMAINS THE PROPERTY OF G.J. GARDNER HOMES AND IS PROVIDED FOR THE USE DESCRIBED AND MAY NOT BE USED OR REPRODUCED IN WHOLE OR IN PART WITHOUT PERMISSION

G.J. Gardner. HOMES
SUDFELT CONSTRUCTION LTD
WHANGAREI / KAIPARA
FRANCHISEE FOR
G.J.GARDNER HOMES
14 PERCY STREET,
KENSINGTON
P (09) 437 5666
www.gjgardner.co.nz

ALL CONSTRUCTION TO COMPLY WITH THE LOCAL AUTHORITY REQUIREMENTS, NZ BUILDING CODE/APPROVED DOCUMENTS, AND MEANS OF COMPLIANCE, INCL. NZS3604:2011

ALL DIMENSION AND LEVELS ARE TO BE CHECKED BY CONTRACTOR PRIOR TO COMMENCEMENT OF WORK. CONTRACTOR TO REPORT ANY DISCREPANCY.

DO NOT SCALE OFF PLANS

NEW DWELLING FOR
EDGE & RANDELL
LOT 8 SAMPSONS WAY
DARGAVILLE
KAIPARA

CONSENT

LEGAL DESCRIPTION
LOT NUMBER: **8**
DP NUMBER: **542244**

SITE INFORMATION
SITE AREA: **619m²**
CORROSION: **C**
DISTRICT PLAN ZONE: **RESIDENTIAL**
WIND ZONE: **HIGH**

WALL FRAMING PLAN

JOB No: **390076**
SHEET SIZE: **A3**
SCALE: **1:100, 1:105.8381**
DRAWN: **C. LIENERT**
PUBLISHED: **30/03/2021**
SHEET: 8
CHECKED: MS

NOTE:
1. TOP PLATE JOINTS FOR WALLS AT RIGHT ANGLES TO EXTERNAL WALLS ARE AS FOLLOWS:
A) WALLS WITH BRACING ELEMENTS NOT EXCEEDING 125BU REQUIRE A 6kN CAPACITY CONNECTION TO ONE EXTERNAL WALL.
B) WALLS WITH BRACING ELEMENTS NOT EXCEEDING 250BU REQUIRE A 6kN CAPACITY CONNECTION TO TWO EXTERNAL WALLS.
2. TOP PLATE JOINTS FOR ALL WALLS IN LINE THAT HAVE WALL BRACING ELEMENTS EXCEEDING 100BU OR HAVE A CEILING DIAPHRAGM ATTACHED REQUIRE A 6kN CAPACITY CONNECTION AS ABOVE.
3. TOP PLATE JOINTS FOR WALLS AT RIGHT ANGLES AND IN LINE THAT HAVE EITHER NO BRACING ELEMENTS OR ARE ON A SINGLE STORY BUILDING ONLY WITH WALL BRACING DEMANDS NOT EXCEEDING 100BU REQUIRE A 3kN CAPACITY CONNECTION AS ABOVE.

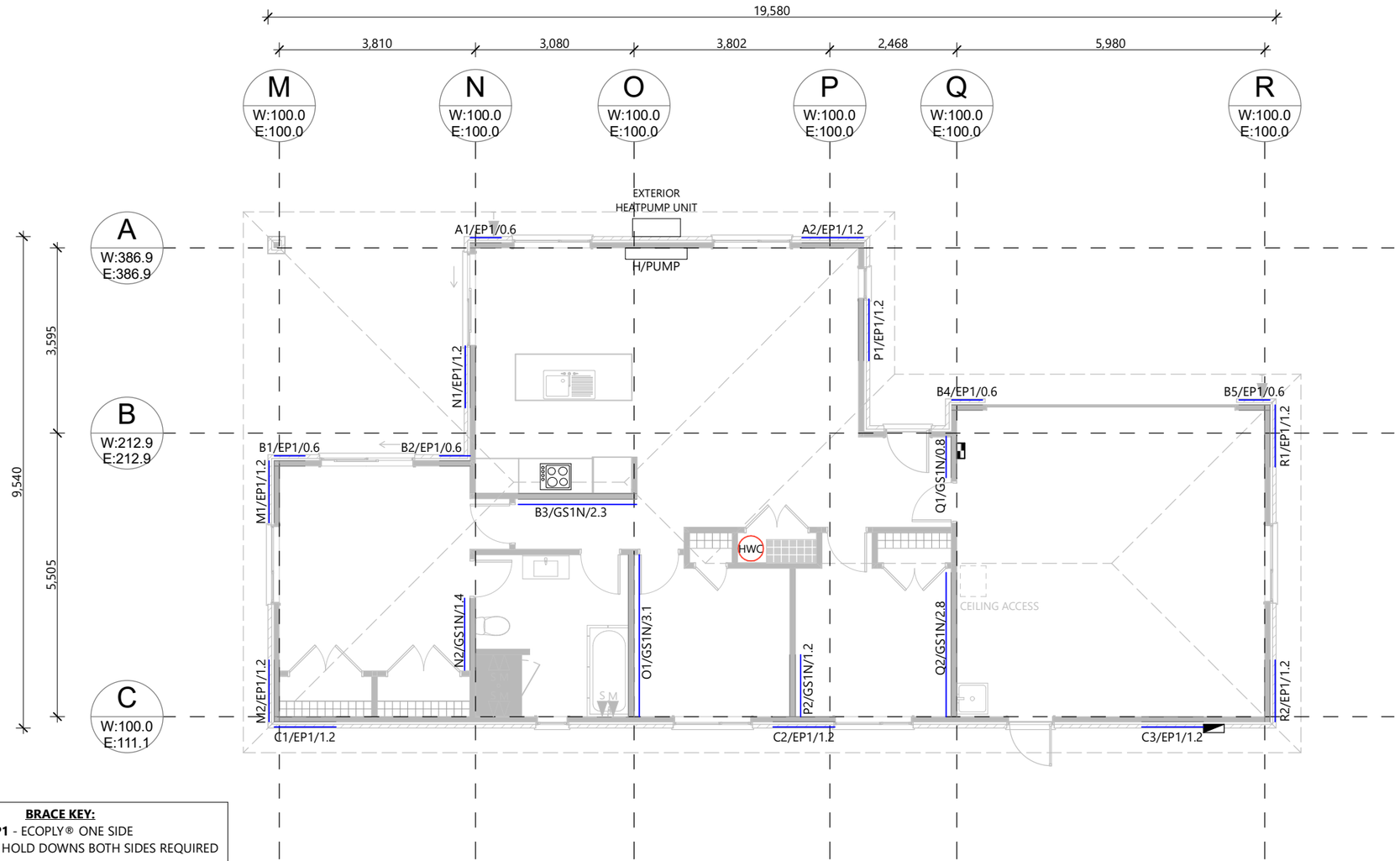

BRACE KEY:
EP1 - ECOPLY® ONE SIDE
- GIB HandiBrac®HOLD DOWNS BOTH SIDES REQUIRED

GS1-N - ANY 10mm OR 13mm GIB® STANDARD PLASTERBOARD TO ONE SIDE ONLY

COPYRIGHT - THIS DRAWING REMAINS THE PROPERTY OF G.J. GARDNER HOMES AND IS PROVIDED FOR THE USE DESCRIBED AND MAY NOT BE USED OR REPRODUCED IN WHOLE OR IN PART WITHOUT PERMISSION

G.J. Gardner. HOMES

SUDFELT CONSTRUCTION LTD
WHANGAREI / KAIPARA
FRANCHISEE FOR
G.J.GARDNER HOMES
14 PERCY STREET,
KENSINGTON
P (09) 437 5666
www.gjgardner.co.nz

ALL CONSTRUCTION TO COMPLY WITH THE LOCAL AUTHORITY REQUIREMENTS, NZ BUILDING CODE/APPROVED DOCUMENTS, AND MEANS OF COMPLIANCE, INCL. NZS3604:2011

ALL DIMENSION AND LEVELS ARE TO BE CHECKED BY CONTRACTOR PRIOR TO COMMENCEMENT OF WORK. CONTRACTOR TO REPORT ANY DISCREPANCY.

DO NOT SCALE OFF PLANS

NEW DWELLING FOR
EDGE & RANDELL
LOT 8 SAMPSONS WAY
DARGAVILLE
KAIPARA

CONSENT

LEGAL DESCRIPTION
LOT NUMBER: **8**
DP NUMBER: **542244**

SITE INFORMATION
SITE AREA: **619m²**
CORROSION: **C**
DISTRICT PLAN ZONE: **RESIDENTIAL**
WIND ZONE: **HIGH**

BRACING PLAN

JOB No: **390076**
SHEET SIZE: **A3**
SCALE: **1:100**
DRAWN: **C. LIENERT**
PUBLISHED: **30/03/2021**
SHEET: 9
CHECKED: MS

GIB EzyBrace® Bracing Software

Demand Calculation Sheet

Job Details

Name:	EDGE & RANDELL
Street and Number:	Lot 8, Sampsons Way
Lot and DP Number:	Lot 8 DP 542244
City/Town/District:	DARGAVILLE - KAIPARA
Designer:	G.J. GARDNER HOMES
Company:	G.J. GARDNER HOMES
Date:	MARCH 2021

Building Specification

Number of Storeys	1
Floor Loading	2 kPa
Foundation Type	Slab
	Single
Cladding Weight	Heavy
Roof Weight	Light
Room in Roof Space	No
Roof Pitch (degrees)	25
Roof Height above Eaves (m)	2.74
Building Height to Apex (m)	5.06
Ground to Lower Floor (m)	0.30
Average Stud Height (m)	2.4
Building Length (m)	19.58
Building Width (m)	9.54
Building Plan Area (m²)	145.0

Building Location

Wind Zone = High

Earthquake Zone 1
Soil Type D & E (Deep to Very Soft)
Annual Prob. of Exceedance: 1 in 500 (Default)

Bracing Units required for Wind

	Along	Across
Single Level	**507**	**1098**

Bracing Units required for Earthquake

	Along & Across
Single Level	**567**

GIB EzyBrace® Version 1/17

Single Level Along Resistance Sheet

Job Name: EDGE & RANDELL

									Wind	EQ
									Demand	
									507	567
									Achieved	
Line	Element	Length (m)	Angle (degrees)	Stud Ht. (m)	Type	Supplier	Wind (BUs)	EQ (BUs)	1020 201%	1101 194%
A	1	0.60		2.4	EP1-0.6	EcoPly	57	63		
	2	1.20		2.4	EP1-1.2	EcoPly	144	162		
	External Length = 7.88								201 OK	225 OK
B	1	0.60		2.4	EP1-0.6	EcoPly	57	63		
	2	0.60		2.4	EP1-0.6	EcoPly	57	63		
	3	2.30		2.4	GS1-N	GIB®	159	138		
	4	0.60		2.4	EP1-0.6	EcoPly	57	63		
	5	0.60		2.4	EP1-0.6	EcoPly	57	63		
	External Length = 11.70								387 OK	390 OK
C	1	1.20		2.4	EP1-1.2	EcoPly	144	162		
	2	1.20		2.4	EP1-1.2	EcoPly	144	162		
	3	1.20		2.4	EP1-1.2	EcoPly	144	162		
	External Length = 19.58								432 OK	486 OK

Single Level Across Resistance Sheet

Job Name: EDGE & RANDELL

									Wind	EQ
									Demand	
									1098	567
									Achieved	
Line	Element	Length (m)	Angle (degrees)	Stud Ht. (m)	Type	Supplier	Wind (BUs)	EQ (BUs)	1499 137%	1529 270%
M	1	1.20		2.4	EP1-1.2	EcoPly	144	162		
	2	1.20		2.4	EP1-1.2	EcoPly	144	162		
	External Length = 5.30								288 OK	324 OK
N	1	1.20		2.4	EP1-1.2	EcoPly	144	162		
	2	1.40		2.4	GS1-N	GIB®	97	84		
	External Length = 4.23								241 OK	246 OK
O	1	3.10		2.4	GS1-N	GIB®	214	186		
									214 OK	186 OK
P	1	1.20		2.4	EP1-1.2	EcoPly	144	162		
	2	1.20		2.4	GS1-N	GIB®	83	72		
	External Length = 3.67								227 OK	234 OK
Q	1	0.80		2.4	GS1-N	GIB®	49	47		
	2	2.80		2.4	GS1-N	GIB®	193	168		
	External Length = 0.52								242 OK	215 OK
R	1	1.20		2.4	EP1-1.2	EcoPly	144	162		
	2	1.20		2.4	EP1-1.2	EcoPly	144	162		
	External Length = 6.39								288 OK	324 OK

G.J. Gardner. HOMES

COPYRIGHT - THIS DRAWING REMAINS THE PROPERTY OF G.J. GARDNER HOMES AND IS PROVIDED FOR THE USE DESCRIBED AND MAY NOT BE USED OR REPRODUCED IN WHOLE OR IN PART WITHOUT PERMISSION

SUDFELT CONSTRUCTION LTD
WHANGAREI / KAIPARA
FRANCHISEE FOR
G.J.GARDNER HOMES
14 PERCY STREET,
KENSINGTON
P (09) 437 5666
www.gjgardner.co.nz

ALL CONSTRUCTION TO COMPLY WITH THE LOCAL AUTHORITY REQUIREMENTS, NZ BUILDING CODE/APPROVED DOCUMENTS, AND MEANS OF COMPLIANCE, INCL. NZS3604:2011

ALL DIMENSION AND LEVELS ARE TO BE CHECKED BY CONTRACTOR PRIOR TO COMMENCEMENT OF WORK. CONTRACTOR TO REPORT ANY DISCREPANCY.

DO NOT SCALE OFF PLANS

NEW DWELLING FOR
EDGE & RANDELL
LOT 8 SAMPSONS WAY
DARGAVILLE
KAIPARA

CONSENT

LEGAL DESCRIPTION
LOT NUMBER: **8**
DP NUMBER: **542244**

SITE INFORMATION
SITE AREA: **619m²**
CORROSION: **C**
DISTRICT PLAN ZONE: **RESIDENTIAL**
WIND ZONE: **HIGH**

BRACING CALCULATIONS

JOB No:	**390076**
SHEET SIZE:	**A3**
SCALE:	**1:1.1754, 1:1**
DRAWN:	**C. LIENERT**
PUBLISHED:	**30/03/2021**

SHEET: 10
CHECKED: MS

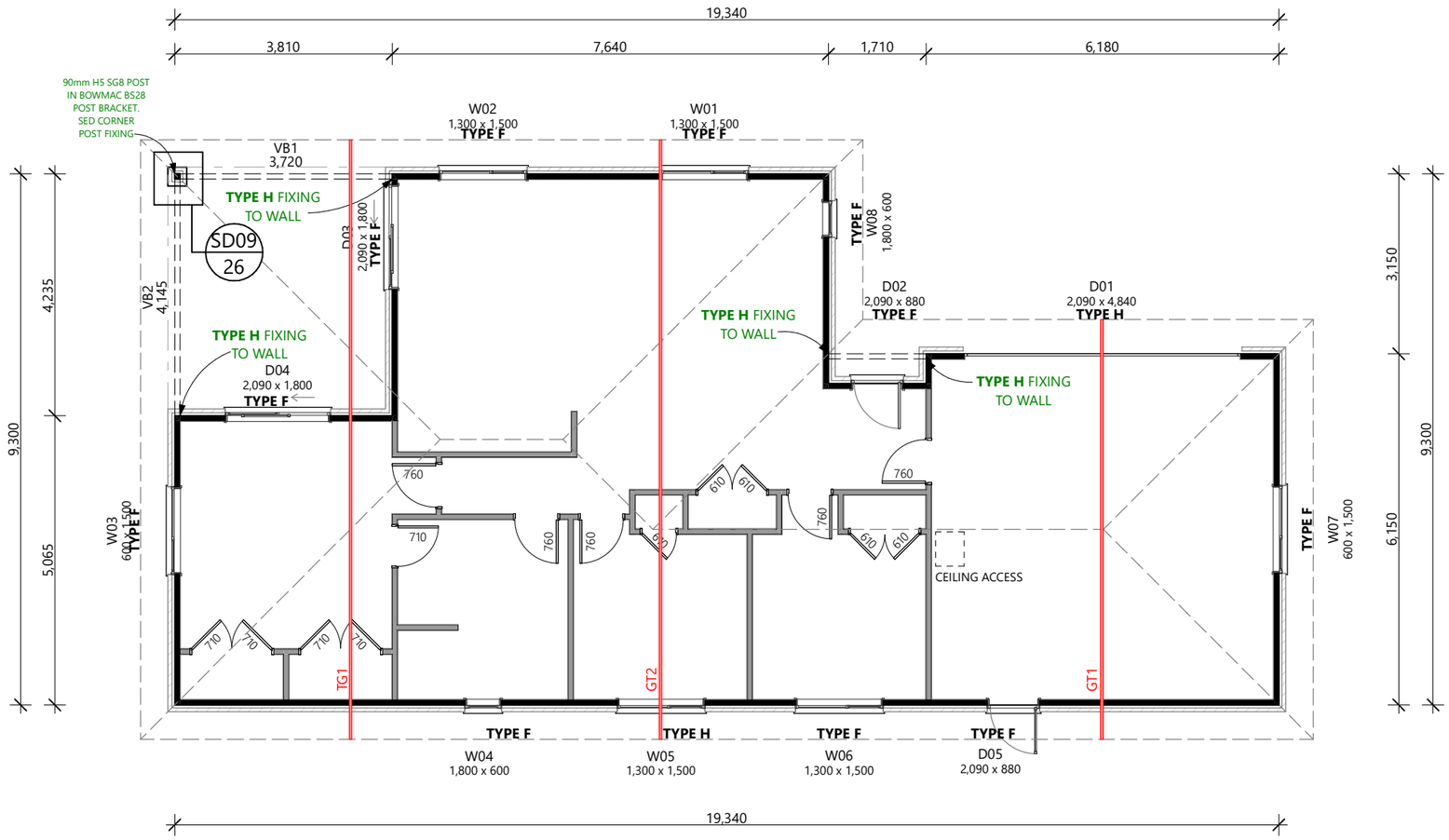

LINTEL & BEAM TYPICAL NOTES:

LINTEL FIXING NOT PREVENTING UPLIFT FIXING
(NZS3604:2011 TABLE 8.19 LINTEL TO TRIMMING STUD)

2/100 x 3.75 HAND DRIVEN END NAILS
OR
3/90 x 3.15 POWER DRIVEN END NAILS

LINTEL FIXINGS PREVENTING UPLIFT
LINTEL FIXINGS SELECTED BY LUMBERLOK FIXING MANUAL

TRIMMING STUDS
A TRIMMING STUD SHALL BE PROVIDED TO EACH SIDE OF ANY OPENING AS FOLLOWS;
- MUST BE THE SAME WIDTH AS THE STUDS IN THE WALL
- WHETHER SINGLE OR DOUBLE, SHALL NOT CONTAIN HOLES, NOTCHES, CHECKS OR CUTS IN THE MIDDLE THIRD OF THEIR LENGTH
- WHERE A DOUBLING STUD WHICH PROVIDES SUPPORT FOR A LINTEL IS SHORTER BY 400mm OR MORE THAN THE FULL STUD HEIGHT, IT'S THICKNESS SHALL NOT BE INCLUDED AS CONTRIBUTING TO THE THICKNESS OF TRIMMING STUDS FROM TABLE 8.5 OF NZS3604:2011

BEAMS/LINTELS OUTSIDE NZS3604
BEAMS AND LINTELS OUTSIDE NZS3604:2011 HAVE BEEN CALCULATED UTILISING ENGINEERED CHH DESIGN IT COMPUTER PROGRAM AS PER **JOB 334171C1**

GIRDER TRUSSES - GT#
GIRDER TRUSSES LOCATED AS PER **CARTERS** TRUSS DESIGN AS PER **334171C1**

LINTEL & FIXING

ID	WIDTH	TABLE	SIZE	UPLIFT FIXING
D01	4840	designIT	FB30M	TYPE H
D02	880	designIT	150 Hy90	TYPE F
D03	1800	designIT	150 Hy90	TYPE F
D04	1800	designIT	150 Hy90	TYPE H
D05	880	designIT	150 Hy90	TYPE F
W01	1500	designIT	150 Hy90	TYPE F
W02	1500	designIT	200 Hy90	TYPE F
W03	1500	designIT	150 Hy90	TYPE F
W04	1500	designIT	200 Hy90	TYPE F
W05	1500	designIT	200 Hy90	TYPE H
W06	1500	designIT	150 Hy90	TYPE F
W07	1500	designIT	150 Hy90	TYPE F
VB1	3720	designIT	300 Hy90	TYPE H
VB2	4145	designIT	300 Hy90	TYPE H

G.J. Gardner. HOMES

COPYRIGHT - THIS DRAWING REMAINS THE PROPERTY OF G.J. GARDNER HOMES AND IS PROVIDED FOR THE USE DESCRIBED AND MAY NOT BE USED OR REPRODUCED IN WHOLE OR IN PART WITHOUT PERMISSION

SUDFELT CONSTRUCTION LTD
WHANGAREI / KAIPARA
FRANCHISEE FOR
G.J.GARDNER HOMES
14 PERCY STREET,
KENSINGTON
P (09) 437 5666
www.gjgardner.co.nz

ALL CONSTRUCTION TO COMPLY WITH THE LOCAL AUTHORITY REQUIREMENTS, NZ BUILDING CODE/APPROVED DOCUMENTS, AND MEANS OF COMPLIANCE, INCL. NZS3604:2011

ALL DIMENSION AND LEVELS ARE TO BE CHECKED BY CONTRACTOR PRIOR TO COMMENCEMENT OF WORK. CONTRACTOR TO REPORT ANY DISCREPANCY.

DO NOT SCALE OFF PLANS

NEW DWELLING FOR
EDGE & RANDELL
LOT 8 SAMPSONS WAY
DARGAVILLE
KAIPARA

CONSENT

LEGAL DESCRIPTION
LOT NUMBER: **8**
DP NUMBER: **542244**

SITE INFORMATION
SITE AREA: **619m²**
CORROSION: **C**
DISTRICT PLAN ZONE: **RESIDENTIAL**
WIND ZONE: **HIGH**

LINTEL & BEAM PLAN

JOB No: **390076**
SHEET SIZE: **A3**
SCALE: **1:100**
DRAWN: **C. LIENERT**
PUBLISHED: **30/03/2021**
SHEET: 11
CHECKED: MS

Buildable Truss Layout

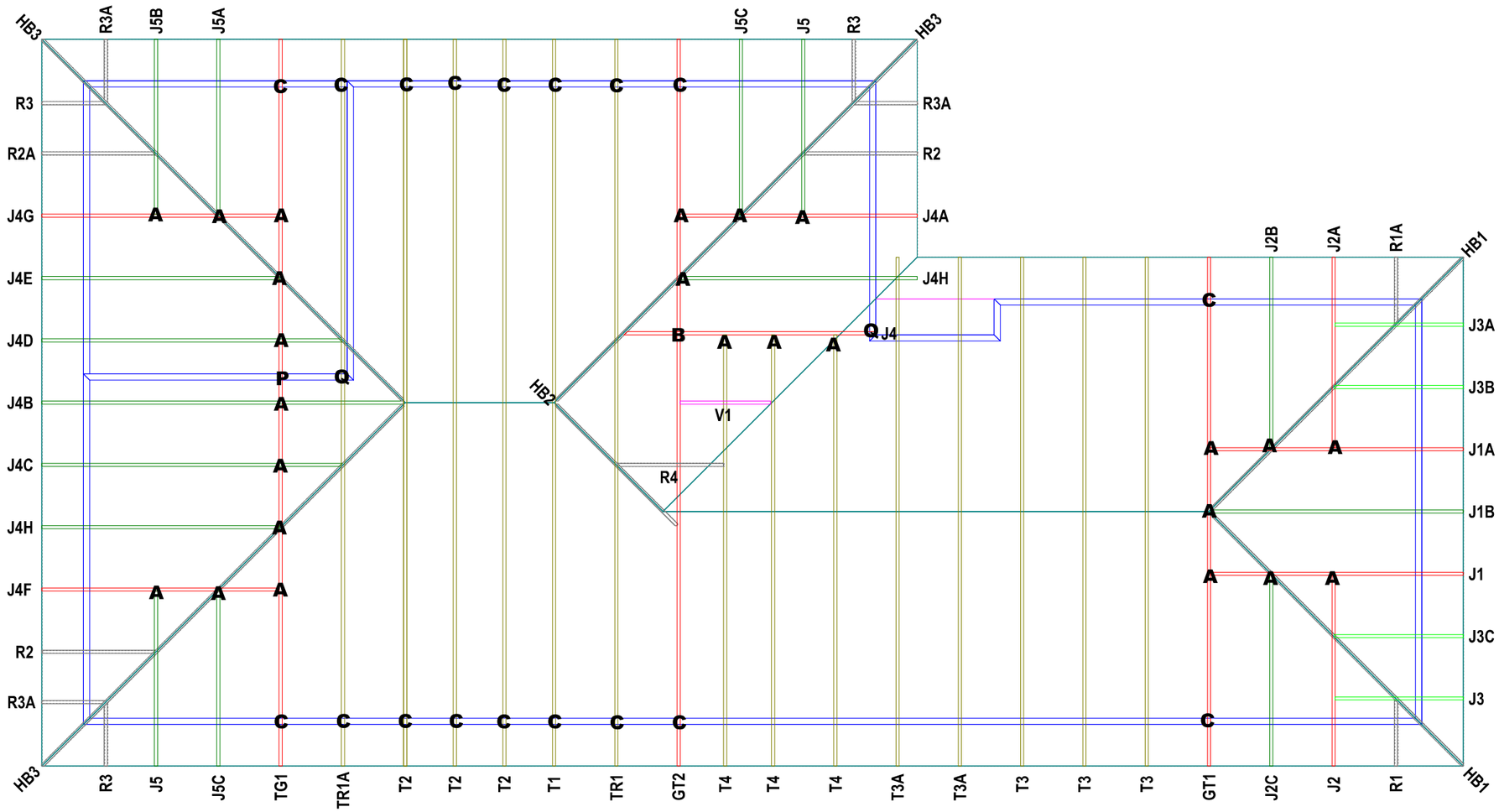

W=Wire dogs for top chord to top chord connections

CARTERS

32 Commerce St
Whangarei
Ph (09) 430 7716
Fax (09) 430 7720

JOB No 334171C1

Client: GJ Gardner (Sudfelt Const)
Job Name: Edge
Address: Lot 8 Sampsons Way

Pitch: 25.0deg
Roof Material: Metal Tiles
Soffit Overhang: 600
Wind Area: High
Ceiling: Gib 13mm/Rondo Screwed
B/chord restraints: 600
Drawn by: Administrator
Date : 30 Dec,2020

Trusses And Rafters At 900 Centres Unless Stated Otherwise.
This layout is to be read in conjunction with the Architectural plans.

PAGE 1 of 2

FIXINGS

Truss Fixing read inconjuction with truss hardware site pack supplied with trusses for fixing

A=47x90 JH
B=47x120 JH
C=CT200
D=47x190 JH
E=95x165 JH
S=Strut brace
G=SH-140 Split Hanger
H=SH-180 Split Hanger
K=SH-220 Split Hanger
L=6kn Strap
M=Multigrip
N=Nail On Plate
J=CPC 80
T=CPC 40 Short {Pair}
Q=9kn Pack
P=16kn
X=24kn uplift

All other truss fixings not indicated as above must have two wire dogs

NOTE

Please contact your local CARTERS Manufacturing Branch for any queries regarding this layout or if any on site remedial work is required.

No modifications to Roof Trusses or Wall Frames are to be undertaken without first obtaining written authority from CARTERS Manufacturing.

See Page 2 for Dimensions, Lintel Statement

G.J. Gardner. HOMES

COPYRIGHT - THIS DRAWING REMAINS THE PROPERTY OF G.J. GARDNER HOMES AND IS PROVIDED FOR THE USE DESCRIBED AND MAY NOT BE USED OR REPRODUCED IN WHOLE OR IN PART WITHOUT PERMISSION

SUDFELT CONSTRUCTION LTD
WHANGAREI / KAIPARA
FRANCHISEE FOR
G.J.GARDNER HOMES
14 PERCY STREET,
KENSINGTON
P (09) 437 5666
www.gjgardner.co.nz

ALL CONSTRUCTION TO COMPLY WITH THE LOCAL AUTHORITY REQUIREMENTS, NZ BUILDING CODE/APPROVED DOCUMENTS, AND MEANS OF COMPLIANCE, INCL. NZS3604:2011

ALL DIMENSION AND LEVELS ARE TO BE CHECKED BY CONTRACTOR PRIOR TO COMMENCEMENT OF WORK. CONTRACTOR TO REPORT ANY DISCREPANCY.

DO NOT SCALE OFF PLANS

NEW DWELLING FOR
EDGE & RANDELL
LOT 8 SAMPSONS WAY
DARGAVILLE
KAIPARA

CONSENT

LEGAL DESCRIPTION
LOT NUMBER: **8**
DP NUMBER: **542244**

SITE INFORMATION
SITE AREA: **619m²**
CORROSION: **C**
DISTRICT PLAN ZONE: **RESIDENTIAL**
WIND ZONE: **HIGH**

TRUSS DESIGN

JOB No: **390076**
SHEET SIZE: **A3**
SCALE: **1:1.1196**
DRAWN: **C. LIENERT**
PUBLISHED: **30/03/2021**
SHEET: 12
CHECKED: MS

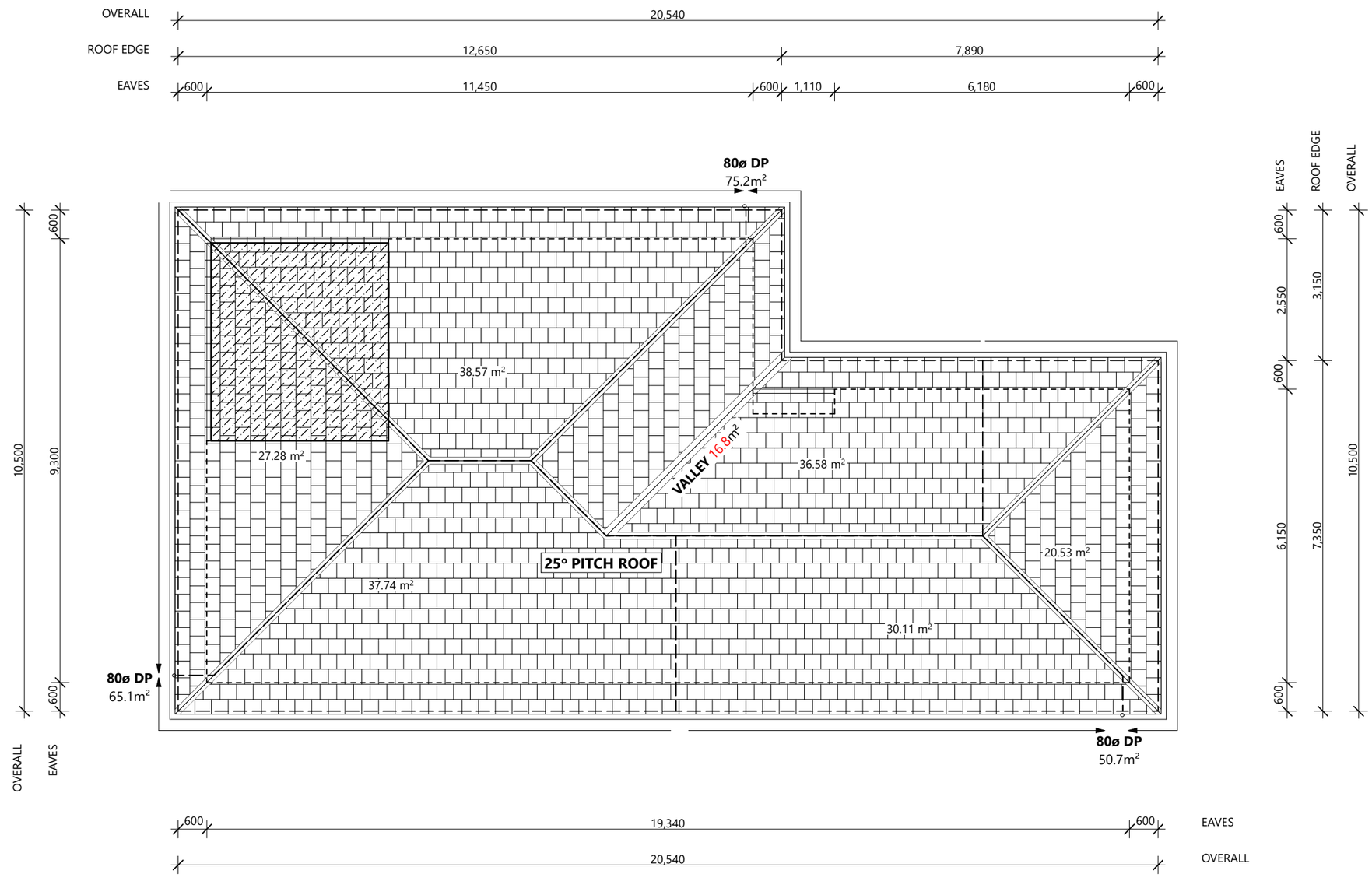

LIGHT ROOF - METAL TILE
ROOF BRACING - ONE PER 50m² REQUIRED
190.8m² ROOF AREA / 50m²
= **4** ROOF BRACES REQUIRED.

7 HIPS AND VALLEYS - 3
4 HIPS & VALLEYS
ROOF BRACING ACHIEVED

RAINFALL INTENSITY FOR

LOT 8 SAMPSONS WAY
DARGAVILLE KAIPARA - NIWA V4

107 + 15 = 122mm/h

6300mm² FOR 100mm/h RAINFALL INTENSITY

5200mm² ALLOWED CONTINUOUS QUARTER ROUND SPOUTING FOR 120mm/h RAINFALL INTENSITY

42m² MAX. ROOF AREA

NOTES:
REFER TO SPECIFICATIONS FOR DOWNPIPE AND SPOUTING SUPPORTING DOCUMENTS TO DEMONSTRATE COMPLIANCE WITH E1 OF THE BUILDING CODE IN ACCORDANCE WITH THE ACCEPTABLE SOLUTION E1/AS1

READ IN CONJUNCTION WITH FINAL PS1 & PRE-CUT DESIGN & DOCUMENTS. TRUSS MANUFACTURER TO INFORM DESIGNER OF ANY FURTHER SLAB THICKENING THAT ARE REQUIRED TO SUPPORT ROOF LOADS PRIOR TO LODGEMENT OF BC.

ENSURE THAT ALL DOWNPIPES ARE POSITIONED WELL CLEAR OF JOINERY UNITS

RAISED SOFFIT

AREA OF RAISED SOFFIT IN ALFRESCO AREA SHOWN. CEILING BATTENS 70 x 35 @600mm CRS H1.2 SG8 DIRECTLY FIXED TO BOTTOM OF TRUSSED AREA WITH 4.5mm FIBRE CEMENT SHEET LINING

G.J. Gardner. HOMES

COPYRIGHT - THIS DRAWING REMAINS THE PROPERTY OF G.J. GARDNER HOMES AND IS PROVIDED FOR THE USE DESCRIBED AND MAY NOT BE USED OR REPRODUCED IN WHOLE OR IN PART WITHOUT PERMISSION

SUDFELT CONSTRUCTION LTD
WHANGAREI / KAIPARA
FRANCHISEE FOR
G.J.GARDNER HOMES
14 PERCY STREET,
KENSINGTON
P (09) 437 5666
www.gjgardner.co.nz

ALL CONSTRUCTION TO COMPLY WITH THE LOCAL AUTHORITY REQUIREMENTS, NZ BUILDING CODE/APPROVED DOCUMENTS, AND MEANS OF COMPLIANCE, INCL. NZS3604:2011

ALL DIMENSION AND LEVELS ARE TO BE CHECKED BY CONTRACTOR PRIOR TO COMMENCEMENT OF WORK. CONTRACTOR TO REPORT ANY DISCREPANCY.

DO NOT SCALE OFF PLANS

NEW DWELLING FOR
EDGE & RANDELL
LOT 8 SAMPSONS WAY
DARGAVILLE
KAIPARA

CONSENT

LEGAL DESCRIPTION
LOT NUMBER: **8**
DP NUMBER: **542244**

SITE INFORMATION
SITE AREA: **619m²**
CORROSION: **C**
DISTRICT PLAN ZONE: **RESIDENTIAL**
WIND ZONE: **HIGH**

ROOF PLAN

JOB No: **390076**
SHEET SIZE: **A3**
SCALE: **1:100, 1:10**
DRAWN: **C. LIENERT**
PUBLISHED: **30/03/2021**
SHEET: 13
CHECKED: MS

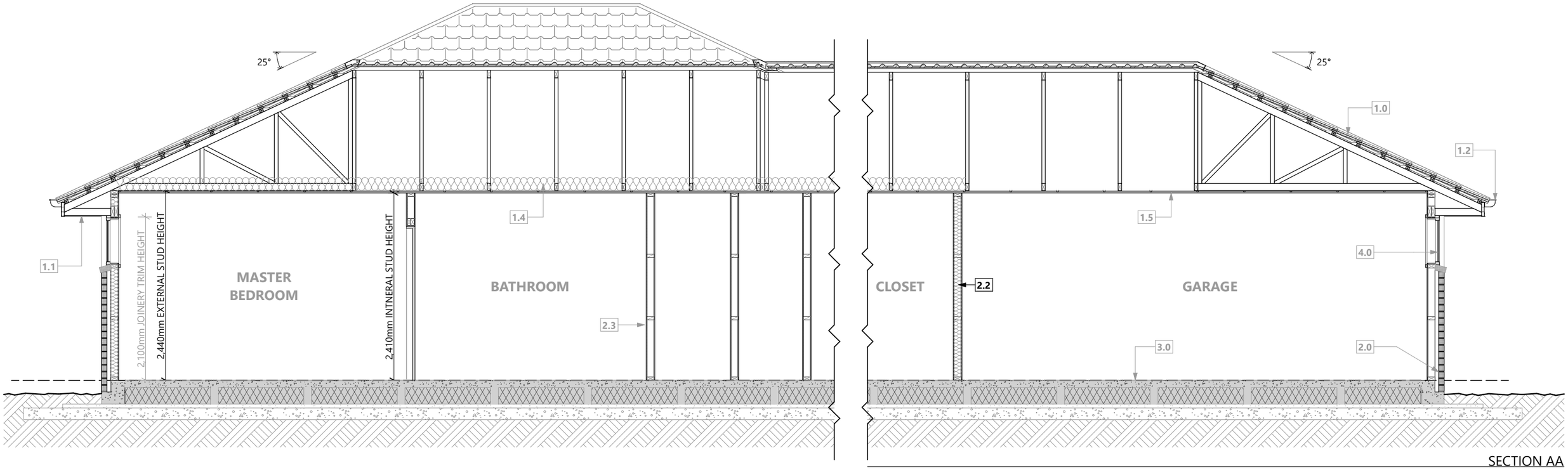

SECTION AA

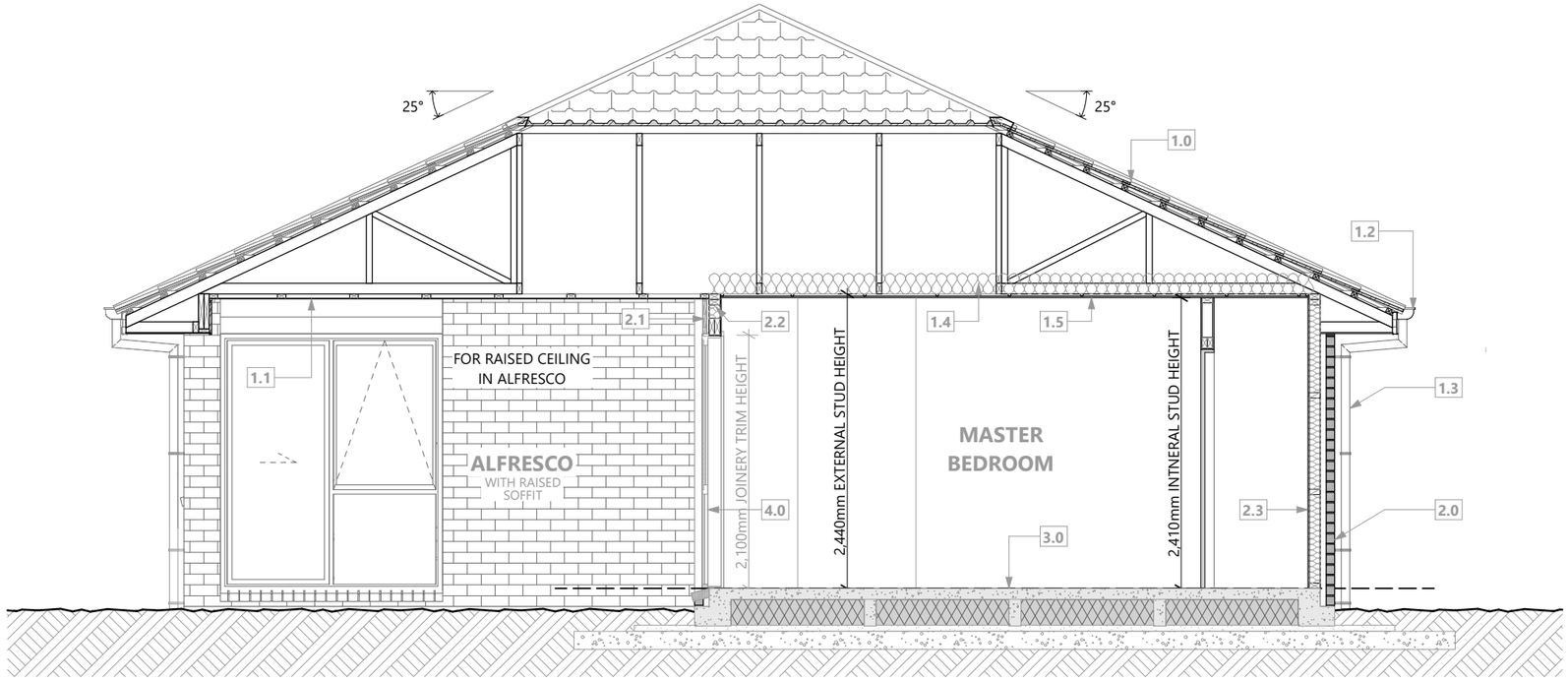

SECTION BB

SECTION NOTES:

1.0 GERARD PRESSED METAL TILE ROOF OVER BATTENS OVER SELECTED ROOFING UNDERLAY. REFER TO ROOF FRAMING PLAN FOR TILE BATTEN FIXING

1.1 SELECTED FIBRE CEMENT 4.5mm SOFFIT LINING

1.2 CONTINUOUS SPOUTING QUARTER ROUND GUTTER ON COLORSTEEL FASCIA

1.3 80mmø ROUND uPVC DOWNPIPES

1.4 R2.2 PINK BATTS IN CEILING OF THERMAL ENVELOPE. REFER TO FLOOR PLAN FOR LOCATION OF THERMAL ENVELOPE.
REFER TO H1 CALCULATIONS FOR ACHIEVED CONSTRUCTION R-VALUE AND GENERAL COMPLIANCE DETAILS

1.5 RONDO NZ31 DIRECT FIXED CEILING BATTENS AT 600mm CRS WITH 13mm SELECTED GIB LINING

2.0 SELECTED 70 SERIES BRICK VENEER OVER A 50mm DRAINED CAVITY OVER SELECTED BREATHER TYPE BUILDING PAPER. BRICK VENEER SELECTED FROM BUILDERS RANGE

2.1 SELECTED FIBRE CEMENT BEVELBACK WEATHERBOARD ON A 20mm CAVITY OVER SELECTED BREATHER TYPE BUILDING PAPER.

2.2 R3.2 PINK BATTS IN WALLS OF THERMAL ENVELOPE
-IN EXTERNAL WALLS - EXCLUDING GARAGE
-IN INTERNAL WALLS BETWEEN HABITABLE SPACE AND GARAGE
REFER TO H1 CALCULATIONS FOR ACHIEVED CONSTRUCTION R-VALUE AND GENERAL COMPLIANCE DETAILS

2.3 10mm SELECTED GIB WALL LINING. AQUALINE TO 'WET AREAS' AND SELECTED BRACING ELEMENTS AS PER BRACING PLAN. 10mm STANDARD GIB ELSEWHERE.

3.0 FIRTH RIBRAFT SLAB - REFER TO FOUNDATION PLAN FOR DETAILS. R1.3 CONSTRUCTION R-VALUE ACHIEVED

4.0 SELECTED POWDERCOATED ALUMINIUM JOINERY, ALL GLASS WINDOWS AND DOORS ARE TO BE DOUBLE GLAZED. ALL GLASS TO MEET NZS4223 SAFETY GLAZING.

G.J. Gardner. HOMES

COPYRIGHT - THIS DRAWING REMAINS THE PROPERTY OF G.J. GARDNER HOMES AND IS PROVIDED FOR THE USE DESCRIBED AND MAY NOT BE USED OR REPRODUCED IN WHOLE OR IN PART WITHOUT PERMISSION

SUDFELT CONSTRUCTION LTD
WHANGAREI / KAIPARA
FRANCHISEE FOR
G.J.GARDNER HOMES
14 PERCY STREET,
KENSINGTON
P (09) 437 5666
www.gjgardner.co.nz

ALL CONSTRUCTION TO COMPLY WITH THE LOCAL AUTHORITY REQUIREMENTS, NZ BUILDING CODE/APPROVED DOCUMENTS, AND MEANS OF COMPLIANCE, INCL. NZS3604:2011

ALL DIMENSION AND LEVELS ARE TO BE CHECKED BY CONTRACTOR PRIOR TO COMMENCEMENT OF WORK. CONTRACTOR TO REPORT ANY DISCREPANCY.

DO NOT SCALE OFF PLANS

NEW DWELLING FOR
EDGE & RANDELL
LOT 8 SAMPSONS WAY
DARGAVILLE
KAIPARA

CONSENT

LEGAL DESCRIPTION
LOT NUMBER: **8**
DP NUMBER: **542244**

SITE INFORMATION
SITE AREA: **619m²**
CORROSION: **C**
DISTRICT PLAN ZONE: **RESIDENTIAL**
WIND ZONE: **HIGH**

SECTIONS

JOB No: **390076**
SHEET SIZE: **A3**
SCALE: **1:50, 1:126.1886**
DRAWN: **C. LIENERT**
PUBLISHED: **30/03/2021**
SHEET: **14**
CHECKED: MS

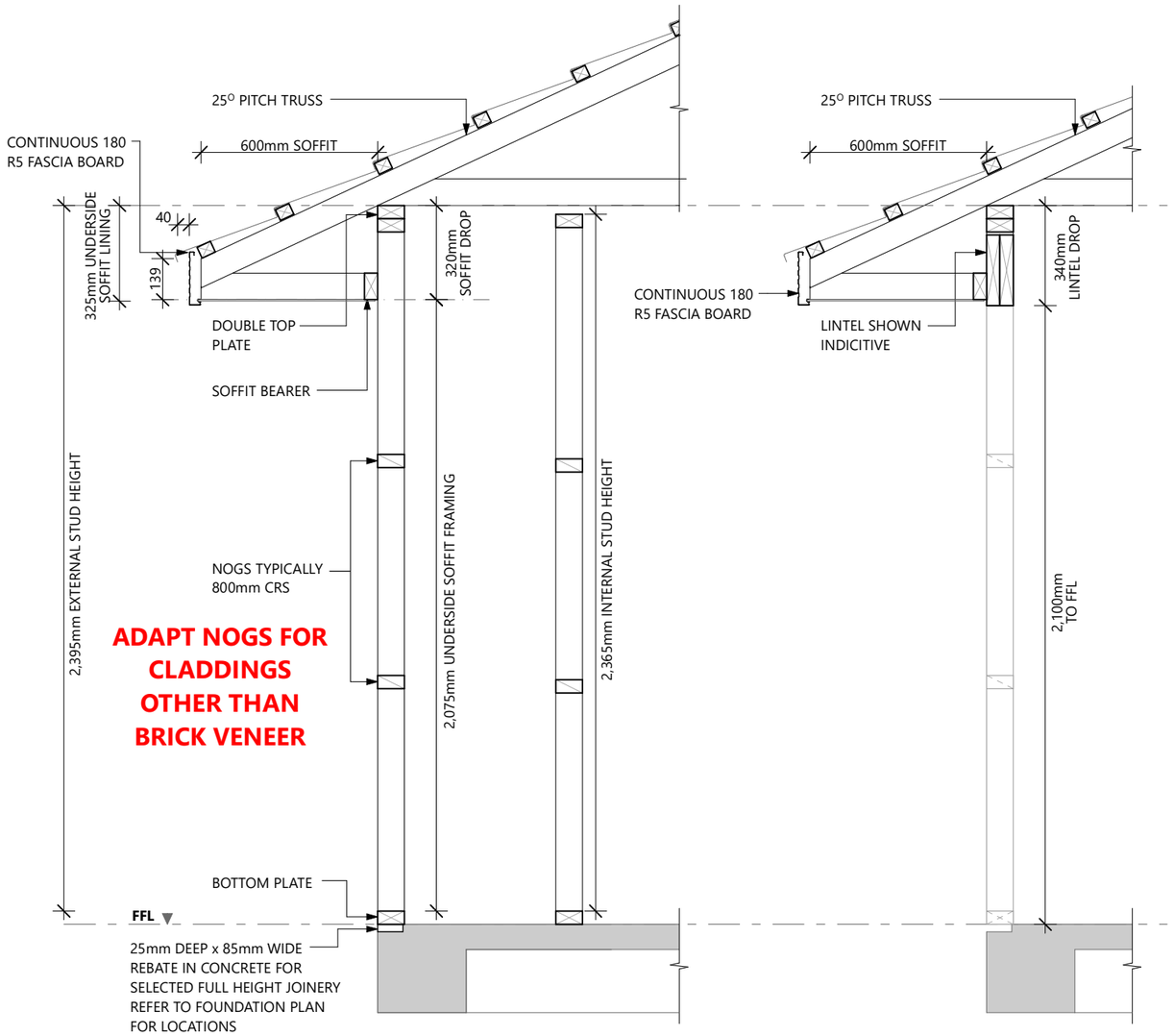

WALL FRAMING SETOUT FOR FRAME & TRUSS
1:20

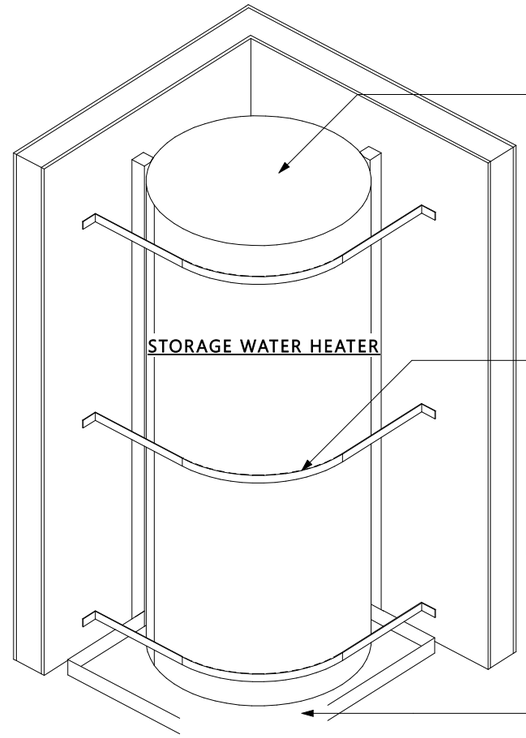

ID08
-

HOT WATER CYLINDER SEISMIC RESTRAINT DETAIL
1:20

G.J. Gardner. HOMES

COPYRIGHT - THIS DRAWING REMAINS THE PROPERTY OF G.J. GARDNER HOMES AND IS PROVIDED FOR THE USE DESCRIBED AND MAY NOT BE USED OR REPRODUCED IN WHOLE OR IN PART WITHOUT PERMISSION

SUDFELT CONSTRUCTION LTD
WHANGAREI / KAIPARA
FRANCHISEE FOR
G.J.GARDNER HOMES
14 PERCY STREET,
KENSINGTON
P (09) 437 5666
www.gjgardner.co.nz

ALL CONSTRUCTION TO COMPLY WITH THE LOCAL AUTHORITY REQUIREMENTS, NZ BUILDING CODE/APPROVED DOCUMENTS, AND MEANS OF COMPLIANCE, INCL. NZS3604:2011

ALL DIMENSION AND LEVELS ARE TO BE CHECKED BY CONTRACTOR PRIOR TO COMMENCEMENT OF WORK. CONTRACTOR TO REPORT ANY DISCREPANCY.

DO NOT SCALE OFF PLANS

NEW DWELLING FOR
EDGE & RANDELL
LOT 8 SAMPSONS WAY
DARGAVILLE
KAIPARA

CONSENT

LEGAL DESCRIPTION
LOT NUMBER: **8**
DP NUMBER: **542244**
SITE INFORMATION
SITE AREA: **619m²**
CORROSION: **C**
DISTRICT PLAN ZONE: **RESIDENTIAL**
WIND ZONE: **HIGH**

DETAILS - WALL FRAMING SET OUT

JOB No: **390076**
SHEET SIZE: **A3**
SCALE: **1:20**
DRAWN: **C. LIENERT**
PUBLISHED: **30/03/2021**
SHEET: 15
CHECKED: MS

FIXING TYPE A
0.7kN

2 x 90mm x 3.15 dia. plain steel wire nails driven vertically into stud.

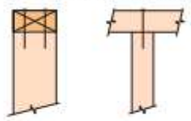

FIXING TYPE B
4.7kN

CHOOSE ANY OF THE 3 OPTIONS BELOW

2 x 90mm x 3.15 dia. plain steel wire nails driven vertically into stud.

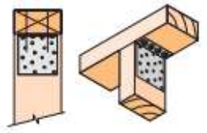

Plus
LUMBERLOK
6kN Stud Anchor
(CPC80)

2 x 90mm x 3.15 dia. plain steel wire nails driven vertically into stud.

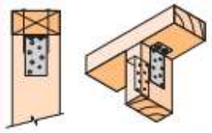

Plus
2 x LUMBERLOK
CPC40

Recommended for internal wall options to avoid lining issues

2 x 90mm x 3.15 dia. plain steel wire nails driven vertically into stud.

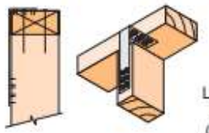

Plus
LUMBERLOK
Stud Strap
(one face only)

LUMBERLOK STUD TO TOP PLATE FIXING
1:100

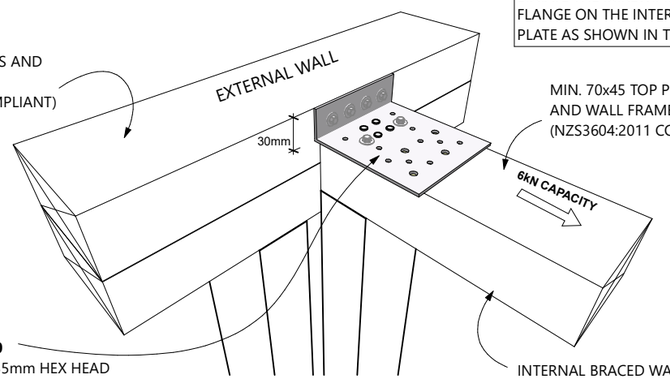

NOTE:
LOCATE THE SCREWS IN THE FLANGE ON THE INTERNAL TOP PLATE AS SHOWN IN THE DRAWING

LUMBERLOK CPC80
-4 x TYPE 17-14g x 35mm HEX HEAD SCREWS TO THE EXTERNAL TOP PLATE
-2 x TYPE 17-14g x 35mm HEX HEAD SCREWS TO THE INTERNAL TOP PLATE
-4 x 30 x 3.15mm LUMBERLOK PRODUCT NAILS TO THE INTERNAL TOP PLATE

COMPLIES WITH NZS3604:2011 CLAUSE 8.7.3.4

RS Eng Ltd
Consulting Engineers
This drawing is in accordance with our calculations where applicable.
per .....
Chartered Professional Engineer

INTERNAL WALL DROP CONNECTION DETAIL
1:20

LINTEL FIXING OPTIONS

TYPE E
1.4kN

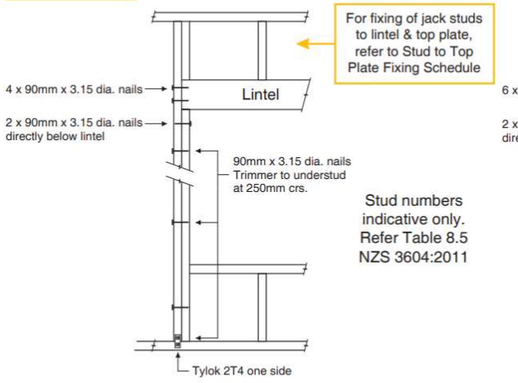

TYPE F
4.0kN

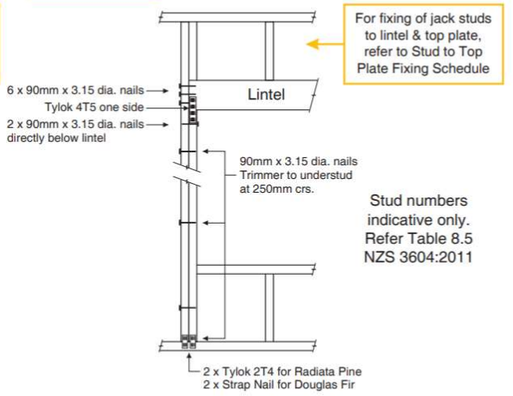

TYPE G
7.5kN

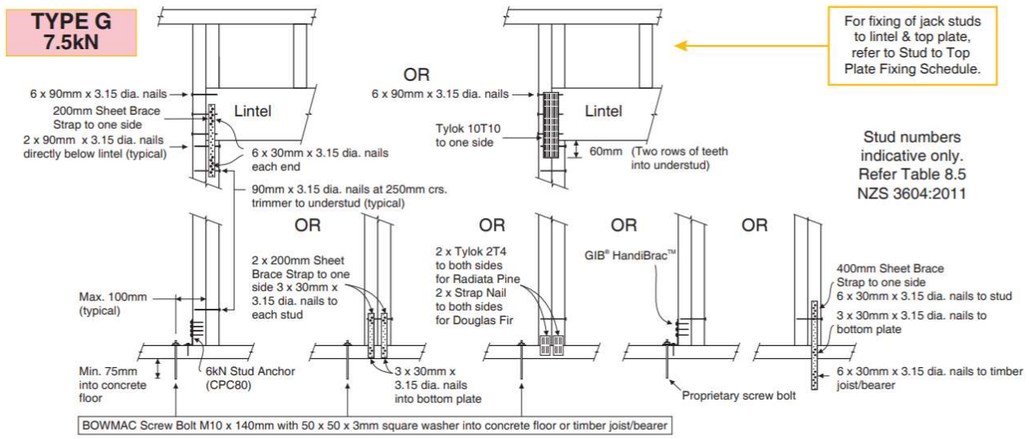

TYPE H
13.5kN

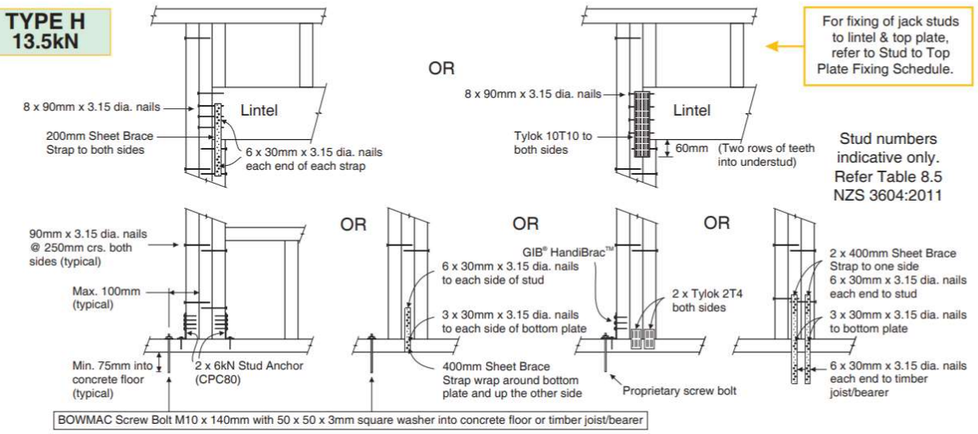

LUMBERLOK LINTEL FIXING SCHEDULE
1:100

COPYRIGHT - THIS DRAWING REMAINS THE PROPERTY OF G.J. GARDNER HOMES AND IS PROVIDED FOR THE USE DESCRIBED AND MAY NOT BE USED OR REPRODUCED IN WHOLE OR IN PART WITHOUT PERMISSION

G.J. Gardner. HOMES
SUDFELT CONSTRUCTION LTD
WHANGAREI / KAIPARA
FRANCHISEE FOR
G.J.GARDNER HOMES
14 PERCY STREET,
KENSINGTON
P (09) 437 5666
www.gjgardner.co.nz

ALL CONSTRUCTION TO COMPLY WITH THE LOCAL AUTHORITY REQUIREMENTS, NZ BUILDING CODE/APPROVED DOCUMENTS, AND MEANS OF COMPLIANCE, INCL. NZS3604:2011

ALL DIMENSION AND LEVELS ARE TO BE CHECKED BY CONTRACTOR PRIOR TO COMMENCEMENT OF WORK. CONTRACTOR TO REPORT ANY DISCREPANCY.

DO NOT SCALE OFF PLANS

NEW DWELLING FOR
EDGE & RANDELL
LOT 8 SAMPSONS WAY
DARGAVILLE
KAIPARA

CONSENT

LEGAL DESCRIPTION
LOT NUMBER: **8**
DP NUMBER: **542244**
SITE INFORMATION
SITE AREA: **619m²**
CORROSION: **C**
DISTRICT PLAN ZONE: **RESIDENTIAL**
WIND ZONE: **HIGH**

DETAILS - FRAMING FIXINGS

JOB No: **390076**
SHEET SIZE: **A3**
SCALE: **1:100, 1:20**
DRAWN: **C. LIENERT**
PUBLISHED: **23/03/2021**
SHEET: 16
CHECKED: MS

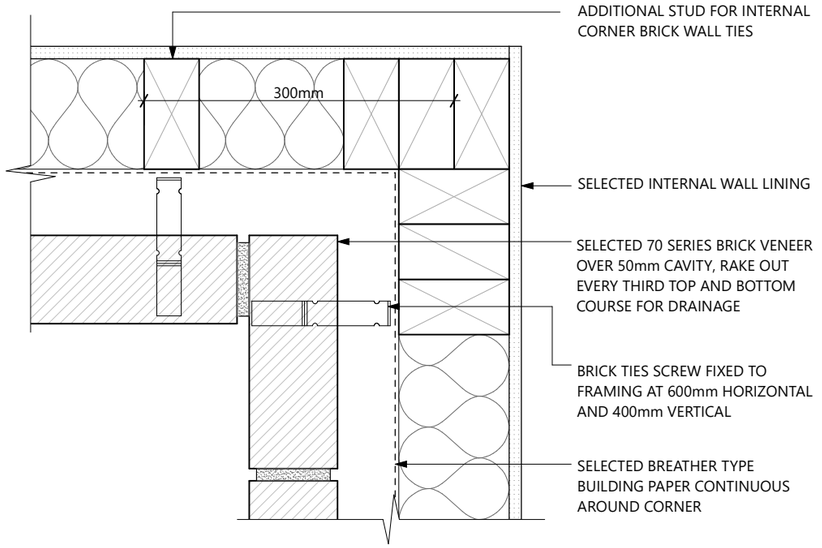

D01 - BRICK INTERNAL CORNER DETAIL 1:5

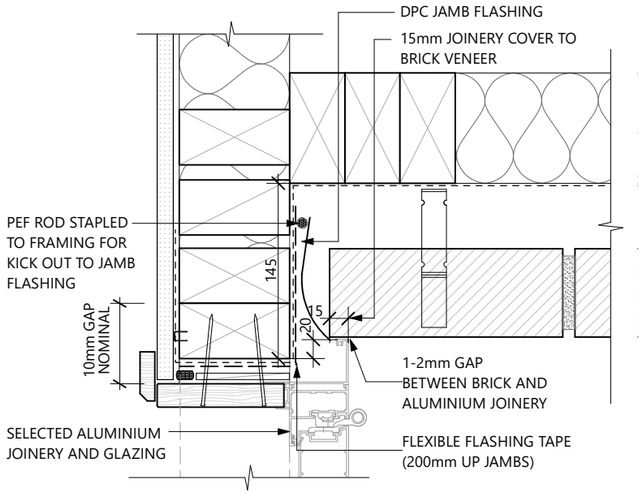

D03 - BRICK TO JOINERY JAMB DETAIL 1:5

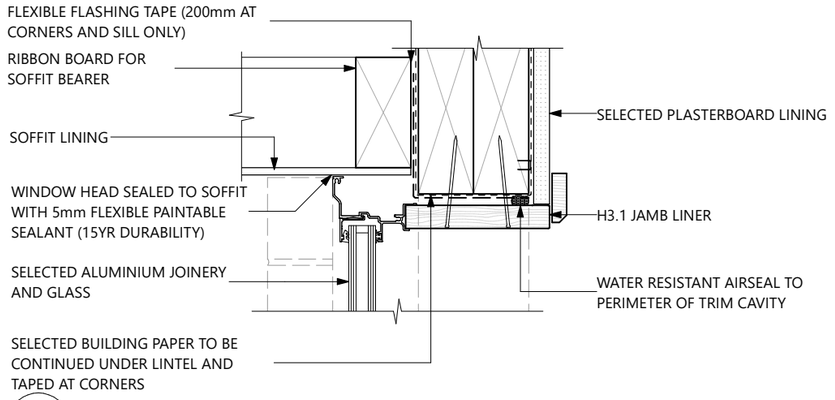

D05 - BRICK HEAD SOFFIT DETAIL 1:5

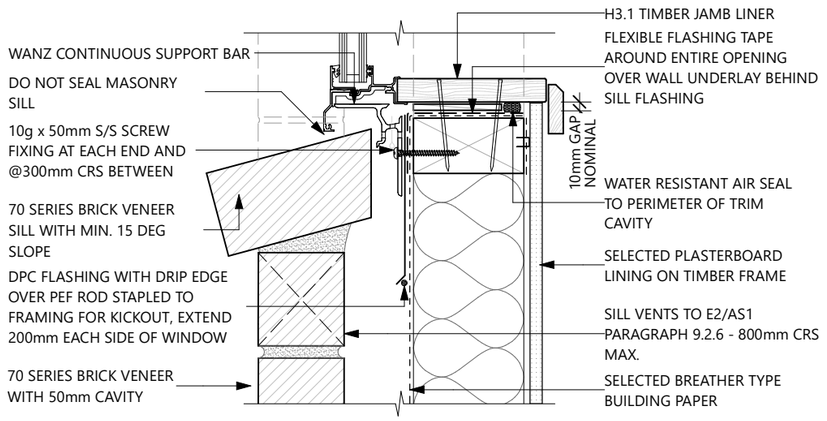

D06 - BRICK SILL DETAIL 1:5

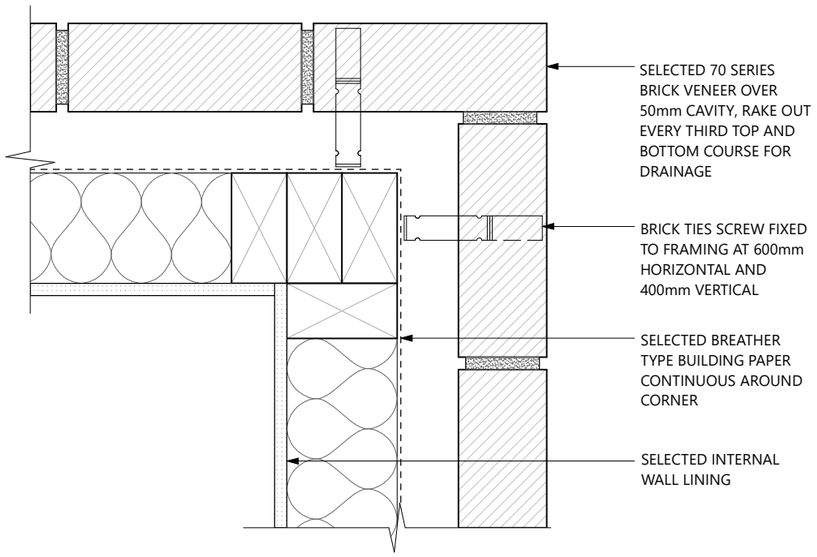

D02 - BRICK EXTERNAL CORNER DETAIL 1:5

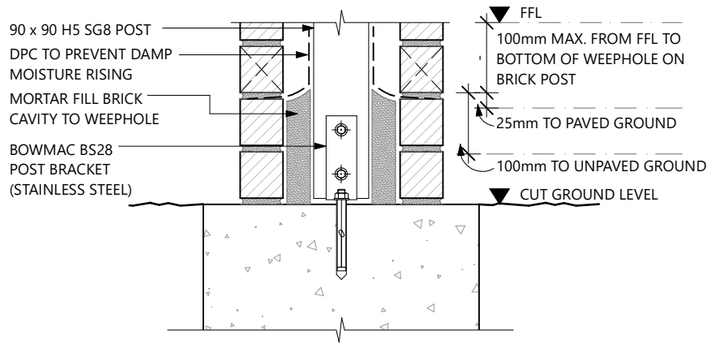

D04 - BRICK POST DETAIL 1:10

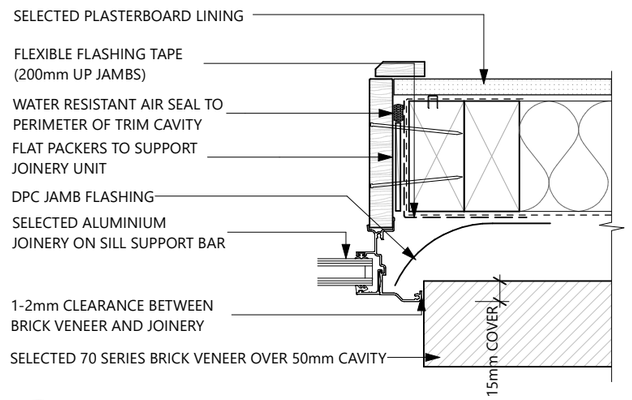

D07 - BRICK JAMB DETAIL 1:5

COPYRIGHT - THIS DRAWING REMAINS THE PROPERTY OF G.J. GARDNER HOMES AND IS PROVIDED FOR THE USE DESCRIBED AND MAY NOT BE USED OR REPRODUCED IN WHOLE OR IN PART WITHOUT PERMISSION

G.J. Gardner. HOMES
SUDFELT CONSTRUCTION LTD
WHANGAREI / KAIPARA
FRANCHISEE FOR
G.J.GARDNER HOMES
14 PERCY STREET,
KENSINGTON
P (09) 437 5666
www.gjgardner.co.nz

ALL CONSTRUCTION TO COMPLY WITH THE LOCAL AUTHORITY REQUIREMENTS, NZ BUILDING CODE/APPROVED DOCUMENTS, AND MEANS OF COMPLIANCE, INCL. NZS3604:2011

ALL DIMENSION AND LEVELS ARE TO BE CHECKED BY CONTRACTOR PRIOR TO COMMENCEMENT OF WORK. CONTRACTOR TO REPORT ANY DISCREPANCY.

DO NOT SCALE OFF PLANS

NEW DWELLING FOR
EDGE & RANDELL
LOT 8 SAMPSONS WAY
DARGAVILLE
KAIPARA

CONSENT

LEGAL DESCRIPTION
LOT NUMBER: **8**
DP NUMBER: **542244**
SITE INFORMATION
SITE AREA: **619m²**
CORROSION: **C**
DISTRICT PLAN ZONE: **RESIDENTIAL**
WIND ZONE: **HIGH**

DETAILS - CLADDING

JOB No: **390076**
SHEET SIZE: **A3**
SCALE: **1:5, 1:10**
DRAWN: **C. LIENERT**
PUBLISHED: **30/03/2021**
SHEET: 17
CHECKED: MS

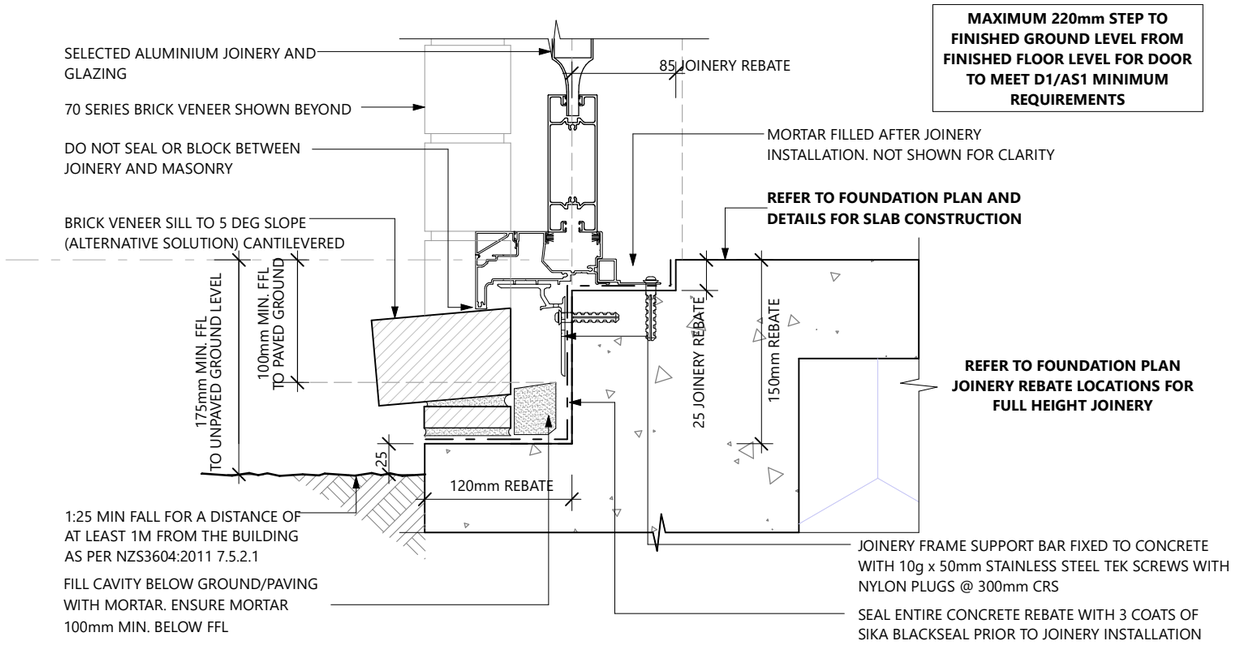

D08
-

BRICK DOOR SILL DETAIL (WITH REBATE)
1:5

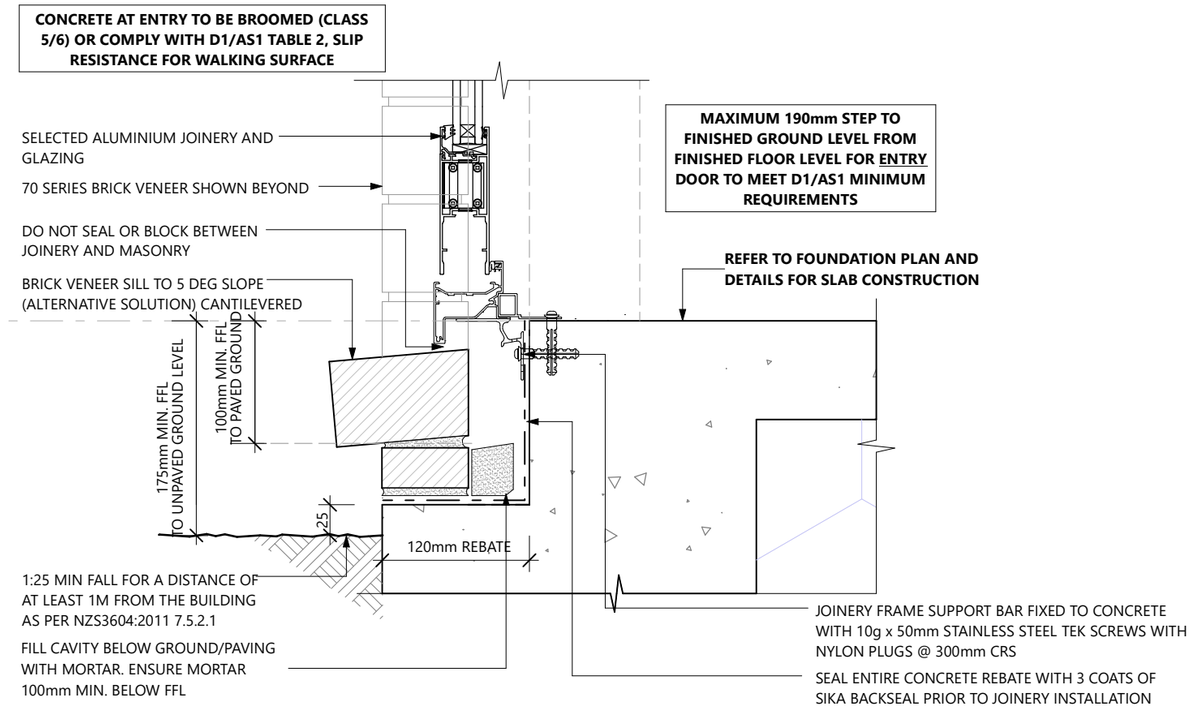

D09
-

BRICK DOOR SILL DETAIL (NO REBATE / ENTRY DOOR)
1:5

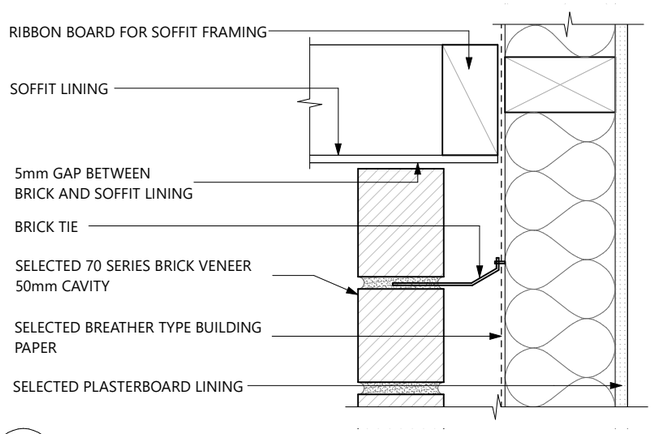

D10
-

BRICK SOFFIT DETAIL
1:5

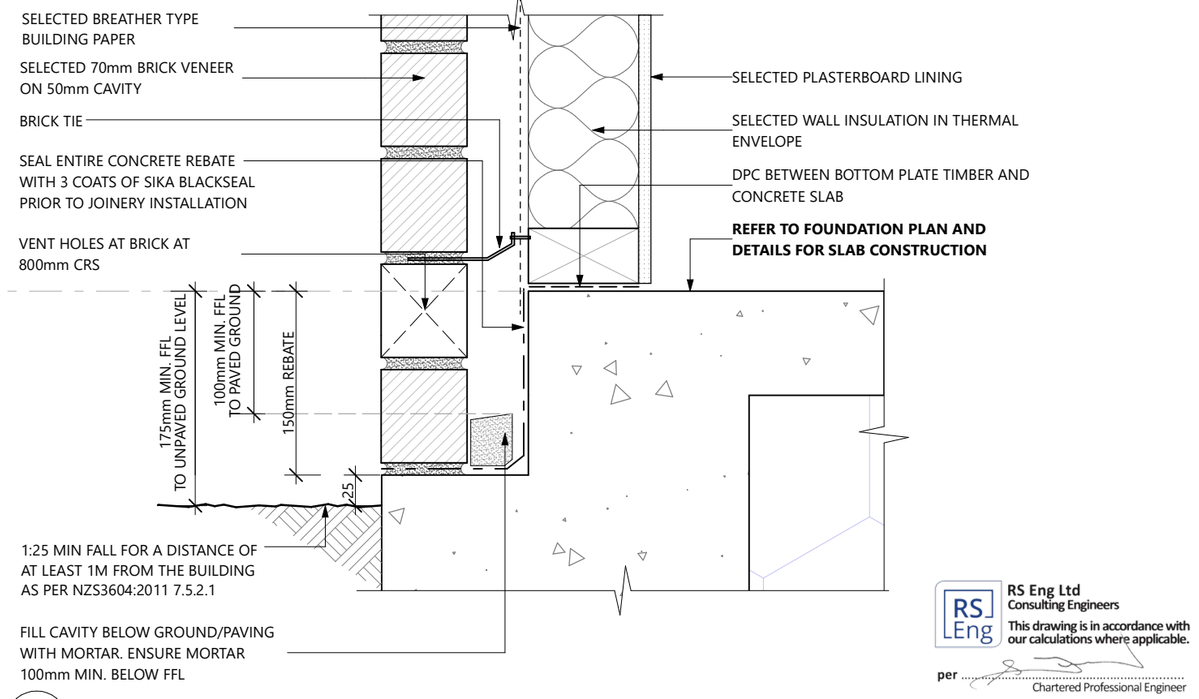

D11
-

BRICK TO FOUNDATION DETAIL
1:5

RS Eng Ltd
Consulting Engineers
This drawing is in accordance with our calculations where applicable.
per .....
Chartered Professional Engineer

G.J. Gardner. HOMES

COPYRIGHT - THIS DRAWING REMAINS THE PROPERTY OF G.J. GARDNER HOMES AND IS PROVIDED FOR THE USE DESCRIBED AND MAY NOT BE USED OR REPRODUCED IN WHOLE OR IN PART WITHOUT PERMISSION

SUDFELT CONSTRUCTION LTD
WHANGAREI / KAIPARA
FRANCHISEE FOR
G.J.GARDNER HOMES
14 PERCY STREET,
KENSINGTON
P (09) 437 5666
www.gjgardner.co.nz

ALL CONSTRUCTION TO COMPLY WITH THE LOCAL AUTHORITY REQUIREMENTS, NZ BUILDING CODE/APPROVED DOCUMENTS, AND MEANS OF COMPLIANCE, INCL. NZS3604:2011

ALL DIMENSION AND LEVELS ARE TO BE CHECKED BY CONTRACTOR PRIOR TO COMMENCEMENT OF WORK. CONTRACTOR TO REPORT ANY DISCREPANCY.

DO NOT SCALE OFF PLANS

NEW DWELLING FOR
EDGE & RANDELL
LOT 8 SAMPSONS WAY
DARGAVILLE
KAIPARA

CONSENT

LEGAL DESCRIPTION
LOT NUMBER: **8**
DP NUMBER: **542244**

SITE INFORMATION
SITE AREA: **619m²**
CORROSION: **C**
DISTRICT PLAN ZONE: **RESIDENTIAL**
WIND ZONE: **HIGH**

DETAILS - CLADDING

JOB No: **390076**
SHEET SIZE: **A3**
SCALE: **1:5**
DRAWN: **C. LIENERT**
PUBLISHED: **23/03/2021**
SHEET: 18
CHECKED: MS

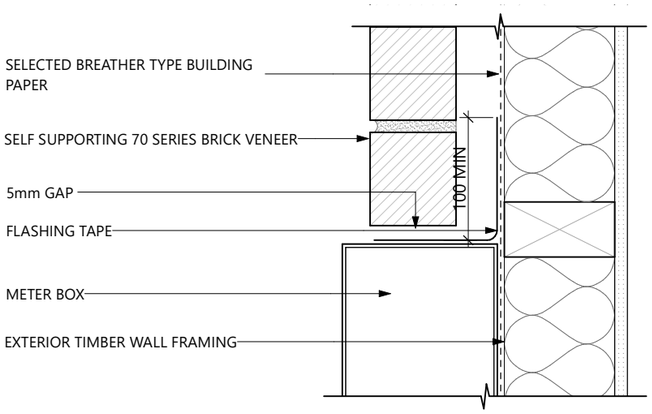

D12 - BRICK METERBOX HEAD DETAIL 1:5

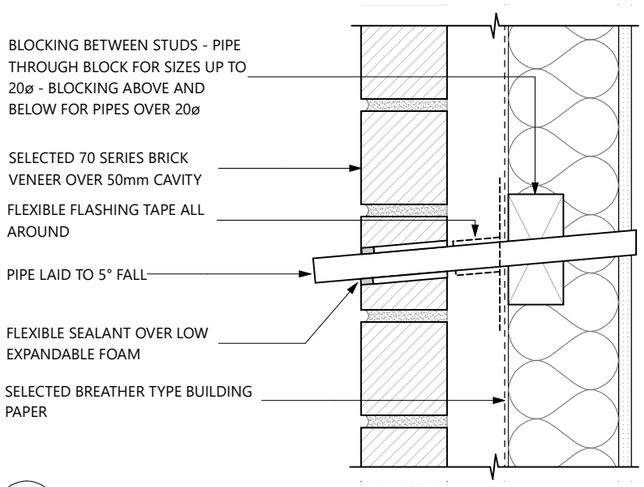

D13 - BRICK PIPE PENETRATION DETAIL 1:5

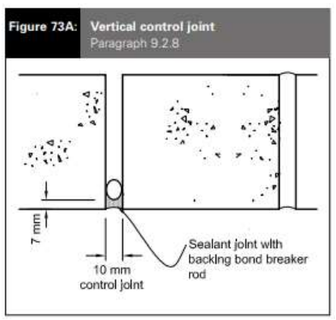

BRICK VENEER *(E2/AS1 9.2.8.1 & SPECIFIC DESIGN)*

LONGITUDINAL SHRINKAGE STRESSES IN BRICK VENEER SHALL BE CONTROLLED BY PROVIDING VERTICAL CONTROL JOINTS AT NO MORE THAN 5m CENTRES

VERTICAL CONTROL JOINTS SHALL BE LOCATED:

(a) WITHIN 600mm OF 'T' JOINTS
(b) WITHIN 600mm OF 'L' SHAPED CORNERS OR BY RESTRICTING THE SPACING TO THE NEXT CONTROL JOINT TO 3.2m MAX.
(c) AT CHANGES IN WALL HEIGHT, EXCEEDING 600mm
(d) AT CHANGES IN WALL THICKNESS

D14 - BRICK VENEER CONTROL JOINT 1:5

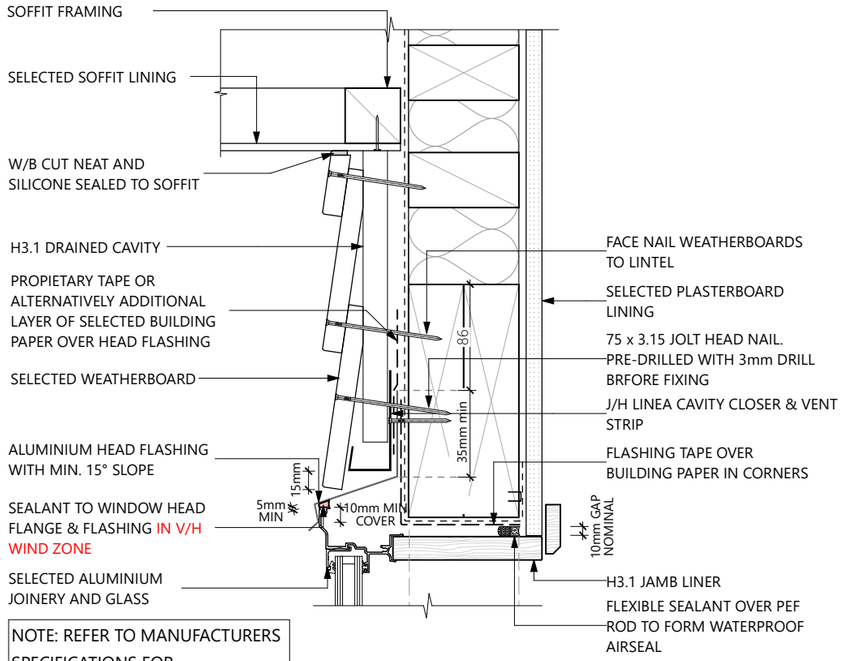

NOTE: REFER TO MANUFACTURERS SPECIFICATIONS FOR WEATHERBOARD FIXING PATTEN

D15 - WEATHERBOARD ABOVE JOINERY IN ALFRESCO 1:5

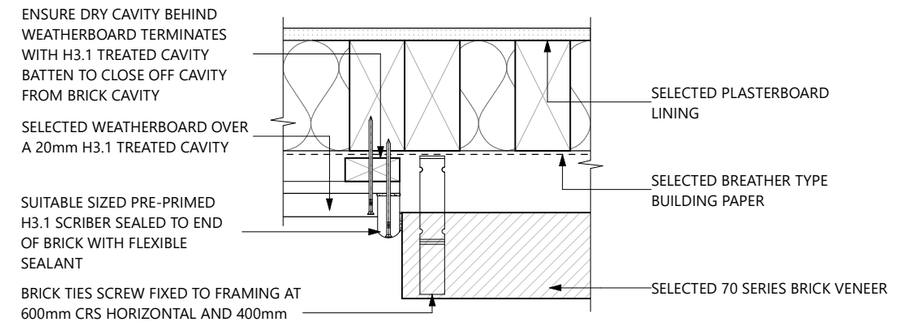

D16 - BRICK TO WEATHERBOARD HORIZONTAL JOINT 1:5

G.J. Gardner. HOMES

COPYRIGHT - THIS DRAWING REMAINS THE PROPERTY OF G.J. GARDNER HOMES AND IS PROVIDED FOR THE USE DESCRIBED AND MAY NOT BE USED OR REPRODUCED IN WHOLE OR IN PART WITHOUT PERMISSION

SUDFELT CONSTRUCTION LTD
WHANGAREI / KAIPARA
FRANCHISEE FOR
G.J.GARDNER HOMES
14 PERCY STREET,
KENSINGTON
P (09) 437 5666
www.gjgardner.co.nz

ALL CONSTRUCTION TO COMPLY WITH THE LOCAL AUTHORITY REQUIREMENTS, NZ BUILDING CODE/APPROVED DOCUMENTS, AND MEANS OF COMPLIANCE, INCL. NZS3604:2011

ALL DIMENSION AND LEVELS ARE TO BE CHECKED BY CONTRACTOR PRIOR TO COMMENCEMENT OF WORK. CONTRACTOR TO REPORT ANY DISCREPANCY.

DO NOT SCALE OFF PLANS

NEW DWELLING FOR
EDGE & RANDELL
LOT 8 SAMPSONS WAY
DARGAVILLE
KAIPARA

CONSENT

LEGAL DESCRIPTION
LOT NUMBER: **8**
DP NUMBER: **542244**

SITE INFORMATION
SITE AREA: **619m²**
CORROSION: **C**
DISTRICT PLAN ZONE: **RESIDENTIAL**
WIND ZONE: **HIGH**

DETAILS - CLADDING

JOB No: **390076**
SHEET SIZE: **A3**
SCALE: **1:5**
DRAWN: **C. LIENERT**
PUBLISHED: **30/03/2021**
SHEET: 19
CHECKED: MS

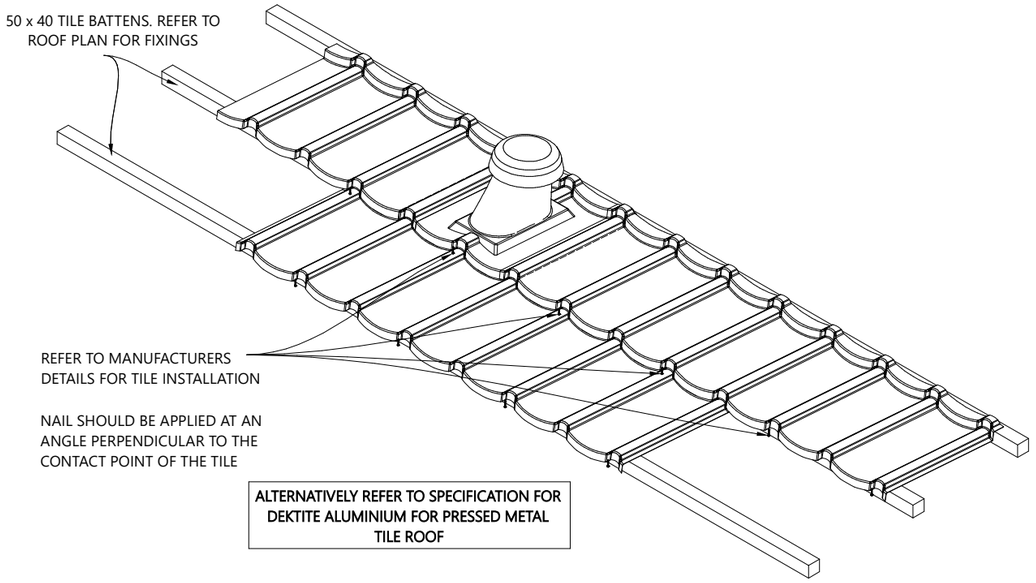

D
-

METAL TILE MANUFACTURERS SANITARY VENT
1:10

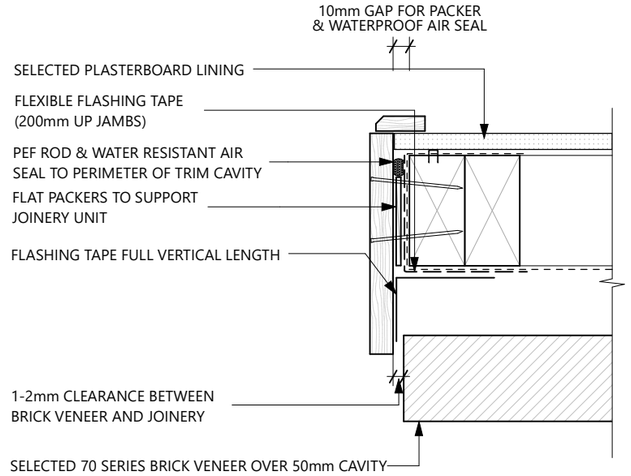

GARAGE DOOR JAMB DETAIL (BRICK) 1:5

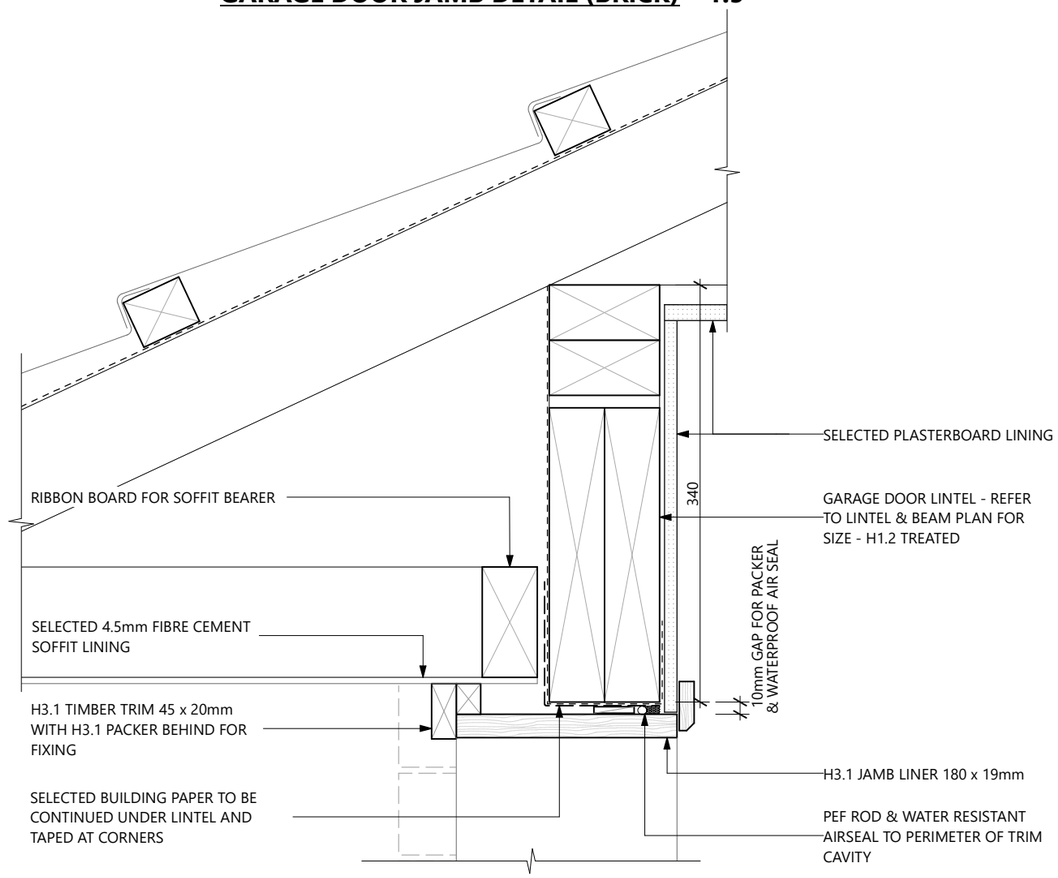

GARAGE DOOR HEAD DETAIL (BRICK) 1:5

D
-

GARAGE DOOR DETAIL
1:5

G.J. Gardner. HOMES

COPYRIGHT - THIS DRAWING REMAINS THE PROPERTY OF G.J. GARDNER HOMES AND IS PROVIDED FOR THE USE DESCRIBED AND MAY NOT BE USED OR REPRODUCED IN WHOLE OR IN PART WITHOUT PERMISSION

SUDFELT CONSTRUCTION LTD
WHANGAREI / KAIPARA
FRANCHISEE FOR
G.J.GARDNER HOMES
14 PERCY STREET,
KENSINGTON
P (09) 437 5666
www.gjgardner.co.nz

ALL CONSTRUCTION TO COMPLY WITH THE LOCAL AUTHORITY REQUIREMENTS, NZ BUILDING CODE/APPROVED DOCUMENTS, AND MEANS OF COMPLIANCE, INCL. NZS3604:2011

ALL DIMENSION AND LEVELS ARE TO BE CHECKED BY CONTRACTOR PRIOR TO COMMENCEMENT OF WORK. CONTRACTOR TO REPORT ANY DISCREPANCY.

DO NOT SCALE OFF PLANS

NEW DWELLING FOR
EDGE & RANDELL
LOT 8 SAMPSONS WAY
DARGAVILLE
KAIPARA

CONSENT

LEGAL DESCRIPTION
LOT NUMBER: **8**
DP NUMBER: **542244**
SITE INFORMATION
SITE AREA: **619m²**
CORROSION: **C**
DISTRICT PLAN ZONE: **RESIDENTIAL**
WIND ZONE: **HIGH**

DETAILS - CLADDING

JOB No: **390076**
SHEET SIZE: **A3**
SCALE: **1:5, 1:10**
DRAWN: **C. LIENERT**
PUBLISHED: **30/03/2021**
SHEET: 20
CHECKED: MS

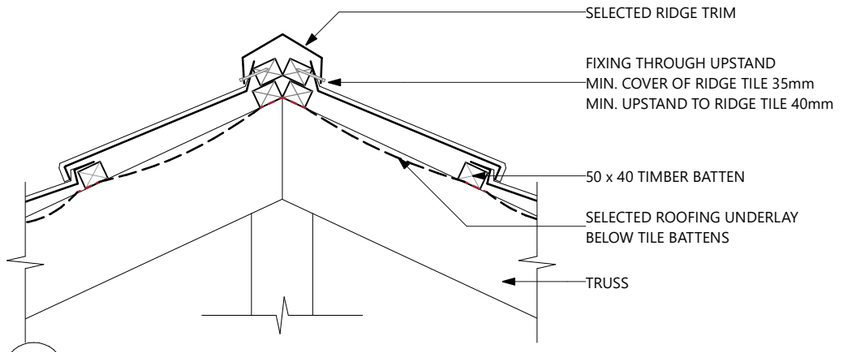

D
-

METAL TILE RIDGE DETAIL
1:10

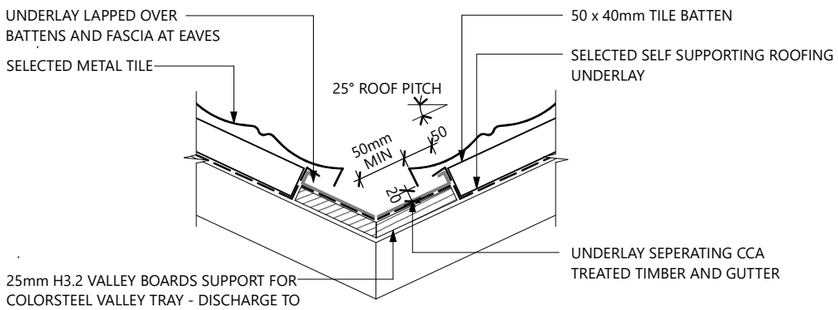

VALLEY TO BE WATERPROOFED IN ACCORDANCE WITH E2 CLAUSE 8.1.6.2

D
-

METAL TILE VALLEY GUTTER
1:10

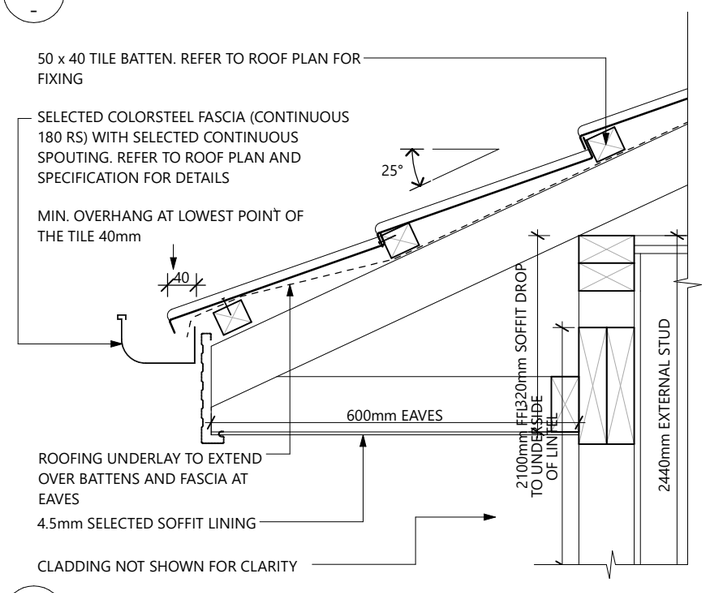

D
-

METAL TILE 25° EAVES DETAIL
1:10

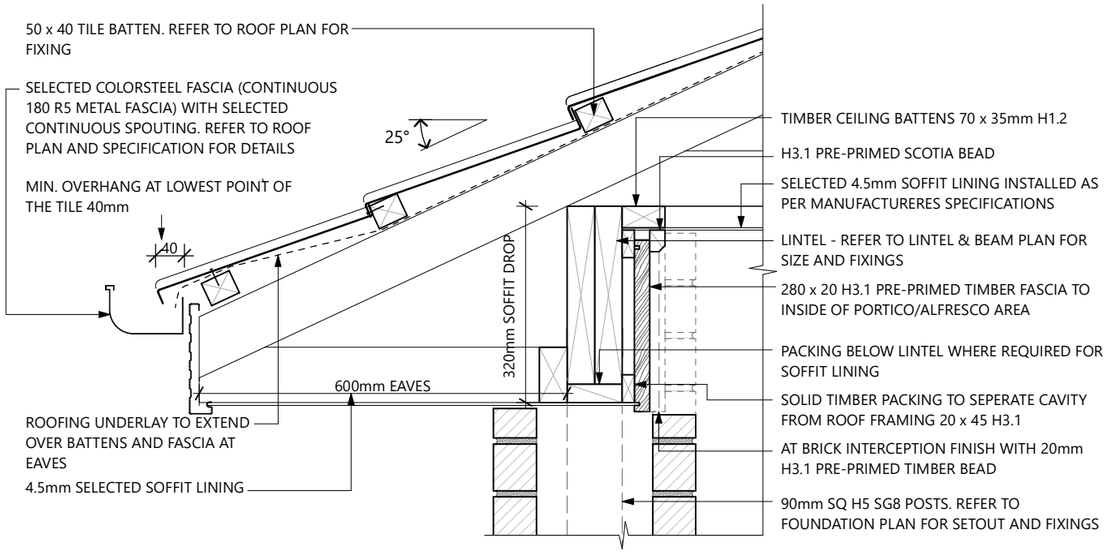

D
-

ENTRY / ALFRESCO ENTRY DETAIL
1:10

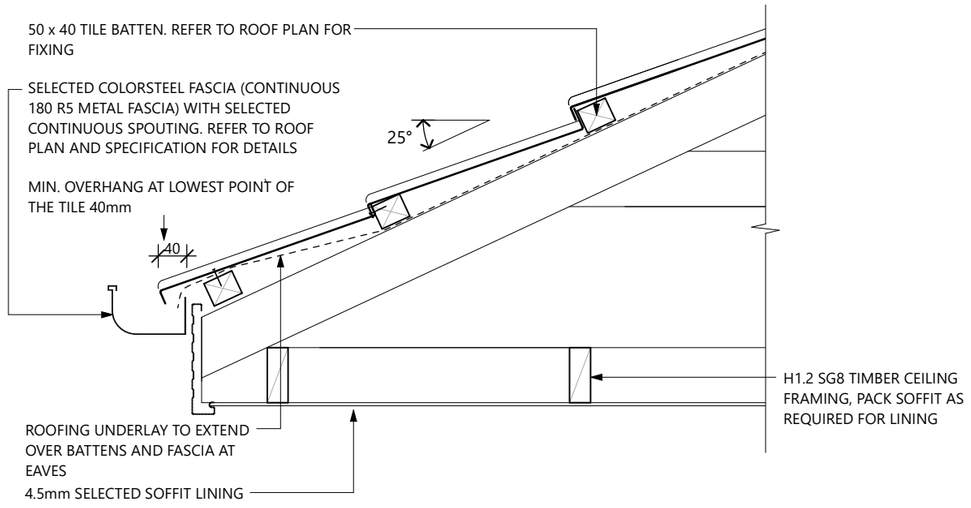

ENTRY SOFFIT DETAIL
CANTILEVERED TRUSS

UPDATED: 03/07/20

D
-

FLAT SOFFIT IN ENTRY EAVES DETAIL
1:10

G.J. Gardner. HOMES

COPYRIGHT - THIS DRAWING REMAINS THE PROPERTY OF G.J. GARDNER HOMES AND IS PROVIDED FOR THE USE DESCRIBED AND MAY NOT BE USED OR REPRODUCED IN WHOLE OR IN PART WITHOUT PERMISSION

SUDFELT CONSTRUCTION LTD
WHANGAREI / KAIPARA
FRANCHISEE FOR
G.J.GARDNER HOMES
14 PERCY STREET,
KENSINGTON
P (09) 437 5666
www.gjgardner.co.nz

ALL CONSTRUCTION TO COMPLY WITH THE LOCAL AUTHORITY REQUIREMENTS, NZ BUILDING CODE/APPROVED DOCUMENTS, AND MEANS OF COMPLIANCE, INCL. NZS3604:2011

ALL DIMENSION AND LEVELS ARE TO BE CHECKED BY CONTRACTOR PRIOR TO COMMENCEMENT OF WORK. CONTRACTOR TO REPORT ANY DISCREPANCY.

DO NOT SCALE OFF PLANS

NEW DWELLING FOR
EDGE & RANDELL
LOT 8 SAMPSONS WAY
DARGAVILLE
KAIPARA

CONSENT

LEGAL DESCRIPTION
LOT NUMBER: **8**
DP NUMBER: **542244**
SITE INFORMATION
SITE AREA: **619m²**
CORROSION: **C**
DISTRICT PLAN ZONE: **RESIDENTIAL**
WIND ZONE: **HIGH**

DETAILS - CLADDING

JOB No: **390076**
SHEET SIZE: **A3**
SCALE: **1:10, 1:5**
DRAWN: **C. LIENERT**
PUBLISHED: **30/03/2021**
SHEET: 21
CHECKED: MS

INSTALL **SIKALASTIC** WATERPROOF MEMBRANE AS PER MANUFACTURERS SPECIFICATIONS AND INSTALLATION DETAILS. TO BE INSTALLED BY A SUITABLY QUALIFIED PERSON AND TO PROVIDE PRODUCER STATEMENT 3 ON INSTALLATION. SILALASTIC WATERPROOFING MEMBRANE INSTALLATION DETAILS TO TAKE PRECDENCE OVER DETAILS.

NOTE:
BATHROOM & ENSUITE - ACRYLIC CLEARLITE SHOWER LINING AND TRAY
REFER TO SPECIFICATION FOR MANUFACTURERES INSTALLATION DETAILS

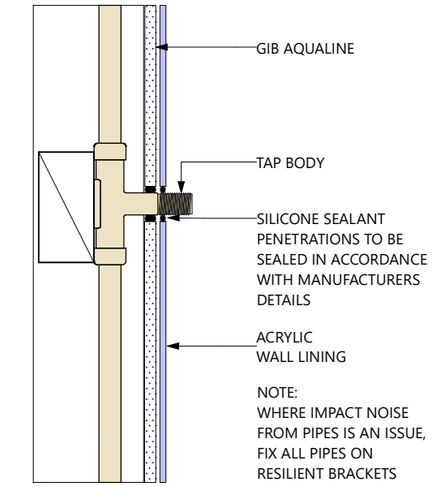

ID03 - PENETRATION DETAIL 1:5

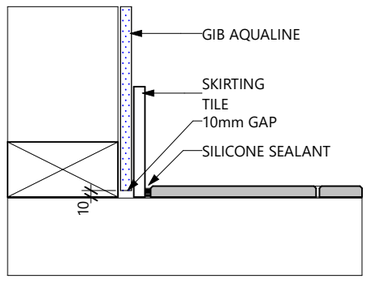

ID01 - WALL/FLOOR DETAIL 1:5

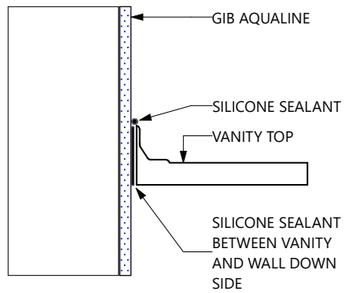

ID02 - VANITY TOP DETAIL 1:5

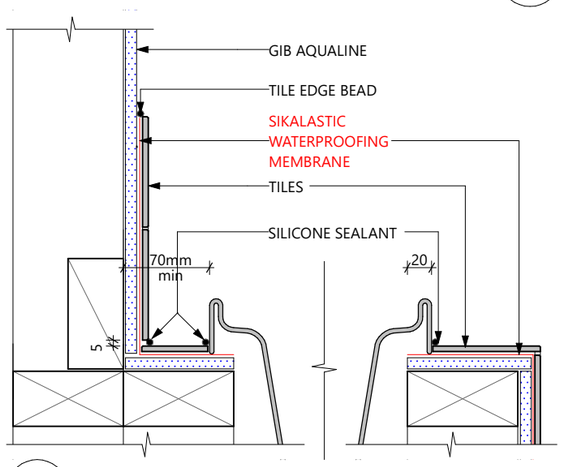

ID05 - BATH IN CRADLE DETAIL 1:5

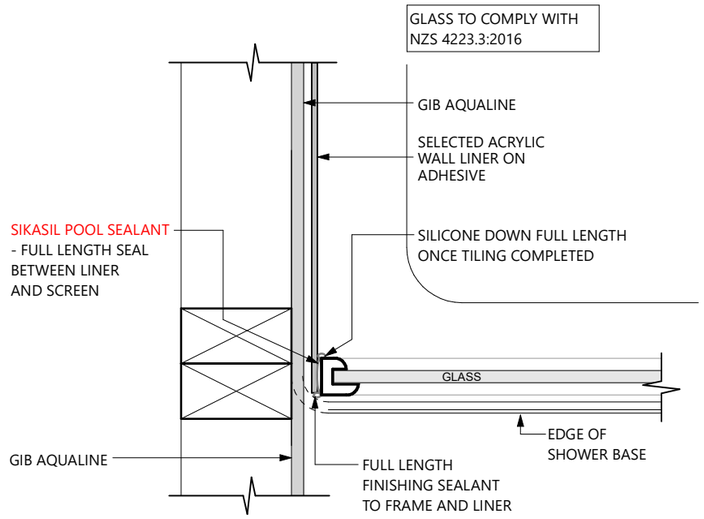

PLAN VIEW

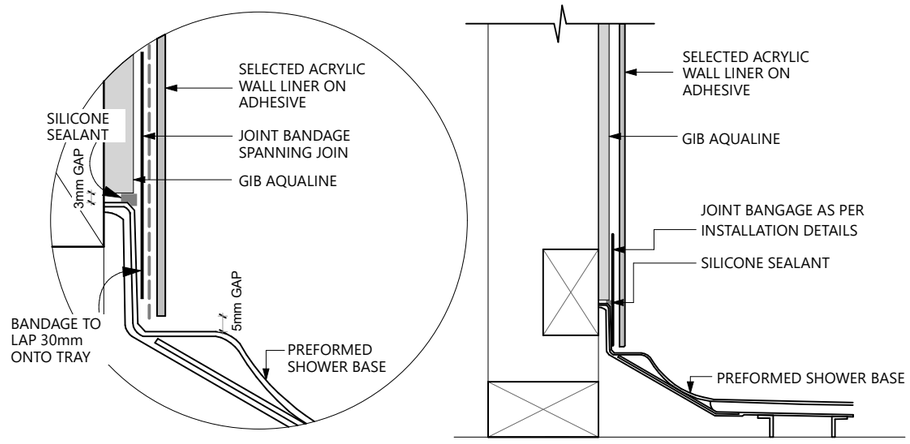

SECTION VIEW

ID07 - ACRYLIC SHOWER BASE WITH TILED WALLS 1:5

G.J. Gardner. HOMES

COPYRIGHT - THIS DRAWING REMAINS THE PROPERTY OF G.J. GARDNER HOMES AND IS PROVIDED FOR THE USE DESCRIBED AND MAY NOT BE USED OR REPRODUCED IN WHOLE OR IN PART WITHOUT PERMISSION

SUDFELT CONSTRUCTION LTD
WHANGAREI / KAIPARA
FRANCHISEE FOR
G.J.GARDNER HOMES
14 PERCY STREET,
KENSINGTON
P (09) 437 5666
www.gjgardner.co.nz

ALL CONSTRUCTION TO COMPLY WITH THE LOCAL AUTHORITY REQUIREMENTS, NZ BUILDING CODE/APPROVED DOCUMENTS, AND MEANS OF COMPLIANCE, INCL. NZS3604:2011

ALL DIMENSION AND LEVELS ARE TO BE CHECKED BY CONTRACTOR PRIOR TO COMMENCEMENT OF WORK. CONTRACTOR TO REPORT ANY DISCREPANCY.

DO NOT SCALE OFF PLANS

NEW DWELLING FOR
EDGE & RANDELL
LOT 8 SAMPSONS WAY
DARGAVILLE
KAIPARA

CONSENT

LEGAL DESCRIPTION
LOT NUMBER: **8**
DP NUMBER: **542244**
SITE INFORMATION
SITE AREA: **619m²**
CORROSION: **C**
DISTRICT PLAN ZONE: **RESIDENTIAL**
WIND ZONE: **HIGH**

DETAIL - WET AREA

JOB No: **390076**
SHEET SIZE: **A3**
SCALE: **1:5**
DRAWN: **C. LIENERT**
PUBLISHED: **30/03/2021**
SHEET: 22
CHECKED: MS

PRIOR TO COMMENCEMENT OF FOUNDATION CONSTRUCTION

1. FOUNDATION PLAN TO BE READ IN CONJUNCTION WITH ENGINEER'S SITE SUITABILITY REPORT

2. CONTRACTOR IS TO LOCATE ALL EXISTING SEWER & STORMWATER PIPES BEFORE DIGGING ANY FOOTINGS.

3. CONTRACTOR IS TO REFER TO ENGINEERS FOUNDATION SPECIFICATIONS & CONDITIONS BEFORE DIGGING ANY FOOTINGS OR ORDERING ANY MATERIALS.

ALL DIMENSIONS TO EDGE OF SLAB INCLUDE 120mm BRICK REBATES
REFER TO WALL FRAMING PLAN FOR FRAMING SET OUT DIMENSIONS

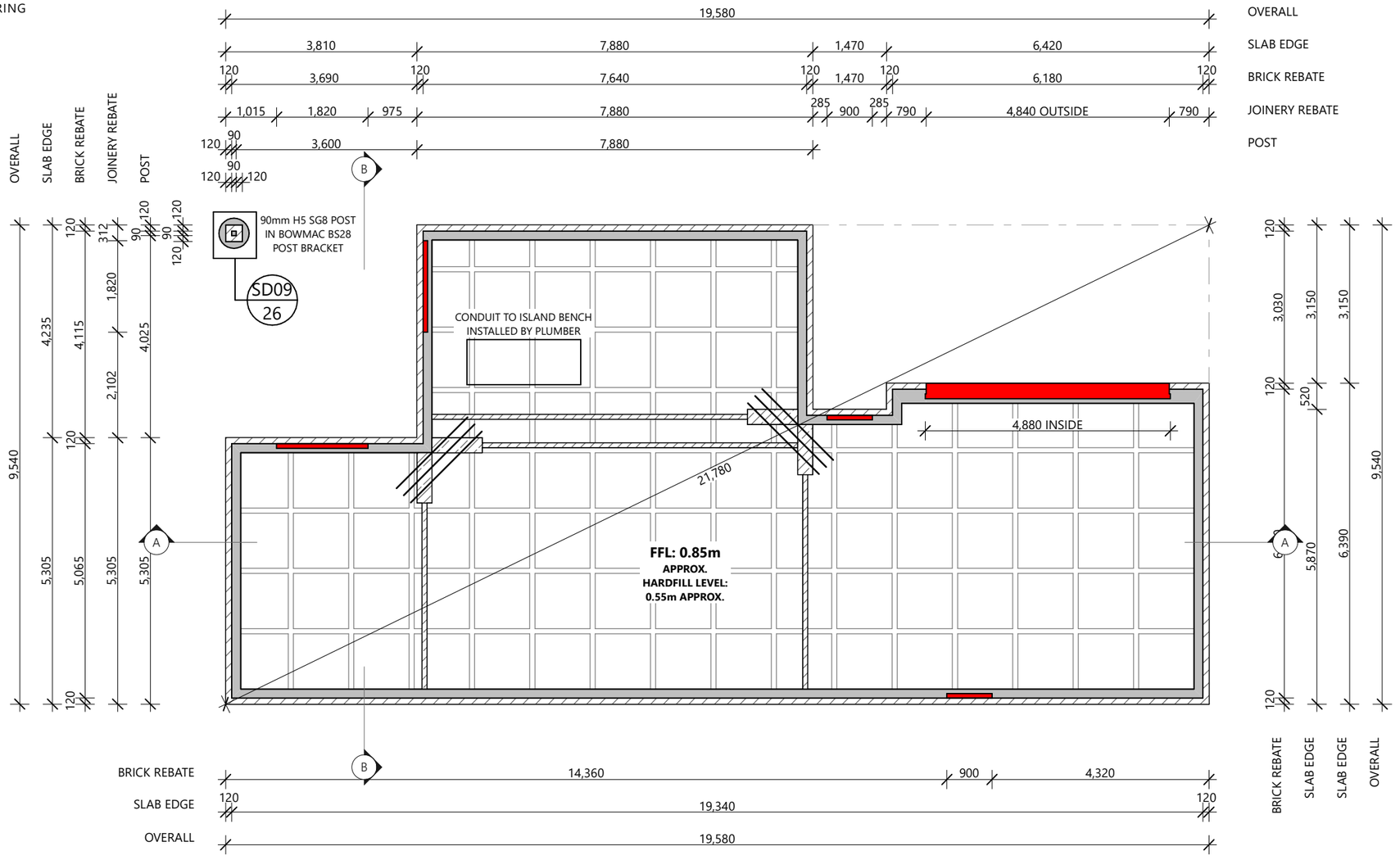

1. REFER TO G J GARDNER DRAWINGS FOR LOCATION OF ALL UNDERSLAB SERVICES AND SERVICE PENETRATIONS THROUGH FLOOR SLAB. ALL SERVICE PENETRATIONS ARE TO BE COORDINATED WITH POD LAYOUT PRIOR TO CONSTRUCTION TO ENSURE SERVICE PENETRATIONS THROUGH RIB RAFT ARE IN ACCORDANCE WITH RIBRAFT TECHNICAL MANUAL SECTION 6.3: SERVICES DETAILING

2. ALL FOUNDATION CONCRETE TO BE MIN 25**MPA** 28 DAY STRENGTH RAFTMIX.

3. RIB RAFT FLOOR SLAB TO BE CONSTRUCTED IN ACCORDANCE WITH THE FIRTH RIB RAFT MANUAL.

4. **85MM** THICK SLAB REINFORCED WITH **SE82 G500E** DUCTILE REINFORCING MESH WITH 30MM TOP COVER. WHERE RIGID FLOOR COVERINGS ARE PROPOSED (TILES, ETC.) USE **SE92 G500E** MESH.

5. GARAGE SLAB IS DESIGNED FOR RESIDENTIAL USE ONLY WITH VEHICLE LIMITED TO 2,500KG GROSS (AS/NZS1170 LOADING 2.5KPA/13KN)

6. RIBRAFT TO BE CONSTRUCTED ON DPM MATERIAL IN ACCORDANCE WITH NZS3604:2011 OVER 25MM TO 50mm MAXIMUM SAND BLINDING ON A **150mm** MINIMUM COMPACTED HARD FILL. HARD FILL SHALL EXTEND 1000MM MINIMUM BEYOND THE PERIMETER OR TWICE THE HARDFILL DEPTH (WHICHEVER IS THE GREATER.)

7. CONTROL JOINTS IN BRICK VENEER SHOULD BE ADOPTED AT 5.0M CRS MAX.

NOTE:
100mm RIB EXTENNDING BEYOND 300mm RIB PLACED CENTRALLY, MAY BE SHIFTED 100mm EACH WAY TO SUIT POD LAYOUT

FOUNDATION KEY

- 300mm WIDE x 310mm DEEP RIBRAFT EDGE BEAM WITH 120mm WIDE BRICK REBATE, 150mm DEEP
- 300mm SLAB THICKENING BEAM FOR INTERNAL LOAD BEARING WALL SUPPORT
- 100mm RIBRAFT INTERNAL BEAM (POD LAYOUT GOVERNED BY RIB)
- 100mm RIBRAFT INTERNAL BEAM
- 1100 x 1100 x 300 THICK RIBRAFT POLYSTYRENE PODS
- 25mm DEEP x 85mm WIDE REBATE FOR FULL HEIGHT JOINERY WHERE SPECIFIED
- 400mm WIDE x 395mm DEEP RIBRAFT EDGE BEAM WITH 20mm DEEP, 310mm WIDE GARAGE DOOR REBATE
- CORNER STEEL 3/HD12 2000mm @ 200mm CRS
- POST FOOTING 600mm ø WIDE x 1,000mm DEEP FOOTING

RS Eng Ltd
Consulting Engineers
This drawing is in accordance with our calculations where applicable.
per .....
Chartered Professional Engineer

G.J. Gardner. HOMES
COPYRIGHT - THIS DRAWING REMAINS THE PROPERTY OF G.J. GARDNER HOMES AND IS PROVIDED FOR THE USE DESCRIBED AND MAY NOT BE USED OR REPRODUCED IN WHOLE OR IN PART WITHOUT PERMISSION

SUDFELT CONSTRUCTION LTD
WHANGAREI / KAIPARA
FRANCHISEE FOR
G.J.GARDNER HOMES
14 PERCY STREET,
KENSINGTON
P (09) 437 5666
www.gjgardner.co.nz

ALL CONSTRUCTION TO COMPLY WITH THE LOCAL AUTHORITY REQUIREMENTS, NZ BUILDING CODE/APPROVED DOCUMENTS, AND MEANS OF COMPLIANCE, INCL. NZS3604:2011

ALL DIMENSION AND LEVELS ARE TO BE CHECKED BY CONTRACTOR PRIOR TO COMMENCEMENT OF WORK. CONTRACTOR TO REPORT ANY DISCREPANCY.

DO NOT SCALE OFF PLANS

NEW DWELLING FOR
EDGE & RANDELL
LOT 8 SAMPSONS WAY
DARGAVILLE
KAIPARA

CONSENT

LEGAL DESCRIPTION
LOT NUMBER: **8**
DP NUMBER: **542244**

SITE INFORMATION
SITE AREA: **619m²**
CORROSION: **C**
DISTRICT PLAN ZONE: **RESIDENTIAL**
WIND ZONE: **HIGH**

FOUNDATION

JOB No: **390076**
SHEET SIZE: **A3**
SCALE: **1:100**
DRAWN: **C. LIENERT**
PUBLISHED: **23/03/2021**
SHEET: 23
CHECKED: MS

HARDFILL TO BE A MINIMUM OF 150mm COMPACTED AND TO EXTEND 1.0m FROM PERIMETER EDGE OR TWICE THE HARDFILL DEPTH (WHICHEVER THE GREATER). 25mm MIN. SAND BLINDING ABOVE TO EXTEND 500mm MIN BEYOND SLAB PERIMETER.
REFER TO ARCHITECTURAL DETAILS FOR WATERPROOFING AND CLADDING REQUIREMENTS.

MESH SUBSTITUTES & SLAB LENGTHS

SE72	UP TO 23m
SE82	UP TO 30m
SE62 + 1/HD12 TOP OF EACH RIB	UP TO 30m

HIGHLIGHTED RED, OPTION SHOWN BELOW
MESH LARGER THAN SE72 REQUIRE A 95mm SLAB

MINIMUM REINFORCING COVER:

AGAINST GROUND - 75mm
AGAINST FORMWORK - 50mm
TOP COVER TO MESH - 30mm

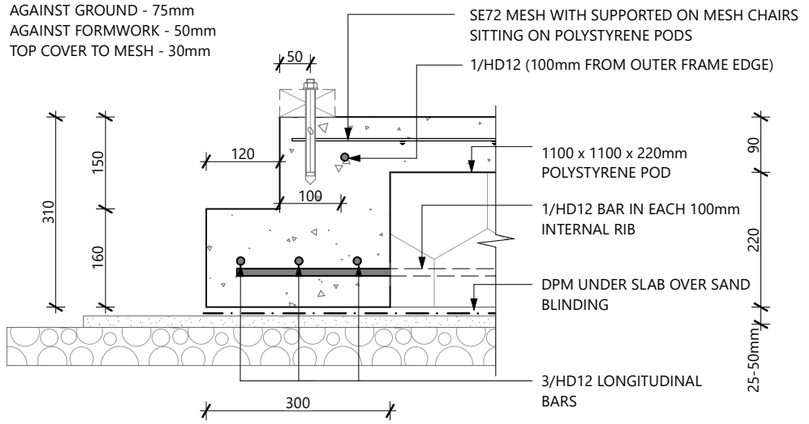

SD01 / 24 — 300mm RIBRAFT EDGE BEAM WITH REBATE 1:10

MINIMUM REINFORCING COVER:

AGAINST GROUND - 75mm
AGAINST FORMWORK - 50mm
TOP COVER TO MESH - 30mm
CONCRETE DRIVE INDICATIVE

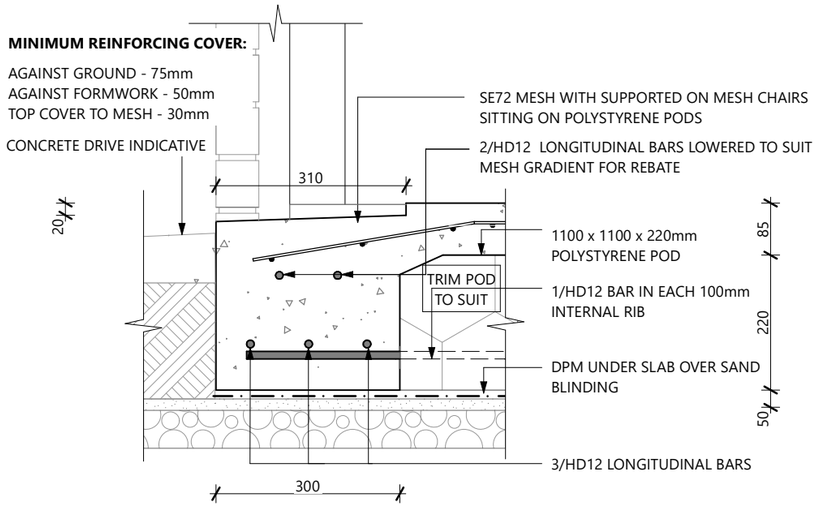

SD02 / 24 — RIBRAFT GARAGE DOOR REBATE DETAIL 1:10

MINIMUM REINFORCING COVER:

AGAINST GROUND - 75mm
AGAINST FORMWORK - 50mm
TOP COVER TO MESH - 30mm

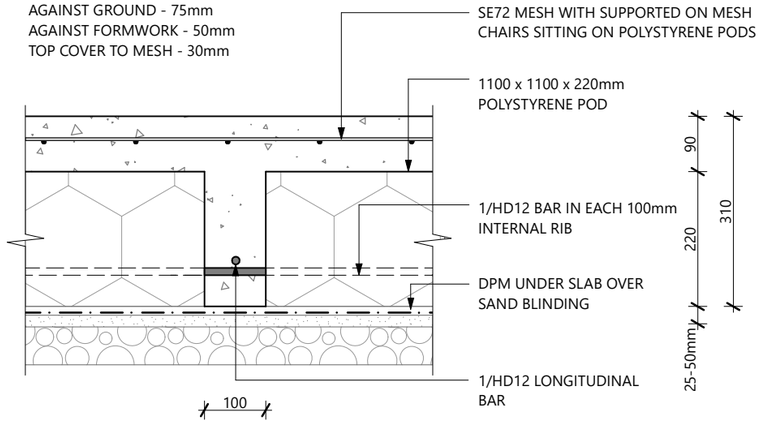

SD03 / 24 — 100mm RIBRAFT INTERNAL BEAM 1:10

MINIMUM REINFORCING COVER:

AGAINST GROUND - 75mm
AGAINST FORMWORK - 50mm
TOP COVER TO MESH - 30mm

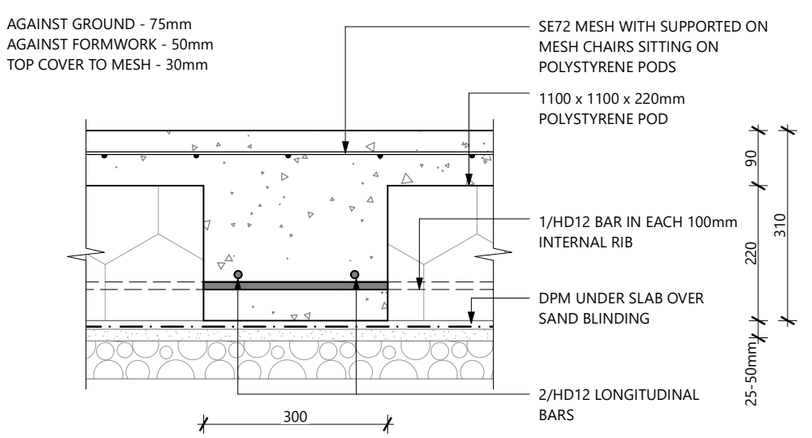

SD04 / 24 — 300mm RIBRAFT INTERNAL BEAM 1:10

RS Eng Ltd
Consulting Engineers
This drawing is in accordance with our calculations where applicable.
per .....
Chartered Professional Engineer

G.J. Gardner. HOMES

COPYRIGHT - THIS DRAWING REMAINS THE PROPERTY OF G.J. GARDNER HOMES AND IS PROVIDED FOR THE USE DESCRIBED AND MAY NOT BE USED OR REPRODUCED IN WHOLE OR IN PART WITHOUT PERMISSION

SUDFELT CONSTRUCTION LTD
WHANGAREI / KAIPARA
FRANCHISEE FOR
G.J.GARDNER HOMES
14 PERCY STREET,
KENSINGTON
P (09) 437 5666
www.gjgardner.co.nz

ALL CONSTRUCTION TO COMPLY WITH THE LOCAL AUTHORITY REQUIREMENTS, NZ BUILDING CODE/APPROVED DOCUMENTS, AND MEANS OF COMPLIANCE, INCL. NZS3604:2011

ALL DIMENSION AND LEVELS ARE TO BE CHECKED BY CONTRACTOR PRIOR TO COMMENCEMENT OF WORK. CONTRACTOR TO REPORT ANY DISCREPANCY.

DO NOT SCALE OFF PLANS

NEW DWELLING FOR
EDGE & RANDELL
LOT 8 SAMPSONS WAY
DARGAVILLE
KAIPARA

CONSENT

LEGAL DESCRIPTION
LOT NUMBER: **8**
DP NUMBER: **542244**

SITE INFORMATION
SITE AREA: **619m²**
CORROSION: **C**
DISTRICT PLAN ZONE: **RESIDENTIAL**
WIND ZONE: **HIGH**

DETAILS - FOUNDATION

JOB No: **390076**
SHEET SIZE: **A3**
SCALE: **1:10**
DRAWN: **C. LIENERT**
PUBLISHED: **23/03/2021**
SHEET: 24
CHECKED: MS

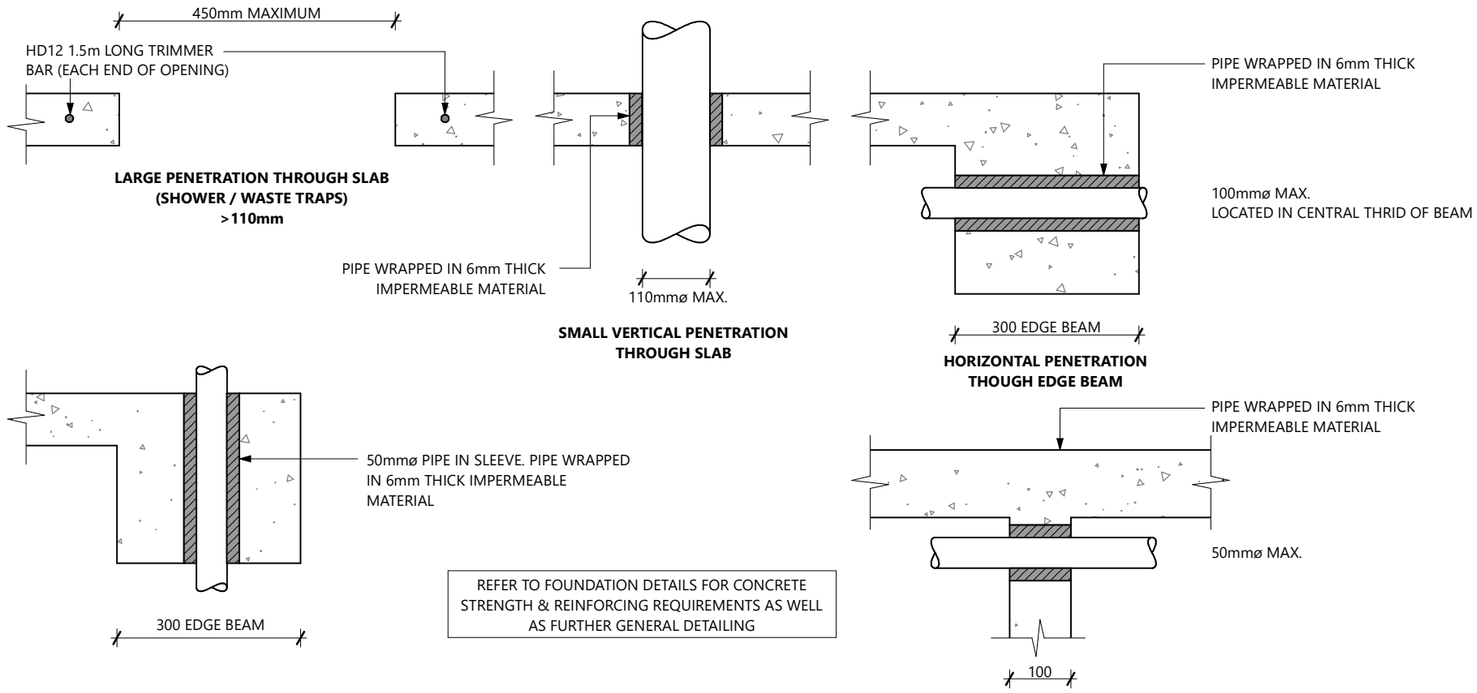

REFER TO FOUNDATION DETAILS FOR CONCRETE STRENGTH & REINFORCING REQUIREMENTS AS WELL AS FURTHER GENERAL DETAILING

SD05
25

RIBRAFT PIPE PENETRATION
1:10

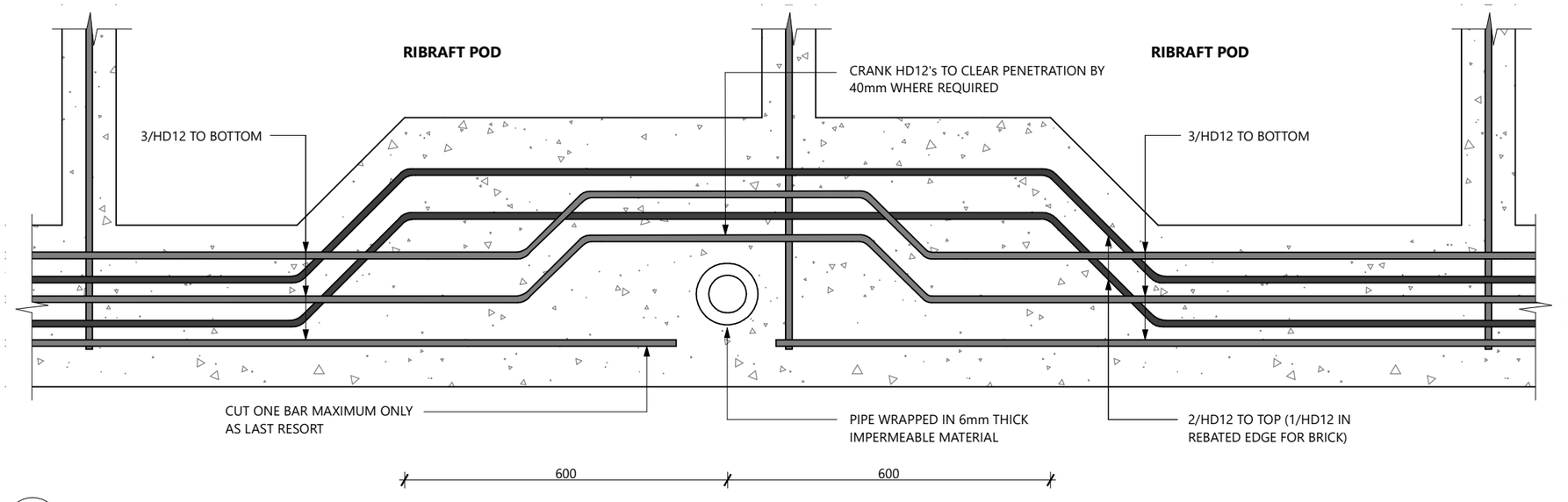

SD06
25

RIBRAFT SERVICES AT EDGE BEAM (100mmø PIPE MAX.)
1:10

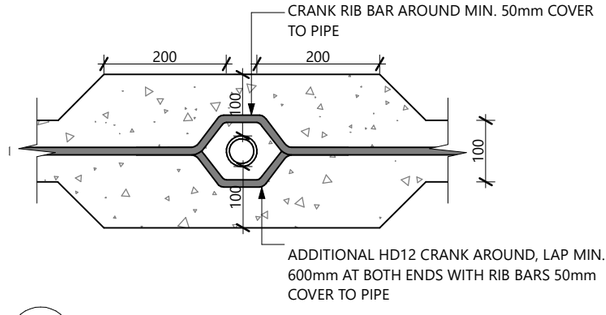

SD07
25

RIBRAFT TYPICAL DETAIL AROUND PIPE
1:10

RS Eng Ltd
Consulting Engineers
This drawing is in accordance with our calculations where applicable.
per .....
Chartered Professional Engineer

G.J. Gardner. HOMES

COPYRIGHT - THIS DRAWING REMAINS THE PROPERTY OF G.J. GARDNER HOMES AND IS PROVIDED FOR THE USE DESCRIBED AND MAY NOT BE USED OR REPRODUCED IN WHOLE OR IN PART WITHOUT PERMISSION

SUDFELT CONSTRUCTION LTD
WHANGAREI / KAIPARA
FRANCHISEE FOR
G.J.GARDNER HOMES
14 PERCY STREET,
KENSINGTON
P (09) 437 5666
www.gjgardner.co.nz

ALL CONSTRUCTION TO COMPLY WITH THE LOCAL AUTHORITY REQUIREMENTS, NZ BUILDING CODE/APPROVED DOCUMENTS, AND MEANS OF COMPLIANCE, INCL. NZS3604:2011

ALL DIMENSION AND LEVELS ARE TO BE CHECKED BY CONTRACTOR PRIOR TO COMMENCEMENT OF WORK. CONTRACTOR TO REPORT ANY DISCREPANCY.

DO NOT SCALE OFF PLANS

NEW DWELLING FOR
EDGE & RANDELL
LOT 8 SAMPSONS WAY
DARGAVILLE
KAIPARA

CONSENT

LEGAL DESCRIPTION
LOT NUMBER: **8**
DP NUMBER: **542244**

SITE INFORMATION
SITE AREA: **619m²**
CORROSION: **C**
DISTRICT PLAN ZONE: **RESIDENTIAL**
WIND ZONE: **HIGH**

DETAILS - FOUNDATION

JOB No: **390076**
SHEET SIZE: **A3**
SCALE: **1:10, 1:20**
DRAWN: **C. LIENERT**
PUBLISHED: **23/03/2021**
SHEET: 25
CHECKED: MS

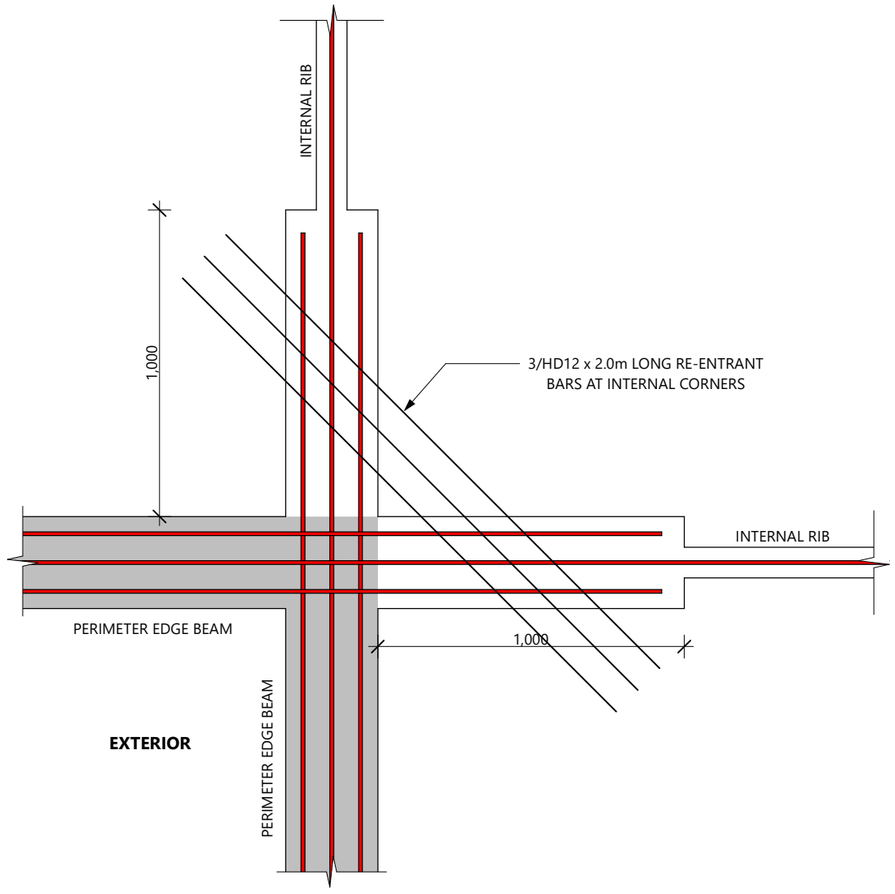

NOTE: TOP STEEL NOT SHOWN FOR CLARITY

SD08
26

TYPICAL RE-ENTRANT CORNER DETAIL
1:20

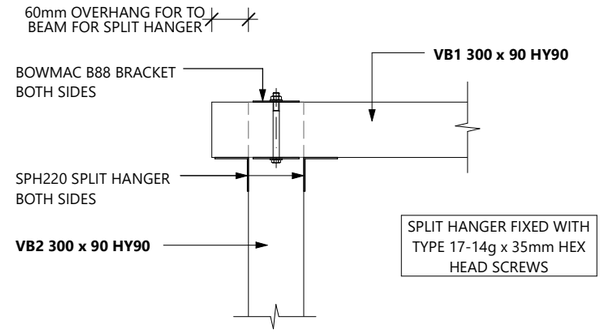

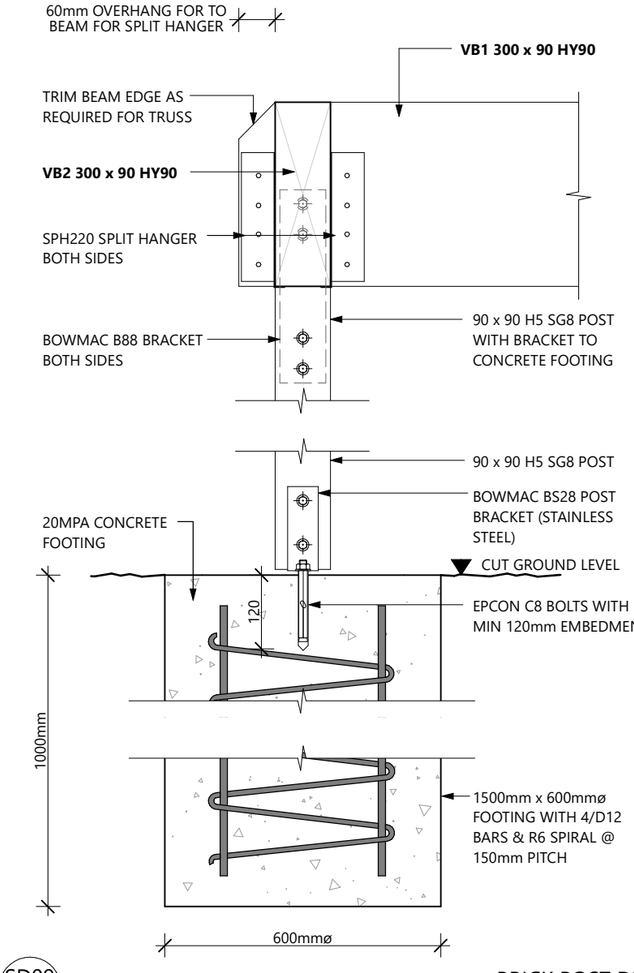

SD09
26

BRICK POST DETAIL
1:10

RS Eng Ltd
Consulting Engineers
This drawing is in accordance with our calculations where applicable.
per .....
Chartered Professional Engineer

COPYRIGHT - THIS DRAWING REMAINS THE PROPERTY OF G.J. GARDNER HOMES AND IS PROVIDED FOR THE USE DESCRIBED AND MAY NOT BE USED OR REPRODUCED IN WHOLE OR IN PART WITHOUT PERMISSION

G.J. Gardner. HOMES

SUDFELT CONSTRUCTION LTD
WHANGAREI / KAIPARA
FRANCHISEE FOR
G.J.GARDNER HOMES
14 PERCY STREET,
KENSINGTON
P (09) 437 5666
www.gjgardner.co.nz

ALL CONSTRUCTION TO COMPLY WITH THE LOCAL AUTHORITY REQUIREMENTS, NZ BUILDING CODE/APPROVED DOCUMENTS, AND MEANS OF COMPLIANCE, INCL. NZS3604:2011

ALL DIMENSION AND LEVELS ARE TO BE CHECKED BY CONTRACTOR PRIOR TO COMMENCEMENT OF WORK. CONTRACTOR TO REPORT ANY DISCREPANCY.

DO NOT SCALE OFF PLANS

NEW DWELLING FOR
EDGE & RANDELL
LOT 8 SAMPSONS WAY
DARGAVILLE
KAIPARA

CONSENT

LEGAL DESCRIPTION
LOT NUMBER: **8**
DP NUMBER: **542244**

SITE INFORMATION
SITE AREA: **619m²**
CORROSION: **C**
DISTRICT PLAN ZONE: **RESIDENTIAL**
WIND ZONE: **HIGH**

DETAILS - FOUNDATION

JOB No: **390076**
SHEET SIZE: **A3**
SCALE: **1:20, 1:10**
DRAWN: **C. LIENERT**
PUBLISHED: **23/03/2021**
SHEET: 26
CHECKED: MS

G.J. Gardner. HOMES

Reference: 390076
Date: 31/03/2021

H1 ENERGY EFFICIENCY CALCULATIONS FOR RESIDENTIAL DWELLING FOR EDGE & RANDELL AT SAMPSONS WAY DARGAVILLE, LOT 8, DP 542244

Joinery ID	Height (mm)	Width (mm)	Area (m^2)	Orientation
W01	1300	1500	1.95	NORTH
W02	1300	1500	1.95	NORTH
W03	600	1500	0.9	WEST
W04	1800	600	1.08	SOUTH
W05	1300	1500	1.95	SOUTH
W06	1800	600	1.08	SOUTH
D02	2090	880	1.84	NORTH
D03	2090	1800	3.76	WEST
D04	2090	1800	3.76	NORTH

Note: Joinery Units D01, D052 & W07are excluded from the calculations as they are outside of the proposed thermal envelope

Glazing required to be <30% of the total wall area (or <50% to meet the 'Great Northern Glazing Method.'

EAST, SOUTH & WEST GLAZING	
TOTAL GLAZING EAST/SOUTH/WEST	8.77
TOTAL WALL EAST/SOUTH/WEST	76.44
TOTAL GLAZING TO WALL AREA	**11.48%**

NORTH, EAST, SOUTH & WEST	
TOTAL GLAZING N, E, S & W	18.27
TOTAL WALL N, E, S & W	108.24
TOTAL GLAZING TO WALL AREA	**16.88%**

G.J. Gardner. HOMES

Construction R-Value Required to meet the Schedule Method Compliance Path (Climate Zone 1):

CONSTRUCTION R-VALUE REQUIRED:		CONSTRUCTION R-VALUE ACHIEVED:	
WALL (BRICK)	R1.9	PINK BATTS R2.2	R2.02
WALL (WEATHERBOARD)	R1.9	PINK BATTS R2.2	R2.03
WALL (INTERNAL GARAGE)	R1.9	PINK BATTS R2.2	R2.46
ROOF	R2.9	PINK BATTS R3.2	R3.45
FLOOR	R1.3	FIRTH RIBRAFT SLAB	R1.3
GLAZING	R0.26	DOUBLE GLAZING	R0.26

H1 ENERGY EFFICIENCY ACHIEVED VIA THE SCHEDULE METHOD IN NZS4218 FOR COMPLIANCE WITH H1/AS1 OF THE NZ BUILDING CODE

Sudfelt Construction Ltd – Whangarei / Kaipara Franchisee for G.J. Gardner Homes
Ph: (09) 437 5666 | Web: www.gjgardner.co.nz

G.J. Gardner. HOMES

Construction R-value Calculator

This webpage calculates the R-value of walls, roofs and suspended floors for most insulation material R-values. It uses the "iso-thermal planes" method, the same method as used in NZS4214:2006.

Some of the possible material combinations may not be suitable for actual constructions, i.e. EPS based claddings directly fixed on timber framing. Please make sure to select only appropriate material combinations.

If your construction is not listed, please send an e-mail to designnavigator@gmail.com with a description and a detail drawing (pdf) of it.

Please select the element type. Then choose the construction details and enter the R-value of the insulation either directly in the text box or by choosing a product from the right panel.

- Floors ○
- Walls ◉
- Roofs ○

Date: 24/09/2020

90mm Timber Framed Wall - Brick — 2.03 m²°C/W

Type: Wall: Timber Frame with vented Cavity

Timber Frame with vented Cavity [view detail]

external surface 0.03	
Cladding : 70mm brick *R-value: 0.06*	
Air Barrier : Building paper *R-value: 0.01*	
Timber Frame & Cavity : 90mm, studs @ 400mm, dwangs @ 800mm	
Wall Frame Area: 17.9%	*Cavity Area: 82.1%*
15-90mm vented cavity (all R-values on ext. side of cavity will be halved), R: 0.08	15-90mm vented cavity (all R-values on ext. side of cavity will be halved), R: 0.08
Framing : *R-value: 0.75*	Pink®Batts® R2.4 Wall 2.4
	still Airgap: none *R-value: 0.00*
Wall Lining : Gypsum plasterboard 10mm *R-value: 0.04*	
internal surface 0.09	

Print Page

Current NZS4218:2009 Schedule Method minimum R-value Targets (non-solid contruction):

	Zone 1	Zone 2	Zone 3
Roof	R-2.9	R-2.9	R-3.3
Wall	R-1.9	R-1.9	R-2.0
Floor	R-1.3	R-1.3	R-1.3
Glazing (vertical)	R-0.26	R-0.26	R-0.26
Glazing (skylights)	R-0.26	R-0.26	R-0.31

Australian Building Code Targets:

	All Zones except NSW	NSW
Roof	R-4.1	R-6.3
Wall	R-2.9	R-3.8

G.J. Gardner. HOMES

Construction R-value Calculator

This webpage calculates the R-value of walls, roofs and suspended floors for most insulation material R-values. It uses the "iso-thermal planes" method, the same method as used in NZS4214:2006.

Some of the possible material combinations may not be suitable for actual constructions, i.e. EPS based claddings directly fixed on timber framing. Please make sure to select only appropriate material combinations.

If your construction is not listed, please send an e-mail to designnavigator@gmail.com **with a description and a detail drawing (pdf) of it.**

Please select the element type. Then choose the construction details and enter the R-value of the insulation either directly in the text box or by choosing a product from the right panel.

- Floors ○
- Walls ◉
- Roofs ○

Date: 24/09/2020

90mm Timber Framed Wall - Cedar — **2.01** m²°C/W

Type: Wall: Timber Frame with vented Cavity

Timber Frame with vented Cavity [view detail]

external surface 0.03	
Cladding : Vertical weatherboard *R-value: 0.16*	
Air Barrier : Building paper *R-value: 0.01*	
Timber Frame & Cavity : 90mm, studs @ 400mm, dwangs @ 480mm	
Wall Frame Area: 21.0%	*Cavity Area: 79.0%*
15-90mm vented cavity (all R-values on ext. side of cavity will be halved), R: 0.08	15-90mm vented cavity (all R-values on ext. side of cavity will be halved), R: 0.08
Framing : *R-value: 0.75*	Pink®Batts® R2.4 Wall 2.4
	still Airgap: none *R-value: 0.00*
Wall Lining : Gypsum plasterboard 10mm *R-value: 0.04*	
internal surface 0.09	

[Print Page]

Current NZS4218:2009 Schedule Method minimum R-value Targets (non-solid contruction):

	Zone 1	Zone 2	Zone 3
Roof	R-2.9	R-2.9	R-3.3
Wall	R-1.9	R-1.9	R-2.0
Floor	R-1.3	R-1.3	R-1.3
Glazing (vertical)	R-0.26	R-0.26	R-0.26
Glazing (skylights)	R-0.26	R-0.26	R-0.31

Australian Building Code Targets:

	All Zones except NSW	NSW
Roof	R-4.1	R-6.3
Wall	R-2.9	R-3.8

G.J. Gardner. HOMES

Construction R-value Calculator

This webpage calculates the R-value of walls, roofs and suspended floors for most insulation material R-values. It uses the "iso-thermal planes" method, the same method as used in NZS4214:2006.

Some of the possible material combinations may not be suitable for actual constructions, i.e. EPS based claddings directly fixed on timber framing. Please make sure to select only appropriate material combinations.

If your construction is not listed, please send an e-mail to designnavigator@gmail.com with a description and a detail drawing (pdf) of it.

Please select the element type. Then choose the construction details and enter the R-value of the insulation either directly in the text box or by choosing a product from the right panel.

- Floors ○
- Walls ◉
- Roofs ○

Date: 25/09/2020

Internal Timber Wall to Garage — 2.66 m²°C/W

Type: Wall: Timber Frame (direct fixed cladding)

Timber Frame (direct fixed Cladding) [view detail]

external surface 0.03

Cladding : Gypsum plasterboard 10mm into still air (garage, etc.)
R-value: 0.10

Air Barrier : none
R-value: 0.00

Timber Frame & Cavity : no framing (for example SIP Panels)

Wall Frame Area: 0.0% *Cavity Area: 100.0%*

Framing : *R-value: 0.00*

Pink®Batts® R2.4 Wall 2.4

still Airgap: none
R-value: 0.00

Wall Lining : Gypsum plasterboard 10mm
R-value: 0.04

internal surface 0.09

[Print Page]

Current NZS4218:2009 Schedule Method minimum R-value Targets (non-solid contruction):

	Zone 1	Zone 2	Zone 3
Roof	R-2.9	R-2.9	R-3.3
Wall	R-1.9	R-1.9	R-2.0
Floor	R-1.3	R-1.3	R-1.3
Glazing (vertical)	R-0.26	R-0.26	R-0.26
Glazing (skylights)	R-0.26	R-0.26	R-0.31

Australian Building Code Targets:

	All Zones except NSW	NSW
Roof	R-4.1	R-6.3
Wall	R-2.9	R-3.8

G.J. Gardner. HOMES

Construction R-value Calculator

This webpage calculates the R-value of walls, roofs and suspended floors for most insulation material R-values. It uses the "iso-thermal planes" method, the same method as used in NZS4214:2006.

Some of the possible material combinations may not be suitable for actual constructions, i.e. EPS based claddings directly fixed on timber framing. Please make sure to select only appropriate material combinations.

If your construction is not listed, please send an e-mail to designnavigator@gmail.com with a description and a detail drawing (pdf) of it.

Please select the element type. Then choose the construction details and enter the R-value of the insulation either directly in the text box or by choosing a product from the right panel.

- Floors ○
- Walls ○
- Roofs ◉

Date: 24/09/2020

Metal Tile Roof — 3.90 m²°C/W

Type: Roof: Timber framed truss Roof, direct fixed or battened flat Ceiling

Timber framed Roof, direct fixed or battened flat Ceiling [view detail]

external surface 0.03

Roofing : Metal tiles with building paper
R-value: 0.01

Pink®Batts® R3.6 Ceiling 3.6

Timber Frame & Cavity :

no framing (for example SIP Panels)

Roof Frame Area: 0.0% — Roof space (still air) 0.11 — Framing : *R-value: 0.00*

Cavity Area: 100.0% — Roof space (still air) 0.11 — Insulation :

Roof Lining : Gypsum plasterboard 13mm
R-value: 0.06

internal surface 0.09

Non-IC-rated recessed downlights
Ceiling Area [m²]: Number of downlights: Clearance from lamp holder side [m]:

Print Page

Current NZS4218:2009 Schedule Method minimum R-value Targets (non-solid contruction):

	Zone 1	Zone 2	Zone 3
Roof	R-2.9	R-2.9	R-3.3
Wall	R-1.9	R-1.9	R-2.0
Floor	R-1.3	R-1.3	R-1.3
Glazing (vertical)	R-0.26	R-0.26	R-0.26
Glazing (skylights)	R-0.26	R-0.26	R-0.31

Australian Building Code Targets:

	All Zones except NSW	NSW
Roof	R-4.1	R-6.3
Wall	R-2.9	R-3.8

KAIPARA DISTRICT
Kaipara te Oranganui • Two Oceans Two Harbours

Vehicle Crossing Permit Application

KAIPARA DISTRICT COUNCIL

Application No .....

Resource Consent No .....
(only required if current RC exists of which a VC permit is a part of)

Applicants Details

Owner's Name Rachyl Edge and Regan Randell .....
Postal Address PDC 0152, Maungatapere, Whangarei .....
Contact Telephone No +642102607573 .....Email rachyledge@gmail.com .....
Agent Name GJ Gardner Homes .....
Postal Address P O Box 8046, Kensington, Whangarei .....
Contact Telephone No 09 437 5666 .....Email Whangarei@gjgardner.co.nz .....

Send permit to: ☐ Owner ☑ Agent

Site Location

Street/Rapid No Lot 8 ..... Road Name Sampsons Way .....
Town or Locality Dargaville .....
Legal Description 542244 ..... Valuation No .....

Contractor/Traffic Management Plan Details

Please Note: ***Application will not be accepted by Council if a Plan is not attached for the location of your vehicle access.***

Name of person/firm constructing the crossing Complete Concrete .....
Person in Charge of Traffic Management (STMS) .....
Postal Address PO Box 199, Ruakaka, Whangarei .....
Contact Telephone No +64223534002 .....Email completeconcretelimited@gmail.com .....

Crossing Information Required

Location:

Adjacent Road is: .....

☑ Urban (S05) ☐ Rural (S06)

☑ Sealed with kerb & channel ☐ Sealed with no kerb & channel ☐ Metalled (only applicable to unsealed roads)

Intended Use

☑ Residential ☐ Commercial ☐ Other *(please specify)*.....

KAIPARA DISTRICT
Kaipara te Oranganui • Two Oceans Two Harbours

Vehicle Crossing Permit Application

KAIPARA DISTRICT COUNCIL

SITE LOCALITY PLAN

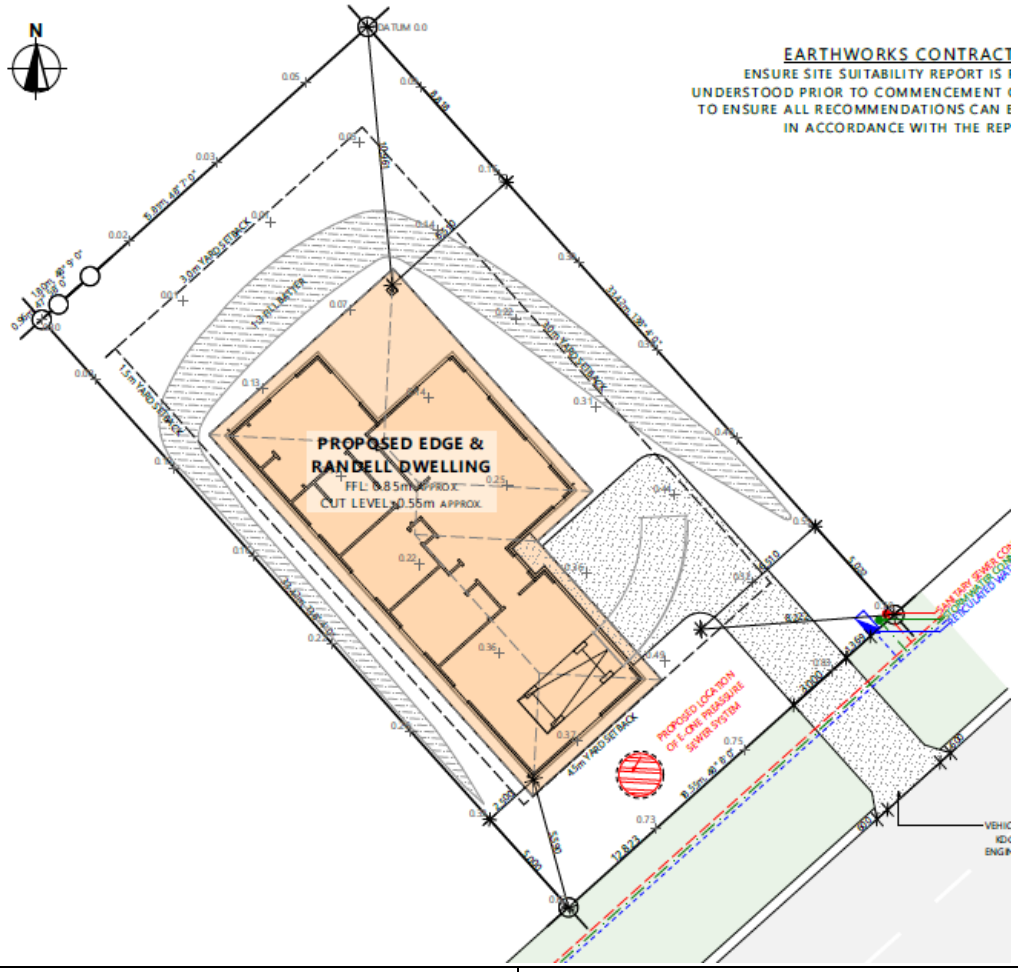

Map Showing Location of Vehicle Crossing	**Please show the following:** • Roads • Property boundaries • Location of entranceway – including **distances** from boundaries and adjacent numbered property entrances • Other identifiable land marks, buildings etc.
Property Description:	
Road Name: **Sampsons Way**	

The Application Fee must be paid before the permit can be processed.
If the applicant has a current resource consent of which the Vehicle Crossing is a part of, the fee to be charged is $125.00, the inspections will be billed separately. For all other applications the fee is $485.00 which includes the pre and post approval inspections.
Please complete the form and send it to council@kaipara.govt.nz

Signed by Owner/Agent: …… Date: ..... ……

Office Use Only

Receipt No: ..... Date: .....

Hawthorn Geddes
engineers & architects ltd

In reply please quote: 11546

27 August 2018

Sampson Family Trust
todd@hummingbirdconstruction.co.nz
Attention: Todd Sampson

cc Mark Benjamin
markb@mhg.co.nz

GEOTECHNICAL INVESTIGATION REPORT
FOR PROPOSED SUBDIVISION OF LOT 1 DP 111509
PHOENIX PLACE, DARGAVILLE

Purpose

The purpose of this report is to provide a summary of the geotechnical investigation completed at the above property for a proposed subdivision. Advice is given on stability and soil conditions for foundation design.

This report is suitable for supporting a subdivision consent application.

Proposal

It is proposed to subdivide the above property into 23 Lots, all similar in size between 600m² and 758m².

Access is directly off Phoenix Place with a vested road running from the north-east to the south-west along the centre of the property as shown on the plan attached.

There is Kaipara District Council wastewater and water connection to all Lots.

Site Description

The site is on flat ground, almost rectangular in shape and 1.89 ha in size.

The property has reeds on the surface consistent with surface water ponding.

There are open drains up to 600mm wide and up to 900mm deep within part of the southeast boundary and along the eastern boundary of the site. There is a stormwater drainage pond to the south-west of the site.

Geological Setting

The online Geology Web Map of the Institute of Geological & Nuclear Sciences describes the area as indicates the site geology is *Early Pleistocene - Middle Pleistocene undifferentiated estuary, river and swamp deposits consisting of "Partly consolidated mud, sand, gravel and peat or lignite of alluvial, colluvial, lacustrine, swamp and estuarine origins".*

The soil encountered in our investigation was consistent with the description above.

Visible Stability

The site house sites are on essentially level ground. No instability was observed.

Soil Investigation

The soil investigation consisted of ten hand augered boreholes drilled to depths of 0.9m and 2.4m. Shear vane testing was undertaken at nominal 0.5m intervals as the holes were drilled and Scala penetrometer testing at the base of all boreholes. Hand auger locations are shown on the attached site plan.

The soils encountered in all boreholes were similar except in HA10, where we encountered peat below the topsoil layer to 0.5m depth. The remaining hand augers encountered topsoil up to 300mm thick overlying hard pan sand-silt layer typically less than 300mm thick. Below this is highly plastic clay to the end of the boreholes between 0.9m and 2.4m.

Whilst performing our hand augers we encountered water perched above the impermeable hard pan layer. Groundwater was encountered below the hard pan at between 0.5m and 0.8m below ground level.

The soil was squeezing at around 0.9m as the boreholes were advanced to 1.5m closing the hole at 0.9m. Scala penetrometer results at the base of the hand augers between 0-1 blow per 100mm are associated with the holes squeezing closed.

Scala penetrometer results were typically 2 blows to 3 blows per 100mm penetrations, with results increasing with depth.

Shear vane results in the hard pan sandy silt were greater than 96kPa. In the clay below the shear vane results were between 41kPa and 120kpa.

Stability

The site is on essentially flat ground. We did not observe any instability.

Earthworks to construct building platforms will involve little more than stripping topsoil and/or peat.

Therefore in terms of Section 106 of the Resource Management Act, we consider that;

(a) the land in respect of which a consent is sought, or any structure on the land, is not and is not likely to be subject to material damage by erosion, falling debris or slippage, from any source; and

(b) any subsequent use that is likely to be made of the land is not likely to accelerate, worsen, or result in material damage to the land, other land, or structure by erosion, falling debris or slippage from any source; and,

(c) sufficient provision has been made for legal and physical access to each allotment to be created by the subdivision.

Ground Conditions for Foundations

Soils encountered in the boreholes are consistent with good ground as described in NZS 3604. The hard pan silt is not expansive soil. We consider the ground conditions are suitable for shallow foundations sized in accordance with NZS 3604.

For all Lots we recommend removal of all topsoil and organic soils down to the hard pan. The excavation shall be backfilled with compacted clean GAP40 hardfill. To reduce settlement we recommend a maximum of 0.5m of fill on the new Lots. The proposed dwellings on all Lots shall be limited to a single-storey, timber-framed construction.

Rib-raft floor slabs are not suitable due to groundwater encountered at less than 0.6m (the Firth Rib-raft technical document section 3.5 states that a Rib-raft floor shall not be used on damp sites where the expected ground water level could be 0.6m to the underside of the system).

Stormwater

During our investigation, surface water ponding and an impermeable hard pan underlying the topsoil was encountered. We recommend runoff from houses and impervious surfaces is discharged to proposed stormwater reticulation.

Limitation

Recommendations and opinions in this report are based on data from the investigation described herein. The nature and continuity of subsoil conditions away from the boreholes is inferred and it is possible that actual conditions could vary from those assumed. Should subsoil conditions vary from those described in this report, it is essential that Hawthorn Geddes engineers and architects ltd be contacted to confirm the applicability of the recommendations.

This report has been prepared solely for the benefit of our client Todd Sampson and the Kaipara District Council in relation to the subdivision consent application for which this report has been prepared. The comments in it are limited to the purpose stated in this report. No liability is accepted by Hawthorn Geddes engineers & architects ltd in respect of its use by any other person, and any other person who relies upon any matter contained in this report does so entirely at their own risk.

Yours faithfully

Dean Botica
Hawthorn Geddes
engineers & architects ltd

Report prepared by: Tiana Epati

Encl: - Site Plan (1 x A3 page)
- Borehole Logs (10x A4 pages)

Hawthorn Geddes
engineers & architects ltd

LOG OF HAND AUGER

HA1

PAGE 1 OF 1

CLIENT Todd Sampson
PROJECT Sampson Family Trust - Geo Phoenix Place, Dargaville
PROJECT NUMBER 11546
PROJECT LOCATION Phoenix Place, Dargaville
START DATE 16/08/18 COMPLETED DATE 16/08/18
COORDINATES LEVEL 0.00
DRILLING CONTRACTOR HGEA
DRILLING METHOD 50mm Hand auger
LOGGED BY AM
HOLE LOCATION Lot 1/Lot 2

DEPTH (m)	SCALA (Blows / 100mm)	TESTS	GRAPHIC LOG	MATERIAL DESCRIPTION	WATER	DEPTH (m)
			TS	0.15 Topsoil mixture silt, brown, saturated, low plasticity (wet surface)		
		SV = UTP (GEO287)		Sandy SILT (ML); grey brown. Hard; low plasticity; moist; sand, fine to coarse.		
				0.60 0.5m: trace organics.	16/08/2018	
		SV = 80 / 62 kPa (GEO287)		Silty CLAY (CH); light grey. Stiff; high plasticity; moist.		
1		SV = 61 / 34 kPa (GEO287)		0.9m: soil is squeezing at 0.9m could not advance hand auger		
	2			1.60 EOH: 1.60m		
2	2 3 4 4 4 5 5 6 6 7 7 7 8 9 10					
3						
4						

PHOTO / SKETCH

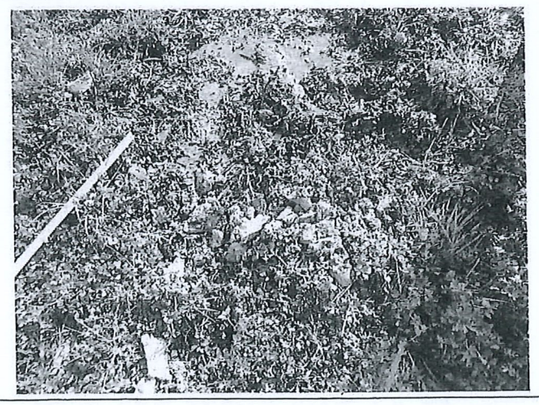

WATER OBSERVATIONS

Date / Time	Water Level (m)	Type	Remarks
16/08/2018 12:00:00 a.m.	0.60	Static Water Level	

REMARKS

SYMBOLS

- Standing Water Level
- Water Out flow
- Water In flow

Produced with Core-GS

Hawthorn Geddes
engineers & architects ltd

LOG OF HAND AUGER

HA2

PAGE 1 OF 1

CLIENT Todd Sampson	**PROJECT** Sampson Family Trust - Geo Phoenix Place, Dargaville
PROJECT NUMBER 11546	**PROJECT LOCATION** Phoenix Place, Dargaville
START DATE 16/08/18 **COMPLETED DATE** 16/08/18	**COORDINATES** **LEVEL** 0.00
DRILLING CONTRACTOR HGEA	
DRILLING METHOD 50mm Hand auge	
LOGGED BY TE	
HOLE LOCATION Lot 23	

DEPTH (m)	SCALA (Blows / 100mm)	TESTS	GRAPHIC LOG	MATERIAL DESCRIPTION	WATER	DEPTH (m)
			TS	Topsoil mixture, brown, wet, low plasticity.		
				0.30		
		SV = UTP (GEO952)		Sandy SILT (ML); light grey brown. Hard; low plasticity; moist; sand, fine to coarse.		
				0.60		
		SV = 120 / 22 kPa (GEO952)		CLAY (CH); light grey white. Stiff; moist.		
				0.7m: trace pockets of organics rootlets brown.		
1		SV = 60 / 38 kPa (GEO952)		0.9m: drilled down to 1.5m and attempted to hand auger but the soil was squeezing in and cannot progress hand auger.	16/08/2018	
		SV = 50 / 22 kPa (GEO952)				
	0			1.50 EOH: 1.50m		
	0	SV = 63 / 35 kPa (GEO952)				
	1					
	2					
	2					
2	3					
	2					
	3					
	3					
	3					
	5					
	4					
	6					
	5					
	6					
3	7					
	6					
	7					
	7					
4						

PHOTO / SKETCH

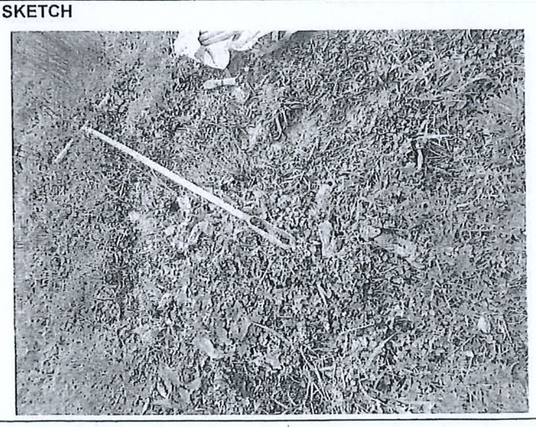

WATER OBSERVATIONS

Date / Time	Water Level (m)	Type	Remarks
16/08/2018 12:00:00 a.m.	0.85	Static Water Level	

REMARKS

SYMBOLS

- Standing Water Level
- Water Out flow
- Water In flow

Produced with Core-GS

Hawthorn Geddes engineers & architects ltd

LOG OF HAND AUGER

HA3

PAGE 1 OF 1

CLIENT	Todd Sampson	PROJECT	Sampson Family Trust - Geo Phoenix Place, Dargaville
PROJECT NUMBER	11546	PROJECT LOCATION	Phoenix Place, Dargaville
START DATE	16/08/18	COMPLETED DATE	16/08/18
COORDINATES		LEVEL	0.00
DRILLING CONTRACTOI	HGEA		
DRILLING METHOI	50mm Hand auge		
LOGGED BY	AM		
HOLE LOCATION	Lot 4		

DEPTH (m)	SCALA (Blows / 100mm)	TESTS	GRAPHIC LOG	MATERIAL DESCRIPTION	WATER	DEPTH (m)
			TS	0.15 Topsoil mixture silt, brown, saturated, low plasticity.		
		SV = 100 / 35 kPa (GEO287)		Sandy SILT (ML), with trace clay; greyish brown. Stiff; high plasticity; moist; sand, fine to coarse.		
		SV = 78 / 38 kPa (GEO287)		0.60 Silty CLAY (CH), with some sand; light grey. Stiff; high plasticity; moist; sand, fine to medium.	16/08/2018	
1	0 1 2 3 4 4 5 6 7 6 8 7 9 8 7 8 9	SV = 65 / 40 kPa (GEO287)		0.90 0.7m EOH: Squeezing at 0.7m could not advance hand auger		
2						
3						
4						

PHOTO / SKETCH

WATER OBSERVATIONS

Date / Time	Water Level (m)	Type	Remarks
16/08/2018 12:00:00 a.m.	0.60	Static Water Level	

REMARKS

SYMBOLS

- Standing Water Level
- Water Out flow
- Water In flow

Produced with Core-GS

Hawthorn Geddes
engineers & architects ltd

LOG OF HAND AUGER

HA4

PAGE 1 OF 1

CLIENT Todd Sampson	**PROJECT** Sampson Family Trust - Geo Phoenix Place, Dargaville
PROJECT NUMBER 11546	**PROJECT LOCATION** Phoenix Place, Dargaville
START DATE 16/08/18 **COMPLETED DATE** 16/08/18	**COORDINATES** **LEVEL** 0.00
DRILLING CONTRACTOR HGEA	
DRILLING METHOD 50mm Hand auge	
LOGGED BY TE	
HOLE LOCATION Lot 20	

DEPTH (m)	SCALA (Blows / 100mm)	TESTS	GRAPHIC LOG	MATERIAL DESCRIPTION	WATER	DEPTH (m)
			TS	Topsoil mixture, brown, wet, low plasticity.		
				0.30		
		SV = UTP (GEO952)		Sandy SILT (ML); light grey brown.		
		SV = 66 / 19 kPa (GEO952)		Hard; low plasticity; moist; sand, fine to coarse.	16/08/2018	
				0.5m: trace organics trace dark brown		
				0.80	16/08/2018	
1		SV = 101 / 25 kPa (GEO952)		CLAY (CH); light grey white. Stiff; high plasticity; moist.		
	1 1 2 3 4 5 6 7 8 9 9 9 9 9 9	SV = 66 / 35 kPa (GEO952)		0.8m: hard to auger in the clay		
				1.10 EOH - 1.10m		
				0.9m: soil is squeezing at 0.9m could not advance hand auger		
2						
3						
4						

PHOTO / SKETCH

WATER OBSERVATIONS

Date / Time	Water Level (m)	Type	Remarks
16/08/2018 12:00:00 a.m.	0.80	Static Water Level	
16/08/2018 12:00:00 a.m.	0.30	Inflow	water seeping in from the surface.

REMARKS

SYMBOLS

- Standing Water Level
- Water Out flow
- Water In flow

Produced with Core-GS

Hawthorn Geddes
engineers & architects ltd

LOG OF HAND AUGER

HA5

PAGE 1 OF 1

CLIENT Todd Sampson	**PROJECT** Sampson Family Trust - Geo Phoenix Place, Dargaville
PROJECT NUMBER 11546	**PROJECT LOCATION** Phoenix Place, Dargaville
START DATE 16/08/18 **COMPLETED DATE** 16/08/18	**COORDINATES** **LEVEL** 0.00
DRILLING CONTRACTOR HGEA	
DRILLING METHOD 50mm Hand auge	
LOGGED BY AM	
HOLE LOCATION Lot 6	

DEPTH (m)	SCALA (Blows / 100mm)	TESTS	GRAPHIC LOG	MATERIAL DESCRIPTION	WATER	DEPTH (m)
			TS	0.15 Topsoil mixture silt, brown, saturated, low plasticity.		
		SV = UTP (GEO287)		Sandy SILT (ML); light grey brown. Hard; low plasticity; moist; sand, fine to coarse.		
				0.70	16/08/2018	
		SV = 86 / 51 kPa (GEO287)		Silty CLAY (CH); light grey. Stiff; high plasticity; moist.		
1		SV = 80 / 51 kPa (GEO287)		0.8m: soil is squeezing at 0.75m could not advance hand auger		
	0 1 1 1 1 2 3 6 5 7 7 8 8 7 7 8			1.1m: soil has squeezed in and closed the hole.		
				1.50 EOH: 1.50m		
2						
3						
4						

PHOTO / SKETCH

WATER OBSERVATIONS

Date / Time	Water Level (m)	Type	Remarks
16/08/2018 12:00:00 a.m.	0.70	Static Water Level	

REMARKS

SYMBOLS

- Standing Water Level
- Water Out flow
- Water In flow

Produced with Core-GS

Hawthorn Geddes
engineers & architects ltd

LOG OF HAND AUGER

HA6

PAGE 1 OF 1

CLIENT Todd Sampson	**PROJECT** Sampson Family Trust - Geo Phoenix Place, Dargaville
PROJECT NUMBER 11546	**PROJECT LOCATION** Phoenix Place, Dargaville
START DATE 16/08/18 **COMPLETED DATE** 16/08/18	**COORDINATES** **LEVEL** 0.00
DRILLING CONTRACTOI HGEA	
DRILLING METHOI 50mm Hand auge	
LOGGED BY TE	
HOLE LOCATION Lot 17	

DEPTH (m)	SCALA (Blows / 100mm)	TESTS	GRAPHIC LOG	MATERIAL DESCRIPTION	WATER	DEPTH (m)
0	0	SV = UTP (GEO952)	TS	0.15 Topsoil mixture with silt, brown, wet, low plasticity. (very wet on the surface).		
	2			Sandy SILT (ML); light grey brown. Hard; low plasticity; moist; sand, fine to coarse.		
	2	SV = 110 / 35 kPa (GEO952)		0.45 Silty CLAY (CH); light grey. Stiff; high plasticity; moist.		
	3			0.5m: trace fine rootlets orange brown		
	3			0.8m: soil is squeezing at 0.75m could not advance hand auger		
1	4	SV = 66 / 31 kPa (GEO952)		1.0m: white grey	16/08/2018	
	4					
	5	SV = 72 / 38 kPa (GEO952)				
	4					
	5	SV = 66 / 31 kPa (GEO952)		1.8m: slight indent when poking the clay with finger		
2	4					
	7					
	8					
	7					
	7					
	8					
	8					
3	9					
	9					
				2.40 EOH: 2.40m		
		SV = 41 / 19 kPa (GEO952)		2.4m: easy to poke finger into clay.		
4						

PHOTO / SKETCH

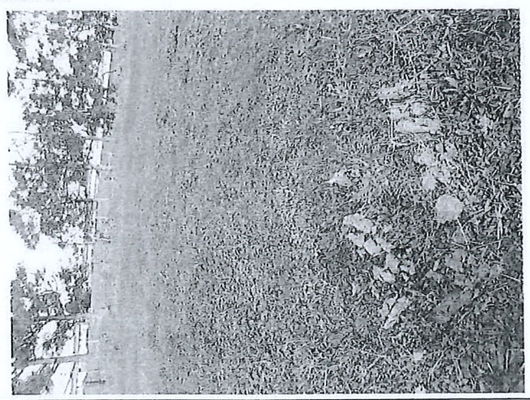

WATER OBSERVATIONS

Date / Time	Water Level (m)	Type	Remarks
16/08/2018 12:00:00 a.m.	0.85	Static Water Level	

REMARKS

SYMBOLS

- Standing Water Level
- Water Out flow
- Water In flow

Produced with Core-GS

Hawthorn Geddes
engineers & architects ltd

LOG OF HAND AUGER

HA7
PAGE 1 OF 1

CLIENT Todd Sampson
PROJECT NUMBER 11546
START DATE 16/08/18 COMPLETED DATE 16/08/18
DRILLING CONTRACTOR HGEA
DRILLING METHOD 50mm Hand auge
LOGGED BY AM
HOLE LOCATION Lot 8

PROJECT Sampson Family Trust - Geo Phoenix Place, Dargaville
PROJECT LOCATION Phoenix Place, Dargaville
COORDINATES LEVEL 0.00

DEPTH (m)	SCALA (Blows / 100mm)	TESTS	GRAPHIC LOG	MATERIAL DESCRIPTION	WATER	DEPTH (m)
			TS	0.15 Topsoil mixture silt, brown, wet, low plasticity. (water ponding on surface).		
		SV = 96 / 32 kPa (GEO287)		Sandy SILT (ML). Stiff; low plasticity; moist; sand, fine to coarse. 0.50		
		SV = 77 / 45 kPa (GEO287)		Silty CLAY (CH); light grey. Stiff; high plasticity; moist.	16/08/2018	
1	1 0 1 1 1 2 5 4 6 5 5 5 6			0.9m: soil is squeezing at 0.9m could not advance hand auger soil has squeezed the hole closed after advancing to 1.5m.		
				1.50 EOH: 1.50m		
2						
3						
4						

PHOTO / SKETCH

WATER OBSERVATIONS

Date / Time	Water Level (m)	Type	Remarks
16/08/2018 12:00:00 a.m.	0.60	Static Water Level	

REMARKS

SYMBOLS
- Standing Water Level
- Water Out flow
- Water In flow

Produced with Core-GS

Hawthorn Geddes
engineers & architects ltd

LOG OF HAND AUGER

HA8
PAGE 1 OF 1

CLIENT Todd Sampson	**PROJECT** Sampson Family Trust - Geo Phoenix Place, Dargaville
PROJECT NUMBER 11546	**PROJECT LOCATION** Phoenix Place, Dargaville
START DATE 16/08/18 **COMPLETED DATE** 16/08/18	**COORDINATES** **LEVEL** 0.00
DRILLING CONTRACTOR HGEA	
DRILLING METHOD 50mm Hand auge	
LOGGED BY TE	
HOLE LOCATION Lot 14/ Lot 15	

DEPTH (m)	SCALA (Blows / 100mm)	TESTS	GRAPHIC LOG	MATERIAL DESCRIPTION	WATER	DEPTH (m)
			TS	Topsoil mixture silt, brown wet, low plasticity. (lots of surface water)		
				0.20		
		SV = UTP (GEO952)		Sandy SILT (ML); light brownish grey. Hard; low plasticity; moist; sand, fine to coarse.		
				0.60	16/08/2018	
		SV = 94 / 63 kPa (GEO952)		Silty CLAY (CH); light white grey. Firm; high plasticity; moist. 0.8m: soil is squeezing at 0.75m could not advance hand auger		
1		SV = 79 / 50 kPa (GEO952)				
	0			1.50 EOH: 1.50m		
	3	SV = 79 / 47 kPa (GEO952)				
	2					
	2					
	3					
2	2					
	3					
	4					
	6					
	6					
	5					
	6					
	6					
3						
4						

PHOTO / SKETCH

WATER OBSERVATIONS

Date / Time	Water Level (m)	Type	Remarks
16/08/2018 12:00:00 a.m.	0.60	Static Water Level	

REMARKS

SYMBOLS

- Standing Water Level
- Water Out flow
- Water In flow

Produced with Core-GS

Hawthorn Geddes engineers & architects ltd

LOG OF HAND AUGER

HA9

PAGE 1 OF 1

CLIENT	Todd Sampson	**PROJECT**	Sampson Family Trust - Geo Phoenix Place, Dargaville
PROJECT NUMBER	11546	**PROJECT LOCATION**	Phoenix Place, Dargaville
START DATE	16/08/18	**COMPLETED DATE**	16/08/18
COORDINATES		**LEVEL**	0.00
DRILLING CONTRACTOR	HGEA		
DRILLING METHOD	50mm Hand auge		
LOGGED BY	AM		
HOLE LOCATION	Lot 10/Lot 11		

DEPTH (m)	SCALA (Blows / 100mm)	TESTS	GRAPHIC LOG	MATERIAL DESCRIPTION	WATER	DEPTH (m)
	1		TS	0.15 Topsoil mixture silt, brown, wet, low plasticity.		
	1	SV = 102 / 37 kPa (GEO287)		Sandy SILT (ML); light grey brown. Stiff; low plasticity; moist; sand, fine to medium.		
	2			0.65 Silty CLAY (CH); light grey white. Stiff; high plasticity; moist.	16/08/2018	
1	3	SV = 72 / 40 kPa (GEO287)		0.9m: white and soil is squeezing at 0.9m could not advance hand auger		
	4			1.20 EOH: 1.20m		
2	5					
	6					
	7					
	8					
	8					
	9					
3						
4						

PHOTO / SKETCH

WATER OBSERVATIONS

Date / Time	Water Level (m)	Type	Remarks
16/08/2018 12:00:00 a.m.	0.80	Static Water Level	

REMARKS

SYMBOLS

- Standing Water Level
- Water Out flow
- Water In flow

Produced with Core-GS

Hawthorn Geddes engineers & architects ltd

LOG OF HAND AUGER

HA10

PAGE 1 OF 1

CLIENT Todd Sampson	**PROJECT** Sampson Family Trust - Geo Phoenix Place, Dargaville
PROJECT NUMBER 11546	**PROJECT LOCATION** Phoenix Place, Dargaville
START DATE 16/08/18 **COMPLETED DATE** 16/08/18	**COORDINATES** _____ **LEVEL** 0.00
DRILLING CONTRACTOR HGEA	
DRILLING METHOD 50mm Hand auge	
LOGGED BY TE	
HOLE LOCATION Lot 12/ Lot 13	

DEPTH (m)	SCALA (Blows / 100mm)	TESTS	GRAPHIC LOG	MATERIAL DESCRIPTION	WATER	DEPTH (m)
0			TS	Topsoil mixture silt brown, wet, low plasticity.		
			0.20			
		SV = UTP (GEO952)		Sandy SILT (ML), with some peat (spongy); light brown grey. Stiff; low plasticity; moist; sand, fine to coarse.	16/08/2018	
			0.50			
		SV = 83 / 29 kPa (GEO287)		Silty CLAY (CH); light grey white. Stiff; high plasticity; moist.	16/08/2018	
				0.5m: hard to auger at change of material.		
1	1			0.9m: soil is squeezing at 0.9m could not advance hand auger		
	2	SV = 83 / 51 kPa (GEO287)				
	3		1.10	EOH: 1.10m		
	3					
	5					
	6					
	8					
	9					
2	10					
	11					
	12					
3						
4						

PHOTO / SKETCH

WATER OBSERVATIONS

Date / Time	Water Level (m)	Type	Remarks
16/08/2018 12:00:00 a.m.	0.20	Inflow	
16/08/2018 12:00:00 a.m.	0.50	Static Water Level	

REMARKS

SYMBOLS

- Standing Water Level
- Water Out flow
- Water In flow

Produced with Core-GS

NOTE:
SITE INFORMATION ADAPTED FROM SURVEY DRAWING PROVIDED BY PARALLAX REFERENCE 16091-05;
AERIAL PHOTO PROVIDED BY LINZ AND MAY SHOW DISTORTION;
ALL INFORMATION MUST BE CONFIRMED ON SITE;
TO BE READ IN CONJUNCTION WITH HAWTHORN GEDDES ENGINEERS & ARCHITECTS LTD REPORT REFERENCE 11546

Key

HA Hand augered borehole locations

N

Lot 13 DP 387534
DP 387534
Lot 27 DP 387534
Lot 26 DP 387534
Lot 30 DP 387534
Lot 25 DP 387534
Lot11 773m² 689m² Net
HA9
Lot 31 DP 387534
Lot 4 DP 84313
Lot 10 665m²
Lot 2 DP 415663
Lot 23 DP 387534
Lot 9 620m²
Lot 12 832m² 758m² Net
HA7
Lot 8 620m²
HA10
Lot 21 DP 387534
Lot 7 620m²
Lot13 626m²
Lot 14 618m²
Pt Lot 4 DP 15415
Lot 20 DP 387534
HA5
HA8
Lot 6 600m²
Lot 15 618m²
Lot 19 DP 387534
Lot 36 DP 387534
Lot 5 600m²
Lot 16 618m²
Lot 4 600m²
Lot 17 618m²
HA3
HA6
Lot 3 600m²
Lot 18 618m²
Lot 2 716m² 620m² Net
Lot 19 618m²
HA1
Lot 20 618m²
HA4
Lot 1 997m² 602m² Net
Lot 21 618m²
Lot 22 618m²
Lot 23 688m² 606m² Net
HA2
Lot 7 DP 15415

USE WRITTEN DIMENSIONS. DO NOT SCALE FROM DRAWING.

© HAWTHORN GEDDES ENGINEERS & ARCHITECTS LTD (HGE&A)
THE COPYRIGHT OF THIS DRAWING IS THE PROPERTY OF HGE&A.
REPRODUCTION OF THIS DESIGN OR DRAWING IS NOT PERMITTED UNLESS PERMISSION IS OBTAINED FROM HGE&A.

SITE PLAN
SCALE - 1:1000

Hawthorn Geddes
engineers & architects ltd
7 Selwyn Avenue
Whangarei 0110
Phone: 09 438 7139
hg@hgcs.co.nz
Unit 21a, The Grange
Warkworth 0910
Phone: 09 283 3428
www.hawthorngeddes.co.nz

CLIENT SAMPSON FAMILY TRUST
PROJECT GEOTECHNICAL ASSESSMENT
PHOENIX PLACE, DARGAVILLE
DRAWING SITE PLAN

PROJECT No. 11546
SHEET Figure 1

22/08/2018 11:33:40 a.m. K:\11546 Sampson Family Trust Geotech Assessment Phoenix Place Dargaville\11546 180817 site plan.dwg

Buildable Truss Layout

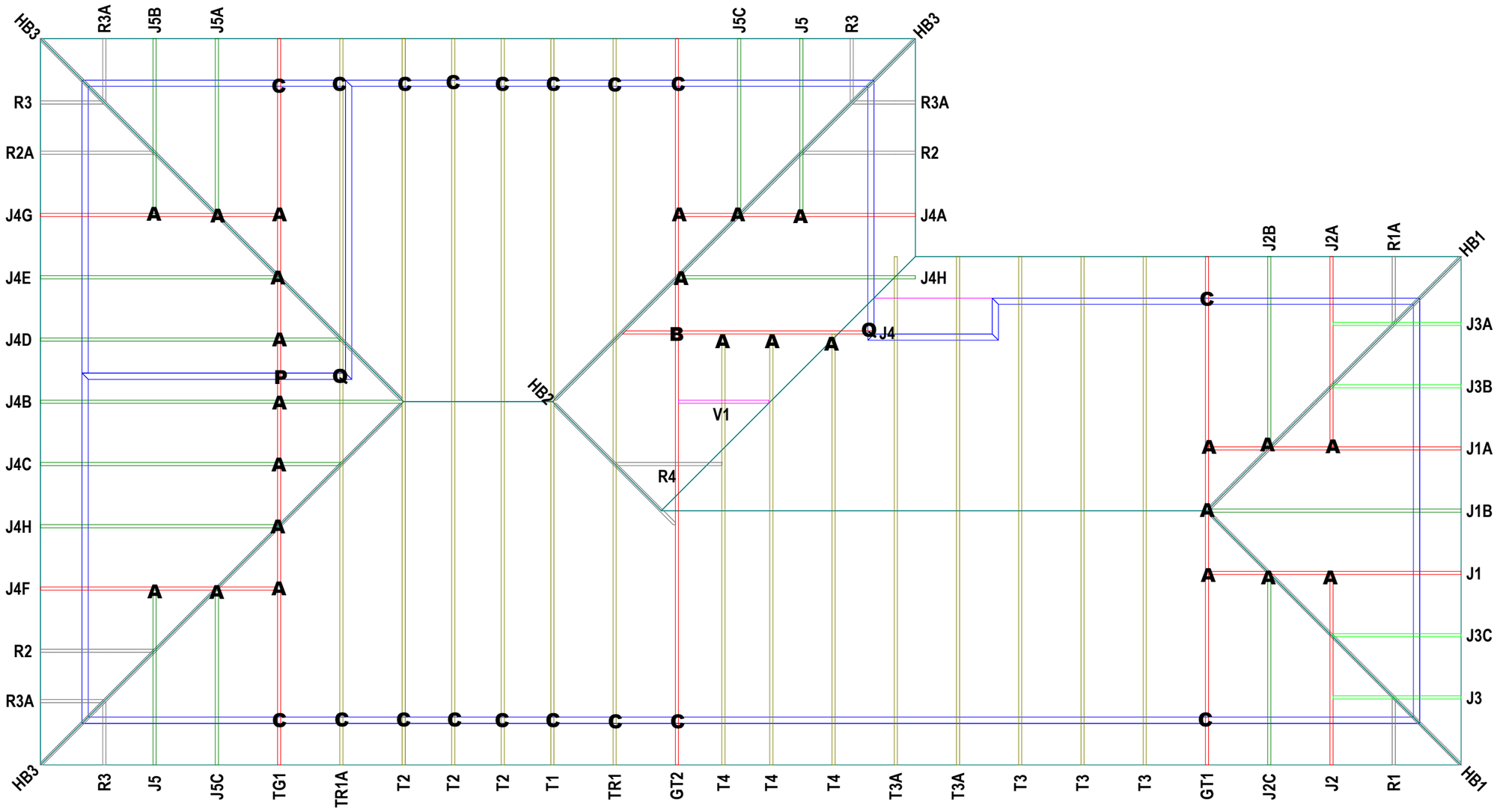

W=Wire dogs for top chord to top chord connections

CARTERS

32 Commerce St
Whangarei
Ph (09) 430 7716
Fax (09) 430 7720

JOB No 334171C1

Client:	GJ Gardner (Sudfelt Const)
Job Name:	Edge
Address:	Lot 8 Sampsons Way
Pitch:	25.0deg
Roof Material:	Metal Tiles
Soffit Overhang:	600
Wind Area:	High
Ceiling:	Gib 13mm/Rondo Screwed
B/chord restraints:	600
Drawn by:	Administrator
Date :	30 Dec,2020

Trusses And Rafters At 900 Centres Unless Stated Otherwise.
This layout is to be read in conjunction with the Architectural plans.

FIXINGS

Truss Fixing read inconjuction with truss hardware site pack supplied with trusses for fixing

A=47x90 JH
B=47x120 JH
C=CT200
D=47x190 JH
E=95x165 JH
S=Strut brace
G=SH-140 Split Hanger
H=SH-180 Split Hanger
K=SH-220 Split Hanger
L=6kn Strap
M=Multigrip
N=Nail On Plate
J=CPC 80
T=CPC 40 Short {Pair}
Q=9kn Pack
P=16kn
X=24kn uplift

All other truss fixings not indicated as above must have two wire dogs

NOTE

Please contact your local CARTERS Manufacturing Branch for any queries regarding this layout or if any on site remedial work is required.

No modifications to Roof Trusses or Wall Frames are to be undertaken without first obtaining written authority from CARTERS Manufacturing.

See Page 2 for Dimensions, Lintel Statement

Buildable Truss Layout

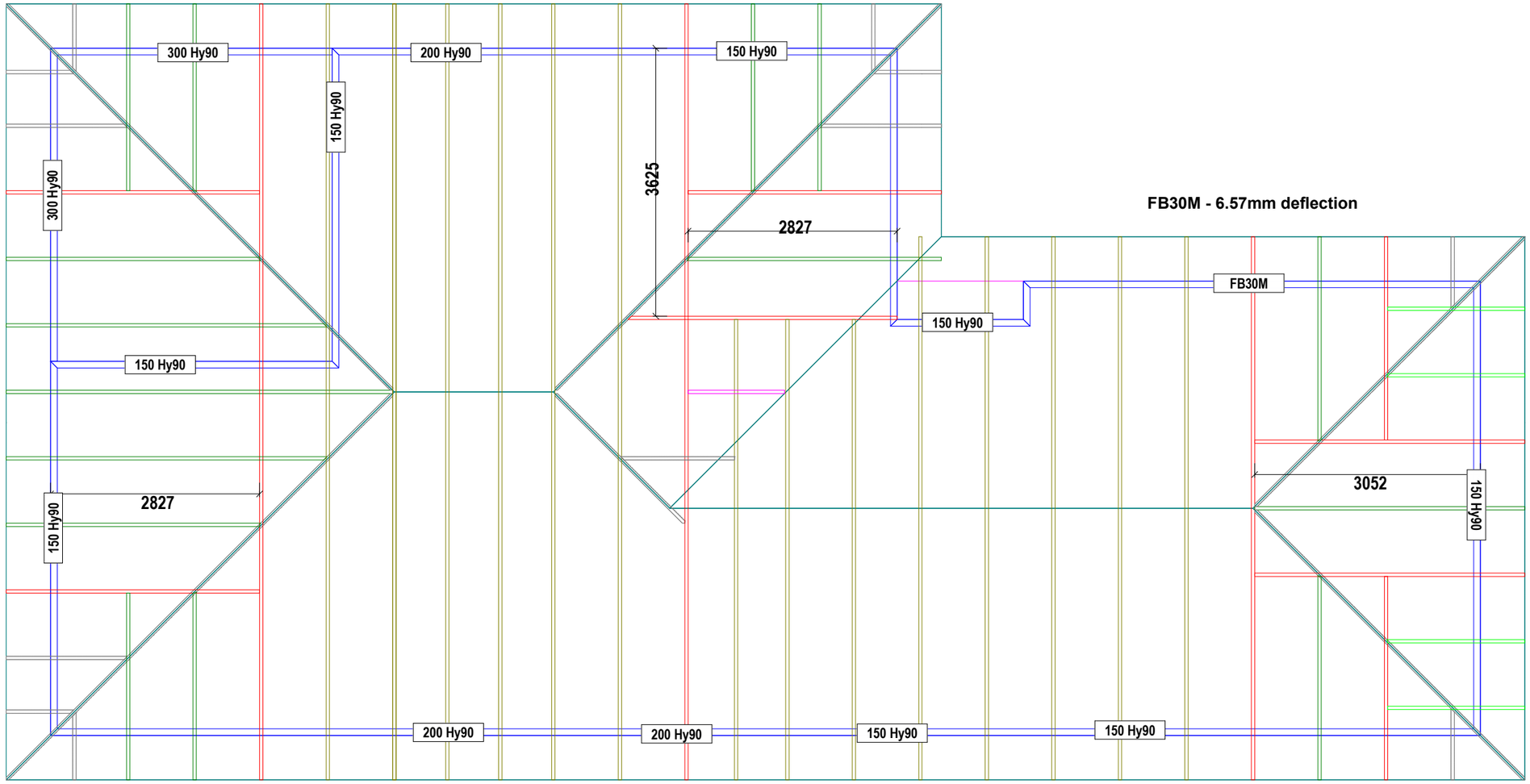

NOTIFICATION OF POINT LOADS TO INTERNAL WALLS
IN EXCESS OF 10kN
Ref.Mitek structural fixings on-site guide for building code compliance
2012 edition {Revised for NZS 3604:2011}

_kn down
_kn uplift
_no of studs under truss

Internal Loadbearing wall

CARTERS

32 Commerce St
Whangarei
Ph (09) 430 7716
Fax (09) 430 7720

JOB No 334171C1

Client: GJ Gardner (Sudfelt Const)
Job Name: Edge
Address: Lot 8 Sampsons Way

Pitch:	25.0deg
Roof Material:	Metal Tiles
Soffit Overhang:	600
Wind Area:	High
Ceiling:	Gib 13mm/Rondo Screwed
B/chord restraints:	600
Drawn by:	Administrator
Date :	30 Dec,2020

Trusses And Rafters At 900 Centres Unless Stated Otherwise.
This layout is to be read in conjunction with the Architectural plans.

"Note"
if metal ceiling battens on clips are use,bottom chord restraints required @ 1800crs

PAGE 2 of 2

These lintels have been sized as per the GANGLAM 04/2008 and FLITCH BEAM V1.10 June 2011 selection manuals as provided by MiTek NZ Ltd.

HYSPAN and HY90 lintels have been sized using designIT v 6.3.5 NZ software or selection manuals, HYSPAN Edition 3 and HY90 E08/2006 as provided by CHH futurebuild.

Unless otherwise stated all lintels are to be selected as per NZS3604 2011.

All walls shown on this layout are considered to be load bearing.

See Page 1 for Truss Layout and Fixings

MiTek New Zealand Limited

Correspondence from : **AUCKLAND**
40 Neales Road, East Tamaki 2013
PO Box 58-014, Botany 2163
Phone: 09 274 7109
Fax: 09 274 7100

CHRISTCHURCH
14 Pilkington Way, Wigram 8042
PO Box 8387, Riccarton 8440
Phone: 03 348 8691
Fax: 03 348 0314

www.miteknz.co.nz

PRODUCER STATEMENT for MiTek 20/20® TRUSS DESIGN - Version 4.7

ISSUED BY: **MiTek New Zealand Limited**

TO: **CARTERS**

IN RESPECT OF: **MiTek® Truss Designs**

This producer statement covers the MiTek 20/20® truss design and the structural performance of the GANG-NAIL® connector plate for the job reference **334171C1** and may be used by a Building Consent Authority to assist in determining compliance with the New Zealand Building Code.

The MiTek 20/20® truss design program has been developed by MiTek New Zealand Limited for the design of MiTek® timber roof, floor and attic trusses in New Zealand. The truss designs computed by MiTek 20/20 ® are prepared using sound and widely accepted engineering principles, and in accordance with compliance documents of the New Zealand Building Code and Verification Method B1/VM1; and internationally accepted standard ANSI/TPI 1 - 2002 as an alternative solution, to satisfy the requirements of Clause B1 of the New Zealand Building Code.

On behalf of MiTek New Zealand Limited, and subject to:

i) All proprietary products meeting their performance specification requirements
ii) The provision of adequate roof bracing and overall building stability
iii) Correct selection and placement of GANG-NAIL connector plates
iv) Correct input of Truss Design Data as shown in the Fabricator Design Statement for this job
v) The design being undertaken by the accredited fabricator under the terms of the software licence
vi) Timber is graded to the requirements of NZS 3603:1993
vii) Minimum timber treatment for these MiTek® trusses shall be in accordance with B2/AS1 Table 1A and the relevant sections of NZS 3602:2003

I believe on reasonable grounds that the trusses, if constructed in accordance with the MiTek 20/20® truss design and shop drawings, will comply with the relevant provisions of the New Zealand Building Code.

MiTek New Zealand Limited holds a current policy of Professional Indemnity Insurance no less than $500,000.

On behalf of MiTek New Zealand Limited, **Date: Wednesday, December 30, 2020**

In Ling Ng, BE (Hons), CPEng, IntPE, MIPENZ (ID: 146585)
TECHNICAL SERVICES MANAGER, MiTek New Zealand Limited

Job: 334171C1
Client: GJ Gardner (Sudfelt Const)
Phone:
Site: Edge
Lot 8 Sampsons Way
Dargaville
Description:
Building Consent No.:
Phone:

MITEK FABRICATOR DESIGN STATEMENT

This statement is issued by MiTek accredited fabricator **CARTERS**, being licensed to use the MiTek 20/20® software, to the client listed above and may be used by the Building Consent Authority to assist in determining compliance with the New Zealand Building Code.

MiTek 20/20® TRUSS DESIGN DATA

The MiTek 20/20® computer design for this job is based on the following design parameters entered into the program. The Fabricator shall ensure that these job details are current and relevant to the project for the design of the MiTek ® trusses.

Job Details

Importance Level : 2

Design Working Life : 50 years

Roof Truss

Timber Group:	MSG8 DDP H1.2	Pitch:	25.000 deg	Nominal Overhang:	600 mm
Roof		**Ceiling**		**Wind**	
Material:	Metal Tiles	Material:	Gib 13mm/Rondo Screwed	Area:	High (44.0 m/s)
Dead Load:	0.210 kPa	Dead Load:	0.200 kPa	Pressure Coeff:	Cpe = varies; Cpi = -0.30, 0.20
Restraints:	400 mm centres	Restraints:	600 mm centres		
Live Load:	Qur = 0.250 kPa Qc = 1.100 kN	Live Load:	Qc = 1.400 kN		

The minimum timber treatment for these MiTek® trusses shall be in accordance with B2/AS1 Table 1A and the relevant sections of NZS 3602:2003. The timber for these MiTek® trusses shall be graded to the requirements of NZS 3603:1993. Proprietary fixings and timber connectors shall be selected in accordance with NZS3604:2011 Section 4 - Durability.

MiTek® Truss List

Legend: * = detail only, ? = input only, ~~Txx~~ = failed design, Ø = non certified, Unmarked trusses = designed successfully, LB = lateral bracing required
GB = gable brace required

Truss	Qty	Span (mm)	Pitch (deg)	Spacing (mm)	Truss	Qty	Span (mm)	Pitch (deg)	Spacing (mm)	Truss	Qty	Span (mm)	Pitch (deg)	Spacing (mm)
GT1	1	6150	25.000	900	J2	1	2152	25.000	900	J5B	1	1927	25.000	900
GT2	1	9300	25.000	900	J2A	1	2152	25.000	900	J5C	2	1927	25.000	900
J4	1	2827	25.000	900	J2B	1	2152	25.000	900	T3	3	6150	25.000	900
J4B	1	2827	25.000	900	J2C	1	2152	25.000	900	T3A	2	6150	25.000	900
J4C	1	2827	25.000	900	J3	1	1252	25.000	900	V1	1	1305	25.000	900
J4D	1	2827	25.000	900	J3A	1	1252	25.000	900	*HB1	2	5165	18.249	900
T1	1	9300	25.000	900	J3B	1	1252	25.000	900	*HB2	1	2483	18.249	900
T2	3	9300	25.000	717	J3C	1	1252	25.000	900	*HB3	3	7393	18.249	900
T4	3	5630	25.000	900	J4A	1	2827	25.000	900	*R1	1	965	25.000	900
TG1	1	9300	25.000	900	J4E	1	2827	25.000	900	*R1A	1	965	25.000	900
TR1	1	9300	25.000	900	J4F	1	2827	25.000	900	*R2	2	1640	25.000	900
TR1A	1	9300	25.000	900	J4G	1	2827	25.000	900	*R2A	1	1640	25.000	900
J1	1	3052	25.000	900	J4H	2	2827	25.000	900	*R3	3	913	25.000	900
J1A	1	3052	25.000	900	J5	2	1927	25.000	900	*R3A	3	913	25.000	900
J1B	1	3052	25.000	900	J5A	1	1927	25.000	900	*R4	1	1541	25.000	900

Total quantity : 63

The computer design input has been carried out by:

MiTek 20/20 Software Operator: Administrator

MiTek Candidate Number and Qualifications:

Accredited Fabricator:

CARTERS
Your Building Partner

Wednesday, December 30, 2020

Job: 334171C1 Client: GJ Gardner (Sudfelt Const) Site: Edge
Phone: Lot 8 Sampsons Way
Dargaville
Description:
Building Consent No.: Phone:

TRUSS FIXING SELECTION REPORT - Characteristic Loads

Fixings are selected from the LUMBERLOK Brochure 08/2014 (Timber Connectors Characteristic Loadings Data)

MiTek® Truss List

Legend: * = detail only, ? = input only, ~~Txx~~ = failed design, Ø = non certified, Unmarked trusses = designed successfully

Truss	Qty	Span (mm)	Joint	Down (kN)	Uplift (kN)	Bearing	Fixing Qty	Fixing Selected
GT1	1	6150	B	6.307	6.160	Cross	1	CT200 pair
			F	6.307	6.160	Cross	1	CT200 pair
GT2	1	9300	B	8.167	7.388	Cross	1	CT200 pair
			I	10.645	10.015	Cross	1	CT200 pair
J4	1	2827	A	5.334	4.485	Cross	1	CT200 pair
			C	6.003	5.488	Butt	1	Pair of MultiGrips
J4B	1	2827	B	2.586	0.573	Cross	1	Pair of Wire Dog Staples
			F	0.245	0.392	Butt	1	Pair of 3.15d Nails
			D	1.815	2.378	Cross	1	Pair of Wire Dog Staples
			E	0.733	1.231	Cross	1	Pair of Wire Dog Staples
J4C	1	2827	B	2.601	0.849	Cross	1	Pair of Wire Dog Staples
			E	0.269	0.367	Butt	1	Pair of 3.15d Nails
			D	2.110	2.484	Cross	1	Pair of Wire Dog Staples
J4D	1	2827	B	2.601	0.849	Cross	1	Pair of Wire Dog Staples
			E	0.269	0.367	Butt	1	Pair of 3.15d Nails
			D	2.110	2.484	Cross	1	Pair of Wire Dog Staples
T1	1	9300	B	5.433	4.707	Cross	1	CT200 pair
			F	5.433	4.707	Cross	1	CT200 pair
T2	3	9300	B	4.327	3.748	Cross	3	CT200 pair
			F	4.327	3.748	Cross	3	CT200 pair
T4	3	5630	B	3.447	2.870	Cross	3	Pair of Wire Dog Staples
			J	3.057	2.817	Butt	3	JH 47x90
TG1	1	9300	B	5.060	4.966	Cross	1	CT200 pair
			G	4.205	4.043	Cross	1	CT200 pair
			P	10.746	11.605	Cross	1	16kN Truss to Top Plate
TR1	1	9300	B	5.430	4.708	Cross	1	CT200 pair
			G	5.432	4.708	Cross	1	CT200 pair
TR1A	1	9300	B	4.646	4.150	Cross	1	CT200 pair
			G	4.513	4.053	Cross	1	CT200 pair
			K	1.702	1.213	Cross	1	Pair of Wire Dog Staples
J1	1	3052	B	3.000	2.190	Cross	1	Pair of Wire Dog Staples
			F	2.126	2.319	Butt	1	JH 47x90
J1A	1	3052	B	3.000	2.190	Cross	1	Pair of Wire Dog Staples
			F	2.126	2.319	Butt	1	JH 47x90
J1B	1	3052	B	2.681	1.201	Cross	1	Pair of Wire Dog Staples
			D	1.793	1.907	Butt	1	JH 47x90
J2	1	2152	B	2.551	1.337	Cross	1	Pair of Wire Dog Staples
			F	1.264	0.950	Butt	1	JH 47x90
J2A	1	2152	B	2.551	1.337	Cross	1	Pair of Wire Dog Staples
			F	1.264	0.950	Butt	1	JH 47x90
J2B	1	2152	B	2.486	0.870	Cross	1	Pair of Wire Dog Staples
			F	1.498	0.884	Butt	1	JH 47x90
			D	0.311	0.454	Butt	1	Pair of 3.15d Nails
J2C	1	2152	B	2.486	0.870	Cross	1	Pair of Wire Dog Staples
			F	1.498	0.884	Butt	1	JH 47x90
			D	0.311	0.454	Butt	1	Pair of 3.15d Nails
J3	1	1252	B	2.384	0.636	Cross	1	Pair of Wire Dog Staples
			D	0.569	0.224	Butt	1	Pair of 3.15d Nails
J3A	1	1252	B	2.384	0.636	Cross	1	Pair of Wire Dog Staples
			D	0.569	0.224	Butt	1	Pair of 3.15d Nails
J3B	1	1252	B	2.389	0.534	Cross	1	Pair of Wire Dog Staples
			D	0.365	0.036	Butt	1	Pair of 3.15d Nails
			C	0.397	0.706	Butt	1	Pair of 3.15d Nails
J3C	1	1252	B	2.389	0.534	Cross	1	Pair of Wire Dog Staples
			D	0.365	0.036	Butt	1	Pair of 3.15d Nails
			C	0.397	0.706	Butt	1	Pair of 3.15d Nails
J4A	1	2827	B	2.883	1.941	Cross	1	Pair of Wire Dog Staples
			F	1.788	1.909	Butt	1	JH 47x90
J4E	1	2827	B	2.628	1.118	Cross	1	Pair of Wire Dog Staples
			F	1.694	1.192	Butt	1	JH 47x90
			D	0.377	0.573	Butt	1	Pair of 3.15d Nails
J4F	1	2827	B	2.883	1.941	Cross	1	Pair of Wire Dog Staples
			F	1.788	1.909	Butt	1	JH 47x90
J4G	1	2827	B	2.883	1.941	Cross	1	Pair of Wire Dog Staples
			F	1.788	1.909	Butt	1	JH 47x90
J4H	2	2827	B	2.628	1.118	Cross	2	Pair of Wire Dog Staples
			F	1.694	1.192	Butt	2	JH 47x90
			D	0.377	0.573	Butt	2	Pair of 3.15d Nails
J5	2	1927	B	2.446	0.899	Cross	2	Pair of Wire Dog Staples
			E	1.037	0.660	Butt	2	JH 47x90
J5A	1	1927	B	2.447	0.788	Cross	1	Pair of Wire Dog Staples
			E	1.255	0.671	Butt	1	JH 47x90
			D	0.345	0.524	Butt	1	Pair of 3.15d Nails

Job: 334171C1
Client: GJ Gardner (Sudfelt Const)
Phone:
Site: Edge
Lot 8 Sampsons Way
Dargaville
Description:
Building Consent No.:
Phone:

Truss	Qty	Span (mm)	Joint	Down (kN)	Uplift (kN)	Bearing	---------- Fixing ---------- Qty	Selected
J5B	1	1927	B	2.446	0.899	Cross	1	Pair of Wire Dog Staples
			E	1.037	0.660	Butt	1	JH 47x90
J5C	2	1927	B	2.447	0.788	Cross	2	Pair of Wire Dog Staples
			E	1.255	0.671	Butt	2	JH 47x90
			D	0.345	0.524	Butt	2	Pair of 3.15d Nails
T3	3	6150	B	3.712	3.131	Cross	3	Pair of Wire Dog Staples
			F	3.712	3.131	Cross	3	Pair of Wire Dog Staples
T3A	2	6150	B	3.360	2.863	Cross	2	Pair of Wire Dog Staples
			K	4.070	2.806	Cross	2	Pair of Wire Dog Staples
V1	1	1305	A			Wide		No fixing selected
*HB1	2	5165						Refer NZS3604:2011 Tables 10.1 & 10.14
*HB2	1	2483						Refer NZS3604:2011 Tables 10.1 & 10.14
*HB3	3	7393						Refer NZS3604:2011 Tables 10.1 & 10.14
*R1	1	965						Refer NZS3604:2011 Tables 10.1 & 10.14
*R1A	1	965						Refer NZS3604:2011 Tables 10.1 & 10.14
*R2	2	1640						Refer NZS3604:2011 Tables 10.1 & 10.14
*R2A	1	1640						Refer NZS3604:2011 Tables 10.1 & 10.14
*R3	3	913						Refer NZS3604:2011 Tables 10.1 & 10.14
*R3A	3	913						Refer NZS3604:2011 Tables 10.1 & 10.14
*R4	1	1541						Refer NZS3604:2011 Tables 10.1 & 10.14

Fixing List

Qty	Selected Fixing	Cost
19	CT200 pair	29.64
1	Pair of MultiGrips	1.60
44	Pair of Wire Dog Staples	22.44
17	Pair of 3.15d Nails	0.68
22	JH 47x90	33.66
1	16kN Truss to Top Plate	7.18
1	No fixing selected	

Total		95.20

Note:
1) Fixings have been selected based on loading only. Please check that selected fixings are practical for each situation and that appropriate nailing can be applied on site.
2) Fixings are selected from the LUMBERLOK Brochure 08/2014 (Timber Connectors Characteristic Loadings Data) with down and uplift characteristic loads of at least the values shown for each joint.

Application for Connection to Services

KAIPARA DISTRICT
Kaipara te Oranganui Two Oceans Two Harbours

CONNECTION/DISCONNECTION TO WATER/WASTEWATER/STORMWATER/WATER METER

Property Details

Owner's Name:	Rachyl Edge and Regan Randell
Property Address:	Lot 8, TBA Sampsons Way, Dargaville
Mailing Address: *(If different from above)*	C/- PDC 0152, Maungatapere, Whangarei
Valuation Number:	
Email Address:	rachyledge@gmail.com
Telephone number:	021 026 07573
Mobile number:	

Type of property: **Residential/Urban** ✓ **Rural** ☐ **Commercial** ☐

Number of connections required: **Water** ☐ **Wastewater** ☐ **Stormwater** ☐

Water Meter Only ✓

Disconnection required: ☐

Please provide a detailed plan of work proposed. This must be produced in conjunction with Council's Engineering Code of Practice. ☐ Attached

Additional Connection Details:

Signature of Applicant ..... **Date** 31 March 2021

Water – Fees Apply for 1 July 2020 to 30 June 2021

Description	Fee (Incl. GST) $
EXISTING CONNECTION POINT	
Provide 20 millimetres meter	275.00
Provide 25 millimetres meter	520.00
NEW CONNECTION	
Provide 20 millimetres connection, testable backflow preventer and meter	1,650.00
Provide 25 millimetres connection, testable backflow preventer and meter	2,040.00
Provide 20 millimetres connection, non-testable backflow preventer and meter	1,400.00
Provide 25 millimetres connection, non-testable backflow preventer and meter	1,820.00

Notes

1 The Council's contractor will provide all necessary components to complete the connection from the main to the property boundary. If the distance from the main to the boundary exceeds 2.0 metres, Council reserves the right to recover actual costs.

2 The Council's contractor will provide the meter and install onto an existing connection at the boundary.

3 The Council's contractor will make the physical connection to the Council main and terminate at the property boundary with a water meter. The applicant will carry out all other physical works.

4 This section applies where applicable to all connections.

4a Where a larger meter is required a quote will be obtained from Council's contractor. This quoted cost plus 15% shall be paid to Council prior to work commencing.

4b Where a connection is not straightforward (e.g. crossing a road or lifting cobblestones) a quote will be obtained from Council's contractor. The quoted cost plus 15% shall be paid to Council prior to work commencing.

4c Where land is being subdivided, it is the subdivider's responsibility to provide a water connection **and water meter** to each lot and connect the development's water supply reticulation system to the public system. In all cases connection to the Council main shall be done by Council's contractor and payment shall be made directly by the subdivider to Council's contractor.

Other Connection/Disconnection Fees

Description	Fee (Incl. GST) $
Annual inspection fee for backflow preventer	85.00
Water reconnection fee or removal of water flow restrictor	290.00
Water disconnection fee	290.00

Stormwater Disposal

Description	Fee (Incl. GST) $
Inspection fees	360.00
Connection fee	As per approved contractor's quote + 15%

Connections to public infrastructure can be undertaken by Council Contractors if requested. This incurs the connection fee.

The connection fee is costed for a standard residential connection. It includes a "y" junction and piping to the boundary.

Connections must be made by a certified drain layer. The connection should be inspected by the Building Consent officer.

Connections must be as per Council's Engineering Standards.

Wastewater Disposal

Description	Fee (Incl. GST) $
Inspection fees	360.00
Connection fee – *Excludes Mangawhai*	As per council contractor's quote + 15%

Connections to public infrastructure are undertaken by Council contractors or can be completed by a certified drainlayer by arrangement with the Council engineer.
The connection fee is costed for a standard residential connection. It includes a "y" junction and piping to the boundary.

Connections must be as per Council's Engineering Standards.

Office Use Only

Customer Number _____

Services Map Supplied _____

Site Plan Attached _____

Fees Paid _____

Receipt Number _____

06 April 2021

Rachyl Edge and Regan Randell
104 Te Kowhai Drive
Maungatapere 0179

Dear Rachyl Edge and Regan Randell,

Section 45 request for further information on Building Consent including PIM

Reference Number: 210208
Project Location: 8 Sampsons Way
Dargaville
Project Description: Construct 3 Bedroom Dwelling with Attached Garage

This communication is to advise that your application has been checked for compliance with section 45 of the Building Act and does not contain sufficient information to enable building consent processing to begin.

MBIE recommend returning or rejecting applications that are not complete. This is sub-optimal, so rather than rejecting your application could you simply attach and return the information requested below to this email.

All information is to be supplied within 28 days (or the application may be refused). Please keep us informed if additional time is required.

We will advise you when we are in receipt of a complying section 45 application and start the building consent process and statutory time tracking in accordance with section 48 of of the Act.

Should further information be required during processing we will communicate via email. An email request for further information will stop the statutory time clock until sufficient information is provided to enable processing to be completed.

Main Building

Deposit / Fee
Please arrange payment of the deposit fee to complete the s45 lodgment process. The deposit/fee for the application is $5894.75 Bank Details for internet banking are shown at the bottom of this letter. Please quote the reference number off the top of this letter in the particulars field.

The invoice has been emailed to - genna.jones@gjgardner.co.nz

Elevations

Elevations do not provide sufficient information to enable a compliance decision. Please provide further information that shows:

a. Manufacturer specification for the brick cladding

b. Weathertight Matrix if E2/AS1 is used

Construction & Weathertightness Detailing

There is insufficient construction detail provided to enable a compliance decision. Please provide:

a. Engineers calculations for foundation design or Firth Ribraft Technical Manual

My apologies if any of the above matters are already covered by the documents but have been overlooked.

Should you have any queries regarding this letter, please reply to this email or phone our technical administration team on (09) 439 3123.

Yours sincerely,

Fay Fergus
Building Technical Support
On behalf of: Kaipara District Council

Kaipara District Council Bank Details
BNZ Dargaville
02 0308 0090743 07

BC210208: VRFI Customer Portal Responses

Form 4
Certificate attached to Project Information Memorandum

Section 37, Building Act 2004

RE: BC210208, Rachyl Edge and Regan Randell, 8 Sampsons Way
Dargaville

Restrictions on commencing building work under the Resource Management Act 1991

The building work referred to in the attached project information memorandum or building consent is also required to have the following resource consents under the Resource Management Act 1991:

13.10.01a - Excavation and Fill:
Please demonstrate compliance with this rule by providing compliant earthwork volumes

13.10.25 - Vehicle Access and Driveways:
1. Control of reversing provisions will not comply and will therefore be classed as a Restricted Discretionary Activity so resource consent will be required to be obtained before this activity can occur.

13.10.27 - Parking:
1. Control of reversing provisions will not comply and will therefore be classed as a Restricted Discretionary Activity so resource consent will be required to be obtained before this activity can occur.

Resource consents will or may materially affect the building work to which the attached project information memorandum relates. Until resource consent has been granted, building work may not proceed.

Failure to comply with the requirements of this notice may result in legal action being taken against you under the Resource Management Act 1991.

Matthew Bayly
Planning Team
On behalf of: Kaipara District Council
Issue Date: 23 April 2021

Project information memorandum

Section 34, Building Act 2004

Application

Owner:	Rachyl Edge and Regan Randell C/- GJ Gardner PO Box 8046 Kensington Whangarei 0145
Issue Date:	05 May 2021

Project

Description:	Construct 3 Bedroom Dwelling with Attached Garage
Intended use:	2.0 Housing: 2.0.2 Detached Dwelling
Location:	8 Sampsons Way Dargaville
Legal description:	Lot 8 DP 542244
Valuation number:	0095000208

Please Note: This is not an approval to start building work. Please ensure your Building Consent is issued prior to commencing any work. Upon receiving your building consent please check carefully and ensure that compliance with any Conditions, District Planning restrictions or Resource Consent conditions are satisfied. The information below should be read with the understanding that should changes be made at building consent stage then this may alter the requirements listed below.

This project information memorandum does NOT constitute a building consent.

Heritage status of the building

Building work associated with this project will not be affecting land or structures that have heritage status. This project is exempt from the rules of the district plan that relate to heritage buildings.

Notable trees

Council is not aware of there being any notable trees associated with this site. Therefore the project is exempt from the rules of the District Plan that relate to Notable Trees.

Special features of the land concerned

There are no known special features of the land concerned - this includes potential natural hazards, or the likely presence of hazardous contaminants that is likely to be relevant to the design and construction or alteration of the building or proposed buildings; and that is known to the Territorial Authority; and that is not apparent from the district plan under the Resource Management Act 1991.

"Land concerned" means the land on which the proposed building work is to be carried out; and includes any

other land likely to affect or be affected by the building work.

"Special feature of the land concerned" includes, without limitation, potential natural hazards, or the likely presence of hazardous contaminants, that -
a) are likely to be relevant to the design and construction or alteration of the building or proposed building; and
b) is known to the Territorial Authority; and
c) is not apparent from the District Plan under the Resource Management Act 1991.

Details of existing stormwater or wastewater systems relating to proposed building work
There are existing storm water services available on, or adjacent to, the site of the proposed building work.

There are existing wastewater utility services available on, or adjacent to, the site of the proposed building work.

Other information
Once a Building Consent is issued, the Council will follow up on building work not completed within two years of building consent issue.

A Building Consent lapses and is of no effect if the building work has not been started within 12 months of the date of issue.

If the building is public premises it may not be occupied until either a Code Compliance Certificate or Certificate for Public Use has been issued.

If the building is wholly or partly a dam, a Project Information Memorandum and Building Consent must be obtained from the regional authority.

The Northland Regional Council has a register of contaminated sites. Please contact them on 0800 002 004 if you suspect that your property may be contaminated e.g. historic timber treatment sites, service stations, landfill sites.

Please check your Certificate of Title for any encumbrances (such as easements, section 73 notice) before you make an application for a Building Consent.

All archaeological sites are protected under the provisions of the Historic Places Act 1993. If subsurface archaeological evidence (shell, midden, hangi, storage pits, etc) should be unearthed during construction, work should cease in the immediate vicinity of the remains and the Historic Places Trust should be contacted.

The proposed project does not comply with the District Plan zoning as it does not meet the Residential Zone Rules. Please see the attached Form 4.

Consent Notice:11765180.3
Please be advised there are consent notices registered against this property. A breach of these conditions may result in legal action.

Council's desktop assessment has found that the site wind zone rating is high

The Council has found that the site exposure zone is zone C - Inland

Development Contributions do not apply to this project.

The proposed vehicle access (gradient / width / length) needs to comply with the requirements of the District Plan / Council's Engineering Standards. Attached if required, for your use, is a copy of the crossing application form.

ATTACHMENTS:
-Form 4
-Consent Notices
-Vehicle Crossing application form
-GIS map of property and utilities

Notes:
1. The information supplied in the sections of this project information memorandum is specific to the building project to which the application relates by reference to Council files and records. No property inspection, or title search, has been undertaken. To enable the Council to measure the accuracy of this document based on our current records we would appreciate your response should you find any information contained herein which may be considered to be incorrect or omitted. Please telephone the Council (09) 439 3123.

2. The Council has used its best endeavors to ensure that all information provided in this project information memorandum is correct and complete in all material respects. In the event that a material error or omission can be proven the Council's liability, whether in contract or in tort shall be limited to the fee paid to Council to obtain this report.

3. This information reflects the Kaipara District Council's current understanding of information which is relevant to the project. This is based only on the information thus far provided to it and held on record. As a result the Council is not in a position to warrant that the information is complete or without error and accepts no liability for any inaccuracy in, or omission from, this information.

4. The information contained in this project information memorandum is current at the date the memorandum is issued. Further relevant information may come into the Council's possession subsequent to the date of issue.

Form 4
Certificate attached to Project Information Memorandum

Section 37, Building Act 2004

RE: BC210208, Rachyl Edge and Regan Randell, 8 Sampsons Way
Dargaville

Restrictions on commencing building work under the Resource Management Act 1991

The building work referred to in the attached project information memorandum or building consent is also required to have the following resource consents under the Resource Management Act 1991:

13.10.01a - Excavation and Fill:
Please demonstrate compliance with this rule by providing compliant earthwork volumes

13.10.25 - Vehicle Access and Driveways:
1. Control of reversing provisions will not comply and will therefore be classed as a Restricted Discretionary Activity so resource consent will be required to be obtained before this activity can occur.

13.10.27 - Parking:
1. Control of reversing provisions will not comply and will therefore be classed as a Restricted Discretionary Activity so resource consent will be required to be obtained before this activity can occur.

Resource consents will or may materially affect the building work to which the attached project information memorandum relates. Until resource consent has been granted, building work may not proceed.

Failure to comply with the requirements of this notice may result in legal action being taken against you under the Resource Management Act 1991.

Matthew Bayly
Planning Team
On behalf of: Kaipara District Council
Issue Date: 23 April 2021

210208-Assets

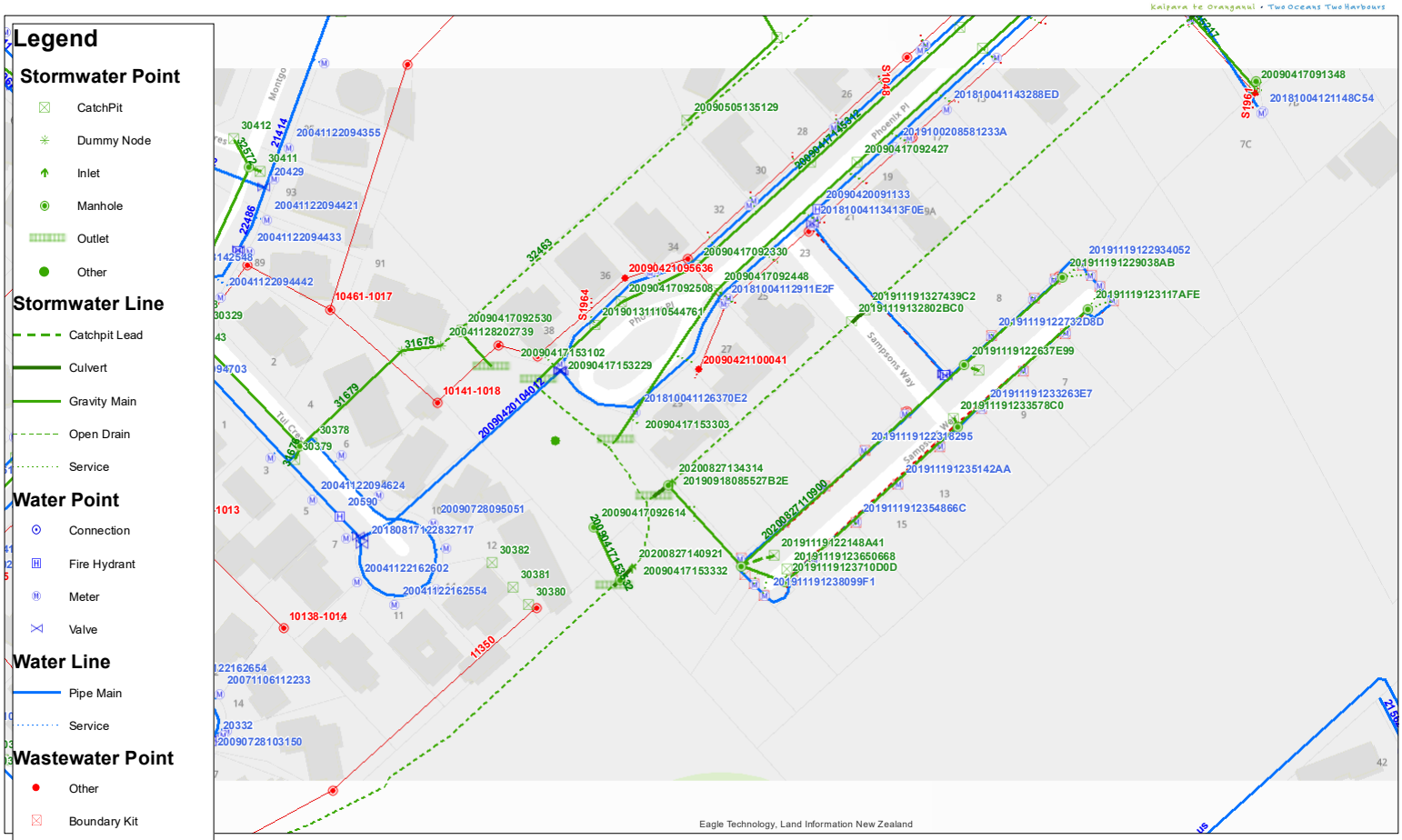

Scale: 1:1,128

Original Sheet Size: A3

Projection: NZGD 2000 New Zealand Transverse Mercator

Bounds: 1,677,889.8839 6,023,670.8454
1,678,347.6013 6,023,402.3557

The information provided is an indication only and needs to be validated in the field.
Kaipara District Council accepts no responsibility for errors or omissions for loss or damage resulting from the reliance or use of this information. Cadastral information is derived from LINZ's Digital Cadastral Record System (CRS) CROWN COPYRIGHT RESERVED.

RECORD OF TITLE
UNDER LAND TRANSFER ACT 2017
FREEHOLD

Search Copy

R.W. Muir
Registrar-General
of Land

Identifier **912640**
Land Registration District **North Auckland**
Date Issued 05 June 2020

Prior References
NA62D/391

Estate Fee Simple
Area 619 square metres more or less
Legal Description Lot 8 Deposited Plan 542244
Registered Owners
Regan John Randell and Rachyl Irene Edge

Interests

11765180.3 Consent Notice pursuant to Section 221 Resource Management Act 1991 - 5.6.2020 at 12:20 pm

Land Covenant in Covenant Instrument 11765180.4 - 5.6.2020 at 12:20 pm

Appurtenant hereto is a right of way, a right to convey electricity, telecommunications and water and a right to drain water and sewage created by Easement Instrument 11765180.7 - 5.6.2020 at 12:20 pm

The easements created by Easement Instrument 11765180.7 are subject to Section 243 (a) Resource Management Act 1991

11959861.2 Mortgage to ASB Bank Limited - 21.12.2020 at 1:26 pm

Identifier **912640**

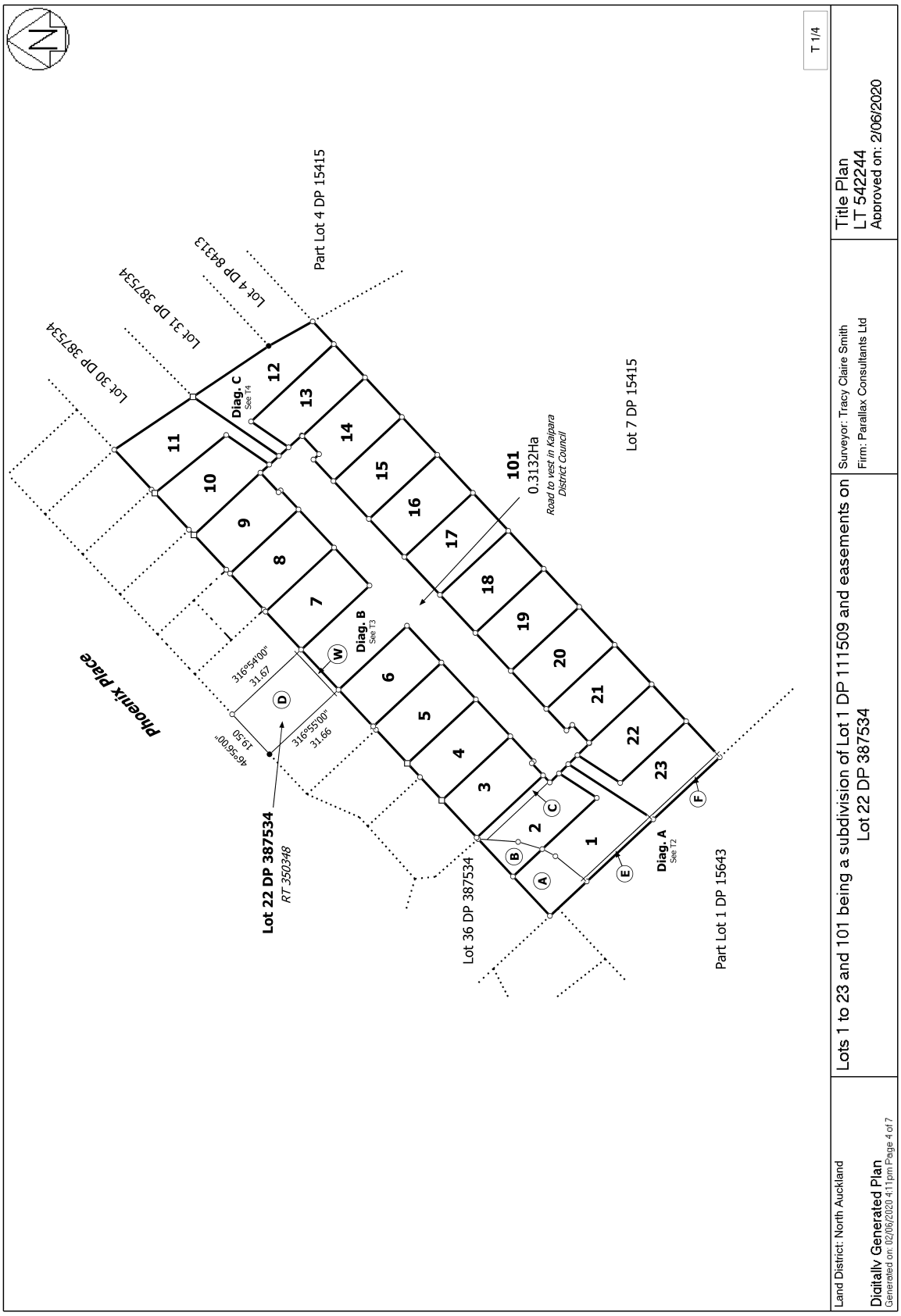

Identifier **912640**

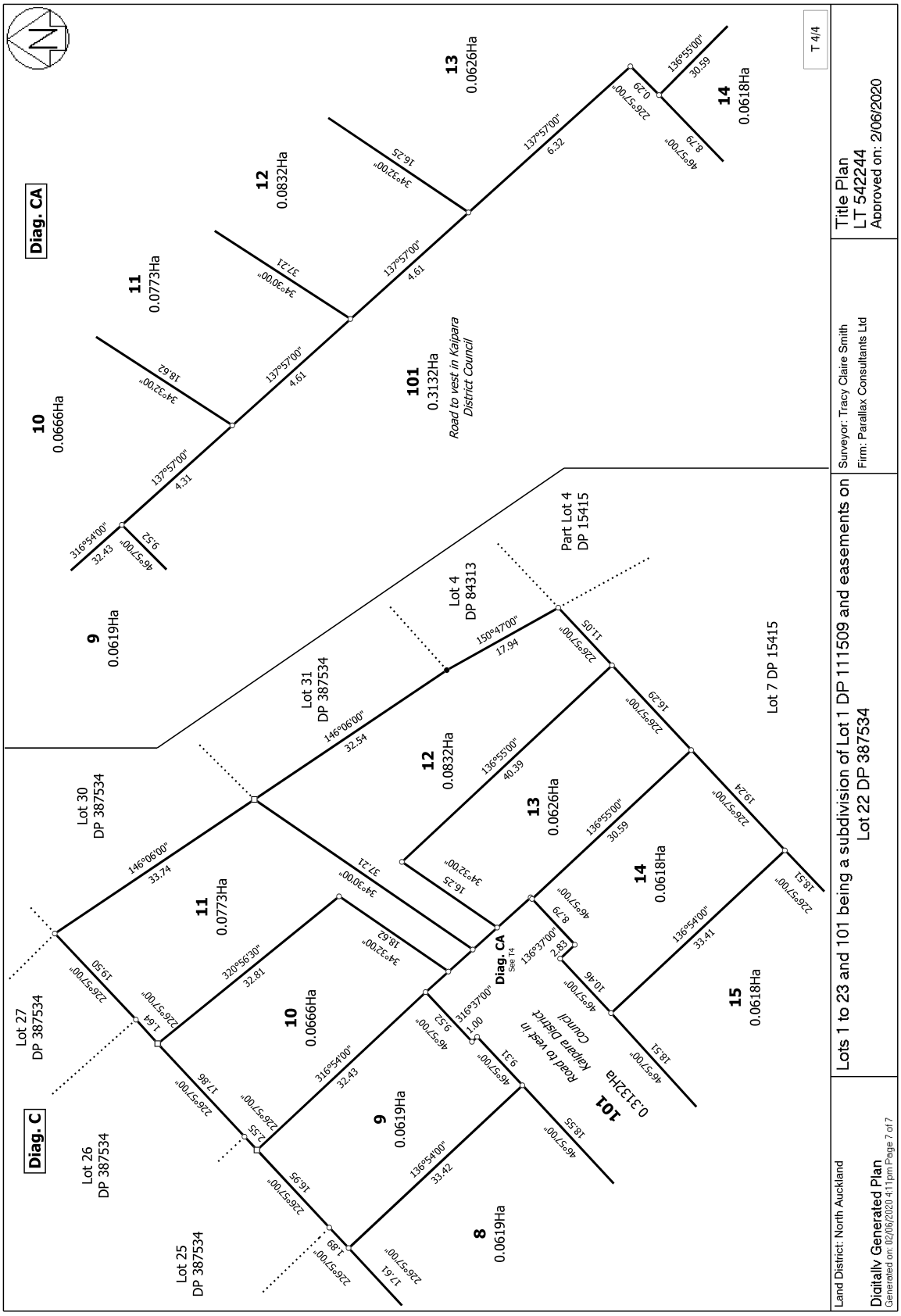

Landonline

View Instrument Details

Toitu te Land whenua Information New Zealand

Instrument No.	11765180.3
Status	Registered
Date & Time Lodged	05 Jun 2020 12:20
Lodged By	Dempster, Vicki Marie
Instrument Type	Consent Notice under s221(4)(a) Resource Management Act 1991

Affected Records of Title	Land District
912633	North Auckland
912634	North Auckland
912635	North Auckland
912636	North Auckland
912637	North Auckland
912638	North Auckland
912639	North Auckland
912640	North Auckland
912641	North Auckland
912642	North Auckland
912643	North Auckland
912644	North Auckland
912645	North Auckland
912646	North Auckland
912647	North Auckland
912648	North Auckland
912649	North Auckland
912650	North Auckland
912651	North Auckland
912652	North Auckland
912653	North Auckland
912654	North Auckland
912655	North Auckland

Annexure Schedule Contains 3 Pages.

Signature

Signed by Vicki Marie Dempster as Territorial Authority Representative on 04/06/2020 09:57 AM

***** End of Report *****

© Copyright: Land Information New Zealand

IN THE MATTER of the Resource Management Act 1991 ("**Act**")

AND

IN THE MATTER of the subdivision of land shown in Deposited Plan 542244 (North Auckland Registry) ("**Plan**")

CONSENT NOTICE
(Section 221 of the Act)

KAIPARA DISTRICT COUNCIL ("**Council**") being the territorial authority of the district within which the land described in the First Schedule below ("**Land**") is located has consented to the subdivision of the Land as shown in the Plan subject to the conditions of the Second Schedule below to be complied with on a continuing basis by the Owner (as defined in the Act).

FIRST SCHEDULE
(Land)

ALL the land being Lot 22 Deposited Plan 387534 comprised in Identifier 350348 and Lot 1 Deposited Plan 111609 comprised in Identifier NA62D/391.

SECOND SCHEDULE
(Conditions)

The Owner (as defined in the Act) must, on a continuing basis, to the satisfaction of the Council, comply with the following conditions of the Council's Subdivision Consent RM180003A, namely:

1. In respect of all lots 1 to 23 (inclusive) on the Plan:

1.1 Earthworks, the location of buildings, building foundations and storm water to be subject to specific engineering design by a suitably qualified Chartered Professional Engineer having regard to any soil instability/saturation issues that may exist or arise as a result of the development. Design should take into account any of the recommendations identified in the Geotechnical Investigation and Engineering Report (Reference 11546), dated 27 August 2018, prepared by Hawthorn Geddes.

1.2 Each lot will require specific foundation design at Building Consent stage to ensure that future dwellings are designed and constructed with due accordance paid to the highly sensitive nature of the sub soils present on the site.

1.3 No vehicle crossing(s) is provided to the lots. All lots must form a complying vehicle crossing consistent with the Kaipara District Council Engineering Standard 2011 at the time of the construction of a dwelling. Prior to commencement of any construction work, in relation to vehicle crossings, the owner(s) shall have a vehicle crossing permit for each lot and shall enter into a Bond in a form to the approval of Council guaranteeing that in the event of damage to existing Council assets or abandonment of the work by the consent holder, that all existing Council assets will be returned to a condition at least equal to that which existed prior to the commencement of work. The bond shall be for the sum of $5,000 and shall remain in full force and effect until such time as all work has been completed and any necessary remedial work completed to the satisfaction of Council

2. In respect of Lots 1 and 12 to 23 (inclusive) on the Plan (each a "Lot"):

2.1 The owner(s) shall not and nor shall any occupier of or visitor to the Lot make, and surrenders the right to make, a complaint to the relevant consent authority or the Environment Court, as to any reverse sensitivity effects, including any emission of noise, vibration or any effect associated with any activity which is expressly allowed by a rule in a regional or District Plan, a resource consent, a designation, or regulations made under the Resource Management Act 1991 ('RMA') and shall not seek that a declaration or enforcement order be made by the Environment Court under sections 311 or 316 of the RMA, nor seek that an abatement or infringement notice be served by a duly authorised enforcement officer under sections 322 or 343C of the RMA, or that criminal proceedings be commenced in the District Court by the relevant consent authority under section 338 of the RMA in respect of any lawful activity carried out by the Dargaville High School; (Lot 7 DP 15415; Lot 1 DP 28811; Lot 4 DP 36061; PT Lot 13 DP 14511; PT Lot 8 DP 15415; PT Lot 1 DP 1 5643).

2.2 The owner of a Lot shall not be a party to, finance or contribute to the costs of any complaint, application for other proceedings or process specified in condition 2.1 above.

2.3 Any future dwelling shall have double glazing on all habitable room windows located on the south eastern and south western sides of the dwelling (the sides of the dwelling facing the

Dargaville High School property, being Lot 7 DP 15415; Lot 1 DP 28611; Lot 4 DP 36061; PT Lot 13 DP 14511; PT Lot 8 DP 15415; PT Lot 1 DP 1 5643).

2.4 Screening shall be undertaken that consists of a 1.8m high solid fence or a minimum 1.8m high planting, of no less than 1 metre depth along the west and south eastern boundary bordering the Dargaville High School property (being Lot 7 DP 15415; Lot 1 DP 28611; Lot 4 DP 36061; PT Lot 13 DP 14511; PT Lot 8 DP 15415; PT Lot 1 DP 1 5643).

DATED the 5th day of May 2020

SIGNED by the Council
by its authorised signatory

Dina Tetzner

View Instrument Details

Instrument No.	11765180.4
Status	Registered
Date & Time Lodged	05 Jun 2020 12:20
Lodged By	Dempster, Vicki Marie
Instrument Type	Land Covenant under s116(1)(a) or (b) Land Transfer Act 2017

Affected Records of Title	Land District
912633	North Auckland
912634	North Auckland
912635	North Auckland
912636	North Auckland
912637	North Auckland
912638	North Auckland
912639	North Auckland
912640	North Auckland
912641	North Auckland
912642	North Auckland
912643	North Auckland
912644	North Auckland
912645	North Auckland
912646	North Auckland
912647	North Auckland
912648	North Auckland
912649	North Auckland
912650	North Auckland
912651	North Auckland
912652	North Auckland
912653	North Auckland
912654	North Auckland
912655	North Auckland

Annexure Schedule Contains 6 Pages.

Covenantor Certifications

I certify that I have the authority to act for the Covenantor and that the party has the legal capacity to authorise me to lodge this instrument ☑

I certify that I have taken reasonable steps to confirm the identity of the person who gave me authority to lodge this instrument ☑

I certify that any statutory provisions specified by the Registrar for this class of instrument have been complied with or do not apply ☑

I certify that I hold evidence showing the truth of the certifications I have given and will retain that evidence for the prescribed period ☑

Signature

Signed by Vicki Marie Dempster as Covenantor Representative on 04/06/2020 09:42 AM

Covenantee Certifications

I certify that I have the authority to act for the Covenantee and that the party has the legal capacity to authorise me to lodge this instrument ☑

I certify that I have taken reasonable steps to confirm the identity of the person who gave me authority to lodge this instrument ☑

I certify that any statutory provisions specified by the Registrar for this class of instrument have been complied with or do not apply ☑

I certify that I hold evidence showing the truth of the certifications I have given and will retain that evidence for the prescribed period ☑

Signature

Signed by Vicki Marie Dempster as Covenantee Representative on 04/06/2020 09:42 AM

***** End of Report *****

KAIPARA DISTRICT

Kaipara te Oranganui • Two Oceans Two Harbours

Vehicle Crossing Permit Application

KAIPARA DISTRICT COUNCIL

Application No .....

Resource Consent No .....
(only required if current RC exists of which a VC permit is a part of)

Applicants Details

Owner's Name .....

Postal Address .....

Contact Telephone No .....Email .....

Agent Name .....

Postal Address .....

Contact Telephone No .....Email .....

Send permit to: ☐ Owner ☐ Agent

Site Location

Street/Rapid No ..... Road Name .....

Town or Locality .....

Legal Description ..... Valuation No .....

Contractor/Traffic Management Plan Details

Please Note: ***Application will not be accepted by Council if a Plan is not attached for the location of your vehicle access. If constructing a vehicle crossing, your application will be rejected if a Traffic Management Plan is not attached.***

Name of person/firm constructing the crossing .....

Person in Charge of Traffic Management .....

Postal Address .....

Contact Telephone No .....Email .....

Crossing Information Required

Location:

Adjacent Road is: .....

☐ Urban (S05) ☐ Rural (S06)

☐ Sealed with kerb and channel ☐ Sealed with no kerb and channel ☐ Metalled

Intended Use

☐ Residential ☐ Commercial ☐ Other *(please specify)*.....

KAIPARA DISTRICT
Kaipara te Oranganui • Two Oceans Two Harbours

Vehicle Crossing Permit Application

KAIPARA DISTRICT COUNCIL

SITE LOCALITY PLAN

Map Showing Location of Vehicle Crossing	**Please show the following:** • Roads • Property boundaries • Location of entranceway – including **distances** from boundaries and adjacent numbered property entrances • Other identifiable land marks, buildings etc.
Property Description:	
Road Name:	

The Application Fee must be paid before permit the can be processed.
If the applicant has a current resource consent of which the Vehicle Crossing is a part of the fee to be charged is $345.00, an additional inspection fee will be charged as part of the consent application. For all other applications the fee is $485.00 which includes the pre and post approval inspections.

NB: A further $150.00 will be charged if an additional inspection is required.

Signed by Owner/Agent: …… Date: ..... ……

Office Use Only

Receipt No: ..... Date: .....

RCA consent (eg CAR/WAP) and/or RCA contract reference	

TRAFFIC MANAGEMENT PLAN (TMP) – SHORT FORM

*Complete **short form** if simple activity and RCA permits. Refer to the NZ Transport Agency's Traffic control devices manual, part 8 Code of practice for temporary traffic management (CoPTTM), section E, appendix A for a guide on how to complete each field.*

Organisations/ TMP reference	TMP reference:	Contractor:	Principal ***(Client)*:**			
			RCA:			
Location details and road characteristics	Road names and suburb		House no. / RPs ***(From and to)***	Road level	Permanent speed	AADT/Peak flows
Description of work activity						

Planned work programme

Start date		Time		End date		Time	
Consider significant stages, **for example:** • **road closures** • **detours** • **no activity periods.**							
Alternative dates if activity delayed							

Road aspects affected ***(delete either Yes or No to show which aspects are affected)***

Pedestrians affected?	**Yes No**	Property access affected?	**Yes No**	Traffic lanes affected?	**Yes No**
Cyclists affected?	**Yes No**	Restricted parking affected?	**Yes No**	Delays or queuing likely?	**Yes No**

TSL/ Diagram ***(see TSL decision matrix for guidance)***	TSL details as required **Approval of Temporary Speed Limits (TSL) are in terms of Section 5 of Land Transport Rule: Setting of Speed Limits 2003,Rule 54001** ***(List speed, length and location)***	Times ***(From and to)***	Dates ***(Start and finish)***	Diagram ref. no's ***(Layout drawings or TMDs)***
Attended day/ night	**A temporary maximum speed limit of km/h is hereby fixed for motor vehicles travelling over the length of m situated between (House no./RP) and (House no./RP) on (street or road name)**			
Unattended day/ night	**A temporary maximum speed limit of km/h is hereby fixed for motor vehicles travelling over the length of m situated between (House no./RP) and (House no./RP) on (street or road name)**			

RCA consent (eg CAR/WAP) and/or RCA contract reference	

Contingency plan		
If long queues form or delays exceed 5mins *(or any other period required by RCA),* site to be disestablished or additional lanes made available.	**Adjust TMD to suit unforeseen circumstances *(eg weather or site overlaps with another work site)*.**	**Emergency services will be accommodated and access provided through the site as required.**
Add additional contingencies:		

Contact details

	Name	24/7 contact number	CoPTTM ID	Qualification	Expiry date
Principal					
TMC					
Engineers' representative					
Contractor					
STMS					
TC					
Others as required					

TMP preparation (or approval if STMS delegated authority to approve TMPs)

Delete the option that does not apply (either prepared or approved)

Prepared / Approved						
	Name	**Date**	***Signature***	***ID no.***	***Qualification***	***Expiry date***
This TMP meets CoPTTM requirements			Number of diagrams attached			
TMP returned for correction						
	Name	**Date**	***Signature***	***ID no.***	***Qualification***	***Expiry date***

Engineer/TMC to complete following section when approval or acceptance required

Approved by TMC or engineer ***(delete one)***						
	Name	**Date**	***Signature***	***ID no.***	***Qualification***	***Expiry date***
Acceptance by TMC ***(if required)***						
	Name	**Date**	***Signature***	***ID no.***	***Qualification***	***Expiry date***

Qualifier for engineer or TMC approval

RCA consent (eg CAR/WAP) and/or RCA contract reference	

Approval of this TMP authorises the use of any regulatory signs included in the TMP or attached traffic management diagrams.

This TMP is approved on the following basis:

1. To the best of the approving engineer's/TMC's judgment this TMP conforms to the requirements of CoPTTM.

2. This plan is approved on the basis that the activity, the location and the road environment have been correctly represented by the applicant. Any inaccuracy in the portrayal of this information is the responsibility of the applicant.

3. The STMS for the activity is reminded that it is the STMS's duty to postpone, cancel or modify operations due to the adverse traffic, weather or other conditions that affect the safety of this site.

27 April 2021

Rachyl Edge and Regan Randell
104 Te Kowhai Drive
Maungatapere 0179

Dear Sir or Madam,

Request for further information on project information memorandum / building consent application - section 48

Reference Number: 210208.1
Project Location: 8 Sampsons Way
Dargaville
Project Description: Construct 3 Bedroom Dwelling with Attached Garage

Processing of your building consent application in accordance with section 48 of the Act is currently in progress. To enable this work to be completed the following additional information / clarification is required to ensure compliance with the building code is demonstrated:

Main Building

Section 45: Consent Documents
RFI 1: I have identified other methods of compliance specified or used within consent documentation. As you are unable to revise the application form, please confirm these compliance methods are to be included:
B1 - VM1/VM4 (engineering, Truss design).
Please also feel free to advise of any other compliance methods that need to be added to or changed on the application form.

Section 268 - 272: Product Certificates
RFI 1: Codemark for Masons 40 Below Window tape has been superceded. Please provide current codemark.

Site Considerations
RFI 1: Please confirm liquefaction risk according to known ground conditions.

Miscellaneous - Other
Note: Please note, a structural review of foundation design has been requested - there may be further RFI's depending on review.

B1: Footings, Foundations (In-situ, masonry, SED)
RFI 1: Please provide a copy of the Firth Ribraft technical manual.

B1: Floor Slab
RFI 1: Please note on the foundation plan the excavation requirements and hardfill as noted in the geotechnical report.

B1: Walls, Wall bracing, Posts, Beams
RFI 1: Please provide supporting calculations for Lintel and verandah beams design.

B2: DURABILITY
RFI 1:
1.BRANZ appraisal for Gib Aqualine has been superceded. Please provided current appraisal.
2. Please provide manufacturer technical specifications for selected weatherboard.

D1: Access Routes - Residential
RFI 1: Please specify surface for access route compliant with D1/AS1 Table 2 for slip resistance.

E1: Surface Water
RFI 1: Please show subsoil drainage to a sump prior to connection to council SW connection.

F2: Hazardous Building Materials
RFI 1: Please provide specifications for Glazing.

G4: Ventilation
RFI 1: Please specify mechanical extract ventilation to comply with G4/AS1 1.2.5, ie 25 L/s for showers and baths and 50 L/s for cooktops.

G13: Foul Water
RFI 1: Please provide manufacturer technical specification for the E-One pressure sewer system.

When responding via email, just select "reply" which will automatically link your reply back to your application and ensure it receives prompt attention.

Please ensure that:
- Drawing amendments are clearly identified and document changes are referenced (e.g revision clouds);
- All attached files are in PDF format and all documents are printable at the correct scale;
- Maximum document size for printing is A3;
- All information is to be supplied within 28 days (or the application may be refused). Please keep us

informed if additional time is required.

Your consent application has been temporarily placed on hold while we await this information.

Yours Faithfully,

Sharon Campbell
Contractor
On behalf of: Kaipara District Council

30 April 2021

Rachyl Edge and Regan Randell
104 Te Kowhai Drive
Maungatapere 0179

Dear Sir or Madam,

Request for further information on project information memorandum / building consent application - section 48

Reference Number: 210208.2
Project Location: 8 Sampsons Way
Dargaville
Project Description: Construct 3 Bedroom Dwelling with Attached Garage

Processing of your building consent application in accordance with section 48 of the Act is currently in progress. To enable this work to be completed the following additional information / clarification is required to ensure compliance with the building code is demonstrated:

Main Building

Section 45: Consent Documents
RFI 1: I have identified other methods of compliance specified or used within consent documentation. As you are unable to revise the application form, please confirm these compliance methods are to be included:
B1 - VM1/VM4 (engineering, Truss design).
Please also feel free to advise of any other compliance methods that need to be added to or changed on the application form.

Section 268 - 272: Product Certificates
RFI 1: Codemark for Masons 40 Below Window tape has been superceded. Please provide current codemark.

Site Considerations
RFI 1: Please confirm liquefaction risk according to known ground conditions.

Miscellaneous - Other
Note: Please note, a structural review of foundation design has been requested - there may be further RFI's depending on review.

B1: Footings, Foundations (In-situ, masonry, SED)
RFI 1: Please provide a copy of the Firth Ribraft technical manual.

B1: Floor Slab
RFI 1: Structural engineer review: The Hawthorn Geddes geotechnical report states that a waffle foundation slab is not suitable for this site due to ground water encountered at less than 0.6m below ground surface. Please confirm your drainage proposal with the Hawthorn Geddes geotechnical engineer. Provide confirmation that the drainage system proposed would be effective in mitigating the issue with high water table.
RFI 1: Please note on the foundation plan the excavation requirements and hardfill as noted in the geotechnical report.

B1: Walls, Wall bracing, Posts, Beams
RFI 1: Please provide supporting calculations for Lintel and verandah beams design.

B2: DURABILITY
RFI 1:
1.BRANZ appraisal for Gib Aqualine has been superceded. Please provided current appraisal.
2. Please provide manufacturer technical specifications for selected weatherboard.

D1: Access Routes - Residential
RFI 1: Please specify surface for access route compliant with D1/AS1 Table 2 for slip resistance.

E1: Surface Water
RFI 1: Please show subsoil drainage to a sump prior to connection to council SW connection.

F2: Hazardous Building Materials
RFI 1: Please provide specifications for Glazing.

G4: Ventilation
RFI 1: Please specify mechanical extract ventilation to comply with G4/AS1 1.2.5, ie 25 L/s for showers and baths and 50 L/s for cooktops.

G13: Foul Water
RFI 1: Please provide manufacturer technical specification for the E-One pressure sewer system.

When responding via email, just select "reply" which will automatically link your reply back to your application and ensure it receives prompt attention.

Please ensure that:
- Drawing amendments are clearly identified and document changes are referenced (e.g revision clouds);
- All attached files are in PDF format and all documents are printable at the correct scale;
- Maximum document size for printing is A3;
- All information is to be supplied within 28 days (or the application may be refused). Please keep us informed if additional time is required.

Your consent application has been temporarily placed on hold while we await this information.

Yours Faithfully,

Sharon Campbell
Contractor
On behalf of: Kaipara District Council

30 April 2021

Rachyl Edge and Regan Randell
104 Te Kowhai Drive
Maungatapere 0179

Dear Sir or Madam,

Request for further information on project information memorandum / building consent application - section 48

Reference Number: 210208.3
Project Location: 8 Sampsons Way
Dargaville
Project Description: Construct 3 Bedroom Dwelling with Attached Garage

Processing of your building consent application in accordance with section 48 of the Act is currently in progress. To enable this work to be completed the following additional information / clarification is required to ensure compliance with the building code is demonstrated:

Main Building

B1: Floor Slab
RFI 1: Structural engineer review: The Hawthorn Geddes geotechnical report states that a waffle foundation slab is not suitable for this site due to ground water encountered at less than 0.6m below ground surface. Please confirm your drainage proposal with the Hawthorn Geddes geotechnical engineer. Provide confirmation that the drainage system proposed would be effective in mitigating the issue with high water table.
RFI 1: Please note on the foundation plan the excavation requirements and hardfill as noted in the geotechnical report.
RFI 2: Hardfill and backfill requires are not the excavation requirements. Please note on the foundation plan as per the geotech report - excavation required down to the hard pan.

B1: Walls, Wall bracing, Posts, Beams
RFI 1: Please provide supporting calculations for Lintel and verandah beams design.
RFI 2: Though the truss manufacturer has designed these, we still require the supporting documents for their design. I suggest to contact the truss manufacturer for the supporting documents as they are well aware of what is required and are generally always provided with truss design documents for building consent purposes.

When responding via email, just select "reply" which will automatically link your reply back to your application and ensure it receives prompt attention.

Please ensure that:
- Drawing amendments are clearly identified and document changes are referenced (e.g revision clouds);
- All attached files are in PDF format and all documents are printable at the correct scale;
- Maximum document size for printing is A3;
- All information is to be supplied within 28 days (or the application may be refused). Please keep us informed if additional time is required.

Your consent application has been temporarily placed on hold while we await this information.

Yours Faithfully,

Sharon Campbell
Contractor
On behalf of: Kaipara District Council

07 May 2021

Rachyl Edge and Regan Randell
104 Te Kowhai Drive
Maungatapere 0179

Dear Sir or Madam,

Request for further information on project information memorandum / building consent application - section 48

Reference Number: 210208.4
Project Location: 8 Sampsons Way
Dargaville
Project Description: Construct 3 Bedroom Dwelling with Attached Garage

Processing of your building consent application in accordance with section 48 of the Act is currently in progress. To enable this work to be completed the following additional information / clarification is required to ensure compliance with the building code is demonstrated:

Main Building

B1: Floor Slab
RFI 1: Structural engineer review: The Hawthorn Geddes geotechnical report states that a waffle foundation slab is not suitable for this site due to ground water encountered at less than 0.6m below ground surface. Please confirm your drainage proposal with the Hawthorn Geddes geotechnical engineer. Provide confirmation that the drainage system proposed would be effective in mitigating the issue with high water table.

RFI 2: A response was received 3 May, which was confirmation of RS Eng design. Comment from Hawthorn Geddes geotechnical engineer is required to confirm that this design is sufficient.
RFI 1: Please note on the foundation plan the excavation requirements and hardfill as noted in the geotechnical report.
RFI 2: Hardfill and backfill requires are not the excavation requirements. Please note on the foundation plan as per the geotech report - excavation required down to the hard pan.

B1: Walls, Wall bracing, Posts, Beams
RFI 1: Please provide supporting calculations for Lintel and verandah beams design.
RFI 2: Though the truss manufacturer has designed these, we still require the supporting documents for their design. I suggest to contact the truss manufacturer for the supporting documents as they are well aware of

what is required and are generally always provided with truss design documents for building consent purposes.
RFI 3: We do not appear to have received calculations for all Hy90 lintels. Please provide supporting docs/calculations for all lintels outside NZS3604:2011.

When responding via email, just select "reply" which will automatically link your reply back to your application and ensure it receives prompt attention.

Please ensure that:
- Drawing amendments are clearly identified and document changes are referenced (e.g revision clouds);
- All attached files are in PDF format and all documents are printable at the correct scale;
- Maximum document size for printing is A3;
- All information is to be supplied within 28 days (or the application may be refused). Please keep us informed if additional time is required.

Your consent application has been temporarily placed on hold while we await this information.

Yours Faithfully,

Sharon Campbell
Contractor
On behalf of: Kaipara District Council

13 May 2021

Rachyl Edge and Regan Randell
104 Te Kowhai Drive
Maungatapere 0179

Dear Sir or Madam,

Request for further information on project information memorandum / building consent application - section 48

Reference Number: 210208.5
Project Location: 8 Sampsons Way
Dargaville
Project Description: Construct 3 Bedroom Dwelling with Attached Garage

Processing of your building consent application in accordance with section 48 of the Act is currently in progress. To enable this work to be completed the following additional information / clarification is required to ensure compliance with the building code is demonstrated:

Main Building

B1: Floor Slab
RFI 1: Structural engineer review: The Hawthorn Geddes geotechnical report states that a waffle foundation slab is not suitable for this site due to ground water encountered at less than 0.6m below ground surface. Please confirm your drainage proposal with the Hawthorn Geddes geotechnical engineer. Provide confirmation that the drainage system proposed would be effective in mitigating the issue with high water table.

RFI 2: A response was received 3 May, which was confirmation of RS Eng design. Comment from Hawthorn Geddes geotechnical engineer is required to confirm that this design is sufficient.

RFI 4: We are still waiting a response to this RFI item.

B1: Walls, Wall bracing, Posts, Beams
RFI 1: Please provide supporting calculations for Lintel and verandah beams design.
RFI 2: Though the truss manufacturer has designed these, we still require the supporting documents for their design. I suggest to contact the truss manufacturer for the supporting documents as they are well aware of what is required and are generally always provided with truss design documents for building consent purposes.

RFI 3: We do not appear to have received calculations for all Hy90 lintels. Please provide supporting docs/calculations for all lintels outside NZS3604:2011.
RFI 4: We are still waiting for complete DesignIT calcs for all Hy90 lintels.

When responding via email, just select "reply" which will automatically link your reply back to your application and ensure it receives prompt attention.

Please ensure that:
- Drawing amendments are clearly identified and document changes are referenced (e.g revision clouds);
- All attached files are in PDF format and all documents are printable at the correct scale;
- Maximum document size for printing is A3;
- All information is to be supplied within 28 days (or the application may be refused). Please keep us informed if additional time is required.

Your consent application has been temporarily placed on hold while we await this information.

Yours Faithfully,

Sharon Campbell
Contractor
On behalf of: Kaipara District Council

17 June 2021

Rachyl Edge and Regan Randell
104 Te Kowhai Drive
Maungatapere 0179

Dear Sir or Madam,

Request for further information on project information memorandum / building consent application - section 48

Reference Number: 210208.6
Project Location: 8 Sampsons Way
Dargaville
Project Description: Construct 3 Bedroom Dwelling with Attached Garage

Processing of your building consent application in accordance with section 48 of the Act is currently in progress. To enable this work to be completed the following additional information / clarification is required to ensure compliance with the building code is demonstrated:

Main Building

B1: Floor Slab
RFI 1: Structural engineer review: The Hawthorn Geddes geotechnical report states that a waffle foundation slab is not suitable for this site due to ground water encountered at less than 0.6m below ground surface. Please confirm your drainage proposal with the Hawthorn Geddes geotechnical engineer. Provide confirmation that the drainage system proposed would be effective in mitigating the issue with high water table.

RFI 2: A response was received 3 May, which was confirmation of RS Eng design. Comment from Hawthorn Geddes geotechnical engineer is required to confirm that this design is sufficient.

RFI 4: We are still waiting a response to this RFI item.

RFI 5: No further information has been forthcoming regarding the issue regarding the high water table. Please either provide additional information on the drainage system proposed. We consider that a subsoil drain as shown may have insufficient capacity in the case of a rise in water table as this method would typically be used for surface water drainage. Has a piled waffle slab system been considered to prevent the potential settlement issue with high water table?

When responding via email, just select "reply" which will automatically link your reply back to your application and ensure it receives prompt attention.

Please ensure that:
- Drawing amendments are clearly identified and document changes are referenced (e.g revision clouds);
- All attached files are in PDF format and all documents are printable at the correct scale;
- Maximum document size for printing is A3;
- All information is to be supplied within 28 days (or the application may be refused). Please keep us informed if additional time is required.

Your consent application has been temporarily placed on hold while we await this information.

Yours Faithfully,

Sharon Campbell
Contractor
On behalf of: Kaipara District Council

30 June 2021

Rachyl Edge and Regan Randell
104 Te Kowhai Drive
Maungatapere 0179

Dear Sir or Madam,

Request for further information on project information memorandum / building consent application - section 48

Reference Number: 210208.7
Project Location: 8 Sampsons Way
Dargaville
Project Description: Construct 3 Bedroom Dwelling with Attached Garage

Processing of your building consent application in accordance with section 48 of the Act is currently in progress. To enable this work to be completed the following additional information / clarification is required to ensure compliance with the building code is demonstrated:

Main Building

Site Considerations
Please provide the correct site plan as supplied to planning.

When responding via email, just select "reply" which will automatically link your reply back to your application and ensure it receives prompt attention.

Please ensure that:
- Drawing amendments are clearly identified and document changes are referenced (e.g revision clouds);
- All attached files are in PDF format and all documents are printable at the correct scale;
- Maximum document size for printing is A3;
- All information is to be supplied within 28 days (or the application may be refused). Please keep us informed if additional time is required.

Your consent application has been temporarily placed on hold while we await this information.

Yours Faithfully,

Sharon Campbell
Contractor
On behalf of: Kaipara District Council

30 June 2021

Rachyl Edge and Regan Randell
104 Te Kowhai Drive
Maungatapere 0179

Dear Sir or Madam,

Request for further information on project information memorandum / building consent application - section 48

Reference Number: 210208.8
Project Location: 8 Sampsons Way
Dargaville
Project Description: Construct 3 Bedroom Dwelling with Attached Garage

Processing of your building consent application in accordance with section 48 of the Act is currently in progress. To enable this work to be completed the following additional information / clarification is required to ensure compliance with the building code is demonstrated:

Main Building

E1/VM 1: Drainage
RFI 5: Revised site plan now also has revised drainage design with reference to RSEng. Please provide design and details for the dispersal trench. Note, plans do not match Sheet 6 of the plan set.

When responding via email, just select "reply" which will automatically link your reply back to your application and ensure it receives prompt attention.

Please ensure that:
- Drawing amendments are clearly identified and document changes are referenced (e.g revision clouds);
- All attached files are in PDF format and all documents are printable at the correct scale;
- Maximum document size for printing is A3;
- All information is to be supplied within 28 days (or the application may be refused). Please keep us informed if additional time is required.

Your consent application has been temporarily placed on hold while we await this information.

Yours Faithfully,

Sharon Campbell
Contractor
On behalf of: Kaipara District Council

BC210208: RFI Customer Portal Responses

Section 268 - 272: Product Certificates: If the proposal includes a product certificate issued by an accredited product certification body under BA sec. 261; then is the certificate current and the proposal within the scope of the product certificate? Please check MBIE register and record the product Authorization Number; or select N/A if there no certified building methods or products.

RFI 1: Codemark for Masons 40 Below Window tape has been superceded. Please provide current codemark.

[Identified Date: 2021-04-25 15:11:11 | Resolved Date: 2021-04-30 08:36:50]

Discussions:

[2021-04-28 16:36:07] Genna Jones (Customer)

Sorry we canâ€™t modify the online BC application. Please allow to update compliance of B1 to be with VM1/VM4

[2021-04-28 16:37:20] Genna Jones (Customer)

Sorry - the above wasn't the response for this RFI query. As follows:

Please find attached the code mark system for Masons 40 Below which was certified on 8th April 2021

[2021-04-28 16:37:33] Genna Jones (Customer)

Uploaded Document: Masons-40below-hydro-WEB.pdf

Section 45: Consent Documents: Is Form 2 correctly completed and accompanied by the requisite information required by Section 45?

RFI 1: I have identified other methods of compliance specified or used within consent documentation. As you are unable to revise the application form, please confirm these compliance methods are to be included:

B1 - VM1/VM4 (engineering, Truss design).

Please also feel free to advise of any other compliance methods that need to be added to or changed on the application form.

[Identified Date: 2021-04-25 14:49:04 | Resolved Date: 2021-04-30 08:29:08]

Discussions:

[2021-04-28 16:38:04] Genna Jones (Customer)

Sorry we canâ€™t modify the online BC application. Please allow to update compliance of B1 to be with VM1/VM4

B2: DURABILITY: Does the design demonstrate compliance with Functional Requirement - B2.2? Review inspections and add / delete / modify inspection questions as required.

RFI 1:

1.BRANZ appraisal for Gib Aqualine has been superceded. Please provided current appraisal.

2. Please provide manufacturer technical specifications for selected weatherboard.

[Identified Date: 2021-04-26 08:58:07 | Resolved Date: 2021-04-30 09:09:34]

Discussions:

[2021-04-28 16:44:27] Genna Jones (Customer)

Uploaded Document: Branz_Gib_Aqualine_427_2021.pdf

[2021-04-28 16:44:28] Genna Jones (Customer)

Uploaded Document: Linea-Weatherboard-Cavity-Fix-Tech-Spec-May-2020.pdf

Miscellaneous - Other: Please select the cross if you wish to raise an RFI for an item that may not clearly fit into any other category.

Note: Please note, a structural review of foundation design has been requested - there may be further RFI's depending on review.

[Identified Date: 2021-04-26 11:11:14 | Resolved Date: 2021-04-30 08:48:49]

Discussions:

[2021-04-28 16:38:26] Genna Jones (Customer)

Noted

B1: Footings, Foundations (In-situ, masonry, SED): Does the design comply with that of the nominated compliance path and satisfy the requirements for B1 Structure and B2 Durability? Note: Please assess compliance of all footing and foundations (including those of SED elements) under this question.

RFI 1: Please provide a copy of the Firth Ribraft technical manual.

[Identified Date: 2021-04-25 15:42:40 | Resolved Date: 2021-04-30 09:01:44]

Discussions:

[2021-04-28 16:41:53] Genna Jones (Customer)

Uploaded Document: FIR0667-RibRaft-Technical-Manual-2020.pdf

D1: Access Routes - Residential: Does the proposal comply with Functional Requirements D1.2.1 & D1.2.2? (i.e. the buildings have reasonable and adequate access to enable safe and easy access by people; and where loading or parking is provided, these spaces permit safe and easy unloading and movement of vehicles and avoid conflict between vehicles and pedestrians?) Please check limit on applications (LoA) for each question. Add inspections and inspections questions as required. LoA - Requirement D1.2.1 shall not apply to Ancillary buildings or Outbuildings .

RFI 1: Please specify surface for access route compliant with D1/AS1 Table 2 for slip resistance.

[Identified Date: 2021-04-26 09:45:31 | Resolved Date: 2021-04-30 09:13:01]

Discussions:

[2021-04-28 16:44:58] Genna Jones (Customer)

Uploaded Document: 390076_-_EDGE_-_RFI_28-04-21-SHEET_2.pdf

[2021-04-28 16:45:10] Genna Jones (Customer)

Please find attached note referring to the slip coefficiency at the front door to comply with D1/AS1 on sheet 2

F2: Hazardous Building Materials: Does the proposal comply with F2.2 and demonstrate that building materials which are potentially hazardous will be used in ways that avoid undue risk to people? Review inspections and add / delete / modify inspection questions as required.

RFI 1: Please provide specifications for Glazing.

[Identified Date: 2021-04-26 10:37:25 | Resolved Date: 2021-04-30 09:16:24]

Discussions:

[2021-04-28 16:46:12] Genna Jones (Customer)

Refer note 4.0 on elevations which denotes glazing standard and all glazing to be safety glass. Also the glass shower door is also 6mm thick safety glass.

E1: Surface Water: Does the proposal comply with Functional Requirement E1.2 and demonstrate that buildings and site work will be constructed in a way that protects people and other property from the adverse effects of surface water? Review inspections and add / delete / modify inspection questions as required.

RFI 1: Please show subsoil drainage to a sump prior to connection to council SW connection.

[Identified Date: 2021-04-26 09:53:35 | Resolved Date: 2021-04-30 09:14:10]

Discussions:

[2021-04-28 16:45:22] Genna Jones (Customer)

Silt trap added to sheet 6

[2021-04-28 16:45:51] Genna Jones (Customer)

Uploaded Document: 390076_-_EDGE_-_RFI_28-04-21-SHEET_6.pdf

G13: Foul Water: Does the proposal comply with G13.2 and demonstrate that buildings in which sanitary fixtures and sanitary appliances using water-borne waste disposal are installed will be provided with: (a) an adequate plumbing and draining system to carry foul water to appropriate outfalls, and (b) if no sewer is available, an adequate system for the storage, treatment, and disposal of foul water?

RFI 1: Please provide manufacturer technical specification for the E-One pressure sewer system.

[Identified Date: 2021-04-26 11:05:16 | Resolved Date: 2021-04-30 09:36:35]

Discussions:

[2021-04-28 16:46:49] Genna Jones (Customer)

Uploaded Document: Ecoflow-BrochureandSpecs-2017.pdf

G4: Ventilation: Does the proposal comply with Functional Requirement G4.2 and demonstrate that spaces within buildings will be provided with adequate ventilation consistent with their maximum occupancy, and intended use? Record any arrangement for review of system design or shop drawings that may occur after consent is granted.

RFI 1: Please specify mechanical extract ventilation to comply with G4/AS1 1.2.5, ie 25 L/s for showers and baths and 50 L/s for cooktops.

[Identified Date: 2021-04-26 10:46:38 | Resolved Date: 2021-04-30 09:19:59]

Discussions:

[2021-04-28 16:46:26] Genna Jones (Customer)

Please refer Sheet 5 with the required air changes denoted on the plan.

[2021-04-28 16:46:37] Genna Jones (Customer)

Uploaded Document: 390076_-_EDGE_-_RFI_28-04-21-SHEET_5.pdf

Site Considerations: Have the following matters been checked and confirmed to be compliant:

RFI 1: Please confirm liquefaction risk according to known ground conditions.

RFI 2: The report does not cover liquefaction which is standard for geotech reports. I will go to council with your comments that they have previously accepted this report without any need for liquefaction assessment to see if they will accept this on historical basis. If they do require a liquefaction assessment I will let you know.

[Identified Date: 2021-04-25 15:28:04 | Resolved Date: 2021-04-30 13:46:46]

Discussions:

[2021-04-28 16:38:40] Genna Jones (Customer)

Please find attached the Hawthorn Geddes subdivision site suitability report which has been used for the basis of RSEngâ€™s slab design.

[2021-04-28 16:41:39] Genna Jones (Customer)

Building consent has been granted on other sections within this subdivision on the basis of this report. The report was already submitted as part of the application, so it will not allow it to be uploaded again.

B1: Floor Slab: Does floor slab detailing demonstrate compliance with the nominated compliance path and with NZBC B1 & B2?

Note: Please assess compliance of SED floor slab proposals under this question.

RFI 1: Please note on the foundation plan the excavation requirements and hardfill as noted in the geotechnical report.

RFI 2: Hardfill and backfill requires are not the excavation requirements. Please note on the foundation plan as per the geotech report - excavation required down to the hard pan.

[Identified Date: 2021-04-25 15:44:58 | Resolved Date: 2021-05-13 13:24:13]

Discussions:

[2021-04-28 16:42:26] Genna Jones (Customer)

Slab plan denotes the use of 150mm well compacted hardfill, the geotechnical report mentions a maximum of 500mm of fill.

[2021-05-03 13:45:31] Genna Jones (Customer)

Uploaded Document: 390076-Edge-Site_Plan-03-05-21.pdf

[2021-05-03 13:46:16] Genna Jones (Customer)

Note added to site plan for the earthworks contractor to adhere strictly to the Geotech report provided by Hawthorn Geddes.

B1: Walls, Wall bracing, Posts, Beams: Does the design for the wall structure, posts and beams comply with the design solution nominated and with NZBC B1 and B2? Disable the pre-pour inspection for post footings if these are to be poured in conjunction with the floor slab.

RFI 1: Please provide supporting calculations for Lintel and verandah beams design.

RFI 2: Though the truss manufacturer has designed these, we still require the supporting documents for their design. I suggest to contact the truss manufacturer for the supporting documents as they are well aware of what is required and are generally always provided with truss design documents for building consent purposes.

RFI 3: We do not appear to have received calculations for all Hy90 lintels. Please provide supporting docs/calculations for all lintels outside NZS3604:2011.

RFI 4: We are still waiting for complete DesignIT calcs for all Hy90 lintels.

[Identified Date: 2021-04-26 09:15:40 | Resolved Date: 2021-05-31 10:21:10]

Discussions:

[2021-04-28 16:43:55] Genna Jones (Customer)

As per the Truss Design submitted with the application, this included the calculations and PS1

[2021-05-03 13:46:35] Genna Jones (Customer)

Uploaded Document: 334171C1_-_Edge_and_Randell.pdf

[2021-05-03 13:47:04] Genna Jones (Customer)

Frame and Truss have now provided the DesignIT calculation sheet as attached.

[2021-05-07 11:44:52] Sharon Campbell (Council Officer)

Thank you for the revised truss design. The DesignIT calculations only cover a few of the lintels and a beam. Please provide full documentation including all hy90 lintels.

[2021-05-28 09:54:13] Genna Jones (Customer)

Uploaded Document: 334171C1_-_Design_IT_1.pdf

[2021-05-28 09:54:14] Genna Jones (Customer)

Uploaded Document: LVL_substitution_1.pdf

[2021-05-28 09:54:14] Genna Jones (Customer)

Uploaded Document: 334171C1_-_Layout_1.pdf

[2021-05-30 09:19:07] Sharon Campbell (Council Officer)

Hi Genna, there are still no calcs for the hy90 lintels. The truss designer will have these. Please request these from them. This will be the 5th time I have requested these. To avoid the possibility of your consent being refused, please provide the requested information.

B1: Floor Slab: Does floor slab detailing demonstrate compliance with the nominated compliance path and with NZBC B1 & B2?

Note: Please assess compliance of SED floor slab proposals under this question.

RFI 1: Structural engineer review: The Hawthorn Geddes geotechnical report states that a waffle foundation slab is not suitable for this site due to ground water encountered at less than 0.6m below ground surface. Please confirm your drainage proposal with the Hawthorn Geddes geotechnical engineer. Provide confirmation that the drainage system proposed would be effective in mitigating the issue with high water table.

RFI 2: A response was received 3 May, which was confirmation of RS Eng design. Comment from Hawthorn Geddes geotechnical engineer is required to confirm that this design is sufficient.

RFI 4: We are still waiting a response to this RFI item.

RFI 5: No further information has been forthcoming regarding the issue regarding the high water table. Please either provide additional information on the drainage system proposed. We consider that a subsoil drain as shown may have insufficient capacity in the case of a rise in water table as this method would typically be used for surface water drainage. Has a piled waffle slab system been considered to prevent the potential settlement issue with high water table?

[Identified Date: 2021-04-29 21:04:03 | Resolved Date: 2021-06-27 23:18:12]

Discussions:

[2021-05-03 13:44:51] Genna Jones (Customer)

I will send via email, the online portal does not allow to attach the RSeng calculations for the subsoil drain requirements.

[2021-05-14 15:44:00] Genna Jones (Customer)

After communication with Linda (structural engineer peer reviewer) her thoughts are on getting a geotechnical engineer to oversee the design of RSEng subsoil drain solution. This is a new subdivision with approximately 5 newly constructed homes, will this effect any of them as we built another one which didn't require a geotechnical review of the subsoil drain design?

As discussed with Linda, the geotechnical engineer Dean Botica of Hawthorn Geddes who did the original subdivision geotech design, has now passed. How do you see us sorting this RFI and moving forward with this, as we don't want to have to engage an additional engineer and incur further costs for our client?

[2021-05-16 11:27:39] Sharon Campbell (Council Officer)

Hi Genna, you will need to discuss this with the structural reviewing engineer as she has reviewed the design and has deemed what is necessary to prove compliance with the building code. I assume you have her details if you have had communication with her. I have forwarded your phone number to her also.

[2021-05-28 09:52:10] Genna Jones (Customer)

The following is what RS Eng responded with:

Noted that the subdivision report outlines that a waffle foundation slab was not suitable due to elevated groundwater. RS Eng has addressed this issue by installing a drain on top of the hard pan, around the hardfill to remove groundwater from the building area, refer page 3 of calculations. This has been installed on a number of other properties in the area and along with keeping the dwelling elevated has worked effectively. It is not appropriate for Hawthorn Geddes to comment on RS Eng design approach for the dwelling.

[2021-05-30 11:03:32] Sharon Campbell (Council Officer)

I have forwarded your response to the reviewing engineer. Please email your future responses for this question so she can review.

Site Considerations: Have the following matters been checked and confirmed to be compliant:

Please provide the correct site plan as supplied to planning.

[Identified Date: 2021-06-30 09:02:46 | Resolved Date: 2021-06-30 12:06:08]

Discussions:

[2021-06-30 11:28:07] Genna Jones (Customer)

Uploaded Document: 390076_-_EDGE_-_SITE.pdf

Form 5
Building consent - BC210208

Section 51, Building Act 2004

The building

Street address of building:	8 Sampsons Way Dargaville
Legal description of land where building is located:	Lot 8 DP 542244
Building name:	
Location of building within site/block number:	8 Sampsons Way Dargaville
Level/unit number:	0

The owner

Name of owner:	Rachyl Edge and Regan Randell
Contact person:	Rachyl Edge
Mailing address:	104 Te Kowhai Drive Maungatapere 0179
Street address/registered office:	
Phone number:	Landline: 094375666 Mobile:
Daytime:	No information provided
After hours:	No information provided
Facsimile number:	No information provided
Email address:	rachyledge@gmail.com
Website:	No information provided

First point of contact for communications with the building consent authority:
Genna Jones (GJ Gardner); Mailing Address: PO Box 8046
Kensington
Whangarei 0145; Phone: 094375666

Building work

The following building work is authorised by this building consent:
Construct 3 Bedroom Dwelling with Attached Garage

This building consent is issued under section 51 of the Building Act 2004. This building consent does not relieve the owner of the building (or proposed building) of any duty or responsibility under any other Act relating to or affecting the building (or proposed building). This building consent also does not permit the construction, alteration, demolition, or removal of the building (or proposed building) if that construction,

alteration, demolition, or removal would be in breach of any other Act.

Conditions

This building consent is subject to the following conditions:

Section 90 - Inspections by Building Consent Authorities: (1) Every building consent is subject to the condition that agents authorised by the building consent authority for the purposes of this section are entitled, at all times during normal working hours or while building work is being done, to inspect-
(a) land on which building work is being or is proposed to be carried out; and
(b) building work that has been or is being carried out on or off the building site; and
(c) any building.

(2) The provisions (if any) that are endorsed on a building consent in relation to inspection during the carrying out of building work must be taken to include the provisions of this section.

(3) In this section, inspection means the taking of all reasonable steps to ensure that building work is being carried out in accordance with a building consent.

Electrical Energy Works Certificate as per section 92 (4)

Ground bearing to be confirmed by a Geotechnical engineer
A CPEng engineer to confirm slab construction and perimeter subsoil drainage in accordance with SED and consent documenation.

NOTE: The required PS4 and Specialist documentation are in support of the required Council Inspections Specified on the Form 5.
These do not negate the requirements for the Council Inspections but are additional to them.

Construction monitoring requirements
Please contact the following consultants directly to arrange the construction monitoring identified which they have been engaged to carry out.

- RS Eng Ltd: Foundations, Ribraft slab, including installation of perimeter subsoil drain- PS4.
- Chartered Geotechnical engineer: Building platform observation and Producer Statement Construction review - PS4

Copies of all site reports/records must be provided to the Building Consent Authority as work proceeds for

their records, please forward these to buildingsupport@kaipara.govt.nz referencing the building consent number.

Inspections

The following inspections are required:

- Siting and Site Scrape Inspection
- Wastepipes
- Framing / Pre-wrap
- Deck / Roof membrane
- Preline
- Drainage
- Prepour
- Floor Slab
- Post Wrap / Cavity
- Half High Brick
- Post Line
- Final

Documents required

Prepour

- B1: Foundations - Construction Monitoring Records PS4 - CPEng To Inspect Foundations Prior To Concrete Pour.

Floor Slab

- B1: Slab And Perimeter Subsoil Drainage - Construction Monitoring Records PS4

Drainage

- E1: Stormwater Drain As-built Plans
- G13: As-builts Drainlayer Details.

Final

- B1: Truss certification
- G9: Energy works certificate

Compliance schedule

A compliance schedule is not required for the building.

Attachments

Copies of the following documents are attached to this building consent:

- Advice notes
- Project Information Memorandum (PIM): BC210208
- Form 4: Certificate attached to PIM - **Issues resolved on 15 Jun 2021**

Signature: Sharon Campbell
Position: Contractor
On behalf of: Kaipara District Council
Issue Date: 02 July 2021

Advice notes

Section 92 (2A) - Code Compliance Certificate Application - Restricted Building Work: An application for Code Compliance Certificate is required to be applied for within 24 months of the Building Consent issued date, please complete this within the AlphaOne system.
As the building work involves restricted building work, all licensed building practitioners who carry out or supervise restricted building work under this consent must on completion of the work provide the Owner and the Territorial Authority (Kaipara District Council) with a record of work, in the prescribed form (Form 6A), detailing what restricted building work has been carried out or supervised.
In accordance with S92 of the Building Act records of work must be included with the application for Code Compliance Certificate.

The records of building work may be submitted via the customer portal as follows:
Sign in;
Search for the appropriate project in My Applications;
Go to the Action menu by the application progress bar and select Upload Documents;
On the Miscellaneous document select attach file and upload your document.

Site Safety: Please ensure all appropriate site safety measures are provided throughout the contract works to comply with NZ Building Code Clause F5 and all occupational safety and health requirements.

Electrical Energy Works Certificate: The Building Consent Authority places full reliance of the issue of energy work certificates to verify that the installation and completion of electrical services comply with the provisions of New Zealand Building Code Clauses G9. Code compliance certificate will not be issued unless the energy works certificates identifies compliance with this specific code clause and confirms compliance with this building consent.

As-Built Truss Layout - An 'as built' truss layout, showing truss and top plate connectors, along with design verification data and lintel sizes outside the scope of NZS 3604 must be available on site at the Prewrap Inspection for the Building Consent Authority officer to collect to facilitate the inspection and retain for record purposes.
Waterproofing System Verification - As most internal water proofing systems rely on installation of multiple coats the Building Consent Authority will not undertake inspection of these. Verification will be required from the installer of the internal tanking systems to certify that the system has been installed in accordance with the building consent and manufacturer specifications.
KDC AN40.1.1 - **Smoke alarms:** Compliant and operating smoke alarms with hush facility shall be installed within 3 metres of every bedroom and on every level of the dwelling and will be checked at the time of final inspection.
KDC AN45 - **Building Platform -** A PS4 - Construction review by a Chartered Professional Geotechnical engineer is required for building platform observation.
Construction Review - A PS4 - Construction review by a CPEng is required for review fo foundations,

perimeter subsoil drainage and SED Ribraft slab.

ADDENDA TO THIS BUILDING CONSENT:

1. This building consent will lapse and be of no effect if the building work to which it relates does not commence within 12 months after the date of issue. The consent may be extended for any further period at the discretion of council.

2. No deviation or alteration from the original plans and specifications can be carried out without written approval of Council and no building may be converted to any other use other than that stated on the building consent.

3. IMPORTANT: YOU ARE FULLY RESPONSIBLE FOR ANY DAMAGE DONE TO ANY WORKS SUCH AS TELEPHONE CABLES, POWER CABLES, WATER MAINS, GAS MAINS, SEWERS, PIPES, FOOTPATHS, ROADS OR OTHER SERVICES.

4. As the property owner is responsible for the correct siting of all works in accordance with the NZ Building Code and the Resource Management Act, the owner must ascertain the true position of the survey pegs before work commences.

5. NOTICE THAT BUILDING WORK IS READY FOR INSPECTION. For the purposes of Section 222 of the Building Act 2004, and unless otherwise provided by the building consent, the owner or other person undertaking any building work shall give at least 2 working days notice of the covering up of any
   i) drainage or plumbing
   ii) excavation for a foundation
   iii) reinforcing steel for a foundation
   iv) timber required to have a specific moisture content
   v) other work required to give notice as a condition

6. Council MUST be notified at the completion of building work on the attached form.

BUILDING CONSENT FEES:

Please note that further fees may be required to be paid before a Code Compliance Certificate is issued for this Building Consent. All fees must be paid before a Code Compliance Certificate will be issued.

Project information memorandum

Section 34, Building Act 2004

Application

Owner:	Rachyl Edge and Regan Randell C/- GJ Gardner PO Box 8046 Kensington Whangarei 0145
Issue Date:	05 May 2021

Project

Description:	Construct 3 Bedroom Dwelling with Attached Garage
Intended use:	2.0 Housing: 2.0.2 Detached Dwelling
Location:	8 Sampsons Way Dargaville
Legal description:	Lot 8 DP 542244
Valuation number:	0095000208

Please Note: This is not an approval to start building work. Please ensure your Building Consent is issued prior to commencing any work. Upon receiving your building consent please check carefully and ensure that compliance with any Conditions, District Planning restrictions or Resource Consent conditions are satisfied. The information below should be read with the understanding that should changes be made at building consent stage then this may alter the requirements listed below.

This project information memorandum does NOT constitute a building consent.

Heritage status of the building

Building work associated with this project will not be affecting land or structures that have heritage status. This project is exempt from the rules of the district plan that relate to heritage buildings.

Notable trees

Council is not aware of there being any notable trees associated with this site. Therefore the project is exempt from the rules of the District Plan that relate to Notable Trees.

Special features of the land concerned

There are no known special features of the land concerned - this includes potential natural hazards, or the likely presence of hazardous contaminants that is likely to be relevant to the design and construction or alteration of the building or proposed buildings; and that is known to the Territorial Authority; and that is not apparent from the district plan under the Resource Management Act 1991.

"Land concerned" means the land on which the proposed building work is to be carried out; and includes any

other land likely to affect or be affected by the building work.

"Special feature of the land concerned" includes, without limitation, potential natural hazards, or the likely presence of hazardous contaminants, that -
a) are likely to be relevant to the design and construction or alteration of the building or proposed building; and
b) is known to the Territorial Authority; and
c) is not apparent from the District Plan under the Resource Management Act 1991.

Details of existing stormwater or wastewater systems relating to proposed building work
There are existing storm water services available on, or adjacent to, the site of the proposed building work.

There are existing wastewater utility services available on, or adjacent to, the site of the proposed building work.

Other information
Once a Building Consent is issued, the Council will follow up on building work not completed within two years of building consent issue.

A Building Consent lapses and is of no effect if the building work has not been started within 12 months of the date of issue.

If the building is public premises it may not be occupied until either a Code Compliance Certificate or Certificate for Public Use has been issued.

If the building is wholly or partly a dam, a Project Information Memorandum and Building Consent must be obtained from the regional authority.

The Northland Regional Council has a register of contaminated sites. Please contact them on 0800 002 004 if you suspect that your property may be contaminated e.g. historic timber treatment sites, service stations, landfill sites.

Please check your Certificate of Title for any encumbrances (such as easements, section 73 notice) before you make an application for a Building Consent.

All archaeological sites are protected under the provisions of the Historic Places Act 1993. If subsurface archaeological evidence (shell, midden, hangi, storage pits, etc) should be unearthed during construction, work should cease in the immediate vicinity of the remains and the Historic Places Trust should be contacted.

The proposed project does not comply with the District Plan zoning as it does not meet the Residential Zone Rules. Please see the attached Form 4.

Consent Notice:11765180.3
Please be advised there are consent notices registered against this property. A breach of these conditions may result in legal action.

Council's desktop assessment has found that the site wind zone rating is high

The Council has found that the site exposure zone is zone C - Inland

Development Contributions do not apply to this project.

The proposed vehicle access (gradient / width / length) needs to comply with the requirements of the District Plan / Council's Engineering Standards. Attached if required, for your use, is a copy of the crossing application form.

ATTACHMENTS:
-Form 4
-Consent Notices
-Vehicle Crossing application form
-GIS map of property and utilities

Notes:
1. The information supplied in the sections of this project information memorandum is specific to the building project to which the application relates by reference to Council files and records. No property inspection, or title search, has been undertaken. To enable the Council to measure the accuracy of this document based on our current records we would appreciate your response should you find any information contained herein which may be considered to be incorrect or omitted. Please telephone the Council (09) 439 3123.

2. The Council has used its best endeavors to ensure that all information provided in this project information memorandum is correct and complete in all material respects. In the event that a material error or omission can be proven the Council's liability, whether in contract or in tort shall be limited to the fee paid to Council to obtain this report.

3. This information reflects the Kaipara District Council's current understanding of information which is relevant to the project. This is based only on the information thus far provided to it and held on record. As a result the Council is not in a position to warrant that the information is complete or without error and accepts no liability for any inaccuracy in, or omission from, this information.

4. The information contained in this project information memorandum is current at the date the memorandum is issued. Further relevant information may come into the Council's possession subsequent to the date of issue.

Form 4
Certificate attached to Project Information Memorandum

Section 37, Building Act 2004

RE: BC210208, Rachyl Edge and Regan Randell, 8 Sampsons Way
Dargaville

Restrictions on commencing building work under the Resource Management Act 1991

The building work referred to in the attached project information memorandum or building consent is also required to have the following resource consents under the Resource Management Act 1991:

13.10.01a - Excavation and Fill:
Please demonstrate compliance with this rule by providing compliant earthwork volumes

13.10.25 - Vehicle Access and Driveways:
1. Control of reversing provisions will not comply and will therefore be classed as a Restricted Discretionary Activity so resource consent will be required to be obtained before this activity can occur.

13.10.27 - Parking:
1. Control of reversing provisions will not comply and will therefore be classed as a Restricted Discretionary Activity so resource consent will be required to be obtained before this activity can occur.

Resource consents will or may materially affect the building work to which the attached project information memorandum relates. Until resource consent has been granted, building work may not proceed.

Failure to comply with the requirements of this notice may result in legal action being taken against you under the Resource Management Act 1991.

Matthew Bayly
Planning Team
On behalf of: Kaipara District Council
Issue Date: 23 April 2021

210208-Assets

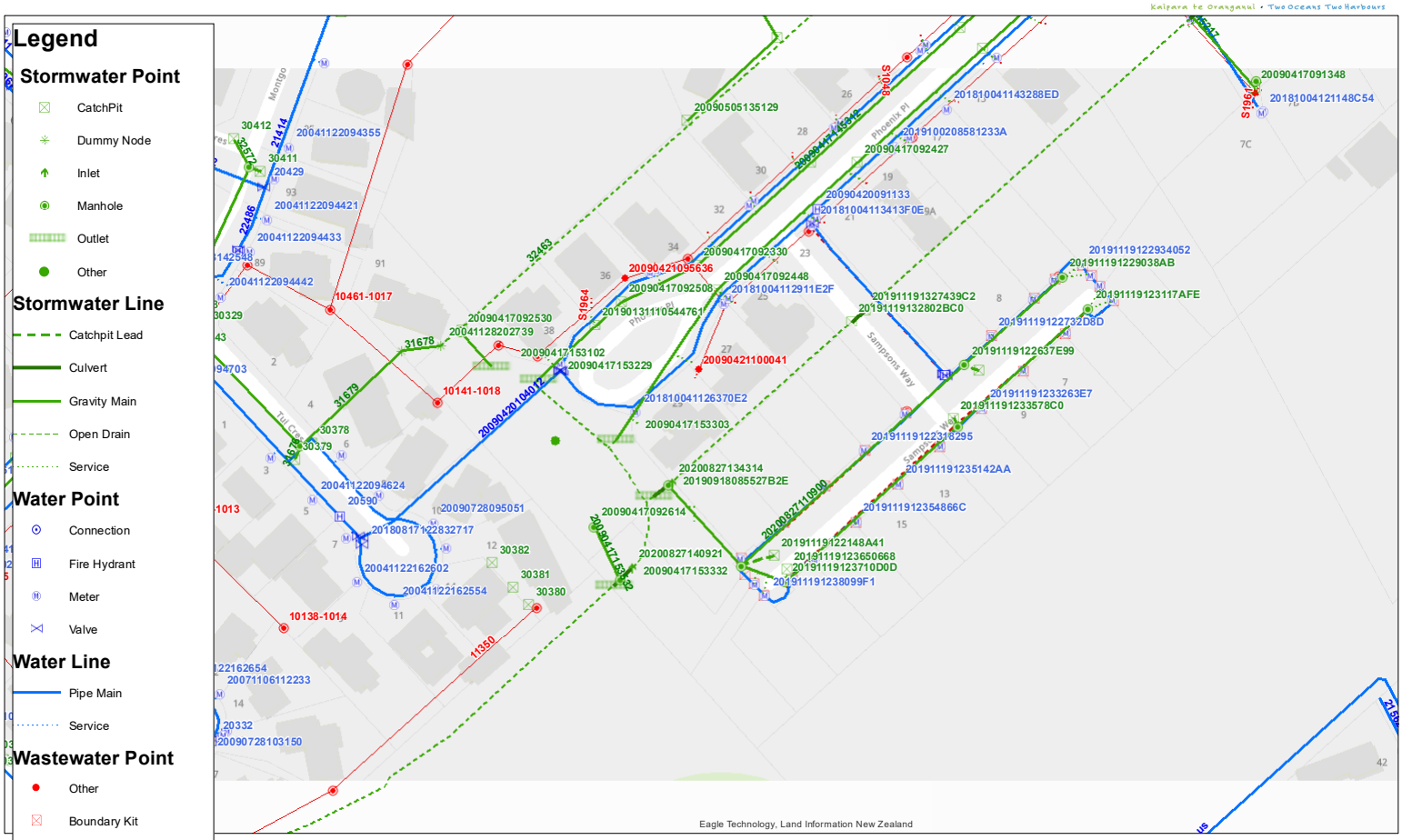

Scale: 1:1,128

Original Sheet Size: A3

Projection: NZGD 2000 New Zealand Transverse Mercator

Bounds: 1,677,889.8839 6,023,670.8454
1,678,347.6013 6,023,402.3557

The information provided is an indication only and needs to be validated in the field. Kaipara District Council accepts no responsibility for errors or omissions for loss or damage resulting from the reliance or use of this information. Cadastral information is derived from LINZ's Digital Cadastral Record System (CRS) CROWN COPYRIGHT RESERVED.

RECORD OF TITLE
UNDER LAND TRANSFER ACT 2017
FREEHOLD

Search Copy

R.W. Muir
Registrar-General
of Land

Identifier **912640**
Land Registration District **North Auckland**
Date Issued 05 June 2020

Prior References
NA62D/391

Estate Fee Simple
Area 619 square metres more or less
Legal Description Lot 8 Deposited Plan 542244
Registered Owners
Regan John Randell and Rachyl Irene Edge

Interests

11765180.3 Consent Notice pursuant to Section 221 Resource Management Act 1991 - 5.6.2020 at 12:20 pm

Land Covenant in Covenant Instrument 11765180.4 - 5.6.2020 at 12:20 pm

Appurtenant hereto is a right of way, a right to convey electricity, telecommunications and water and a right to drain water and sewage created by Easement Instrument 11765180.7 - 5.6.2020 at 12:20 pm

The easements created by Easement Instrument 11765180.7 are subject to Section 243 (a) Resource Management Act 1991

11959861.2 Mortgage to ASB Bank Limited - 21.12.2020 at 1:26 pm

Identifier **912640**

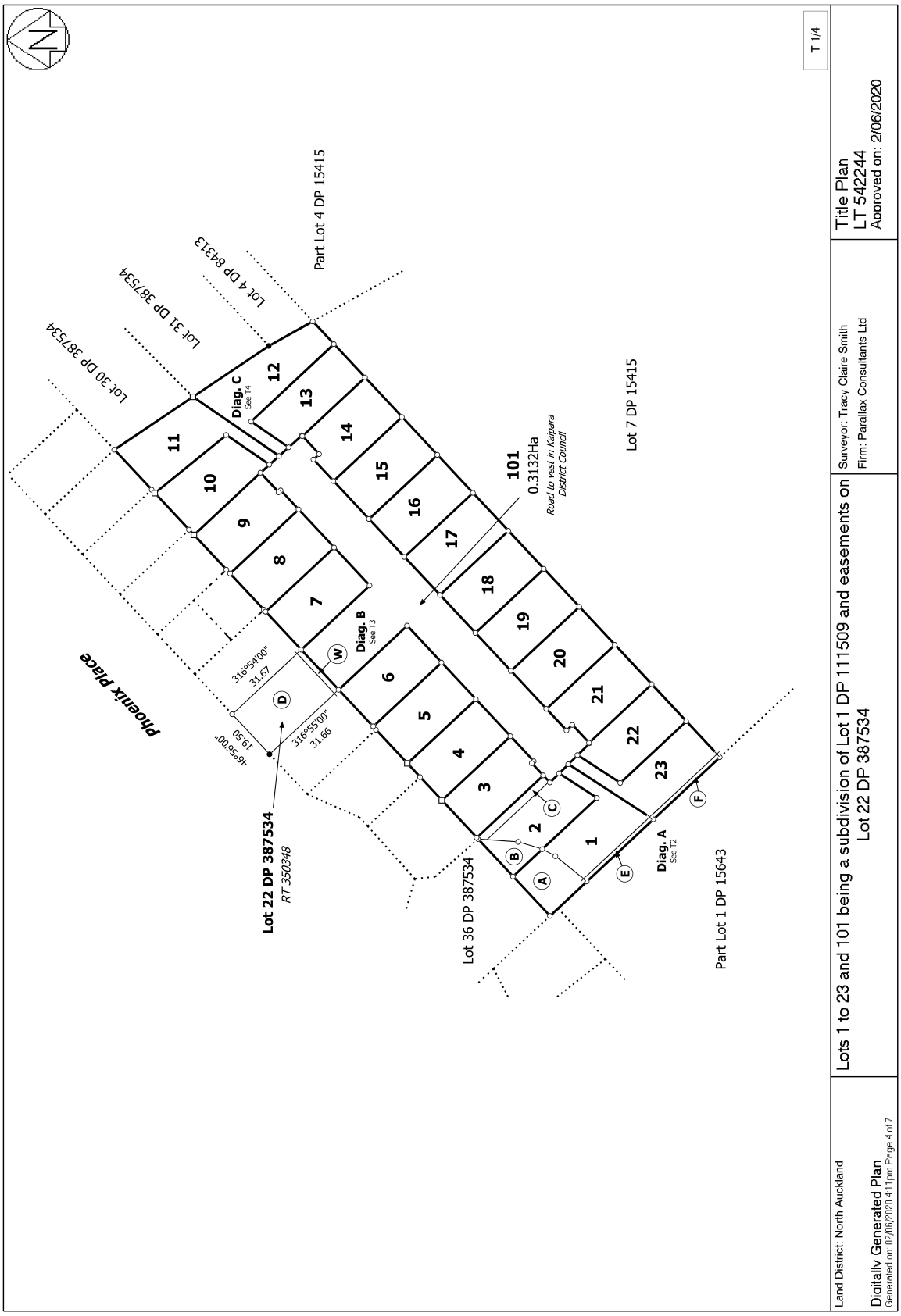

Identifier **912640**

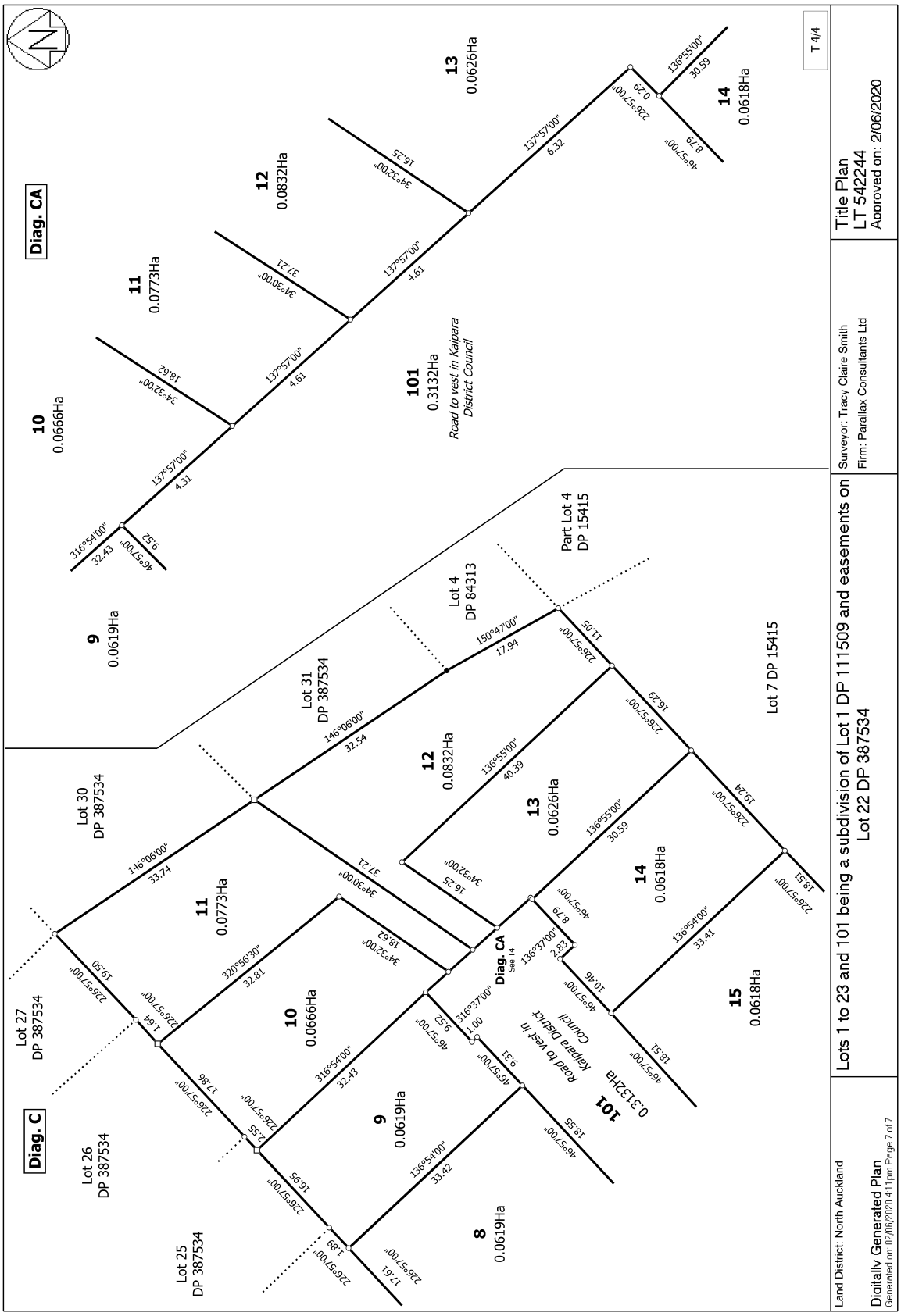

Landonline

View Instrument Details

Toitu te Land whenua Information New Zealand

Instrument No.	11765180.3
Status	Registered
Date & Time Lodged	05 Jun 2020 12:20
Lodged By	Dempster, Vicki Marie
Instrument Type	Consent Notice under s221(4)(a) Resource Management Act 1991

Affected Records of Title	Land District
912633	North Auckland
912634	North Auckland
912635	North Auckland
912636	North Auckland
912637	North Auckland
912638	North Auckland
912639	North Auckland
912640	North Auckland
912641	North Auckland
912642	North Auckland
912643	North Auckland
912644	North Auckland
912645	North Auckland
912646	North Auckland
912647	North Auckland
912648	North Auckland
912649	North Auckland
912650	North Auckland
912651	North Auckland
912652	North Auckland
912653	North Auckland
912654	North Auckland
912655	North Auckland

Annexure Schedule Contains 3 Pages.

Signature

Signed by Vicki Marie Dempster as Territorial Authority Representative on 04/06/2020 09:57 AM

***** End of Report *****

© Copyright: Land Information New Zealand

IN THE MATTER of the Resource Management Act 1991 ("**Act**")

AND

IN THE MATTER of the subdivision of land shown in Deposited Plan 542244 (North Auckland Registry) ("**Plan**")

CONSENT NOTICE
(Section 221 of the Act)

KAIPARA DISTRICT COUNCIL ("**Council**") being the territorial authority of the district within which the land described in the First Schedule below ("**Land**") is located has consented to the subdivision of the Land as shown in the Plan subject to the conditions of the Second Schedule below to be complied with on a continuing basis by the Owner (as defined in the Act).

FIRST SCHEDULE
(Land)

ALL the land being Lot 22 Deposited Plan 387534 comprised in Identifier 350348 and Lot 1 Deposited Plan 111609 comprised in Identifier NA62D/391.

SECOND SCHEDULE
(Conditions)

The Owner (as defined in the Act) must, on a continuing basis, to the satisfaction of the Council, comply with the following conditions of the Council's Subdivision Consent RM180003A, namely:

1. In respect of all lots 1 to 23 (inclusive) on the Plan:

1.1 Earthworks, the location of buildings, building foundations and storm water to be subject to specific engineering design by a suitably qualified Chartered Professional Engineer having regard to any soil instability/saturation issues that may exist or arise as a result of the development. Design should take into account any of the recommendations identified in the Geotechnical Investigation and Engineering Report (Reference 11546), dated 27 August 2018, prepared by Hawthorn Geddes.

1.2 Each lot will require specific foundation design at Building Consent stage to ensure that future dwellings are designed and constructed with due accordance paid to the highly sensitive nature of the sub soils present on the site.

1.3 No vehicle crossing(s) is provided to the lots. All lots must form a complying vehicle crossing consistent with the Kaipara District Council Engineering Standard 2011 at the time of the construction of a dwelling. Prior to commencement of any construction work, in relation to vehicle crossings, the owner(s) shall have a vehicle crossing permit for each lot and shall enter into a Bond in a form to the approval of Council guaranteeing that in the event of damage to existing Council assets or abandonment of the work by the consent holder, that all existing Council assets will be returned to a condition at least equal to that which existed prior to the commencement of work. The bond shall be for the sum of $5,000 and shall remain in full force and effect until such time as all work has been completed and any necessary remedial work completed to the satisfaction of Council

2. In respect of Lots 1 and 12 to 23 (inclusive) on the Plan (each a "Lot"):

2.1 The owner(s) shall not and nor shall any occupier of or visitor to the Lot make, and surrenders the right to make, a complaint to the relevant consent authority or the Environment Court, as to any reverse sensitivity effects, including any emission of noise, vibration or any effect associated with any activity which is expressly allowed by a rule in a regional or District Plan, a resource consent, a designation, or regulations made under the Resource Management Act 1991 ('RMA') and shall not seek that a declaration or enforcement order be made by the Environment Court under sections 311 or 316 of the RMA, nor seek that an abatement or infringement notice be served by a duly authorised enforcement officer under sections 322 or 343C of the RMA, or that criminal proceedings be commenced in the District Court by the relevant consent authority under section 338 of the RMA in respect of any lawful activity carried out by the Dargaville High School; (Lot 7 DP 15415; Lot 1 DP 28811; Lot 4 DP 36061; PT Lot 13 DP 14511; PT Lot 8 DP 15415; PT Lot 1 DP 1 5643).

2.2 The owner of a Lot shall not be a party to, finance or contribute to the costs of any complaint, application for other proceedings or process specified in condition 2.1 above.

2.3 Any future dwelling shall have double glazing on all habitable room windows located on the south eastern and south western sides of the dwelling (the sides of the dwelling facing the

Dargaville High School property, being Lot 7 DP 15415; Lot 1 DP 28611; Lot 4 DP 36061; PT Lot 13 DP 14511; PT Lot 8 DP 15415; PT Lot 1 DP 1 5643).

2.4 Screening shall be undertaken that consists of a 1.8m high solid fence or a minimum 1.8m high planting, of no less than 1 metre depth along the west and south eastern boundary bordering the Dargaville High School property (being Lot 7 DP 15415; Lot 1 DP 28611; Lot 4 DP 36061; PT Lot 13 DP 14511; PT Lot 8 DP 15415; PT Lot 1 DP 1 5643).

DATED the 5th day of May 2020

SIGNED by the Council
by its authorised signatory

Dina Tetzner

View Instrument Details

Instrument No.	11765180.4
Status	Registered
Date & Time Lodged	05 Jun 2020 12:20
Lodged By	Dempster, Vicki Marie
Instrument Type	Land Covenant under s116(1)(a) or (b) Land Transfer Act 2017

Affected Records of Title	Land District
912633	North Auckland
912634	North Auckland
912635	North Auckland
912636	North Auckland
912637	North Auckland
912638	North Auckland
912639	North Auckland
912640	North Auckland
912641	North Auckland
912642	North Auckland
912643	North Auckland
912644	North Auckland
912645	North Auckland
912646	North Auckland
912647	North Auckland
912648	North Auckland
912649	North Auckland
912650	North Auckland
912651	North Auckland
912652	North Auckland
912653	North Auckland
912654	North Auckland
912655	North Auckland

Annexure Schedule Contains 6 Pages.

Covenantor Certifications

I certify that I have the authority to act for the Covenantor and that the party has the legal capacity to authorise me to lodge this instrument ☑

I certify that I have taken reasonable steps to confirm the identity of the person who gave me authority to lodge this instrument ☑

I certify that any statutory provisions specified by the Registrar for this class of instrument have been complied with or do not apply ☑

I certify that I hold evidence showing the truth of the certifications I have given and will retain that evidence for the prescribed period ☑

Signature

Signed by Vicki Marie Dempster as Covenantor Representative on 04/06/2020 09:42 AM

Covenantee Certifications

I certify that I have the authority to act for the Covenantee and that the party has the legal capacity to authorise me to lodge this instrument ☑

© Copyright: Land Information New Zealand

I certify that I have taken reasonable steps to confirm the identity of the person who gave me authority to lodge this instrument ☑

I certify that any statutory provisions specified by the Registrar for this class of instrument have been complied with or do not apply ☑

I certify that I hold evidence showing the truth of the certifications I have given and will retain that evidence for the prescribed period ☑

Signature

Signed by Vicki Marie Dempster as Covenantee Representative on 04/06/2020 09:42 AM

***** End of Report *****

KAIPARA DISTRICT

Kaipara te Oranganui • Two Oceans Two Harbours

Vehicle Crossing Permit Application

KAIPARA DISTRICT COUNCIL

Application No .....

Resource Consent No .....
(only required if current RC exists of which a VC permit is a part of)

Applicants Details

Owner's Name .....

Postal Address .....

Contact Telephone No .....Email .....

Agent Name .....

Postal Address .....

Contact Telephone No .....Email .....

Send permit to: ☐ Owner ☐ Agent

Site Location

Street/Rapid No ..... Road Name .....

Town or Locality .....

Legal Description ..... Valuation No .....

Contractor/Traffic Management Plan Details

Please Note: ***Application will not be accepted by Council if a Plan is not attached for the location of your vehicle access. If constructing a vehicle crossing, your application will be rejected if a Traffic Management Plan is not attached.***

Name of person/firm constructing the crossing .....

Person in Charge of Traffic Management .....

Postal Address .....

Contact Telephone No .....Email .....

Crossing Information Required

Location:

Adjacent Road is: .....

☐ Urban (S05) ☐ Rural (S06)

☐ Sealed with kerb and channel ☐ Sealed with no kerb and channel ☐ Metalled

Intended Use

☐ Residential ☐ Commercial ☐ Other *(please specify)*.....

KAIPARA DISTRICT
Kaipara te Oranganui • Two Oceans Two Harbours

Vehicle Crossing Permit Application

KAIPARA DISTRICT COUNCIL

SITE LOCALITY PLAN

Map Showing Location of Vehicle Crossing	**Please show the following:** • Roads • Property boundaries • Location of entranceway – including **distances** from boundaries and adjacent numbered property entrances • Other identifiable land marks, buildings etc.
Property Description:	
Road Name:	

The Application Fee must be paid before permit the can be processed.
If the applicant has a current resource consent of which the Vehicle Crossing is a part of the fee to be charged is $345.00, an additional inspection fee will be charged as part of the consent application. For all other applications the fee is $485.00 which includes the pre and post approval inspections.

NB: A further $150.00 will be charged if an additional inspection is required.

Signed by Owner/Agent: …… Date: ..... ……

Office Use Only

Receipt No: ..... Date: .....

RCA consent (eg CAR/WAP) and/or RCA contract reference	

TRAFFIC MANAGEMENT PLAN (TMP) – SHORT FORM

*Complete **short form** if simple activity and RCA permits. Refer to the NZ Transport Agency's Traffic control devices manual, part 8 Code of practice for temporary traffic management (CoPTTM), section E, appendix A for a guide on how to complete each field.*

Organisations/ TMP reference	TMP reference:	Contractor:	Principal ***(Client)*:**			
			RCA:			
Location details and road characteristics	Road names and suburb		House no. / RPs ***(From and to)***	Road level	Permanent speed	AADT/Peak flows
Description of work activity						

Planned work programme

Start date		Time		End date		Time	
Consider significant stages, **for example:** • **road closures** • **detours** • **no activity periods.**							
Alternative dates if activity delayed							

Road aspects affected ***(delete either Yes or No to show which aspects are affected)***

Pedestrians affected?	**Yes No**	Property access affected?	**Yes No**	Traffic lanes affected?	**Yes No**
Cyclists affected?	**Yes No**	Restricted parking affected?	**Yes No**	Delays or queuing likely?	**Yes No**

TSL/ Diagram ***(see TSL decision matrix for guidance)***	TSL details as required **Approval of Temporary Speed Limits (TSL) are in terms of Section 5 of Land Transport Rule: Setting of Speed Limits 2003,Rule 54001** ***(List speed, length and location)***	Times ***(From and to)***	Dates ***(Start and finish)***	Diagram ref. no's ***(Layout drawings or TMDs)***
Attended day/ night	**A temporary maximum speed limit of km/h is hereby fixed for motor vehicles travelling over the length of m situated between (House no./RP) and (House no./RP) on (street or road name)**			
Unattended day/ night	**A temporary maximum speed limit of km/h is hereby fixed for motor vehicles travelling over the length of m situated between (House no./RP) and (House no./RP) on (street or road name)**			

RCA consent (eg CAR/WAP) and/or RCA contract reference	

Contingency plan		
If long queues form or delays exceed 5mins *(or any other period required by RCA),* site to be disestablished or additional lanes made available.	**Adjust TMD to suit unforeseen circumstances *(eg weather or site overlaps with another work site)*.**	**Emergency services will be accommodated and access provided through the site as required.**
Add additional contingencies:		

Contact details

	Name	24/7 contact number	CoPTTM ID	Qualification	Expiry date
Principal					
TMC					
Engineers' representative					
Contractor					
STMS					
TC					
Others as required					

TMP preparation (or approval if STMS delegated authority to approve TMPs)

Delete the option that does not apply (either prepared or approved)

Prepared / Approved						
	Name	**Date**	***Signature***	***ID no.***	***Qualification***	***Expiry date***

This TMP meets CoPTTM requirements	Number of diagrams attached					
TMP returned for correction						
	Name	**Date**	***Signature***	***ID no.***	***Qualification***	***Expiry date***

Engineer/TMC to complete following section when approval or acceptance required

Approved by TMC or engineer ***(delete one)***						
	Name	**Date**	***Signature***	***ID no.***	***Qualification***	***Expiry date***
Acceptance by TMC ***(if required)***						
	Name	**Date**	***Signature***	***ID no.***	***Qualification***	***Expiry date***

Qualifier for engineer or TMC approval

RCA consent (eg CAR/WAP) and/or RCA contract reference	

Approval of this TMP authorises the use of any regulatory signs included in the TMP or attached traffic management diagrams.

This TMP is approved on the following basis:

1. To the best of the approving engineer's/TMC's judgment this TMP conforms to the requirements of CoPTTM.

2. This plan is approved on the basis that the activity, the location and the road environment have been correctly represented by the applicant. Any inaccuracy in the portrayal of this information is the responsibility of the applicant.

3. The STMS for the activity is reminded that it is the STMS's duty to postpone, cancel or modify operations due to the adverse traffic, weather or other conditions that affect the safety of this site.

KDC - Approved Building Consent Document - BC210208 - Pg 1 of 197 - 2/07/2021 - ComplyNZ

BRANZ Appraised

Appraisal No. 812 [2019]

SIKALASTIC-152 AND SIKALASTIC-220W INTERIOR WATERPROOFING MEMBRANES

Appraisal No. 812 (2019)

This Appraisal replaces BRANZ Appraisal No. 812 (2013).

BRANZ Appraisals

Technical Assessments of products for building and construction.

Sika (NZ) Ltd
PO Box 19 192
Avondale
Auckland 1746
Tel: 0800 SIKA NZ
Fax: 0800 SIKA FAX
Web: www.sika.co.nz

BRANZ
1222 Moonshine Rd,
RD 1, Porirua 5381
Private Bag 50 908
Porirua 5240,
New Zealand
Tel: 04 237 1170
branz.co.nz

Product

1.1 Sikalastic-152 and Sikalastic-220W Waterproofing Membranes are two and single part waterproofing membranes for use under ceramic or stone tile finishes in internal wet areas.

Scope

2.1 Sikalastic–152 and Sikalastic-220W Waterproofing Membranes have been appraised for use as waterproofing membranes for internal wet areas of buildings, within the following scope:

- on floor substrates of concrete, flooring grade particleboard, plywood, compressed fibre cement sheet and fibre cement sheet tile underlay, and on wall substrates of concrete, concrete masonry, wet area fibre cement sheet lining systems and wet area plasterboard lining systems; and,
- when protected from physical damage by ceramic or stone tile finishes; and,
- where floors are designed and constructed such that deflections do not exceed 1/360th of the span.

2.2 The use of Sikalastic-152 and Sikalastic-220W Waterproofing Membranes on concrete slabs where hydrostatic or vapour pressure is present from below is outside the scope of this Appraisal.

2.3 Movement and control joints in the substrate must be carried through to the tile finish. The design and construction of the substrate and movement and control joints is specific to each building, and therefore the responsibility of the building designer and building contractor and is outside the scope of this Appraisal.

2.4 The ceramic or stone tile finishes are outside the scope of this Appraisal.

2.5 The membranes must be installed by trained installers, approved by Sika (NZ) Ltd.

Readers are advised to check the validity of this Appraisal by referring to the Valid Appraisals listing on the BRANZ website, or by contacting BRANZ.

KDC - Approved Building Consent Document - BC210208 - Pg 2 of 197 - 2/07/2021 - ComplyNZ

Building Regulations

New Zealand Building Code (NZBC)

3.1 In the opinion of BRANZ, Sikalastic-152 and Sikalastic-220W Interior Waterproofing Membranes if designed, used, installed and maintained in accordance with the statements and conditions of this Appraisal, will meet the following provisions of the NZBC:

Clause B2 DURABILITY: Performance B2.3.1 (b) 15 years. Sikalastic-152 and Sikalastic-220W Waterproofing Membranes meet this requirement. See Paragraph 9.1.

Clause E3 INTERNAL MOISTURE: Performance E3.3.6. Interior wet area floors and walls incorporating Sikalastic-152 and Sikalastic-220W Waterproofing Membranes will meet this requirement. See Paragraphs 11.1- 11.6.

Clause F2 HAZARDOUS BUILDING MATERIALS: Performance F2.3.1. Sikalastic-152 and Sikalastic-220W Waterproofing Membranes meet this requirement and will not present a health hazard to people.

Technical Specification

4.1 Materials supplied by Sika (NZ) Ltd are as follows:

- **Sikalastic-152** is a two component, fibre reinforced mortar based on cement modified polymers. It has a very low elastic modulus and is designed to be used to waterproof substrates that are to be covered by tiles or stones finishes. It is supplied as an 8 kg Part A liquid and a 25 kg Part B powder, with a final mixed colour of grey.
- **Sikalastic-220W** is a single component, ready to use, solvent free, liquid waterproofing membrane suitable for interior waterproofing application. It is supplied as a blue grey colour in 7 or 16 kg buckets.
- **SikaPrimer-11W** is a water based primer for cement based substrates, plaster and plasterboard. It is a red liquid supplied in a 5 kg bottle can.
- **SikaPrimer-21W** is an epoxy based primer for non porous substrates. It is a light blue liquid and supplied in a 5 kg bottle can.
- **SikaSeal Tape-S** is a reinforcement tape with a woven bonding mesh and an expansion zone the middle to be used to reinforce all changes of direction. It comes as performed corners, wall flashings, floor flashings and rolls. It is 0.60 mm thick and coloured yellow/white.

Handling and Storage

5.1 All materials must be stored inside, up off concrete floors, in dry conditions, out of direct sunlight and out of freezing conditions. The membrane products have a shelf life of 12 months from date of manufacture in the original unopened packaging. Once opened, the products must be used within 3 months.

Technical Literature

6.1 Refer to the Appraisals listing on the BRANZ website for details of the current Technical Literature for the Sikalastic-152 and Sikalastic-220W Waterproofing Membranes. The Technical Literature must be read in conjunction with this Appraisal. All aspects of design, use, installation and maintenance contained in the Technical Literature and within the scope of this Appraisal must be followed.

Readers are advised to check the validity of this Appraisal by referring to the Valid Appraisals listing on the BRANZ website, or by contacting BRANZ.

KDC - Approved Building Consent Document - BC210208 - Pg 3 of 197 - 2/07/2021 - ComplyNZ

Design Information

General

7.1 Sikalastic-152 and Sikalastic-220W Waterproofing Membranes are for use in buildings where an impervious waterproof membrane is required to floors and walls to prevent damage to building elements and adjoining areas.

7.2 The membranes must be protected from physical damage by the application of ceramic or stone tile finishes.

7.3 Movement and control joints may be required depending on the shape and size of the building or room, and the tile finish specified. Design guidelines can be found in the BRANZ publication Good Practice Guide – Tiling.

7.4 Timber framing systems must comply with NZS 3604, or where specific engineering design is used, the framing shall be of at least equivalent stiffness to the framing provisions of NZS 3604, or comply with the serviceability criteria of AS/NZS 1170. In all cases framing must be provided so that the maximum span of the substrate as specified by the substrate manufacturer is met and all sheet edges are fully supported. Timber framing systems supporting the substrates must be constructed such that deflections do not exceed 1/360th of the span. Where NZS 3604 is used, the allowable joist spans given in Table 7.1 shall be reduced by 20%.

Substrates

Plywood

8.1 Plywood must be a minimum of 17 mm thick complying with AS/NZS 2269, CD Grade Structural with sanded C face upwards and treated to H3 (CCA treated). LOSP treated plywood must not be used. The plywood must be supported with dwangs or framing with a maximum span of 400 mm in each direction and fixed with 10 g x 50 mm stainless steel countersunk head screws at 150 mm centres on the edges and 220 mm through the body of the sheets.

Fibre Cement Compressed Sheet/ Fibre Cement Sheet Tile Underlay

8.2 Fibre cement compressed sheet must be manufactured to comply with the requirements of AS 2908.2 and must be specified by the manufacturer as being suitable for use as a wet area substrate. Fibre cement sheet tile underlay must be suitable for use in internal wet areas. Installation must be in accordance with the instructions of the manufacturer.

Particleboard

8.3 Particleboard must be specified for the end use in accordance with NZS 3602.

Concrete and Concrete Masonry

8.4 Concrete and concrete masonry substrates must be to a specific engineering design meeting the requirements of the NZBC, such as concrete construction to NZS 3101, concrete slab-on-ground to NZS 3604, and concrete masonry to NZS 4229 and NZS 4230.

Wet Area Wall Linings

8.5 Plasterboard wall linings must be manufactured to comply with AS/NZS 2588 and be suitable for use in internal wet areas.

8.6 Fibre cement sheet must be suitable for use in wet areas.

Durability

Serviceable Life

9.1 Sikalastic-152 and Sikalastic-220W Waterproofing Membranes, when subjected to normal conditions of environment and use, are expected to have a serviceable life of at least 15 years and be compatible with ceramic or stone tile finishes with a design service life of 15-25 years.

Readers are advised to check the validity of this Appraisal by referring to the Valid Appraisals listing on the BRANZ website, or by contacting BRANZ.

KDC - Approved Building Consent Document - BC210208 - Pg 4 of 197 - 2/07/2021 - ComplyNZ

Maintenance

10.1 No maintenance of the membranes will be required provided significant substrate movement does not occur and the tile finish remains intact. Regular checks must be made of the tiled areas to ensure they are sound and will not allow moisture to penetrate. Any cracks or damage must be repaired immediately by repairing the tiles, grouts and sealants.

10.2 In the event of damage to the membranes, the tiling must be removed and the membrane repaired by removing the damaged portion and applying a patch as for new work.

10.3 Drainage outlets must be maintained to operate effectively, and ceramic or stone tile finishes must be kept clean.

Internal Moisture

11.1 Sikalastic-152 and Sikalastic-220W Waterproofing Membranes are impervious to water and when appropriately designed and installed will avoid the likelihood of water penetrating behind linings or entering concealed spaces.

11.2 Sikalastic-152 and Sikalastic-220W Waterproofing Membranes are suitable for use to contain accidental overflow to meet NZBC Clause E3.3.2. A means of code compliance for overflow is given in NZBC Acceptable Solution E3/AS1 Paragraph 2.

11.3 Surfaces must be finished with ceramic or stone tile finishes. A means of code compliance to NZBC Clause E3.3.3 and E3.3.4 is given in NZBC Acceptable Solution E3/AS1 Paragraph 3.1.1 (b), 3.1.2 (b) and 3.3.1 (b).

11.4 Falls in showers and shower areas must be a minimum of 1 in 50. In unenclosed showers, falls must extend a minimum of 1500 mm out from the shower rose. Floor wastes and drainage flanges must be provided and the floor must fall to the outlet.

11.5 The waterproofing membranes must completely cover shower bases, and for unenclosed showers it must extend a minimum of 1500 mm out from the shower rose. Further design guidance on waterproofing wet areas, including waterproofing walls and junctions can be obtained from AS 3740, the BRANZ publication Good Practice Guide – Tiling, and flooring and wallboard manufacturers.

11.6 Where water resistant wall finishes such as prefinished sheet materials are used, they must flash over the membrane a minimum of 30 mm.

Installation Information

Installation Skill Level Requirement

12.1 Installation must always be carried out in accordance with the Sikalastic-152 and Sikalastic-220W Waterproofing Membranes Technical Literature and this Appraisal by, or under the supervision of, a Licensed Building Practitioner (LBP) with the relevant Licence Class.

12.2 Installation and finishing of components and accessories supplied by Sika (NZ) Ltd and its approved applicators must be completed by trained applicators, approved by Sika (NZ) Ltd.

12.3 Installation of the accessories supplied by the building contractor must be carried out in accordance with the Sikalastic–152 and Sikalastic-220W Waterproofing Membranes Technical Literature and this Appraisal by, or under the supervision of, a Licensed Building Practitioner (LBP) with the relevant Licence Class.

Readers are advised to check the validity of this Appraisal by referring to the Valid Appraisals listing on the BRANZ website, or by contacting BRANZ.

KDC - Approved Building Consent Document - BC210208 - Pg 5 of 197 - 2/07/2021 - ComplyNZ

Preparation of Substrates

13.1 Substrates must be dry, clean and stable before installation commences. With surfaces that are even and free from nibs, sharp edges, dust, dirt or other materials such as oil, grease or concrete formwork release agents.

13.2 The relative humidity of the concrete must be 75% or less before membrane application. Concrete substrates can be checked for dryness by using a hygrometer as set out in BRANZ Bulletin No. 585.

13.3 All voids, cracks, holes, joints and excessively rough areas must be filled to achieve an even and uniform surface. Junctions of substrate abutments, such as at wall/floor and wall/wall junctions must have SikaSeal Tape-S installed as set out in the Technical Literature.

13.4 Substrates must be primed with the specified primer and allowed to dry fully before the membrane is installed.

Membrane Installation

14.1 Installation must not be undertaken where the substrate surface temperature is below 5°C or above 35°C.

14.2 Sikalastic-152 liquid and Sikalastic-152 powder must be mixed and left to stand for 5 minutes before re-mixing, then applying. Sikalastic-220W must be thoroughly stirred before application.

14.3 Sikalastic-152 must be applied in a minimum of two coats at the rates set out in the Technical Literature. Subsequent coats must be applied in an opposite direction to the previous coat. The maximum recommended thickness for each coat is 2.0 mm. The total finished system thickness must be a maximum of 4.0 mm.

14.4 Sikalastic-220W must be applied in 2 coats at a minimum of 0.50 mm wet film thickness per coat.

14.5 Application can be made by steel trowel for the Sikalastic-152 as specified in the Technical Data and roller (medium/long nap) or brush (long bristle) for the Sikalastic-220 W.

14.6 In all situations, reinforcement provisions as set out in this Appraisal and the Technical Literature apply.

14.7 Clean up may be undertaken with water.

Tiling

15.1 The membranes must be fully cured before tiling. The cured membranes must be protected at all times to prevent mechanical damage, so may require temporary covers until the finishing is completed.

15.2 Tiling must be undertaken in accordance with AS 3958.1 and the BRANZ publication Good Practice Guide – Tiling. The compatibility of the tile adhesive must be confirmed with the adhesive manufacturer or Sika (NZ) Ltd.

Inspections

16.1 Critical areas of inspection are:

- Construction of substrates, including crack control and installation of bond breakers and movement control joints.
- Moisture content of the substrate prior to the application of the membrane.
- Acceptance of the substrate by the membrane installer prior to application of the membrane.
- Installation of the membrane to the manufacturer's instructions, particularly installation to the correct thickness and use of reinforcement.
- Membrane curing and integrity prior to the installation of tiles including protection from mechanical damage during curing and prior to tile installation.

Health and Safety

17.1 Safe use and handling procedures for the membranes are provided in the Technical Literature. The materials must be used in conjunction with the relevant Material Safety Data Sheet.

Readers are advised to check the validity of this Appraisal by referring to the Valid Appraisals listing on the BRANZ website, or by contacting BRANZ.

KDC - Approved Building Consent Document - BC210208 - Pg 6 of 197 - 2/07/2021 - ComplyNZ

Basis of Appraisal

The following is a summary of the technical investigations carried out:

Tests

18.1 The material properties of Sikalastic-152 and Sikalastic-220W have been assessed by various organisations. The results of this testing have been reviewed by BRANZ and found to be satisfactory.

Other Investigations

19.1 An assessment was made of the durability of Sikalastic-152 and Sikalastic-220W Waterproofing Membranes by BRANZ technical experts.

19.2 Site inspections were carried out by BRANZ to examine the practicability of installation.

19.3 The Technical Literature has been examined by BRANZ and found to be satisfactory.

Quality

20.1 The manufacture of the membranes has not been examined by BRANZ, but details regarding the quality and composition of the materials used were obtained by BRANZ and found to be satisfactory.

20.2 The quality management system of the membrane's manufacturer has been assessed and found to be satisfactory.

20.3 The quality of supply to the market is the responsibility of Sika [NZ] Ltd.

20.4 Designers are responsible for the building design, and building contractors are responsible for the quality of installation of the framing systems and the substrates.

20.5 Quality on site is the responsibility of the trained installers, approved by Sika [NZ] Ltd.

20.6 Building owners are responsible for the maintenance of the ceramic tiles in accordance with the instructions of Sika [NZ] Ltd.

Sources of Information

- AS 2908.2: 2200 Cellulose-cement products – flat sheet.
- AS 3740 – 2010 Waterproofing of domestic wet areas.
- AS 3958.1: 1991 Guide to the installation of ceramic tiles.
- AS/NZS 1170: 2002 Structural design actions.
- AS/NZS 2269: 2012 Plywood – Structural.
- AS/NZS 4858: 2004 Wet area membranes.
- NZS 3101: 2006 Concrete structures standard.
- NZS 3602: 2003 Timber and wood-based products for use in buildings.
- NZS 3604: 2011 Timber framed buildings.
- NZS 4229: 2013 Concrete masonry buildings not requiring specific engineering design.
- NZS 4230: 2004 Design of reinforced concrete masonry structures.
- Good Practice Guide – Tiling, BRANZ, Third Edition, 2015.
- Good Practice Guide – Membrane Roofing, BRANZ , Second Edition, 2015.
- Ministry of Business, Innovation and Employment Record of amendments - Acceptable Solutions, Verification Methods and handbooks.
- The Building Regulations 1992.

Readers are advised to check the validity of this Appraisal by referring to the Valid Appraisals listing on the BRANZ website, or by contacting BRANZ.

KDC - Approved Building Consent Document - BC210208 - Pg 7 of 197 - 2/07/2021 - ComplyNZ

In the opinion of BRANZ, Sikalastic-152 and Sikalastic-220W Interior Waterproofing Membranes are fit for purpose and will comply with the Building Code to the extent specified in this Appraisal provided they are used, designed, installed and maintained as set out in this Appraisal.

The Appraisal is issued only to Sika (NZ) Ltd, and is valid until further notice, subject to the Conditions of Appraisal.

Conditions of Appraisal

1. This Appraisal:
   a) relates only to the product as described herein;
   b) must be read, considered and used in full together with the Technical Literature;
   c) does not address any Legislation, Regulations, Codes or Standards, not specifically named herein;
   d) is copyright of BRANZ.
2. Sika (NZ) Ltd:
   a) continues to have the product reviewed by BRANZ;
   b) shall notify BRANZ of any changes in product specification or quality assurance measures prior to the product being marketed;
   c) abides by the BRANZ Appraisals Services Terms and Conditions;
   d) warrants that the product and the manufacturing process for the product are maintained at or above the standards, levels and quality assessed and found satisfactory by BRANZ pursuant to BRANZ's Appraisal of the product.
3. BRANZ makes no representation or warranty as to:
   a) the nature of individual examples of, batches of, or individual installations of the product, including methods and workmanship;
   b) the presence or absence of any patent or similar rights subsisting in the product or any other product;
   c) any guarantee or warranty offered by Sika (NZ) Ltd.
4. Any reference in this Appraisal to any other publication shall be read as a reference to the version of the publication specified in this Appraisal.
5. BRANZ provides no certification, guarantee, indemnity or warranty, to Sika (NZ) Ltd or any third party.

For BRANZ

Chelydra Percy
Chief Executive

Date of Issue:
14 June 2019

Readers are advised to check the validity of this Appraisal by referring to the Valid Appraisals listing on the BRANZ website, or by contacting BRANZ.

KDC - Approved Building Consent Document - BC210208 - Pg 8 of 197 - 2/07/2021 - ComplyNZ

CLEARLITE BATHROOMS

Shower Tray Installation Instructions

1 Ensure that the walls are plumb and square. The bottom plates must be square to each other to allow the tray to sit in its correct position. For Alcove three sided showers we recommend building the third wall once the tray is onsite to ensure the correct opening is achieved

2 We recommend adding additional studs into the wall that finish flush with the tray ends, this gives the shower installer a solid fixture to screw his Door set into and eliminates the need for wall anchors
Install a horizontal batten to the bottom plate to support the Gib board's lower edge when cut

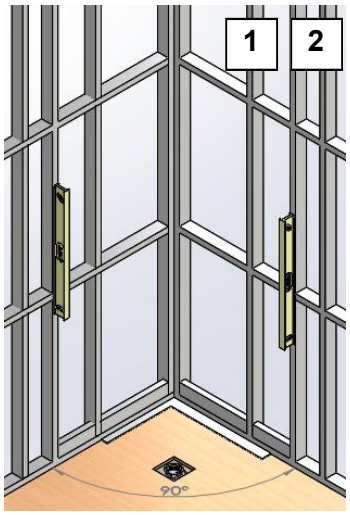

3 Ensure the floor is level

A Useful Guide

For every millimetre the tray is out of level, adjustment of the enclosure will be reduced by 2mm.
e.g. if the tray is 5mm out of level there may be no adjustment left to accommodate out of plumb walls.

If the floor is not level

- Concrete floors - level using a leveling compound available from most flooring outlets.
- Wood floors - Sand or level using a leveling compound

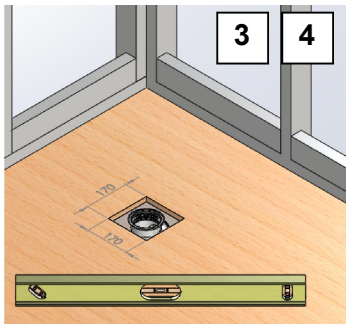

4 Have a qualified plumber install the shower fittings and the waste

IMPORTANT:

- **Hole cut out for waste must not exceed 170mm square**
- **Concrete floors must be back filled around the waste area particularly where any additional cuts in the concrete. (use concrete or a similar solid fill material)**

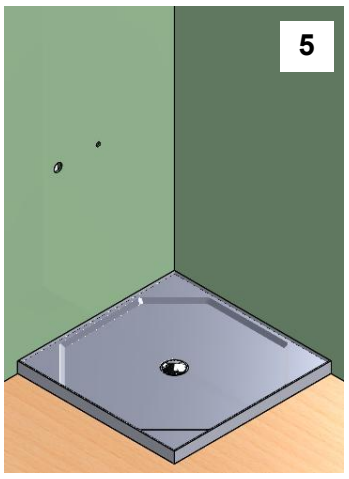

5 Line the framing with 10mm virgin Gib board or an equivalent plaster board to the suppliers recommendations. If installing a 3 sided shower tray it is recommended to line the walls after the tray is installed (Villa board is also an acceptable wall substrate)

DO NOT

Gib Stop, sand, seal or paint the wallboard surface as this will affect the adhesion of the acrylic wall liner

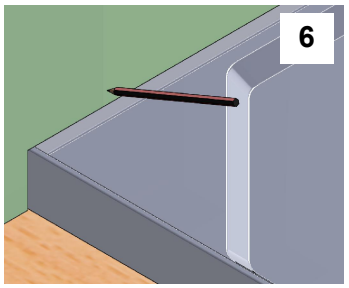

6. Place the shower tray against the Gib board. Scribe a pencil line on the Gib board 5mm above the tray. Ensure to allow for the thickness of the Gib board as the tray will be rebated into the Gib board in its final position (The pencil line marking the front face of the tray will need to be moved back in by 10mm)

7. Remove the tray and cut out the rebate in the Gib Board

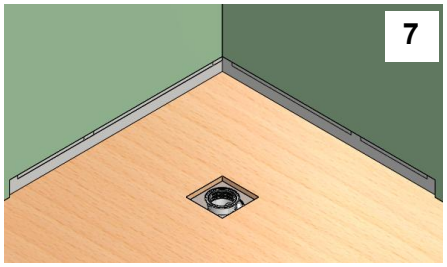

Pre-installation checks

8. Check that the tray is level, if not correct before progressing any further

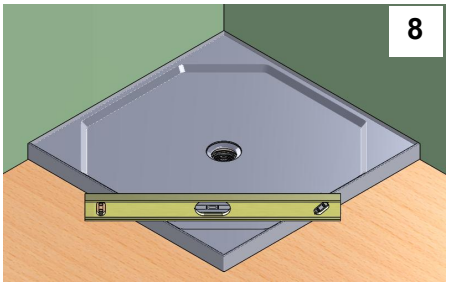

DO NOT

- **Under any circumstance pack the perimeter of the tray to level**
- **Use expanding foams to support the tray, these are of low density and will collapse over time**

Warranty will be voided if the shower tray is not correctly supported

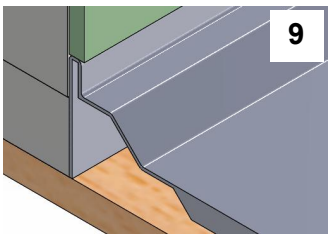

9. Place the tray back into the recess checking that the tray's upstand front face does not protrude further than the Gib board surface. (this could be a result of the walls not being set 90º to each other) If the upstand does protrude further than the Gib board surface the tray will need to be rebated into the bottom plate

10. Check to ensure that the waste outlet will align with the waste body already installed into the floor

11. Sweep the immediate area where the tray will be installed to ensure it is free from any dust or contaminants

Installation

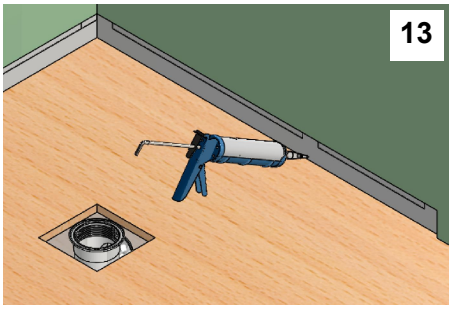

12. The tray is supplied with a clear protective film to prevent surface damage. Remove the film from the upstand and waste area leaving the film intact on the remainder of the tray. This will protect the surface until installation is complete.

13. Apply a bead of Silicone sealant to the face of the Bottom plates. This will prevent the possibility of any squeaking.

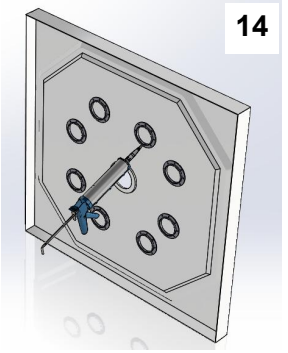

14. Using the supplied Showerbond adhesive apply a generous bead to each of the support rings on underside of the tray.

15. Place the tray into its final position

16. Install the easy clean waste as per the instructions provided with the waste (This must be fitted by a qualified plumber)

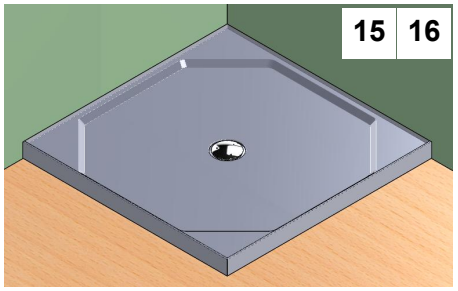

Do not stand on the tray until the Showerbond has cured (approx 24hrs).

KDC - Approved Building Consent Document - BC210208 - Pg 9 of 197 - 2/07/2021 - ComplyNZ

KDC - Approved Building Consent Document - BC210208 - Pg 10 of 197 - 2/07/2021 - ComplyNZ

CLEARLITE BATHROOMS

Corner Moulded Wall Liner Installation Instructions

Before Installation please check that your wall liner is undamaged

- Check to ensure the shower tray has been installed in accordance with the Tray Installation Instructions. The tray must be level to achieve optimum results
- Your Shower has been designed for walls lined with new 10mm Gib board or equivalent wallboards and Villa Board. **Ensure that area that will be covered by the Wall liner is not Gib stopped, sanded, sealed or painted – The Showerbond adhesive will not adhere to these surfaces**
- Only use the Showerbond adhesive supplied, failure to do so will void your warranty
- Ensure that any plumbing outlets are situated as not to obstruct the door when opened.

INSTALLATION

1. Carefully measure and cut out the wall liner for tap-ware. (refer to cutting and drilling instructions on next page)
   Trial fit the wall lining by offering it into the rear corner of tray. The liner must not protrude the front edge of the shower tray as this may affect the door installation.
2. If installing the wall liner onto a tray that has upstands on all four sides there may be a requirement to notch the bottom corners of the liner for correct fitment (see figs 2 & 2a)
   If the tray is installed level and the walls are plumb the liner should sit hard down to the tray surface**.** If the wall liner does not sit flat on the tray it may be scribed and trimmed using a hand plane or sandpaper

   Caution: Trimming the Wall liner will reduce its height, some discretion will be required to determine the amount of trimming possible
3. Using a pencil mark a line around the perimeter of the wall lining.
4. On the tray mark the diagonal position of the wall liner.
5. Remove the Wall Liner. Where the top of the Wall liner cuts across the rear corner attach the two 170mm Support extrusions (supplied with the liner) 5mm below the pencil line as shown - Attach by removing the masking film from the Double sided tape and firmly pressing in place
6. Attach the third 170mm support extrusion to the rear of the wall liner 5mm down from the top (6a shows how this will appear once the wall is installed)

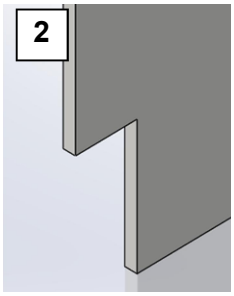

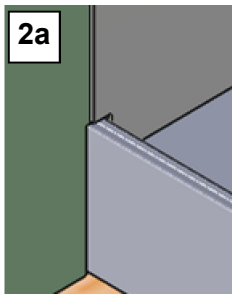

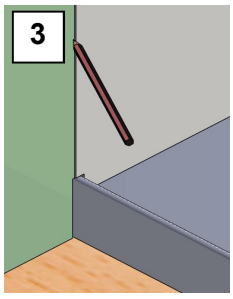

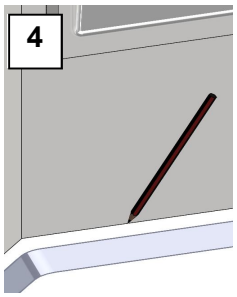

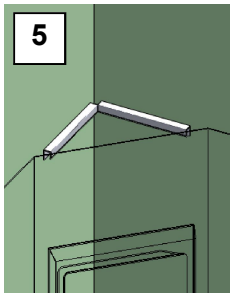

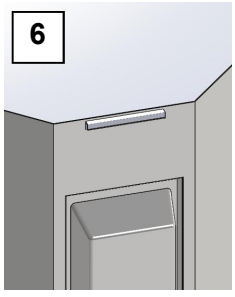

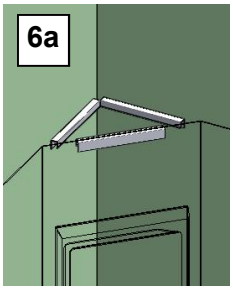

Installation Continued

7. Install the Wall Support Extrusion (310mm with mitred ends) to the tray -Remove the masking film from double sided tape and position the support 3mm back from the pencil line previously made in step 4 (to allow for liner thickness). Place in position and press down firmly
8. Ensure wallboard and rear of wall liner are free from dirt, dust and any contaminants. (To reduce static wipe the rear of the liner with a damp cloth)
9. Apply a **continuous** bead of NG silicone sealant 10mm in diameter along the full length of the Tray's Upstand inside edge .
10. Apply to the face of the Tray Wall Support extrusion and at the junction where it meets the trays upstands.
11. Using the supplied Shower Bond adhesive apply 5-6mm beads in vertical lines at 100mm spacing, staying 10mm in from the marked outline of the wall liner.
    Installation of liner must be complete within 15 min to avoid premature curing of adhesive.
12. Place wall lining into position and press firmly onto adhesive over entire surface. Wipe off any excess sealant or adhesive that may have oozed out
13. Apply Silicone to the top Wall Support extrusions
14. Install the Triangular Corner insert
15. Seal the top edge of the wall liner with a suitable sealant. Bear in mind if painting the Gib surface use a paintable sealant
16. Peel off protective film from lining and fit tap-ware.
    DO NOT remove the tray's protective masking yet.
17. The installation of the enclosure may begin immediately or as required.

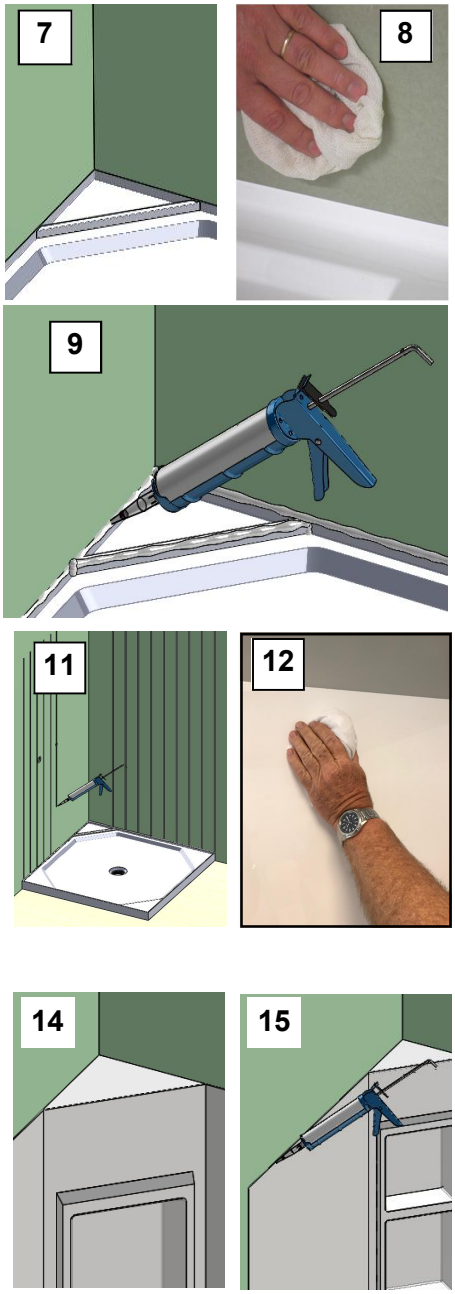

Cutting & Drilling

- Hacksaw or Jigsaw with a minimum of 18 teeth per inch.
- Holes up to 12mm in diameter can be drilled with standard twist drill with a reduced cutting angle.
- Holes larger than 12mm diameter can be cut using a hole saw.
- Edges can be finished with medium grit sandpaper or planed with a hand plane.

KDC - Approved Building Consent Document - BC210208 - Pg 11 of 197 - 2/07/2021 - ComplyNZ

DRAWING DETAILS FOR INTERNAL WET AREAS PER AS 3740 [2004]

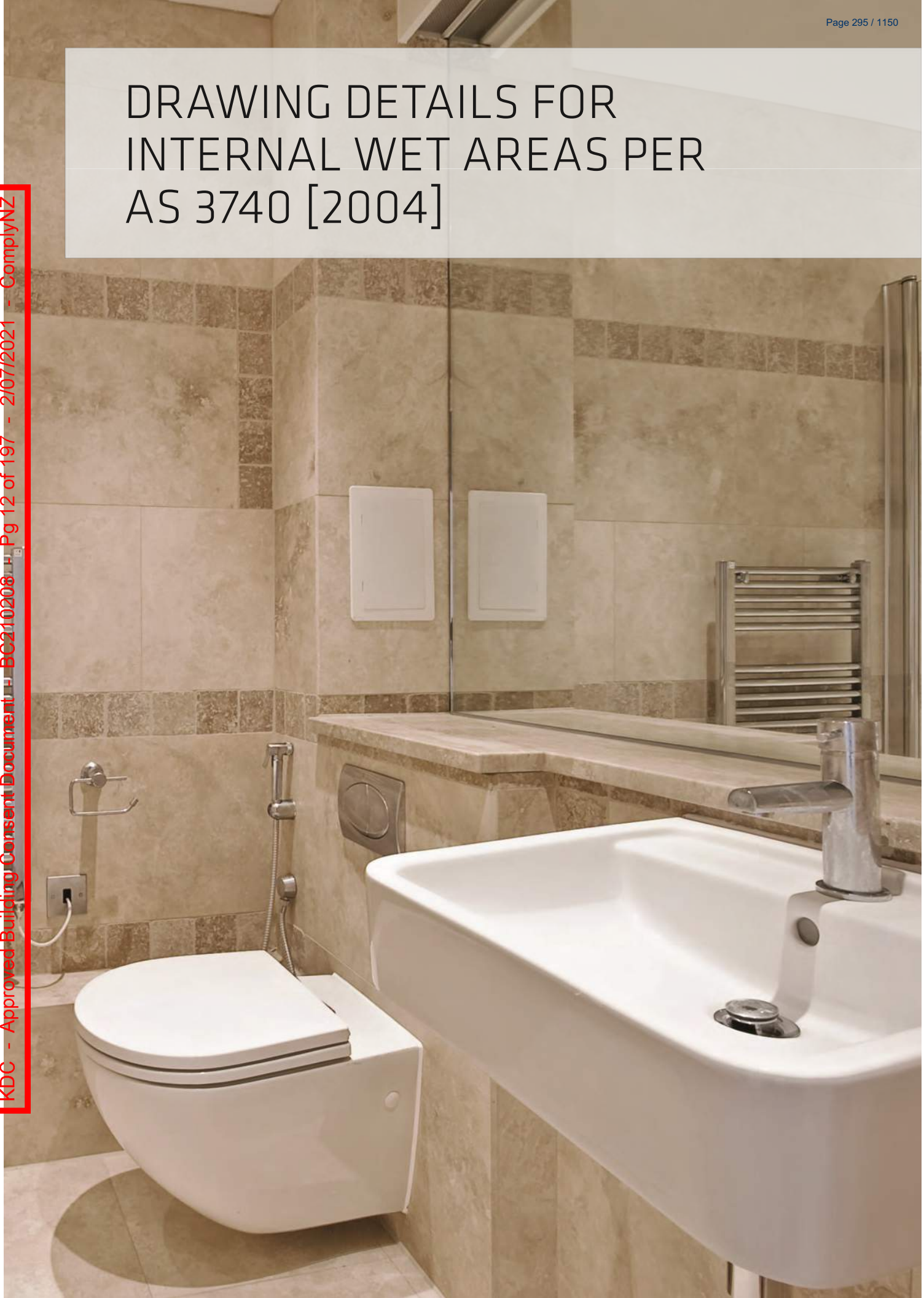

KDC - Approved Building Consent Document - BC210208 - Pg 12 of 197 - 2/07/2021 - ComplyNZ

KDC - Approved Building Consent Document - BC210208 - Pg 13 of 197 - 2/07/2021 - ComplyNZ

TABLE 4.1

GENERAL REQUIREMENTS FOR EXTENT OF APPLICATION

Vessels or area where the fixture is installed	Requirements for elements			
	Floors and horizontal surfaces	Walls	Wall junctions and joints	Penetrations
Shower area				
Enclosed and hobbed	Waterproof entire enclosed **shower area, including hob (see** Figure 4.3(a))	Waterproof to 150 mm min. above the **shower floor substrate or 25 mm min.** above the maximum retained water level and the remainder to be water resistant to a height of 1800 mm min. from finished floor level (see Figure 4.3(a))	Waterproof internal and external **corners and horizontal joints within** a minimum height of 1800 mm. above the floor level with a minimum width of 40 mm either side of junction (see Figure 4.3(a))	Seal all penetrations
Enclosed and hobless	Waterproof entire enclosed shower area including water stop	Waterproof to 150 mm min. above the shower floor substrate and the remainder to be water resistant to a height of 1800 mm min. from finished floor level (see Figure 4.3(a))		
Enclosed and stepped down	Waterproof entire enclosed shower area including the stepdown	Waterproof to 150 mm min. above the shower floor substrate or 25 mm min. above the maximum retained water level and the remainder to be water resistant to a height of 1800 mm min. **from finished floor level (see** Figure 4.3(a))		
Enclosed and preformed shower base	N/A	Water resistant to a height of 1800 mm min. from finished floor level (see Figure 4.3(a))	Waterproof internal and external corners and horizontal joints to a minimum height of 1800 mm. above the floor level with a minimum width of 40 mm either side of junction (see Figure 4.3(a))	Seal all penetrations

(*continued*)

KDC - Approved Building Consent Document - BC210208 - Pg 14 of 197 - 2/07/2021 - ComplyNZ

TABLE 4.1 (*continued*)

Vessels or area where the fixture is installed	Requirements for elements			
	Floors and horizontal surfaces	**Walls**	**Wall junctions and joints**	**Penetrations**
Unenclosed	Waterproof entire shower area (see Figure 4.3(b))	Waterproof to 150 mm min. above the shower floor substrate or 25 mm min. above the maximum retained water level and the remainder to be water resistant to a height of 1800 mm min. from finished floor level (see Figure 4.3(b))	Waterproof internal and external corners and horizontal joints to a minimum height of 1800 mm. above the floor level with a minimum width of 40 mm either side of junction (see Figure 4.3(b))	Seal all penetrations
Areas outside the shower area for concrete and compressed fibre cement sheet flooring	Water resistant to entire floor	N/A	Waterproof all wall to floor junctions, where a flashing is used the horizontal leg shall be a minimum of 40 mm	N/A
Areas outside the shower area for timber floors including particleboard, plywood and other flooring materials	Waterproof entire floor	N/A	Waterproof all wall to floor junctions, where a flashing is used the horizontal leg shall be a minimum of 40 mm	N/A
Areas adjacent to baths and spas† for concrete and compressed fibre cement sheet flooring*	Water resistant to entire floor	Water resistant to a height of 150 mm min. above vessel and exposed surfaces below vessel lip to floor level* (see Figure 4.1)	Seal edges for extent of vessel and junction of bath enclosure with floor. Where the lip of the bath is supported by a horizontal surface this area shall be waterproof for showers over bath and water resist for all other cases (see Figure 4.1)	Seal all tap and spout penetrations where they occur in a horizontal surface
Areas adjacent to baths and spas† for timber floors including particleboard, plywood and other flooring materials*	Waterproof entire floor	Water resistant to a height of 150 mm min. above vessel and exposed surfaces below vessel lip to floor level*(see Figure 4.2)	Seal edges for extent of vessel and junction of bath enclosure with floor. Where the lip of the bath is supported by a horizontal surface this area shall be waterproof for showers over bath and water resist for all other cases (see Figure 4.2)	Seal all tap and spout penetrations where they occur in a horizontal surface

(*continued*)

KDC - Approved Building Consent Document - BC210208 - Pg 15 of 197 - 2/07/2021 - ComplyNZ

TABLE 4.1 *(continued)*

Vessels or area where the fixture is installed	Requirements for elements			
	Floors and horizontal surfaces	**Walls**	**Wall junctions and joints**	**Penetrations**
Insert baths	N/A for floor under the bath Waterproof entire shelf area, incorporating a waterstop under the bath lip and project a minimum of 5 mm above the tile surface (see Figure 5.2(c))	N/A for wall under the bath Waterproof to 150 mm min. above the lip of the bath*	N/A for wall under the bath*	Seal all tap and spout penetrations where they occur in a horizontal surface
Walls adjoining other vessels (e.g., sink, basin or laundry tub)	N/A	Water resistant to a height of 150 mm min. above vessel if the vessel is within 75 mm min. of the wall (see Figure 4.4)	Where the vessel is fixed to a wall, seal edges for extent of vessel	Seal all tap and spout penetrations where they occur in a horizontal surface
Laundries and WCs	Water resistant to entire floor	Seal all wall to floor junctions with a skirting or flashing to 25 mm min. above the finished floor level, sealed to the floor	Waterproof all wall to floor junctions, where a flashing is used the horizontal leg shall be a minimum of 40 mm	N/A
Bathrooms and laundries requiring a floor waste in accordance with Volume One of the BCA	Waterproof and drain entire floor	N/A	Seal all wall to floor junctions with a skirting or flashing to 25 mm min. above the finished floor level, sealed to the floor	Waterproof where through the floor, otherwise N/A

LEGEND:
N/A = not applicable

* If a shower is included in a bath refer to the requirements for shower area walls and penetrations

† Does not apply to joinery fittings such as vanities

KDC - Approved Building Consent Document - BC210208 - Pg 16 of 197 - 2/07/2021 - ComplyNZ

BUILDING TRUST

TECHNICAL DRAWING

4.1 Extent of treatment for wet areas - shower area over bath - enclosed shower - for concrete and compressed fibre cement sheet flooring.

Drawing details for internal wet areas per AS 3740 - 2004.

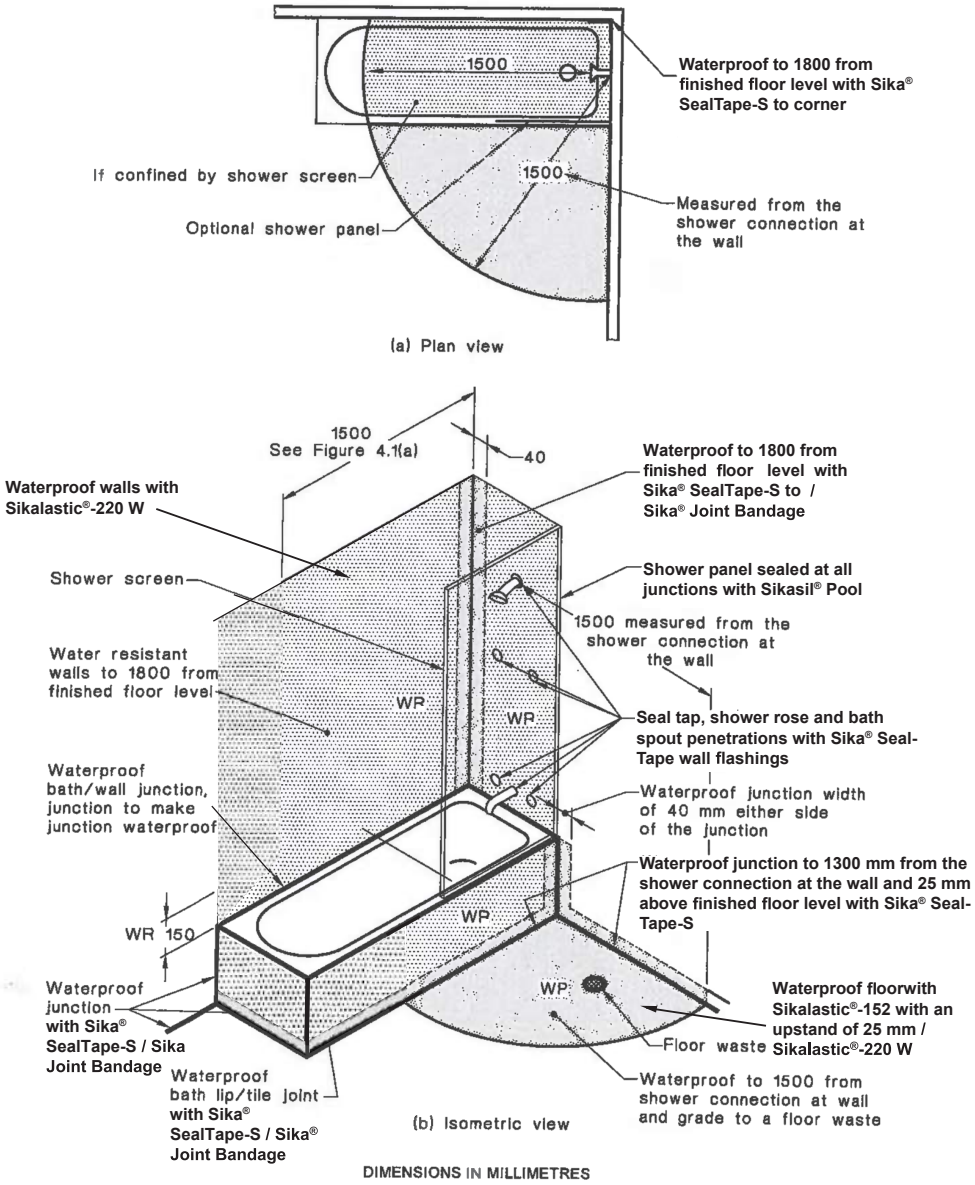

KDC - Approved Building Consent Document - BC210208 - Pg 17 of 197 - 2/07/2021 - ComplyNZ

BUILDING TRUST

TECHNICAL DRAWING

4.2 Extent of treatment for wet areas - shower area over bath - unenclosed shower - for timber floors including particleboard, plywood and other flooring materials.

Drawing details for internal wet areas per AS 3740 - 2004.

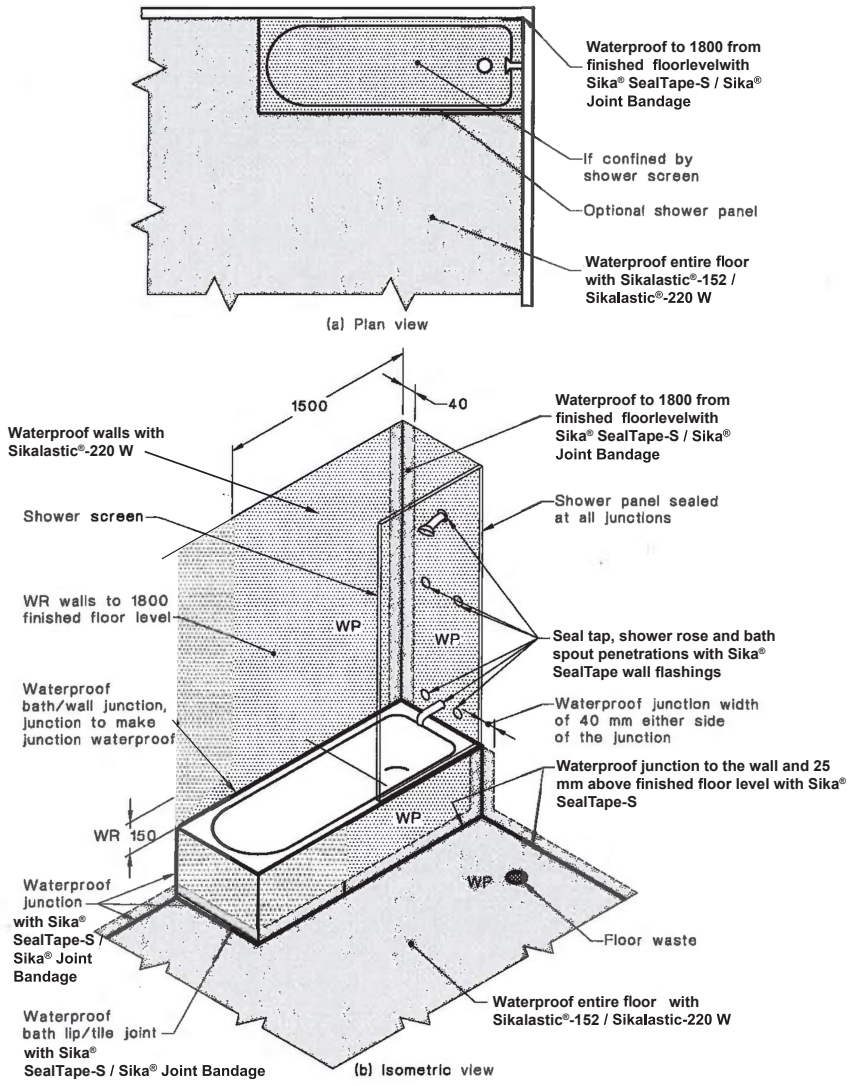

DIMENSIONS IN MILLIMETRES

KDC - Approved Building Consent Document - BC210208 - Pg 18 of 197 - 2/07/2021 - ComplyNZ

BUILDING TRUST

TECHNICAL DRAWING

4.3 Extent of treatment for shower areas - concrete and compressed fibre cement sheet.

Drawing details for internal wet areas per AS 3740 - 2004.

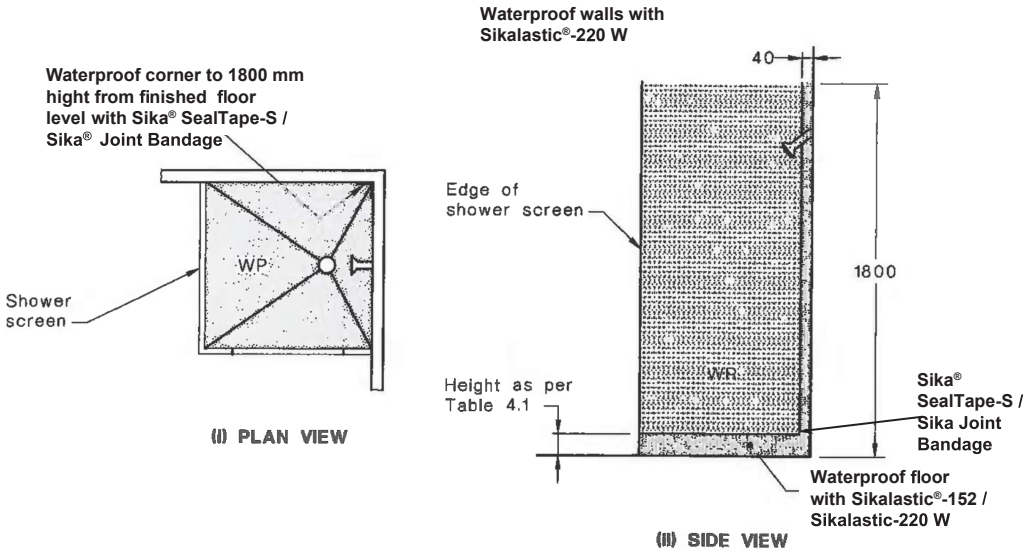

(a) Enclosed shower

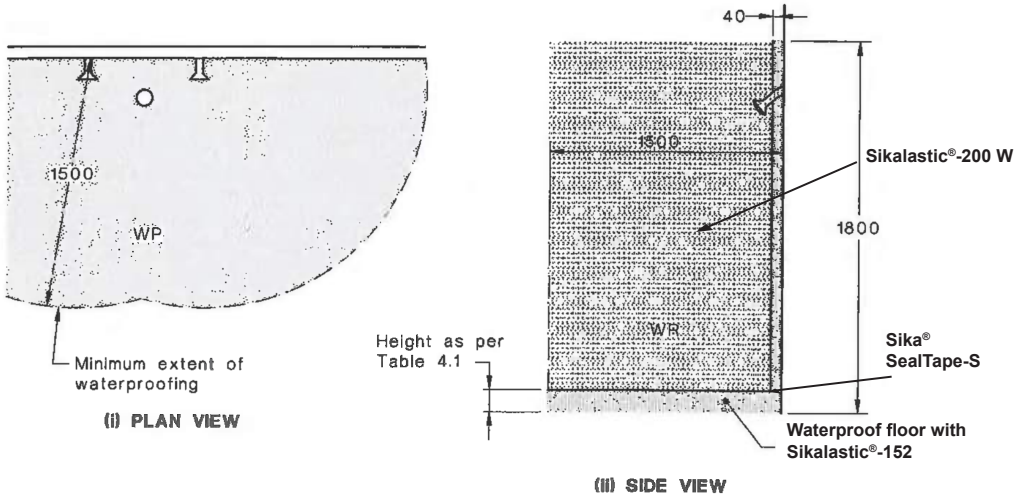

(b) Unenclosed showers—Concrete and compressed fibre cement sheet floors

DIMENSIONS IN MILLIMETRES

KDC - Approved Building Consent Document - BC210208 - Pg 19 of 197 - 2/07/2021 - ComplyNZ

BUILDING TRUST

TECHNICAL DRAWING

4.4 Section through bath extent of treatment for wet areas - baths and other vessels.

Drawing details for internal wet areas per AS 3740 - 2004.

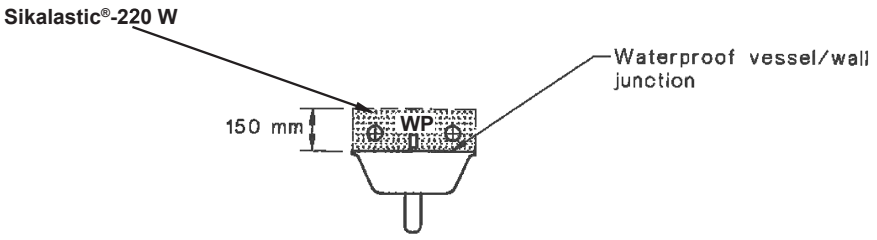

(a) Vessel abutting wall

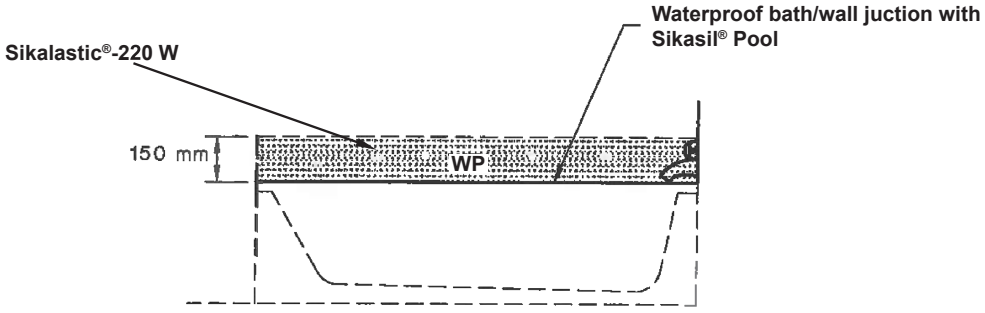

(b) Wall/bath junctions

KDC - Approved Building Consent Document - BC210208 - Pg 20 of 197 - 2/07/2021 - ComplyNZ

BUILDING TRUST

TECHNICAL DRAWING

5.1 Typical preformed shower base junctions.

Drawing details for internal wet areas per AS 3740 - 2004.

BATHS & SPAS

Baths and spas shall be supported to prevent distortion and cracking. Baths and spas recessed into the wall shall be installed to allow the water-resistant surface materials of the wall to pass down inside the rim of the bath or spa (see Figures 5/2(a) and 5.2(b)). When installing baths and spas, the integrity of the structure shall be maintained.

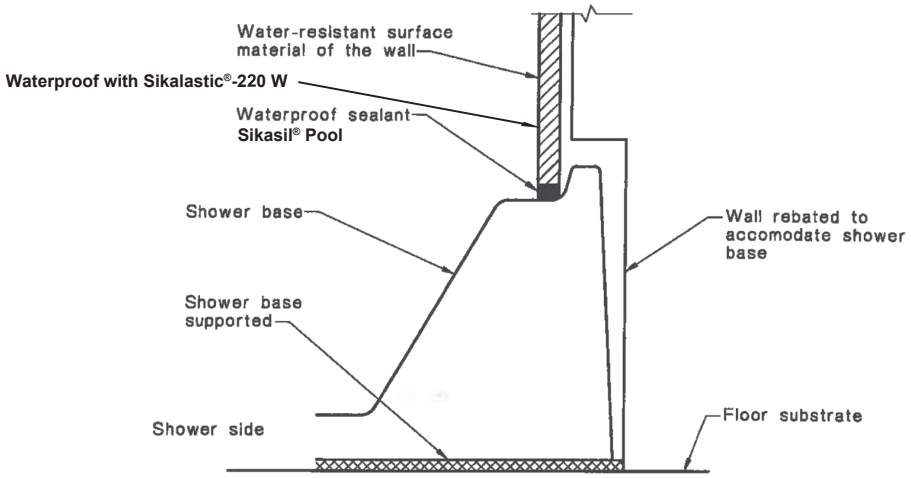

(a) Typical preformed shower base wall/floor junction

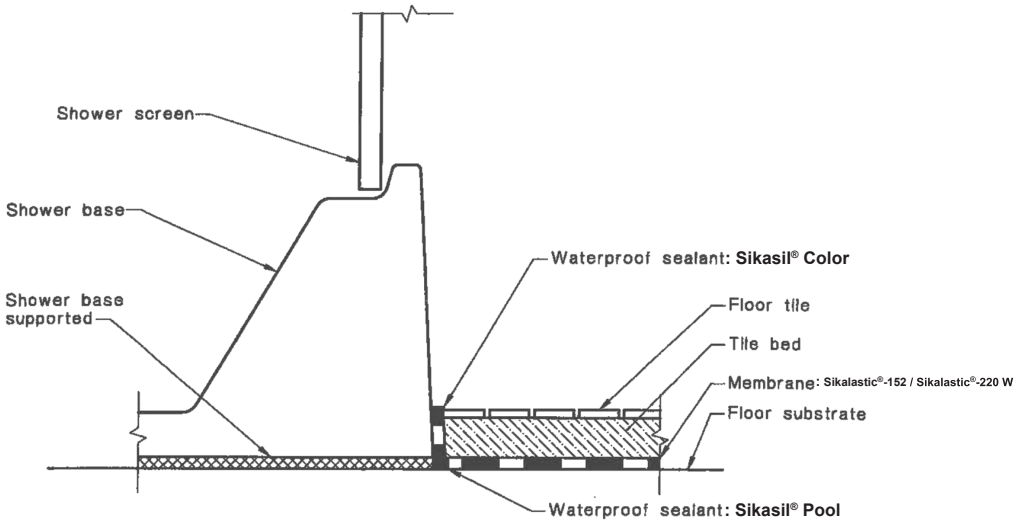

(b) Typical preformed shower base/floor junction on timber floors, including particleboard, plywood and other timber materials

KDC - Approved Building Consent Document - BC210208 - Pg 21 of 197 - 2/07/2021 - ComplyNZ

BUILDING TRUST

TECHNICAL DRAWING

5.2 Typical bath junction.

Drawing details for internal wet areas per AS 3740 - 2004.

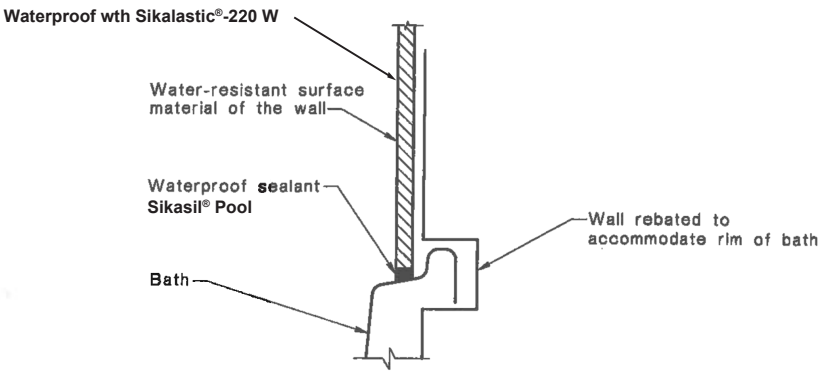

(a) Bath/shelf junction-recessed

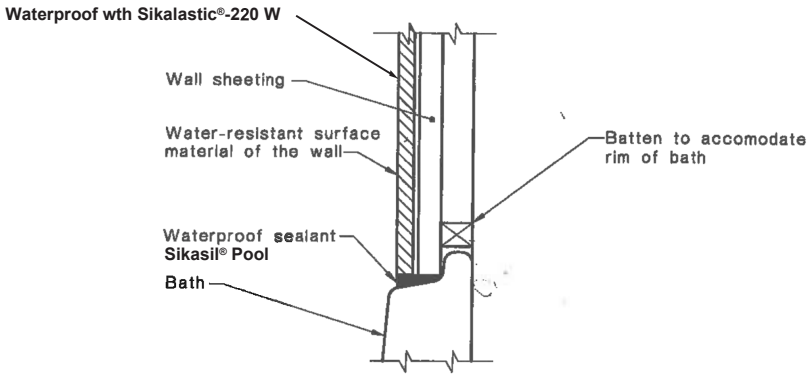

(b) Bath/shelf junction-battened

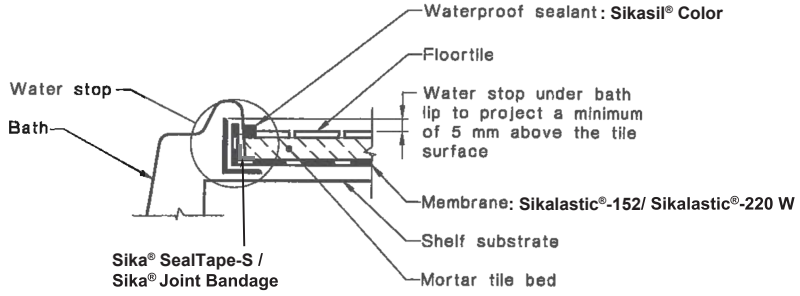

(c) Bath/shelf junction

KDC - Approved Building Consent Document - BC210208 - Pg 22 of 197 - 2/07/2021 - ComplyNZ

BUILDING TRUST

TECHNICAL DRAWING

5.3 Typical bathroom door detail for whole bathroom waterproofing.

Drawing details for internal wet areas per AS 3740 - 2004.

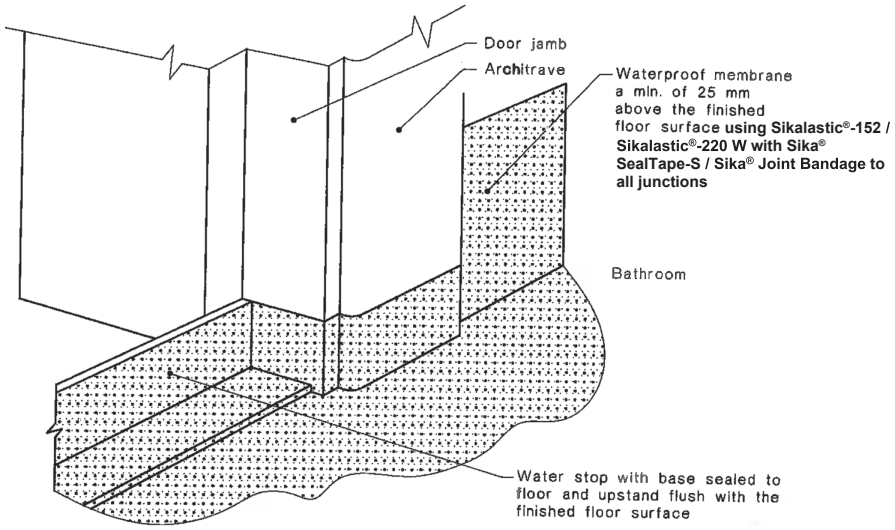

(a) After installation of architrave

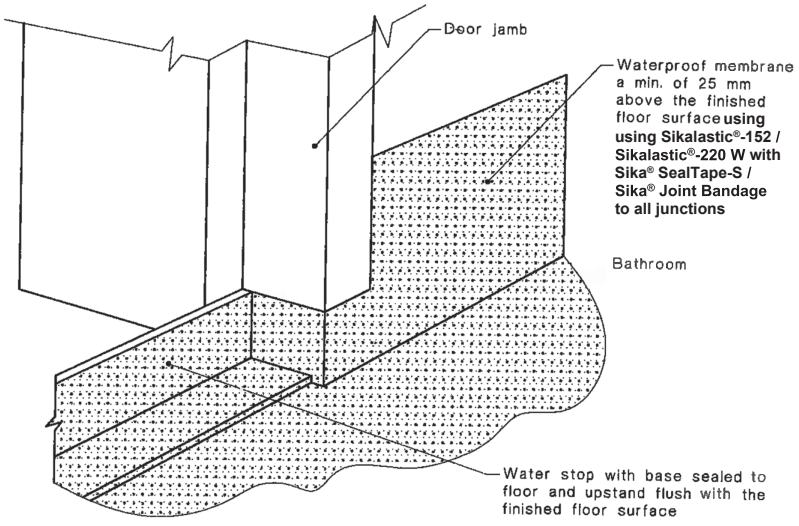

(b) Prior to installation of architrave

BUILDING TRUST

PRODUCT DATA SHEET

Sika BlackSeal Plus (NZ)

LIQUID APPLIED BITUMEN WATERPROOFING MEMBRANE

KDC - Approved Building Consent Document - BC210208 - Pg 23 of 197 - 2/07/2021 - Copy

DESCRIPTION

Sika BlackSeal Plus (NZ) is a bitumen based below ground waterproofing membrane.

USES

Sika BlackSeal Plus (NZ) has been formulated for use as a waterproof membrane behind retaining walls and as a damp-proof membrane for buried faces of basement structures. Sika BlackSeal Plus (NZ) will cover concrete, concrete block, brickwork and wood.

CHARACTERISTICS / ADVANTAGES

- Sika BlackSeal Plus (NZ) has been tested by BRANZ; Sika BlackSeal Plus (NZ) exceeds the vapour flow resistance level requirements for a water vapour barrier as per E2/AS1 - Table 23. (Report No.: DC1454#1, Issued: 9 May 2007, Review date: Indefinite.)
- Fast cure
- Simple to apply by brush, roller or spray
- Excellent adhesion to concrete, masonry, etc.
- Low water permeability
- Can be applied to green concrete
- Resistant to sulphates and ground salts

APPROVALS / STANDARDS

Meets moisture vapour permeability requirements of NZS 3604:2011.

PRODUCT INFORMATION

Packaging	4 litre and 20 litre pails
Colour	Black
Shelf Life	Twelve (12) months when stored as stated.
Storage Conditions	Store in original containers in a dry place below +35°C and away from frost.
Density	1.00 kg/l
Solid content by weight	60%

APPLICATION INFORMATION

Consumption	Minimum total application rate is 1litre per m² (in addition to the primer coat). Ideally this should be applied as two full undiluted coats at a coverage rate of approximately 2m²/ litre / coat, depending on the nature of the surface being treated.
Ambient Air Temperature	+5°C to +50°C
Curing Time	Allow each coat to dry 12-24 hours before recoating.
Drying Time	4 to 6 hours at +20°C. (12-24 hours should be left between coatings.)

KDC - Approved Building Consent Document - BC210208 - Pg 24 of 197 - 2/07/2021 - ComplyNZ

APPLICATION INSTRUCTIONS

SUBSTRATE PREPARATION

- Clean down surface to be treated removing all dust, grease, laitance and foreign matter.
- Remove any form release agent residues and curing compounds by high pressure waterblasting, grit blasting or mechanical wire brushing.
- Grind back smooth any dags or ridges. Any surface irregularities should be filled using Sika MonoTop repair mortars or Sikadur-41 epoxy repair mortar.
- Lightly dampen surface to be treated with water, but ensure that no free water remains.
- Stir Sika BlackSeal Plus (NZ) thoroughly before use.

CONTROL JOINTS:

Movement control joints in concrete or concrete masonry should be sealed with Sika BlackSeal®-1 prior to applying the Sika BlackSeal Plus (NZ). Refer to the Sika BlackSeal®-1 data sheet for details on joint sizes and application methods. For high movement joints refer to the Sika technical department.

APPLICATION METHOD / TOOLS

PRIMING:

Porous surfaces: A primer coat of 1 part clean water to 1 part Sika BlackSeal Plus (NZ) should be used. Add water slowly and mix thoroughly.

APPLICATION:

- Stir thoroughly before use.
- Do not apply in temperatures below 5°C or above 50°C.
- Do not apply to exposed surfaces when rain is imminent.
- Apply Sika BlackSeal Plus (NZ) with a coarse whitewash brush or broom. Soak brushes in water before use and periodically during application. Large flat areas may be applied by roller or squeegee.
- Apply two full undiluted coats of Sika BlackSeal Plus (NZ).
- Allow each coat to dry 12-24 hours before re-coating.
- Protect immediately after curing by using a suitable protection sheet such as Sika BlackSeal® Protection Sheet for walls and by using a cement screed or fibre cement board for floors.
- In floors as a sandwich membrane, blind the final coat with sand to reduce damage.

LIMITATIONS

- Sika BlackSeal Plus (NZ) must be protected immediately after curing by using a suitable protection sheet such as Sika BlackSeal® Protection Sheet for walls and by using a cement screed or fibre cement board for floors.
- Do not expose to sunlight.
- Do not overcoat with paints as staining will occur and if exposed to sunlight the paint film will crack.
- Sika BlackSeal Plus (NZ) is recommended for use only as described in the Uses section of this data sheet.

BASIS OF PRODUCT DATA

All technical data stated in this Product Data Sheet are based on laboratory tests. Actual measured data may vary due to circumstances beyond our control.

LOCAL RESTRICTIONS

Please note that as a result of specific local regulations the performance of this product may vary from country to country. Please consult the local Product Data Sheet for the exact description of the application fields.

ECOLOGY HEALTH AND SAFETY

For information and advice on the safe handling, storage and disposal of chemical products, users shall refer to the most recent Safety Data Sheet (SDS) containing physical, ecological, toxicological and other safety-related data.

LEGAL NOTES

The information, and, in particular, the recommendations relating to the application and end-use of Sika products, are given in good faith based on Sika's current knowledge and experience of the products when properly stored, handled and applied under normal conditions in accordance with Sika's recommendations. In practice, the differences in materials, substrates and actual site conditions are such that no warranty in respect of merchantability or of fitness for a particular purpose, nor any liability arising out of any legal relationship whatsoever, can be inferred either from this information, or from any written recommendations, or from any other advice offered. The user of the product must test the product's suitability for the intended application and purpose. Sika reserves the right to change the properties of its products. The proprietary rights of third parties must be observed. All orders are accepted subject to our current terms of sale and delivery. Users must always refer to the most recent issue of the local Product Data Sheet for the product concerned, copies of which will be supplied on request. It may be necessary to adapt the above disclaimer to specific local laws and regulations. Any changes to this disclaimer may only be implemented with permission of Sika® Corporate Legal in Baar.

KDC - Approved Building Consent Document - BC210208 - Pg 25 of 197 - 2/07/2021 - ComplyNZ

Sika (NZ) Limited
85-91 Patiki Road
Avondale, Auckland 1026
New Zealand
0800 745 269
www.sika.co.nz

Product Technical Statement

PO Box 18071, Glen Innes
Auckland 1743, New Zealand
Freephone 0800 244 737
Fax 0800 766 324
www.gerardroofs.co.nz

Gerard Roofs Pressed Steel Tiles

KDC - Approved Building Consent Document - BC210208 - Pg 26 of 197 - 2/07/2021 - ComplyNZ

Statement of Building Code Compliance

This system if designed, used, installed and maintained in accordance with the supporting technical information and additional conditions and limitations will meet the following provisions of the New Zealand Building Code:

- B1 Structure
- B2 Durability
- E1 Surface Water
- E2 External Moisture

Evidence Base to Support Compliance

This system has the following evidence to support the above solution type declaration:

- Independent technical opinion
- In-house technical opinion
- Independent testing
- In-house testing
- Industry-based scheme
- Historical proof of performance

B1, B2, E1 & E2 reference NZ Metal Roofing & Wall Cladding Manufacturers Code of Practice. Section 10 relates to Pressed Metal Roofing Tiles.

Compliance with NZS4217 Pressed Metal Tile Roofs

Aluminium-zinc coated steel complies with AS1397, not NZS3441 as prescribed in NZS4217. We are also comfortable that we meet the requirements of B2 based on the In-service History Evaluation allowed under B2/VM1. At two severe marine testing sites we have roofs which are in good condition after 23 and 36 years respectively. Evaluations continue on other roofs which are in excess of 30 years.

Copyright © AHI Roofing Ltd ***November 2018. V3***

KDC - Approved Building Consent Document - BC210208 - Pg 27 of 197 - 2/07/2021 - ComplyNZ

Scope of Use

Buildings that comply with NZS3604 with a minimum roof pitch which is profile dependent of between 12 and 20 degrees.

Environmental Conditions

This system is code-compliant for the following environmental conditions:

- Wind Zone - Specific Design
- Corrosion Zone - Sea Spray Extreme
- Seismic Zone - High

Specific design can allow higher wind speeds - batten rafter connections are the limitation.

Installation Conditions

This system is code-compliant on the condition that it has been installed by:

- Licensed Applicator / Installer

Additional Conditions & Limitations

A warranty for the system is supplied with 50 year pro-rated duration.

Material Compatibility with Modern Roofing Materials

If alterations are made to the home after the installation of the roof, such as fitting of chimneys, extensions, installation of skylights, etc., it is important to ensure that the materials that are used are compatible with the roofing material. Gerard Roofs' steel tiles are manufactured from 55% aluminium-zinc coated steel and then post coated with a protective and decorative coating system.

Copyright © AHI Roofing Ltd ***November 2018. V3***

KDC - Approved Building Consent Document - BC210208 - Pg 28 of 197 - 2/07/2021 - ComplyNZ

Dissimilar Metal Corrosion

When two different metals are in contact and moisture is present, one metal is relatively protected while the other suffers accelerated corrosion. A similar effect commonly occurs with water flowing over dissimilar metals. This form of corrosion is commonly found where:

- Water is discharged from copper or brass systems over a galvanised or 55% aluminium-zinc coated steel roof
- Unpainted lead flashings are applied directly to 55% aluminium-zinc coated steel products, or
- Where fasteners are incompatible with the roofing material

Any electrical contact between dissimilar metals should be avoided.

Consenting Instructions

Where Gerard Roof Tiles are specified on plans these must be installed by a trained installer. Substitution is not allowed.

Critical Maintenance

As detailed in our warranty: "It is best to chemically clean the roof before growths are seen as a preventative maintenance measure. Spores may be present on the roof for up to two years before any visible organic growths are noticed. Treating the roof will not only kill the organic growths, but also the spores that lead to them. We suggest treating the roof every three to five years, however if you see growth occurring treat the roof more frequently."

Copyright © AHI Roofing Ltd ***November 2018. V3***

Dektite Aluminium

The best solution for stone chip and pressed metal tiles

- The base is 99.9% pure grade aluminium making it strong, malleable and easy to install.
- Environmentally friendly, ideal where potable water is collected.
- The best solution for stone chip and pressed metal tiles.
- EPDM withstands temperatures from -50°C to 115°C and up to 150°C intermittently.

Code	Base (mm)	Pipe (mm)	Pitch
TFA 12-70	500 x 600	12-70	0-45°
TFA 50-170	600 x 600	50-170	0-45°
TFA 110-200	764 x 764	110-200	0-45°
TFA 160-300	600 X 900	160-300	0-45°
TFA 300-450	965 x 965	300-450	0-45°

Installation Instructions:

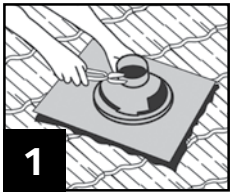

Trim Dektite cone to suit pipe size using sharp tin snips.

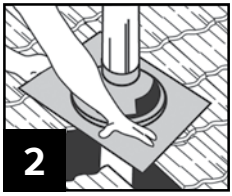

After lubricating the flue with water, slide Dektite down to the tile level.

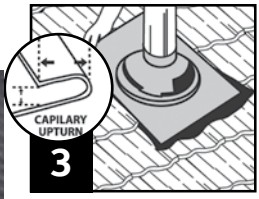

Form an anti-capillary fold then place upper edge of base under up-stream tiles.

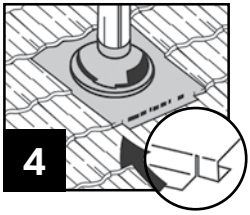

Dress base to profile, cut tabs on the bottom corners and fold under to stop wind lift .

KDC - Approved Building Consent Document - BC210208 - Pg 29 of 197 - 2/07/2021 - Comply NZ

Thermakraft™

THERMAKRAFT215

KDC - Approved Building Consent Document - BC210208 - Pg 30 of 197 - 2/07/2021 - ComplyNZ

Thermakraft 215 self-supporting roof and wall underlay is an absorbent, breathable underlay specifically designed for use in Domestic and Commercial buildings. Suitable as a roof and wall underlay with all cladding types, where Fire Retardancy is NOT required.

- ✓ Versatile building Underlay, designed for use in residential and commercial roof and wall applications.
- ✓ Reduces wind entry into wall and roof cavities, improving thermal efficiency of bulk insulation. Can be used as a vapour control layer, and improve thermal performance if installed and taped on the warm side of bulk insulation.
- ✓ High water resistance provides for temporary weather protection prior to installation of cladding, and acts as a secondary layer of water protection during its serviceable life.
- ✓ Highly water vapour permeable, allowing excess water vapour that may otherwise condense in the wall structure to escape.
- ✓ Lap line printed.

Self-Supporting

High Water Barrier

Breathable

Absorbent

THERMAKRAFT 215

ROOF

WALL

ROOF AND WALL UNDERLAY

TECHNICAL SPECIFICATIONS

NZBC E2/AS1 ROOF UNDERLAY REQUIREMENTS		
NZBC E2/AS1 TABLE 23 ROOF UNDERLAY PROPERTIES	**PROPERTY PERFORMANCE REQUIREMENTS**	**PROPERTY PERFORMANCE**
Absorbency	≥ 150gsm	Pass
Vapour Resistance	≤ 7 MN.s/g	Pass
pH of Extract	≥ 5.5 and ≤ 8	Pass
Shrinkage	≤ 0.5%	Pass
Water Resistance	≥ 100mm	Pass
NZS2295:2206 CLASSIFICATION		
Flammability Index		Non Fire Retardant
Wind Zone	R2	Up to Very High
NZS2295:2006	R2	Self Support

NOTE:
For wall cavity systems, NZBC Acceptable Solution E2/AS1 Paragraph 9.1.5.5 requires where stud spacing's are greater than 450mm centres, an intermediate means of restraining the building underlay and insulation from bulging into the drained cavity shall be installed. An acceptable means of achieving this is by fixing with Thermakraft Stud Strap horizontally at 300mm centres.

Flammability Index
Thermakraft 215 is not fire retardant.

Roll Dimensions:
1250mm x 20m (25m2)
1250mm x 40m (50m2)
M2 is the roll size for actual coverage, allow for laps and joins.

Thermakraft 215 complies with the requirements of NZBC E2/AS1 Table 23. Is suitable for use in the following:

- With absorbent wall claddings directly fixed to timber and steel framing; and,
- With non-absorbent wall claddings directly fixed to timber and steel framing; and,
- With absorbent and non-absorbent wall claddings installed over an 18mm minimum drained cavity; and,
- With masonry veneer in accordance with NZS 3604; and,
- Situated in NZS3604 Building Wind Zones up to, and including 'Very High' (wall); and,
- As a ROOF underlay Self-supporting when run horizontally at pitches 3° and greater. When run vertically at pitches >3° and <10° degrees, 215 must be supported. Support recommended at very low pitches; and,
- As a roof underlay suitable for use with all Roofing materials; and
- Is suitable as an air barrier in unlined wall spaces.

DURABILITY

For Thermakraft 215 to meet the Performance Requirements of NZBC Clause B2, Durability B2.3.1 (a) 50 years and B2.3.1 (b) 15 years, E2 External Moisture providing:

- Installed in accordance to the Application and Installation Guidelines.
- Run length no greater than 10 meters.
- Is not left exposed for more than (7 days) roof.
- Is not left exposed for more than (28 days) wall.
- When used with LOSP treated timber, inspection must be carried out to ensure that the solvent in the LOSP treated timber has sufficient time to dry out (typically 7 days after the treatment process under the suitable environment conditions).
- Installed by or under guidance of Licensed Building Practitioners.
- Installed in accordance with the Roofing Code of Practice.

For additional details and latest specifications www.thermakraft.co.nz **Customer Service 0800 806 595**

KDC - Approved Building Consent Document - BC210208 - Pg 31 of 197 - 2/07/2021 - ComplyNZ

Thermakraft™ THERE IS NO SUBSTITUTE

Thermakraft Ltd 11 Turin Place, East Tamaki, Auckland, New Zealand
P.O.Box 58-112, Botany, Auckland 2163 **Phone** 0800 806 595 or +64 9 273 3727
Fax +64 9 273 3726 **Email** info@thermakraft.co.nz **www.thermakraft.co.nz**

The recommendations contained in Thermakraft's literature are based on good building practice, but are not an exhaustive statement of all relevant information and are subject to any conditions contained in the Warranty. All product dimensions and performance claims are subject to any variation caused by normal manufacturing process and tolerances. Furthermore, as the successful performance of the relevant system depends on numerous factors outside the control of Thermakraft (for example quality of workmanship and design), Thermakraft shall not be liable for the recommendations in that literature and the performance of the Product, including its suitability for any purpose or ability to satisfy the relevant provisions of the Building Code, regulations and standards. Literature subject to change without notification. Latest documentation can be found on the website.

KDC - Approved Building Consent Document - BC210208 - Pg 32 of 197 - 2/07/2021 - ComplyNZ

BRANZ Appraised

Appraisal No. 548 [2019]

TEKTON® BUILDING WRAP

Appraisal No. 548 (2019)

This Appraisal replaces BRANZ Appraisal No. 548 (2013)

BRANZ Appraisals

Technical Assessments of products for building and construction.

Marshall Innovations Limited
PO Box 9411
Greerton
Tauranga
Tel: 07 543 0948
Fax: 07 541 1029
Web: www.mwnz.com

BRANZ
1222 Moonshine Rd,
RD1, Porirua 5381
Private Bag 50 908
Porirua 5240,
New Zealand
Tel: 04 237 1170
branz.co.nz

Product

1.1 Tekton® Building Wrap is a synthetic breather-type flexible wall underlay and air barrier for use under direct and non-direct fixed wall cladding on timber and steel framed buildings. The product is manufactured of a coated spun-bonded polypropylene.

Scope

2.1 Tekton® Building Wrap has been appraised for use as a flexible wall underlay on timber framed buildings within the following scope:

- the scope limitations of NZBC Acceptable Solution E2/AS1, Paragraph 1.1 with regards to building height and floor plan area; and,
- with absorbent wall claddings directly fixed to framing; and,
- with absorbent and non-absorbent wall claddings installed over an 18 mm minimum drained cavity; and,
- with masonry veneer in accordance with NZBC Acceptable Solution E2/AS1; and,
- situated in NZS 3604 Wind Zones up to, and including Very High.

2.2 Tekton® Building Wrap has been appraised for use as a flexible wall underlay on steel framed buildings within the following scope:

- the scope limitations of NZBC Acceptable Solution E2/AS1, Paragraph 1.1 with regards to building height and floor plan area; and,
- with absorbent and non-absorbent wall claddings installed over an 18 mm minimum drained cavity; and,
- with masonry veneer subject to specific design; and,
- situated in NZS 3604 Wind Zones up to, and including Very High.

2.3 Tekton® Building Wrap has been appraised for use as a flexible wall underlay over rigid wall underlays on timber and steel framed buildings within the following scope:

- the scope limitations of NZBC Acceptable Solution E2/AS1, Paragraph 1.1 with regards to building height and floor plan area; and,
- with absorbent and non-absorbent wall claddings installed over an 18 mm minimum drained cavity; and,
- with masonry veneer in accordance with NZBC Acceptable Solution E2/AS1 for timber framed buildings or specific design for steel framed buildings; and,
- situated in NZS 3604 Wind Zones up to and including Extra High.

2.4 Tekton® Building Wrap has also been appraised for use on buildings subject to specific weathertightness design. Building designers are responsible for the building design and for the incorporation of Tekton® Building Wrap into their design in accordance with the declared properties and the instructions of Marshall Innovations Limited.

Readers are advised to check the validity of this Appraisal by referring to the Valid Appraisals listing on the BRANZ website, or by contacting BRANZ.

KDC - Approved Building Consent Document - BC210208 - Pg 33 of 197 - 2/07/2021 - ComplyNZ

Building Regulations

New Zealand Building Code (NZBC)

3.1 **In the opinion of BRANZ, Tekton® Building Wrap, if used, designed, installed and maintained in accordance with the statements and conditions of this Appraisal, will meet, or contribute to meeting the following provisions of the NZBC:**

Clause B2 DURABILITY: Performance B2.3.1 (a), not less than 50 years, B2.3.1 (b), 15 years and B2.3.2. Tekton® Building Wrap meets these requirements. See Paragraphs 9.1 and 9.2.

Clause E2 EXTERNAL MOISTURE: Performance E2.3.2. When used as part of the cladding system, Tekton® Building Wrap will contribute to meeting this requirement. See Paragraphs 12.1 – 12.3.

Clause F2 HAZARDOUS BUILDING MATERIALS: Performance F2.3.1. Tekton® Building Wrap meets this requirement and will not present a health hazard to people.

Technical Specification

4.1 Tekton® Building Wrap is a 100 g/m^2 light grey sheet polypropylene membrane material approximately 0.6 mm thick.

4.2 The product is supplied in rolls 1.370 m x 37 m and 2.743 m x 37 m. The product is printed with the Tekton® logo repeated along the length of the roll. The rolls are wrapped with an instruction sticker.

Accessories

4.3 Accessories used with Tekton® Building Wrap which are supplied by the installer are:

- Fixings – staples, clouts, screws or proprietary wrap fixings, or other temporary fixings to attach the wall wrap to the framing.
- Wall underlay support – polypropylene strap, 75 mm galvanised mesh or galvanised wire, or vertical cavity battens where required to support the wall wrap in accordance with NZBC Acceptable Solution E2/AS1, Paragraph 9.1.8.5.

Handling and Storage

5.1 Handling and storage of the product, whether on or off site, is under the control of the installer. The rolls must be protected from damage and weather. They must be stored on end, under cover, in clean, dry conditions and must not be crushed.

Technical Literature

6.1 Refer to the Appraisals listing on the BRANZ website for details of the current Technical Literature for Tekton® Building Wrap. The Technical Literature must be read in conjunction with this Appraisal. All aspects of design, use, installation and maintenance contained in the Technical Literature and within the scope of this Appraisal must be followed.

Design Information

Timber and Steel Framing

7.1 Studs must be provided at maximum 600 mm centres. Dwangs must be fitted flush between the studs at maximum 1200 mm centres.

General

7.2 Tekton® Building Wrap is intended for use as an alternative to conventional building papers which are fixed over timber and steel framed walls in order to limit the entry of wind into building cavities, and to act as a secondary barrier to wind-driven rain.

7.3 The material also provides a degree of temporary weather protection during early construction. However, the product will not make the building weathertight and some wetting of the underlying structure is always possible before the building is closed in. Hence, the building must be closed-in and made weatherproof before moisture sensitive materials such as wall or ceiling linings and insulation materials are installed.

Readers are advised to check the validity of this Appraisal by referring to the Valid Appraisals listing on the BRANZ website, or by contacting BRANZ.

KDC - Approved Building Consent Document - BC210208 - Pg 34 of 197 - 2/07/2021 - ComplyNZ

7.4 Tekton® Building Wrap must not be exposed to the weather or ultra violet light for a total of more than 60 days before being covered by the wall cladding.

7.5 Tekton® Building Wrap is suitable for use under wall claddings as a wall underlay as called up in NZBC Acceptable Solution E2/AS1, Table 23, except that it must not be used with non-absorbent wall claddings such as vinyl or metal based sidings or weatherboards in direct fixed installations. Tekton® is suitable for use under cavity based wall claddings as a non-absorbent synthetic wall underlay as called up in NZS 2295, Table 2.4 on steel framed buildings. Refer to Table 1.

7.6 Tekton® Building Wrap is also suitable for use as an air barrier to walls that are not lined, such as attic spaces at gable ends, as called up in NZBC Acceptable Solution E2/AS1, Paragraph 9.1.4 (c). Refer to Table 1.

Table 1: NZBC E2/AS1 Table 23 Requirements

NZBC E2/AS1 Table 23 Wall Wrap Properties	**Property Performance Requirement**	**Actual Property Performance**
Absorbency	≥ 100 g/m^2	Classified as non-absorbent (see paragraph 7.5)
Vapour Resistance	≤ 7 MN s/g	Pass
Water Resistance	≥ 20 mm	Pass
pH of Extract	≥ 5.5 and ≤ 8	9.78 *(Note 1)*
Shrinkage	≤ 0.5%	Pass
Mechanical	Edge tear and tensile strength	**Edge tear:** Machine direction = 228 N Cross direction = 186 N **Tensile strength:** Machine direction = 4.4 kN/m Cross direction = 3.9 kN/m
Air Barrier	Air resistance: ≥ 0.1 MN s/m^3	Pass

Note 1: Further testing of Tekton® Building Wrap was completed to determine the effect of the high pH level on the wall underlay and materials it is likely to come into contact with during its serviceable life. The testing confirmed that the high pH had no adverse effects on the wall underlay performance, or the performance of other materials.

7.7 In cavity installations where the cavity battens are installed at greater than 450 mm centres, the wall underlay must be supported between the battens to prevent the wall underlay bulging into the cavity space when bulk insulation is installed in the wall frame cavity in accordance with the requirements of NZBC Acceptable Solution E2/AS1, Paragraph 9.1.8.5.

Stucco Plaster

7.8 Tekton® Building Wrap is suitable for use as a non-rigid backing material for stucco plaster in accordance with the requirements of NZBC Acceptable Solution E2/AS1, Paragraph 9.3.5.1. The wall underlay must be supported with 75 mm galvanised mesh or plastic tape or wire at 150 mm centres run across the cavity battens to limit deflection to a maximum of 5 mm.

7.9 Tekton® Building Wrap may also be used as a slip layer over rigid backings for stucco plaster in accordance with the requirements of NZBC Acceptable Solution E2/AS1, Paragraph 9.3.3.1 (b).

Readers are advised to check the validity of this Appraisal by referring to the Valid Appraisals listing on the BRANZ website, or by contacting BRANZ.

KDC - Approved Building Consent Document - BC210208 - Pg 35 of 197 - 2/07/2021 - ComplyNZ

Structure

8.1 Tekton® Building Wrap is suitable for use in all Wind Zones of NZS 3604 up to, and including, Very High when used as a flexible building underlay, and all Wind Zones of NZS 3604 up to, and including, Extra High when used as an overlay for rigid building underlays.

Durability

9.1 Tekton® Building Wrap meets code compliance with NZBC Clause B2.3.1 (a), not less than 50 years for building wraps used where the cladding durability requirement or expected serviceable life is not less than 50 years, and code compliance with NZBC Clause B2.3.1 (b), 15 years for building wraps used where the cladding durability requirement is 15 years.

Serviceable Life

9.2 Provided it is not exposed to the weather or ultra-violet light for a total of more than 60 days, and provided the exterior cladding is maintained in accordance with the cladding manufacturer's instructions and the cladding remains weather resistant, Tekton® Building Wrap is expected to have a serviceable life equal to that of the cladding.

Control of Internal Fire and Smoke Spread

10.1 Tekton® Building Wrap has an AS 1530 Part 2 flammability index of not greater than 5 and therefore meets the requirements of NZBC Acceptable Solutions C/AS2 to C/AS6, Paragraph 4.17.8 b), for the surface finish requirements of suspended flexible fabric used as an underlay to exterior cladding that is exposed to view in occupied spaces. It may therefore be used with no restrictions in all buildings.

Prevention of Fire Occurring

11.1 Separation or protection must be provided to Tekton® Building Wrap from heat sources such as fire places, heating appliances, flues and chimneys. Part 7 of NZBC Acceptable Solutions C/AS1 – C/AS6 and NZBC Verification Method C/VM1 provide methods for separation and protection of combustible materials from heat sources.

External Moisture

12.1 Tekton® Building Wrap must be used behind claddings that meet the requirements of the NZBC, e.g. such as those covered by NZBC Acceptable Solution E2/AS1, or claddings covered by a valid BRANZ Appraisal.

12.2 Tekton® Building Wrap, when installed in accordance with the Technical Literature and this Appraisal, will assist in the total cladding systems compliance with NZBC Clause E2.

12.3 When used as an air barrier, particular care must be taken to ensure an air tight barrier is achieved, and weather sealing at all openings and penetrations through the cladding meets the requirements of the NZBC.

Installation Information

Installation Skill Level Requirements

13.1 Installation must always be carried out in accordance with the Tekton® Building Wrap Technical Literature and this Appraisal by, or under the supervision of, a Licensed Building Practitioner (LBP) with the relevant Licence Class.

Readers are advised to check the validity of this Appraisal by referring to the Valid Appraisals listing on the BRANZ website, or by contacting BRANZ.

KDC - Approved Building Consent Document - BC210208 - Pg 36 of 197 - 2/07/2021 - ComplyNZ

Wrap Installation

14.1 Tekton® Building Wrap must be fixed to all framing members at maximum 300 mm centres with hot-dip galvanised, large-head clouts 20 mm long, zinc plated 6-8 mm staples, self-drilling screws, or proprietary wrap fixings. The membrane must be pulled taut over the framing before fixing.

14.2 Tekton® Building Wrap must be run horizontally and must extend from the upper-side of the top plate to the under-side of the bearers or wall plates supporting ground floor joists, or below bottom plates on concrete slabs. Horizontal laps must be no less than 75 mm wide, with the direction of the lap ensuring that water is shed to the outer face of the membrane. End laps must be made over framing and be no less than 150 mm wide.

14.3 The wall underlay should be run over openings and these left covered until windows and doors are ready to be installed. Openings are formed in the membrane by cutting on a 45 degree diagonal from each corner of the penetration. The flaps of the cut membrane must be folded inside the opening and stapled to the penetration framing. Excess wall underlay may be cut off flush with the internal face of the wall frame.

14.4 Tekton® Building Wrap can be added as a second layer over head flashings in accordance with the requirements of NZBC Acceptable Solution E2/AS1, Paragraph 9.1.10.3.

14.5 When fixing the product in windy conditions, care must be taken due to the large sail area created by wide roll widths.

14.6 Any damaged areas of Tekton® Building Wrap, such as tears, holes or gaps around service penetrations, must be repaired. Damaged areas can be repaired by covering with new material lapping the damaged area by at least 150 mm and taping, or by taping small tears.

Inspections

14.7 The Technical Literature must be referred to during the inspection of Tekton® Building Wrap installations.

Basis of Appraisal

The following is a summary of the technical investigations carried out:

Tests

15.1 The following tests have been carried out on Tekton® Building Wrap by Scion: Folding strength of paper in accordance with AS/NZS 1301.423; edge tear resistance and tensile strength in accordance with AS/NZS 4200.1 and air resistance in accordance with BS 6538-3.

15.2 The following tests have been carried out on Tekton® Building Wrap by BRANZ: Absorbency in accordance with AS/NZS 4201.6, Vapour transmission in accordance with ASTM E 96B, Shrinkage in accordance with AS/NZS 4201.3, Water barrier in accordance with AS/NZS 4201.4 and pH of extract in accordance with AS/NZS 1301.421. A range of these tests were completed before and after Tekton® Building Wrap was exposed to ultra-violet light.

15.3 The Flammability Index of Tekton® Building Wrap has been evaluated in accordance with AS 1530.2.

Other Investigations

16.1 A durability opinion was given by BRANZ technical experts.

16.2 Site inspections were carried out by BRANZ to assess methods used for the installation of Tekton® Building Wrap, and to examine completed installations.

16.3 The marketer's Technical Literature, including installation instructions, have been examined by BRANZ and found to be satisfactory.

Readers are advised to check the validity of this Appraisal by referring to the Valid Appraisals listing on the BRANZ website, or by contacting BRANZ.

KDC - Approved Building Consent Document - BC210208 - Pg 37 of 197 - 2/07/2021 - ComplyNZ

Quality

17.1 The manufacture of Tekton® Building Wrap has not been examined by BRANZ, but details regarding the quality and composition of the materials used were obtained by BRANZ and found to be satisfactory. BRANZ has taken note of product certification by ICC-ES and CCMC covering quality aspects associated with the product.

17.2 The quality of supply to the market is the responsibility of Marshall Innovations Limited.

17.3 Building designers are responsible for the design of the building, and for the incorporation of the wall wrap into their design in accordance with the instructions of Marshall Innovations Limited.

17.4 Quality of installation is the responsibility of the installer in accordance with the instructions of Marshall Innovations Limited.

Sources of Information

- AS 1530.2 – 1993 Test for flammability of materials.
- AS/NZS 1301.421s: 1998 Determination of the pH value of aqueous extracts of paper, board and pulp – cold extraction method.
- AS/NZS 4200.1: 1994 Pliable building membranes and underlays – materials.
- AS/NZS 4201.1: 1994 Pliable building membranes and underlays – Methods of test – Resistance to dry delamination.
- AS/NZS 4201.2: 1994 Pliable building membranes and underlays – Methods of test – Resistance to wet delamination.
- AS/NZS 4201.3: 1994 Pliable building membranes and underlays – Methods of test – Shrinkage.
- AS/NZS 4201.4: 1994 Pliable building membranes and underlays – Methods of test – Resistance to water penetration.
- AS/NZS 4201.6: 1994 Pliable building membranes and underlays – Methods of test – Surface water absorbency.
- BS 6538.3: 1987 Method for determination of air permeance using the Garley apparatus.
- NZS 2295: 2006 Pliable, Permeable Building Underlays.
- NZS 3604: 2011 Timber-framed buildings.
- Acceptable Solutions and Verification Methods for New Zealand Building Code External Moisture Clause E2, Ministry of Business, Innovation and Employment, Third Edition July 2005 (Amendment 8, 30 November 2018).
- Ministry of Business, Innovation and Employment Record of amendments - Acceptable Solutions, Verification Methods and handbooks.
- The Building Regulations 1992.

Readers are advised to check the validity of this Appraisal by referring to the Valid Appraisals listing on the BRANZ website, or by contacting BRANZ.

KDC - Approved Building Consent Document - BC210208 - Pg 38 of 197 - 2/07/2021 - ComplyNZ

In the opinion of BRANZ, Tekton® Building Wrap is fit for purpose and will comply with the Building Code to the extent specified in this Appraisal provided it is used, designed, installed and maintained as set out in this Appraisal.

The Appraisal is issued only to Marshall Innovations Limited, and is valid until further notice, subject to the Conditions of Appraisal.

Conditions of Appraisal

1. This Appraisal:
   a) relates only to the product as described herein;
   b) must be read, considered and used in full together with the Technical Literature;
   c) does not address any Legislation, Regulations, Codes or Standards, not specifically named herein;
   d) is copyright of BRANZ.
2. Marshall Innovations Limited:
   a) continues to have the product reviewed by BRANZ;
   b) shall notify BRANZ of any changes in product specification or quality assurance measures prior to the product being marketed;
   c) abides by the BRANZ Appraisals Services Terms and Conditions;
   d) warrants that the product and the manufacturing process for the product are maintained at or above the standards, levels and quality assessed and found satisfactory by BRANZ pursuant to BRANZ's Appraisal of the product.
3. BRANZ makes no representation or warranty as to:
   a) the nature of individual examples of, batches of, or individual installations of the product, including methods and workmanship;
   b) the presence or absence of any patent or similar rights subsisting in the product or any other product;
   c) any guarantee or warranty offered by Marshall Innovations Limited.
4. Any reference in this Appraisal to any other publication shall be read as a reference to the version of the publication specified in this Appraisal.
5. BRANZ provides no certification, guarantee, indemnity or warranty, to Marshall Innovations Limited or any third party.

For BRANZ

Chelydra Percy
Chief Executive

Date of Issue:
14 June 2019

Readers are advised to check the validity of this Appraisal by referring to the Valid Appraisals listing on the BRANZ website, or by contacting BRANZ.

MASONS
Designed Smart, Built Tough.

Flashing Tape
Installation Instructions

KDC - Approved Building Consent Document - BC210208 - Pg 39 of 197 - 2/07/2021 - ComplyNZ

Window Sill Installation Instructions

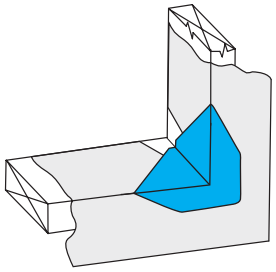

1. Corner Guard *option 1*
Place the *Masons Corner Guard* over the building wrap and into the **bottom** corners of the window or door sill and staple to the jamb. With steel frames use double sided tape to attach the *Corner Guard* to the metal.

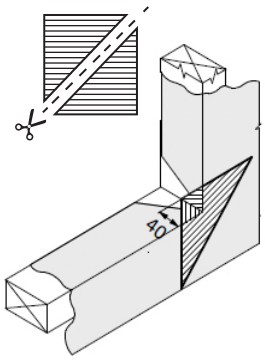

1. Corner Guard *option 2*
Cut a 150mm square of *Flashing Tape* into two equal triangular pieces. Install these at the **bottom** corners of the frame opening. The triangle needs to reach 40mm in from the extreme end of the window sill., with the remainder overlapping the building paper.

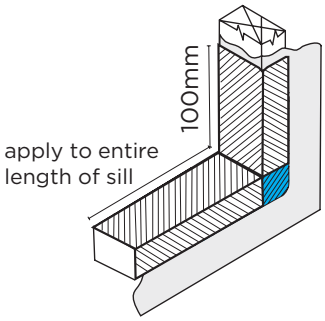

2. Sill Guard

A. Install sill tape flush with the interior face of the opening. Apply along entire length of sill, continue up each jamb with a minimum of 100mm

B. IMPORTANT: Press tape firmly into the corner over the Corner Guard first, then fold around onto the frame face.

C. Fold remainder *Flashing Tape* against outer face of frame/ building. Smooth out all creases & press firmly for good adhesion.

Window Head Installation

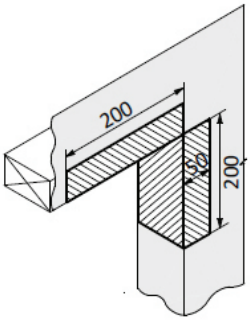

1. Lintel Piece
Install lintel pieces on top corners of opening, 200mm along the lintel and 200mm down the jamb. Slit at each corner and fold onto outer face of building wrap (at least 50mm).

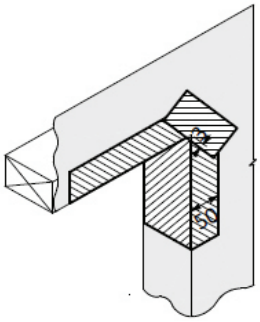

2. Butterflies
To create a seal at corner junction, install butterflies at 45° across the corner of head/jamb.

Window Head Flashing Installation

Apply *Masons Flashing Tape* to top of window head flashing, up-stand and building wrap.
Refer to window & cladding details for specific application.

Cutting Diagram:

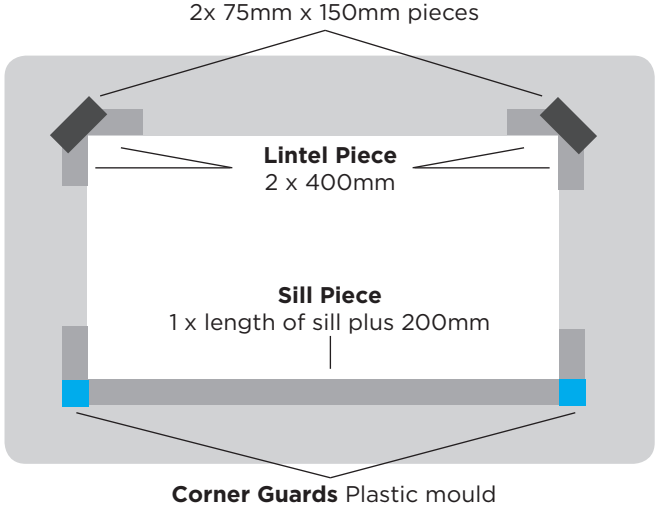

To ensure maximum adhesion of the tape, make sure the substrate surface is clean, dry and free from any dust or other contaminants.

SISALATION
The Original and The Best

KDC - Approved Building Consent Document - BC210208 - Pg 40 of 197 - 2/07/2021 - ComplyNZ

WALL

PRODUCT DATA SHEET

Malthoid® Damp Proof Course

Application

Malthoid® Damp Proof Course (DPC) is a 2 ply felt material impregnated with bitumen and coated with fine sand. It is recommended for use as a moisture barrier between building elements. It can be used as a vapour barrier for structural elements in contact or close proximity with the ground when installed as per the instructions below.

Suitable for use as a;

- Moisture barrier under bottom plates
- Moisture barrier between timber jack studs and timber piles
- Moisture barrier between any wooden surface and concrete, masonry or aluminium

Features and Benefits

- Flexible for quick and easy installation
- Fine sand applied to both surfaces to reduce sticking

Technical Data

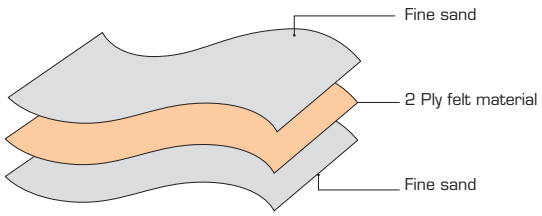

NZBC E2/AS1 Table 23 Classification	Requirement	Performance
Water Vapour Resistance (ASTM E96)	≥ 90 MN s/g	Pass

New Zealand Building Code (NZBC) and Limitations

When used, installed and maintained in accordance with the requirements outlined in this datasheet, will meet or contribute to meeting the following provisions of the NZBC:

NZBC Clause E2: *External Moisture*

Malthoid® Damp Proof-Course satisfies the requirements of NZBC E2/AS1 Table 23, NZS 3604 2.3.3[b].

NZBC Clause B2: *Durability*

Malthoid® will meet the durability requirements of NZBC B2/AS1 Table 1- Damp Proof Course, provided the product is used and installed correctly. Malthoid® must not be used in situations where it will be exposed long-term to sunlight, or prolonged contact with chemicals and solvents.

Limitations

To meet the above Malthoid® must be:

- Installed as specified in this data sheet
- Kept dry at all times and not allowed to remain wet during construction or in service
- Must not be used for head flashings as the bottom edge is normally exposed
- Must not be used around flues and chimneys as a flashing or a damp proof course

SISALATION
The Original and The Best

Installation

General

- Ensure all surfaces are flat and smooth. Remove all loose debris, such as stones, that could puncture the membrane.
- Roll out and cut Malthoid® along the face of the timber using a sharp knife. Malthoid® can be temporarily held in place on timber framing using hot dip galvanised clouts or staples before framing is stood up. Ensure Malthoid® extends at least 6mm beyond each face of the timber.
- When used under timber plates fixed over concrete floor slabs and foundation walls small slits should be made before Malthoid® is pushed over the bolts or fixings.

Prenailed Frames

- When intended for use beneath bottom plates of prenailed wall frames erected on concrete floor slabs, it is recommended that the pre-nailer be encouraged to fix it in place to the underside of the bottom plate before the frames leave the factory.

Specification Notes

Product required: Sisalation® Malthoid® Damp Proof Course

Product Specification

Description	Product Code	Roll Length (Nominal ±5mm)	Area	GSM
Malthoid®	788750	50mm x 20m	9 Rolls/pack	1750
Malthoid®	788775	75mm x 20m	6 Rolls/pack	1750
Malthoid®	788790	90mm x 20m	5 Rolls/pack	1750
Malthoid®	788700	100mm x 20m	4 Rolls/pack	1750
Malthoid®	788715	150mm x 20m	3 Rolls/pack	1750
Malthoid®	788720	200mm x 20m	2 Rolls/pack	1750
Malthoid®	788730	300mm x 20m	2 Rolls/pack	1750

Storage

Sisalation® Malthoid® DPC must be protected against damage and weather. Rolls must be stored on end, under cover in a clean, dry environment. Product must be protected from sharp objects.

KDC - Approved Building Consent Document - BC210208 - Pg 41 of 197 - 2/07/2021 - ComplyNZ

WALL

PRODUCT DATA SHEET

TASMAN INSULATION NEW ZEALAND

Distributed by:
Tasman Insulation New Zealand Limited
9-15 Holloway Place, Penrose,
Auckland 1061, New Zealand

(1) This data sheet may have been superseded. Please refer to pinkbatts.co.nz for the most current information. This datasheet supersedes all previous versions. (2) Tasman Insulation New Zealand Ltd retains the right to change specifications without prior notification. (3) Do not use this product for any application not detailed in this data sheet. (4) Recommendations and advice regarding the use of this product are to be taken as a guide only. The purchaser should ascertain the suitability of this product for the particular end-use situation intended and when used in conjunction with other products. (5) Consult Tasman Insulation New Zealand Ltd for further information. (6) All claims about this product are subject to any variation caused by normal manufacturing process and tolerances. (7) The liability of Tasman Insulation New Zealand Ltd and its employees and agents for any errors or omissions in this data sheet or otherwise in relation to the product is limited to the fullest extent permitted by law. Except where the consumer acquires the goods for the purposes of a business, any rights a consumer may have under the Consumer Guarantees Act are not affected. (8) This information is provided without prejudice to Tasman Insulation New Zealand Ltd standard terms and conditions of sale.

Please consider the environment before printing this.

For further information visit pinkbatts.co.nz or call 0800 746 522

LUMBERLOK®

STUD TO TOP PLATE FIXING SCHEDULE

ALTERNATIVE TO TABLE 8.18 NZS 3604:2011

KDC - Approved Building Consent Document - BC210208 - Pg 42 of 197 - 2/07/2021 - ComplyNZ

NOTE:

- ★ All fixings are designed to resist vertical loads only. Dead loads include the roof weight and standard ceiling weight of 0.20kPa.
- ★ Refer to Table 8.19 NZS 3604:2011 for nailing schedule to resist lateral loads.
- ★ These fixings assume the correct choice of rafter/truss to top plate connections have been made.
- ★ For gable end walls where the adjacent rafter/truss is located within 1200mm and with a maximum verge overhang of 750mm, select stud to top plate fixing using a loaded dimension of 1.5m.
- ★ All fixings assume top plate thickness of 45mm maximum.
- ★ Wall framing arrangements under girder trusses are not covered in this schedule.
- ★ All timber selections are as per NZS 3604:2011.

LOADED DIMENSION DEFINITION

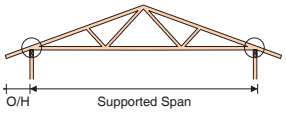

External wall
Standard truss

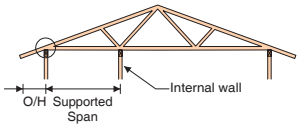

External wall
Internally supported truss

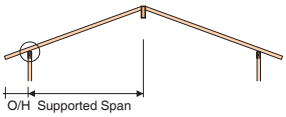

External wall
Rafter roof

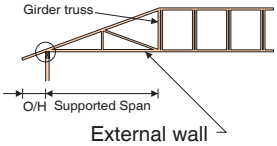

External wall
Jack truss

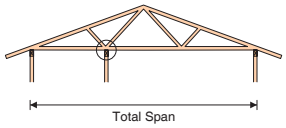

Internal wall
Internally supported truss
(overhang dimension does not apply)

EXTERNAL WALL
LOADED DIMENSION =
$\frac{\text{SUPPORTED SPAN}}{2}$ + O/H

INTERNAL WALL
LOADED DIMENSION =
$\frac{\text{TOTAL SPAN}}{2}$

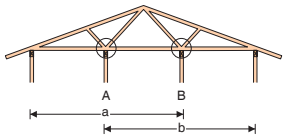

Multiple internal walls
(overhang dimension does not apply)

MULTIPLE INTERNAL WALL
LOADED DIMENSION FOR
WALL A = $\frac{a}{2}$
WALL B = $\frac{b}{2}$

FIXING SELECTION CHART

(Suitable for walls supporting roof members at 600, 900 or 1200mm crs.)
Wind Zones L, M, H, VH, EH, as per NZS 3604:2011

Loaded Dimension (m) Stud Centres			Light Roof Wind Zone					Heavy Roof Wind Zone				
300mm	400mm	600mm	L	M	H	VH	EH	L	M	H	VH	EH
3.0	2.3	1.5	A	A	B	B	B	A	A	B	B	B
4.0	3.0	2.0	A	A	B	B	B	A	A	B	B	B
5.0	3.8	2.5	A	B	B	B	B	A	A	B	B	B
6.0	4.5	3.0	A	B	B	B	B	A	A	B	B	B
7.0	5.3	3.5	A	B	B	B	B	A	A	B	B	B
8.0	6.0	4.0	A	B	B	B	B	A	A	B	B	B
9.0	6.8	4.5	B	B	B	B	B	A	A	B	B	B
10.0	7.5	5.0	B	B	B	B	B	A	A	B	B	B
11.0	8.3	5.5	B	B	B	B	B	A	A	B	B	B
12.0	9.0	6.0	B	B	B	B	B	A	A	B	B	B

FIXING OPTIONS

FIXING TYPE A 0.7kN

2 x 90mm x 3.15 dia. plain steel wire nails driven vertically into stud.

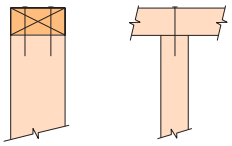

FIXING TYPE B 4.7kN

CHOOSE ANY OF THE 3 OPTIONS BELOW

2 x 90mm x 3.15 dia. plain steel wire nails driven vertically into stud.

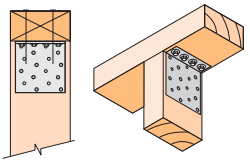

Plus
LUMBERLOK
6kN Stud Anchor
(CPC80)

2 x 90mm x 3.15 dia. plain steel wire nails driven vertically into stud.

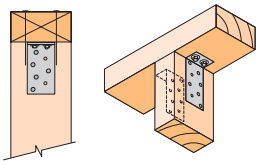

Plus
2 x LUMBERLOK
CPC40

Recommended for internal wall options to avoid lining issues

2 x 90mm x 3.15 dia. plain steel wire nails driven vertically into stud.

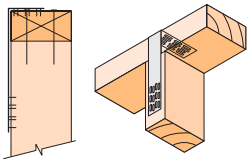

Plus
LUMBERLOK
Stud Strap
(one face only)

NOTE:
To calculate the number of B type fixings required, divide the wall length by the stud centres, add 1 to this figure and locate this number of fixings as evenly as possible along the wall length. This figure includes the start and end studs in each wall length.

SCAN FOR INSTALLATION VIDEO

https://vimeo.com/117353604

MiTek New Zealand Limited

AUCKLAND
PO Box 58-014, Botany 2163
Phone: 09-274 7109
Fax: 09-274 7100

CHRISTCHURCH
PO Box 8387, Riccarton 8440
Phone: 03-348 8691
Fax: 03-348 0314

www.miteknz.co.nz

MITEK® LUMBERLOK® BOWMAC®

© Copyright 2017 MiTek Holdings, Inc.
All rights reserved.

KDC - Approved Building Consent Document ECOPLY® STRUCTURAL BRACING & CEILING DIAPHRAGMS BC210208 Page 43 of 197 - 2/07/2021 - Comply NZ

3.3 ECOPLY® BRACING SPECIFICATION - EPI

Table 10: Singled Sided Structural Plywood Brace

Specification No.	Minimum Wall Length	Lining Requirements	BUs/m Wind	BUs/m Earthquake
EP1_0.4	0.4 m	Ecoply one side	80	95
EP1_0.6	0.6 m	Ecoply one side	95	105
EP1_1.2	1.2 m	Ecoply one side	120	135

Framing

Wall framing must comply with:

- NZBC B1 - Structure: AS1 Clause 3 Timber (NZS 3604)
- NZBC B2 - Durability: AS1 Clause 3.2 Timber (NZS 3602)

Framing dimensions and height are as determined by the NZS 3604 stud and top plate tables for load bearing and non load bearing walls. Kiln dried verified structural grade timber must be used. Machine stress graded timber, such as Laserframe® of SG8 stress grade minimum, is recommended.

Bottom plate fixing

Use GIB Handibrac® hold-down connections at each end of the bracing element. Refer to manufacturer installation instructions supplied with the connectors for correct installation instructions and bolt types to be used for either concrete or timber floors. Within the length of the bracing element, bottom plates are fixed in accordance with the requirements of NZS 3604.

Lining

One layer of 7 mm, 9 mm or 12 mm Ecoply plywood fixed directly to framing or over cavity battens. If part sheets are used, ensure nailing at required centres is carried out around the perimeter of each sheet or part sheet. A 2-3 mm expansion gap should be left between sheets.

Fastening the Ecoply® panels

Fasten with 50 x 2.8 mm hot dipped galvanised or stainless steel flat head nails for direct fix, or 60 x 2.8 mm over cavity battens. Place fasteners no less than 7 mm or 3 fastener diameters from sheet edges. Screws cannot be used. Power driven nails are suitable. Do not overdrive, nails must be full round head.

Fasteners for H3.2 CCA treated Ecoply® panels

Where fasteners are in contact with H3.2 CCA treated timber or plywood, fasteners shall be a minimum of hot dip galvanised.

In certain circumstances stainless steel fasteners may be required. Refer to Table 8 of the Ecoply Specification and Installation Guide for these circumstances and further fastener selection advice. Where stainless steel nails are required, annular grooved nails must be used.

Fastening centres

Fasteners are placed at 150 mm centres around the perimeter of each sheet and 300 mm centres to intermediate studs. Where more than one sheet forms the brace element each sheet must be nailed off independently.

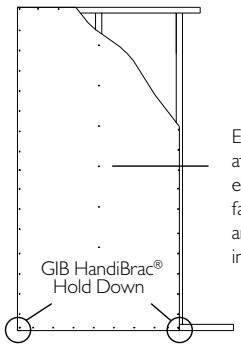

Ecoply® fixed with 50 x 2.8 mm nails at 150 mm centres to perimeter of each sheet at no less than 7 mm or 3 fastener diameters from sheet edge and at 300 mm centres to intermediate studs

Ecoply® Bracing Systems are designed to meet the requirements of the NZBC and have been tested and analysed using the P21 method referenced in NZS 3604:2011 listed as an acceptable solution B1/AS1 Structure. Testing was carried out using Ecoply manufactured by Carter Holt Harvey and SG8 timber framing, and GIB® products manufactured by Winstone Wallboards Ltd. Substituting materials may compromise performance of the system. GIB® and GIB HandiBrac® are registered trade marks of Fletcher Building Holdings Ltd.

SEPTEMBER 2015

KDC - Approved Building Consent Document - BC210208 - Pg 44 of 197 - 2/07/2021 - ComplyNZ

Table 11: Ecoply® Suitability For Bracing Applications Including Treatment Type and Fastener Material*

Application	Plywood Treatment	Fastener Material
Plywood bracing in interior spaces with no risk of exposure to weather or moisture penetration conducive to decay (all exposure zones as per section 4 of NZS 3604, including sea spray):	Ecoply Untreated	Hot dipped galvanised or better
Plywood bracing in enclosed spaces (protected from the weather) but with a risk of moisture penetration conducive to decay in exposure zones B & C, as per section 4 of NZS 3604:	Ecoply H3.1 LOSP/H3.2 CCA treated Ecoply Barrier (rigid air barrier)	Hot dipped galvanised or better
Plywood bracing in enclosed spaces (protected from the weather) but with a risk of moisture penetration conducive to decay in exposure zone D (sea spray), as per section 4 of NZS 3604:	Ecoply H3.1 LOSP/H3.2 CCA treated Ecoply Barrier (rigid air barrier)	Stainless steel
Rigid Air Barrier	Refer to Ecoply Barrier Specification & Installation Guide	
Bracing on framing exposed to ground atmosphere in exposure zones B & C, as per section 4 of NZS 3604	Ecoply H3.1 LOSP/H3.2 CCA treated	Hot dipped galvanised or better
Bracing on framing exposed to ground atmosphere in exposure zones D, as per section 4 of NZS 3604	Ecoply H3.1 LOSP/H3.2 CCA treated	Stainless steel
Bracing in wet process buildings in all exposure zones (including sea spray), as per section 4 of NZS 3604	Ecoply H3.1 LOSP/H3.2 CCA treated	Stainless steel

* Refer to Table 8, page 16 of Ecoply Specification & Installation Guide.

Ecoply® Bracing Systems are designed to meet the requirements of the NZBC and have been tested and analysed using the P21 method referenced in NZS 3604:2011 listed as an acceptable solution B1/AS1 Structure. Testing was carried out using Ecoply manufactured by Carter Holt Harvey and SG8 timber framing, and GIB® products manufactured by Winstone Wallboards Ltd. Substituting materials may compromise performance of the system. GIB® and GIB HandiBrac® are registered trade marks of Fletcher Building Holdings Ltd.

SEPTEMBER 2015

KDC - Approved Building Consent Document BC210208 Page 45 of 197 - 2/07/2021 - Comply NZ
ECOPLY® STRUCTURAL BRACING & CEILING DIAPHRAGMS

3.4 ECOPLY® BRACING SPECIFICATION – EPG

Table 12: Structural Plywood Brace with Plasterboard Other Side

Specification No.	Minimum Wall Length	Lining Requirements	BUs/m Wind	BUs/m Earthquake
EPG_0.4	0.4 m	Ecoply one side and 10 mm GIB® Standard plasterboard other side	100	115
EPG_1.2	1.2 m		150	150

Framing

Wall framing must comply with:

- NZBC B1 - Structure: AS1 Clause 3 Timber (NZS 3604)
- NZBC B2 - Durability: AS1 Clause 3.2 Timber (NZS 3602)

Framing dimensions and height are as determined by the NZS 3604 stud and top plate tables for load bearing and non load bearing walls. Kiln dried verified structural grade timber must be used. Machine stress graded timber, such as Laserframe® of SG8 stress grade minimum, is recommended.

Bottom plate fixing

Use GIB HandiBrac® hold-down connections at each end of the bracing element. Refer to manufacturer installation instructions supplied with the connectors for correct installation instructions and bolt types to be used for either concrete or timber floors. Within the length of the bracing element, bottom plates are fixed in accordance with the requirements of NZS 3604.

Lining

Side 1: One layer of 7 mm, 9 mm or 12 mm Ecoply plywood exterior wall cladding fixed directly to framing or over cavity battens. If part sheets are used, ensure nailing at required centres is carried out around the perimeter of each sheet or part sheet. A 2-3 mm expansion gap should be left between sheets.

Side 2: One layer of 10 or 13 mm GIB® Standard plasterboard vertically or horizontally fixed. Sheet joints are touch fitted and fastener heads and joints stopped in accordance with the GIB® Site Guide.

Fastening the Ecoply® panels

Fasten with 50 x 2.8 mm hot dipped galvanised or stainless steel flat head nails for direct fix, or 60 x 2.8 mm over cavity battens. Place fasteners no less than 7 mm or 3 fastener diameters from sheet edges. Screws cannot be used. Power driven nails are suitable. Do not overdrive, nails must be full round head.

Fasteners for H3.2 CCA treated Ecoply®

Where fasteners are in contact with H3.2 CCA treated timber or plywood, fasteners shall be a minimum of hot dip galvanised. In certain circumstances stainless steel fasteners may be required. Refer to Table 8 of the Ecoply Specification and Installation Guide for these circumstances and further fastener selection advice. Where stainless steel nails are required, annular grooved nails must be used.

Fastening centres

Fasteners are placed at 150 mm centres around the perimeter of each sheet and 300 mm centres to intermediate studs. Where more than one sheet forms the brace element each sheet must be nailed off independently.

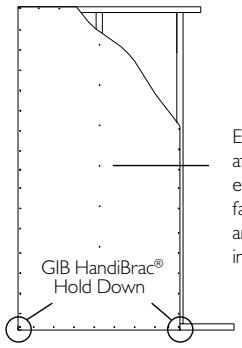

Ecoply® fixed with 50 x 2.8 mm nails at 150 mm centres to perimeter of each sheet at no less than 7 mm or 3 fastener diameters from sheet edge and at 300 mm centres to intermediate studs

Ecoply® Bracing Systems are designed to meet the requirements of the NZBC and have been tested and analysed using the P21 method referenced in NZS 3604:2011 listed as an acceptable solution B1/AS1 Structure. Testing was carried out using Ecoply manufactured by Carter Holt Harvey and SG8 timber framing, and GIB® products manufactured by Winstone Wallboards Ltd. Substituting materials may compromise performance of the system. GIB® and GIB HandiBrac® are registered trade marks of Fletcher Building Holdings Ltd.

SEPTEMBER 2015

KDC - Approved Building Consent Document - BC210208 - Pg 46 of 197 - 2/07/2021 - ComplyNZ

Fastening the GIB® Plasterboard

32 mm x 6 g GIB® Grabber® Screws or 35 mm GIB® Nails

Fastening centres

Fasten 50, 100, 150, 225 and 300 mm from each corner and 150 mm thereafter around the perimeter of the bracing element. For vertical fixing place fasteners at 300 mm centres at intermediate sheet joints. For horizontal fixing place single fasteners in the tapered edge where sheets cross studs.

Place fasteners 12 mm from paper bound edges and 18 mm from cut sheet edges. GIB® plasterboard must be treated in every respect in accordance with relevant GIB® literature.

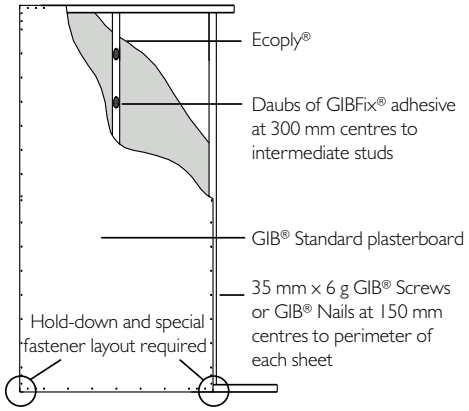

Table 13: Ecoply® Suitability For Bracing Applications Including Treatment Type and Fastener Material*

Application	Plywood Treatment	Fastener Material
Plywood bracing in interior spaces with no risk of exposure to weather or moisture penetration conducive to decay (all exposure zones including sea spray, as per section 4 of NZS3604):	Ecoply Untreated	Hot dipped galvanised or better
Plywood bracing in enclosed spaces (protected from the weather) but with a risk of moisture penetration conducive to decay in exposure zones1 B & C, as per section 4 of NZS 3604:	Ecoply H3.1 LOSP/H3.2 CCA treated Ecoply Barrier (rigid air barrier)	Hot dipped galvanised or better
Plywood bracing in enclosed spaces (protected from the weather) but with a risk of moisture penetration conducive to decay in exposure zone1 D (sea spray), as per section 4 of NZS3604:	Ecoply H3.1 LOSP/H3.2 CCA treated Ecoply Barrier (rigid air barrier)	Stainless steel
Rigid Air Barrier	Refer to Ecoply Barrier Specification & Installation Guide	
Bracing on framing exposed to ground atmosphere in exposure zones B & C, as per section 4 of NZS 3604	Ecoply H3.1 LOSP/H3.2 CCA treated	Hot dipped galvanised or better
Bracing on framing exposed to ground atmosphere in eexposure zone D, as per section 4 of NZS 3604	Ecoply H3.1 LOSP/H3.2 CCA treated	Stainless steel
Bracing in wet process buildings in all exposure zones (including sea spray), as per section 4 of NZS 3604	Ecoply H3.1 LOSP/H3.2 CCA treated	Stainless steel

* Refer to Table 8, page 16 of Ecoply Specification & Installation Guide.

KDC - Approved Building Consent Document - BC210208 - Pg 47 of 197 - 2/07/2021 - ComplyNZ

GIB EzyBrace® Systems specification GS1-N

Specification code	Minimum length (m)	Lining requirement
GS1-N	0.4	Any 10mm or 13mm GIB® Standard plasterboard to one side only

WALL FRAMING

Wall framing to comply with;

- NZBC B1 — Structure B1/AS1 Clause 3 Timber (NZS 3604:2011).
- NZBC B2 — Durability B2/AS1 Clause 3.2 Timber (NZS 3602).

Framing dimensions and height as determined by NZS 3604:2011 stud and top plate tables for load bearing and non-bearing walls. The use of kiln dried stress graded timber is recommended.

BOTTOM PLATE FIXING

Timber floor

Pairs of hand driven 100 x 3.75mm nails at 600mm centres; or three power driven 90 x 3.15mm nails at 600mm centres.

Concrete floor

Internal Wall Bracing Lines: In accordance with the requirements of NZS 3604:2011 for internal wall plate fixing or 75 x 3.8mm shot fired fasteners with 16mm discs spaced at 150mm and 300mm from end studs and 600mm centres thereafter.

External Wall Bracing Lines: In accordance with the requirements of NZS 3604:2011 for external wall bottom plate fixing.

WALL LINING

- Any 10mm or 13mm GIB® plasterboard lining.
- Sheets can be fixed vertically or horizontally.
- Sheet joints shall be touch fitted.
- Use full length sheets where possible.

PERMITTED ALTERNATIVES

For permitted GIB® plasterboard alternatives refer to p. 5 in GIB EzyBrace® Systems literature.

FASTENING THE LINING

Fasteners

32mm x 6g GIB® Grabber® High Thread Screws, 32mm x 7g GIB® Grabber® Dual Thread Screws or 30mm GIB® Nails. If using the GIBFix® Angle use only 32mm x 7g GIB® Grabber® Dual Thread Screws.

Fastener centres

50,100,150, 225, 300mm maximum from each corner and 150mm thereafter around the perimeter of the bracing element. For vertically fixed sheets place fasteners at 300mm maximum centres to intermediate sheet joints. For horizontally fixed sheets place single fasteners to the sheet edge where it crosses the stud. Use daubs of GIBFix® adhesive at 300mm maximum centres to intermediate studs. Place fasteners no closer than 12mm from paper bound sheet edges and 18mm from any sheet end or cut edge.

JOINTING

Joint strength is important in delivering bracing system performance. All fastener heads stopped and all sheet joints GIB® Joint Tape reinforced and stopped in accordance with the GIB® Site Guide.

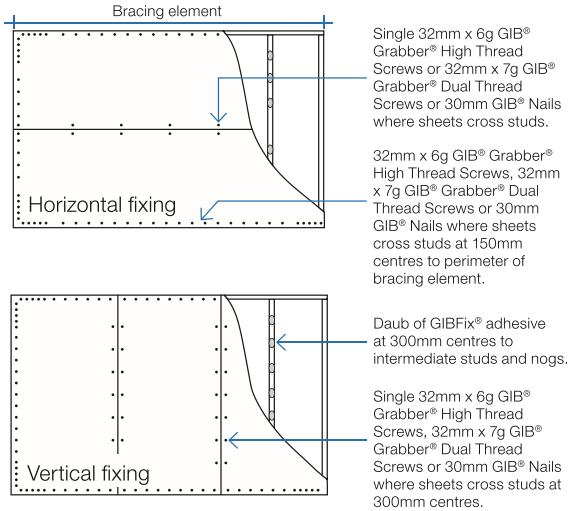

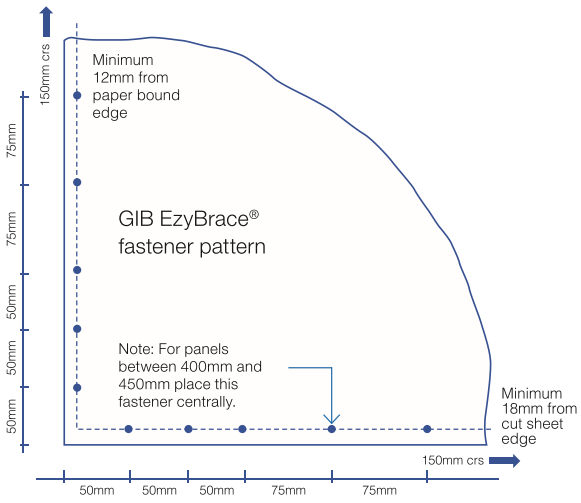

Unless stated all fastener spacings are maximums.

In order for GIB® systems to perform as tested, all components must be installed exactly as prescribed. Substituting components produces an entirely different system and may seriously compromise performance. Follow the specifications. This specification sheet is issued in conjunction with the publication GIB EzyBrace® Systems

Table 7: Water Supply Pipework Support Spacing
Paragraph 7.1.3

Pipe material	Pipe diameter (mm)	Maximum distance between supports (m) Vertical pipe	Graded and horizontal pipe
Copper	10 – 15 20 – 25	1.5 2.0	1.2 1.5
Galvanised steel	15 – 20 25	2.0 3.0	1.5 2.5
uPVC	15 – 20 25	2.0 2.4	1.0 1.2
Polyethylene and polybutylene (cold water supply)	15 – 20 25	1.5 1.8	0.75 0.9
Polybutylene (hot water supply)	15 – 18 20 – 22	1.0 1.4	0.6 0.7

Note:
The spacing for these pipe materials is based on the pipes being located within the *building* structure.

KDC - Approved Building Consent Document - BC210208 - PDF 48 of 197 - 2/07/2021 - ComplyNZ

Amend 5
Feb 2014

6.14.4 The water temperatures within flow and return circulating systems shall be maintained at not less than 60°C.

COMMENT:
Alternative methods of controlling Legionella within hot water circulating or warm water systems may include chlorine disinfection, UV sterilisation, high temperature pasteurisation combined with system flushing as part of a documented maintenance programme.

Third Edition
Dec 2007

7.0 Installation Methods

7.0.1 *Water supply systems* shall be installed to comply with the durability requirements of NZBC B2.

7.1 Pipe supports

7.1.1 Pipes and their supports shall be electrochemically compatible.

7.1.2 Except where anchor points are necessary, the pipes shall be installed and supported in a manner which permits thermal movement.

7.1.3 Support spacing

Above ground water supply pipework shall be securely supported at centres of no greater than those given in Table 7.

7.1.4 Anchor points

Anchor points shall be provided where:

a) Seal ring joints are used, and

b) The joint is not able to resist the thrust imposed by the water pressure.

7.2 Protection from freezing

7.2.1 Where there is the likelihood of freezing, hot and cold *water supply systems* shall be protected in the following manner:

a) Piping outside of the *building* thermal envelope shall be insulated,

b) Piping buried in the ground shall be insulated or installed below a level affected by freezing, and

c) *Storage water heater vent pipes* shall be insulated (see Figure 17).

7.2.2 In climates where freezing temperatures are likely for a period of greater than 24 hours an expansion control valve is required in addition to *vent pipe* insulation (see Figure 17).

316581F
July 2016

KDC - Approved Building Consent Document - BC210208 - Pg 49 of 197 - 2/07/2021 - ComplyNZ

INSTALLATION INSTRUCTIONS
&
OWNERS GUIDE

RHEEM MAINS PRESSURE ELECTRIC HOT WATER HEATERS

Congratulations for choosing a Rheem Water Heater

It is important that you take a few minutes
to read this booklet as it may save you
time and trouble later.
If you require any further information or your
water heater needs to be serviced, please contact the
Rheem Service Department on 0800 657 335,
or the nearest service centre
(look in the Yellow Pages under “Plumbers”)
Or visit www.rheem.co.nz

Important to the Installer

Do not leave this booklet inside the element cover
after installation
Please leave the booklet with the water heater’s owner

IMPORTANT INFORMATION

GENERAL

- The information contained in this manual, and all other information or advice given at any time by Rheem New Zealand Limited in connection with the purchase, installation or use of a Rheem water heater, is given in good faith. Subject to any rights the owner may have under the “Consumer Guarantees Act 1993”, Rheem New Zealand Limited will not be liable to any person for any inaccuracy or omission in the information or advice arising through the fault or negligence of Rheem New Zealand Limited or any other person or through any other cause whatsoever.
- This water heater is not intended to be operated, adjusted or tampered with by young children or infirm persons. Young children should be supervised to ensure they do not play with the water heater.

ABOUT YOUR WATER HEATER

Q. DOES THE WATER QUALITY AFFECT THE WATER HEATER?

A. Your water heater is suitable for most public water supplies, however, some water qualities may have a detrimental effect on it. **If you are in a known harsh water area please refer to page 6**.

Q. HOW HOT SHOULD THE WATER BE?

A. All models (temperature range 60 - 70°C) require an authorised person to make any temperature adjustments. For reasons of safety and economy, we advise the thermostat is adjusted to the lowest setting that meets your needs.

The New Zealand Building Code requires a stored temperature setting of not less than 60°C. A tempering valve set at a maximum of 55°C must be used on domestic wet areas.

Q. HOW DO I KNOW IF THE WATER HEATER IS INSTALLED CORRECTLY?

A. Refer to the installation requirements on page 4.

Q. HOW LONG WILL THE WATER HEATER LAST?

A. There are a number of factors that affect the life of the water heater. These include; the water quality, water pressure, water temperature and the usage pattern, however, your Rheem water heater is supported by a comprehensive warranty (refer to page 7).

The life of the water heater may be extended by arranging for an authorised person to inspect the anode and replace it, if required.

The suggested time after installation when the anode should be inspected is:

Vitreous Enamel 8 years
Optima 10 years

For softened water supplies or in areas of poor water quality, it is recommended the anode be inspected 3 years earlier than shown (refer to "Water Quality" on page 6).

HOW THE WATER HEATER WORKS

SINGLE AND TWIN ELEMENT MODELS

Water stored within the water heater is heated by the electric heating element. The thermostat controls the electricity supply to the heating element so that a constant water temperature is maintained. As the cold water is heated it expands approximately 1/50 of its volume and, as a result, a small amount of water is discharged from the cold water expansion valve.

NON-SIMULTANEOUS ELEMENT MODELS

The two heating elements are wired for non-simultaneous operation, so that only one heating unit can operate at a time. The bottom heating unit is usually connected to an off-peak (overnight) supply and the top heating unit to a continuous supply. **The red link wire must be removed from the terminal block during installation if two separate power supplies are to be used**. Leaving the link in place ensures both elements operate correctly with a single power supply.

The basic operation is as follows: when the water temperature at the top of the water heater has reached the set temperature, the thermostat switches the top element off. This creates a circuit to the bottom heating element by switching the neutral.

SAFETY

On all models, a Temperature and Pressure Relief valve is supplied with each water heater. It can be found inside the front cover and must be mounted on top of the water heater.

Also fitted to the water heater is a thermostat, which incorporates an over-temperature thermal cut-out device.

⚠ ***Warning:*** *The operation of the thermal cut-out indicates a possible dangerous situation. The thermostat and thermal cut-out is to only be adjusted or reset by an authorised service person.*

KDC Approved Building Consent Document - BC210208 - Pg 50 of 197 - 2/07/2021 - ComplyNZ

These safety devices must not be tampered with, or removed, and under no circumstances operate the water heater unless both devices are fitted.

REGULAR CARE

MANUALLY OPERATING THE TEMPERATURE AND PRESSURE RELIEF (TPR) VALVE:

The easing lever (see diagram. 1) on the TPR valve should be operated regularly to remove lime deposits and verify that it is not blocked. **It is very important that you raise and lower the lever gently.**

⚠ ***Warning:*** *To ensure the relief valve is working correctly, operate the relief valve easing lever at least every six months. Failure to do this may result in the water heater over-pressurising.*

DIAGRAM 1

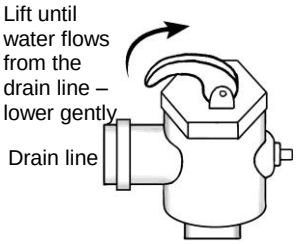

Water Heater

If water does not flow freely from the drain line or the valve fails to completely close and water continues to be discharged, contact the Rheem Service Department, phone **0800 657 335,** or the nearest Rheem Service Centre (look in the Yellow Pages under “Plumbers).

GOING ON HOLIDAYS:

If you plan to be away from home for one or two nights, we suggest that you leave the water heater switched on. However, if you plan to stay away more than a few nights, conserve energy by switching the water heater off at the isolating switch, or at the main switchboard. In locations where freezing could occur, you should leave the water heater turned on.

SAVE A SERVICE CALL

CHECK THE ITEMS BELOW BEFORE MAKING A SERVICE CALL. YOU MAY BE CHARGED FOR SERVICE IF THE FAULT IS NOT RELATED TO THE WATER HEATER MANUFACTURE OR PARTS SUPPLIED WITH THE WATER HEATER BY RHEEM.

WATER DISCHARGING FROM EXPANSION CONTROL VALVES

It is normal for the cold water expansion valve and the temperature and pressure relief valve to discharge a small quantity of water during the heating cycle. If either of these valves discharge more than a bucket full of water in 24 hours, one of the following may be the cause.

- **Continuous dribble**
  Try gently raising the easing lever on the relief valve for a few seconds. This may dislodge small particles of foreign matter and clear the fault.
- **Heavy flow of hot water until the water is cold – then stops while the water reheats**
  Immediately turn off the electricity supply to the water heater. Call the Rheem Service Department or look in the Yellow Pages under “Plumbers” for your nearest Rheem Service Centre or www.rheem.co.nz to arrange an inspection.
- **A steady flow of water (often at night)**
  This may indicate that your cold water pressure sometimes rises above the design pressure of the water heater. A Pressure Limiting valve should be installed, or if one is installed, it may need replacing.

NOT ENOUGH HOT WATER (or no hot water)

- **Is the electricity turned on?**
  Check the switch marked ‘water heater’ at the switchboard and the water heater isolating switch.
  Check the fuse or circuit breaker marked ‘water heater’.

WHERE THE WATER HEATER IS CONNECTED TO AN OFF PEAK (NIGHT RATE) ELECTRICAL TARIFF, THE SUPPLY MAY NOT BE AVAILABLE AT CERTAIN TIMES OF THE DAY.

- **Do you have the correct size heater for your requirements?**
  Refer to the sizing guide in the Rheem sales literature or the Rheem website.
- **Is one outlet (especially the shower) using more hot water than you think?**
  Carefully review the family’s hot water usage and if necessary, check the shower flow rate.
  For maximum efficiency we recommend the flow rate through the shower is between 8 to 10 litres per minute (mixed hot and cold). This can be achieved by installing a flow control valve if provision is not made to fit a flow restrictor in the shower rose.
- **Ensure the thermostat setting is appropriate. Note, some models require an authorised person to make electrical thermostat adjustments.**

HIGH ELECTRICITY BILLS

- **Consider recent changes to your hot water usage pattern and check if there has been an increase in tariffs since your previous account.**
- **Is either of the expansion valves discharging too much water?**

KDC - Approved Building Consent Document - BC210208 - Pg 51 of 197 - 2/07/2021 - ComplyNZ

- **Is one outlet (especially the shower) using more hot water than you think?**
- **Is there a leaking hot water pipe, dripping hot water tap, etc?**
  Even a small leak will waste a surprisingly large quantity of hot water and energy. Replace faulty tap washers, and have your plumber rectify any leaking pipe-work.

INSTALLATION

Please take careful notice of the advice given as Rheem New Zealand Limited will not be liable for any loss or damage suffered as a result of the incorrect installation of the water heater, or any failure to check the capability of the electrical supply wiring to the water heater.

The water heater must be installed by a certified person or registered plumber and the installation must comply with the New Zealand Building Code, Rheem Installation Instructions, AS/NZS 3000 electrical installations and all local codes and regulatory authority requirements. Note that no warranty costs will be payable where the water heater is located in a position that does not comply with the Rheem water heater installation instructions or relevant statutory requirements, where the unit is installed in a position that does not allow safe or ready access, the cost of that access shall not be payable (refer to "Rheem Warranty" on page 7).

- **WATER HEATER LOCATION**
  Water heaters with a galvanised outer casing are only suitable for indoor installations, whereas water heaters with a painted casing are suitable for both indoor and outdoor installations.
  Clearance must be allowed for servicing and removal of the water heater and it must be accessible without the use of a ladder or scaffold. (Typical clearances are: TPR valve removal 135 mm, Element Cover and Element Removal 400 mm). Also, you must be able to read the information on the rating plate and if possible, leave headroom of one water heater length so the anode can be inspected or replaced.
- **CONNECTION SIZES**
  - Hot and Cold water connections: RP *¾ / 20.*
  - Relief valve connection: RP ½ / 15.
- **INLET/OUTLET CONNECTIONS**
  A union must always be provided at the cold water inlet and hot water outlet for disconnection reasons. All connection sockets on the water heater are parallel threaded and therefore tapered brass nipples must be used to ensure watertight connections. Both connections are fitted with plastic liners and it is important that they remain in situ for the water heater to function properly. These liners will be pushed into the correct position as the fitting is being screwed in.
- **NON RETURN VALVE**
  A non return valve must be installed on the cold water line to the water heater.
- **PIPE SIZES**
  The cold water line to the water heater should be the same size or bigger than the hot water line from the water heater. For best results, choose the most suitable pipe size for each individual application.
- **COLD WATER EXPANSION VALVE**
  A cold water expansion valve must be fitted to the cold water line to the water heater.
- **TEMPERATURE AND PRESSURE RELIEF VALVE**
  When fitting the temperature and pressure relief valve, ensure the probe has not been bent. Seal the thread with PTFE tape, or similar, as recommended by the valve manufacturer and screw the valve into the off-centre socket. Do not use a wrench on the valve body – use the spanner flats provided. Drain the TPR valve with a pipe the same size as the valve outlet. The drain must run downwards to a visible point outside the house, preferably over a gully trap.
  In some setups or circumstances, such as if freezing could occur, an air break must be provided in the drain within 300 mm of the TPR valve, refer to the New Zealand Building Code - Clause G12 for requirements and acceptable solutions for the running of hot water drain line(s).
  Warning: The drain line from the TPR valve must be in copper. *A Rheem mains pressure water heater must* ***not*** *be installed and operated without a suitable (valve that complies with AS 1357.1) temperature and pressure relief valve. Under no circumstances block the outlet of this valve or its drain pipe.*
- **WATER SUPPLY PRESSURE**
  Maximum permitted mains water pressure - refer product label and Table 5.2 AS/NZS 3500.4. Note inlet pressure control valve is required where maximum permitted mains pressure is likely to be exceeded.
  Minimum inlet pressure: 60 kPa
- **PRESSURE LIMITING/REDUCING VALVE**
  If the water supply pressure exceeds the requirements of Table 5.2 AS/NZS 3500.4, a pressure limiting valve with a maximum setting of 500 kPa is to be fitted in the installation.
- **SAFE TRAY AND SEISMIC RESTRAINTS**
  The water heater must be installed with a properly drained safe tray where there is the possibility of water damage to furniture, carpets or building. All water heaters must be restrained to protect against seismic forces. (Refer to the Zealand Building Code for acceptable solutions.)

KDC - Approved Building Consent Document - BC210208 - Pg 52 of 197 - 2/07/2021 - ComplyNZ

KDC Approved Building Consent Document - BC210208 - Pg 53 of 197 - 2/07/2021 - ComplyNZ

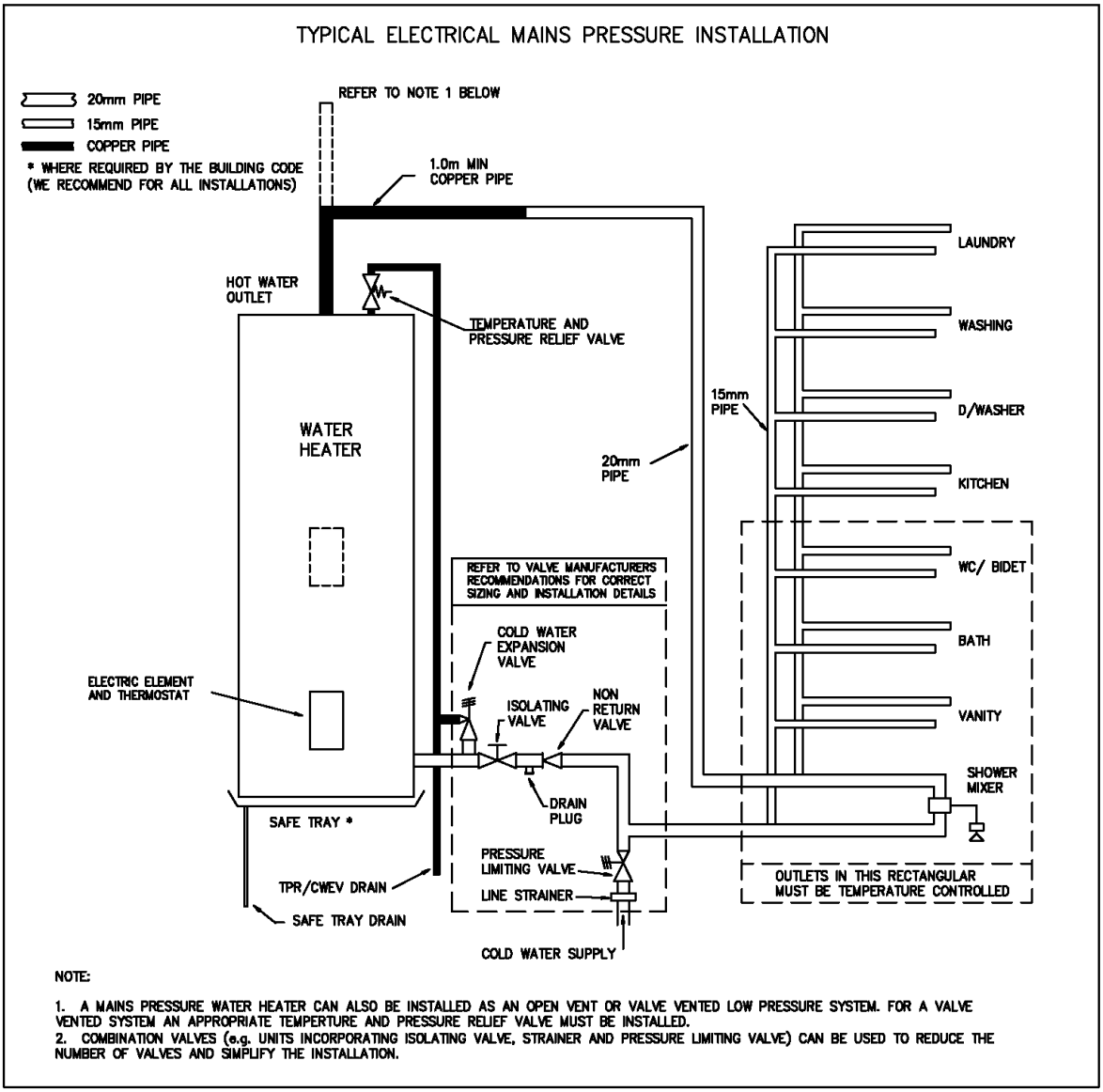

DIAGRAM 2:

CONNECTIONS - ELECTRICAL

The electrical installation must be completed in accordance with AS/NZS 3000. All water heaters are designed for 230 VAC, 50 Hz mains operation and a means of disconnection from the power supply must be incorporated in the fixed wiring during installation.

A flexible 20 mm conduit is required for the electrical cable to the water heater. The conduit is to be connected to the unit with a 20 mm plain to screw adaptor. Connect the power supply wires directly to the terminal block and earth tab connection, ensuring there are no excess wire loops inside the front cover. For details, refer to the wiring diagram on the inside of the element cover. **A separate heating element earth wire is not required because the element earths by the thread of the element boss or the flange being in contact with the element socket.**

COMMISSIONING

TO FILL AND TURN ON THE WATER HEATER

⚠ ***Warning:*** *The power supply to the water heater must not be switched on until the water heater is filled with water and an "earth continuity test", as outlined in Annex A of AS/NZS 60335.1 has been carried out. Failure to do so will damage the element and shorten its life and may create a dangerous situation.*

- Open all of the hot water taps in the house (don't forget the shower). Open the cold water isolation valve fully to the water heater to force the air out of the taps. As water flows freely from each tap, close it. Check the pipe-work for leaks.
- Switch on the electrical supply at the isolating switch to the water heater.

TO TURN OFF THE WATER HEATER

If it is necessary to turn off the water heater on completion of the installation, such as on a building site or where the premises is vacant, then;

- Switch off the electrical supply at the isolating switch to the water heater.
- Close the cold water isolation valve at the inlet to the water heater.

DRAINING THE WATER HEATER

- Switch off the electrical supply at the isolation switch to the water heater.
- Close the cold water isolation valve.
- Operate the relief valve easing lever to release the pressure in the water heater.
- Drain the water heater through the drain valve or plug.
- Undo the top outlet union or operate the relief valve easing lever again to let air into the water heater and allow the water to drain

WHAT YOU SHOULD KNOW ABOUT WATER QUALITY

KDC Approved Building Consent Document - BC210208 Pg 54 of 137 - 2/07/2021 Comply NZ

WATER SUPPLY CHEMISTRY

Water quality can have a detrimental effect on water heater operation, components and life expectancy and may affect the warranty.

⚠ ***Warning****: This water heater must be installed in accordance with advice given to be covered by the Rheem warranty.*

Your Rheem water heater is manufactured to suit the water condition of most local authority water supplies. However, some water supplies can have a detrimental effect on the water heater and its operation and/or life expectancy. This water heater must only be connected to a water supply which complies with these specifications for the Rheem warranty to apply. If you are unsure of your water chemistry you may be able to obtain information from your local water supply authority or you can contact Rheem and we will provide you with contact details of a suitable agency capable of testing your water for compliance with Rheem standards. Water quality tests must be carried out at the owner's cost.

HARSH WATER AREAS

Rheem water heaters are designed for use in areas where the Total Dissolved Solids (TDS) content of the water supply is less than 2500 mg/L.

In areas where the TDS exceeds 600 mg/L it is possible the standard magnesium anode fitted to the water heater, may be excessively active. To alleviate this, the magnesium anode should be replaced with an aluminium anode. Where the TDS of the water is less than 40 mg/L, such as when the water has been deionised or is from an alpine supply, a high potential anode should be used. The changing of anodes must be carried out by a plumber or qualified service person.

CAUTION

If your water supply has a TDS greater than 600 mg/L and the anode has not been changed, there is a possibility of hydrogen gas accumulating in the top of the water heater during long periods of no use.

If, under these conditions, the water heater has not been used for two or more weeks the following procedure should be carried out before using any electrical appliances (e.g. automatic washing machines and dishwashers) which are connected to the hot water supply.

The hydrogen, which is highly flammable, should be vented safely by opening a hot tap and allowing the water to flow. There should be no smoking or naked flames near the tap whilst it is turned on. Any hydrogen gas will be dissipated as indicated by an unusual spurting of the water from the tap. Once the water runs freely again any hydrogen in the system will have been released.

SATURATION INDEX

The saturation index is used as a measure of the water's corrosive or scaling properties. In a scaling water supply calcium carbonate is deposited out of the water onto any hot metallic surface. When scaling water has a saturation index greater than +0.40 an expansion control valve must be fitted on the cold water line after the non-return valve.

Where the saturation index exceeds +0.80, low watts density elements should be used. Where the saturation index is less than -1.0, a corrosive resistant heating unit should be used (contact your local Rheem Service Department or an authorised service person).

Scaling water is water that containing levels of calcium carbonate (total hardness in excess of 200 mg/litre at any time when the water heater is operating) Scaling water can block and prevent the pressure & temperature relief valve from operating, resulting in damage to the water heater storage cylinder and water components. A cold water expansion control valve must be fitted where in all areas with scaling water to assist in preventing blockage of the pressure and temperature relief valve.

⚠ ***Warning:*** *Failure to install an expansion control valve where scaling water conditions occur may result in the water storage cylinder failing or under certain circumstances over pressurising.*

To avoid damage to the storage cylinder and components Rheem strongly recommends scaling water be treated before entering the water heater by fitting appropriate water filters, conditioners, etc – refer to your local water authority for information on water in your area. A build up of white sediment on the hot taps or shower rose can be indicative of scaling water. Contact Rheem if this condition is observed.

Warning: *Damage caused by scaling water can affect the Rheem warranty.*

The Rheem warranty of this water heater will not cover resultant faults on components, including storage tank, due to the effects of sludge and/or sediment as a result of connection to a water supply from silted or untreated sources, i.e. springs, dams, bores, rivers or town supplied from a bore.

WATER HEATERS NOT INSTALLED IN ACCORDANCE WITH THE ABOVE ADVICE WILL NOT BE COVERED BY THE RHEEM WARRANTY.

RHEEM WARRANTY

Mains Pressure Electric Water Heater Product Warranty New Zealand Only

In addition to your legal right, in New Zealand Rheem New Zealand Limited makes the following promise to the owner. We will repair or, if necessary, replace a defective unit or part of it, which has failed due to faulty manufacture on the following terms and conditions:

1. THE RHEEM WARRANTY – GENERAL

1.1 This warranty is given in respect of sales in New Zealand by Rheem New Zealand Limited of 475 Rosebank Road.

1.2 Rheem offer a trained and qualified national service network who will repair or replace components at the address of the unit subject to the terms of the Rheem warranty in New Zealand – contact your Rheem Service Centre on 0800 657 335.

1.3 For details about this warranty, you can contact your Rheem Service Centre in New Zealand on 0800 657 335.

1.4 The terms of this warranty are set out in section 2 and apply to units manufactured after 1st July 2016.

1.5 If a subsequent version of this warranty is published, the terms of that warranty will apply to units manufactured after the date specified in the subsequent version.

2. TERMS OF THE RHEEM WARRANTY AND EXCLUSIONS TO IT

2.1 The decision of whether to repair or replace a faulty component is at Rheem New Zealand Limited's sole discretion.

2.2 Where a failed component or unit is replaced under this warranty, the balance of the original warranty period will remain effective. The replacement does not carry a new Rheem warranty.

2.3 Where the unit is installed outside the boundaries of a metropolitan area, defined by Rheem as further than 25 km from a Rheem service centre, the cost of transport, insurance and travelling between the Rheem service centre and the installed site shall be the owner's responsibility.

2.4 Where the unit is installed in a position that does not allow safe or ready access, the cost of that access, including the cost of additional materials handling and/or safety equipment, shall be the owner's responsibility. In other words, the cost of dismantling or removing cupboards, doors, walls, roofs or trap doors and the cost of any special equipment to bring the unit to floor or ground level or to a serviceable position is not covered by this warranty.

2.5 This warranty only applies to the original and genuine Rheem unit in its original installed location and any genuine Rheem replacement parts. It does not cover any plumbing, gas fitting or electrical parts supplied by the installer, that are not an integral part of the unit, e.g. pipe-work, pressure limiting valve, stop valves, non-return valves, electrical switches, pumps and fuses.

2.6 The Rheem warranty does not cover faults that are a result of:

a) Accidental damage to the unit or any component, for example Acts of God such as floods, storms, fires, lightning strikes and the like and Third party acts or omissions.

b) Misuse or abnormal use of the unit.

c) Installation or use not in accordance with the Owner's Guide and Installation Instructions, New Zealand Building Code requirements or with relevant statutory and local requirements including failure to install a properly drained safe tray where required by the owners guide and installations.

d) Connection at any time to a water supply that does not comply with the water supply guidelines as outlined in the Owner's Guide and Installation Instructions, or poor water quality outside the limits specified in the owners guide and installation instructions.

e) Repairs, attempts to repair or modifications to the unit by a person other than Rheem Service or a Rheem Accredited Service Technician.

f) Faulty plumbing or faulty power supply.

g) Failure to maintain the unit in accordance with the Owner's Guide and Installation Instructions.

h) Transport damage.

i) Fair wear and tear from adverse conditions (for example, corrosion).

j) Cosmetic defects.

2.7 If you require a call out and we find that the fault is not covered by the Rheem warranty, you are responsible for Rheem Service Centre call out costs. If you wish to have the relevant component repaired or replaced by Rheem that service will be at your cost.

2.8 Subject to any statutory provisions to the contrary, this warranty excludes any and all claims however arising including under contract or tort for damage to furniture, carpet, walls, foundations or any other consequential loss or incidental expenses either directly or indirectly due to leakage from Rheem unit, or due to leakage from fittings and/ or pipe work of metal, plastic or other materials caused by water temperature, workmanship or other modes of failure.

2.9 This warranty excludes to the extent permissible all implied warranties set out in the sale of goods act 1908 (New Zealand) and all guarantees set out in the consumers guarantees act 1933 (New Zealand) to the extent that the goods are acquired for the purpose of resupply in trade consumption in the course of a process of production or manufacture or repairing or treating in trade other goods or fixtures on land.

KDC - Approved Building Consent Document - BC210208 - Pg 55 of 197 - 2/07/2021 - ComplyNZ

3. WHAT IS COVERED BY THE RHEEM WARRANTY FOR THE UNITS DETAILED IN THIS DOCUMENT

3.1 Rheem will repair or replace a faulty component of your unit if it fails to operate in accordance with its specifications as follows:

Warranty Cover	**The period from date of installation, in which the fault must appear, in order to be covered**		*Domestic use is defined as; when the appliance is installed in a single family domestic dwelling.
What components are covered	**Domestic use***	**Non-domestic use***	**What coverage you receive**
Mains Pressure**	**Years**		**(Excludes Optima)
All components	1	1	Repair or replacement of failed component, or if necessary, replacement of the complete water heater, free of charge, including labour.
Cylinder only	3	1	Repair or replacement of the complete water heater, free of charge, including labour.
Vitreous Enamel - Cylinder only	7	3	Repair or replacement of the complete water heater, free of charge. Installation and labour cost are the responsibility of the owner.
Stainless Steel - Cylinder only	10	3	
Optima	**Years**		
All components	3	1	Repair or replacement of failed component, or if necessary, replacement of the complete water heater, free of charge, including labour.
Cylinder only	5	1	Repair or replacement of the complete water heater, free of charge, including labour.
Cylinder only	10	5	Repair or replacement of the complete water heater, free of charge. Installation and labour cost are the responsibility of the owner.

4. ENTITLEMENT TO MAKE A CLAIM UNDER THIS WARRANTY

4.1 To be entitled to make a claim under this warranty you need to:

a) Be the owner of the unit or have consent of the owner to act on their behalf.

b) Contact Rheem New Zealand Limited Service Department without undue delay after detection of the defect and, in any event, within the applicable warranty period.

c) Return the faulty component or unit as directed by the Rheem New Zealand Limited Service Department.

4.2 You are **not** entitled to make a claim under this warranty if your unit:

a) Does not have its original serial numbers or rating labels.

b) Is not installed in New Zealand.

5. HOW TO MAKE A CLAIM UNDER THIS WARRANTY

5.1 If you wish to make a claim under this warranty, you need to:

a) Contact Rheem New Zealand on 0800 657 335 and provide owner's details, address of the unit, a contact number and date of installation of the unit or if that's unavailable, the date of manufacture and serial number (from the rating label on the unit).

b) A Rheem service centre will arrange for the unit to be tested and assessed on-site.

c) If Rheem determines that you have a valid warranty claim, Rheem will repair or replace the unit in accordance with this warranty.

5.2 Any expenses incurred in the making of a claim under this warranty will be borne by you.

KDC - Approved Building Consent Document - BC210208 - Pg 56 of 197 - 2/07/2021 - ComplyNZ

RHEEM SERVICE DEPARTMENT
475 Rosebank Road, Avondale, Auckland

www.rheem.co.nz

FOR SERVICE TELEPHONE
Phone: 0800 657 335
Fax: 09 829 0222
or refer to your local Yellow Pages under "Plumbers"
for your nearest Rheem Service Centre

Figure 13: Bedding and Backfilling
Paragraphs 3.9.2, 3.9.4 and 3.9.5

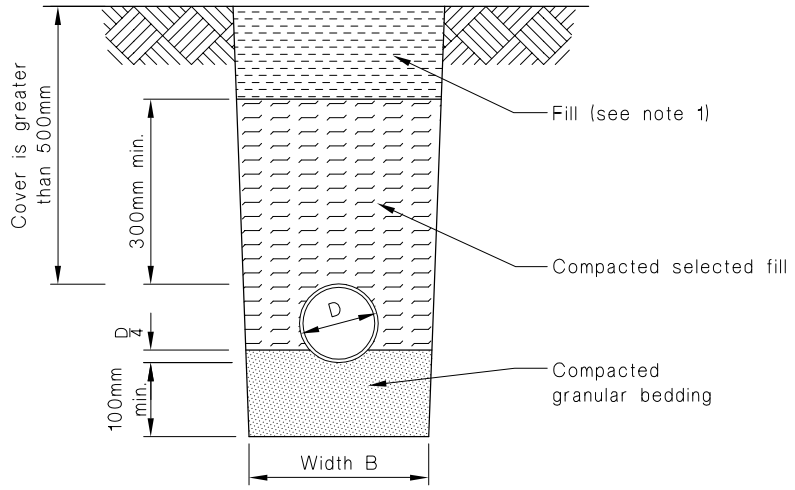

(a) Cover greater than 500 mm
Bedding type 'B' of NZS 4452

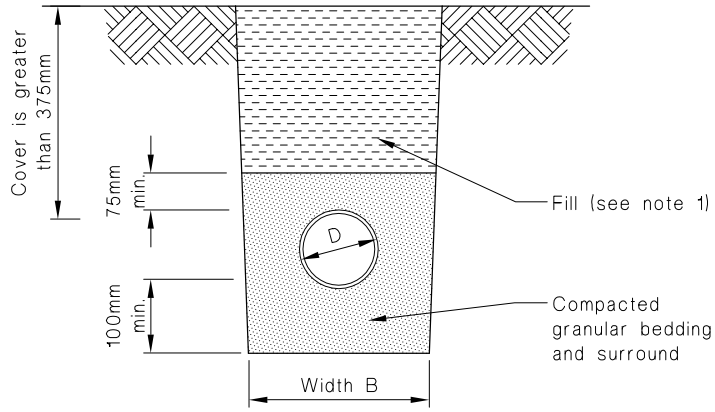

(b) Cover greater than 375 mm
Bedding type 'D' of NZS 4452

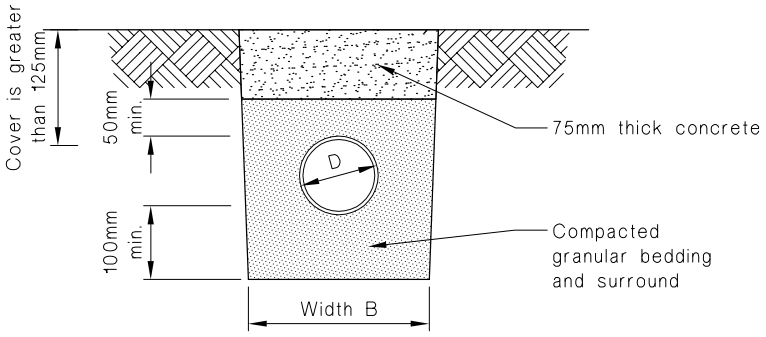

(c) Cover greater than 125 mm

NOTE:
1. Fill shall be:
-Ordinary fill where drains are located below gardens and open country.
-Compacted selected fill where the drains are located below residential driveways and similar areas subjected to light traffic.

Amend 1 Sep 1993

KDC - Approved Building Consent Document - BC210208 - Pg 57 of 197 - 2/07/2021 - ComplyNZ

Amend 1 Sep 1993
Amend 1 Sep 1993
Amend 1 Sep 1993
Amend 1 Sep 1993
Amend 1 Sep 1993

Technical Data Sheet

BRICKWORKS

Product Range: Basics

Product Name: Karekare | **Size:** 230 × 70 × 76mm | **Manufactured:** Australia

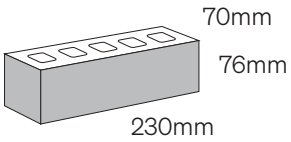

Typical Properties	
Length (mm)	230mm
Width (mm)	70mm
Height (mm)	76mm
Dimensional Category	DW2
Average Weight / Unit (kg)	1.9
Units per Square Metre	48
Pack Size	720
Characteristic Unconfined Compressive Strength (f'uc) MPa	>15
Maximum Cold Water Absorption (%)	<11
Initial Rate of Absorption (IRA) (kg/m^2 min)	1.0 - 4.0
Estimated 15 year Coefficient of Expansion (e'Factor)	<1.0
Core Volume (%)	<25
Liability to Efflorescence	Slight
Lime Pitting Liability	Nil
Solar Absorptance Rating	Light
Light Reflectance Value (LRV)	6.9

KDC - Approved Building Consent Document - BC210208 - Pg 58 of 197 - 2/07/2021 - ComplyNZ

This Data represents average results from commercial production lots.
If specific test results are required, sample should be taken from current production lots.
AUSTRALIAN STANDARD TEST METHODS AS/NSZ 4456 ARE USED AS APPLICABLE.
October 2020

australbricks®

KDC - Approved Building Consent Document - BC210208 - Pg 59 of 197 - 2/07/2021 - ComplyNZ

BRANZ Appraised

Appraisal No. 928 [2016]

GIB EZYBRACE® SYSTEMS 2016

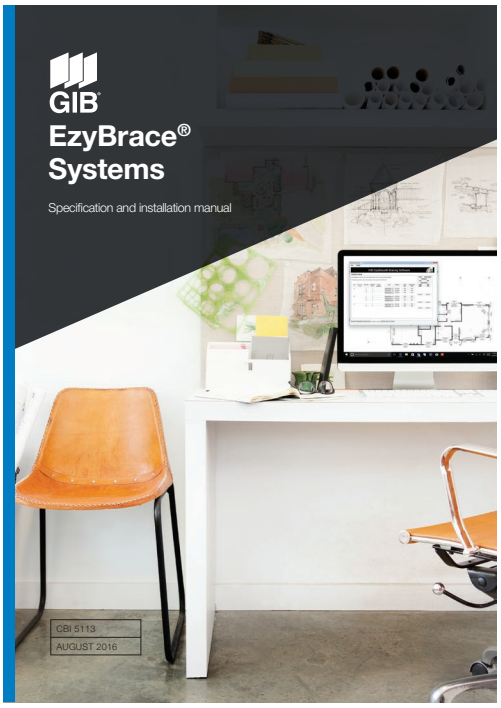

Appraisal No. 928 (2016)

BRANZ Appraisals

Technical Assessments of products for building and construction.

Winstone Wallboards Ltd
PO Box 12 256
Penrose
Auckland 1642
Tel: 09 633 0100
Fax: 09 633 0101
Helpline Tel: 0800 100 442
Helpline Fax: 0800 229 222
Web: www.gib.co.nz
Email: info@gib.co.nz

BRANZ
1222 Moonshine Rd,
RD 1, Porirua 5381
Private Bag 50 908
Porirua 5240,
New Zealand
Tel: 04 237 1170
branz.co.nz

Product

1.1 GIB EzyBrace® Systems 2016 are a range of wall and ceiling bracing systems based on the use of GIB® Standard, GIB Braceline® and other GIB® plasterboards. GIB EzyBrace® Systems 2016 are used to resist earthquake and wind loads on timber frame buildings designed and constructed in accordance with NZS 3604 and the GIBFix® Framing System. The GIB EzyBrace® Bracing Software provides an electronic means of calculating bracing demand and resistance.

Scope

2.1 GIB EzyBrace® Systems 2016 and the GIB EzyBrace® Bracing Software have been appraised for the design and use of interior wall and ceiling bracing systems in buildings within the scope limitations of NZS 3604.

Building Regulations

New Zealand Building Code (NZBC)

3.1 **In the opinion of BRANZ, the GIB EzyBrace® Systems 2016, if designed, used, installed and maintained in accordance with the statements and conditions of this Appraisal, will meet the following provisions of the NZBC:**

Clause B1 STRUCTURE: Performance B1.3.1, B1.3.2 and B1.3.4. GIB EzyBrace® Systems 2016 meet the requirements for loads arising from self-weight, earthquake, wind and impact [i.e. B1.3.3 (a), (f), (h) and (j)]. See Paragraphs 8.1 - 8.10.

Clause B2 DURABILITY: Performance B2.3.1 (a) not less than 50 years. GIB EzyBrace® Systems 2016 meet this requirement. See Paragraphs 9.1 - 9.4.

Clause F2 HAZARDOUS BUILDING MATERIALS: Performance F2.3.1. GIB EzyBrace® Systems 2016 meet this requirement and will not present a health hazard to people.

3.2 The bracing demand calculation and bracing distribution rules contained in the GIB EzyBrace® Bracing Software are in accordance with Section 5 of NZS 3604. Bracing resistance is provided by bracing element ratings determined in accordance with NZS 3604, Paragraph 8.3.1.2.

3.3 NZS 3604 is an **Acceptable Solution** for compliance with New Zealand Building Code Clause B1 Structure.

Readers are advised to check the validity of this Appraisal by referring to the Valid Appraisals listing on the BRANZ website, or by contacting BRANZ.

KDC - Approved Building Consent Document - BC210208 - Pg 60 of 197 - 2/07/2021 - ComplyNZ

Technical Specification

4.1 The GIB® plasterboards and accessories used with the GIB EzyBrace® Systems 2016, and supplied or specified by Winstone Wallboards Ltd are as follows:

GIB® plasterboards

- **GIB® Standard** - GIB® Standard plasterboard is a paper-bound fibreglass reinforced gypsum-plaster core sheet lining material. GIB® Standard plasterboard is available in 10 mm and 13 mm thicknesses and a sheet width of 1200 mm and 1350 mm (GIB® Wideline). The sheets have a taper on the two long sheet edges. The 10 mm thick sheets are also available with a square edge. Sheets are available in various lengths from 2400 mm to 6000 mm. The nominal sheet weight is 6.5 kg/m² for 10 mm thick sheets and 8.5 kg/m² for 13 mm thick sheets. GIB® Standard plasterboard face paper is a light buff colour.
- **GIB Braceline®** - GIB Braceline® is a high-density fibreglass reinforced paper-bound gypsum-plaster core sheet lining material. GIB Braceline® is available in 10 mm and 13 mm thicknesses. The sheets have a taper on the two long sheet edges. GIB Braceline® has a sheet width of 1200 mm and 1350 mm, and is available in lengths of 2400 mm, 2700 mm, 3000 mm, 3600 mm and 4800 mm. The nominal sheet weight is 9 kg/m² for 10 mm thick sheets and 12.5 kg/m² for 13 mm thick sheets. GIB Braceline® face paper is a light blue in colour.
- **Alternative GIB® plasterboards** - In certain situations, as specified in the Technical Literature, substitution is permitted with GIB Aqualine®, GIB Fyreline®, GIB Toughline® and GIB Ultraline®.

Components and Accessories

- **GIB® Accessories and GIB® Jointing Compounds** - As specified in the GIB® Site Guide Technical Literature.
- **Fasteners**
  - **GIB Grabber® High Thread Screws for fixing directly to timber** – 32 mm x 6g.
  - **GIB Nail** – 30 x 2.8 mm.
  - **GIB Grabber® screws for fixing to light gauge steel battens** – 32 mm x 6g.
- **Adhesive and Sealants**
  - **GIBFix® One** – an off-white acrylic adhesive supplied in 375 ml cartridges and 600 ml sausages.
  - **GIBFix® All-Bond** – a green solvent-based adhesive supplied in 375 ml cartridges and 600 ml sausages.
- **GIBFix® Framing Components**
  - **GIBFix® Angle** – 45 x 45 x 0.55 mm galvanised steel angle with a knurled surface. Supplied in lengths of 2.4 and 2.7 m.
  - **GIB Grabber® Dual Thread Screws for fixing to timber through GIBFix® Angle** – 32 mm x 7g needle-point screw with coarse thread lower section and fine thread upper section.
- **Fasteners, Anchors and Connections**
  - **GIB® HandiBrac®** – a one-piece, 2 mm thick, galvanised-steel angle bracket approximately 95 mm high, 65 mm long and 54 mm wide. The bracket is supplied with 5 Type 17 screws 14 g x 35 mm.
  - **BOWMAC® screw bolt** – M10 x 140 mm screw anchor, with a blue painted hex-head.
  - **Coach screws** – 12 mm x 150 mm and 50 x 50 x 3 mm washer hot-dipped galvanised for fixing to timber floors.
  - **Cast-in bolts** – M12 x 150 mm minimum and 50 x 50 x 3 mm washers for fixing to concrete floors.
  - **Shot fired fasteners** – minimum 75 mm x 3.8 mm with 16 mm discs for fixing GS1-N, GS2-N and GS2-NOM internal line bracing elements to concrete slabs.
  - **Galvanised or stainless steel strap** – 25 x 0.9 mm top and bottom plate connections.
  - **Strap fixings** – 30 x 2.5 mm hot-dipped galvanised or stainless-steel flat-head nails.

  Note: For corrosion protection requirements refer to NZS 3604: 2011 Section 4.

Readers are advised to check the validity of this Appraisal by referring to the Valid Appraisals listing on the BRANZ website, or by contacting BRANZ.

KDC - Approved Building Consent Document - BC210208 - Pg 61 of 197 - 2/07/2021 - ComplyNZ

- **Ceiling Diaphragms** - Ceiling diaphragms are constructed using timber ceiling battens, or GIB® Rondo® or similar metal ceiling batten systems.
- **Plywood**
  - **Plywood** – minimum of 7 mm thick complying with AS/NZS 2269 D-D Structural Grade.
  - **Plywood fixings** – 50 x 2.5 mm hot-dipped galvanised or stainless-steel annular-grooved, flat-head nails.

Handling and Storage

5.1 The best results are achieved when GIB® plasterboards are treated as a finishing material and protected from damage. Sheets must be stacked flat and kept dry at all times. For limits on stack heights see the GIB® Site Guide. Sheets must be carried on edge and not dragged.

5.2 All accessories must be kept dry.

Technical Literature

6.1 Refer to the Appraisals listing on the BRANZ website for details of the current Technical Literature for GIB EzyBrace® Systems 2016. The Technical Literature must be read in conjunction with this Appraisal. All aspects of design, use, installation and maintenance contained in the Technical Literature and within the scope of this Appraisal must be followed.

Design Information

General

7.1 NZS 3604 provides methods to distribute the bracing elements in walls to resist forces. The use of ceiling diaphragms is defined in the Technical Literature.

7.2 GIB EzyBrace® Systems 2016 are for use in dry, internal situations only.

7.3 GIB EzyBrace® Systems 2016 must not be exposed to temperatures of 52°C or greater for prolonged periods. Refer to appliance and fitting manufacturers for installation details.

GIB EzyBrace® Bracing Software

7.4 The GIB EzyBrace® Bracing Software contains design procedures and an electronic calculation method for bracing demand calculated in accordance with NZS 3604: 2011, Section 5. Floor loadings can be selected in accordance with either NZS 3604, Bracing Demand Tables 5.5 – 5.10 for 2 kPa floor loads or less, or Tables 14.1 – 14.3 for 3 kPa floor loads.

7.5 The bracing demand calculations contained in the GIB EzyBrace® Bracing Software are based on first principles engineering and calculate wind and earthquake demand based on the building parameters entered. Resulting bracing demand calculations are project specific and can differ from values derived using NZS 3604 wind and earthquake demand tables. The GIB EzyBrace® Bracing Software has been assessed as part of this Appraisal.

7.6 The bracing ratings for GIB EzyBrace® Systems 2016 are embedded in the GIB EzyBrace® Bracing Software.

GIBFix® Framing System

7.7 The GIBFix® Framing System utilises GIBFix® Angles fixed at internal corners and at wall/ceiling junctions to reduce the potential for fastener 'popping' and joint cracking due to timber framing movement. The GIBFix® Framing System also offers an alternative arrangement of studs at corners and at intersecting walls to improve insulation and to reduce thermal bridging compared to traditional wall framing layouts. Refer to the Technical Literature for full details.

7.8 Where walls intersect, noggings are required at maximum 900 mm centres to enable fixing of the end stud of the intersecting wall to the main wall framing.

7.9 The GIBFix® Framing System permits the use of a single panel hold-down [e.g. GIB® HandiBrac®] at wall corners and T-intersections for both the across and along bracing directions.

Readers are advised to check the validity of this Appraisal by referring to the Valid Appraisals listing on the BRANZ website, or by contacting BRANZ.

KDC - Approved Building Consent Document - BC210208 - Pg 62 of 197 - 2/07/2021 - ComplyNZ

Framing

7.10 GIB EzyBrace® Systems 2016 can be installed using conventional timber framing layouts or by using the layouts provided in the GIBFix® Framing System. The bracing ratings embedded in the GIB EzyBrace® Bracing Software are equally applicable to both framing options.

7.11 Timber framing grade, spacing and construction must comply with NZS 3604. Timber treatment must comply with NZBC Acceptable Solution B2/AS1.

7.12 Winstone Wallboards Ltd recommends the use of kiln-dried stress-graded framing timber. The minimum actual framing dimensions are 90 x 45 mm for external walls and 75 x 45 mm for internal walls.

7.13 Joints in the top plates of bracing panels must be tied together with 3 kN and 6 kN top plate connectors using 25 x 0.9 mm hot-dip galvanised mild steel strap, 3 nails each side of joint for 3 kN and 6 nails each side of joint for 6 kN.

Bracing System GS2-NOM

7.14 Most GIB EzyBrace® Systems require additional fasteners at the corners to achieve the published bracing ratings. The GS2-NOM system only requires fixings at 300 mm centres around the sheet perimeter.

7.15 Where internal doors penetrate a GS2-NOM bracing element and recessed door jambs are used, the sheets may be adhesive fixed around the door opening with GIBFix® All-Bond, instead of screw fixing. This is designed to reduce fastener 'popping' around internal doors when using grooved door frames. Screw fixing should be used where door frames are to be finished with architraves and the architrave will cover the screws. The adhesive fix option around door openings must not be used with any other GIB EzyBrace® Systems 2016.

Alternative GIB® plasterboards

7.16 On occasions, properties additional to bracing may be required of the plasterboard lining. Refer to Table 1.

BOWMAC Screw Bolts

7.17 When BOWMAC Screw Bolts are used as fixings for external walls with concrete masonry header block foundations, the minimum grout/concrete strength must be as specified in NZS 3604. BOWMAC Screw Bolts may be used in Corrosion Zones B and C as defined in NZS 3604. BOWMAC Screw Bolts may only be used in NZS 3604 Corrosion Zone D where the minimum concrete cover to the bolt is 60 mm. This cannot be achieved with standard 90 mm wide timber framing. An alternative option in this scenario is to use 140 mm wide framing.

Table 1: Permitted Alternatives in GIB EzyBrace® Systems

PERMITTED GIB® plasterboard ALTERNATIVES IN GIB EZYBRACE® SYSTEMS 2016									
GIB Ezybrace® Systems 2016 have been designed and tested using only the products specified. Occasionally additional properties may be required to be provided by a different GIB® plasterboard product. The following table provides acceptable alternative options.									
Specified	Permitted alternative GIB® plasterboard products								
GIB® plasterboard	GIB® Standard	GIB Ultraline®	GIB Braceline/ Noiseline®	GIB Aqualine®	GIB Toughline®	GIB Fyreline®			
						10mm	13mm	16mm	19mm
GIB® Standard	N/A	✓	✓	✓	✓	✓ NOTE 1	✓NOTE 1 and 3		
GIB Braceline®	X	X	N/A	✓ NOTE 2	✓	X	✓NOTES 1, 2 and 3		

- **NOTE 1:** *The fastener type and length and must be as required for the relevant FRR, system but the fixing pattern must be as required for bracing elements.*
- **NOTE 2:** *The bracing element must be 900 mm or longer. Fasteners must be at maximum 100 mm centres to the perimeter of the bracing element. The bracing corner fastening pattern applies to all four corners of the element.*
- **NOTE 3:** *Specify traditional wall framing layout where a Fire Resistance Rating (FRR) is required. See Paragraph 11.4.*

Readers are advised to check the validity of this Appraisal by referring to the Valid Appraisals listing on the BRANZ website, or by contacting BRANZ.

KDC - Approved Building Consent Document - BC210208 - Pg 63 of 197 - 2/07/2021 - ComplyNZ

Structure

Bracing

8.1 The bracing unit (BU) ratings embedded in the GIB EzyBrace® Bracing Software and vary with the wall length.

8.2 The Technical Literature provides comprehensive construction and panel hold-down details. These include bottom plate fixings using anchor screws and cast-in bolts (concrete), coach screws (timber), GIB® HandiBrac® or nailed stud-to-plate straps.

8.3 The bracing units are derived from BRANZ P21 test method based on a wall height of 2.4 m. For greater wall heights the bracing rating is calculated by multiplying the appropriate bracing rating shown in Table 1 by a factor f=2.4 and divided by the wall height in metres. Walls lower than 2.4 m shall be rated as if they were 2.4 m high.

8.4 NZS 3604 limits wall bracing elements to a maximum of 120 BU/m for timber-framed floors and 150 BU/m for concrete floors.

Ceiling Diaphragms

8.5 GIB® ceiling diaphragms are used to space bracing lines further apart than 6 m. The basic shape of a ceiling diaphragm must be square or rectangular and the length must not exceed twice the width.

8.6 For ceiling diaphragms not steeper than 15° and not exceeding 7.5 m in length, any GIB® plasterboard may be used provided the perimeter fixing are at 150 mm centres.

8.7 For ceiling diaphragms not steeper than 45° and not exceeding 7.5 m in length, and for diaphragms not steeper than 25° and not exceeding 12 m in length, any GIB® plasterboard may be used provided the perimeter fixings are at 100 mm centres.

Openings in Bracing Elements

8.8 Small openings of 90 x 90 mm or less may be placed anywhere except within 90 mm of the edge of the bracing element.

Shower Areas

8.9 GIB EzyBrace® Systems 2016 must not be located in shower cubicles or behind baths and the like. GIB EzyBrace® Systems 2016 may be used in water-splash areas provided they are protected as required by NZBC Clause E3 Internal Moisture. Refer GIB Aqualine® Wet Area Systems.

Impact Resistance

8.10 GIB® plasterboards provide adequate resistance to soft body impact, based upon history of use in domestic and light commercial applications.

Durability

9.1 GIB EzyBrace® Systems 2016, including linings and their fixings have a serviceable life of at least 50 years. The ability of the systems to remain durable is dependent on them remaining dry in service, and being maintained in accordance with this Appraisal.

Maintenance

9.2 The building must be maintained weatherproof and GIB® plasterboards must be protected from external and internal moisture in accordance with NZBC Clauses E2 and E3.

9.3 Holes resulting from damage to the lining, up to 100 x 100 mm square, will have no significant effect on the performance of the bracing panel. Such holes may be repaired by patching, stopping and finishing as appropriate. Independent expert advice must be sought to assess the effect and repair of larger areas of damage.

9.4 Bracing elements require no ongoing maintenance, apart from decoration and the repair of any damage.

Readers are advised to check the validity of this Appraisal by referring to the Valid Appraisals listing on the BRANZ website, or by contacting BRANZ.

KDC - Approved Building Consent Document - BC210208 - Pg 64 of 197 - 2/07/2021 - ComplyNZ

Prevention of Fire Occurring

10.1 Separation or protection must be provided to GIB® plasterboard from heat sources such as fire places, heating appliances, flues and chimneys. Part 7 of NZBC Acceptable Solutions C/AS1 – C/AS6 and NZBC Verification Method C/VM1 provide methods for separation and protection of combustible materials from heat sources.

Fire Affecting Areas Beyond the Fire Source

11.1 For Internal Surface Finish properties and Fire Resistance Ratings, refer to BRANZ Appraisal No. 289 [2012] GIB® Fire Rated Systems.

Internal Moisture

12.1 GIB® plasterboard must be used in dry internal situations, and must not be used where likely to be exposed to liquid water, or where extended exposure to humidity above 90% RH is expected, e.g., such as may be expected in sauna rooms, commercial kitchens and the like.

Installation Information

Installation Skill Level Requirement

13.1 Installation of GIB EzyBrace® Systems 2016 must be completed by, or under the supervision of a Licensed Building Practitioner with the relevant Licence Class, in accordance with the Technical Literature and this Appraisal.

General

14.1 GIB EzyBrace® Systems 2016 must be installed in accordance with the Technical Literature. For inspection, reference must be made to the Technical Literature.

Framing

14.2 To achieve an acceptable decorative finish, the GIB® Site Guide specifies that walls must not be lined unless the moisture content of timber framing is less than 18%. Winstone Wallboards Ltd recommends a moisture content of 12% or less where buildings are to be air conditioned, centrally heated or have heat pumps installed.

14.3 Where the GIBFix® Framing System is used, GIBFix® Angles are tacked to the framing with flat-head clouts prior to installation of the GIB® plasterboard.

Cutting

14.4 GIB® plasterboard is easily cut by scoring the face paper with a sharp short-bladed trimming knife, and then snapping the plasterboard away from the cut face and cutting the back paper or by sawing. Use of a metal straightedge facilitates clean straight cuts. Cut edges can be tidied up by using a knife. Paper dags should be removed.

Hold-downs

14.5 GIB EzyBrace® Systems 2016 which require hold-downs must either have a GIB® Handibrac® fitted to each end of the bracing element or alternatively a metal stud-to-plate strap and hold-down anchor may be used. Refer to the Technical Literature for full installation details. Where a metal stud-to-plate strap is used, the hold-down anchor must be placed no more than 80 mm from the end of the bracing element.

14.6 Where the GIBFix® Framing System is used, a single hold-down located at a wall intersection may be used to provide the hold-down in both the across and along bracing directions.

Readers are advised to check the validity of this Appraisal by referring to the Valid Appraisals listing on the BRANZ website, or by contacting BRANZ.

KDC - Approved Building Consent Document - BC210208 - Pg 65 of 197 - 2/07/2021 - ComplyNZ

Plasterboard Sheet Fixing

14.7 Corner fixings must be 50 mm away from the sheet corner. Fixings must be no closer than 12 mm from the paper-bound sheet edge, and no closer than 18 mm from a cut edge, and driven at right angles to the sheet until the head is seated in a slight dimple just below the surface of the paper liner. Fixings must not be over-driven.

14.8 Wall bracing plasterboards (except for those used with the GS2-NOM system) are fixed at 150 mm centres around the perimeter framing of the bracing element *(Note variation for GIB Aqualine® and GIB Fyreline® - see Table 1)*. At the corners of the wall bracing elements, a special fastening pattern is required with fasteners spaced at 50 mm, 100 mm, 150 mm, 225 mm and 300 mm from the corner and there-after at 150 mm centres. Fixing to other framing is either mechanical or by using GIBFix® adhesives.

14.9 When installing GS2-NOM bracing elements, the GIB® plasterboard is fixed to framing around the bracing element perimeter and at sheet joints with fasteners at maximum 300 mm centres. Where recessed door jambs are used on internal door frames, the GIB® plasterboard may be fixed to the framing around the door opening with GIBFix® All-Bond. See Paragraph 7.15.

14.10 Where GIB Aqualine® or GIB Fyreline® substitutes for GIB Braceline®, bracing elements must be longer than 900 mm and the bracing element perimeter fasteners must be spaced at 100 mm centres and the corner pattern described in Paragraph 14.8 used.

14.11 Full sheets must be used wherever possible.

Fire Resistance Rated Bracing Elements

14.12 Where a bracing element is also used as a fire-rated element, the method of fixing (including the length of the fixing specified) for the fire-rated element must be used, but the perimeter fixings of the bracing element must be at 150 mm centres and fixings at corners of the bracing element must be fixed as described in Paragraph 14.8. In two-layer systems the inner layer must be used for bracing.

Plywood Fixing

14.13 Plywood is nail fixed at 150 mm centres around the perimeter of each sheet and at 300 mm centres to intermediate framing.

Ceiling Diaphragms

14.14 All GIB EzyBrace® System 2016 ceiling diaphragms require fixings around the perimeter at 100 or 150 mm centres, depending on the ceiling pitch and length. See Paragraphs 8.4 to 8.6 and refer to the Technical Literature.

14.15 The perimeter of the ceiling diaphragm is fixed to GIBFix® Angles, GIB® Rondo® perimeter channels, or alternatively, to an additional ex 150 x 40 mm timber plate fixed to the top plate.

Jointing and Finishing

14.16 All bracing element joints must be reinforced with GIB® tape and finished in accordance with the GIB® Site Guide.

Health and Safety

15.1 Dust resulting from the sanding of stopping and finishing compounds may be a respiratory irritant, and the use of a suitable facemask is recommended.

Readers are advised to check the validity of this Appraisal by referring to the Valid Appraisals listing on the BRANZ website, or by contacting BRANZ.

KDC - Approved Building Consent Document - BC210208 - Pg 66 of 197 - 2/07/2021 - ComplyNZ

Basis of Appraisal

The following is a summary of the technical investigations carried out:

Tests

16.1 Bracing tests were carried out by Winstone Wallboards Ltd in accordance with BRANZ Technical Paper P21 to determine the performance of GIB EzyBrace® Systems 2016 when the building is subjected to lateral wind or earthquake loading. Nail and screw slip tests were carried out by BRANZ and Winstone Wallboards Ltd. The Winstone Wallboard's test facilities, procedures and results have been reviewed by BRANZ and found to be satisfactory.

Other Investigations

17.1 The GIB EzyBrace® Bracing Software has been assessed by BRANZ and found to be satisfactory.

17.2 The GIB EzyBrace® Systems 2016 and GIB® Site Guide Technical Literature have been examined by BRANZ and found to be satisfactory.

17.3 Site visits were carried out by BRANZ to assess the practicability of the installation of the systems, and to view completed installations.

17.4 An assessment was made of the durability of the systems by BRANZ technical experts and found to be satisfactory.

17.5 The properties of Winstone Wallboards Ltd GIB® plasterboards have been assessed for the following properties: MOR, MOE, paper tensile strength, paper shear strength, nail pull resistance, Hunter hardness, inspection for fungal spores, hard and soft body impact tests.

Quality

18.1 Winstone Wallboards Ltd's manufacturing process and details of the quality and composition of the materials, have been examined by BRANZ and found to be satisfactory.

18.2 The quality management systems of Winstone Wallboards Ltd have been assessed and registered by TELARC as meeting the requirements of ISO 9001, Registration No. 581.

18.3 Winstone Wallboards Ltd is responsible for the quality of the product supplied.

18.4 The quality of the application and finish on site is the responsibility of the installation and stopping contractors.

18.5 Designers are responsible for the design of buildings.

18.6 Building owners are responsible for the maintenance in accordance with the instructions of Winstone Wallboards Ltd.

Sources of Information

- AS/NZS 2269.0:2012 Plywood - Structural - Specifications
- AS/NZS 2588: 1998 Gypsum plasterboard.
- BRANZ Technical Paper P21: 2010 A wall bracing test and evaluation procedure.
- NZS 3604: 2011 Timber-framed buildings.
- Ministry of Business, Innovation and Employment Record of Amendments for Compliance Documents and Handbooks.
- The Building Regulations 1992.

Readers are advised to check the validity of this Appraisal by referring to the Valid Appraisals listing on the BRANZ website, or by contacting BRANZ.

KDC - Approved Building Consent Document - BC210208 - Pg 67 of 197 - 2/07/2021 - ComplyNZ

In the opinion of BRANZ, GIB Ezybrace® Systems 2016 is fit for purpose and will comply with the Building Code to the extent specified in this Appraisal provided it is used, designed, installed and maintained as set out in this Appraisal.

The Appraisal is issued only to Winstone Wallboards Ltd, and is valid until further notice, subject to the Conditions of Appraisal.

Conditions of Appraisal

1. This Appraisal:
   a) relates only to the product as described herein;
   b) must be read, considered and used in full together with the Technical Literature;
   c) does not address any Legislation, Regulations, Codes or Standards, not specifically named herein;
   d) is copyright of BRANZ.
2. Winstone Wallboards Ltd:
   a) continues to have the product reviewed by BRANZ;
   b) shall notify BRANZ of any changes in product specification or quality assurance measures prior to the product being marketed;
   c) abides by the BRANZ Appraisals Services Terms and Conditions.
   d) Warrants that the product and the manufacturing process for the product are maintained at or above the standards, levels and quality assessed and found satisfactory by BRANZ pursuant to BRANZ's Appraisal of the product.
3. BRANZ makes no representation or warranty as to:
   a) the nature of individual examples of, batches of, or individual installations of the product, including methods and workmanship;
   b) the presence or absence of any patent or similar rights subsisting in the product or any other product;
   c) any guarantee or warranty offered by Winstone Wallboards Ltd.
4. Any reference in this Appraisal to any other publication shall be read as a reference to the version of the publication specified in this Appraisal.
5. BRANZ provides no certification, guarantee, indemnity or warranty, to Winstone Wallboards Ltd or any third party.

For BRANZ

Chelydra Percy
Chief Executive

Date of Issue:
05 September 2016

Readers are advised to check the validity of this Appraisal by referring to the Valid Appraisals listing on the BRANZ website, or by contacting BRANZ.

KDC - Approved Building Consent Document - BC210208 - Pg 68 of 197 - 2/07/2021 - ComplyNZ

Master Brick & Blocklayers®

Brick Veneer Best Practice Guide

March 2021

KDC - Approved Building Consent Document - BC210208 - Pg 69 of 197 - 2/07/2021 - ComplyNZ

Preface

This document is the result of a collaboration between the collective of Brick & Blocklayers associations within New Zealand and the manufacturing and distribution sector under the guise of the 'Master Brick & Blocklayers of New Zealand.

Since 1991, New Zealand has had a 'performance based' Building Code in place. What this means is that there is no set, one way that buildings within New Zealand MUST be built but instead focus is placed on how a building should perform once built.

The Ministry of Business, Innovation and Employment (MBIE) provides to the industry a set of 'Acceptable solutions' as a means of complying with the Building Code. These documents however are not compulsory and at times the Best Practice Guide for Brick Veneer makes recommendations that are not part of, or contradict the Acceptable solutions. In these areas, we have endeavoured to point you towards information or independent study reports that show that these 'alternative solution proposals' should also meet the performance requirements of the NZ Building Code.

As an Industry, we believe that we also need to consider Workmanship Quality with our guidance. Workmanship Quality describes the brick work that is not related to building performance but the aesthetic finish that customers expect from Brick work.

An acceptable Workmanship Quality standard has been met if a brick veneer has been laid to meet the performance requirements of the Building Code and achieves no visible defects when viewed by a 6.1m with diffused light viewing distance as per manufacturer's specifications. This may be achieved without meeting all of the tolerances contained within this Best Practice Guide.

It is recommended, when planning the design of a Brick Veneer that you engage a bricklayer early on for their knowledge of design and product.

Master Brick & Blocklayers asks that you consider engaging the products and services of our members who have contributed and made this document possible.

Master Brick & Blocklayers

THE BRICK CAVITY

KDC - Approved Building Consent Document - BC210208 - Pg 70 of 197 - 2/07/2021 - ComplyNZ

The brick cavity has meant that most brick homeowners' managed to avoid owning a leaky home

Designing and building brick cavities

A ‘cavity’ or ‘cavity gap’ is an area of space between the timber framing and the brick veneer that enables sufficient airflow and drainage to dry any moisture that may penetrate the brick veneer.
Without a cavity, any moisture would be trapped between the brick and timber and may cause the timber to rot which has been the case with other cladding products, particularly prior to 2004 resulting in ‘leaky home syndrome’.

CAVITY WIDTH
Unless a building consent states otherwise, a cavity should be between **40–75mm** to comply with
E2/AS1 which is the acceptable solution for claddings.
Designers and bricklayers should familiarise themselves with Section 9.2.6 Cavities and review Figure
73Dof E2/AS1. You can read this documentation here: E2/AS1 (part4).
It is important to remember that measurements for cavities are taken from the point where the brick tie is secured to the framing (which may not necessarily be the line of the supporting structure).
The cavity width should be clearly marked on all working drawings.
Master Brick & Blocklayers recommends that cavity gaps are designed to a 50mm cavity.
This provides a 10mm tolerance for variations in the framing or slab and accommodates should plywood bracing be a requirement. E2/AS1 allows for a maximum overhang of 20mm.

KDC - Approved Building Consent Document - BC210208 - Pg 71 of 197 - 2/07/2021 - ComplyNZ

SLAB RECESSES

As a further weather tight design precaution brick veneers should be designed and constructed with a slab recess. This means that the veneer should be extended below the final floor level to ensure that any moisture that penetrates the cavity drains past the flooring level and out through the weep holes. This is intended to prevent moisture from potentially pooling and running to the inside of the dwelling.

Designers and Bricklayers should familiarise themselves with Section 9.2.5 and Figure 73DofE2/AS1 for options of slab recess. You can read this document here: E2/AS1 (part4)

E2/AS1 requires a step down of 50mm or more.

Master Brick & Blocklayers recommends a step down of 90-100mm and the placement of a sloping fillet at the base of the cavity to direct water to the outside.

DAMP PROOFING OF SLAB RECESSES

The slab edge and the bottom of the cavity should be sealed to prevent any moisture sitting in the bottom of the cavity from entering the dwelling.

E2/AS1 requires that damp proofing material be either:

Rebates lower than the ground; or

Two coats of a bituminous liquid; or

1mm of butyl rubber or bituminous sheet; or

0.25mm polythene or polyethylene damp proof membrane.

If the rebate is above ground level then either 1mm of butyl rubber or bituminous sheet or 0.25mm polythene or polyethylene damp proof membrane are the only options available.

WIDTH OF SLAB RECESSES

The width of the recess at the base of the veneer, where the brick sits upon, is governed by three factors:

The desired cavity width;

The width of the brick;

The amount, if any, that the brick will overhang the foundation.

If the brick product has not yet been selected, or if it is subject to change then it is important to ensure that this ledge is designed with flexibility.

Master Brick & Blocklayers recommends designing a 120mm wide ledge and planning to overhang the brick 10mm to provide a drip edge.

ENSURING THE CAVITY IS CLEAR

A clean cavity, free of mortar bridging the gap, is essential for preventing moisture transference. NZS4210:2001 Section2.7.1.7 advises that mortar should not encroach into the cavity more than 5mm.

Master Brick & Blocklayers recommends specifying and installing 'wash-outs'. A 'wash-out' involves laying every corner brick and every subsequent brick at 800mm centres on a bed of sand (thus coinciding with weep hole requirements). Once the veneer is approximately 800mm high, these bricks are removed to facilitate the regular washing out of mortar at the base of the cavity.

Master Brick & Blocklayers

MORTAR

KDC - Approved Building Consent Document - BC210208 - Pg 72 of 197 - 2/07/2021 - ComplyNZ

Mortar is used to hold bricks together and fill and seal any gaps around them. Basically mortar used in brick veneer is a mixture of sand, cement, ad mixture and water. It is however critical that the components of mortar are properly proportioned and mixed correctly.

MIXING MORTAR

For brick veneer to function correctly it is important that the bricks are stronger than the mortar. This will ensure that in the event of seismic activity the tensile bond strength or adhesion of the mortar will fracture rather than the bricks themselves.

NZS4210:2001 provides for a strength requirement for structural masonry but not for brick veneer and states that mortars for veneers shall follow the strength requirement of the masonry suppliers.

In 2011 BRANZ released SR258 – Critical properties of Mortar for good seismic performance of brick veneer.
You can read this report here:
http://www.branz.co.nz/cms_show_download.php?id=8270db8e7e10636a60e5faedc2cd280ee6041b62

This research indicates that mortar strength should be at least 6MPa and advises that this can be achieved with mortar mixes of 4:1 sand to cement.
A hydration process occurs between the water and cement which causes the cement to harden and bind with the sand and therefore cause the mortar to 'set'. If the mortar shows signs of powdering that may mean that hydration has not occurred properly and the resulting veneer will need to be pulled down.
One of the most common causes of mortar powdering is rapid loss of moisture when the bricks are first laid. If the temperature exceeds 27 degrees Celsius then it is important to ensure that the bricks are kept damp for the first 24 hours.
In summer any mortar which is more than 1.5 hours old should be discarded and for temperatures below 5 degrees Celsius mortar should be discarded after 2 hours.
NZS4210:2001 Section 2.2.2.2(e) advises that bricklayers should avoid re-tempering mortar with water.
Mixing good mortar is a skill obtained through experience. Mixing times, humidity levels and even the type of sand used can all have an effect on the final product. Bricklayers should consider using bagged mortar for quality control issues and to obtain compliant mortar strength.
Chemical admixture shall comply with NZS 3113:1979 or AS 1478.1:2000 Admixtures shall be dosed in accordance with the manufacturer's instructions.
Master Brick and Blocklayers ask that if you do use bagged mortar that you support our manufacturing members:
Dricon (Firth)
http://www.firth.co.nz/product-information/dricon/dricon-product-range/trade-mortar.aspx

Master Brick & Blocklayers

MORTAR JOINTS

KDC - Approved Building Consent Document - BC210208 - Pg 73 of 197 - 2/07/2021 - ComplyNZ

'Mortar joint' is the term for the space of mortar between bricks. According to NZS4210:2001 the average thickness of a mortar bed, cross or perpend joint should be 10mm +/- 3mm. A joint thickness of up to 20mm may be accepted on the bottom course to accommodate any slab level issues.
While the thickness of mortar needs to ensure that an adequate seal and bond is achieved, the mortar joint itself also provides an aesthetic value to the brick veneer. Different looks and weather tight properties can be achieved by creating different patterns in the mortar joint.
Varying mortar joint styles are created by bricklayers by running jointers, rakes or beaders across the mortar before it sets to achieve the desired look.
The most common mortar joint types are – grooved, weathered, 'V', raked, extruded or flush.

GROOVED JOINT – Also known as Concaved or rolled. This type of joint is formed by using a curved steel jointing tool. Its recessed profile and tight seal mean that it is very effective at resisting moisture penetration. This type of joint can be good for hiding small irregularities.
Should be tooled to a maximum depth of 6mm after initial stiffening has occurred. The delay of tooling is vital if a tight weatherproof joint is to be produced in horizontal but particularly, vertical joints. It is recommended that all slurry coated bricks should use a grooved joint.

WEATHERED JOINT – The mortar forms a joint that is recessed from the bottom to the top. This type of joint can give brickwork a neat, ordered appearance. While not as weathertight as Grooved and 'V' joints, it can be used on external walls and should be tooled to after initial stiffening has occurred. The delay of tooling is vital if a tight weatherproof joint is to be produced in horizontal but particularly, vertical joints.

'V' JOINT – This type of joint is formed with a V-shape jointer (or trowel). This type of joint can be good for hiding small irregularities. This joint has good weathertight properties. Should be tooled to a maximum depth of 6mm after initial stiffening has occurred. The delay of tooling is vital if a tight weatherproof joint is to be produced in horizontal but particularly, vertical joints.

RAKED JOINT – For this type of joint the mortar is raked out and once pointed and tooled shall not exceed a maximum depth of 6mm. It is important to compact the mortar to improve its weather tight performance, this design creates a form of ledge where water can pool.

EXTRUDED JOINT – This type of joint is formed without tooling. It is caused naturally as excessive mortar squeezes out between the bricks. Exposure to weather may degrade an Extruded joints appearance.

FLUSH JOINT – Master Brick & Blocklayers does not recommend the use of flush joints unless they are compacted. If the mortar is flush jointed and not compacted it can lead to the following issues:

- When veneer is to be honed, the mortar can 'flick' out with honing process.
- When brick is to be plastered it can lead to hairline cracking in the plaster where the outline of the brick can be seen.

The type of brick selected plays a part in which type of mortar joint will work best. Straight edged bricks with a 'Vitratectm 'or 'slurry' coat must use grooved (rolled) joints whereas colour through bricks with rumbled edges are better with raked joints.
It is important to adhere to the recommendations of your brick manufacturer when deciding on which type or mortar joint to use.

KDC - Approved Building Consent Document - BC210208 - Pg 74 of 197 - 2/07/2021 - ComplyNZ

Master Brick & Blocklayers

BRICK TIES

KDC - Approved Building Consent Document - BC210208 - Pg 75 of 197 - 2/07/2021 - ComplyNZ

Brick ties provide strength and flexibility to brick veneer.

Brick tie secured to framing

Dry tie bedding

Brick Tie

As the name suggests, a brick tie is a connector that ties the brick veneer to the structural framing of a building. This feature both prevents the bricks from simply falling away from the framing and they also increase the strength of the brick veneer by transferring some of the force away from the brick and on to the structural element.

BRICK TIE DURABILITY

As brick ties are considered a structural element they are required under the New Zealand Building Code to have a 50 year durability.

If a building is within 500m of the high water mark or within 100m of a tidal estuary (also known as the 'sea spray zone') then stainless steel brick ties will be required. If you are unsure of this then we recommend talking with your local council before commencing design or construction work.

BRICK TIE LENGTH

The length of the brick tie is dependent on two factors– the width of the brick cavity and the width of the brick being laid.

Brick ties generally come in four sizes– 85mm, 105mm, 115mm and 135mm.

To determine the minimum tie length required you need to ensure that the tie can sit flush with the framing and reaches at least half way across the width of the brick.

For example: If your cavity was 50mm and your brick was 70mm wide then you would need to ensure that a 85mm brick tie was used (50mm+35mm).

BRICK TIE INSTALLATION

Brick ties must be screw tied using a 35mm X12g screw and must be installed with a 5 degrees slope down from the frame. The slope ensures that any water is moved away from the framing.

KDC - Approved Building Consent Document - BC210208 - Pg 76 of 197 - 2/07/2021 - ComplyNZ

BRICK TIE BEDDING

Brick ties are required to be bedded into the brick with mortar. You need to ensure that there is a minimum mortar cover of 15mm of the end of the tie.

There are two trade practices for the bedding of brick ties. Wet-bedding is the process where the brick tie is held with a layer of mortar both above and below the tie. With dry-bedding the brick tie is placed directly on top of the brick and mortar is only placed on the top of the tie.

Tie bedding is an area of the trade where regulation has not kept up with building science. The current acceptable solutions for tie bedding are:

On timber framing E2/AS1 requires wet-bedding

On concrete block work E2/AS3 allows for either bedding methods.

In general, bricklayers prefer to dry-bed brick ties. This is because it is a more efficient, productive and a proven method of installation. In 2006 BRANZ released a report that confirms that dry bedding is an acceptable procedure in brick veneer construction. You can read a copy of this report here: BRANZ DryBeddingMasonry Ties StudyReportno156:2006

Master Brick & Blocklayers Association recommends that designers ensure they specify dry-tie bedding until NZS4210:2001 is updated. This may mean that you will need to identify your building consent application as an alternative solution proposal–were commend including the above reference to the BRANZ study report.

BRICK TIE PLACEMENT

Brick veneer is not assumed to have any structural strength and relies on support from the ties securing it to the structural timber framing. The ties themselves are designed to support a certain tributary area of masonry and it is important that the area per tie is not exceeded. The bottom brick tie, when the rebate is sealed with a liquid applied damp –proof course, must be within 300mm or two courses (whichever is smaller) of the base of the veneer. Brick ties are to be fixed to studs only with a maximum of 600mm centres horizontally and a maximum of 400mm vertically. Ties should also be positioned within 300mm horizontally of openings (BBFNZ recommends 200mm vertical spacing to meet the 220kg/m2 mass requirement in any seismic zone)

Designers and bricklayers should familiarise themselves with Section 9.2.7 Wall Ties and Tables 18A and 18B of E2/AS1. You can read this documentation here: E2/AS1 (part4)

Master Brick & Blocklayers Association ask that when selecting brick ties that you support our manufacturing members:

INNOVATIVE BUILDING PRODUCTS LTD– www.brickties.co.nz

KDC - Approved Building Consent Document - BC210208 - Pg 77 of 197 - 2/07/2021 - ComplyNZ

The way that bricks are arranged affects a veneers stability and strength and is referred to as a 'bond' or 'bonding'.

Brick Bonds

The way that bricks are arranged affects a veneers stability and strength and is referred to as a 'bond' or 'bonding'.

RUNNING OR STRETCHER BOND

Section 9.2.2 of E2/AS1 requires that bricks are laid with a 'running bond' (also referred to as 'stretcher bond'.

To maintain a running or stretcher bond, bricks of each course must overlap the previous course by between 25% and 75% of the length of the bricks (NZS4210:2001 Section 1.3 Definitions).

A bond pattern should be consistent throughout the veneer.

BRICK CUTTING

To achieve a stretcher or runner bond and meet industry aesthetic standards, the minimum size a masonry unit should be cut to is the greater of: ¼ the length of the units or the width of the units.

The practice of brick cutting should comply with the Master Brick and Blocklayer Practice Advisory – Brick and Block cutting: https://staging5.nzmta.com/wp-content/uploads/2021/03/practice-advisory-brick-and-block-cutting-mbb-4.pdf

MININUM WALL OR PANEL WIDTH.

Section 9.2.3 of E2/AS1 advises that no length of veneer wall or panel can be less than 230mm.

If the wall or panel turns (usually 90°) then this is usually referred to as a return. The measurement of a return is taken as the total length of the wall rather than treating the wall as two separate panels.

INTERNAL CORNERS

An internal corner should mirror an external corner as closely as possible. To meet industry standards and avoid the appearance of an undersized cut masonry unit, the length of the masonry unit visible in an internal corner should be the greater of: ¼ the length of the unit or the width of the unit.

Master Brick & Blocklayers®

STACKBONDING

Stackbonding provides the ability to create a brick cladding that presents both vertical and horizontal lines and patterns that add new dimensions to the aesthetic appeal of the veneer.

Stackbonding is not recognised under the acceptable solution for brick veneers (E2/AS1) and therefore requires specific engineering design.

To assist with the design of stack bonded systems, the New Zealand Concrete Masonry Association (NZCMA) has released design guidance that provides the following specification and limitations for stackbond use:

Studs are to be positioned at a maximum 400mm centers.

Screwfixed brick ties are to be installed at maximum 400mm centers horizontally and 400mm centers vertically (every 4th course commencing at two courses above the base or equivalent in the case of a double height brick)

In-joint reinforcement is to be installed every 4th course (or maximum of 400mm) alternating with the rows of brick ties.

The maximum permitted height is 4.0m unless Specific Engineering Design has been undertaken to cover the additional required height specified.

You can read this information here: NZCMA informationonstackbondingdesign

KDC - Approved Building Consent Document - BC210208 - Pg 78 of 197 - 2/07/2021 - ComplyNZ

KDC - Approved Building Consent Document - BC210208 - Pg 79 of 197 - 2/07/2021 - ComplyNZ

A good bricklayer carefully plans their work prior to laying. This involves:

- Carefully reading **ALL** building consent documents and familiarising themselves with any standard cited in the documents before starting,
- Checking that the substrate has been properly prepared and sealed where required,
- Calculating how many bricks are going to be required (and ensuring that factors such as mortar thickness are taken into account),
- Checking the bricks supplied are correct as per the building consent and contract,
- Checking that there are no obvious issues/defects with the brick pallets provided,
- Checking that all pallets display the same batch number
- Identifying what cuts may be required.

Bricks should be laid to a straight line which generally involves running a string line at both ends of the wall. Bricks should be buttered to form perpends ("perps").

NZS4210:2001 sets out the following tolerances for brick veneers walls:

Item	Tolerance
Deviation from vertical within a storey	10 mm per 3m of height
Deviation from vertical in total height of bldg.	20 mm
Relative vertical displacement between masonry courses.	5mm on structural face
Deviation from line in plan:	
(a)In any length up to 10m	5mm
(b) In any length over 10m	10 mm total
Average thickness of bed joint, cross joint or perpend joint.	10mm+/-3mm on thickness specified
Tolerances cannot breach minimum cavity width requirements.	

BRICK BLENDING

Bricks are natural products that are subject to colour variance between batches. 'Blending' is the process used to vary brick pallets as they are laid as a means of avoiding any unwanted patterns caused by a variance.

Master Brick & Blocklayers recommends that bricklayers select bricks and blend vertically from at least three pallets in order to achieve an adequate colour mix.

A bricklayer should also regularly check the veneer while laying from a viewing distance of 6.1m for obvious pockets of colour forming that may be unacceptable.

KDC - Approved Building Consent Document - BC210208 - Pg 80 of 197 - 2/07/2021 - ComplyNZ

Air flow and drainage are essential design features that ensure dry homes.

Weep holes and Vents

Weep holes and vents are components of brick design intended to assist with drainage and airflow within the brick cavity.

WEEP HOLES

It is important to remember that while brick veneers are an excellent rain shield, they are not waterproof. A considerable amount of water would be required before moisture is likely to flow down the back of the veneer.

In the event that this saturation does occur, a series of gaps or 'weep holes' are required to be placed along the bottom course.

A weep hole of 75mm x 10mm is required to be placed every 800mm along the base or alternatively 1000mm2/linear meter of wall.

Any weep hole wider than 13mm requires vermin proofing.

Weep hole requirements also need to be met across the heads of doors, windows and openings.

VENTS (VENTILATION)

Ventilation is the process of replacing air in any space with the intention of improving air quality. For the brick cavity this means replacing moist air within the cavity with drier air from the outside.

E2/AS1 provides two acceptable methods for venting brick veneer:

- Vertical vents installed as per the earlier weep holes; or
- Leaving a 5mm gap around the top of the veneer.

You can view these E2/AS1 requirements in Section 9.2.6(d) and Figure 73E here: E2/AS1 (part4).

Master Brick & Blocklayers recommends that if you are installing vertical vents that you install these in the second brick from the top.

This ensures that the bond of the bricks on the top row is not weakened.

Vent holes are generally not required under window sills as air can move freely around the frame.

Master Brick & Blocklayers recommends that where windows exceed 2.4m in length that 1 or 2 vent holes are evenly spaced under the sill.

PLASTERED OR PAINTED BRICK VENEER

Where a brick veneer is plastered or painted, the brick veneer exterior cladding is effectively a waterproof system. This means the need to have air circulation to dry the cavity and the weep holes to drain the veneer become less important.

The acceptable approach to weep holes in this scenario is 50mm x 10mm weep holes at 1m centres or 500mm2/linear meter of wall.

Vent holes are still required at the top of the plastered or painted veneer however designers should check with their local council as requirements vary.

Master Brick & Blocklayers ask that when selecting vents that you support our members: Victor

Vents: http://www.victorvents.co.nz/

KDC - Approved Building Consent Document - BC210208 - Pg 81 of 197 - 2/07/2021 - ComplyNZ

KDC - Approved Building Consent Document - BC210208 - Pg 82 of 197 - 2/07/2021 - ComplyNZ

It is the bricklayer's responsibility to ensure that all flashings have been correctly installed prior to the bricks being laid.

Brick veneer flashings

A flashing is an impervious material designed to prevent water from entering the brick cavity from joints such as those found in windows and doors.

The brick veneer system has functioned in New Zealand very successfully for many years with minimal flashings being installed; however, in the modern environment, flashings are an essential part of any cladding systems.

Designers and bricklayers should familiarise themselves with Figure 73 Cof E2/AS1 which can be viewed here: E2/AS1 (part4)

It is the bricklayer's responsibility to ensure that all flashings have been correctly installed prior to the bricks being laid.

HEADFLASHINGS

If a metal head flashing is used and fixed to the framing, you should ensure it is kept 5mm short at each end and the ends of the flashing should be turned up. This will allow for any movement in the framing without interfering with the bricks.

A 5-10mm gap between the underside of the lintel bar and the flashing allows for both drainage and ventilation eliminating the need for weep holes in the bricks across the head of the opening.

JAMB FLASHINGS

Jamb flashings are simple and inexpensive. Use a 200mm wide polyethylene flashing, tucked into the joinery flange. The open end of the flashing is to be held off the building wrap using a kick-out batten or protruding clouts. The junction between the bricks and the joinery does not need to be sealed.

SILL FLASHINGS

Any moisture being driven up the sill brick needs to be stopped from reaching the timber framing and redirected into the bottom of the cavity. NZS 3604S11.7.7 requires that flashings be extended

200mm past the sides of any openings where practical to do so.

KDC - Approved Building Consent Document - BC210208 - Pg 83 of 197 - 2/07/2021 - ComplyNZ

Brick Sill

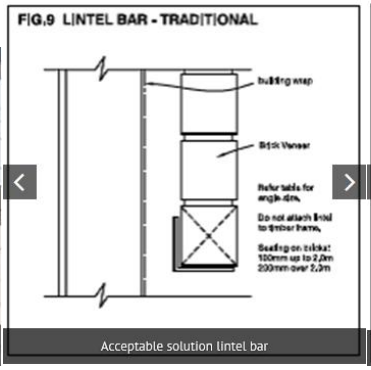

Acceptable solution lintel bar

Proposed alternative solution lintel bar

Designing and Constructing Brick Sills and Lintel Bars

BRICK SILLS

Brick sills must overhang the brick work below by 30 - 50mm with a minimum slop of 15 degrees. Bricks must be evenly spread and of equal thickness across the width of the sill.

Another option is to have a header course spread evenly over the sill width. This applies to the heads of the windows as well.

LINTEL BARS

A lintel bar is a load-bearing building component that spans across openings such as windows and doors to provide structural support.

Designers and Bricklayers should familiarise themselves with Paragraph 9.2.9 and Table 18D and Table 18E of E2/AS1. You can read this here: E2/AS1 (part 4).

Lintel seating – lintels shall have a minimum seating into adjacent veneer of

(i) 100mm for spans up to, and including 2m

(ii) 200mm for spans over 2m

There are two methods of installing a lintel bar with brick veneer:

Acceptable solution for lintel bar – E2/AS1 provides a method where the angle spans the brick from one side to the other. The lintel should be kept either solely in the brick or the timber framing but not both. The angle sizes within Table 18E of E2/AS1 should be applied.

Alternative solution for lintel bar – The second method involves sitting the lintel back 20mm from the face of the veneer, and have correct seating. With this method, the angle is attached directly to the structure and kept 5mm short of the opening at each end to accommodate any movement in the frame. The below table applies to this method.

Master Brick & Blocklayers®

Max.Span(mm)	Size of Angle
3000mm	80X80X6
3500mm	100 x 100 x 6 or 125 x 75 x 6
4500mm	125 x 75 x 8
4800mm	125 x 75 x 10

The durability requirements for lintel bars can be seen in Table 18D of E2/AS1 (part 4).

KDC - Approved Building Consent Document - BC210208 - Pg 84 of 197 - 2/07/2021 - ComplyNZ

KDC - Approved Building Consent Document - BC210208 - Pg 85 of 197 - 2/07/2021 - ComplyNZ

Control joints allow concrete brick veneer to respond to minor movement of the building.

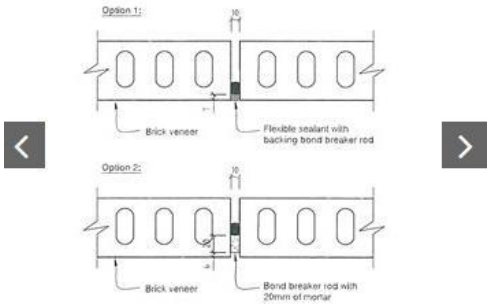

Alternative Control Joint options.

Control Joints

Buildings and building components generally move slightly after construction. Often this relates to normal expansion due to acceptable moisture absorption. Control joints are vertical gaps, usually filled with in elastic materials, which allow brick veneer to respond to these movements usually by opening in response to expansion.

Generally clay brick veneer does not require control joints. Slight expansion can occur soon after manufacture but this does not appear to present any issues in normal construction.

Concrete brick veneer however typically requires control joints. Designers and bricklayers should check manufacturers' specifications and familiarise themselves with Section 9.2.8.2 of E2/AS1 which you can read here: E2/AS1 (part4).

DESIGNING OF CONTROL JOINTS

Control joints should also be designed and constructed as shown in Figure 73A of E2/AS1.

This requires that control joints consist of:

- A backer rod of compressible foam; and
- Sealant that complies with either Type F, Class 20 LM or 25 LM of ISO11600 or Low modulus Type II Class A of Federal Specification TI-S-00230C

PLACEMENT OF CONTROL JOINTS

To allow for the potential shrinkage in the length of concrete brick veneer E2/AS1 requires that vertical control joints are placed at not more than 6m centres.

Vertical control joints are also required to be located:

- Within 600mm of T joints;
- Within 600mm of L shaped corners or by restricting the space to the next control joint to 3.2m maximum
- At changes in wall height that exceed 600mm;
- At changes in wall thickness.

KDC - Approved Building Consent Document - BC210208 - Pg 86 of 197 - 2/07/2021 - ComplyNZ

It is not uncommon to read reports from Geo-Tech Engineering control joints in clay brick veneers due to expansive clay soils but this is not necessary. Where such soil types occur an appropriate foundation should be designed to manage this and there is no evidence that control joints would be necessary.

Control joints should be considered however in clay and concrete brick veneer in the following circumstances:

- If a wall is 10m or longer and has no window or door openings– a control joint should be installed at an intermediate point.
- Where a small panel of brick work adjoins a large panel of brickwork, as movement within the framing may cause a crack, a control joint may be considered. An alternative however would be to strengthen the framing using additional brick ties and using reinforcing in mortar joints in these areas.

Where a control joint is used it is important to ensure that the framing details provide a stud within 200mm of each side of the joint for the fitting of brick ties.

If possible, position a control joint behind down pipes to hide them.

It is important to remember that if a crack develops in an otherwise well-constructed brick veneer it is an aesthetic issue only and should cause no problems as to weather tightness or the overall integrity of the veneer. A control joint is in effect a controlled crack.

KDC - Approved Building Consent Document - BC210208 - Pg 87 of 197 - 2/07/2021 - ComplyNZ

Brick Veneer Heights

E2/AS1 sets the limitations for Brick Veneer heights in Section 9.2.3 and Figure 73B . You can read this document here: E2/AS1 (part 4)

It advises that brick veneers with timber framing shall have:

- A maximum height of veneer above finished ground level of 7m;
- A maximum height of 4m from the foundation;
- A maximum height of 5.5m to the apex of a gabled area.

If the veneer is supported by a masonry structure, NZZS4229:2001 permits a veneer height of 6.0 for the wall and up to 10m in a gable area.

The Clay Brick and Paver Manufacturers Association have developed a combined 2 storey system for clay brick veneer- Design Note TB 1. Designers and Bricklayers should familiarise themselves with this document which you can read here: 2StoreyClayBrickVeneerConstruction- MadeEasy

You may also want to consider the following concrete brick 2 Storeys olutions:

Firth 2StoreyBrickVeneersolutionforDevonstoneand70mmBrickVeneers

Firth 2StoreyBrickVeneersolutionforFirth 10seriesHollowMasonry, Manorstoneand 90mmBrick Veneers

KDC - Approved Building Consent Document - BC210208 - Pg 88 of 197 - 2/07/2021 - ComplyNZ

Staining generally has only an aesthetic effect on brick veneer.

Stain removal

While it is perfectly normal for clay bricks to have a slight variance in colour, this is different than brick stains. All care should be taken during construction to prevent staining occurring, however this is not always possible.

Stain removal depends on the cause of the stain.

Master Brick & Blocklayers recommends that you consult your bricklayer or brick supplier before attempting stain identification and removal.

VANADIUM STAINS

Light-coloured clays often contain vanadium salt that are generally colourless but under certain conditions may appear as yellow, green or reddish-brown discolouration of the brick. Vanadium stains are neither permanent nor harmful and do not indicate a defect in the brick.

Vanadium stains are often generated by the use of too strong a concentration of hydrochloric acid during the initial cleaning process, or from excessive water penetration.

While vanadium stains will wash off overtime, an application of 4% Sodium Hypochlorite (Janola) or a mixture of Sodium Bicarbonate and water (60g per litre of water) will assist in their removal.

Hydrochloric acid may turn vanadium salts black and make it difficult to remove. It is therefore important that vanadium salts are removed before attempting to clear mortar residue from clay brick veneer with hydrochloric acid.

MANGANESE STAINS

This stain occurs characteristically along the edges of grey or brown clay bricks. It appears as a dark-blue brown discolouration.

If you suspect manganese staining, contact your brick company for them to inspect and advise on a resolution.

Master Brick & Blocklayers®

COPPER AND BRONZE STAINS

Sometimes clay brick veneer may be in close proximity to metals such as copper or bronze. Water washing over these metal surfaces can result in a bluish-green stain appearing on the surface of the bricks.

These stains may be removed using a solution of 1 part acetic acid (80% or stronger): 1 part hydrogen peroxide (30%-35%strength):6 parts water.

IRON OXIDE (RUST)

Rust can be the result of using hydrochloric acid on clay bricks. This may be able to be removed by applying a solution of 1 part phosphoric acid to 4 parts of water. Allow up to 24 hours for it to work.

SMOKE STAINS

Common around domestic fireplaces but can also be an issue with fire damaged buildings.

Minor smoke stains can be removed with sugar soap–which is a highly alkaline mixture. Mix approximately 500g in to 2 litres of water and apply liberally by brush. After the smoke stains disappear, scrub with a mixture of detergent and household scouring powder containing Sodium Hypochlorite (Janola).

KDC - Approved Building Consent Document - BC210208 - Pg 89 of 197 - 2/07/2021 - ComplyNZ

KDC - Approved Building Consent Document - BC210208 - Pg 90 of 197 - 2/07/2021 - ComplyNZ

Efflorescence

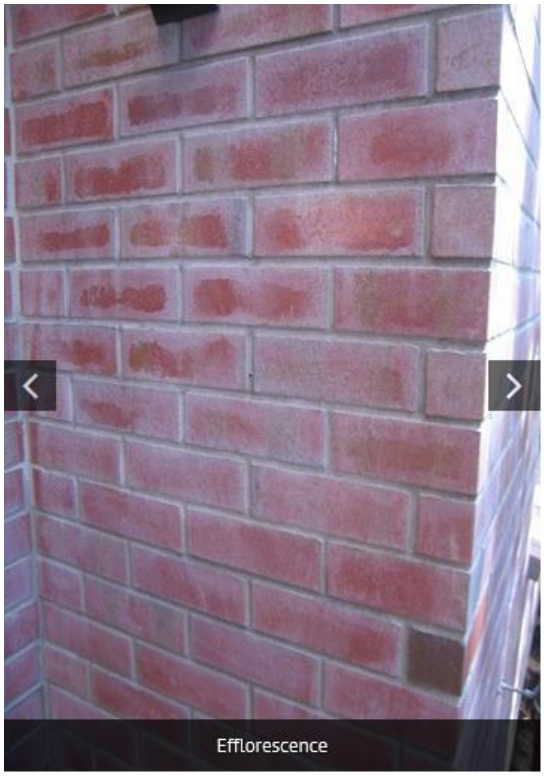

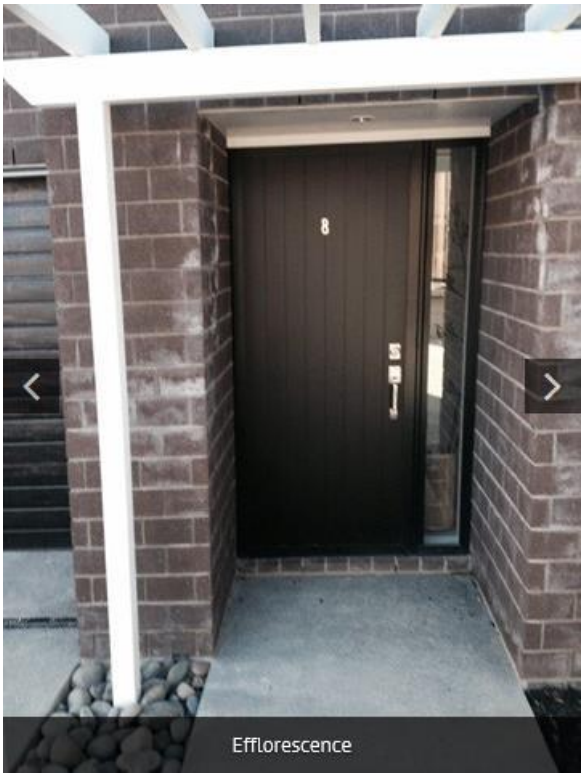

Efflorescence is a calcium deposit that can form on clay or concrete veneer. It appears as a white powdery and sometimes 'fluffy' deposit on the brick.

Efflorescence occurs where excessive amounts of water enters a veneer that has soluble salts present. When the water dries out, the salts are then deposited on the surface of the veneer. Soluble salts can enter the veneer from various sources:

- Mortar components, particularly cement.
- Soil or fill in contact with the wall.
- Sea spray in coastal areas.
- Masonry units (not a common source).

Master Brick & Blocklayers recommends that bricklayers protect new brick work with adequate coverings when rain interrupts construction.

Persistent efflorescence may act as a warning sign that water is entering the wall through faulty copings, flashings or pipes.

CLEANING EFFLORESCENCE

Most efflorescence will naturally disappear over time, however its removal can be accelerated by brushing with a stiff dry brush. The use of a dust pan or vacuum cleaner to collect the salts after

KDC - Approved Building Consent Document - BC210208 - Pg 91 of 197 - 2/07/2021 - ComplyNZ

brushing is recommended as this will prevent salts from re-entering the brickwork or any porous paving materials below.

After brushing and cleaning up, an absorbent cloth (wrung out until damp only) can be used to pick up any residue. Frequent rinsing of the cloth in fresh water is advisable. Rinsing brick work with water will only cause the salt to be re-absorbed in to the bricks and reappear when dry.

BRICK TOLERANCES AND AESTHETIC APPEARANCE

Brick Tolerances and Aesthetic Appearance

It is possible for a brick veneer to be building code compliant but not have the visual look that reflects the skills of an experienced bricklayer. This is referred to as 'workmanship quality'.

It is important to discuss with your bricklayer the aesthetic look you are hoping to achieve with your brick veneer and if possible, include them in your selection process.

Master Brick & Blocklayers recommends that parties to a brick veneer construction enter into a clear, written contract that sets out the expectations of parties including agreed workmanship quality standards, quality checking responsibilities and an agreement on how disputes will be managed– even if it is not a compulsory requirement under legislation.

VIEWING DISTANCE

Due to the nature of bricks no two bricks are the same and no brick is perfect when examined close-up. ASTMC90 has been adopted as the industry standard for viewing brickwork – it states that 'for exposed wall construction chips and imperfections shall not be evident when viewed from a distance of not less than 6.1m in diffused light'.

DRYING CRACKS

During the manufacturing process hairline cracks can appear in a small number of clay bricks. This occurs during the drying process when excess moisture is removed from the clay prior to it entering the kiln. Bricks with these cracks conform to AS/NZS4455 and do not compromise the structural integrity or weather tightness of the brick.

From an aesthetic standpoint, the relevant American Standard Test Method (ASTM) has been adopted. ASTM C216-04 specifies that bricks must contain less than 5% visible cracking when viewed from a distance of 6.1 meters.

CHIPPING

Bricks may be transported several times before arriving onsite and occasionally chipping can occur. Chips are more noticeable on bricks that have a surface colour different from the body of the brick. A workmanship quality standard is achieved if imperfections, including chips, are not visible when viewed from a distance of not less than 6.1m under diffused light as per ASTM C90.

New Zealand does not have a standard to assist a Bricklayer to evaluate the level of chipping acceptable in a brick prior to laying however ASTM C216-15 has been adopted by BBFNZ.

KDC - Approved Building Consent Document - BC210208 - Pg 92 of 197 - 2/07/2021 - ComplyNZ

- ASTM C216-15 for a general purpose face brick (FBS textured) basically has the following requirements:
- Chips from the edge should not be deeper than 8mm
- Corner chips should not be deeper than 13mm.
- When all the length of the chips are added up that the total is not exceed 10% of the perimeter of the brick face (as an example, the accumulative lengths of the chips for a 230mm X 75mm brick shall not exceed 61mm).

It is good practice for Bricklayers to set aside bricks that do not meet this standard and to assess whether to discard it or use it for cuts.

DIMENSIONAL CATEGORY

AS/NZS4455 Masonry units and segmental pavers' calls for bricks to be classified into dimensional categories based on their deviation from their work size, or the size specified in manufacture.

To test if bricks meet the standard, 20 bricks should be placed in a row and the total length should be measured. This can be done with height, width and length. Tolerances for these are:

Category	Height	Length	Width
DW1	±90mm	±50mm	±50mm
DW2	±60mm	±40mm	±40mm

RUBBING

During transportation brick may rub together on the pallet. This can sometimes cause light rubbing on the face of the bricks. Excessively rubbed bricks should be discarded or used for cuts.

COLOUR VARIATION

Clay and concrete bricks are both subject to some variation in colour between batches. This is part of the inherent beauty of brick.

Unusual discolouration patterns can be limited by blending the bricks. Should there be any concern regarding significant colour variation laying should cease and the manufacturer contacted.

KDC - Approved Building Consent Document - BC210208 - Pg 93 of 197 - 2/07/2021 - ComplyNZ

PRODUCT CERTIFICATE

40 Below & Hydro Flashing Tapes

CERTIFICATE NO: CM70075
Date of issue: 8 April 2021

1 CERTIFICATE HOLDER DETAILS

MASONS Plastabrick Ltd
18A David McCathie Place
Silverdale, Auckland 0932, New Zealand

trent@mpb.co.nz
Ph: +64 9 414 7551
www.mpb.co.nz

2 PRODUCT CERTIFICATION BODY

Bureau Veritas Australia Pty Ltd
3/435 Williamstown Road
Port Melbourne VIC 3207
Australia

Ph: 1800 855 190
www.bureauveritas.com.au

Bureau Veritas Australia Pty Ltd

The complaints process for this certificate can be found here:
www.bureauveritas.com.au/your-feedback

KEY INFORMATION

3 SUMMARY OF DESCRIPTION OF BUILDING METHOD OR PRODUCT

40 Below & Hydro Flashing Tapes are made of three components (film or fabric carrier, adhesive, and a release liner). This certificate covers the following products:

- 40 Below Window Flashing Tape
- 40 Below Platinum Flashing Tape
- 40 Below Flex Flashing Tape
- Hydro Flashing Tape

and CornerGuard as an optional accessory for sill flashing.

Continuation of description can be found in item 9. Supporting Information about Description of Building Product or Method.
Matters that should be taken into account in the use or application of the building method or product can be found in item 6. Conditions and Limitations of Use.

4 SUMMARY OF INTENDED USE OF BUILDING METHOD OR PRODUCT

40 Below & Hydro Flashing Tapes are used to flash around windows and doors as a secondary water-resistant barrier.
40 Below, 40 Below Platinum and 40 Below Flex tapes may also be used to seal joints in rigid air barriers.
40 Below Platinum, 40 Below Flex and Hydro may also be used at joinery heads to seal flashing upstands to the wall underlay.

Continuation of intended use can be found in item 8. Supporting Information about Intended use of Building Product or Method.

5 BUILDING CODE PROVISIONS

The performance clauses of the New Zealand Building Code that are relevant to the intended use and with which the building method or product complies or contributes to (where used as part of a system).

B2 Durability – B2.3.1(a), B2.3.2
E2 External Moisture – E2.3.2 (contributes to), E2.3.7 (contributes to)
F2 Hazardous Building Material – F2.3.1

How the building method or product complies or contributes can be found in item 12. Basis for Certification. Any qualifications on the extent of that compliance can be found in item 6. Conditions and limitations of use.

This certificate is issued by an independent certification body accredited by JAS-ANZ, the product certification accreditation body appointed by the Chief Executive of the Ministry of Business, Innovation and Employment under the Building Act 2004.
The Ministry does not in any way warrant, guarantee, or represent that the building method or product that is the subject of this certificate conforms with the New Zealand Building Code, nor accept any liability arising out of the use of the building method or product.
The Ministry disclaims to the extent permitted by law, all liability (including negligence) for claims of losses, expenses, damages, and costs arising as a result of the use of the building method(s) or product(s) referred to in this certificate.

This certificate may only be reproduced in its entirety. It is advised to check that this certificate is currently valid and not withdrawn or suspended by referring to the Register of Product Certificates on the Building Performance website http://www.building.govt.nz.

KDC - Approved Building Consent Document - BC210208 - Pg 94 of 197 - 2/07/2021 - ComplyNZ

PRODUCT CERTIFICATE

40 Below & Hydro Flashing Tapes

6 CONDITIONS AND LIMITATIONS OF USE

1. 40 Below & Hydro Flashing Tapes are certified for use in buildings:
   a) within the scope of E2/AS1, and
   b) located in any wind zone up to and including EXTRA HIGH as defined in E2/AS1, and
   c) located in any exposure zone.
2. 40 Below & Hydro Flashing Tapes shall be used in accordance with the 40 Below & Hydro Flashing Tape Installation Instructions, March 2021, and the requirements of Acceptable Solution E2/AS1.
3. 40 Below & Hydro Flashing Tapes shall not be installed in areas where it has the potential to be exposed to heat, such as chimney flues.

NOTE: Together, items 3, 4, 5 and 6 define scope of use.

7 HEALTH AND SAFETY INFORMATION

The compliance with any manufacturer's installation instructions, maintenance, OH & S statements, MSDS's and other Health and Safety declarations will provide the necessary Health and Safety Information pertaining to the product. Refer to section 12 for specific detail of compliance with the performance requirements of clauses F1 to F9 of the Building code.

8 SIGNATURES

Sam Guindi
Product Certification Manager

For and on behalf of
Bureau Veritas Australia Pty Ltd

Trent Mason
Director

For and on behalf of
MASONS Plastabrick Ltd

This certificate is issued by an independent certification body accredited by JAS-ANZ, the product certification accreditation body appointed by the Chief Executive of the Ministry of Business, Innovation and Employment under the Building Act 2004.
The Ministry does not in any way warrant, guarantee, or represent that the building method or product that is the subject of this certificate conforms with the New Zealand Building Code, nor accept any liability arising out of the use of the building method or product.
The Ministry disclaims to the extent permitted by law, all liability (including negligence) for claims of losses, expenses, damages, and costs arising as a result of the use of the building method(s) or product(s) referred to in this certificate.

This certificate may only be reproduced in its entirety. It is advised to check that this certificate is currently valid and not withdrawn or suspended by referring to the Register of Product Certificates on the Building Performance website http://www.building.govt.nz.

KDC - Approved Building Consent Document - BC210208 - Pg 95 of 197 - 2/07/2021 - ComplyNZ

PRODUCT CERTIFICATE

40 Below & Hydro Flashing Tapes

SCHEDULE: INFORMATION THAT SUPPORTS KEY INFORMATION

9 SUPPORTING INFORMATION ABOUT DESCRIPTION

40 Below Window Flashing Tape has a white woven facing and is supplied in 20 m rolls 75mm, 100 mm, 150mm or 230mm wide.
40 Below Platinum Flashing Tape has a silver foil facing and is supplied in 20 m rolls 75mm, 100mm, 150mm or 230mm wide.
40 Below Flex Flashing Tape has white flexible facing and is supplied in 20 m rolls 75mm, 100 mm, 150mm or 230mm wide.
Hydro Flashing Tape has an aluminium facing and is supplied in rolls 75mm x 25m, 100mm x 25m, 150mm x 10m, 150mm x 25m, or 200mm x 25m.

10 SUPPORTING INFORMATION ABOUT INTENDED USE

Further details regarding the use of the product can be found in 40 Below & Hydro Flashing Tape Installation Instructions, March 2021.

11 SUPPORTING INFORMATION ABOUT CONDITIONS AND LIMITATIONS OF USE

N/A

This certificate is issued by an independent certification body accredited by JAS-ANZ, the product certification accreditation body appointed by the Chief Executive of the Ministry of Business, Innovation and Employment under the Building Act 2004.
The Ministry does not in any way warrant, guarantee, or represent that the building method or product that is the subject of this certificate conforms with the New Zealand Building Code, nor accept any liability arising out of the use of the building method or product.
The Ministry disclaims to the extent permitted by law, all liability (including negligence) for claims of losses, expenses, damages, and costs arising as a result of the use of the building method(s) or product(s) referred to in this certificate.

This certificate may only be reproduced in its entirety. It is advised to check that this certificate is currently valid and not withdrawn or suspended by referring to the Register of Product Certificates on the Building Performance website http://www.building.govt.nz.

KDC - Approved Building Consent Document - BC210208 - Pg 96 of 197 - 2/07/2021 - ComplyNZ

PRODUCT CERTIFICATE

40 Below & Hydro Flashing Tapes

12 BASIS FOR CERTIFICATION

B2 Durability - By testing and comparison with Acceptable Solution E2/AS1
E2 External moisture - By testing and comparison with Acceptable Solution E2/AS1
F2 Hazardous building materials - By comparison with the performance requirements of Building Code Clause F2.3.1

13 SUPPORTING DOCUMENTATION FOR CERTIFICATION

1. Acceptable Solutions and Verification Methods For New Zealand Building Code Clause B2 Durability (Amendment 12), 28 November 2019
2. Acceptable Solutions and Verification Methods For New Zealand Building Code Clause F2 Hazardous Building Materials (Amendment 3), 1 January 2017
3. Acceptable Solutions and Verification Methods For New Zealand Building Code Clause E2 External moisture 3rd edition (Amendment 10), 5 November 2020
4. PRI Test Report 2309T0001-01 Tests on 40 Below Flashing Tape to AAMA 711, 19 January 2021
5. PRI Test Report 2309T0001-02 Tests on 40 Below Platinum Flashing Tape to AAMA 711, 19 January 2021
6. PRI Test Report 2309T0001-03 Tests on Gerband 587 Flashing Tape to AAMA 711, 19 January 2021
7. LABORATORIO SUDAMERICANO DE ENSAYOS E INVESTIGACIONES TERMODINAMICAS Test Report No 17-13632 Tests on Hydra Flashing Tape to AAMA 711, 3 August 2018
8. Les Boulton & Associates Report 191235-02 Assessment of Masons Self-adhesive Window Flashing Tapes, 20 March 2019
9. 40 Below & Hydro Flashing Tape Installation Instructions, March 2021

This certificate is issued by an independent certification body accredited by JAS-ANZ, the product certification accreditation body appointed by the Chief Executive of the Ministry of Business, Innovation and Employment under the Building Act 2004.
The Ministry does not in any way warrant, guarantee, or represent that the building method or product that is the subject of this certificate conforms with the New Zealand Building Code, nor accept any liability arising out of the use of the building method or product.
The Ministry disclaims to the extent permitted by law, all liability (including negligence) for claims of losses, expenses, damages, and costs arising as a result of the use of the building method(s) or product(s) referred to in this certificate.

This certificate may only be reproduced in its entirety. It is advised to check that this certificate is currently valid and not withdrawn or suspended by referring to the Register of Product Certificates on the Building Performance website http://www.building.govt.nz.

KDC - Approved Building Consent Document - BC210208 - Pg 97 of 197 - 2/07/2021 - ComplyNZ

PRODUCT CERTIFICATE

40 Below & Hydro Flashing Tapes

14 CONDITIONS RELATING TO NOTIFICATION

(a) the certificate holder notifies the product certification body in writing of any intended change to any of the following particulars:
(i) the name, address, or contact details of the certificate holder:
(ii) any address of a location where a certified product is produced or manufactured:

(b) the certificate holder notifies the product certification body in writing of any intended change, modification, or alteration to any of the following:
(i) the certified building method or product:
(ii) the method of its production or manufacture:
(iii) the product quality plan prepared in respect of the certified building method or product:
(iv) the application or installation instructions for the certified building method or product:
(v) any documentation relating to the use and maintenance of the certified building method or product:

(c) if the certificate holder has any reason to suspect that the certified building method or product does not comply with the Building Code, the certificate holder notifies the product certification body in writing of the reason for that suspicion:

(d) if the certificate holder or the product certification body finds that a certified building method or product that has been released on the market does not comply with the Building Code, the certificate holder discloses that fact in disclosure statements published in a form that is acceptable to the product certification body and to the chief executive:

(e) if the certificate is suspended or revoked, the certificate holder—
(i) notifies all customers to whom the building method or product is regularly supplied; and
(ii) immediately ceases using the certificate, the mark of conformity, and any reference to the number of the certificate.

This certificate is issued by an independent certification body accredited by JAS-ANZ, the product certification accreditation body appointed by the Chief Executive of the Ministry of Business, Innovation and Employment under the Building Act 2004.
The Ministry does not in any way warrant, guarantee, or represent that the building method or product that is the subject of this certificate conforms with the New Zealand Building Code, nor accept any liability arising out of the use of the building method or product.
The Ministry disclaims to the extent permitted by law, all liability (including negligence) for claims of losses, expenses, damages, and costs arising as a result of the use of the building method(s) or product(s) referred to in this certificate.

This certificate may only be reproduced in its entirety. It is advised to check that this certificate is currently valid and not withdrawn or suspended by referring to the Register of Product Certificates on the Building Performance website http://www.building.govt.nz.

JANUARY 2020

KDC - Approved Building Consent Document - BC210208 - Pg 98 of 197 - 2/07/2021 - CodeMarkNZ

RibRaft®

TECHNICAL MANUAL

CODEMARK
CM20056

KDC - Approved Building Consent Document - BC210208 - Pg 99 of 197 - 2/07/2021 - ComplyNZ

This document contains design and installation information. A variation to any of the information given requires specific engineering design and is hence beyond the scope of this document.

The Firth RibRaft® Floor System can be constructed for all slab-on-ground concrete floors for domestic or residential buildings that fall within the scope of NZS 3604:2011 “Timber Framed Buildings” and Clause 3 “Scope” of Section 1 of this Manual. The design and installation details in this Manual shall be used to design and construct such a floor.

The Firth RibRaft® Floor System is covered by the MBIE Codemark®. This is conditional on the system being used as described in CertMark Australasia certification decision, which in turn requires design in accordance with Section 1 and installation in accordance with Section 2 of this Manual and on site verification in accordance with Section 3.

Note that a MBIE Codemark® means that if this Manual is rigidly followed the relevant Building Control Authority will automatically provide a building permit without the need for producer statements. To comply with the Manual does mean that Firth Certified Concrete® must be used.

THIS MANUAL CONSISTS OF 3 SECTIONS:

KDC - Approved Building Consent Document - BC210208 - Pg 100 of 197 - 2/07/2021 - ComplyNZ

SECTION 1 DESIGN INFORMATION

Contains information principally useful for the specifier or building designer

1.0	**INTRO**	**4**
2.0	**TECHNICAL INFORMATION**	**4**
2.1	Overview	4
2.2	Pods	4
2.3	Steel	4
2.4	Concrete	4
3.0	**SCOPE**	**5**
3.1	Structure Limitations	5
3.2	Live Loading	5
3.3	Snow Loading	5
3.4	Dead Loading for Use with This Manual	5
3.5	Foundation Requirement for Different Building Types	6
3.6	Foundation Soils	6
3.7	Flow Diagrams	6
4.0	**CONSTRUCTION DETAILS**	**9**
4.1	Pod Layout	9
4.2	Edge Beam Width and Reinforcement	9
4.3	Internal Ribs (non load bearing) Width and Reinforcement	9
4.4	Internal Ribs (load bearing) Width and Reinforcement	9
4.5	Point loads	9
4.6	Mesh Reinforcement	11
4.7	Re-entrant Corners	11
5.0	**LATERAL RESISTANCE**	**12**
5.1	Earthquake Resistance	12
5.2	Wind Resistance	13
5.3	Shear Keys	13
5.4	Design Example for Lateral Resistance Calculation	14
6.0	**OTHER DESIGN DETAILS**	**14**
6.1	R-Values	14
6.2	Shrinkage Control	17
6.2.1	Saw Cut Joints	17
6.2.2	Free Joints	17
6.3	Services Detailing	18
6.3.1	Within Slab Running of Services	18
6.3.2	Under Slab Running of Services	18
6.3.3	Recesses for Showers	20
6.3.4	Step Down of up to 600mm in the RibRaft® Floor	21

SECTION 2 INSTALLATION INFORMATION

Primarily aimed at the person on site installing the Firth RibRaft® Floor system

1.0	**INTRO**	**22**
2.0	**SITE REQUIREMENTS**	**22**
2.1	General	22
2.2	Temporary Excavations	22
2.3	Surface Water	22
3.0	**INSTALLATION PROCEDURE**	**24**
3.1	Site Preparation	24
3.2	Earthworks	24
3.3	Shear Keys	24
3.4	Plumbing and Services	24
3.5	Sand Blinding	24
3.6	Damp Proof Membrane	25
3.7	Edge Formwork	25
3.8	Laying the Pods and Spacers	26
3.9	Reinforcing Steel	26
3.9.1	Edge Beam Steel	26
3.9.2	Rib Steel	27
3.9.3	Mesh Reinforcing	27
3.9.4	Re-entrant Corner Steel	27
3.10	Concrete Installation	27
3.10.1	Placing	28
3.10.2	Finishing	28
3.10.3	Curing	29
3.11	Shrinkage Control Joints	29
3.11.1	Saw Cut Joints	29
3.11.2	Free joints	29
3.12	Removal of Formwork	30
3.13	Masonry Veneer	30
3.14	Landscaping/Paving	30
3.15		
4.0	**SHEAR KEYS**	**31**

SECTION 3 VERIFICATION

Describes the required verification checks

1.0	**DESIGN**	**32**
2.0	**CONSTRUCTION**	**32**

SECTION: DESIGN INFORMATION

1

1.0 THIS SECTION OF THIS MANUAL CONTAINS DESIGN INFORMATION NOT REQUIRING SPECIFIC ENGINEERING INPUT FOR THE FIRTH RIBRAFT® FLOOR SYSTEM (THE SYSTEM). FULL INFORMATION ON THE INSTALLATION PROCEDURES IS DESCRIBED IN SECTION 2 OF THIS MANUAL (INSTALLATION INFORMATION). WHERE STANDARDS ARE REFERENCED IN THIS MANUAL, THESE SHALL INCLUDE THE LATEST AMENDMENTS.

KDC - Approved Building Consent Document - BC210208 - Pg 101 of 197 - 2/07/2021 - ComplyNZ

2.0 TECHNICAL INFORMATION

2.1 Overview

The Firth RibRaft® Floor System is a reinforced concrete waffle raft floor slab-on-ground. Typically it consists of an 85mm thick slab supported by a grid of ribs normally 100mm wide at 1200mm x 1200mm centres. The overall depth is 305mm. Edge beams and ribs under load bearing walls are 300mm wide to provide for the extra load carried by these members. Where heating coils of less than 25mm diameter are embedded in the topping, the slab concrete thickness shall be 110mm meaning the overall thickness is 330mm. Where the top floor surface is honed to provide a decorative finish, a slab thickness of 100mm (before honing) should be specified.

2.2 Pods

Firth RibRaft® polystyrene pods 1100mm square and 220mm thick are placed directly on levelled ground and are arranged in such a way as to form a reinforced concrete floor slab with a grid of reinforced concrete ribs and edge beams when concrete is placed onto them. Pods may be cut to suit specific architecture layout and also to accommodate services. 300mm thick pods are available if needed for deeper edge beams and internal ribs.

2.3 Steel

Reinforcing steel in the slab shall consist of Welded Reinforcing Mesh complying with AS/NZS 4671:2001 with a minimum weight of 2.27kg/m^2, a lower characteristic stress of 500MPa, square configuration of orthogonal bars between 150 to 200mm centres, and ductility class L or E, hereafter referred to “mesh”. The presence of Class E reinforcing bars in the ribs and beams provides adequate ductility of the system which allows the use of class L mesh. Typically the topping mesh reinforcement will be 665 mesh (class L) or SE62 ductile mesh, each being equally applicable. The reinforcing bars in the ribs and edge beams shall conform to AS/NZS 4671:2001 “Steel Reinforcing Materials”. Specifically designed spacers are used to position the polystyrene pods and the rib and edge beam reinforcing steel bars in a secure manner until the concrete is placed. The reinforcing mesh is held in place by mesh chairs. Conventional timber or steel formwork is used to form the edge of the slab.

2.4 Concrete

One of the following Firth concrete products shall be used in the system:

1) Raftmix: a 20MPa 100mm slump mix available as a pump mix suitable for 100mm pump lines available in either a 13mm or more usually a 19mm nominal aggregate size, or as a structural (non-pump) mix.

2) Raftmix25: a 25MPa 100mm slump mix available as a pump mix suitable for 100mm pump lines available in either a 13mm or more usually a 19mm nominal aggregate size, or as a structural (non-pump) mix. This mix shall be specified for buildings constructed in the ‘sea spray zone’ (i.e. within 500m of the sea including harbours, within 100m of tidal estuaries or inlets, on offshore islands and elsewhere defined as exposure zone D in 4.2.3.3 of NZS3604).

Note: Additional admixtures to standard RibRaft® mixes to be approved by the Firth Plant Engineer.

CODEMARK™
CM70056

KDC - Approved Building Consent Document - BC210208 - Pg 102 of 197 - 2/07/2021 - ComplyNZ

3.0 SCOPE

This Clause sets out the limitations that apply to the use of the system to ensure that specific engineering input is not required. The concrete floor slab for buildings or ground conditions that do not meet this scope must be subjected to specific engineering design to comply with the requirements of the New Zealand Building Code.

3.1 Structure Limitations

Specific engineering input shall not be required only where the structure supported by the system complies with the following criteria:

- The structure supported by the system is constructed in a location where the Seismic Hazard Factor Z (defined in NZ1170.5) is less than or equal to 0.45 (refer to Figure 6).
- The system is laid level, or has a maximum step of 600mm detailed in accordance with this Manual.
- The structure supported by the system has no basement, part basement or foundation walls.
- The total height from the lowest ground level to the highest point of the roof shall not exceed 10m.
- The structure supported by the system has a roof pitch limited to 60 degrees maximum from the horizontal.
- The maximum height of a single or top storey is 4.8m and any other storey is 3m.
- Only ground floor walls of the structure supported by the system are permitted to be “heavy external walls” (as defined in Clause 3.3).
- The roof truss span shall be less than or equal to 12m when the roof and ceiling loads are supported entirely by the external walls. Where internal support of roof trusses is used the footings below point loads identified by the truss designer shall comply with this Manual.
- Where internal load bearing walls are used to support the roof and floor, the loaded dimensions stated in tables 8.2 and 14.10 of NZ3604:2011 shall apply, and these load bearing walls shall be supported on a 300mm wide load bearing rib as detailed in this manual.
- Floors may be of unlimited size provided that the maximum dimension between free joints shall not exceed 30m. Where free joints are required they should be detailed in accordance with this Manual.

3.2 Live Loading

The live loading cases of structures covered by these designs are:

- 1.5kPa and 3.0kPa as per NZS3604 “Timber Framed Buildings”.
- 13kN concentrated load in garage over area of 0.3 x 0.3m (vehicle limited to 2500kg gross).

3.3 Snow Loading

Open ground snow loading as defined in NZS3604 of up to 2kPa.

3.4 Dead Loading for Use with This Manual

The dead load cases of structures covered by these designs are:

- Light external walls with total mass not exceeding 60kg/m^2 – e.g. timber framing with weather boards and interior wall linings.
- Heavy external walls with total mass greater than 60kg/m^2 but not exceeding 290kg/m^2 – e.g. timber framing with masonry veneer or partially filled 20 series masonry blocks.
- Internal walls with total mass not exceeding 45kg/m^2 – e.g. timber framing and linings.
- Light roofs with total mass not exceeding 45kg/m^2 – e.g. ceiling linings and metal roof, including framing.
- Heavy roofs with total mass greater than 45kg/m^2 but not exceeding 85kg/m^2 – e.g. ceiling lining and concrete tiles or slates, including framing.
- Mid-floors with total mass not exceeding 60kg/m^2 – e.g. timber framing and flooring, including ceiling linings.
- Heavy internal walls and/or load bearing internal walls supported on a load bearing rib.

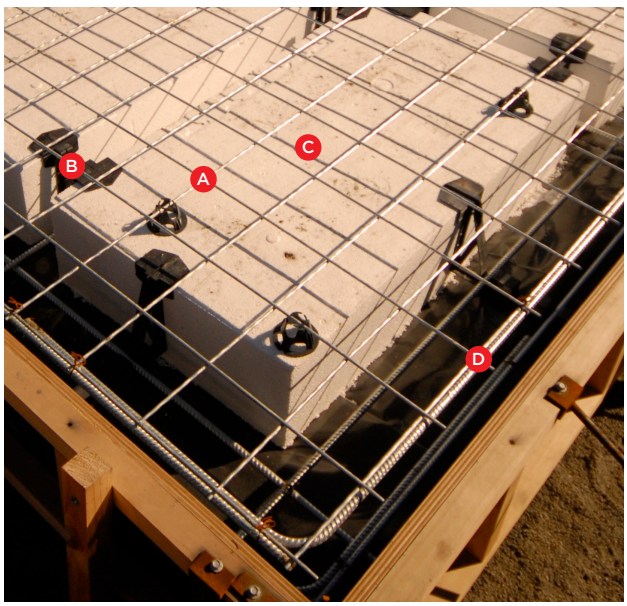

The RibRaft® System

A Steel mesh reinforcing **B Firth 100mm spacer**
C Firth RibRaft® polystyrene pods **D Steel reinforcing**

3.5 Foundation Requirement for Different Building Types

The designs given in this Manual are limited to where the system supports Building Types as described in Table 1. The classification of wall and roof weights are as detailed in Clause 3.4 of this Section. Single and two storey shall be as defined in NZS 3604:2011.

Table 1 Foundation Type Identifier

NUMBER OF STORIES	ROOF	GROUND FLOOR EXTERNAL WALLS	SECOND STOREY EXTERNAL WALLS	1.5KPA LIVE LOAD & UP TO 1KPA SNOW LOAD	3KPA LIVE LOAD & /OR 2KPA SNOW LOAD
SINGLE STOREY	Light	Light		A	A
	Heavy	Light		A	B
	Light	Heavy		B	B
	Heavy	Heavy		C	C
DOUBLE STOREY	Light	Light	Light	C	D
	Heavy	Light	Light	D	E
	Light	Heavy	Light	D	E
	Heavy	Heavy	Light	E	G

3.6 Foundation Soils

The system may be used when the supporting ground meets the definitions of "good ground" given in Section 3 of NZS 3604:2011 (as modified by B1 of the Building Compliance Documents). In addition, the system shall not be used for damp sites i.e. where it can be reasonably expected that the ground water level could come within 600mm of the underside of the system. The acceptability of the ground shall be verified in accordance with Clause 3.1.3 of NZS 3604:2011.

Solutions for soils prone to liquefaction or expansive soils are available using the Firth RibRaft® technology, however these are outside the scope of this Manual and require specific engineering design.

Where the ultimate bearing capacity required of the supporting ground is verified by Scala Penetrometer testing in accordance with Clause 3.3 of NZS3604:2011 or for cohesive soils using a calibrated shear vane in accordance with the NZGS Guideline for Hand Held Shear Vane Test, the bearing capacity shall exceed the values in Table 2 for the proposed building type. For scala penetrometer testing, the bearing capacity shall be considered adequate when the number of blows per 300mm depth of penetration below the underside of the system at each test site exceeds the values given in Table 2 below.

For RibRaft® foundations compliance with Table 2 allows ultimate bearing capacities of less than 300kPa. However, with the exception of bearing capacity all other requirements in NZS3604:2011 for "good ground" shall be complied with.

Table 2 Scala Penetrometer Blows Required and Ultimate Bearing Capacity

FOUNDATION TYPE	ULTIMATE BEARING CAPACITY (KPA)	MIN. BLOWS PER 300MM DEPTH FOR SCALA TESTING
A	140	4
B	175	5
C	210	6
D	240	7
E	275	8
G	Good ground	9

3.7 Flow Diagrams

The flow diagrams on the following pages (adapted from NZS3604:2011) will help in determining whether the non-specific details for the system can be used for the purposes of the concrete floor slab construction. There are two checks in the process. The first is to determine whether the proposed building complies with the requirements set out in this Manual (Building Check), and the second is to determine whether the site complies with the requirements set out in this Manual (Site Check).

(Note: NZS3604:2011 provides for parts of buildings to be considered as individual buildings. These flow diagrams apply to those parts of the building where slab-on-ground is being considered and where the part of the building can be considered as an individual building under NZS3604:2011).

KDC - Approved Building Consent Document - BC210208 - Pg 103 of 197 - 2/07/2021 - ComplyNZ

Figure 1 Building Check Flow Diagram

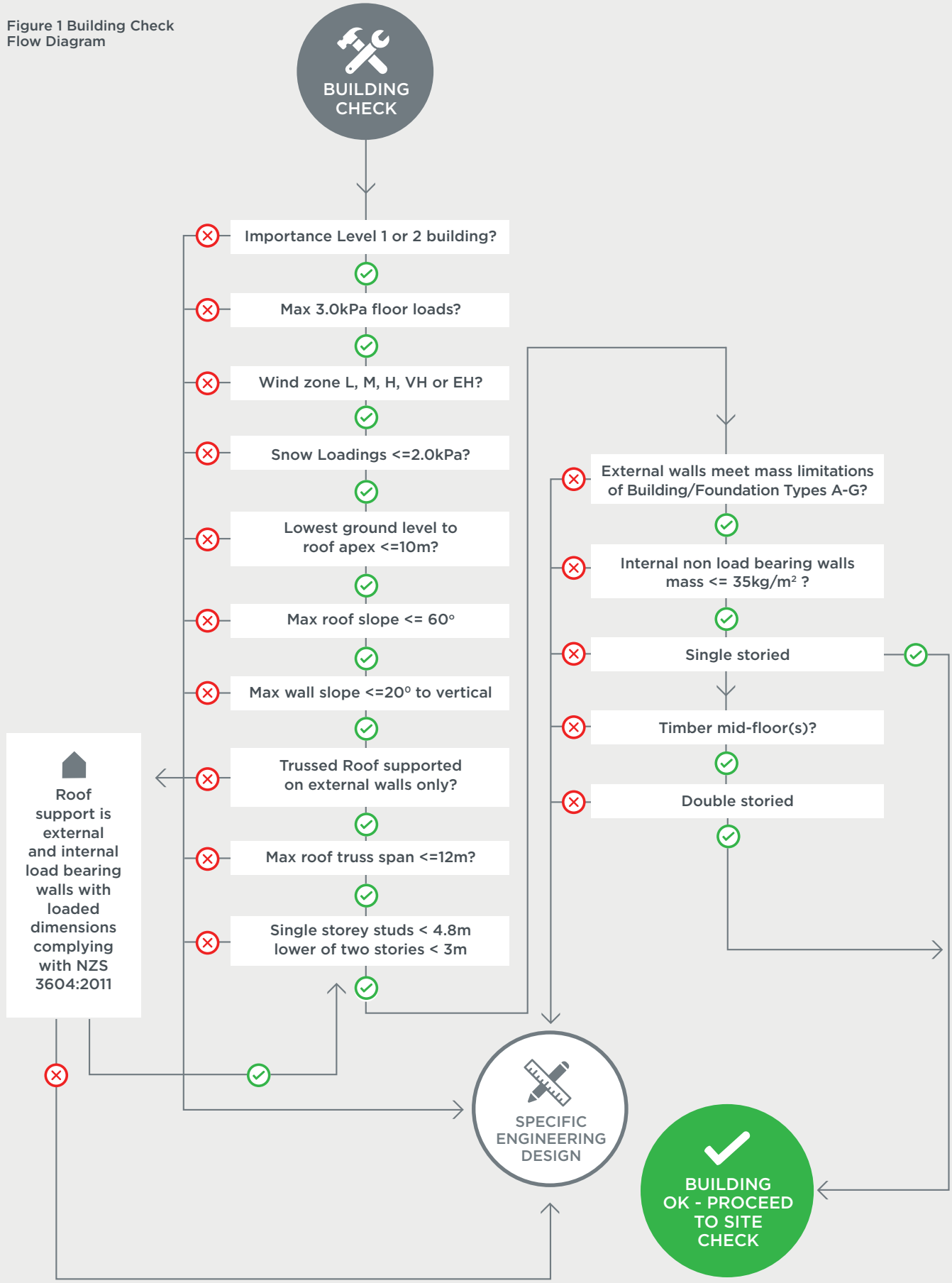

KDC - Approved Building Consent Document - BC210208 - Pg 104 of 197 - 2/07/2021 - ComplyNZ

Figure 2 Building Check
Flow Diagram

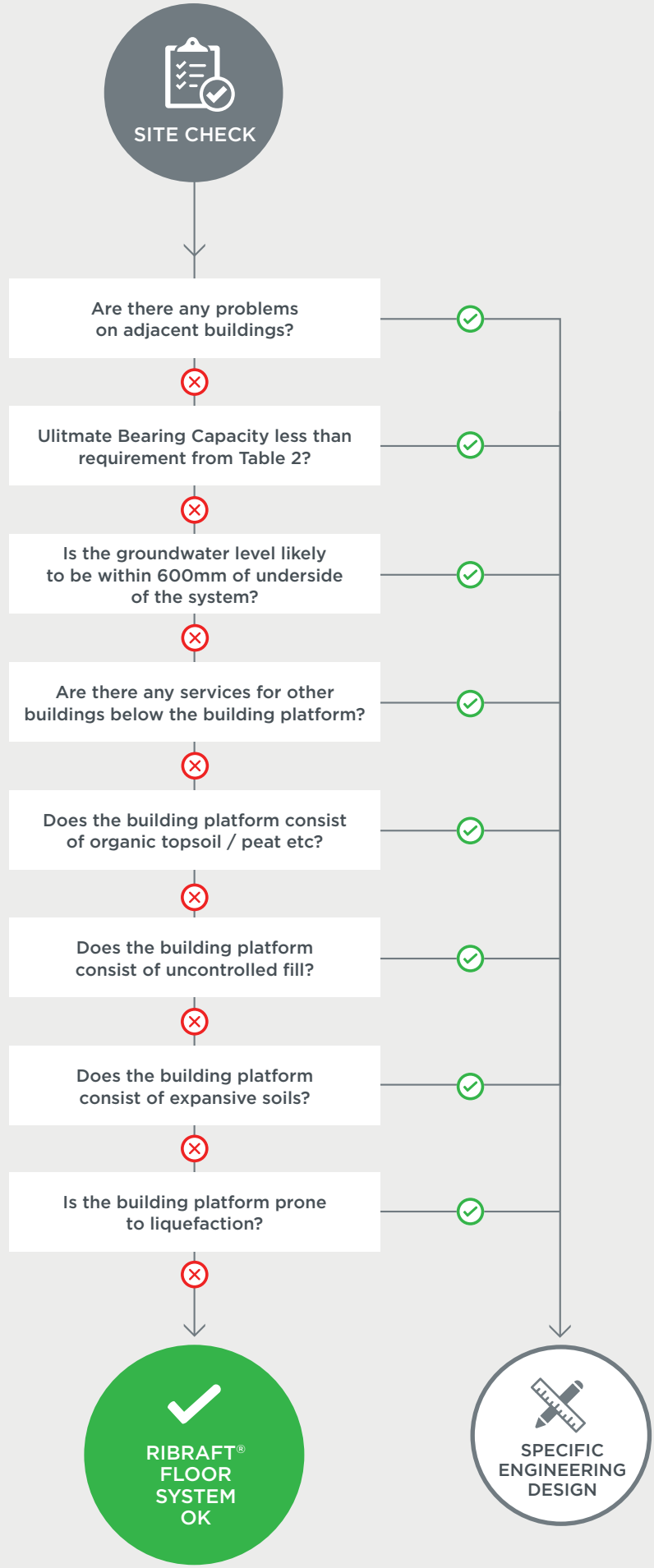

KDC - Approved Building Consent Document - BC210208 - Pg 105 of 197 - 2/07/2021 - ComplyNZ

4.0 CONSTRUCTION DETAILS

Standard construction details for the system are provided here for buildings that fall within the below scope.

4.1 Pod Layout

RibRaft® polystyrene pods supplied by Firth (1100 x 1100 x 220mm thick) shall be placed on levelled ground and arranged in a waffle pattern. The pods are used as void formers while the concrete is curing. These pods are an integral component of the system and shall not be substituted.

Pods shall be placed so as to provide the necessary spacing between the edge beams and ribs as described below. The first rib out from the edge beam shall have a maximum clear separation of 1100mm however in all other cases the centre to centre distance between the ribs, whether they are 100mm or 300mm wide, shall be 1200mm. In the case of 100mm ribs this centre to centre spacing is achieved by the 1100mm square pods however between 100mm and 300mm ribs, or between two 300mm ribs, the pods shall be cut down to suit. Pods may be cut down to size but shall not be added to, where this is necessary to suit the building layout, penetrations or orientation of beams and ribs.

Figure 3 shows a typical layout of the pods and ribs. Note the part pods around the edge, where the building shape dictates, and adjacent to the 300mm rib.

Firth suggests that when drawing the building plan, a generic RibRaft® grid (100mm wide ribs at 1200mm centres) is set out using the corner of the building as a starting point. The location of any load bearing ribs, or point loads greater than 10kN, are identified and pods cut to establish 300mm wide ribs or foundation pads as described in this Manual. The most cost effective solution being a simple grid layout which requires minimum cutting of the pods. Ribs can be used at less than 1200mm centres, however it is more cost effective to use the 1200mm centres wherever practicable.

Figure 3 Typical RibRaft® Plan

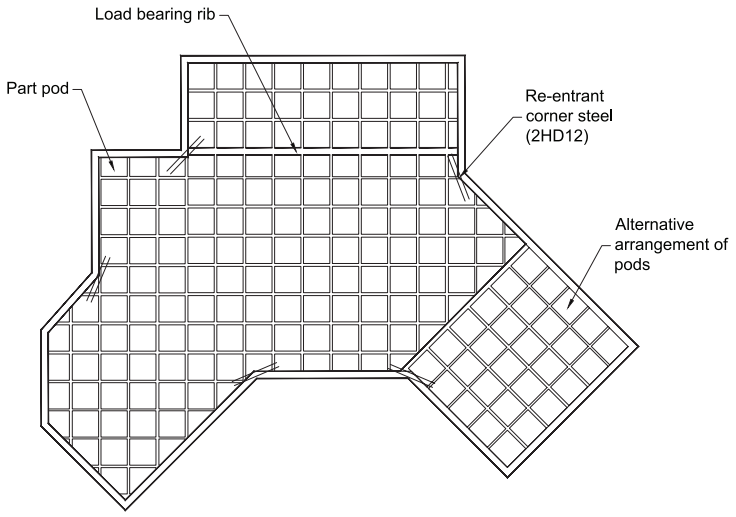

4.2 Edge Beam Width and Reinforcement

Edge beams around the perimeter of the floor slab shall be 300mm to provide bearing capacity for external load bearing walls, and contain 2-HD12 bars (Grade 500E) as bottom steel and 1-HD12 bar (Grade 500E) in the top. This top bar shall be tied to the underside of the reinforcement mesh. Refer Figure 5, below for construction details. The edge beam shall be rebated for brick veneers where necessary as shown in Figure 5(C).

4.3 Internal Ribs (non load bearing) Width and Reinforcement

Each standard internal rib shall be 100mm wide and shall contain 1-HD12 steel bar (Grade 500E) held in place at the bottom of the rib by a Firth spacer. Refer Figure 5E for construction details.

4.4 Internal Ribs (load bearing) Width and Reinforcement

For load bearing walls that support the roof and floors and heavy internal walls, the pods shall be cut to create a 300mm wide rib directly under the load bearing wall, Refer Figure 5(D) for construction details under load bearing walls. Where the load bearing ribs meet and terminate at an edge beam or internal rib the bottom reinforcement from the load bearing rib shall be bent into the adjacent rib and tied together. The reinforcement shall lap for at least 720mm.

KDC - Approved Building Consent Document - BC210208 - Pg 106 of 197 - 2/07/2021 - ComplyNZ

4.5 Point Loads

Truss manufacturers often support the roof trusses internally on posts or studs within a wall, which are described on the truss manufacturer's drawings as falling into various ultimate limit state categories. Table 3 summaries when individual footings are required below the reactions, and the form these should take.

Table 3 Foundation Requirements for Individual Point Loads

	FOUNDATION OPTIONS BELOW POINT LOAD:	
ULTIMATE LIMIT POINT LOAD REACTION	PAD OPTION, GOOD GROUND	BEAM OPTION, BEARING CAPACITY GREATER THAN 140KPA [3]
Up to 10kN	No thickening required	No thickening required
Up to 20 kN	375x375 pad[1]	300mm wide load under point load as detailed in Figure 5
Up to 30kN	450x450 pad[2]	300mm wide load under point load as detailed in Figure 5

Notes
(1) Pad thickness to match depth of pods plus topping (bears on ground not polystyrene) and reinforced with 2 x D12 Bars both ways
(2) Pad thickness to match depth of pods plus topping (bears on ground not polystyrene) and reinforced with 3 x D12 Bars both ways
(3) Refer section 3.6 for confirmation of bearing capacity. With exception of bearing capacity all other requirements in NZS3604 for good ground shall be complied with.

Figure 4 Details for Beam Option Thickening Under Point Loads

ULTIMATE LIMIT LOAD P FROM TRUSS DESIGNER	MINIMUM EDGE DISTANCE X IN MM
20kN	200 *
30 kN	400 *

* If minimum edge distances cannot be achieved extend thickening to next 100mm ribs

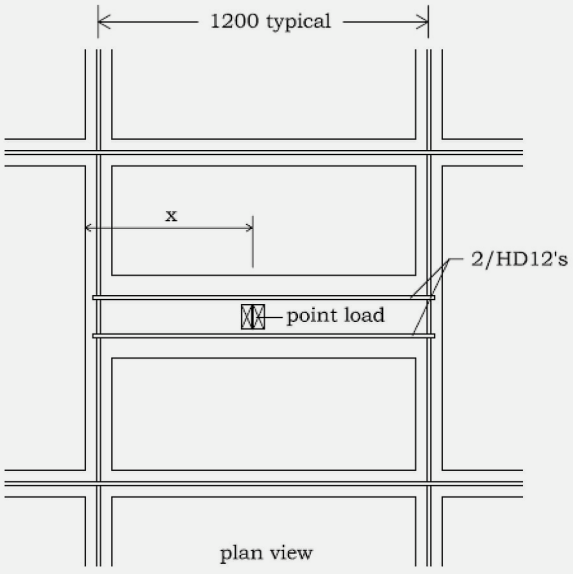

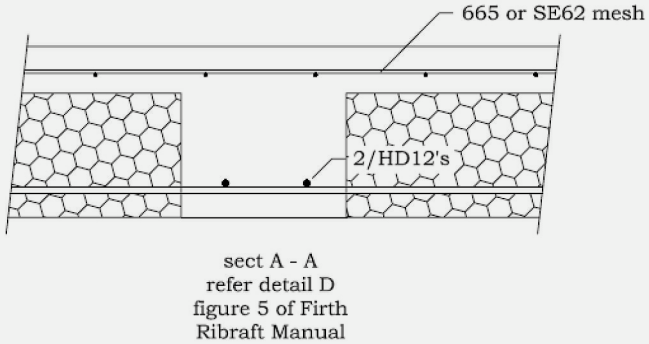

KDC - Approved Building Consent Document - BC210208 - Pg 107 of 197 - 2/07/2021 - ComplyNZ

4.6 Mesh Reinforcement

The entire floor slab shall be reinforced with 665 or SE62 mesh supported on 40mm mesh chairs sitting on the polystyrene pods.

4.7 Re-entrant Corners

In order to limit the width of cracking at the re-entrant, or internal corners, extra steel shall be placed on top of the mesh. These shall be 2-HD12 bars (Grade 500E), 1200mm long tied to the top of the mesh at 200mm centres, with 50mm cover from the internal corner – refer Figure 3.

KDC - Approved Building Consent Document - BC210208 - Pg 108 of 197 - 2/07/2021 - ComplyNZ

Figure 5
Standard RibRaft®
Construction Details

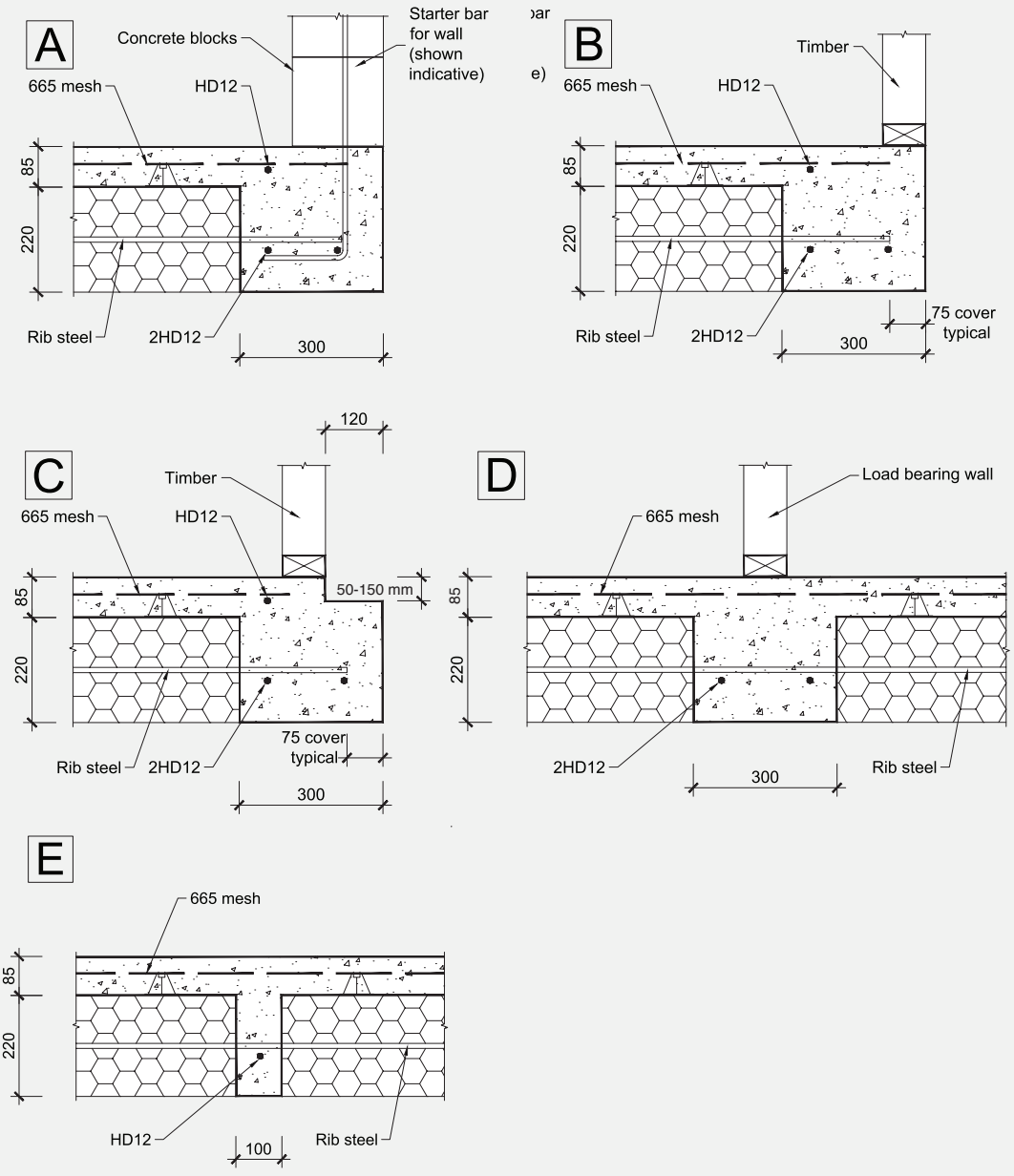

5.0 LATERAL RESISTANCE

5.1 Earthquake Resistance

Unlike conventional foundation systems, the Firth RibRaft® system is not embedded into the ground. Sliding resistance to horizontal seismic loads is provided by frictional contact with the soil. In locations where the Seismic Hazard Factor Z is greater than 0.45, shear keys maybe required to resist seismic loads. Such buildings require specific engineering design and are outside the scope of this document. Refer to Figure 6.

Depending on the wind zone and the weight of the building elements this frictional resistance may not be sufficient to provide sliding resistance to wind loads, and specific shear keys may be required, as detailed in Clause 5.2.

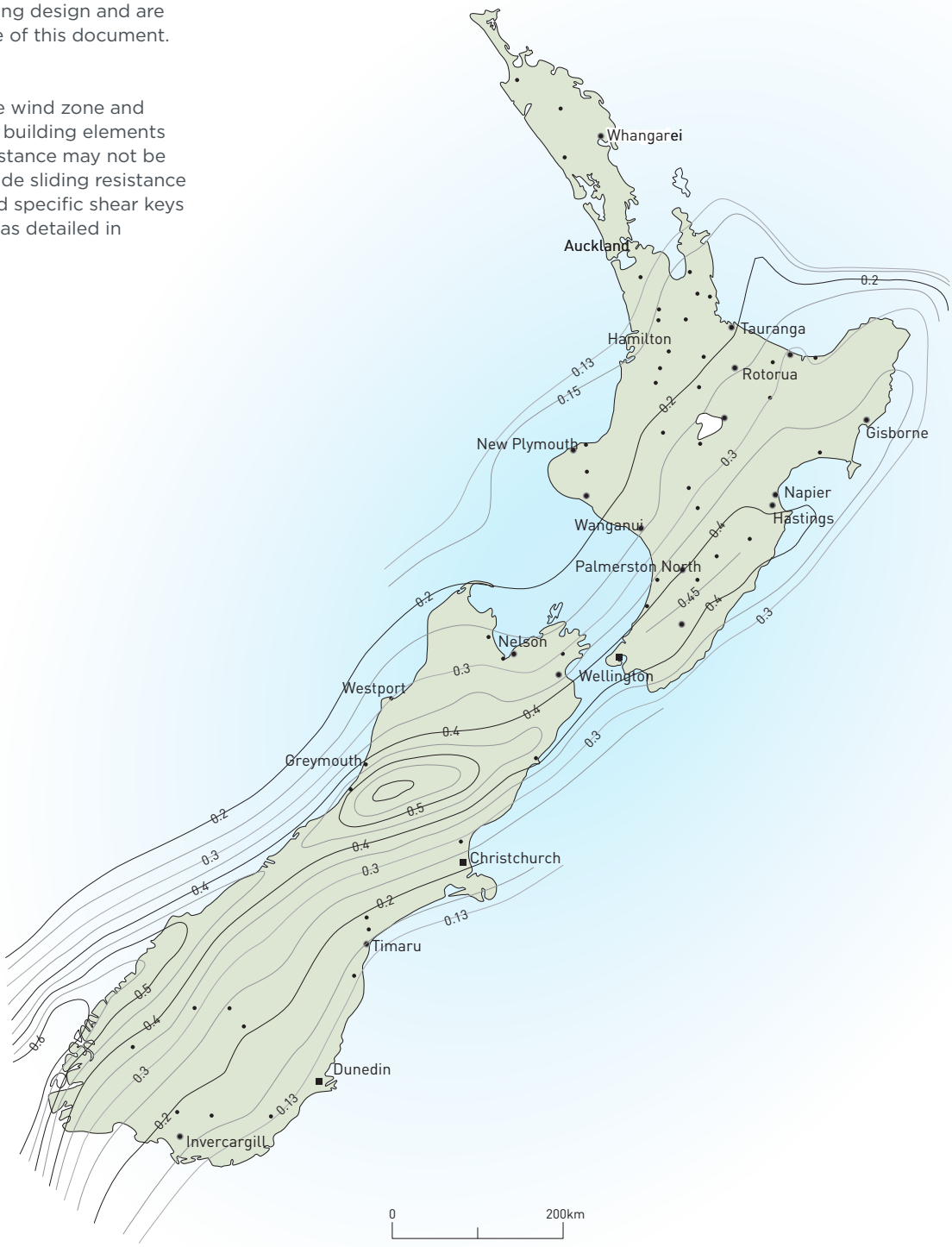

Figure 6
Seismic Hazard Factor Z to NZS 1170.5

KDC - Approved Building Consent Document - BC210208 - Pg 109 of 197 - 2/07/2021 - ComplyNZ

KDC - Approved Building Consent Document - BC210208 - Pg 110 of 197 - 2/07/2021 - ComplyNZ

5.2 Wind Resistance

The building's bracing demand from wind loading shall be assessed from Section 5 of NZS 3604:2011 for both directions (i.e. along and across the building). The bracing capacity of the system must exceed the greater of the bracing demands determined.

The bracing capacity of the system shall be determined as the sum of the bracing capacity provided by frictional resistance (i.e. friction between the system and the ground) and the bracing capacity provided by the shear keys (if any) necessary to meet the requirements of Clause 5.2.

The bracing capacity provided by frictional resistance shall be determined from Table 4 depending on the building type, roof weight, and floor live loading. The bracing capacity provided by the shear keys shall be the sum of the bracing capacity of the individual shear keys determined as follows. If the shear key is in clay, each shear key shall be considered to contribute 170 BU's. If the shear key is in sand, each shear key shall be considered to contribute 200 BU's. If the bracing capacity of the system, determined from the frictional resistance and the shear keys as described above, is less than the bracing demand further shear keys shall be added until the bracing demand is met.

BUILDING TYPE	ROOF TYPE	GROUND FLOOR EXTERNAL WALLS	SECOND STOREY EXTERNAL WALLS	BU's PROVIDED PER 100M² 1.5KPA	FOR LIVE LOADING OF: 3.0KPA
Single Storey	Light	Light		1630	1746
Single Storey	Heavy	Light		1737	1857
Single Storey	Light	Heavy		1802	1922
Single Storey	Heavy	Heavy		1909	2029
Double Storey	Light	Light	Light	2163	2403
Double Storey	Heavy	Light	Light	2270	2510
Double Storey	Light	Heavy	Light	2335	2575
Double Storey	Heavy	Heavy	Light	2442	2682

Table 4 Bracing Capacity Provided By Frictional Resistance Per 100m² Of Ground Floor Area

5.3 Shear Keys

Shear key piles required by Clause 5.2 must be uniformly distributed around the perimeter of the building, and be located at the edge beam/internal rib junction. Where a shear key is required, the minimum number of shear keys shall be two per floor plan. Where two shear keys are used they shall be placed at diagonally opposite ends of the floor plan.

Construction details of the shear keys shall be as shown on Figure 7. Shear keys shall be a minimum of 900mm long. The holes shall be over-drilled at least 100mm and a polystyrene RibRaft® Shear Key Support placed into the bottom of each hole. This will support only the plastic (wet) concrete and then allow movement of the shear key if settlement of the supporting ground occurs. The effective end bearing of the shear keys is therefore eliminated.

Figure 7 RibRaft® Shear Key

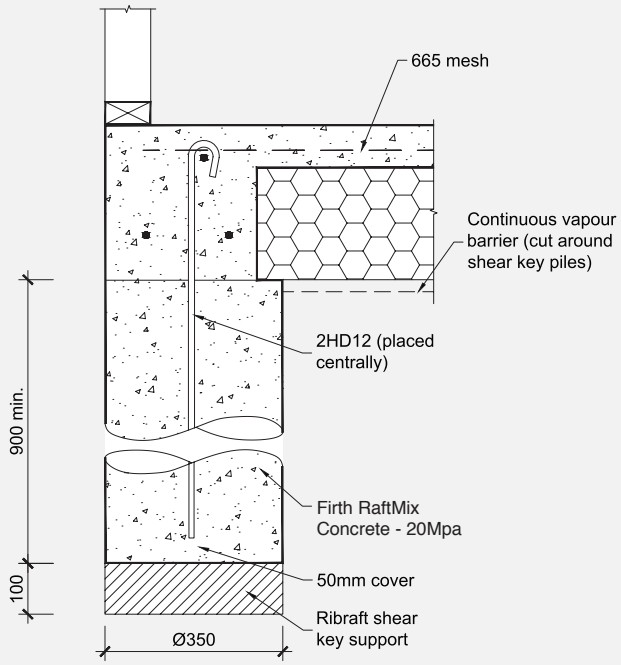

5.4 Design Example For Lateral Resistance Calculation

The following is a short example to demonstrate the process of determining whether shear piles are required.

Consider a 180m^2 single storey home with a light roof located in Palmerston North in a VH wind zone as defined by NZS3604. Assume the building height is 6m with 3m above the eaves. The length for across wind considerations is 15m and the width (along wind) is 12m.

First consider seismic actions. From Figure 6 the seismic hazard factor is 0.4. Since this is less than 0.45 shear keys will not be required for earthquake resistance.

Now consider wind loading. Table 5.5 of NZS3604 requires 95 bracing units per meter (BU/m) across the building and 90 BU/m along. As it's a very high wind zone these figures need to be increased by a factor of 1.3.

The BU demand for across building wind is therefore = 95 x 1.3 x 15 = 1853BU
The BU demand along the building = 90 x 1.3 x 12 = 1404BU

From Table 4 for a single storey light weight roof with 1.5kPa live load the capacity is 1630BU per 100m^2. Therefore for 180m^2 the capacity is 2934BU. As the capacity (2934) is greater than the demand (1853) no shear keys are required.

If the demand had exceeded the capacity then any shortfall can be provided by supplying shear keys in accordance with Section 5.3 with each shear key providing the BU specified in Section 5.2.

KDC - Approved Building Consent Document - BC210208 - Pg 111 of 197 - 2/07/2021 - ComplyNZ

6.0 OTHER DESIGN DETAILS

6.1 R-Values

The insulation performance of a building element is measured by the "R-Value". The schedule method is the simplest method to achieve compliance with Clause H1 of the Building Code. Using this method the minimum R-Values required for floors are R1.3 for light timber frame construction, and typically R1.5 for masonry construction. R-values of R1.3 can be used for masonry construction if glazing with greater insulation is used (refer NZBC, Clause H1). If in-floor heating is used the minimum required R-Value is increased to R1.9, and the resistance to thermal movement into the room must be one tenth of that to the outside environment.

The fourth edition of H1 (amendment 3, January 2017) states that "Concrete slab-on-ground floors are deemed to achieve a construction R-value of 1.3, unless a higher R-value is justified by calculation or physical testing". RibRaft® is therefore a deemed to comply solution however in some instances designers may wish to determine the R-value as part of the design process. There are numerous methods for calculating R-values for slabs on ground, with many of the processes giving quite different R-values. NZBC clause H1 prescribed that an "Acceptable methods for determining the thermal resistance (R-values) of building elements are contained in NZS 4214."

The R-values provided in this Manual use the NZS4214 methodology.

If the R-value calculation is required to demonstrate compliance with the Building Code, then the NZS4214 methodology is probably the best alternative due to its refrerence in H1. However, more technically robust calculation methodologies exist and and where the R-values are important, for example heated floors, use can be made of the BRANZ Home Insulation Guide. For these instances edge insulation is also recommended.

When slab edge insulation is specified, it is recommended that Firth HotEdge® is used as it has been designed to be compatable with Firth RibRaft®.

The R-Value of a concrete floor is dependent on the floor area to perimeter ratio, and the details of the floor perimeter. The R-Value for various solutions are illustrated below. The R-Values have been independently calculated using NZS4214:2006 "Methods of Determining the Total Thermal Resistance of Parts of Buildings," though modified for perimeter heat loss using recommendations from the Building Research Establishment.

KDC - Approved Building Consent Document - BC210208 - Pg 112 of 197 - 2/07/2021 - ComplyNZ

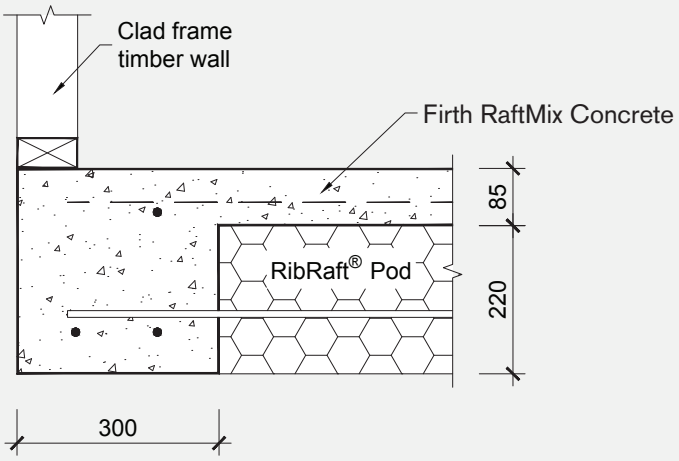

Figure 8
RibRaft® R Values For 90mm Thick Walls On The Floor Edge

	FLOOR AREA TO PERIMETER RATIO M²/M										
	1.00	1.25	1.50	1.75	2.00	2.25	2.5	2.75	3.0	3.5	4.00
R-Value m² °C/W	1.28	1.40	1.52	1.64	1.75	1.86	1.97	2.07	2.17	2.38	2.57

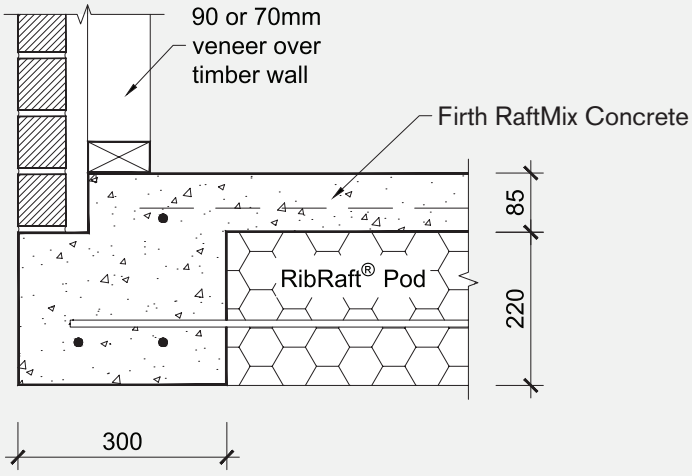

Figure 9
RibRaft® R Values For 70-90mm Thick Veneer, Cavity, and 90mm Walls.

	FLOOR AREA TO PERIMETER RATIO M²/M									
	1.25	1.50	1.75	2.00	2.25	2.5	2.75	3.0	3.5	4.00
R-Value m² °C/W	1.54	1.67	1.80	1.93	2.05	2.17	2.28	2.40	2.62	2.84

KDC - Approved Building Consent Document - BC210208 - Pg 113 of 197 - 2/07/2021 - ComplyNZ

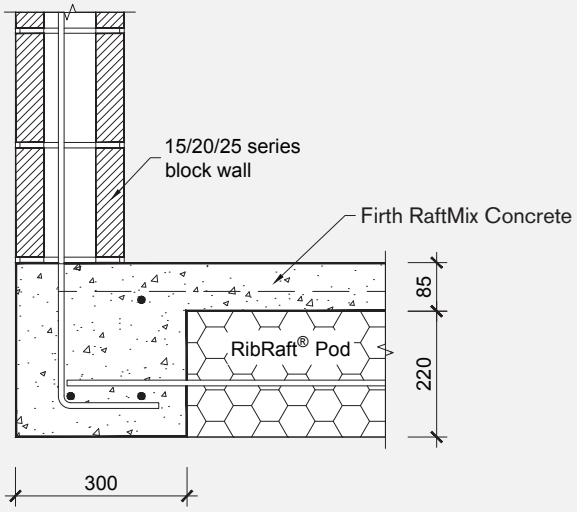

Figure 10
RibRaft® R Values For Various Thicknesses Of Masonry Walls

	BLOCK	FLOOR AREA TO PERIMETER RATIO M²/M									
		1.25	1.50	1.75	2.00	2.25	2.5	2.75	3.0	3.5	4.00
R-Value m² °C/W	15 SERIES	1.48	1.60	1.73	1.85	1.96	2.08	2.19	2.30	2.51	2.72
	20 SERIES	1.54	1.67	1.80	1.93	2.05	2.17	2.28	2.40	2.62	2.84
	25 SERIES	1.59	1.73	1.86	1.99	2.12	2.24	2.37	2.49	2.72	2.95

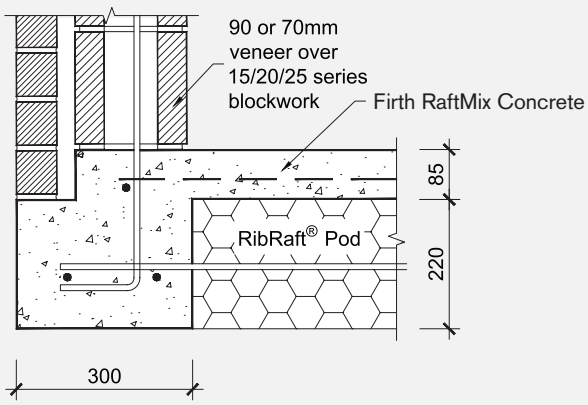

Figure 11
RibRaft® R-Values For 70-90mm Thick Veneer, Cavity, And Various Thickness Masonry Walls

	BLOCK	FLOOR AREA TO PERIMETER RATIO M²/M									
		1.25	1.50	1.75	2.00	2.25	2.0	2.75	3.0	3.5	4.00
R-Value m² °C/W	15 SERIES	1.59	1.73	1.86	1.99	2.12	2.24	2.37	2.49	2.72	2.95
	20 SERIES	1.64	1.78	1.92	2.06	2.19	2.32	2.44	2.56	2.81	3.04
	25 SERIES	1.69	1.83	1.98	2.11	2.25	2.38	2.51	2.64	2.88	3.12

6.2 Shrinkage Control

Shrinkage control joints reduce the risk of unwanted cracks, and their placement needs to be carefully considered where uncontrolled cracking could be unacceptable. Two types are described here: saw cut joints (which are tied joints), and free joints.

KDC - Approved Building Consent Document - BC210208 - Pg 114 of 197 - 2/07/2021 - ComplyNZ

6.2.1 Saw Cut Joints

Saw cuts are located at positons in which the concrete is likely to crack due to stresses induced by restrained shrinkage. The aim of providing them is for the concrete to crack at the bottom of the saw cut thus minimizing the potential for a visible crack wandering over the surface. The level of reinforcement provided in a RibRaft® mean that cracks have no structural implications being only an aesthetics issue. Factors to consider are the type of floor finish, the location of ribs and ground beams, underfloor heating, and the effect of piles restraining shrinkage.

Preference should be given to using early entry saws which are used immediately after finishing. Shrinkage control joints cut using diamond blades shall be cut as early as possible which is typically within 24 hours of hardening in summer, and 48 hours in winter. They shall be cut to a depth of 25mm. Shrinkage control joints do not guarantee elimination of all visible or unwanted cracks but should minimise number.

Joints shall be positioned to coincide with major changes in floor plan. Where concrete is to be exposed, for example in a garage, or brittle covering placed over, the maximum intermediate bay sizes shall be limited to 5m. Bay dimensions formed by shrinkage control joints shall be limited to a maximum ratio of length:width of 1.5:1. Shrinkage control joints shall be placed over 100mm wide internal ribs wherever possible. Where a shrinkage control joint runs along the line of a 300mm wide load bearing rib, then the joint shall be located directly above one edge of that rib.

In order to limit the width of cracks at re-entrant, or internal corners, extra steel shall be placed on top of the mesh. These shall be 2-HD12 bars (Grade 500E), 1200mm long tied to the top of the mesh at 200mm centres, with 50mm cover to the internal corner – refer Figure 3.

6.2.2 Free Joints

Where the length of the floor exceeds 30m a free joint shall be provided as detailed in Figure 12. Movement, shrinkage and thermal, will occur over this joint so it shall be positioned to minimize the impact of this movement on floor coverings and wall elements.

Where the bottom of the RibRaft® is not flat (for example the floor incorporates a step down), free joints shall be provided if the distance from the step down to edge of slab exceeds 15m.

Figure 12
Free Joint Details

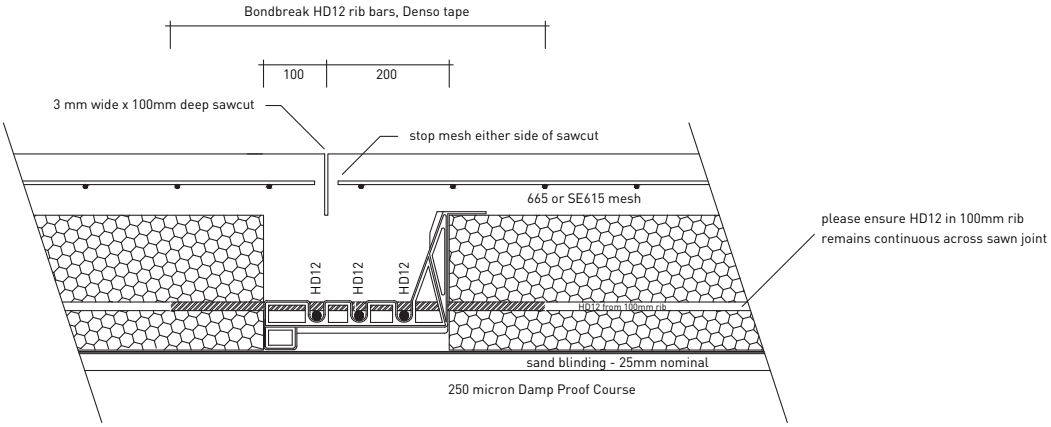

RibRaft® control / free joint detail at 300mm wide thickening
align sawcut with internal corner where possible

6.3 Services Detailing

Two options exist for running services, both of which are appropriate, however some regional Building Control Authorities and Builders have clear preferences. The options being within slab, or under slab. Experience from the Christchurch earthquakes shows that the most seismically robust solution is for services to run within the plane of the pods (within slab).

KDC - Approved Building Consent Document - BC210208 - Pg 115 of 197 - 2/07/2021 - ComplyNZ

6.3.1 Within Slab Running of Services

Pipes services can be run within the plane of the pods either exiting out of the side of the perimeter ring beam or going underground at the edge beam. Pipes shall be laid at a fall to comply with NZBC G13/AS1. For pipe up to 65mm diameter the minimum gradient is typically 1 in 40, while for 100mm pipes it's 1 in 60, however greater falls may be required dependent upon the required number of discharge units. Table 5 provides distances from the edge of the slab to pipe surface penetration to achieve minimum pipe gradients. A 300mm pod alternative is often used where the proposed positioning of the service means minimum required gradients cannot be achieved. Where gradients cannot be achieved with a 300mm pod, then service will require to be run under the slab.

Pipes shall be located to pass perpendicular to the ribs and beams and shall not be laid along the length of ribs or beams. Pods are cut as required to achieve the required fall and position. Pipes shall be laid to ensure 15mm concrete cover between pipe and reinforcement in the perimeter beam. All pipes in contact with concrete shall be lagged with an impermeable material of at least 6mm thickness.

Table 5 Maximum Distance From Exterior To Entrance Point Of Plumbing Pipes

PIPE DIAMETER (ID)MM	GRADIENT	MAXIMUM DISTANCE TO EDGE WITH 220MM THICK POD	MAXIMUM DISTANCE TO EDGE WITH 300MM THICK POD
40	1 in 40	3400	6600
50	1 in 40	3000	6200
65	1 in 40	2400	5600
100	1 in 60	1200	4400

6.3.2 Under Slab Running Of Services

For this option, services ducts shall be conveyed underground to their plan location then brought up through the polystyrene pod and the concrete floor slab, within the limitation imposed by Table 8. Services shall not be placed within any concrete except to cross that section of concrete i.e. services shall not run along ribs or edge beams. In accordance with AS/NZS3500.4:2015 pipes penetrating through concrete shall be:

> Installed at right angles to the slab surface.

> Lagged with an impermeable material for the full depth of the concrete penetration.

> Lagging must be at least 6mm thick.

The maximum diameter of the services shall be as outlined in Table 6.

Any services crossing ribs or the edge beam horizontally shall be placed only within the middle third of the member. Except as noted in Figure 13, services crossing the ribs vertically shall also be constrained to the middle third of the width of the edge or internal load bearing rib. Except as noted in Figure 15 at no stage shall any of the reinforcement bars be relocated or cut to allow for the services (it is acceptable, however to cut the mesh). In some instances this will dictate the location of the ribs. The pods shall be cut to allow for this and if necessary, the spacing of the ribs shall be decreased locally. There shall be 600mm minimum clear spacing in each direction between penetrations through the system.

KDC - Approved Building Consent Document - BC210208 - Pg 116 of 197 - 2/07/2021 - ComplyNZ

Table 6 Maximum Diameter Of Pipe Services

ELEMENT	VERTICAL SERVICE	HORIZONTAL SERVICE
300mm wide edge beam	50mm nominal bore pipe	100mm NB pipe
500mm localized wide edge beam (1)	100mm NB pipe	100mm NB pipe
300mm wide internal load bearing rib	50 NB pipe	100mm NB pipe
100mm wide internal rib	Nil	100mm NB pipe
Slab	100 NB pipe, or for large services 450mm square see also Note 3	Nil

Notes:

(1) For situations where a 100mm diameter pipe is required to pass vertically through the edge beam, the edge beam shall be locally increased in width to a minimum of 500mm wide. This shall be achieved by keeping flush the outside face of the edge beam and removing 200mm from the pod. The width shall remain at 500mm for a distance of 600mm beyond the service pipe. Refer to figure 14 for details for pipes passing vertically through edge beam and internal rib.

(2) Where a gas pipe line runs through the RibRaft® floor system, in addition to the requirements above, the pipeline shall enter the building through the outside face of the perimeter foundation beam and be located in the plane of the pods. The aim being to ensure that damage to the gas pipe will most likely occur outside the building envelope should movement occur between the ground and RibRaft® in a large earthquake.

(3) Larger penetrations or voids up to 450mm square (e.g. for shower waste/traps) are permitted through the slab provided all the conditions of this paragraph are met. These openings shall be trimmed with 1 HD12 (Grade 500E) bar 1500mm long placed along each side of the opening, tied to the mesh. One set of parallel bars shall be placed on top of the mesh and the other set placed under the mesh. These openings shall not be placed over a rib or edge beam. If necessary, the rib spacing shall be reduced or the pod layout altered to ensure that the opening occurs solely in the slab above a polystyrene pod. Penetrations such as these shall not be installed in garages or other areas where large (>3kN) point loads could be present. Only one penetration greater than 110mm is permitted in the slab above any single pod or part pod. Where two large openings are required to be in close proximity, an internal rib shall separate them. For these large penetrations/voids in the slab, the services shall not be within 25mm of the edges of the void through which they pass, and the opening shall be sealed to prevent materials entering the subfloor cavities. (This type of opening is normally only required for a shower waste/trap and the installation of the shower will ensure that the void is sealed/covered).

A pictorial of some of the above requirements is illustrated in Figure 13 and 14.

Figure 13 Example of Detailing Requirements For Services

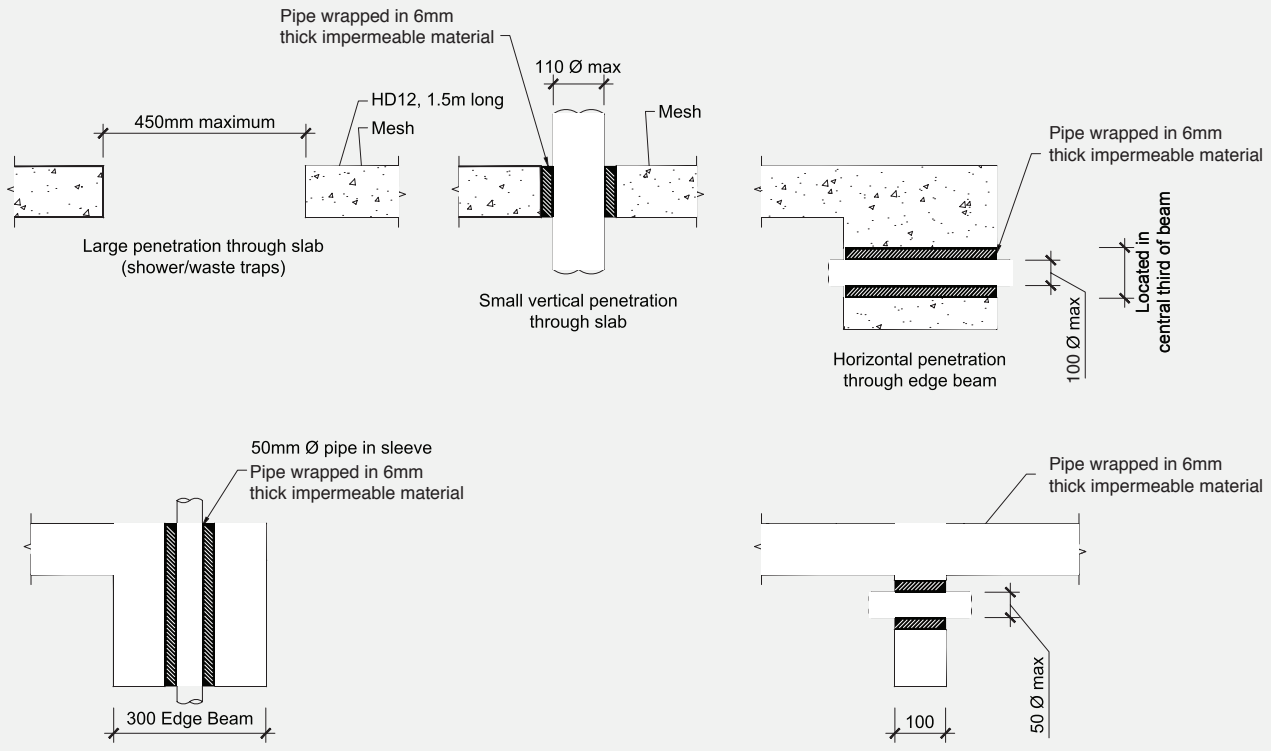

Figure 14
Localised Increase In Width At Edge Beam Where Vertical Service Up To 100mm Diameter Are Required

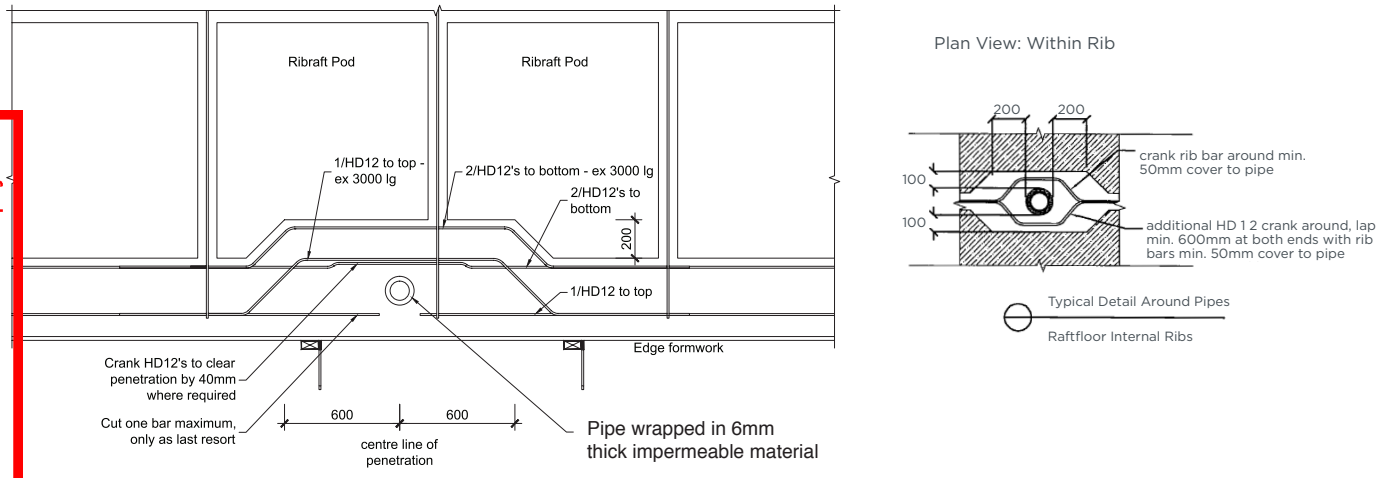

KDC - Approved Building Consent Document - BC210208 - Pg 117 of 197 - 2/07/2021 - ComplyNZ

6.3.3 Recesses for Showers

Where showers are rebated up to 50mm into the RibRaft® concrete topping, the details specified shall be in accordance with Figure 15.

Figure 15 Details where recesses of up to 50mm are required for rebated showers

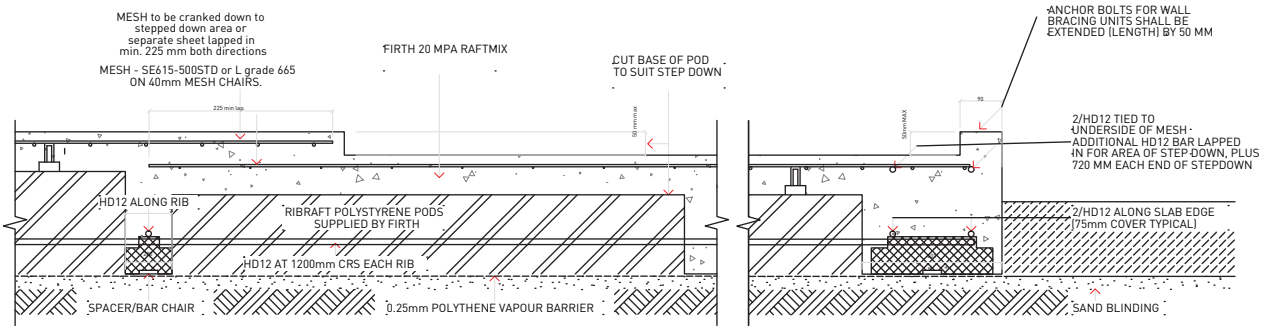

RIB RAFT FLOOR - SET-DOWN DETAIL FOR MAX. 50mm REBATED SHOWER

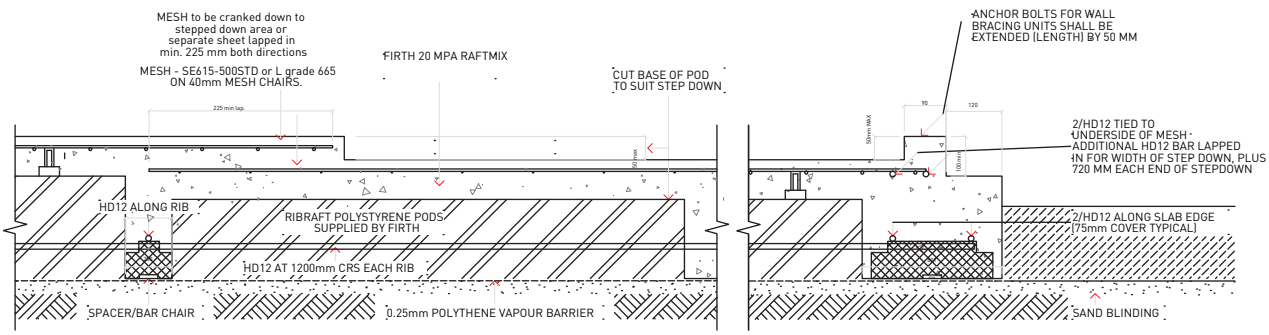

RIB RAFT FLOOR - SET-DOWN DETAIL FOR MAX. 50mm REBATED SHOWER

KDC - Approved Building Consent Document - BC210208 - Pg 118 of 197 - 2/07/2021 - ComplyNZ

Figure 16 Details where step downs are required in the floor

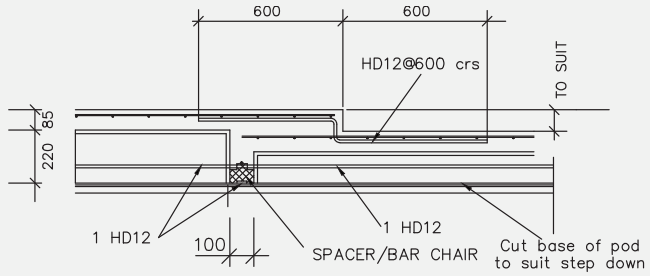

7/S2 SET–DOWN DETAIL FOR STEP UP TO 100mm
1:20

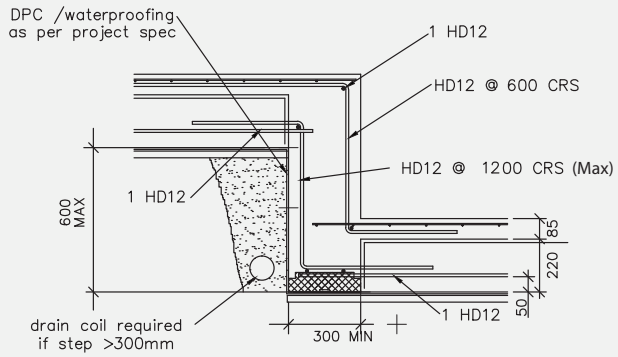

9/S2 SET–DOWN DETAIL IN CONCRETE FOR STEP LESS THAN 600mm
1:20

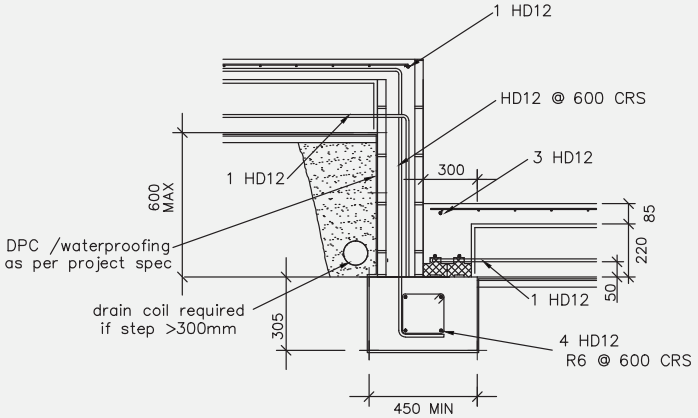

8/S2 SET–DOWN DETAIL IN MASONRY FOR STEP LESS THAN 600mm
1:20

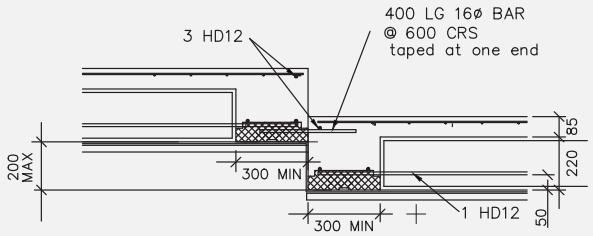

10/S2 SET–DOWN DETAIL FOR STEP 100 TO 200mm FOR SEPARATELY POURED SLABS
1:20

6.3.4 Step Down Of Up To 600mm In The RibRaft® Floor

Where the site topography requires a step down in the slab, steps of up to 600mm can be accommodated using one of the details provided in Figure 16. A step down in the RibRaft® floor system anchors the floor in that location with respect to volume changes associated with drying shrinkage. As required by 6.2.2, a free joint shall be provided if the distance from the step down to the slab edge exceeds 15m.

SECTION: INSTALLATION INFORMATION

2

1.0 THIS SECTION DETAILS THE INSTALLATION INFORMATION REQUIRED FOR THE FIRTH FIBRAFT® FLOOR SYSTEM (THE SYSTEM). FULL INFORMATION ON THE DESIGN PROCEDURES NOT REQUIRING SPECIFIC ENGINEERING INPUT, AND REQUIREMENTS FOR THE SITE ASSESSMENT ARE DESCRIBED IN SECTION 1 OF THIS MANUAL (DESIGN INFORMATION). WHERE STANDARDS ARE REFERENCED INTHIS MANUAL THESE SHALL INCLUDE THE LATEST AMENDMENTS.

KDC - Approved Building Consent Document - BC210208 - Pg 119 of 197 - 2/07/2021 - ComplyNZ

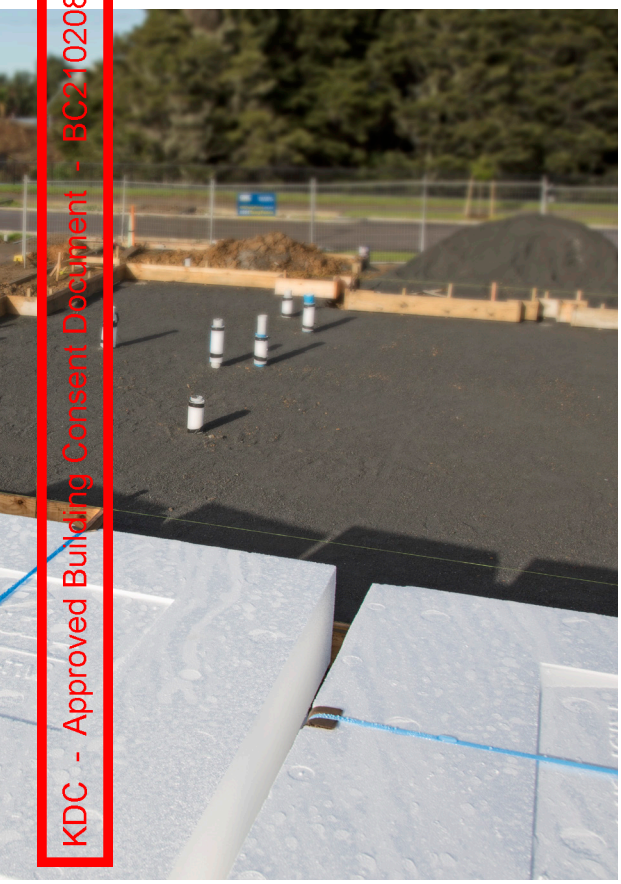

2.0 SITE REQUIREMENTS

2.1 General

The site requirements of this Manual are concerned solely with the soil conditions under or immediately adjacent to the system. If a site does not comply with this Manual, the system shall be subject to specific engineering design.

This Section shall only apply for building sites such that:

> The ground is as specified in Section 1 of this Manual;

> Any system erected at the top of a slope (whether fill compacted in accordance with NZS4431, or natural ground) shall be located as shown in Figure 1 so that the finished ground is always outside the dashed line shown. (The vertical distance, V, shall be measured to 50mm below the underside of the slab).

Where the finished ground does not comply with Figure 1, the slope shall be retained by a specifically designed retaining wall.

2.2 Temporary Excavations

No excavation shall take place at a location or in a manner where the stability of the foundation material is likely to be compromised. The backfilled material shall match the compaction and strength of, and have similar properties to, the surrounding material. The sides of the excavation shall be propped as necessary.

Temporary excavations shall be open for no longer than 48 hours and shall take place only above the critical depth line as shown on Figure 2. Should temporary excavations be required below this line, specific engineering design is required.

2.3 Surface Water

Surface water from the site shall not flow across the slab platform. For example, on cut and fill sites the ground uphill from the system shall be graded to direct any surface run-off away from the system as shown in Figure 3.

KDC - Approved Building Consent Document - BC210208 - Pg 120 of 197 - 2/07/2021 - ComplyNZ

Figure 1
Relationship Of RibRaft® To Sloping Ground Surface

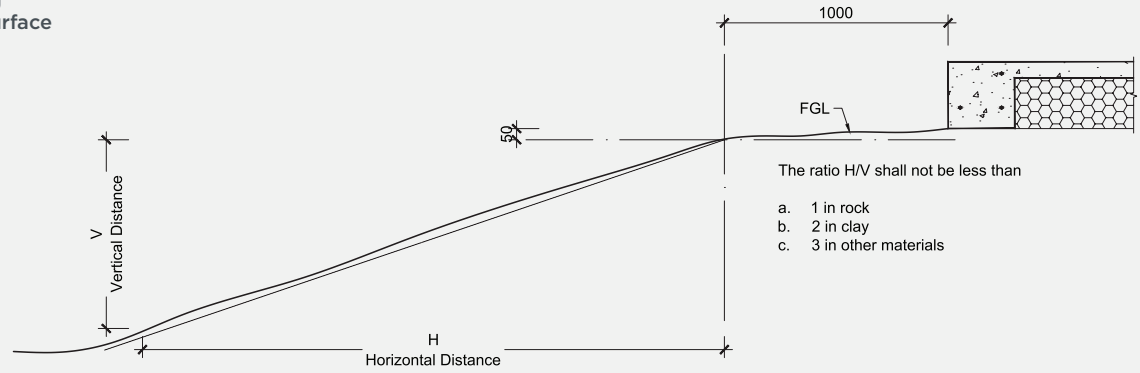

Figure 2
Temporary Excavation Limited

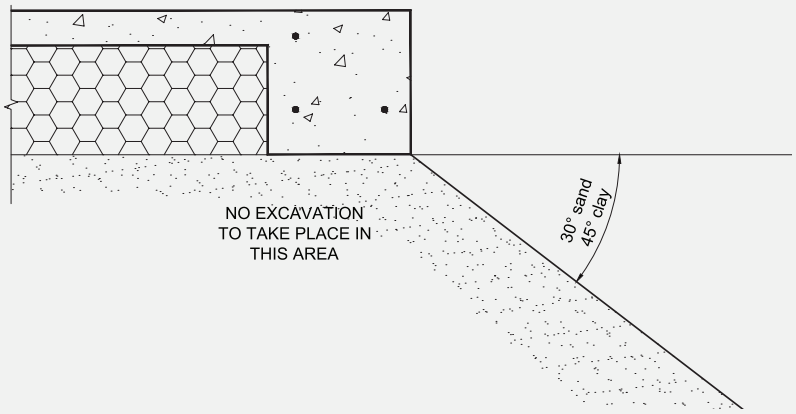

Figure 3
Site Grading

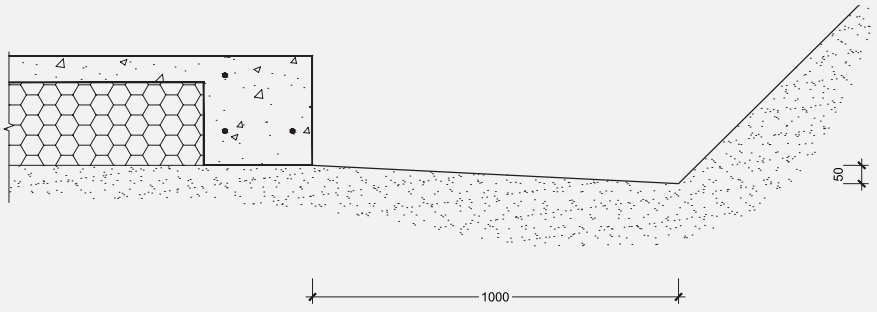

3.0 INSTALLATION PROCEDURE

3.1 Site Preparation

All vegetation, topsoil and other organic or deleterious material shall be removed from the area to be covered by the building (formation area) prior to commencing construction of the system.

KDC - Approved Building Consent Document - BC210208 - Pg 121 of 197 - 2/07/2021 - ComplyNZ

3.2 Earthworks

The formation area shall be cut or filled to a level approximately 330mm below finished floor level. Where fill is required to achieve this level, the fill shall be certified by a geotechnical engineer (outside the scope of this Manual) or shall be granular fill in accordance with Clause 7.5.3 of NZS 3604:2011 "Timber Framed Buildings". The formation area shall also extend a distance equal to the thickness of the fill material beyond the slab perimeter as shown in Figure 4. The installer shall confirm the acceptability of the ground over the entire building platform before proceeding with the construction. Refer to Clause 3.5 of Section 1 (Design Information) for requirements.

Figure 4 Plan of Formation Area

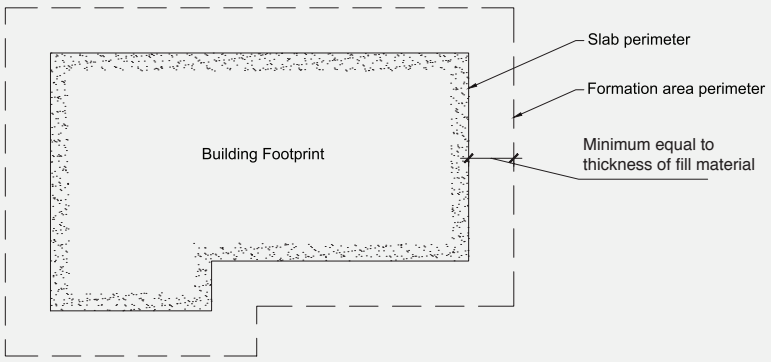

3.3 Shear Keys

Where shear keys are required, the holes shall be drilled following the site clearing and earthworks, in accordance with Clause 4 in this section, and prior to the construction of the system commencing.

3.4 Plumbing and Services

Plumbing and services required beneath the system should preferably be conveyed underground to their plan location then brought up through the system.
The trenching, placing, and bedding of the pipes/ducts and the backfilling of the trenches shall conform to the requirements of the consent documentation. Services shall not run along ribs or edge beams. The maximum diameters of the services shall be as dictated in Clause 6.3 of Section 1.

Where required, the services can be installed by removing unnecessary polystyrene and placing pipes within the pod depth. All pipes shall be held firmly in place and have temporary end covers. Any services crossing ribs or the edge beam horizontally shall be placed only within the middle third of the member. Except as noted in Figure 14 (Section 1) services crossing the ribs vertically shall also be constrained to the middle third of the width of the edge or internal load bearing rib. Except as noted in Figure 13 (section 1) at no stage shall any of the reinforcement bars be relocated or cut to allow for the services (it is acceptable, however to cut the mesh). In some instances this will dictate the location of the ribs. The pods shall be cut to allow for this and if necessary, the spacing of the ribs shall be decreased locally. There shall be 600mm minimum clear spacing in each direction between penetrations through the system.

Where the services pass through the top of the pods, the opening shall be sealed to prevent materials entering the subfloor cavities. (This can be achieved with Denso tape and a type of easily compressible foam.)

Larger penetrations or voids that are required, up to 450mm square (e.g. for shower waste/traps), shall be installed in accordance with all the conditions of this paragraph. These openings shall be trimmed with 1 HD12 bar (Grade 500E) 1500mm long placed along each side of the opening, tied to the mesh. One set of parallel bars shall be placed on top of the mesh and the other set placed under the mesh. These openings shall not be placed over a rib or edge beam. If necessary, the rib spacing shall be reduced or the pod layout altered to ensure that the opening occurs solely in the slab above a polystyrene pod. Penetrations such as these shall not be installed in garages or other areas where large (>3kN) point loads could be present. Only one penetration greater than 110mm is permitted in the slab above any single pod or part pod. Where two large openings are required to be in close proximity, an internal rib shall separate them. For these large penetrations/voids in the slab, the services shall not be within 25mm of the edges of the void through which they pass, and the opening shall be sealed to prevent materials entering the subfloor cavities. (This type of opening is normally only required for a shower waste/trap and the installation of the shower ensure that the void is sealed/covered).

Where a recess of up to 50mm is required in the topping to provide a rebate for a shower, the construction details shall be as shown in Figure 15 (Section 1).

KDC - Approved Building Consent Document - BC210208 - Pg 122 of 197 - 2/07/2021 - ComplyNZ

3.5 Sand Blinding

A layer of sand shall be placed, screeded and compacted over the building platform, extending to the outside edge of the perimeter foundation, refer Figure 5. The maximum thickness of this blinding layer shall be 50mm. The surface shall be level and a minimum of 305mm below finished floor level. A small plate compactor, vibrating roller or similar, should be used to compact the sand blinding layer. When the building platform is clay, it is essential that the blinding sand is compacted onto a clay surface that has not been softened by construction activities. If the clay has been softened (i.e. has a muddy surface layer due to construction activities), remove the softened material from under the RibRaft® ribs before placing the sand. If excavation lowers the clay surface to more than 50mm below the underside of the RibRaft®, fill shall be placed in accordance with Clause 7.5.3 of NZS 3604:2011 “Timber Framed Buildings”. The sand is required to be level to ensure that pods remain stable throughout the installation of the system.

3.6 Damp Proof Membrane

The damp proof membrane (DPM) material shall be polyethylene sheet in accordance with NZS 3604:2011. The DPM shall be laid over the entire building platform directly on top of the sand blinding layer, extending to the outside of the edge beam – refer Figure 5 below. The joints shall be lapped not less than 150mm and sealed with pressure sensitive tape not less than 50mm wide. All penetrations of the DPM by plumbing and services or punctures during construction shall also be sealed with pressure sensitive tape. The DPM may extend beyond the edge of the slab i.e. underneath the formwork, or may be folded and stapled up the inside of the formwork. The minimum requirement is that the DPM extends to the outside of the edge beam. It is very important that the DPM is not bunched up at the formwork. The installer shall ensure a square and tidy finish at the underside and at all corners of the edge beam.

Figure 5 Sand blinding / DPM / Formwork Details

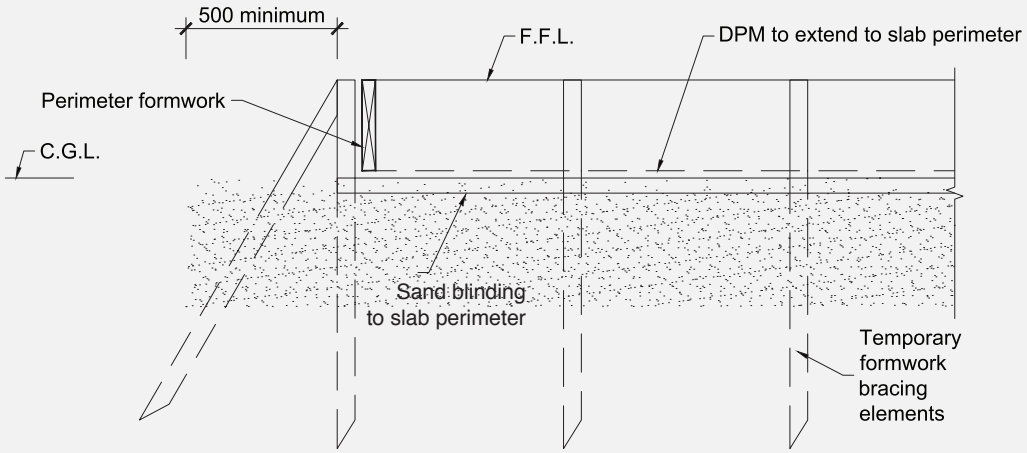

3.7 Edge Formwork

The edge formwork shall be constructed ensuring that the requirements of NZS 3109:1997 “Concrete Construction” are adhered to. The formwork shall be adequately supported and braced to prevent any buckling or warping. If the wall is to be constructed in masonry veneer, formwork for a masonry veneer rebate should be adequately fixed to the perimeter formwork.

Thorough cleaning of re-useable formwork and the use of release agents enhances the life and performance of formwork and maintains a quality surface finish.

KDC - Approved Building Consent Document - BC210208 - Pg 123 of 197 - 2/07/2021 - ComplyNZ

3.8 Laying the Pods and Spacers

The Firth RibRaft® polystyrene pods shall be laid out over the DPM in a regular waffle pattern ensuring direct contact with the ground across the entire pod. The edge beam shall be formed using the Firth approved 300mm spacers (refer Figure 9). These shall be placed at a maximum of 1200mm centres along the perimeter of the slab and one per pod or part pod. Ribs supporting a load bearing wall shall be formed using a minimum of one Firth approved 300mm spacer along the edge of each pod or part pod.

Except where a 300mm wide rib is required, each pod or part pod shall always be separated by 100mm using a minimum of one Firth approved 100mm spacer along each edge of each pod or part pod. The ribs in both directions shall form a waffle pattern throughout the slab. It is essential that the ribs and edge beams are straight when the concrete is poured, i.e. the pods need to be lined up. Figure 6 shows a detailed layout of the pods and spacers.

Where the shape of the house plan dictates, it may be more practical to consider the floor to be made up of different segments. The pods in each segment shall be in a regular waffle pattern – refer right hand side of Figure 7. Where these segments meet, the pods shall be cut to suit and the ribs made to join.The non right-angle rib junctions created by this approach are acceptable.

Alternatively, it is also acceptable to keep the orientation of the pods constant throughout the plan and have non right-angle junctions between the ribs and edge beam – refer left hand side of Figure 7.

As can be seen from Figure 7, it is not necessary for the pods to line up perfectly with the edge beam. It is acceptable to cut the pods (i.e. use part pods).

Figure 6
Detailed layout of Pods and spacers (mesh and top steel omitted for clarity)

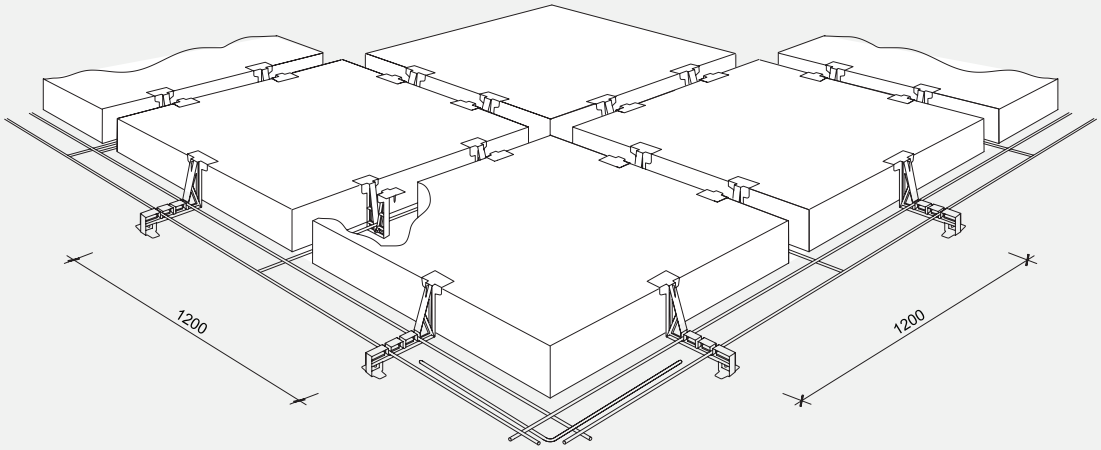

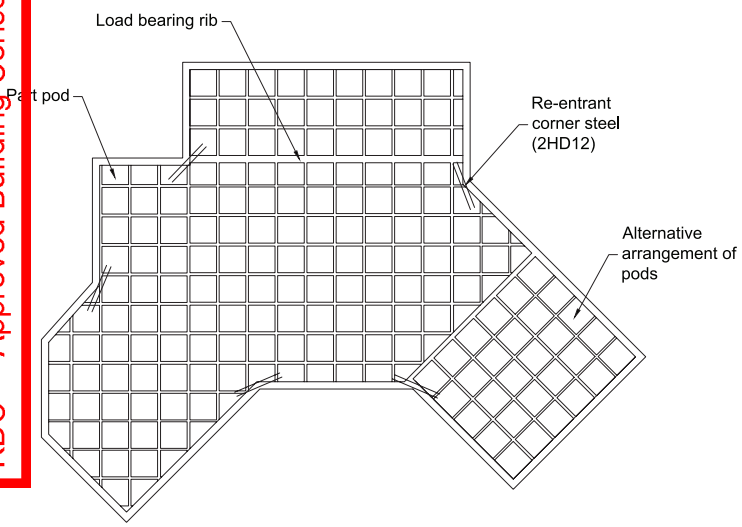

Figure 7 Typical Pod And Rib Layout

3.9 Reinforcing Steel

Reinforcing bars shall conform to NZS 4671:2001 “Steel Reinforcing Materials”. All bars shall be of deformed type (Grade 500E). All bends shall be made cold without fracture and in accordance with the bend diameters given in NZS 3109 “Concrete Construction”. Welded lap joints are not permitted.

Reinforcing steel in the slab shall consist of Welded Reinforcing Mesh complying with AS/NZS 4671:2001 with a minimum weight of 2.27kg/m, a lower characteristic stress of 500MPa, square configuration of orthogonal bars between 150 to 200mm centres, and ductility class L or E, hereafter referred to as “mesh”. The presence of Class E reinforcing bars in the ribs and beams provides adequate ductility of the system which allow the use of class L mesh. Typically the topping mesh reinforcement will be 665 mesh (class L) or SE62 ductile mesh, each being equally applicable

Figure 10 shows the detailed layout of the spacers and the steel in the edge beam and the standard ribs.

3.9.1 Edge Beam Steel

Two edge beam reinforcing bars shall be placed in the bottom of the edge beam and supported in the correct position by the Firth spacers, as shown in Figure 10. One edge beam bar shall be tied below the mesh at the perimeter of the area covered by the polystyrene pods as shown in Figure 10.

All steel shall be lapped a minimum of 60 bar diameters (720mm for 12mm steel). Tying of the edge beam steel is only required at corners. Figure 8 shows the layout for the edge beam bottom steel bars at the corner. The inner bottom bars and the top bars shall cross each other and extend to 75mm from the outside face of the edge beam as shown. These bars shall be tied together where they cross. For solutions using veneer rebates the top bars shall terminate 50mm from the inside face of the rebate and be tied where they cross.

KDC - Approved Building Consent Document - BC210208 - Pg 124 of 197 - 2/07/2021 - ComplyNZ

3.9.2 Rib Steel

Rib reinforcing steel shall be placed in the bottom of the internal ribs and supported in the correct position by the Firth or Wilton Joubert spacers (WJ). Figure 9 shows the detail of the Firth and WJ spacers, and Figure 10 shows a detailed section identifying how the steel is located in the spacers. The 300mm spacer shall be used for the 300mm wide internal ribs. These spacers ensure that cover to DPM below the base is greater than 45mm and cover to the exterior perimeter is 75mm.

All steel shall be lapped a minimum of 60 bar diameters (720mm for 12mm steel). At junctions with the edge beam, each rib steel bar shall sit on top of the edge beam bars, and extend to the outermost bar. The 75mm cover to the edge of the beam shall still be allowed for. One HD12 bar (Grade 500E) shall be placed in the bottom of each 300mm wide rib. For perimeter 300mm ribs a HD12 bar is also required in the top at the beam.

3.9.3 Mesh Reinforcing

Mesh reinforcing shall be placed over the pods and supported on 40mm mesh chairs spaced at a minimum of 1200mm centres, with at least two mesh chairs placed per pod and at least one per part pod. At laps the overlap of the outermost cross wires of the sheets shall be the spacing of the wires plus 50mm.

3.9.4 Re-entrant Corner Steel

Two HD12 bars (Grade 500E), 1200mm long tied to the top of the mesh at 200mm centres, with 50mm cover to the internal corner as detailed in Figure 7 (this steel is to help reduce the width of cracks that may develop at this location)

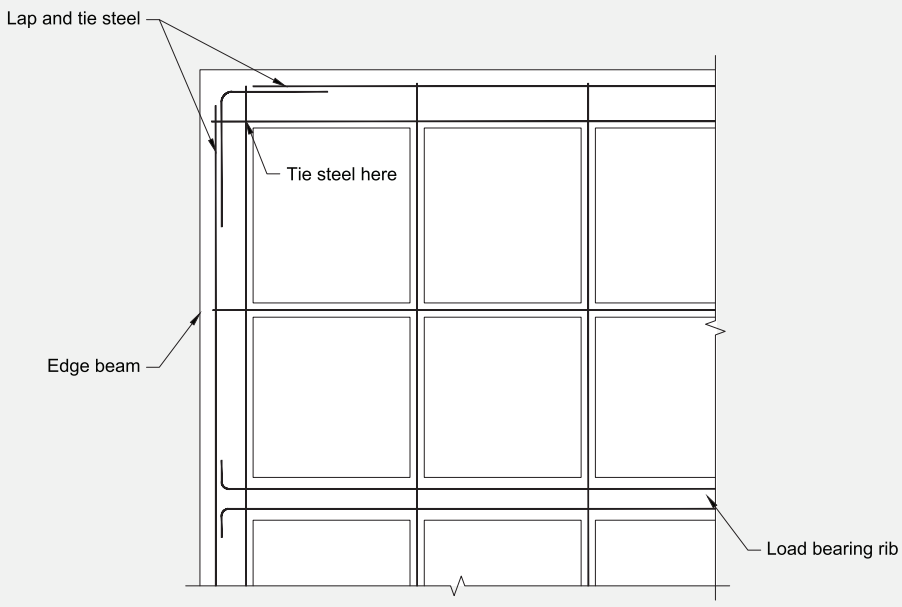

Figure 8 Corner steel layout

3.10 Concrete Installation

To comply with this manual, Firth Certified Concrete® must be used. Concrete placing, finishing and curing shall be in accordance with NZS 3109:1997, Clause 7.

3.10.1 Placing

Only Raftmix or Raftmix25 concrete supplied by Firth Industries, shall be used in the floor. These two different concrete mixes shall be used in the following instances:

> Raftmix – a 20MPa 100mm slump mix available as a pump mix suitable for 100mm pump lines available in either a 13mm or more usually a 19mm nominal aggregate size, or as a structural (non-pump) mix

> Raftmix25 – a 25MPa 100mm slump mix available as a pump mix suitable for 100mm pump lines available in either a 13mm or more usually a 19mm nominal aggregate size, or as a structural (non-pump) mix. This mix shall be specified for buildings constructed in the 'sea spray zone' (i.e. within 500m of the sea including harbors, within 100m of tidal estuaries or inlets, on offshore islands and elsewhere defined as exposure Zone D in 4.2.3.3 of NZS3604).

Figure 9
Spacer
Details

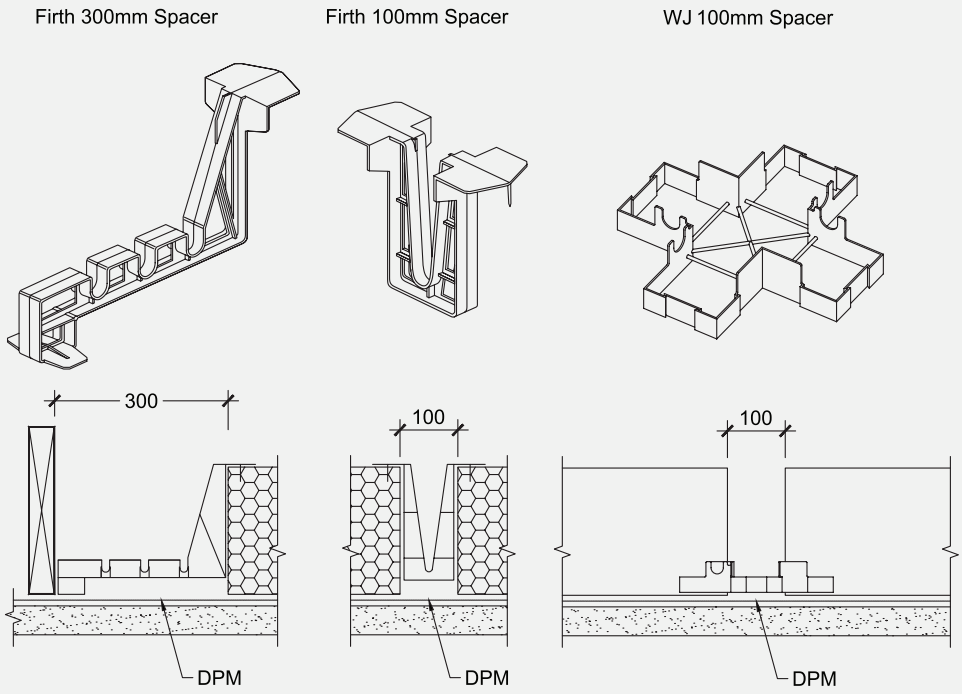

The concrete supplied by Firth shall be poured in such a way to ensure that the pods remain in position during placing (Firth recommends that small amounts of concrete be placed on top of the pods prior to the ribs being filled). The concrete shall be compacted with the use of an immersion vibrator around all steel and into all corners of the formwork.

KDC - Approved Building Consent Document - BC210208 - Pg 125 of 197 - 2/07/2021 - ComplyNZ

3.10.2 Finishing

Screeding with the aid of a level shall commence immediately after compaction. Unless specifically installed as a screeding datum, the top of the formwork shall not be assumed as level and thus shall not be used for screeding purposes. Final finishing with a trowel shall take place after all the bleed water has evaporated. The edge of the slab and rebates shall be tooled to prevent chipping of the top of the slab.

Early age care of the slab shall be in accordance with good trade practice appropriate for the weather conditions – refer CCANZ website sections if further guidance is required:

www.ccanz.org.nz/page/Early-Age-Crack-Control.aspx	Early Age Crack Control
www.ccanz.org.nz/page/Hot-and-Cold-Weather-Concreting.aspx	Hot and Cold Weather Concreting

The surface shall be a blemish-free surface to class U3 finish (Refer NZS 3114:1987 “Specification for Concrete Finishes”).

3.10.3 Curing

Proper curing of the concrete must take place immediately after finishing the concrete. One of the following methods of curing is recommended:

> Ponding or continuous sprinkling of water.

> Placing a wet covering or plastic membrane over the slab.

> The use of liquid membrane curing compounds. However if these are used, they must be compatible with any subsequent applied surfacing.

3.11 Shrinkage Control Joints

Shrinkage control joints reduce the risk of unwanted cracks, and their placement needs to be carefully considered where uncontrolled cracking could be unacceptable. Two types are described here: saw cut joints (which are tied joints), and free joints.

3.11.1 Saw Cut Joints

Saw cuts are located at positons in which the concrete is likely to crack due to stresses induced by restrained shrinkage. The aim of providing them is for the concrete to crack at the bottom of the saw cut thus minimizing the potential for a visible crack wandering over the surface. The level of reinforcement provided in a RibRaft® mean that cracks have no structural implications being only an aesthetics issue. Factors to consider are the type of floor finish, the location of ribs and ground beams, underfloor heating and the effect of piles restraining shrinkage.

When warm sunny days are followed by cool nights, the change in temperature can cause cracking. Hence preference should be given to using early entry saws which are used immediately after finishing. Shrinkage control joints cut using diamond blades shall be cut as early as possible which is typically within 24 hours of hardening in summer, and 48 hours in winter. They shall be cut to a depth of 25mm. Shrinkage control joints do not guarantee to eliminate all visible or unwanted cracks.

Joints shall be positioned to coincide with major changes in floor plan. Where concrete is to be exposed, for example in a garage, or brittle covering placed over, the maximum intermediate bay sizes shall be limited to 5m. Bay dimensions formed by shrinkage control joints shall be limited to a maximum ratio of length:width of 1.5:1. Shrinkage control joints shall be placed over 100mm wide internal ribs wherever possible. Where a shrinkage control joint runs along the line of a 300mm wide load bearing rib, then the joint shall be located directly above one edge of that rib.

In order to limit the width of cracks at re-entrant, or internal corners, extra steel shall be placed on top of the mesh. These shall be 2-HD12 bars (grade 500E), 1200mm long tied to the top of the mesh at 200mm centres, with 50mm cover to the internal corner – refer Figure 7.

KDC - Approved Building Consent Document - BC210208 - Pg 126 of 197 - 2/07/2021 - ComplyNZ

3.11.2 Free Joints

Where the length of the floor exceeds 30m a free joint shall be provided as detailed in Section 1, Figure 12. Movement, shrinkage and thermal, will occur over this joint so it shall be positioned to minimize the impact of this movement on floor coverings and wall elements.

Where the bottom of the RibRaft® is not flat (for example the floor incorporates a step down), free joints shall be provided if the distance from the step down to edge of slab exceeds 15m.

Figure 10 Detailed Section

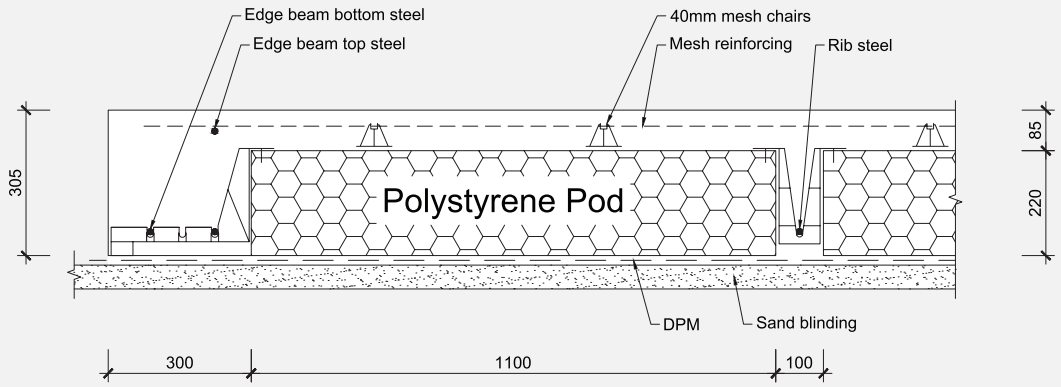

3.12 Removal of Formwork

The formwork shall not be removed prior to 12 hours after the slab has been finished. No installation loads are to be placed on the system before adequate curing has taken place.

3.13 Masonry Veneer

Where the building is to be clad with masonry veneer, the rebate in the edge beam shall be waterproofed with a bituminous sealer due to the possibility of ponding of water. Firth recommends a Flintcote® or equivalent coating on both the vertical and horizontal faces of the rebate.

3.14 Landscaping/Paving

Landscaping and/or paving adjacent to the slab shall be kept as a minimum the specified distance below finished floor level as required by NZS 3604:2011. The landscaping shall allow for large trees to be kept sufficiently away from the edge of the slab.This is to prevent the tree roots from disturbing the soil moisture conditions under the slab. As a guide, trees should be as far away from the edge of the slab as they are tall when fully grown.

3.15 Ongoing Maintenance

The building owner shall ensure that the ground surrounding the system be maintained so that the integrity of the system is not jeopardised. In other words, at no time shall the ground immediately adjacent to the system be allowed to settle away to expose the underside of the slab.

KDC - Approved Building Consent Document - BC210208 - Pg 127 of 197 - 2/07/2021 - ComplyNZ

4.0 SHEAR KEYS

Shear keys, if required, shall be provided to conform to the requirements of Section 1 of this Manual. Holes for the shear keys shall be drilled at least 1000mm deep. Into the bottom of each hole a RibRaft® Shear Key Support shall be placed. Every precaution shall be taken to ensure that the shear key support is laid level and at the base of the hole. The minimum depth of concrete placed on the support shall be 900mm. Refer to Figure 11 for construction details.

The connection steel (2HD12 Grade 500E) shall be secured in place and held during pouring to ensure the bars are correctly located. The concrete for the shear keys can be placed separately to the rest of the floor and shall be finished level to the top of the sand blinding layer, or poured in one pour with the RibRaft® floor. If poured separately the top surface of the shear key shall be finished rough to ensure a good join to the Firth Raftmix concrete in the system and the DPM shall be neatly cut around the shear keys.

KDC - Approved Building Consent Document - BC210208 - Pg 128 of 197 - 2/07/2021 - ComplyNZ

Figure 11 Shear Pile Construction Detail

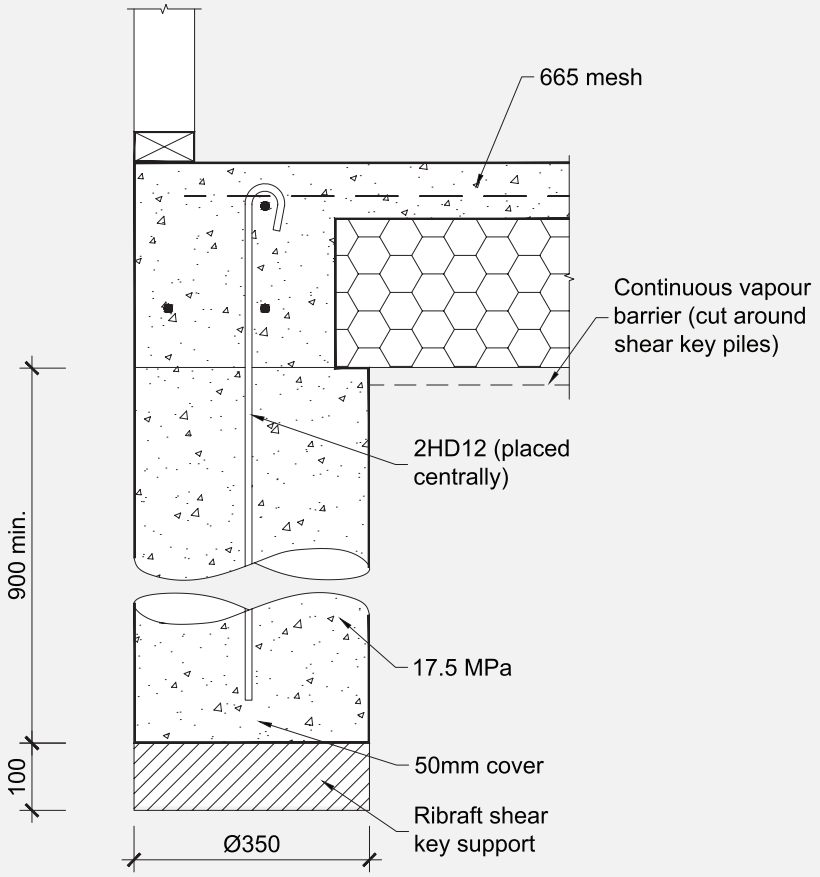

SECTION: VERIFICATION

3

KDC - Approved Building Consent Document - BC210208 - Pg 129 of 197 - 2/07/2021 - ComplyNZ

1.0 DESIGN

Verification that the design complies with the structural limitation outlined in this Manual is the responsibility of the designer, and shall be confirmed by the Building Control Authority issuing the Building Consent. Solutions outside the limitations outlined in this Manual will require specific engineering design.

2.0 CONSTRUCTION

The RibRaft® foundation system has been designed to accommodate structures complying with the non specific design standards NZS3604 or NZS4229. With these types of structures the Building Control Authority specifies the inspections required and often conducts these. A similar construction verification process shall be applied to the RibRaft® system.

To assist inspection the following check list has been prepared for structures complying with the limitation:

PRE-POUR INSPECTION CHECK LIST

- GOOD GROUND CONFIRMED AS PER NZS3604, CLAUSE 3.1.3. OR SCALA OR SHEAR VANES TESTS CONFIRM ADEQUATE BEARING CAPACITY.
- VEGETATION, TOPSOIL, ORGANIC OR DELETERIOUS MATERIAL REMOVED.
- PROXIMITY TO SLOPE-GROUND SURFACE IS ALWAYS ABOVE DASH LINE SHOWN IN FIGURE 1.
- SHEAR PILES (WHERE REQUIRED) IN PLACE AND REINFORCEMENT PROTRUDING.
- FORMATION AREA EXTENDS AT LEAST THE DEPTH OF GRANULAR FILL BEYOND BUILDING FOOTPRINT.
- STEPS IN THE FORMATION ARE DETAILED IN ACCORDANCE WITH THIS MANUAL.

Figure 1
Relationship of RibRaft® To Sloping Ground Surface

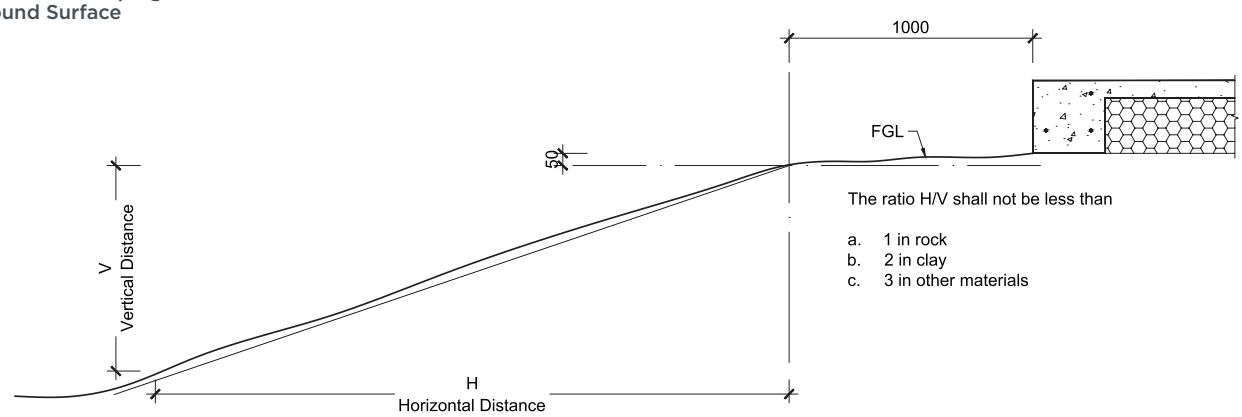

CODEMARK
CM70056

KDC - Approved Building Consent Document - BC210208 - Pg 130 of 197 - 2/07/2021 - ComplyNZ

PRE-LAYOUT INSPECTION CHECK LIST: DAMP PROOF MEMBRANE IN PLACE

PERIMETER FOUNDATION	○ WIDTH 300MM(1) ○ REINFORCEMENT 2 X HD12 BOTTOM, 1 X HD12 TOP ○ FIRTH SUPPLIED SPACER USED AT 1.2M MAXIMUM CENTRES
INTERNAL RIBS	○ WIDTH 100MM ○ REINFORCEMENT 1 X HD12 ○ FIRTH SUPPLIED SPACER, MAX SPACING OF ONE PER POD OR PART POD
LOAD BEARING RIBS	○ WIDTH 300MM ○ REINFORCEMENT 2 X HD12 BOTTOM ○ FIRTH SUPPLIED SPACER, MAX SPACING OF ONE PER POD OR PART POD
PODS	○ FIRTH SUPPLIED RIBRAFT® POD
MESH	○ 40MM CHAIRS, 1.2M MAX CENTRES, MIN TWO PER POD OR ONE PER PART POD ○ MESH IN PLACE AND 665 OR SE62 ○ MESH LAPS OVERLAP OF OUTERMOST CROSSWIRE = MESH SPACING + 50MM
REINFORCEMENT	○ 2 X HD12 BARS 1.2M LONG PROVIDED AT RE-ENTRANT CORNERS ○ LAPS FOR 12MM REINFORCEMENT MINIMUM OF 720MM
CONCRETE	○ COVER TO PODS MINIMUM OF 85MM OR 110MM IF INFLOOR HEATING USED. ○ FIRTH RAFTMIX ORDERED
SERVICE PENETRATIONS	○ NO REINFORCEMENT (WITH EXCEPTION OF MESH) CUT TO ALLOW PASSAGE OF SERVICE PIPES. REFER CLAUSE 6.3 OF SECTION 1 FOR EXCEPTIONS ○ PIPES WRAPPED WITH MINIMUM 6MM THICKNESS OF IMPERMEABLE COMPRESSIBLE MATERIAL WHERE IN CONTACT WITH CONCRETE ○ DIAMETER/SIZE OF PENETRATIONS AS PER TABLE 6, SECTION 1 OF THIS MANUAL

(1) At locations of service penetrations the width of the perimeter foundation maybe locally increased. Refer Figure 14 Section 1 for details.

KDC - Approved Building Consent Document - BC2 10208 - Pg 131 of 197 - 12/07/2021 - ComplyNZ

CONCRETE & MASONRY PRODUCTS: A SUSTAINABLE BUILDING OPTION & SOLUTION

- Environmentally compliant manufacturing plants
- Surplus water and some aggregates recycled
- Low transport impacts
- Leftover concrete returned from construction sites
- Passive solar heated thermal mass makes completed buildings more energy-efficient
- Most wash water returned from construction sites
- Highly durable, low maintenance buildings and no rot
- High degree of noise control
- Inherent fire resistance
- Overall longer effective building life
- Demolished concrete can be recycled as hard fill or aggregate

© Firth Industries 2020. All rights reserved. Content in this document is protected under the Copyright Act 1994. No material may be reproduced in whole or in part without the written consent of the copyright holder.

0800 FIRTH 1 (347841)
FIRTH.CO.NZ

Linea™ WEATHERBOARD

jameshardie.co.nz

KDC - Approved Building Consent Document - BC210208 - Pg 132 of 197 - 2/07/2021 - ComplyNZ

Cavity Fix

Technical Specification

May 2020 New Zealand

KDC - Approved Building Consent Document - BC210208 - Pg 133 of 197 - 2/07/2021 - ComplyNZ

Linea™ WEATHERBOARD | JH™

We value your feedback!

To continue with the development of our products and systems, we value your input. Please send any suggestions, including your name, contact details, and relevant sketches to:

Ask James Hardie™
literaturefeedback@jameshardie.co.nz

Make sure your information is up to date

When specifying or installing James Hardie products, ensure that you have the current manual. Additional installation information, warranties and warnings are available at **www.jameshardie.co.nz** or **Ask James Hardie™ on 0800 808 868.**

KDC - Approved Building Consent Document - BC210208 - Pg 134 of 197 - 2/07/2021 - ComplyNZ

Contents

1 Product Overview 4

1.1 Product Information 4
1.2 Manufacturing and Classification 5
1.3 Components and Accessories 5

2 Application and Scope 9

2.1 Application 9
2.2 Scope 9
2.3 Limitations 9
2.4 Details 9

3 Compliance 10

3.1 NZBC Compliance 10

4 Design 10

4.1 Responsibility 10
4.2 Clearances 11
4.3 Structure 11
4.3.1 Timber Framing 11
4.3.2 Durability 11
4.4 Structural Bracing 11
4.5 Energy Efficiency 11
4.6 Fire Rated Walls 11
4.7 Control of External Fire Spread 12
4.8 Alpine regions 12

5 Safe Working Practices 13

5.1 Storage and delivery 15
5.2 Tips for safe and easy handling of weatherboard products 16

6 Installation 16

6.1 Fastener 16
6.1.1 Fastener – Size and Method 16
6.1.2 Gun Nailing 17
6.1.3 Fastener Durability 17
6.2 Framing 18
6.2.1 Specific Engineering Design (SED) 18
6.2.2 Gable Ends 18
6.2.3 Tolerances 19
6.3 Flexible Underlay or HomeRAB Pre-Cladding 19
6.4 Intermediate Support 19
6.5 Rigid Air Barrier 19
6.6 Vent Strip 19
6.7 Cavity Battens 19
6.8 Joints 20
6.8.1 Jointing 20
6.8.2 Drainage Joint 20
6.8.3 External Corner Joint 20
6.8.4 Internal Corner Joint 20
6.9 Junctions and Penetrations 20

7 Finishes 21

7.1 Preparation and Priming 21
7.2 Sealants 21
7.3 Painting 21

8 Care and Maintenance 22

9 Details Section Index 23

Product Warranty 51

KDC - Approved Building Consent Document - BC210208 - Pg 135 of 197 - 2/07/2021 - ComplyNZ

1 Product Overview

1.1 Product Information

Linea™ Weatherboard is an external cladding.

Linea Weatherboard is a 16mm thick, pre-primed bevel back fibre cement weatherboard. The bottom front edge of Linea Weatherboard is chamfered. It has tongue and groove ends for jointing and is classified as lightweight wall cladding for use in residential and light commercial buildings using timber or lightweight steel framed external walls. Linea Weatherboard is available in 135mm, 150mm and 180mm widths.

James Hardie also has available:

- Axent™ Fascia is a 16mm thick, pre-primed fibre cement product available in two widths. It's designed to accommodate James Hardie soffit linings.
- Axent™ Trim is a 16mm thick, pre-primed fibre cement product available in two widths. For use as decorative trims around openings and external corners.

For fixing to a steel frame. Ask James Hardie™ on 0800 808 868 for specific requirements. Or refer to the James Hardie cladding to steel framing technical supplement about the installation of Linea Weatherboard to steel frame.

Table 1

Linea Weatherboard and Axent Trim sizes									
							Coverage Information		
Product	Code	Length (mm)	Width (mm)	Thickness (mm)	End details	Effective cover (mm)	No. of planks/ metre height (approx.)	Mass kg/lineal m (approx. at EMC)	Mass kg/m2 (approx. at EMC)
Linea Weatherboard 135	401844	4200	135	16	T & G	105	9.5	2.62	25.70
Linea Weatherboard 150	402533	4200	150	16	T & G	120	8.3	3.1	24.93
Linea Weatherboard 180	401847	4200	180	16	T & G	150	6.7	3.57	23.92
Axent Trim 84mm	401943	2600	84	16	Square	N/A	N/A	1.6	N/A
Axent Trim 100mm	401930	2600	100	16	Square	N/A	N/A	1.9	N/A

The effective thickness of finished Linea Weatherboard on the wall at the lap is approximately 33 to 35mm

All dimensions and masses provided are approximate only and are subject to manufacturing tolerances.

Linea Weatherboard is categorised as a Light Weight Wall Cladding as described in the NZS 3604.

KDC - Approved Building Consent Document - BC210208 - Pg 136 of 197 - 2/07/2021 - ComplyNZ

1.2 Manufacturing and Classification

The manufacturing process of Linea Weatherboard by James Hardie is ISO 9001 Certified.

Linea Weatherboard is an advanced lightweight cement composite cladding manufactured using a basic composition of Portland cement, ground sand, cellulose fibre and water. The product is easily identified by the name 'Linea' printed on the back.

Axent Trim is an advanced lightweight cement composite cladding manufactured using a basic composition of Portland cement, ground sand, cellulose fibre and water. The product is easily identified by the name 'Axent' printed on the back. The trims are factory sealed and primed.

Linea Weatherboard and Axent Trim products are manufactured to Australian/New Zealand Standard AS/NZS 2908.2 'Cellulose-Cement Products' (ISO 8336 'Fibre-Cement Flat Sheet').

Linea Weatherboard is classified Type A, Category 2 in accordance with AS/NZS 2908.2 "Cellulose-Cement Products".

For Safety Data Sheets (SDS) visit **www.jameshardie.co.nz** and view them in the technical literature section or Ask James Hardie on **0800 808 868**.

1.3 Components and Accessories

Table 2

Accessories/tools supplied by James Hardie			
Accessories	**Description**	**Size (mm)**	**Code**
	External corner soaker 90º for Linea Weatherboards 180mm • Aluminium • Copper • Stainless Steel	200 long	 **301186** **301188** **301197**
	External corner soaker 135º for Linea Weatherboards 180mm • Aluminium	200 long	 **301178**
	External corner soaker 90º for Linea Weatherboards 150mm • Aluminium • Stainless Steel	170 long	 **302820** **302821**
	External corner soaker 90º for Linea Weatherboards 135mm • Aluminium • Stainless Steel	155 long	 **301185** **301196**
	External Slimline Box Corner Mould Etched primed aluminium extrusion used to create external corner	2700 long 4000 long	**301195** **305809**
	Linea 35mm Cavity Closer	3000 long	**306035**
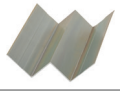	**Internal 'W' Mould 90º** Etched primed aluminium extrustion used to create 900 internal corner	2700 long 4000 long	**301184** **305807**
	Internal 'W' Mould 135º Etched primed aluminium extrustion used to create 135º internal corner	2700 long	**301183**

KDC - Approved Building Consent Document - BC210208 - Pg 137 of 197 - 2/07/2021 - ComplyNZ

Table 2 contd.

Accessories/tools supplied by James Hardie			
Accessories	**Description**	**Size (mm)**	**Code**
	JH Corner Under Flashing 50 x 50mm PVC moulding used as under fashing for internal and external corners	3000 long	**303745**
	Axent Trim 84mm	84 x 2600 long	**401943**
	Axent Trim 100mm	100 x 2600 long	**401930**
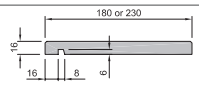	**Axent Fascia** - 180mm - 230mm	4200 long	**401843** **402230**
	HardieFlex™ Galvanised nail - 5kg	60 x 3.15mm	**302784**
	HardieFlex™ Stainless steel nail - 5kg	60 x 3.15mm	**302782**
	HardieBlade™ Saw Blade Diamond tip fibre cement circular saw blade. Spacers not included	4 tooth - 184mm	**300660**
	HardieBlade™ Saw Blade Diamond tip fibre cement circular saw blade. Spacers not included	6 tooth - 254mm	**303375**
	Gecko Gauge This easy to use tool gauges and supports the weatherboard for a one person install.		**305941**

KDC - Approved Building Consent Document - BC210208 - Pg 138 of 197 - 2/07/2021 - ComplyNZ

Table 3

Accessories not supplied by James Hardie

James Hardie recommends the following products for use in conjunction with its Linea Weatherboard and Axent Trim. James Hardie does not supply these products. There may also be some other accessories required depending upon the application. Please contact component manufacturer for information on their warranties and further information on their products.

Accessories	Description	Size (mm)	Material/ appearance
	Flexible Underlay To comply with Table 23 of E2/AS1		
	D head or RounDrive Nail Gun nail for concealed fixing Linea Weatherboard.	60 x 2.87	Hot Dip Galvanised/ Stainless Steel
	HardieFlex™ Hot Dip Galv. Nails For concealed fixing by hand nail	60 x 3.15mm 75 x 3.15mm	Hot Dip Galvanised/ Stainless Steel
	Jolt Head Nail for face fixing Linea Weatherboard	75 x 3.15mm 90 x 3.55mm	Hot Dip Galvanised/ Stainless Steel
	Titanium Coated High Speed Drill Bit. For pre-drilling prior to face fixing with jolt head.	3.0mm 3.5mm	
	Brad Nail To tie boards together	32mm	
	Joint sealant Paintable flexible sealants are recommended for filling the joints. Refer to Section 7.2 for information.	Tube	Sika, Bostik or similar Holdfast
	CRC ADOS Builders Fill Two part exterior grade fill to finish over jolt head nails.		
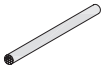	**PEF Rod**	Polyethylene foam	Sika or similar
	Flexible tape A flexible self-adhesive tape used in preparation of a window. Refer to the Window installation section in this manual for more information.	Proprietary tape to adhere to flexible underlay	Tyvek, Marshall Innovations or similar
	Flashing Material as per Table 20, 'E2/AS1'		Flashing Fabricator
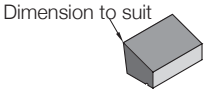	**Planted Sill**		H3.1 minimum Treated Timber Timber Merchant or cut on site

KDC - Approved Building Consent Document - BC210208 - Pg 139 of 197 - 2/07/2021 - ComplyNZ

Table 3 contd.

Accessories not supplied by James Hardie			
Accessories	**Description**	**Size (mm)**	**Material/ appearance**
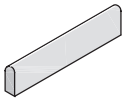	**Timber Scriber** To scribe beside window, site cut to suit.	As required	H3.1 minimum Treated Timber Timber Merchant or cut on site
	Fibre Cement Cutting Blade Diamond tip 305mm diameter circular saw blade to fit drop saw.	305mm	Diamond Tipped
	Cavity Closer - aluminium Used in walls taller than 10m for inter-tenancy fire separation.		
	Primers. Dulux 1-Step Prep, Resene Quick Dry etc.		

KDC - Approved Building Consent Document - BC210208 - Pg 140 of 197 - 2/07/2021 - ComplyNZ

2 Application and Scope

2.1 Application

This specification includes the installation of Linea Weatherboard cavity construction where risk matrix is 13 or more and must be read in conjunction with the current CodeMark Certificate and BRANZ Appraisal. This installation method can also be used for buildings where the risk matrix score is 0 - 12 if desired.

This document is intended for use by architects, designers, specifiers or builders who are involved in specifying Linea Weatherboard. The document also serves the purpose of an installation manual for this product.

For use of Linea Weatherboard outside this published scope, the architect, designer or engineer must undertake specific design. For advice on designs outside the scope of this specification, Ask James Hardie on 0800 808 868.

Refer to the Linea Weatherboard Direct Fixed Technical Specification when installing Linea Weatherboard without a cavity.

2.2 Scope

Linea Weatherboard cavity construction is suitable for use in timber framed buildings that fall within the scope limitations of the New Zealand Building Code (NZBC) Acceptable Solution E2/AS1, Paragraph 1.1.

Linea Weatherboard cavity construction is also suitable for use in specific engineering design projects (SED) subject to a wind pressure of 2.5kPa (ULS) maximum for building heights upto 25m.

2.3 Limitations

- Linea Weatherboard cladding must not be used on curved wall applications
- Linea Weatherboard cladding must not be installed vertically or angled
- The minimum ground clearances specified must be maintained
- Timber window joinery/recessed openings is subject to an alternative design by the designer
- Maximum SLS inter-story seismic deflections up to span/180 when used in specific design buildings (SED) buildings above 10m height. To accommodate higher inter-story drifts, a deflection should be used.

2.4 Details

Various typical Linea Weatherboard details are provided within this document. In addition to these, the construction details with HomeRAB™ Pre-Cladding/RAB™ Board have also been developed and are available on our website. These details are available in dwg, dxf, jpg and pdf file format and can be downloaded at **www.jameshardie.co.nz.**

All dimensions shown are in millimetres unless noted otherwise.

KDC - Approved Building Consent Document - BC210208 - Pg 141 of 197 - 2/07/2021 - ComplyNZ

3 Compliance

3.1 NZBC Compliance

When installed in accordance with the conditions of CodeMark number GM-CM30018 Linea Weatherboard complies with all relevant requirements of the NZBC.

CODEMARK™
30018

Please refer to www.building.govt.nz for a copy of the certificate.

Linea Weatherboard cavity fixed cladding also has a BRANZ Appraisal number 447 (2010) available at www.branz.co.nz or www.jameshardie.co.nz.

BRANZ Appraised
Appraisal No.447 [2010]

4 Design

4.1 Responsibility

The specifier or other party responsible for the project must ensure that the information and details in this specification are appropriate for the intended application and that additional detailing is performed for specific design or any areas that fall outside the scope of this technical specification.

All New Zealand Standards referenced in this manual are current edition and must be complied with.

Specifier

If you are a specifier or other responsible party for a project ensure that the information in this document is appropriate for the application you are planning and that you undertake specific design and detailing for areas which fall outside the scope of these specifications.

Installer

If you are an installer ensure that you follow the design, moisture management principles, associated figures and material selection provided by the designer and this James Hardie Technical Specification. All the details provided in this document must be read in conjunction with the project specification.

James Hardie conducts stringent quality checks to ensure that any product manufactured falls within our quality spectrum. It is the responsibility of the builder to ensure that the product meets their aesthetic expectations before installation. James Hardie will not be responsible for rectifying obvious aesthetic surface variations following installation. James Hardie will only offer a replacement product if Linea Weatherboard or Axent Trim supplied are found to be out of its manufacturing specification.

KDC - Approved Building Consent Document - BC210208 - Pg 142 of 197 - 2/07/2021 - ComplyNZ

4.2 Clearances

The clearance between the bottom edge of cladding and the paved/unpaved ground must comply with section 9.1.3 of E2/AS1. On the roofs and decks the minimum clearance must be 50mm. These clearances must be maintained throughout the life of the building.

Linea Weatherboard must overhang the bottom plate on a concrete slab by a minimum of 50mm as required by the NZBC Acceptable Solution, E2/AS1 Table 18.

The site on which the building is situated must comply with the NZBC Acceptable Solution E1/AS1 ‘Surface Water’.

Do not install cladding such that it may remain in contact with water or ground, refer to figures in section 9 of this manual.

4.3 Structure

4.3.1 Timber Framing

Timber framing must be in accordance with NZS 3604 (Timber-framed buildings) or designed as for specific engineering design (SED) in accordance with NZS 3603 and AS/NZS 1170 where specific engineering design is required, the framing stiffness must be equivalent to or more than the framing provisions of NZS 3604.

The stud spacing must not exceed 600mm centres maximum for buildings within the scope of NZS 3604 and 400mm centres maximum for wind pressures more than 1.5kPa (ULS).

For timber frame walls longer than 12m, it is best practice to allow for construction joints to accommodate movements generated due to timber shrinkage or deflections.

4.3.2 Durability

Timber framing must be treated to a minimum H1.2 treatment requirements and comply with Acceptable Solution B2/AS1 ‘Durability’ of the NZBC. For further timber treatment information refer to the NZS 3602 (Timber and Wood-Based Products for use in Buildings) for minimum timber treatment selection and treatment requirements. Framing must be protected from moisture at sites in accordance with the recommendations of framing manufacturers. Refer to the NZS 3602 for information about the allowable moisture content in timber framing.

4.4 Structural Bracing

Bracing can be achieved by using HomeRAB Pre-Cladding or RAB Board installed direct to framing instead of a flexible underlay or by using Villaboard™ Lining bracing system on the internal face.

4.5 Energy Efficiency

External walls constructed as per this technical specification, using Linea Weatherboard cladding must use suitable bulk insulation to meet the minimum thermal insulation requirements as per Clause H1/AS1 'Energy Efficiency' of the NZBC.

4.6 Fire Rated Walls

External walls with Linea Weatherboard cavity fix construction method can achieve fire ratings up to 60/60/60 when constructed in accordance with the James Hardie Fire and Acoustic Design Manual. Linea Weatherboard must be face fixed for fire rated applications.

Refer to the Fire and Acoustic Design Manual for further information about fire rated systems.

KDC - Approved Building Consent Document - BC210208 - Pg 143 of 197 - 2/07/2021 - ComplyNZ

4.7 Control of External Fire Spread

External spread of fire (clause C3.5 and C3.7) apply where:

- Building height is greater than 10m and upper floors have sleeping uses or are different property (C3.5), and
- Where the building is located within 1m of a relevant boundary (C3.7)

Refer to Table 5.1 of Section 5.4 of C/AS1 for group SH or table 5.5 of Section 5.8.1 of C/AS2 for the other risk groups to identify the external fire spread requirement applicable to the external cladding material and surface finish.

For the other situations where 'no requirement' is listed, Linea Weatherboard installed as per the details published in this specification complies.

For buildings that are >10m high and contain tenancies above as per Table 5.5. of C/AS2, Linea Weatherboard installed over timber cavity battens in conjunction with RAB Board with R2.2 fibreglass/James Hardie mineral insulation complies. Refer to Figure 38 and 39 for RAB Board and cavity batten layout. For the complete set of suitable Linea Weatherboard cavity construction details with RAB Board for this application, refer to www. jameshardie.co.nz.

4.8 Alpine regions

In regions subject to freeze/thaw conditions, Linea Weatherboard must not be in direct contact with snow or ice build up for extended periods, e.g. external walls in alpine regions subject to snow drifts over winter.

The Linea Weatherboard has been tested in accordance with AS/NZS 2908.2 Clause 8.2.3.

KDC - Approved Building Consent Document - BC210208 - Pg 144 of 197 - 2/07/2021 - ComplyNZ

5 Safe Working Practices

WARNING - DO NOT BREATHE DUST AND CUT ONLY IN WELL VENTILATED AREA

James Hardie products contain sand, a source of respirable crystalline silica may cause cancer if dust from product is inhaled. Causes damage to lungs and respiratory system through prolonged or repeated inhalation of dust from product.

Intact fibre cement products are not expected to result in any adverse toxic effects. The hazard associated with fibre cement arises from the respirable crystalline silica present in dust generated by activities such as cutting, rebating, drilling, routing, sawing, crushing, or otherwise abrading fibre cement, and when cleaning up, disposing of or moving dust.

When doing any of these activities in a manner that generates dust, follow James Hardie instructions and best practices to reduce or limit the release of dust.

If using a dust mask or respirator, use an AS/NZS1716 P1 filter and refer to Australian/New Zealand Standard 1715:2009 Selection, Use and Maintenance of Respiratory Protective Equipment for more extensive guidance and more options for selecting respirators for workplaces. For further information, refer to our installation instructions and Safety Data Sheets available at www.jameshardie.co.nz.

FAILURE TO ADHERE TO OUR WARNINGS, SAFETY DATA SHEETS, AND INSTALLATION INSTRUCTIONS MAY LEAD TO SERIOUS PERSONAL INJURY OR DEATH.

Crystalline Silica is

- Commonly known as sand or quartz
- Found in many building products e.g. concrete, bricks, grout, wallboard, ceramic tiles, and all fibre cement materials

Why is Crystalline Silica a health hazard?

- Silica can be breathed deep into the lungs when present in the air as a very fine (respirable) dust
- Exposure to silica dust without taking the appropriate safety measures to minimise the amount being breathed in, can lead to a potentially fatal lung disease – silicosis – and has also been linked with other diseases including cancer. Some studies suggest that smoking may increase these risks
- The most hazardous dust is the dust you cannot see!

When is Crystalline Silica a health hazard?

- It's dangerous to health if safety protocols to control dust are not followed when cutting, drilling or rebating a product containing crystalline silica and when cleaning up
- Products containing silica are harmless if intact (e.g. an un-cut sheet of wall board)

Avoid breathing in crystalline silica dust

Safe working practices

✕ NEVER use a power saw indoors or in a poorly ventilated area

✕ NEVER dry sweep

✓ ALWAYS use M Class or higher vacuum or damp down dust before sweeping up

✕ NEVER use grinders

✓ ALWAYS use a dust reducing circular saw equipped with a sawblade specifically designed to minimise dust creation when cutting fibre cement – preferably a sawblade that carries the HardieBlade™ logo or one with at least equivalent

KDC - Approved Building Consent Document - BC210208 - Pg 145 of 197 - 2/07/2021 - ComplyNZ

performance – connected to an M Class or higher vacuum

- ✓ Before cutting warn others in the area to avoid dust
- ✓ ALWAYS follow tool manufacturers' safety recommendations
- ✓ ALWAYS expose only the minimum required depth of blade for the thickness of fibre cement to be cut
- ✓ ALWAYS wear a properly-fitted, approved dust mask or respirator P1 or higher in accordance with applicable government regulations and manufacturer instructions
- ✓ Consider rotating personnel across cutting tasks to further limit respirable silica exposures.

When cutting

- ✓ Work outdoors only
- ✓ Make sure you work in a well ventilated area
- ✓ Position cutting station so wind will blow dust away from yourself and others in the working area
- ✓ Rotate employees across cutting task over duration of shift
- ✓ Cut products with a HardieBlade Saw Blade (or equivalent) and a dust reducing circular saw connected to a M Class or higher vacuum
- ✓ When sawing, sanding, rebating, drilling or machining fibre cement products, always:
  - Wear your P1 or higher (correctly fitted in accordance with manufacturers' instructions), ask others to do the same.
  - Keep persons on site at least 2 metres and as far as practicable away from the cutting station while the saw is in operation
  - If you are not clean shaven, then use a powered air respirator with a loose fitting head top
  - Wear safety glasses
  - Wear hearing protection
- ✓ Make sure you clean up BUT never dry sweep. Always hose down with water/wet wipe or use an M Class or higher vacuum

If concern still exists about exposure levels or you do not comply with the above practices, you should always consult a qualified industrial hygienist or contact James Hardie for further information.

KDC - Approved Building Consent Document - BC210208 - Pg 146 of 197 - 2/07/2021 - ComplyNZ

Working Instructions

HardieBlade™ Saw Blade

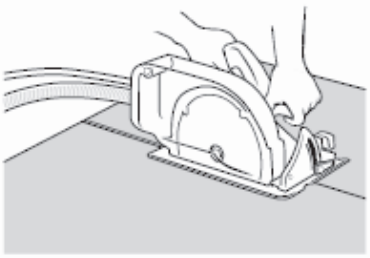

The HardieBlade Saw Blade used with a dust-reducing saw is ideal for fast, clean cutting of James Hardie fibre cement products. A dust-reducing saw uses a dust collector connected to a M Class or higher vacuum. When sawing, clamp a straight edge to the sheet as a guide and run the saw base plate along the straight edge when making the cut.

Hole-Forming

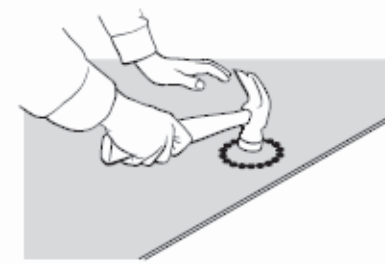

For smooth clean cut circular holes:

- Mark the centre of the hole on the sheet
- Pre-drill a 'pilot' hole
- Using the pilot hole as a guide, cut the hole to the appropriate diameter with a hole saw fitted to a heavy duty electric drill

For irregular holes:

- Small rectangular or circular holes can be cut by drilling a series of small holes around the perimeter of the hole then tapping out the waste piece from the sheet face
- Tap carefully to avoid damage to sheets, ensuring that the sheet edges are properly supported

5.1 Storage and delivery

Keeping products and people safe

Off loading

✓ James Hardie products should be off-loaded carefully by hand or by forklift

✓ James Hardie products should not be rolled or dumped off a truck during the delivery to the jobsite

Storage

James Hardie products should be stored:

✓ In their original packaging

✓ Under cover where possible or otherwise protected with a waterproof covering to keep products dry

✓ Off the ground – either on a pallet or adequately supported on timber or other spacers

✓ Flat so as to minimise bending

James Hardie products must not be stored:

✕ Directly on the ground

✕ In the open air exposed to the elements

James Hardie is not responsible for damage due to improper storage and handling.

KDC - Approved Building Consent Document - BC210208 - Pg 147 of 197 - 2/07/2021 - ComplyNZ

5.2 Tips for safe and easy handling of weatherboard products

Weatherboard products

✕ Do not lift planked products flat and in the middle

✓ Carry the products on the edge

✓ If only one person is carrying the product, hold it in the middle and spread arms apart to better support the product

✓ If two people are carrying the plank, hold it near each end and on edge

✓ Exercise care when handling weatherboard products to avoid damaging the edges/corners

6 Installation

The horizontal lap between the two Linea Weatherboard must be 30mm minimum. In certain scenarios you may require to creep up the lap, this must not exceed 33mm.

Linea Weatherboard must be kept dry whilst in storage prior to and during fixing. Site cut ends that are exposed such as slimline box corners, internal corners etc. and any sanded patches on the boards surface must be primed prior to installation. Dust and loose material must be removed before priming.

6.1 Fastener

6.1.1 Fastener – Size and Method

Linea Weatherboard and Axent Trim must be fixed to timber with the types of nails specified in Tables 4 and 5, in accordance with the following requirements:

- Linea Weatherboard can either be face/exposed fixed or concealed fixed
- Linea Weatherboard must be fixed into studs at maximum 600mm centres. Fixing centres to coincide with stud spacing, refer to figures in section 9 of this manual
- All concealed nails must be driven flush with the board surface
- When concealed fixing Linea Weatherboard, nails must be driven under the lap of boards, except at all corners and vertical edges of openings where Linea Weatherboard must be face fixed, refer to figures in section 9 of this manual
- Nails must be fixed 25mm from the end of the board when hand nailing. For gun nailing refer to Section 6.1.2
- When using concealed fixing method, any gaps that may appear under the lap due to site conditions can be minimised by fixing a jolt head nail through the lap as per the exposed nailing method. Refer to figures in section 9 of this manual
- When using concealed fixing method, Linea Weatherboard may be tied together by face fixing through the lap using a 32mm brad nail if desired.
- When face fixing Linea Weatherboard, the upper board must be pre-drilled before fixing with a jolt head nail

KDC - Approved Building Consent Document - BC210208 - Pg 148 of 197 - 2/07/2021 - ComplyNZ

Table 4

Wind pressure (kPa)	Underlay	Fixing method	Fixing type	Instructions
Up to 1.5 (up to and including VH Wind Zone)	Flexible underlay	Concealed nailing	60 x 3.15mm HardieFlex™ nail or a 60 x 2.87mm D/round head gun nail	Finish flush with the board surface.
		Face nailing	75 x 3.15mm jolt head nails	Hot-dipped galvanised/stainless steel jolt head nail with pre-drilling through the top weatherboard. Use a 3mm drill bit.
	Rigid air barrier	Concealed nailing	75 x 3.15mm HardieFlex™ nail or a 75 x 3.06mm D/round head gun nail	Finish flush with the board surface.
		Face nailing	90 x 3.55mm jolt head nails	Hot-dipped galvanised/stainless steel jolt head nail with pre-drilling through the top weatherboard. Use a 3.5mm drill bit.
1.5 to 2.5 (EH Wind Zone and SED projects)	RAB Board	Face nailing	90 x 3.55mm jolt head nail	Hot-dipped galvanised/stainless steel jolt head nail with pre-drilling through the top weatherboard. Use a 3.5mm drill bit.

Table 5

Nail requirements for Axent Trim	
Single thickness	60mm jolt head nails. If fixing over Linea Weatherboard use 75 x 3.15mm jolt head nails through a pre-drilled hole, using a 3mm drill bit.
Single thickness plus packer	If fixing over Linea Weatherboard use 75 x 3.15mm jolt head nails through a pre-drilled hole, using a 3mm drill bit. When fixing to timber support use 60mm jolt head nails.

For fire rated wall applications the Linea Weatherboards must be face fixed. For more information Ask James Hardie on 0800 808 868.

6.1.2 Gun Nailing

Linea Weatherboard can be gun nailed with a D-Head or RounDrive nail when concealed fixing method is used.

- Nails must be no closer than 50mm from the ends of boards when gun nailing is used, double studs will be required.
- Be minimum length and nearest gauge as per Table 4.
- Be finished flush with surface of board.

6.1.3 Fastener Durability

Fasteners must meet the minimum durability requirements of the NZBC. Refer to Table 6 for fixing materials requirements to be used in relation to the exposure conditions.

KDC - Approved Building Consent Document - BC210208 - Pg 149 of 197 - 2/07/2021 - ComplyNZ

Table 6

Exposure conditions and nail selection prescribed by NZS 3604		
Zone	**Application**	
D (sea spray) and geothermal hot spots	General	Stainless steel 304/316
	Fire	
*C and B	General	Hot dip galvanised**
	Fire	

* Zone C areas where local knowledge dictates that increased durability is required, appropriate selection shall be made Microclimatic conditions as detailed in NZS 3604, Paragraph 4.2.4 require SED.

**Hot dip galvanised must comply with AS/NZS 4680.

Also refer to the NZBC Acceptable Solution E2/AS1 Table 20 and 21 for information regarding the selection of suitable fixing materials and their compatibility with other materials.

6.2 Framing

Framing to be in accordance with the NZS 3604. The following must be provided for fixing Linea Weatherboard:

- Studs at 600mm centres maximum for all wind speed zones up to and including very high (VH)
- Studs at 400mm centres maximum for wind pressures more than 1.5 kPa (ULS)
- Double studs are required at internal corners
- Extra packers may be required at external corners
- Extra studs are required for aluminium internal corner sections

6.2.1 Specific Engineering Design (SED)

For EH wind zone and specific engineering design projects the timber framing is required to be designed in accordance with NZS 3603 and AS/NZS 1170. The minimum framing sizes and layout must comply with this specification:

- Stud spacing 400mm centres maximum
- Nog spacing 1200mm centres maximum
- Double studs are required at internal corners
- Extra packers may be required at external corners
- Extra studs are required for aluminium internal corner sections

6.2.2 Gable Ends

In case of gable end trusses sitting on top plates of the external wall frame, the frame size must be in accordance with truss design and specification supplied by the frame and truss manufacturer/supplier supported by independent design producer statement.

KDC - Approved Building Consent Document - BC210208 - Pg 150 of 197 - 2/07/2021 - ComplyNZ

6.2.3 Tolerances

In order to achieve an acceptable wall finish, it is imperative that framing is straight and true. Framing tolerances must comply with the requirements of NZS 3604 and the manufacturer's specifications. All framing must be made flush. The visual aspects of the finished cladding can differ between two different sites or the builders installing the product. It is recommended that you also refer to a building guidance document published by MBIE to understand an acceptable level of tolerances allowed in building materials and workmanship. www.building.govt.nz Guide to tolerances, materials and workmanship in new residential construction 2015

6.3 Flexible Underlay or HomeRAB Pre-Cladding

Flexible underlay or HomeRAB Pre-Cladding must be provided to comply with the requirements of E2/AS1 up to and including very high wind zone.

Walls which are not lined on the inside face (e.g. garage walls or gable ends) must include a rigid sheathing or an air barrier behind the cladding. HomeRAB Pre-Cladding is suitable for use as an air barrier and must be installed in accordance with James Hardie Rigid Air Barriers Installation Manual.

6.4 Intermediate Support

Where studs are at 600mm centres an intermediate means of restraining the flexible underlay and insulation from bulging into the cavity must be installed. An acceptable method to achieve this is using one of the following:

- Intermediate cavity batten between the studs; or
- 75mm galvanised mesh; or
- Polypropylene tape at 300mm centres fixed horizontally and drawn taut.

No intermediate supports are required:

- Where studs are at maximum 400mm centres; or,
- When rigid sheathings instead of flexible underlays are used.

6.5 Rigid Air Barrier

In EH wind zone or for specific design wind zone, a rigid air barrier i.e. RAB Board, must be used instead of flexible underlay.

For buildings more than 10m, RAB Board must be used. To achieve the temporary weathertightness using James Hardie rigid air barriers, windows/doors need to be installed with required flashing tapes and seals etc. Refer to James Hardie Rigid Air Barriers Installation Manual for information regarding its installation and to achieve temporary weathertightness.

6.6 Vent Strip

Linea 35mm cavity closer vent strip (uPVC) must be installed at the bottom of all walls constructed using the drained and ventilated for cavity construction method. James Hardie Linea 35mm cavity closer vent strip has an opening area of 1000mm^2/m length. It is important that the openings in the vent strip are kept clear and unobstructed to allow free drainage and ventilation of cavities. Alternate cavity closer can be used ensuring compliance of E2 and may need to be used with a cant strip.

6.7 Cavity Battens

The cavity battens provide airspace between the frame and cladding and are considered a "packer" only in this specification.

The timber battens must be minimum H3.1 treated to comply with the durability requirements of B2/AS1.

KDC - Approved Building Consent Document - BC210208 - Pg 151 of 197 - 2/07/2021 - ComplyNZ

Cavity battens must comply with E2/AS1 and:

- Be minimum 18mm thick
- Be minimum 45mm wide
- Until claddings are fixed the battens need only to be tacked to framing with 40 x 2.8mm nails at 800mm centres maximum (batten fixing is required temporarily to keep them straight on the wall during construction)

6.8 Joints

6.8.1 Jointing

The ends of Linea Weatherboard are jointed off-stud by means of a tongue and groove joint. Tongue and groove joints may be located centrally between studs but no closer than 100mm from the edge of a stud. The joints must be staggered by 600mm minimum. Flexible sealant must be applied to the front of tongue before pushing into the groove at the time of installation. From a visual perspective, the joint line will be visible and must not be hard filled.

6.8.2 Drainage Joint

After every two floors a horizontal drainage joint flashing is required, refer to figures Figure 29 in section 9 of this manual.

6.8.3 External Corner Joint

There are a number of options to select from when detailing external corners:

- 90º corner soaker in aluminium, copper or stainless steel
- 135º corner soaker 180mm aluminium
- Aluminium boxed corners
- Box corners using Axent Trim
- Mitred corners to weatherboards

Refer to figures in section 9 of this manual.

6.8.4 Internal Corner Joint

There are a number of options to select from when detailing internal corners:

- 90º or 135º Aluminium W-mould
- Scribed corner

Refer to figures in section 9 of this manual.

6.9 Junctions and Penetrations

All windows and doors must be detailed as per the requirements of this specification. James Hardie has developed the window details for Linea Weatherboard which meet the performance requirements of E2 ‘External Moisture’, an approved document of the NZBC, refer to figures in section 9 of this manual.

KDC - Approved Building Consent Document - BC210208 - Pg 152 of 197 - 2/07/2021 - ComplyNZ

7 Finishes

Protective coating of Linea Weatherboard and Axent Trim is required in order to meet the durability requirements of the NZBC.

7.1 Preparation and Priming

The Linea Weatherboard and Axent Trim must be dry before painting. Punch and fill all exposed nails a maximum of 2mm below the surface. Fill the hole with an exterior grade 2 part builders fill, eg CRC ADOS Builders Fill, allow to cure and using 60 grit sand paper smooth ready for painting. Prime any sanded patch on board surface or the site cut edges that will be exposed.

It is not recommended to seal gap under the lap of weatherboards as it helps in circulation of air behind the weatherboard cladding. However if sealing of the gap is undertaken, the product warranty still applies.

7.2 Sealants

All sealants must demonstrate the ability to meet the relevant requirements of the NZBC. Application and use of sealants must comply with manufacturer's instructions. Sealants, if coated, must be compatible with the paint system.

7.3 Painting

All Linea Weatherboards are pre-primed on their face and bottom edge with a factory applied acrylic base coat.

Linea Weatherboard and Axent Trim must be painted within 90 days of installation. Dark coloured paints can be used, i.e. there is no restriction on the Light Reflectance Value (LRV) of paint to be applied. All exposed faces, including the top edges under the sills and bottom edges of Linea Weatherboard, Axent Trim and accessories must be finished with an exterior paint system.

For best aesthetic results a low sheen paint is recommended.

The dark colours in certain environments may fade over a period of time. Special paints/coatings are required in certain harsh environments.

Stainless steel soakers are generally left natural. For painting over stainless steel soakers, refer to paint manufacturer as special preparation and paints are required.

Paint selection and the preparation required is dependent on paint chosen. Refer to the paint manufacturer for information before starting painting.

KDC - Approved Building Consent Document - BC210208 - Pg 153 of 197 - 2/07/2021 - ComplyNZ

8 Care and Maintenance

The extent and nature of maintenance will depend on the geographical location and exposure of the building. It is the responsibility of the specifier to determine normal maintenance requirements to comply with the NZBC Acceptable Solution B2/AS1. As a guide, it is recommended that basic normal maintenance tasks shall include but not be limited to:

- Washing down exterior surfaces every 6-12 months* using low pressure water and a brush, and every 3-4 months in extreme coastal conditions or sea spray zones
- Re-coating exterior protective finishes. Always refer to your paint manufacturer for re-coating requirements
- Maintaining the exterior envelope and connections including junctions, penetrations, flashings and sealants
- Cleaning out gutters, blocked pipes and overflow pipes as required
- Pruning back vegetation close to or touching the building as well as ensuring the NZBC ground clearance requirements are maintained especially where gardens are concerned
- The clearances between the bottom edge of Linea Weatherboard and the finished/unfinished ground must always be maintained
- Stainless steel soakers used in extreme coastal conditions or in sea spray zones may show some signs of 'tea staining'. It is an aesthetic issue and to minimise staining soaker must be washed/polished frequently

*Do not use a water blaster to wash down the cladding. Refer to your paint manufacturer for washing down requirements.

KDC - Approved Building Consent Document - BC210208 - Pg 154 of 197 - 2/07/2021 - ComplyNZ

9 Details Section Index

Description	Page
Figure 1: Weatherboard fixing	25
Figure 2: Batten fixing	26
Figure 3: Batten layout at window opening	26
Figure 4: Foundation detail	27
Figure 5: Enclosed Deck	27
Figure 6: Jointing off stud	28
Figure 7: External corner soaker	28
Figure 8: Aluminium box corner	29
Figure 9: Boxed corner	29
Figure 10: Mitre corner	30
Figure 11: Internal 90 ° aluminium ‘W’ mould corner	30
Figure 12: Internal 135 ° aluminium ‘W’ mould corner	31
Figure 13: Internal corner joint flashing	31
Figure 14: Wall to soffit junction 'X'	32
Figure 15: Nil soffit detail	32
Figure 16: Sloping soffit and wall junction	33
Figure 17: Window and door sill	33
Figure 18: Window head	34
Figure 19: Window jamb	34
Figure 20: Window head stop end	35
Figure 21: Window sill with facing	36
Figure 22: Window head with facings	36
Figure 23: Window jamb with facings	37
Figure 24: Door sill support detail	37
Figure 25: Pipe penetration	38
Figure 26: Continous cladding over joist	38
Figure 27: Drained flashing joint at floor level	39
Figure 28: Timber deck junction	39
Figure 29: One piece apron flashing joint	40
Figure 30: Roof to wall junction detail	40
Figure 31: Parapet flashing	41
Figure 32: Enclosed deck balustrade to wall	41
Figure 33: Enclosed balustrade to wall	42
Figure 34: Junction Linea™ Weatherboard and fascia board	43

KDC - Approved Building Consent Document - BC210208 - Pg 155 of 197 - 2/07/2021 - ComplyNZ

Description	Page
Figure 35: Enclosed roof to wall intersection	44
Figure 36: Garage door head	45
Figure 37: Garage door jamb	45
Figure 38: Framing setout building height over 10m	46
Figure 39: Intertenancy vertical fire separation	47

For all meter box details please visit our website at **www.jameshardie.co.nz** or Ask James Hardie on **0800 808 868**.

KDC - Approved Building Consent Document - BC210208 - Pg 156 of 197 - 2/07/2021 - ComplyNZ

Figure 1: Weatherboard fixing

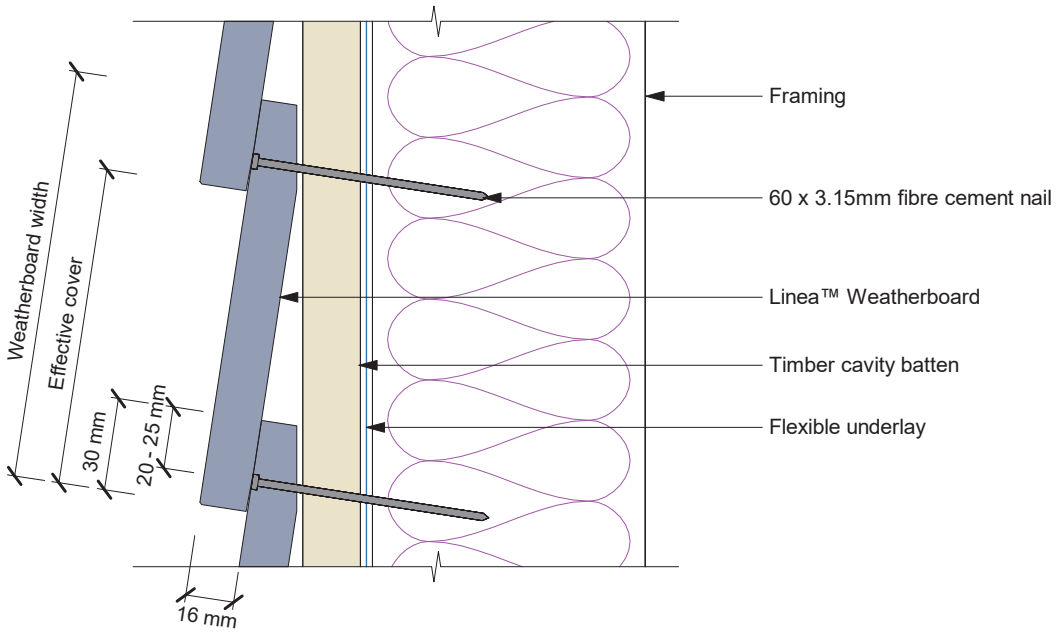

Concealed Nailing

Linea™ Weatherboards to be face fixed at corners and down window and door openings using jolt head nails at 90° to face, punch 2mm below surface and fill. Refer to fixing table 4

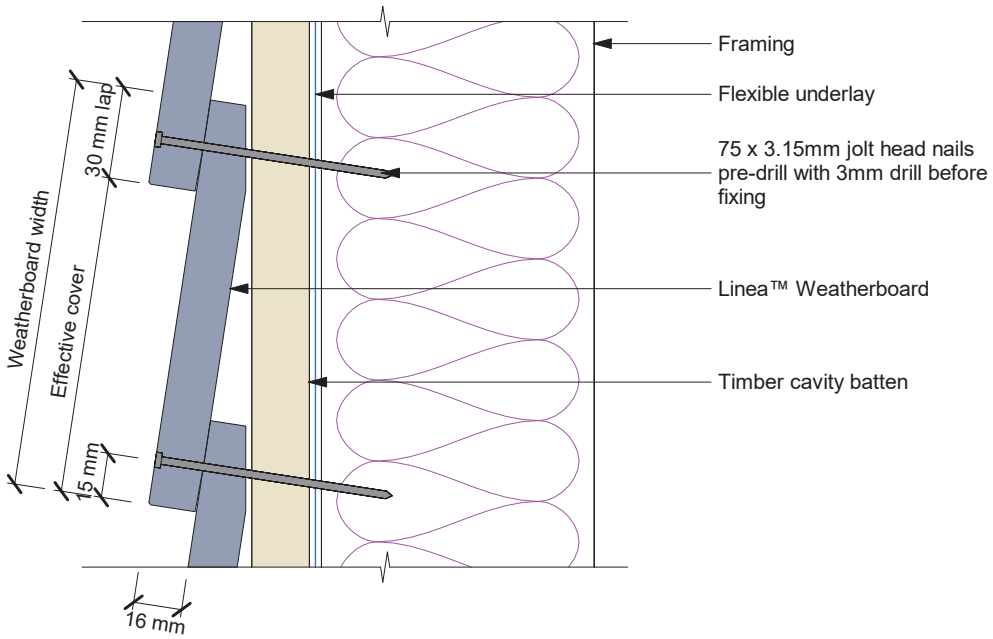

Exposed Nailing

KDC - Approved Building Consent Document - BC210208 - Pg 157 of 197 - 2/07/2021 - ComplyNZ

Figure 2: Batten fixing

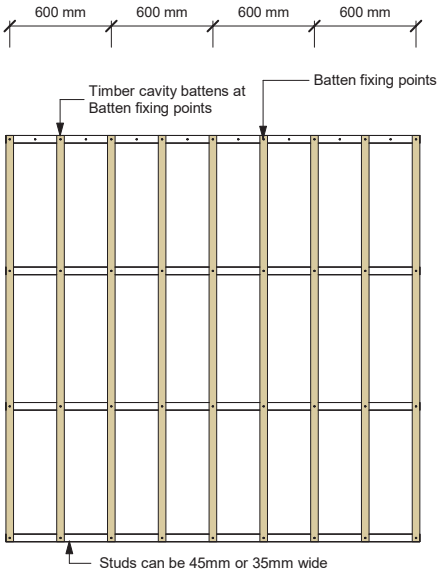

The intermediate support for insulation between the studs could be a timber cavity batten, polypropylene tape or 75 mm galvanised wire mesh. Refer to E2/AS1 Paragraph 9.1.8.5 Polypropylene tape must be fixed horizontally and drawn taut at 300 mm centres.

Figure 3: Batten layout at window opening

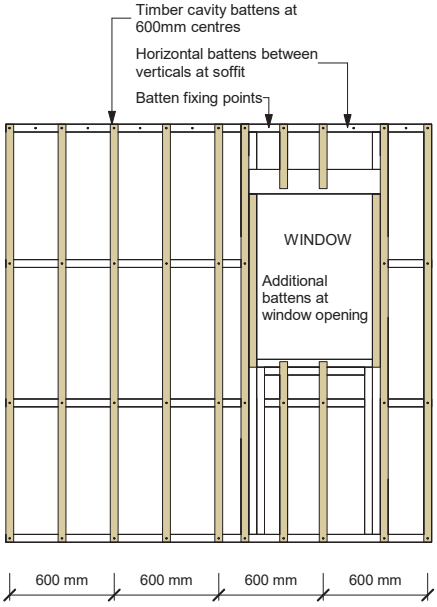

- Studs can be 45mm or 35mm wide

-The intermediate support for insulation between the studs could be a timber cavity batten, polypropylene tape or 75 mm galvanised wire mesh. Refer to E2/AS1 Paragraph 9.1.8.5 Polypropylene tape must be fixed horizontally and drawn taut at 300 mm centres.

KDC - Approved Building Consent Document - BC210208 - Pg 158 of 197 - 2/07/2021 - ComplyNZ

Figure 4: Foundation detail

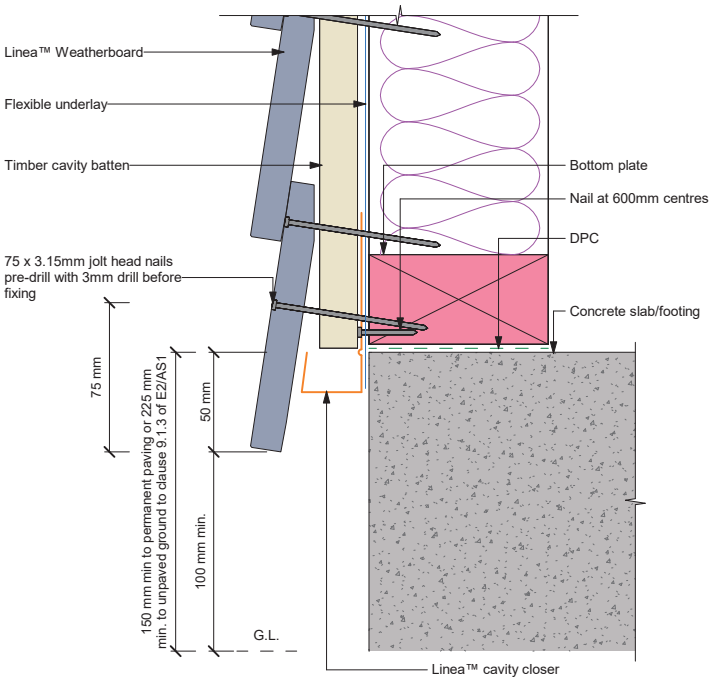

Note:
Drain holes in James Hardie uPVC vent strip are sufficient to achieve ventilation openings of 1000mm² per lineal metre

Figure 5: Enclosed Deck

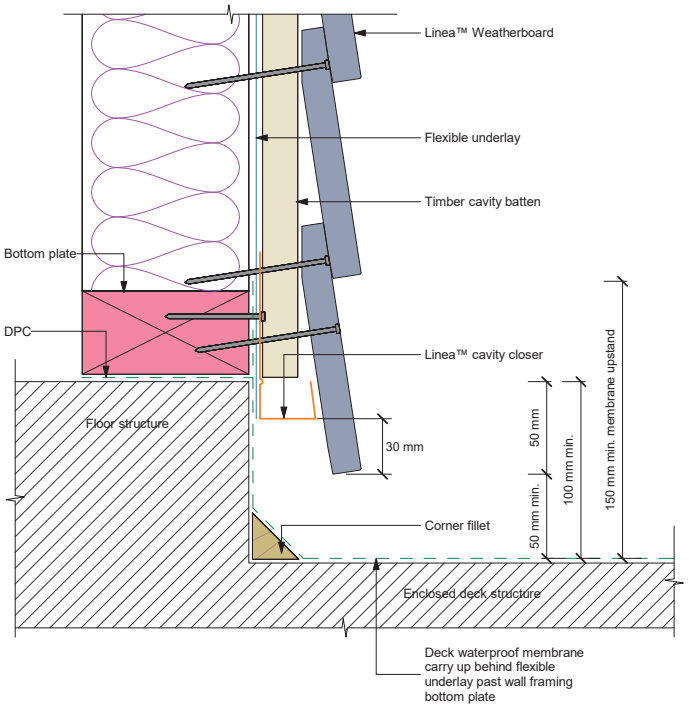

KDC - Approved Building Consent Document - BC210208 - Pg 159 of 197 - 2/07/2021 - ComplyNZ

Figure 6: Jointing off stud

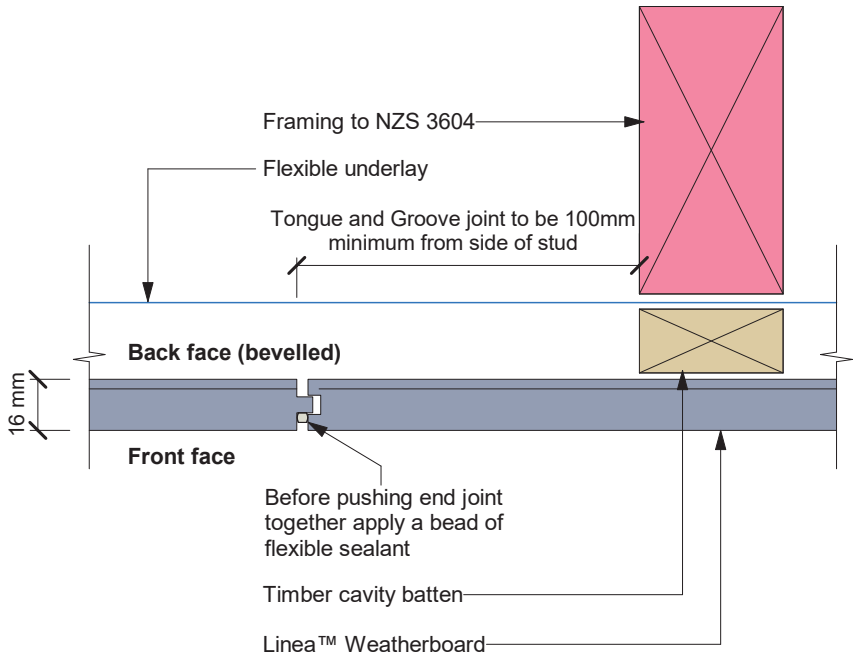

Figure 7: External corner soaker

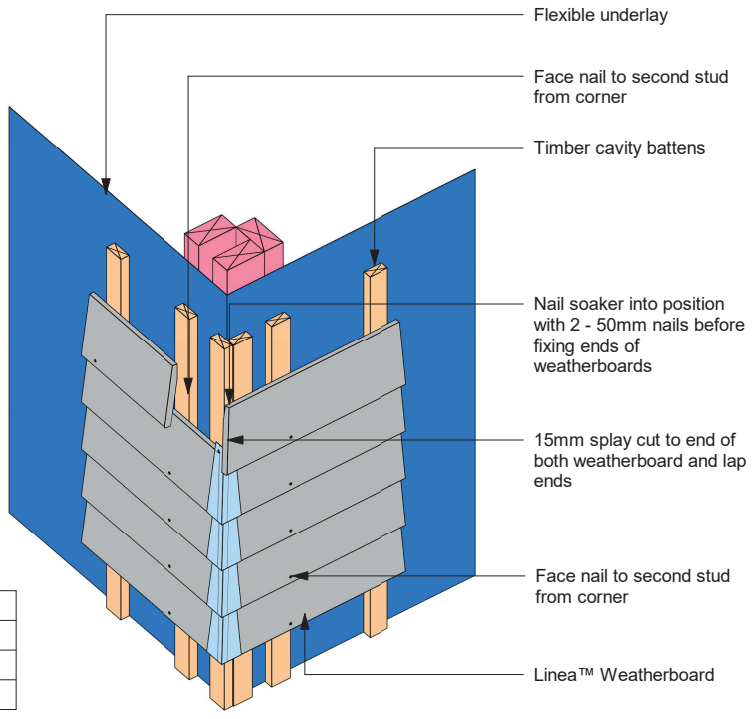

Soaker material	Nail material
Copper	Copper or phosphor bronze
Aluminium	Hot dip galvanised
Stainless steel	Stainless steel

KDC - Approved Building Consent Document - BC210208 - Pg 160 of 197 - 2/07/2021 - ComplyNZ

Figure 8: Aluminium box corner

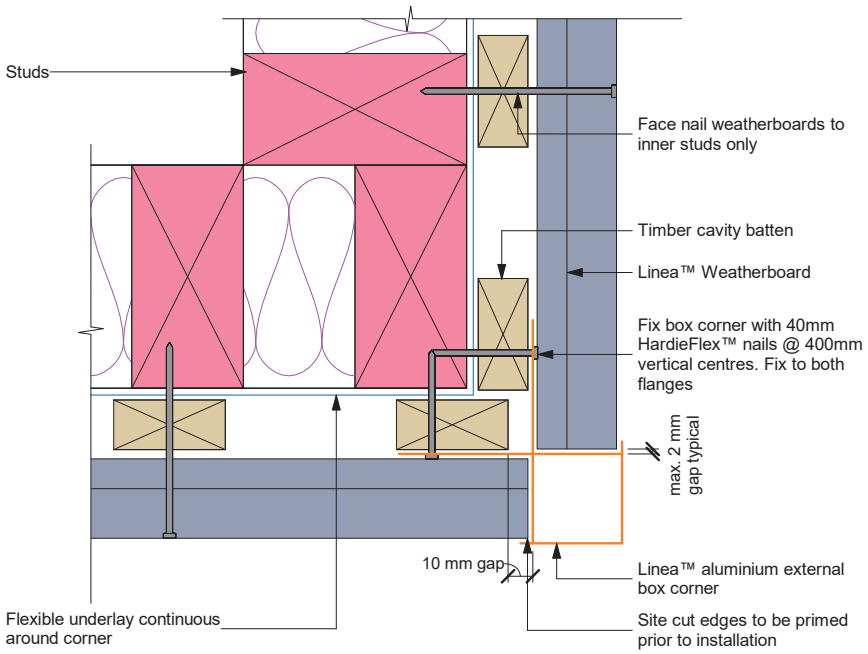

Note: Site cut edges to be primed

Figure 9: Boxed corner

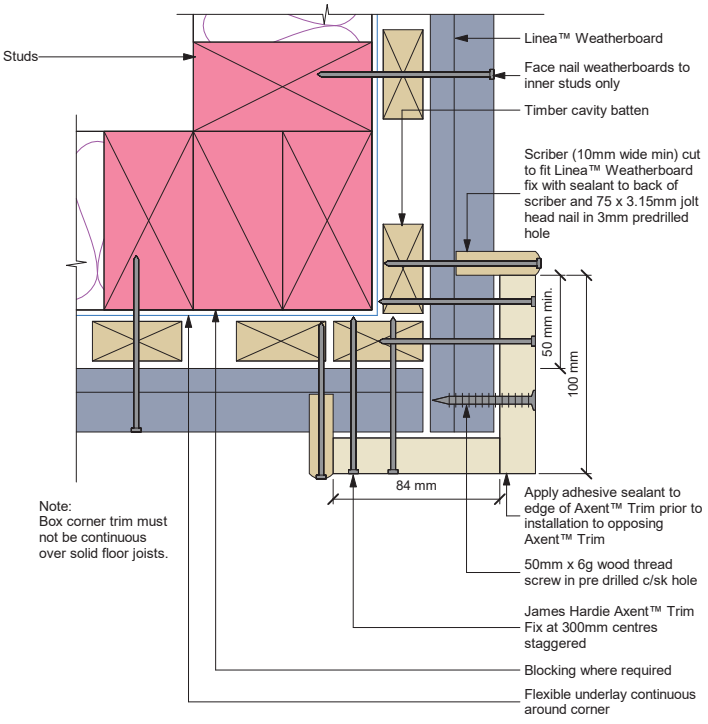

Note:
Box corner trim must not be continuous over solid floor joists.

KDC - Approved Building Consent Document - BC210208 - Pg 161 of 197 - 2/07/2021 - ComplyNZ

Figure 10: Mitre corner

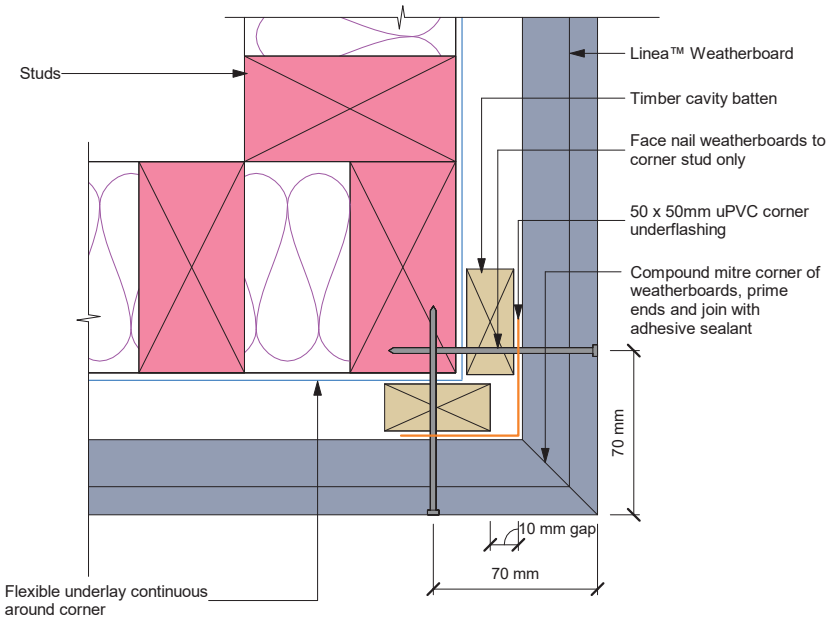

Note: Adhesive sealant must be used on the full end face of both weatherboards. Push lightly together

Figure 11: Internal 90 ° aluminium 'W' mould corner

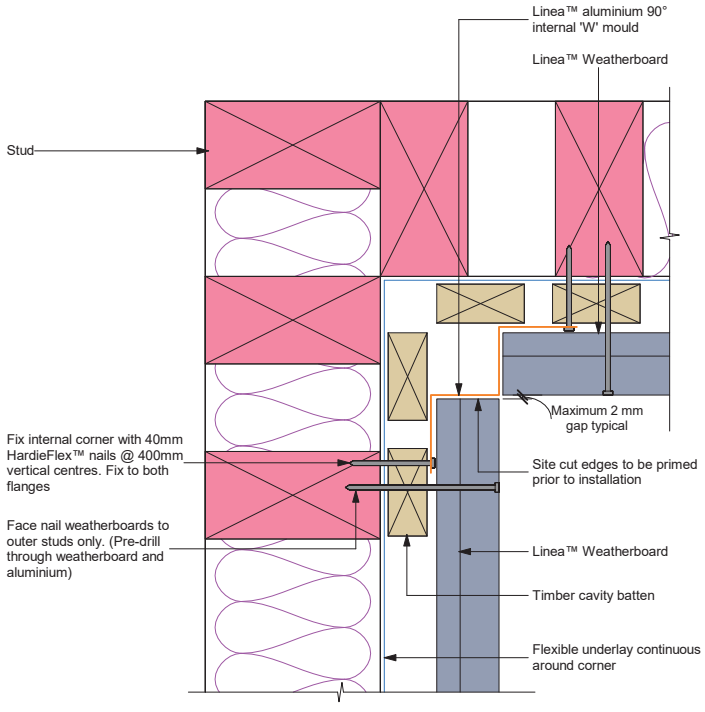

KDC - Approved Building Consent Document - BC210208 - Pg 162 of 197 - 2/07/2021 - ComplyNZ

Figure 12: Internal 135 º aluminium 'W' mould corner

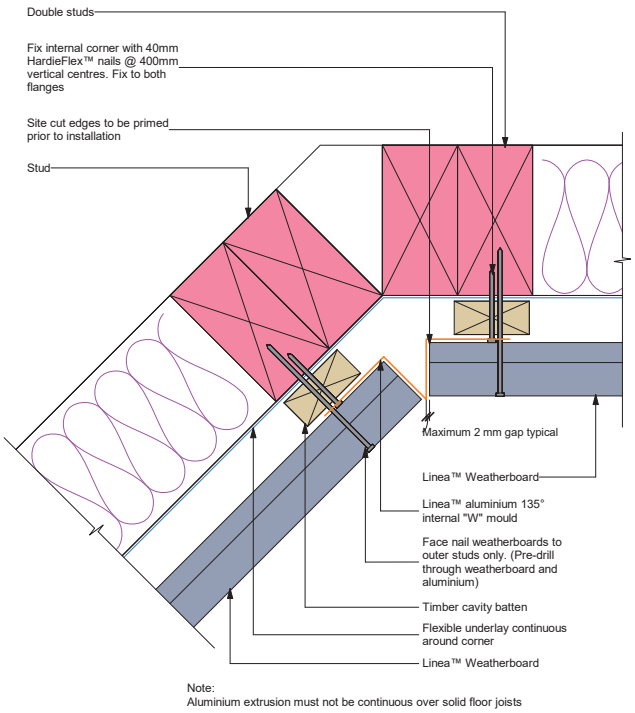

Note:
Aluminium extrusion must not be continuous over solid floor joists

Figure 13: Internal corner joint flashing

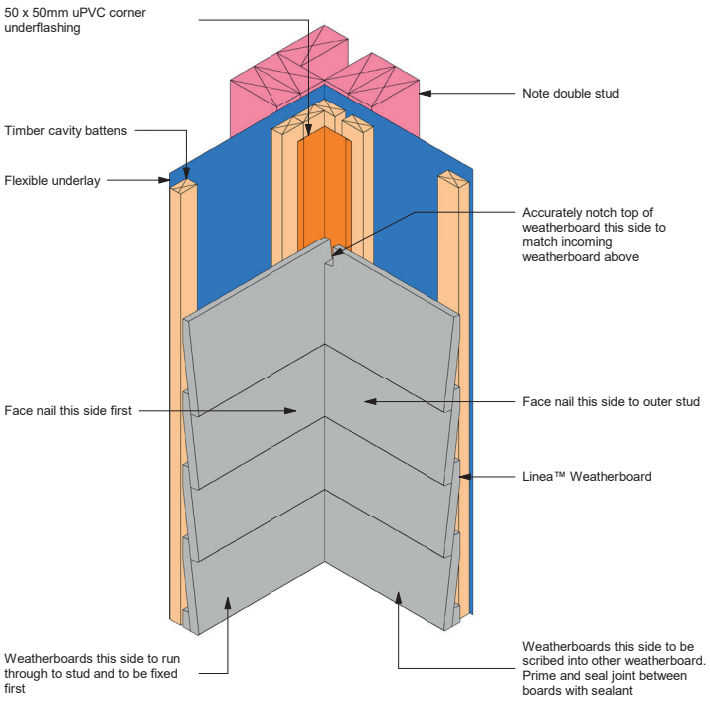

KDC - Approved Building Consent Document - BC210208 - Pg 163 of 197 - 2/07/2021 - ComplyNZ

Figure 14: Wall to soffit junction 'X'

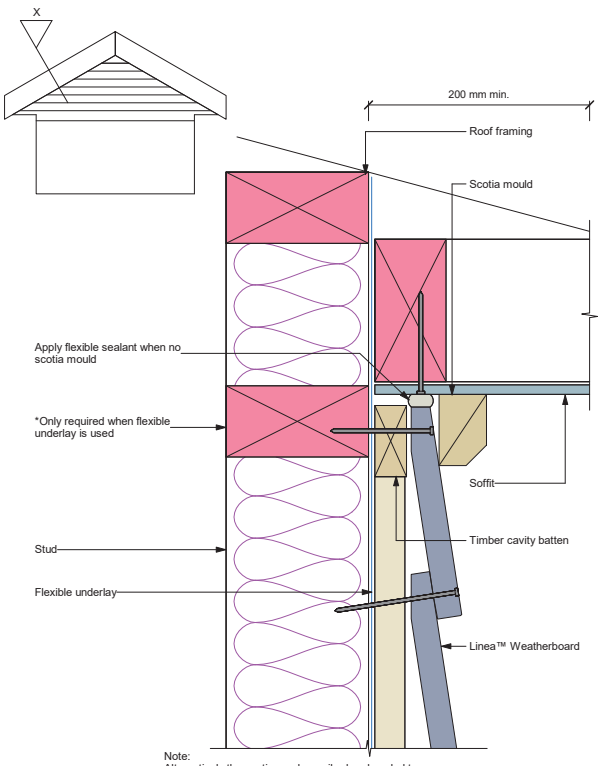

Note:
Alternatively the scotia can be scribed and sealed to Linea™ Weatherboard and the soffit lining

For soffits more than 200mm the Linea™ Weatherboard can be neat cut and silicone sealed to angle of soffit

Figure 15: Nil soffit detail

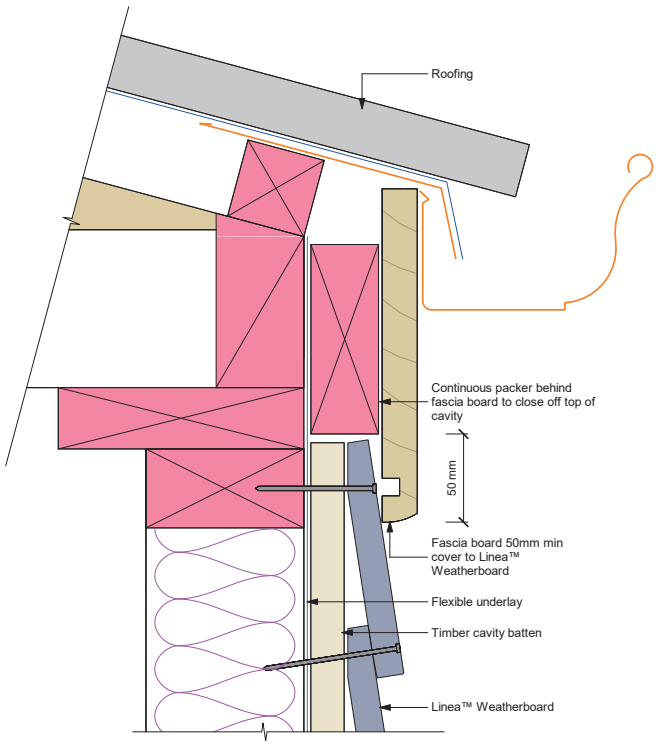

KDC - Approved Building Consent Document - BC210208 - Pg 164 of 197 - 2/07/2021 - ComplyNZ

Figure 16: Sloping soffit and wall junction

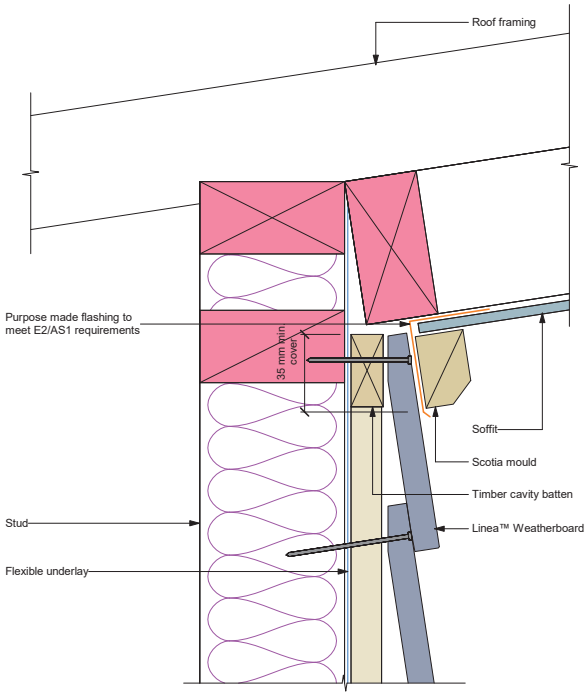

Note: Site cut edges to be primed

Figure 17: Window and door sill

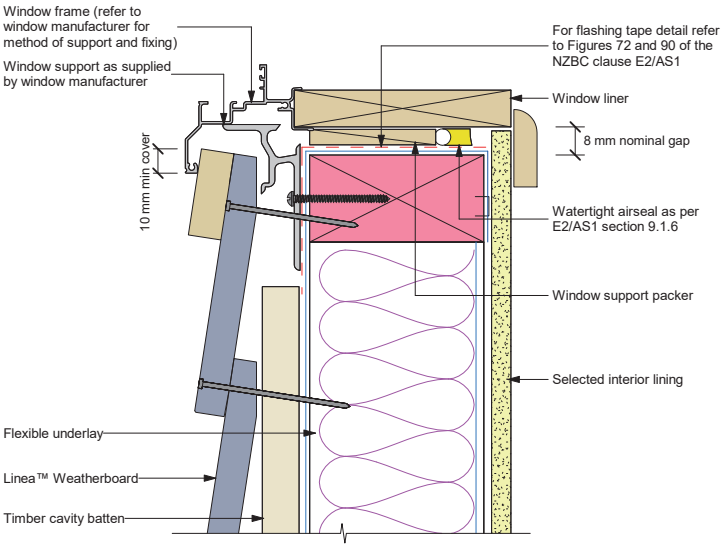

General notes for materials selection
1. Flashing materials must be selected based on environmental exposure, refer to NZS 3604 and Table 20 of NZBC E2/AS1
2. Flexible underlay must comply with acceptable solution E2/AS1
3. Flashing tape must have proven compatibility with the selected flexible underlay and other materials with which it comes into contact

Refer to the manufacturer or supplier for technical information for these materials

KDC - Approved Building Consent Document - BC210208 - Pg 165 of 197 - 2/07/2021 - ComplyNZ

Figure 18: Window head

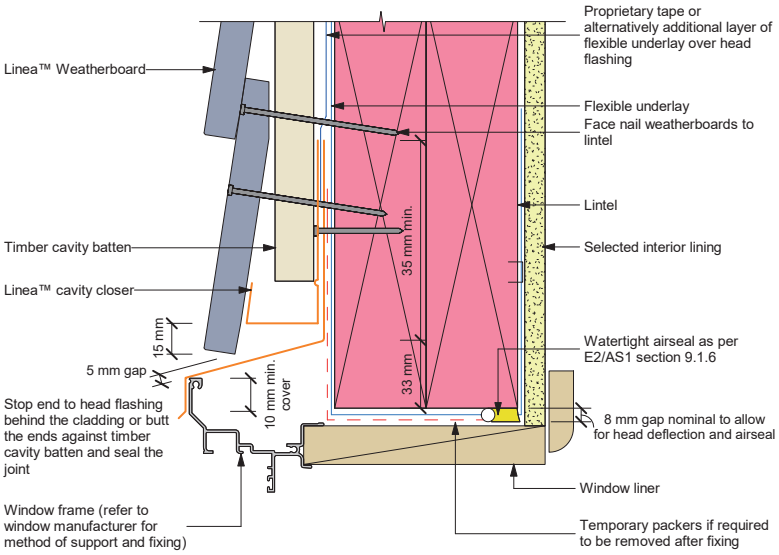

Note:
- Sealant must be installed between head flashing and window flange in VH and EH wind zones and SED pressures
- Alternatively, the head flashings can be formed with stop ends as per E2/AS1
- Refer to Figure 22 for sealing end battens to head flashing
- Site cut edges to be primed

Figure 19: Window jamb

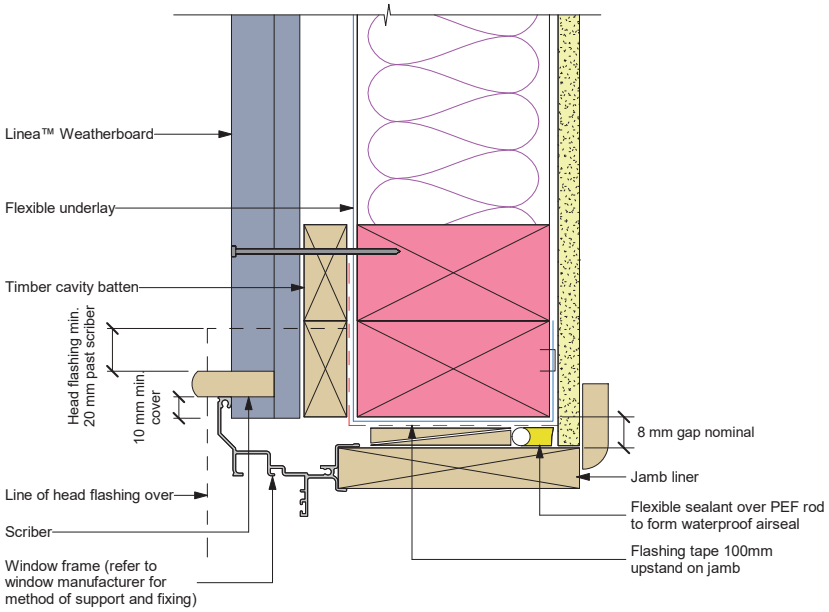

KDC - Approved Building Consent Document - BC210208 - Pg 166 of 197 - 2/07/2021 - ComplyNZ

Figure 20: Window head stop end

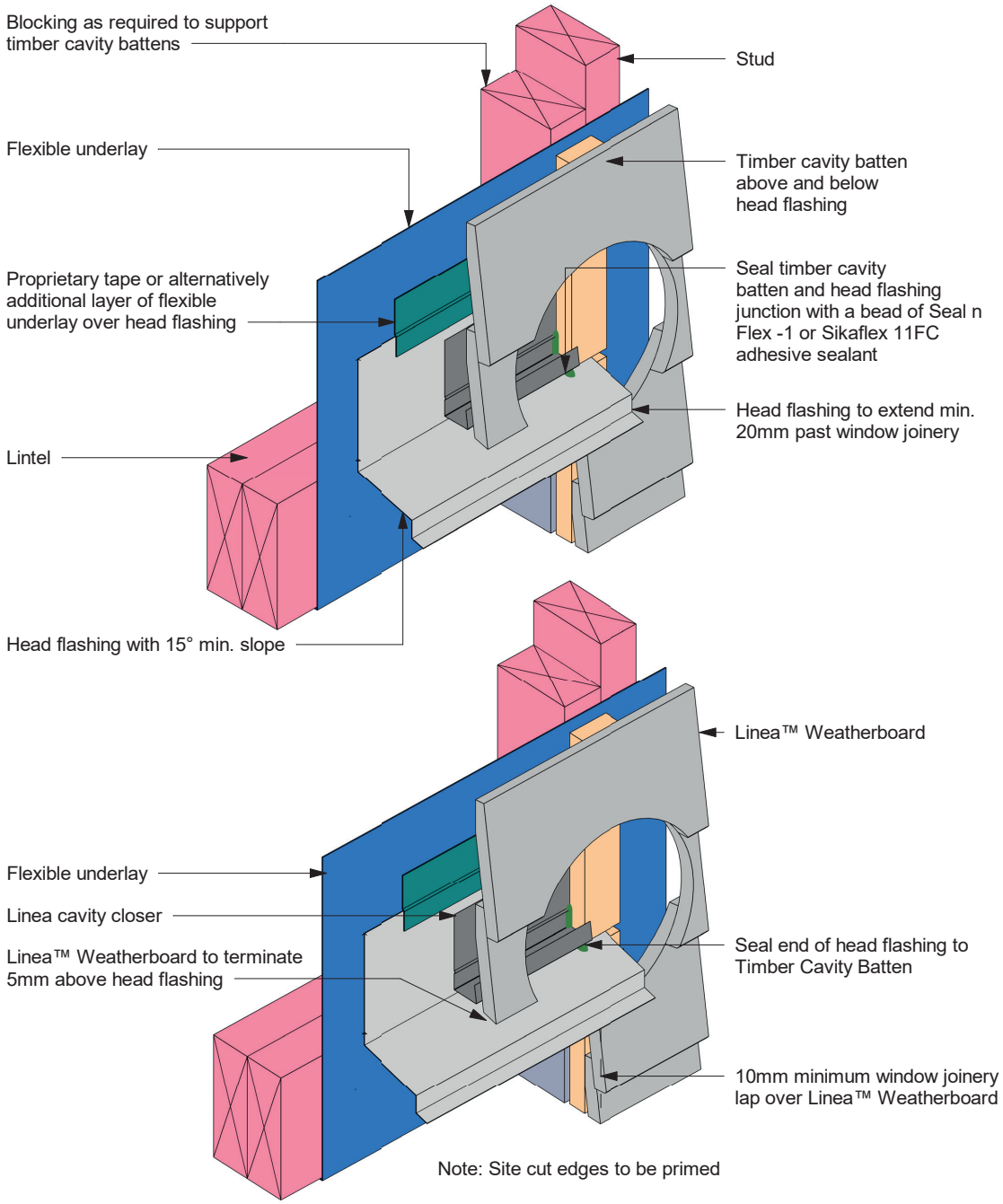

KDC - Approved Building Consent Document - BC210208 - Pg 167 of 197 - 2/07/2021 - ComplyNZ

Figure 21: Window sill with facing

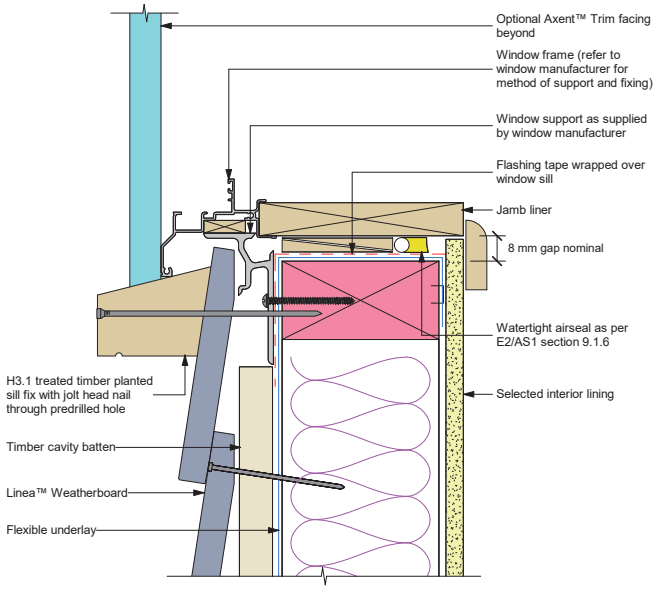

General notes for materials selection
1. Flashing materials must be selected based on environmental exposure, refer to NZS 3604 and Table 20 of NZBC E2/AS1
2. Flexible underlay must comply with acceptable solution E2/AS1
3. Flashing tape must have proven compatibility with the selected flexible underlay and other materials with which it comes into contact

Refer to the manufacturer or supplier for technical information for these materials

Figure 22: Window head with facings

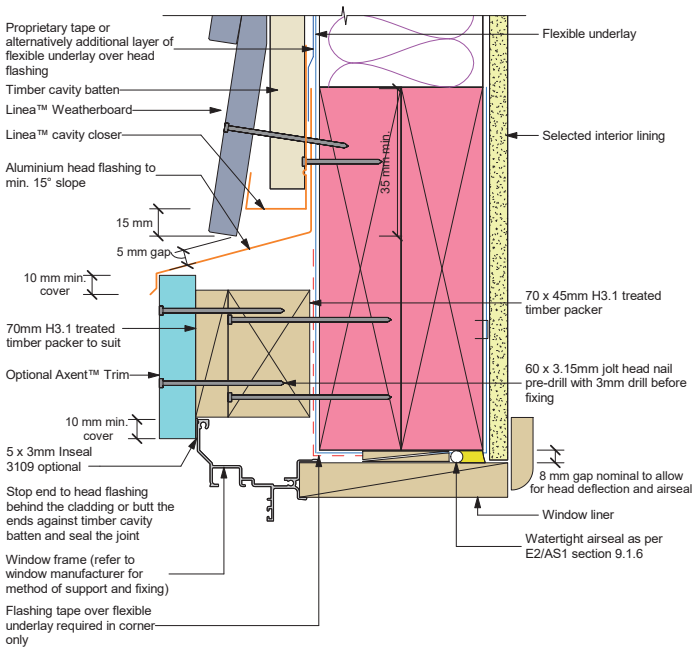

Note:
- Sealant must be installed between head flashing and window flange in VH and EH wind zones and SED pressures
- Alternatively, the head flashings can be formed with stop ends as per E2/AS1
- Refer to Figure 22 for sealing end battens to head flashing

KDC - Approved Building Consent Document - BC210208 - Pg 168 of 197 - 2/07/2021 - ComplyNZ

Figure 23: Window jamb with facings

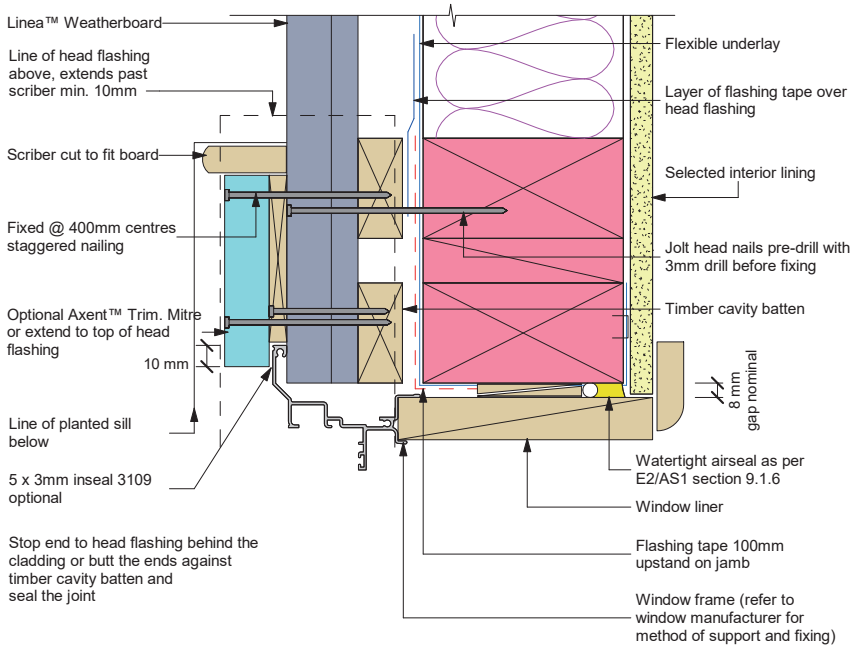

Note:
- Site cut edges to be primed

Figure 24: Door sill support detail

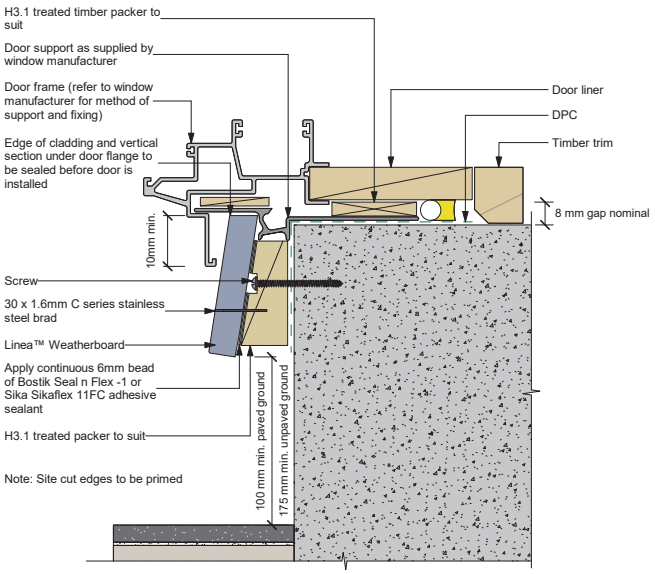

Refer to the manufacturer or supplier for technical information for these materials

General notes for materials selection
1. Flashing materials must be selected based on environmental exposure, refer to NZS 3604 and Table 20 of the NZBC E2/AS1
2. Flexible underlay must comply with acceptable solution E2/AS1
3. Flashing tape must have proven compatibility with the selected flexible underlay and other materials with which it comes into contact
4. Linea™ Weatherboard to have sealed butt joint over batten at each corner of opening

KDC - Approved Building Consent Document - BC210208 - Pg 169 of 197 - 2/07/2021 - ComplyNZ

Figure 25: Pipe penetration

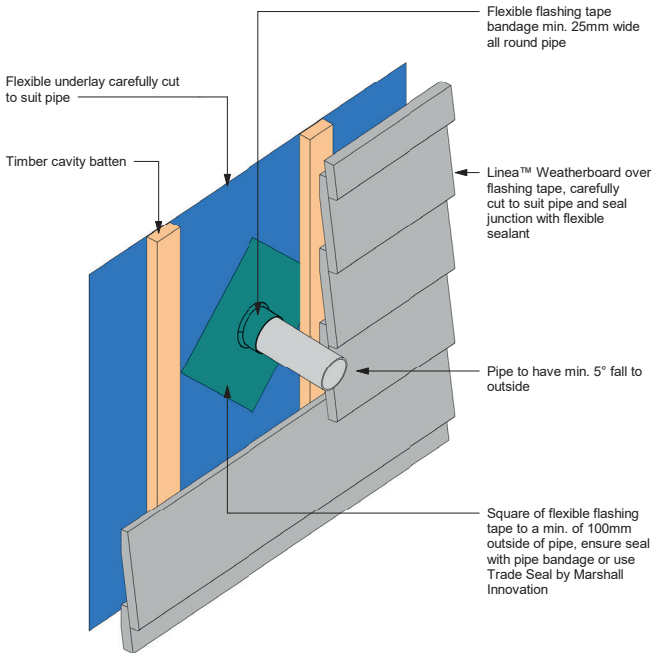

Note: Site cut edges to be primed

Figure 26: Continous cladding over joist

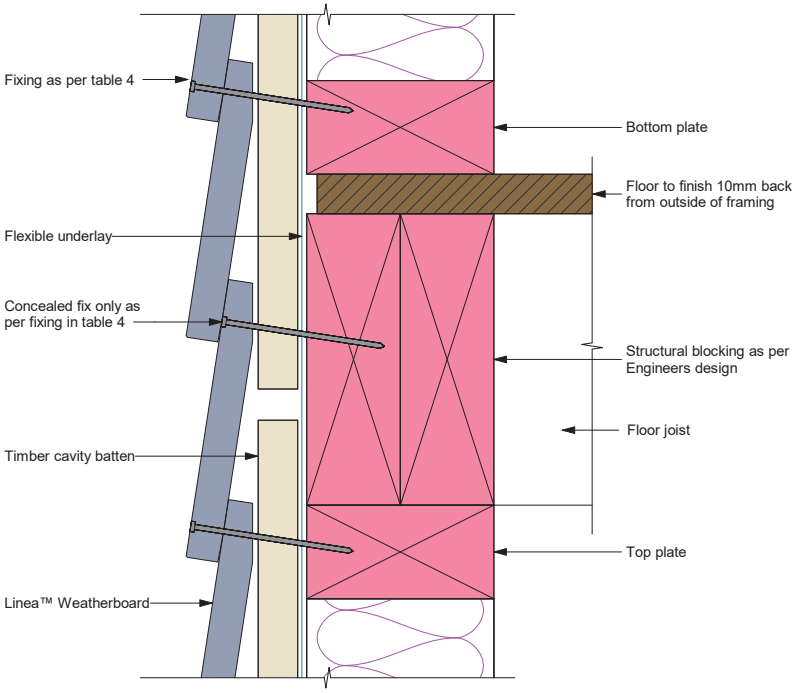

KDC - Approved Building Consent Document - BC210208 - Pg 170 of 197 - 2/07/2021 - ComplyNZ

Figure 27: Drained flashing joint at floor level

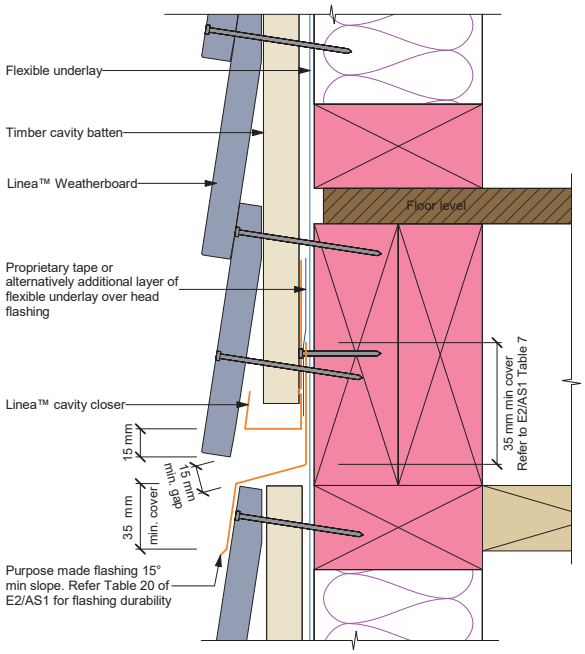

Note:
This detail is required to limit cavities to a maximum of 2 stories or 7 metres. Refer E2/AS1 clause 9.1.9.4.

Figure 28: Timber deck junction

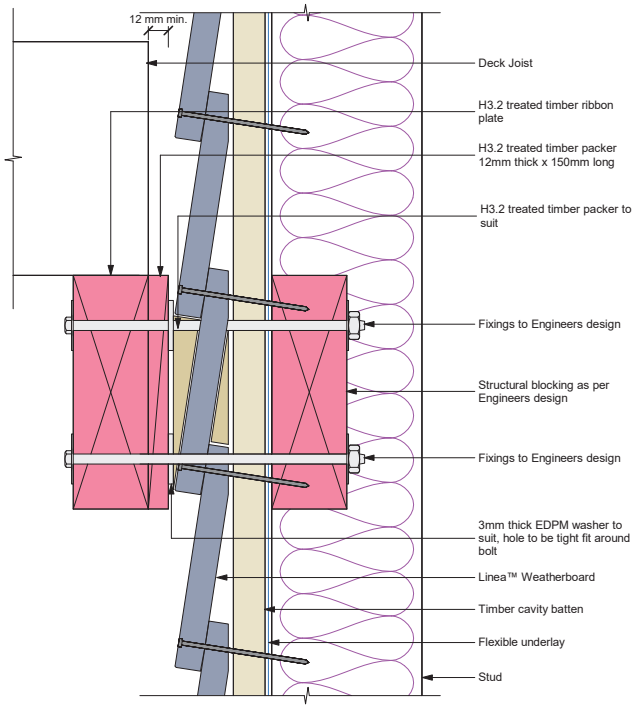

KDC - Approved Building Consent Document - BC210208 - Pg 171 of 197 - 2/07/2021 - ComplyNZ

Figure 29: One piece apron flashing joint

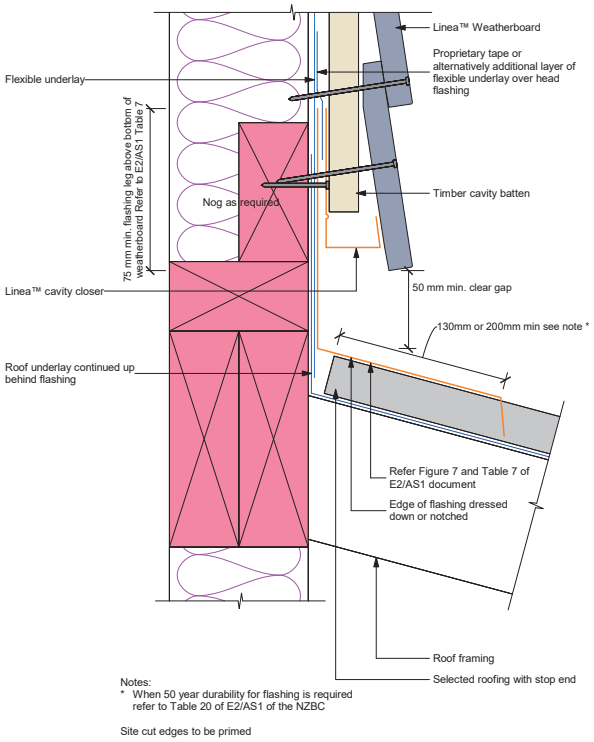

Figure 30: Roof to wall junction detail

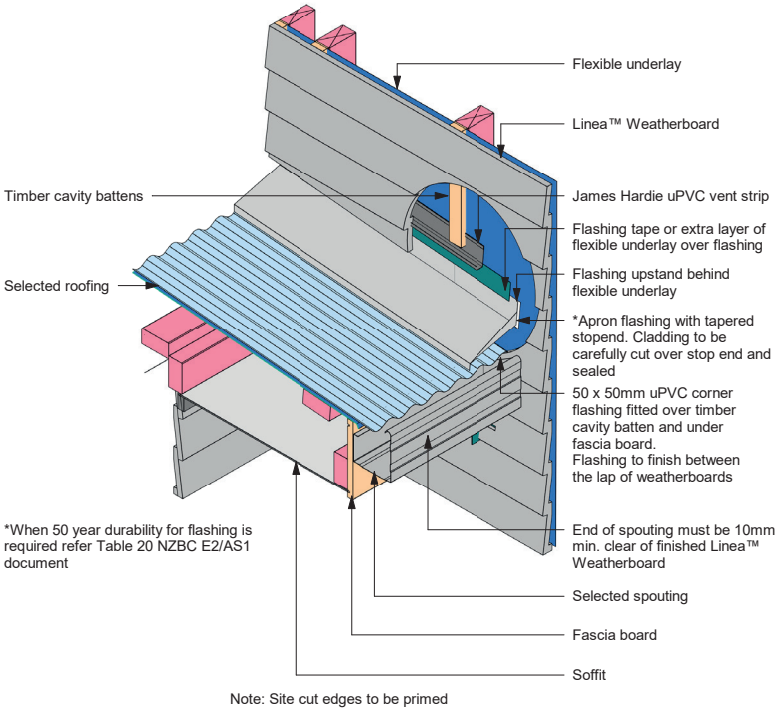

KDC - Approved Building Consent Document - BC210208 - Pg 172 of 197 - 2/07/2021 - ComplyNZ

Figure 31: Parapet flashing

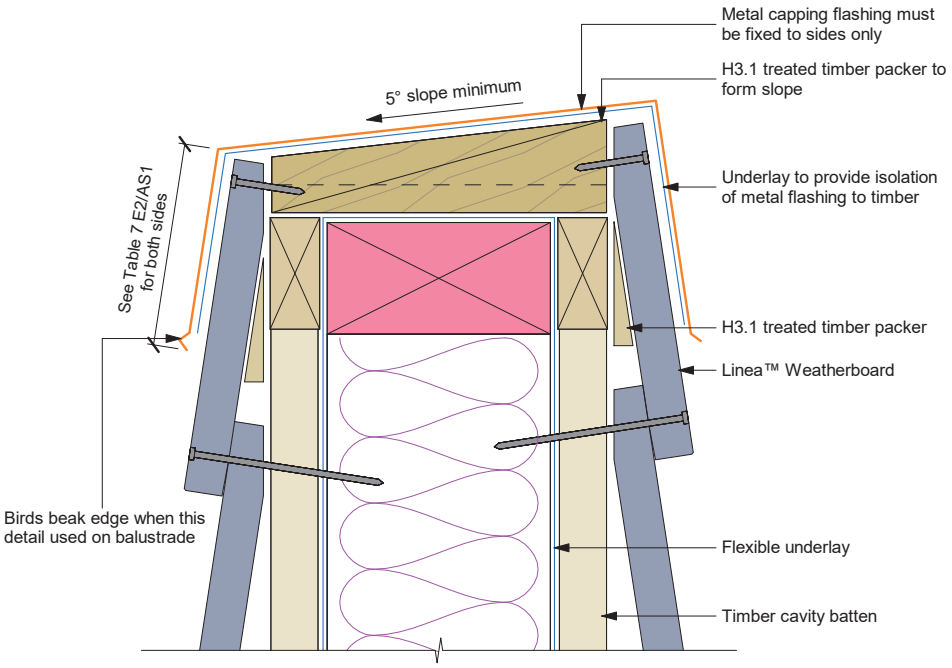

Figure 32: Enclosed deck balustrade to wall

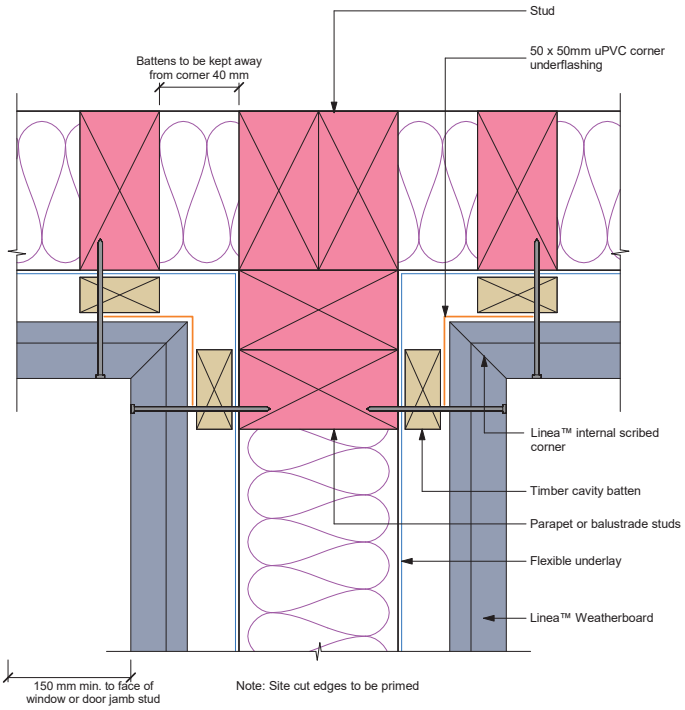

KDC - Approved Building Consent Document - BC210208 - Pg 173 of 197 - 2/07/2021 - ComplyNZ

Figure 33: Enclosed balustrade to wall

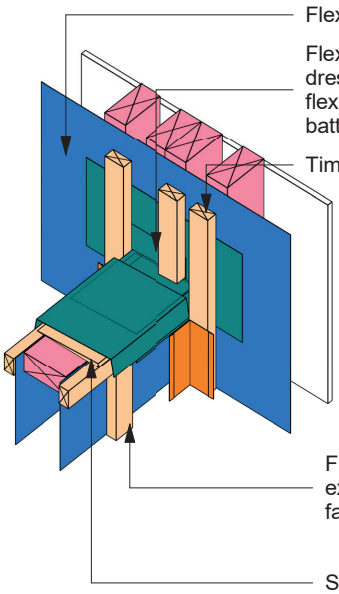

Batten and Flashing Tape Application Prior to Metal Flashing Fixing

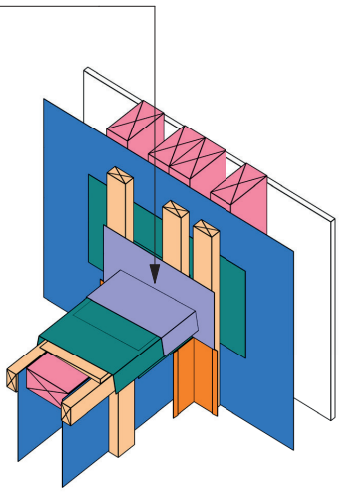

Saddle Flashing Application Prior to Cladding and Cap Flashing Fixing

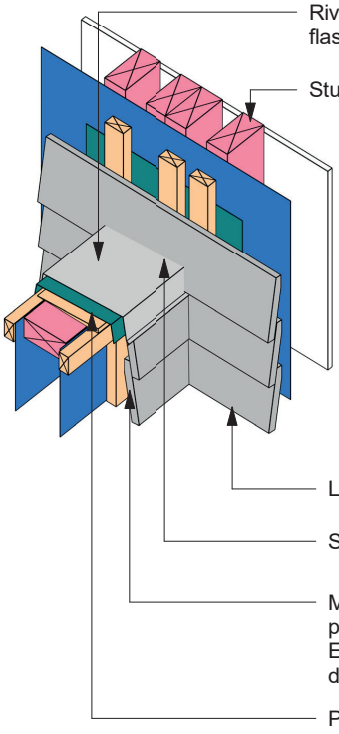

KDC - Approved Building Consent Document - BC210208 - Pg 174 of 197 - 2/07/2021 - ComplyNZ

Figure 34: Junction Linea™ Weatherboard and fascia board

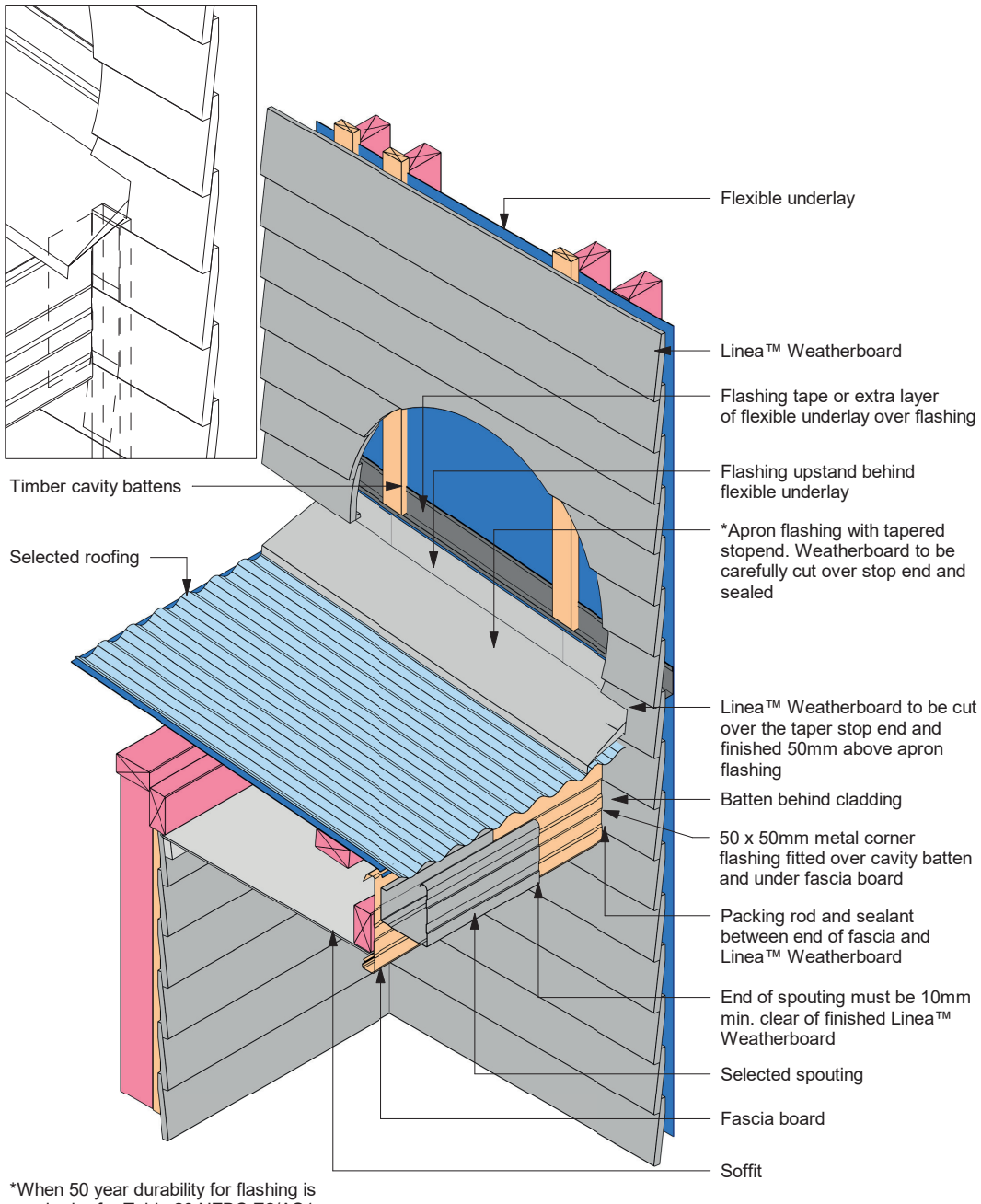

*When 50 year durability for flashing is required refer Table 20 NZBC E2/AS1 document

Note: Site cut edges to be primed

KDC - Approved Building Consent Document - BC210208 - Pg 175 of 197 - 2/07/2021 - ComplyNZ

Figure 35: Enclosed roof to wall intersection

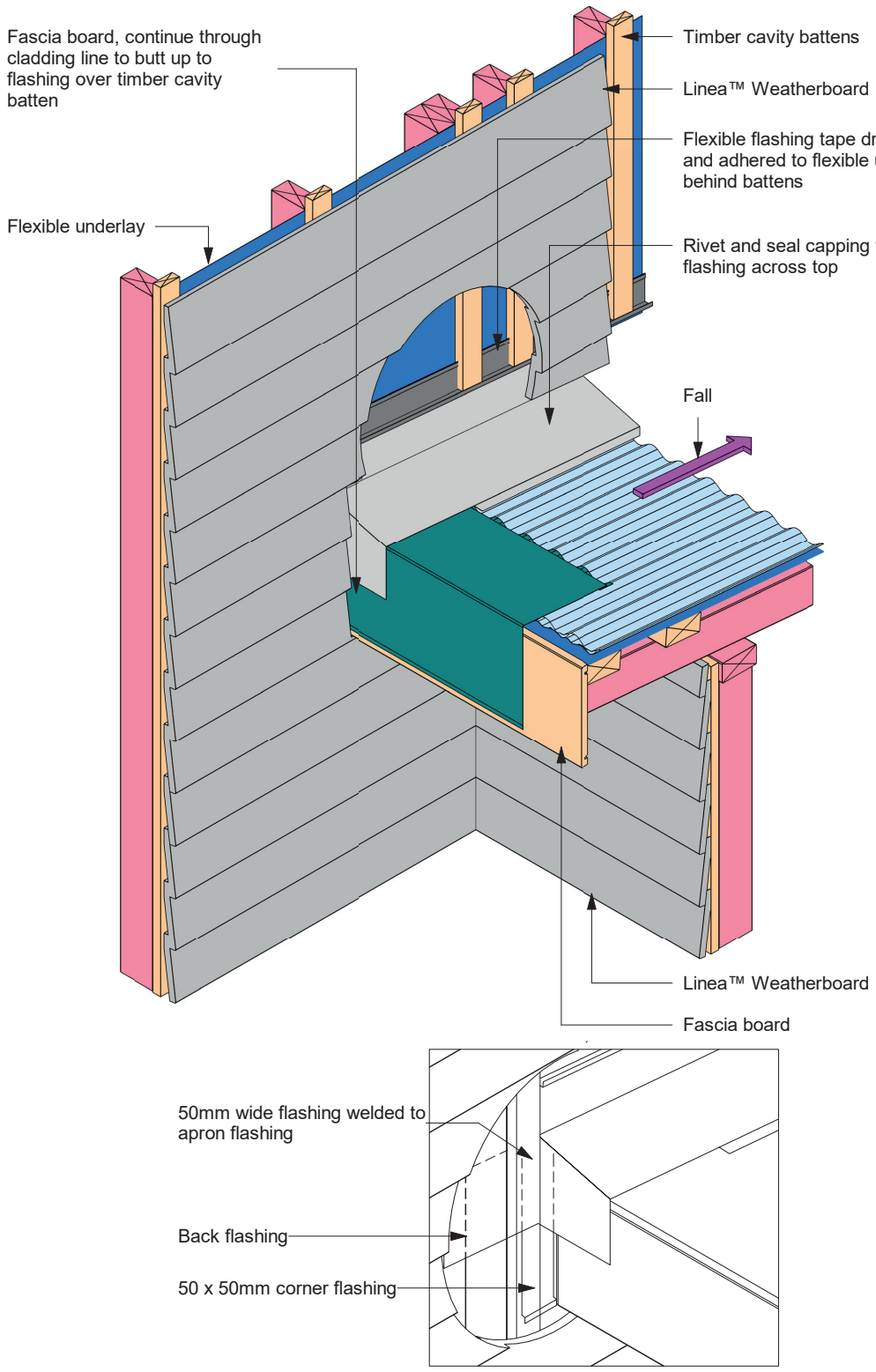

KDC - Approved Building Consent Document - BC210208 - Pg 176 of 197 - 2/07/2021 - ComplyNZ

Figure 36: Garage door head

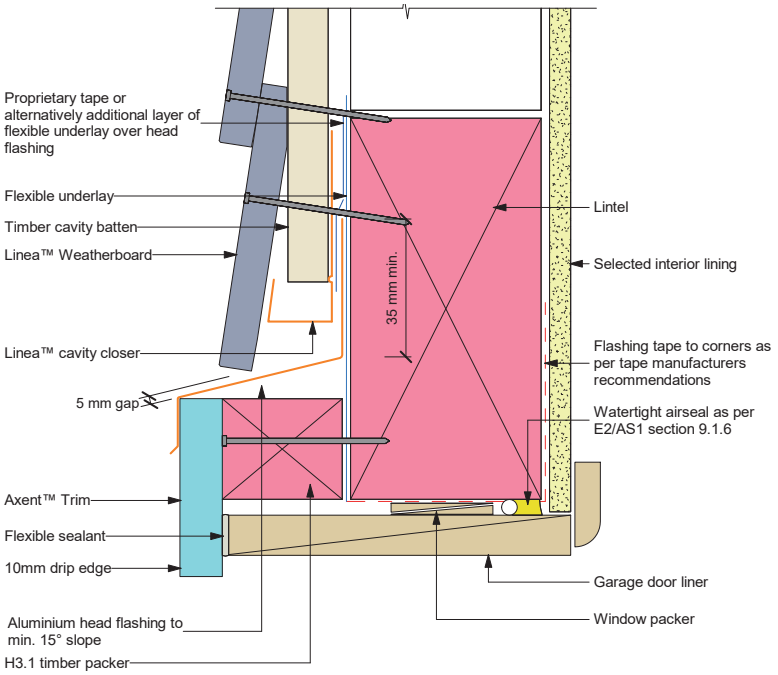

Note:
- Sealant must be applied between head flashing and liner in VH and EH wind zones and SED wind pressures
- Site cut edges to be primed

Figure 37: Garage door jamb

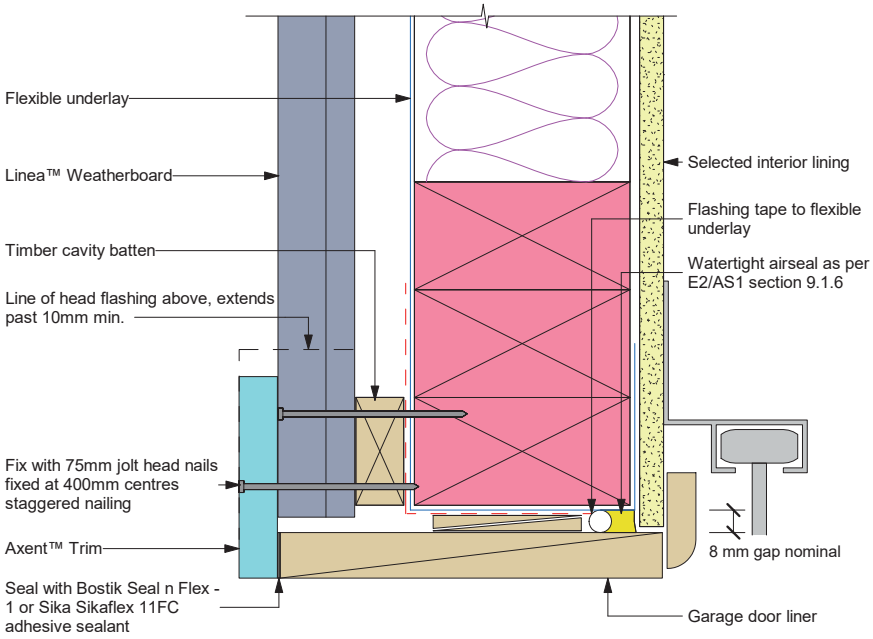

Note: Site cut edges to be primed

KDC - Approved Building Consent Document - BC210208 - Pg 177 of 197 - 2/07/2021 - ComplyNZ

Figure 38: Framing setout building height over 10m

KDC - Approved Building Consent Document - BC210208 - Pg 178 of 197 - 2/07/2021 - ComplyNZ

Figure 39: Intertenancy vertical fire separation

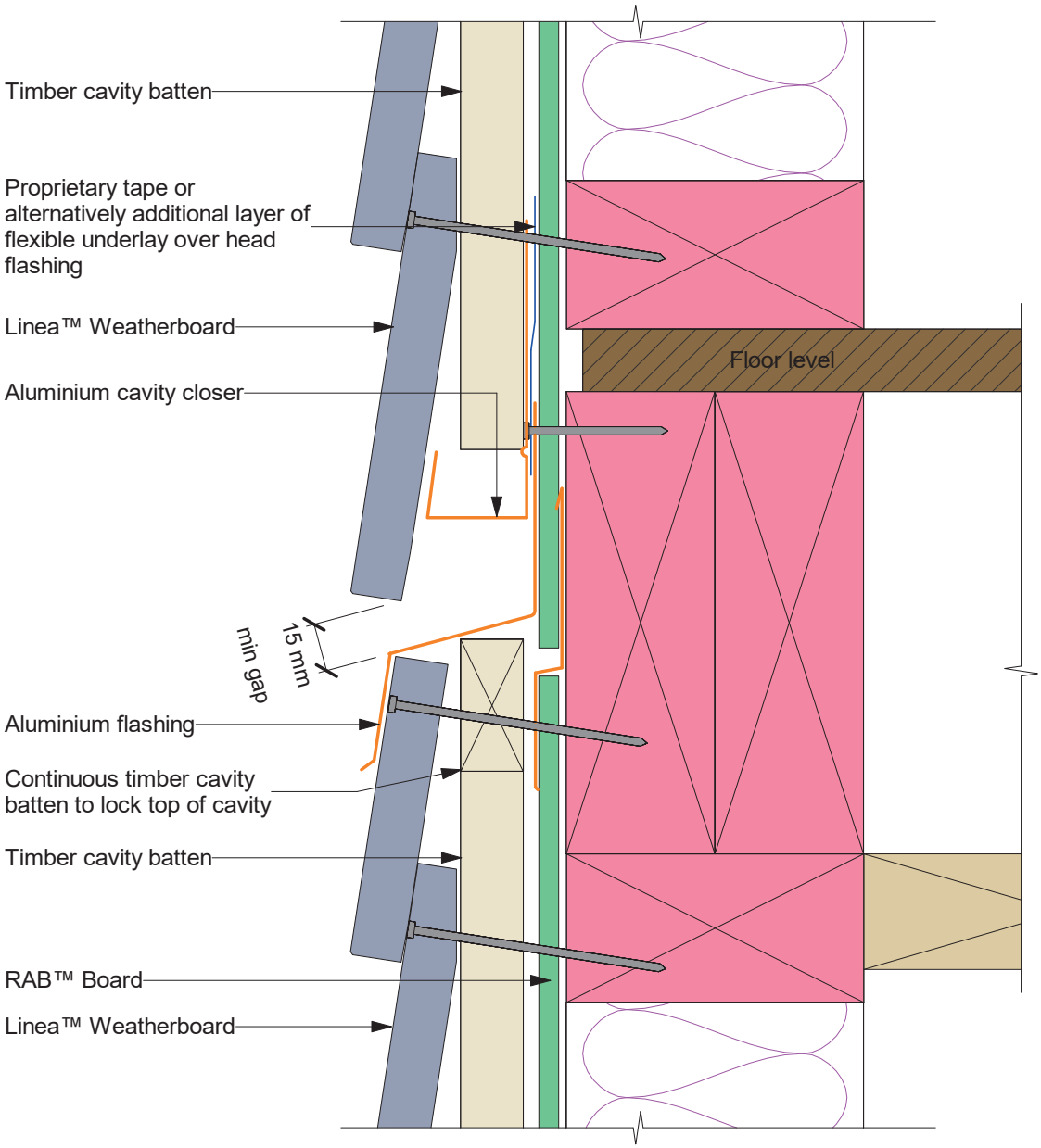

Notes

KDC - Approved Building Consent Document - BC210208 - Pg 179 of 197 - 2/07/2021 - ComplyNZ

Notes

KDC - Approved Building Consent Document - BC210208 - Pg 180 of 197 - 2/07/2021 - ComplyNZ

Notes

KDC - Approved Building Consent Document - BC210208 - Pg 181 of 197 - 2/07/2021 - ComplyNZ

KDC - Approved Building Consent Document - BC210208 - Pg 182 of 197 - 2/07/2021 - ComplyNZ

Linea™ WEATHERBOARD

Product Warranty

James Hardie New Zealand Limited ("James Hardie") warrants for a period of 25 years from the date of purchase that the Linea™ Weatherboard (the "Product"), will be free from defects due to defective factory workmanship or materials and, subject to compliance with the conditions below, will be resistant to cracking, rotting, fire and damage from termite attacks to the extent set out in James Hardie's relevant published literature current at the time of installation. James Hardie warrants for a period of 15 years from the date of purchase that the Axent™ Trim and accessories supplied by James Hardie will be free from defects due to defective factory workmanship or materials.

Nothing in this document shall exclude or modify any legal rights a customer may have under the Consumer Guarantees Act or otherwise which cannot be excluded or modified at law.

CONDITIONS OF WARRANTY:

The warranty is strictly subject to the following conditions:

a) James Hardie will not be liable for breach of warranty unless the claimant provides proof of purchase and makes a written claim either within 30 days after the defect would have become reasonably apparent or, if the defect was reasonably apparent prior to installation, then the claim must be made prior to installation.

b) This warranty is not transferable.

c) The Product must be installed and maintained strictly in accordance with the relevant James Hardie literature current at the time of installation and must be installed in conjunction with the components or products specified in the literature. Further, all other products, including coating and jointing systems, applied to or used in conjunction with the Product must be applied or installed and maintained strictly in accordance with the relevant manufacturer's instructions and good trade practice.

d) The project must be designed and constructed in strict compliance with all relevant provisions of the current New Zealand Building Code ("The NZBC"), regulations and standards.

e) The claimant's sole remedy for breach of warranty is (at James Hardie's option) that James Hardie will either supply replacement product, rectify the affected product or pay for the cost of the replacement or rectification of the affected product.

f) James Hardie will not be liable for any losses or damages (whether direct or indirect) including property damage or personal injury, consequential loss, economic loss or loss of profits, arising in contract or negligence or howsoever arising. Without limiting the foregoing James Hardie will not be liable for any claims, damages or defects arising from or in any way attributable to poor workmanship, poor design or detailing, settlement or structural movement and/or movement of materials to which the Product is attached, incorrect design of the structure, acts of God including but not limited to earthquakes, cyclones, floods or other severe weather conditions or unusual climatic conditions, efflorescence or performance of paint/coatings applied to the Product, normal wear and tear, growth of mould, mildew, fungi, bacteria, or any organism on any Product surface or Product (whether on the exposed or unexposed surfaces).

g) All warranties, conditions, liabilities and obligations other than those specified in this warranty are excluded to the fullest extent allowed by law.

h) If meeting a claim under this warranty involves re-coating of Products, there may be slight colour differences between the original and replacement Products due to the effects of weathering and variations in materials over time.

Disclaimer: The recommendations in James Hardie's literature are based on good building practice, but are not an exhaustive statement of all relevant information and are subject to conditions (c), (d), (f) and (g) above. James Hardie has tested the performance of Linea™ Weatherboard when installed in accordance with the appropriate Linea Weatherboard (cavity or direct fixed) technical specifications, in accordance with the standards and verification methods required by the NZBC and those test results demonstrate the product complies with the performance criteria established by the NZBC. However, as the successful performance of the relevant system depends on numerous factors outside the control of James Hardie (e.g. quality of workmanship and design) James Hardie shall not be liable for the recommendations made in its literature and the performance of the relevant system, including its suitability for any purpose or ability to satisfy the relevant provisions of the NZBC, regulations and standards, as it is the responsibility of the building designer to ensure that the details and recommendations provided in the relevant James Hardie installation manual are suitable for the intended project and that specific design is conducted where appropriate.

Copyright 2020. © James Hardie New Zealand Limited. TM and ® denotes a Trademark or Registered Mark owned by James Hardie Technology Limited.

KDC - Approved Building Consent Document - BC210208 - Pg 183 of 197 - 2/07/2021 - ComplyNZ

JamesHardie™

Ask James Hardie™ | Call 0800 808 868 | jameshardie.co.nz

Copyright 2020. © James Hardie New Zealand Limited. TM and ® denotes a Trademark or Registered Mark owned by James Hardie Technology Limited.

KDC - Approved Building Consent Document - BC210208 - Pg 184 of 197 - 2/07/2021 - ComplyNZ

BRANZ Appraised

Appraisal No. 427 [2021]

GIB® WET AREA SYSTEMS

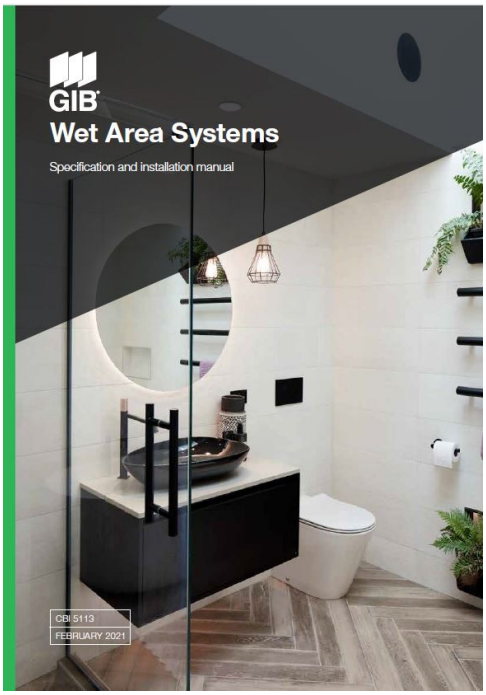

Appraisal No. 427 (2021)

This Appraisal replaces BRANZ Appraisal No. 427 (2007)

BRANZ Appraisals

Technical Assessments of products for building and construction.

Winstone Wallboards Ltd
PO Box 12 256
Penrose
Auckland 1642
Tel: 09 633 0100
Email: info@gib.co.nz
Web: www.gib.co.nz

BRANZ
1222 Moonshine Rd,
RD 1, Porirua 5381
Private Bag 50 908
Porirua 5240,
New Zealand
Tel: 04 237 1170
branz.co.nz

Product

1.1 GIB® Wet Area Systems are for the interior lining of timber and steel-framed walls and ceilings in wet areas such as bathrooms, laundries, kitchens and toilets where a water-resistant lining material is desirable.

Scope

2.1 GIB® Wet Area Systems have been appraised for use as a wet area wall and ceiling lining in buildings within the following scope:

- on timber-framed walls and ceilings within the scope limitations on NZS 3604; or,
- on steel-framed walls and ceilings within the scope limitations of NASH Standard Part 2, or,
- on timber and light gauge steel-framed walls and ceilings subject to specific design.

Building Regulations

New Zealand Building Code (NZBC)

3.1 **In the opinion of BRANZ, GIB® Wet Area Systems, if designed, used, installed and maintained in accordance with the statements and conditions of this Appraisal, will meet or contribute to meeting the following provisions of the NZBC:**

Clause B1 STRUCTURE: Performance B1.3.1, B1.3.2 and B1.3.4. GIB® Wet Area Systems meet the requirements for loads arising from self-weight and impact [i.e. B1.3.3 (a) and (j)]. See Paragraphs 8.1-8.3.

Clause B2 DURABILITY: Performance B2.3.1 (b) 15 years and B2.3.1 (c) 5 years. GIB® Wet Area Systems meet these requirements. See Paragraphs 9.1-9.5.

Clause E3 INTERNAL MOISTURE: Performance E3.3.4 and E3.3.5. GIB® Wet Area Systems meet these requirements. See Paragraphs 12.1-12.3.

Clause F2 HAZARDOUS BUILDING MATERIALS: Performance F2.3.1. GIB® Wet Area Systems meet this requirement.

Readers are advised to check the validity of this Appraisal by referring to the Valid Appraisals listing on the BRANZ website, or by contacting BRANZ.

KDC - Approved Building Consent Document - BC210208 - Pg 185 of 197 - 2/07/2021 - ComplyNZ

Technical Specification

4.1 The GIB® plasterboards and accessories used in GIB® Wet Area Systems, and supplied by Winstone Wallboards Ltd are as follows:

GIB® Plasterboards

- **GIB Aqualine®** is a paper-bound, modified water-resistant gypsum-plaster core sheet lining material. It is available in 10 and 13 mm sheet thicknesses. Sheets are available in various edge profiles and lengths from 2,400 mm to 4,800 mm. Refer to Table 1. The nominal sheet weights are 8 kg/m² and 11 kg/m² for 10 mm and 13 mm thick sheets respectively. GIB Aqualine® face paper is green in colour.
- **GIB Toughline® Aqua** is a paper-bound, modified water-resistant gypsum-plaster core sheet lining material. It is available in a sheet thickness of 13 mm. Sheets are available in various edge profiles and lengths from 2,400 mm to 3,000 mm. Refer to Table 1. The nominal sheet weight is 11.4 kg/m². GIB Toughline® Aqua face paper is mauve in colour.
- **GIB Weatherline®** is an exterior-grade, glass-fibre fleece-wrapped modified-gypsum core sheet material. The product is available in 10 mm and 13 mm thicknesses and a board width of 1,200 mm. Standard sheet lengths are 2,450, 2,700 and 3,000 mm. Custom sheet lengths are also available. The nominal sheet weights are 9 kg/m² and 11.5 kg/m² for 10 mm and 13 mm thick sheets respectively.

Table 1: GIB® Wet Area Plasterboard Available Sheet Sizes

Plasterboard Type	Sheet Thickness (mm)	Sheet Edge Profile	Sheet Width (mm)	Sheet Length (mm)					
				2,400	2,450	2,700	3,000	3,600	4,800
GIB Aqualine®	10	TE/TE	1,200	✓		✓	✓	✓	
		TE/SE	1,200	✓					✓
		TE/SE	1,350	✓				✓	
	13	TE/TE	1,200	✓		✓	✓	✓	
GIB Toughline® Aqua	13	TE/TE	1,200	✓		✓	✓		
GIB Weatherline®	10	SE/SE	1,200		✓	✓	✓		
	13	SE/SE	1,200			✓	✓		

TE = Tapered Edge SE = Square Edge

Fastenings

- GIB® Grabber® High Thread Drywall screws for fixing to timber: 6 g x 25 mm and 32 mm.
- GIB® Grabber® Self Tapping Drywall screws for fixing to light gauge steel: 6 g x 25 mm and 32 mm.

Adhesive and Sealants

- GIBFix® One (Acrylic).
- GIBFix® All-Bond (Solvent).

GIB® Accessories

- Corner Support Angle - GIBFix® Angle or GIB® Rondo® NZ18. Minimum 32 x 32 x 0.55 mm galvanised metal angle.

GIB® Jointing Compounds

- As specified in the GIB® Wet Area Systems and GIB® Site Guide Technical Literature.

Readers are advised to check the validity of this Appraisal by referring to the Valid Appraisals listing on the BRANZ website, or by contacting BRANZ.

KDC - Approved Building Consent Document - BC210208 - Pg 186 of 197 - 2/07/2021 - ComplyNZ

4.2 System components and accessories for the GIB® Wet Area Systems, which are supplied by the building contractor are:

Waterproofing

- A waterproofing system complying with AS/NZS 4858.

Finishes

- Finishes such as tiling, flexible sheet vinyl, paints and wallpapers have not been assessed and are outside the scope of this Appraisal.

Handling and Storage

5.1 The best results are achieved when GIB® plasterboards are treated as a finishing material and protected from damage. Sheets must be stacked flat and kept dry at all times. For limits on stack heights see the GIB® Site Guide. Sheets must be carried on edge and not dragged.

5.2 All accessories must be kept dry.

Technical Literature

6.1 Refer to the Appraisals listing on the BRANZ website for details of the current Technical Literature for GIB® Wet Area Systems. The Technical Literature must be read in conjunction with this Appraisal. All aspects of design, use, installation and maintenance contained in the Technical Literature and within the scope of this Appraisal must be followed.

Design Information

General

7.1 GIB® Wet Area Systems provide a water-resistant lining as a base for finishing systems in wet areas such as bathrooms, toilets, laundries and kitchens. The typical finishes are ceramic tiles and flexible sheet vinyl to walls, and paint and wallpaper to walls and ceilings. [*Note: GIB Weatherline® is a suitable substrate for ceramic tiles and sheet vinyl. For paint or wallpaper finishes use GIB Aqualine® or GIB Toughline® Aqua.]*

7.2 GIB® Wet Area Systems must not be used in the following situations:

- For bracing applications in shower areas or adjacent baths [See Paragraphs 7.4 and 8.2].
- In areas of high humidity [above 90% RH] or continually wet areas such as group showers, steam rooms, or swimming pools.
- Installed over a vapour barrier.
- Applied directly to masonry, concrete or solid plaster.
- Applied over other sheet lining materials.
- Used externally of the building envelope.
- Exposed to temperatures of 52°C or greater for prolonged periods. [Refer to appliance and fitting manufacturers for installation details.]

7.3 GIB Aqualine® may be substituted for some other GIB® plasterboard products in specific GIB® Bracing Systems, GIB® Fire Rated Systems and GIB® Noise Control Systems. Refer to the relevant systems technical literature for details.

Readers are advised to check the validity of this Appraisal by referring to the Valid Appraisals listing on the BRANZ website, or by contacting BRANZ.

KDC - Approved Building Consent Document - BC210208 - Pg 187 of 197 - 2/07/2021 - ComplyNZ

Wet Areas

7.4 Wet areas are spaces where sanitary fixtures and sanitary appliances are located such as bathrooms, toilets, laundries and kitchens. There are two general categories of wet areas as follows:

- Water Splash – These are areas subject to intermittent splashing of water such as around baths, vanities, tubs and sinks.
- Shower Areas – These are areas subject to frequent and heavy water splash such as enclosed showers, unenclosed shower zones and showers over baths.

7.5 Both the above wet area categories must be finished with surfaces and joints that are impervious and easily cleaned. In addition, shower areas must be waterproofed. This can be achieved using proprietary rigid shower lining systems, flexible vinyl shower wall finishes, or tiling. Tiled shower areas must include a wet area waterproofing membrane system under the tiles.

Intertenancy Walls – Wet Areas

7.6 Intertenancy construction that incorporates fire resistance and noise control must be protected from water splash. In shower areas, GIB® Wet Area plasterboards must not be substituted for other GIB® plasterboards but must be an extra lining layer. Refer to the Technical Literature.

Tiling

7.7 GIB® Wet Area Systems are suitable as a substrate for tiling up to the following weights:

- 10 mm GIB Aqualine® and GIB Weatherline® - up to 26 kg/m^2.
- 13 mm GIB Aqualine®, GIB Toughline® Aqua and GIB Weatherline® - up to 40 kg/m^2.

[Note: Most ceramic and porcelain wall tiles weigh less than 20 kg/m^2. For further information on tiling consult the BRANZ Good Practice Guide – Tiling.]

Framing

7.8 Supporting framing must comprise one of the following, subject to the minimum sizes, dwang centres and all other frame requirements of GIB® Wet Area Systems Technical Literature:

- Timber framing must be designed and constructed in accordance with NZS 3604, or to a specific design using NZS 3603 and AS/NZS 1170. Refer to Paragraph 15.2 regarding recommended moisture content of timber framing.
- Steel framing must be designed and constructed in accordance with NASH Standard Part 2, or to a specific design in accordance with AS/NZS 1170.

Structure

Bracing

8.1 GIB Aqualine®, GIB Toughline® Aqua and GIB Weatherline®can be used in GIB EzyBrace® Systems. Refer to BRANZ Appraisals Nos. 928 [2016] and 1048 [2019].

8.2 GIB Wet Area Systems must not be used for bracing in shower areas or behind baths.

Impact Resistance

8.3 GIB® plasterboards provide adequate resistance to soft body impact, based upon experience of use in domestic and light commercial applications. GIB Toughline® Aqua is recommended by Winstone Wallboards Ltd where higher impact resistance is desired.

Readers are advised to check the validity of this Appraisal by referring to the Valid Appraisals listing on the BRANZ website, or by contacting BRANZ.

KDC - Approved Building Consent Document - BC210208 - Pg 188 of 197 - 2/07/2021 - ComplyNZ

Durability

Serviceable Life

9.1 GIB® Wet Area Systems have a serviceable life of at least 15 years as a fully protected shower or water splash lining. As a general wall and ceiling lining, GIB® Wet Area Systems will have a serviceable life in excess of 50 years. The ability of GIB® plasterboards to remain durable is dependent on being protected and remaining dry in service, and being maintained in accordance with this Appraisal.

Maintenance

9.2 The building must be maintained weathertight and all lining systems protected from internal and external moisture.

9.3 Finishes to water splash and shower areas, including tiles, grout, waterproof membranes, sealants and flexible sheet vinyl must be checked to ensure the integrity of the system is maintained. They must be repaired or replaced if necessary. When repairing or replacing finishes, the GIB® plasterboard substrate must be checked for defects and repaired or replaced, as required.

9.4 For flexible sheet vinyl, particular attention must be paid to joints, especially at corners. Checks should be made to ensure the vinyl has not been punctured. Where damage has occurred, repairs must be made immediately.

9.5 Impact damage to GIB® plasterboard, resulting in small holes and cracks, may be patched, stopped and finished. For larger areas of damage, expert advice on repair must be sought from Winstone Wallboards Ltd.

Prevention of Fire Occurring

10.1 Separation or protection must be provided to the GIB® Wet Area Systems from heat sources such as fireplaces, heating appliances, flues and chimneys. Part 7 of NZBC Acceptable Solutions C/AS1 and C/AS2, and NZBC Verification Method C/VM1 provide methods for separation and protection of combustible materials from heat sources.

Fire Affecting Areas Beyond the Fire Source

Control of Internal Fire and Smoke Spread

11.1 The gypsum plasterboard used in GIB® Wet Area Systems without an applied paint or wallpaper finish has been tested in accordance with ISO 5660 and achieved a Material Group Number of 1-S.

11.2 The gypsum plasterboard used in GIB® Wet Area Systems with an untested applied finish of a waterborne or solvent borne paint coating ≤ 0.4mm thick achieves a Material Group Number of G2-S in accordance with Table A1 of NZBC Verification Method C/VM2.

11.3 A lower Material Group Number may be achieved when used with a tested finishing system. The Material Group Number for the complete lining system must be obtained from the supplier of the finish product or system.

Fire Resistance Ratings (FRRs)

11.4 GIB® Wet Area plasterboards, when used as part of GIB® Fire Rated Systems, can be used to provide FRRs as determined by NZBC Acceptable Solutions C/AS1 and C/AS2 and NZBC Verification Method C/VM2. Refer to BRANZ Appraisal No. 289 (2018) and relevant technical literature.

Internal Moisture

12.1 When installed in accordance with this Appraisal, GIB® Wet Area Systems will provide wall surfaces adjacent to sanitary fixtures and sanitary appliances that are impervious and easily cleaned.

12.2 The construction methods in the Technical Literature meet with the internal moisture requirements of the NZBC Acceptable Solution E3/AS1.

12.3 To minimise internal condensation, adequate levels of ventilation and thermal resistance must be provided to all spaces where moisture may be generated.

Readers are advised to check the validity of this Appraisal by referring to the Valid Appraisals listing on the BRANZ website, or by contacting BRANZ.

KDC - Approved Building Consent Document - BC210208 - Pg 189 of 197 - 2/07/2021 - ComplyNZ

Airborne and Impact Sound

13.1 GIB® Wet Area plasterboards, when used as part of GIB® Noise Control systems, can be used to provide acoustic ratings as required by NZBC Acceptable Solution G6/AS1. Refer to BRANZ Appraisal No. 394 (2017) and relevant technical literature.

Installation Information

Installation Skill Level Requirement

14.1 Installation of GIB® Wet Area Systems must be completed by, or under the supervision of, a Licensed Building Practitioner with the relevant Licence Class, in accordance with the Technical Literature and this Appraisal.

General

15.1 GIB® Wet Area Systems must be installed in accordance with the Technical Literature. For inspection, reference must be made to the Technical Literature.

Framing

15.2 To achieve an acceptable decorative finish, the walls must not be lined unless the moisture content of timber framing is less than 18%. Winstone Wallboards Ltd recommend a moisture content of 8–12% where buildings are to be air conditioned or centrally heated.

Cutting

15.3 GIB® Wet Area plasterboards are easily cut by scoring the face paper with a sharp short-bladed trimming knife, and then snapping the plasterboard away from the cut face and cutting the back paper or by sawing. Use of a metal straightedge facilitates clean straight cuts. Cut edges can be tidied up by using a knife. Paper dags should be removed.

Fixing Sheets

Non-Tiled Areas

16.1 GIB® Wet Area plasterboards may be installed vertically or horizontally. Sheets are fixed with GIB® Grabber® screws at 300 mm centres around the perimeter of the sheet, and with GIBFix® adhesive on all intermediate studs and dwangs. Adhesive must not be used under fasteners. A 5-10 mm gap must be left between the floor and the bottom of the sheet.

Tiled Areas

16.2 Control joints must be provided at maximum 4 m centres.

16.3 Internal corners in shower areas must be reinforced with a minimum 32 x 32 x 0.55 mm galvanised metal angle (i.e. GIBFix® Angle or GIB® Rondo® NZ18) prior to lining the walls.

16.4 GIB® Wet Area plasterboards may be installed vertically or horizontally. Sheets are fixed with GIB® Grabber® screws at 150 mm centres to the perimeter of wall and to all intermediate studs. Adhesive must not be used in place of screws.

Ceilings

16.5 Supports of timber or steel battens or ceiling joists must be 450 mm centres for 10 mm GIB Aqualine®, or 600 mm centres for 13 mm GIB Aqualine® or GIB Toughline® Aqua.

16.6 GIB Aqualine® and GIB Toughline® Aqua sheets must be fixed with GIB® Grabber® screws at 600 mm centres around the perimeter of the ceiling and at 200 mm centre along supports. Alternatively, sheets are screw fixed at 600 mm centres along the supports and GIBFix® adhesive placed at 200 mm centres between the screws.

Readers are advised to check the validity of this Appraisal by referring to the Valid Appraisals listing on the BRANZ website, or by contacting BRANZ.

KDC - Approved Building Consent Document - BC210208 - Pg 190 of 197 - 2/07/2021 - ComplyNZ

Penetrations and Sealants

17.1 All cut-outs for pipe penetrations must be made neatly using a hole saw. Cut-outs should be made approximately 12 mm diameter greater than the pipe.

17.2 A bead of sealant must be placed to the full thickness of the plasterboard sheet around all pipe penetrations, at bath rims and preformed shower bases and where an impervious junction is required at the floor/wall line.

17.3 In tiled areas, a bead of sealant 6 mm wide must also be placed to the full thickness of the tiles where the above situation occurs. The sealant manufacturer's technical literature must be followed for installation.

Jointing and Finishing

18.1 Jointing must be carried out in accordance with GIB® Site Guide Technical Literature.

18.2 Tiled shower areas must incorporate a waterproofing membrane over GIB® Wet Area Systems. Waterproofing membranes are outside the scope of this Appraisal and must otherwise be specified and approved.

Health and Safety

19.1 Dust resulting from the sanding of stopping and finishing compounds may be a respiratory irritant, and the use of a suitable facemask is recommended.

Basis of Appraisal

The following is a summary of the technical investigations carried out:

Tests

20.1 Winstone Wallboards Ltd GIB® plasterboards have been assessed for the following properties: MOR, MOE, paper tensile strength, paper shear strength, nail pull resistance, edge hardness, water resistance, hard and soft body impact tests and humidified deflection.

20.2 Cone calorimeter tests to ISO 5660 have been carried out by BRANZ.

Other Investigations

21.1 An assessment was made of the durability of the systems by BRANZ technical experts and found to be satisfactory.

21.2 Site inspections were carried out by BRANZ to assess the practicability of the installation of the systems, and to view completed installations.

21.3 The GIB® Wet Area Systems and GIB® Site Guide Technical Literature have been examined by BRANZ and found to be satisfactory.

Quality

22.1 Winstone Wallboards Ltd's manufacturing process and details of the quality and composition of the materials, have been examined by BRANZ and found to be satisfactory.

22.2 The quality management systems of Winstone Wallboards Ltd have been assessed and registered by TELARC as meeting the requirements of ISO 9001: 2015, Registration No. 581.

22.3 Winstone Wallboards Ltd is responsible for the quality of the product supplied.

22.4 The quality of the application and finish on site is the responsibility of the installation, stopping and finishing contractors.

22.5 Designers are responsible for the design of buildings.

22.6 Building owners are responsible for the maintenance in accordance with the instructions of Winstone Wallboards Ltd.

Readers are advised to check the validity of this Appraisal by referring to the Valid Appraisals listing on the BRANZ website, or by contacting BRANZ.

KDC - Approved Building Consent Document - BC210208 - Pg 191 of 197 - 2/07/2021 - ComplyNZ

Sources of Information

- AS/NZS 1170: 2002 Structural design actions - General principles.
- AS/NZS 2588: 2018 Gypsum plasterboard.
- BRANZ Good Practice Guide: Tiling (3rd edition), April 2015.
- ISO 5660-1:2002 Reaction-to-fire tests - Heat release, smoke production and mass loss rate - Part 1: Heat release rate (cone calorimeter method).
- NZS 3603: 1993 Timber Structures Standard.
- NZS 3604: 2011 Timber-framed buildings.
- Ministry of Business, Innovation and Employment Record of Amendments - Acceptable Solutions, Verification Methods and handbooks.
- The Building Regulations 1992.

Readers are advised to check the validity of this Appraisal by referring to the Valid Appraisals listing on the BRANZ website, or by contacting BRANZ.

KDC - Approved Building Consent Document - BC210208 - Pg 192 of 197 - 2/07/2021 - ComplyNZ

In the opinion of BRANZ, GIB® Wet Area Systems are fit for purpose and will comply with the Building Code to the extent specified in this Appraisal provided they are used, designed, installed and maintained as set out in this Appraisal.

The Appraisal is issued only to Winstone Wallboards Ltd, and is valid until further notice, subject to the Conditions of Appraisal.

Conditions of Appraisal

1. This Appraisal:
   a) relates only to the product as described herein;
   b) must be read, considered and used in full together with the Technical Literature;
   c) does not address any Legislation, Regulations, Codes or Standards, not specifically named herein;
   d) is copyright of BRANZ.
2. Winstone Wallboards Ltd:
   a) continues to have the product reviewed by BRANZ;
   b) shall notify BRANZ of any changes in product specification or quality assurance measures prior to the product being marketed;
   c) abides by the BRANZ Appraisals Services Terms and Conditions;
   d) warrants that the product and the manufacturing process for the product are maintained at or above the standards, levels and quality assessed and found satisfactory by BRANZ pursuant to BRANZ's Appraisal of the product.
3. BRANZ makes no representation or warranty as to:
   a) the nature of individual examples of, batches of, or individual installations of the product, including methods and workmanship;
   b) the presence or absence of any patent or similar rights subsisting in the product or any other product;
   c) any guarantee or warranty offered by Winstone Wallboards Ltd.
4. Any reference in this Appraisal to any other publication shall be read as a reference to the version of the publication specified in this Appraisal.
5. BRANZ provides no certification, guarantee, indemnity or warranty, to Winstone Wallboards Ltd or any third party.

For BRANZ

Chelydra Percy
Chief Executive

Date of Issue:
15 February 2021

Readers are advised to check the validity of this Appraisal by referring to the Valid Appraisals listing on the BRANZ website, or by contacting BRANZ.

KDC - Approved Building Consent Document - BC210208 - Pg 193 of 197 - 2/07/2021 - ComplyNZ

eone SEWER SYSTEMS

OVER 10,000 INSTALLATIONS NATIONWIDE

KDC - Approved Building Consent Document - BC210206 - Pg 194 of 197 - 2/07/2021 - ComplyNZ

ABOUT ECOFLOW

Ecoflow is New Zealand's largest pressurised sewer supplier. Founded in 2007 by two wastewater engineers, with their goal to become New Zealand's leading pressurised sewer system specialist.

We are proud distributors of the Environment One (E/One) system, E/One are world leaders in low pressure sewer systems having over 600,000 grinder pumps operating globally in 42 countries.

Ecoflow have installed over 10,000 E/One pressure sewer systems throughout New Zealand in both council projects as well as green-field subdivisions.

Our success is simple, we are the most knowledgeable in our field using market leading equipment. We are focused on building strong relationships with our clients offering exceptional service and support.

WHY COUNCILS AND DEVELOPERS ARE CHOOSING E/ONE PRESSURE SEWER SYSTEMS

- Better for New Zealand's environment
- Minimal impact on councils existing sewer networks
- Ideal alternative to deep gravity sewer mains
- More resilient to seismic activity – earth quakes.
- Eliminates large public sewer pump stations

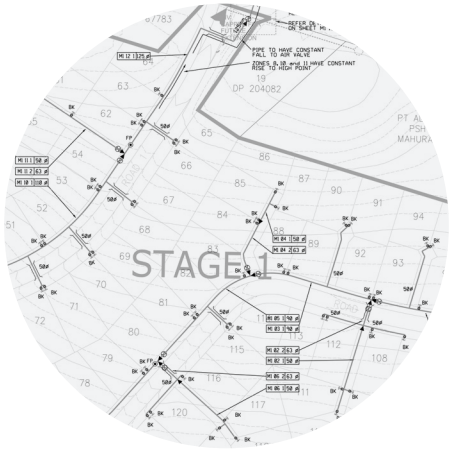

ecoflow
Pressure Sewer Specialists

RESPONSIBLE FOR 95% OF NZ'S PRESSURE SEWER SYSTEMS

KDC - Approved Building Consent Document - BC210208 - Pg 195 of 197 - 2/07/2021 - ComplyNZ

E/ONE QUALITY

For over 50 years the E/One name is synonymous with reliable, maintenance free grinder pump systems, designed with longevity in mind. Before a product is released it is subjected to meticulous performance tests. The heavy duty cast iron grinder pump is ANSI/NFS 46 Certified. It's an industrial grade pump for residential use. E/One's tank is manufactured in New Zealand and is designed and certified to AS/NZS1546 specifications. It features an integrated stainless steel ball valve with pressure relief.

SERVICE CAPABILITIES

Ecoflow is known for offering end-to-end service. We have close relationships with architects, housing companies, builders, plumbers, drain layers and electricians to achieve a superior level of customer service.

SERVICES INCLUDE:

- Network Design
- Project Management
- Supply of Quality E/One Equipment
- On-Site Delivery
- On-site Installation Training – Approved Drain layers
- Pump Installation and Commissioning
- Supply of Warranty/Consent Documentation
- On-going 24/7 Service

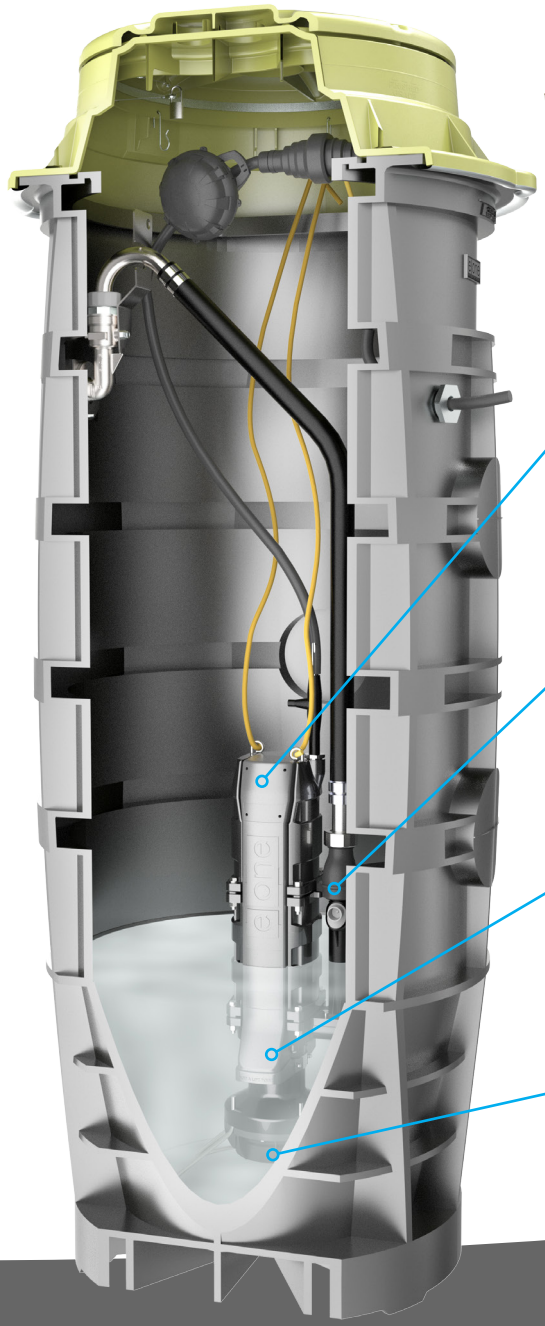

E/ONE ALARM PANEL

To maximise reliability and convenience, the E/One installation includes an IP65 weather proof alarm panel which also protects the pump from low voltage, running dry, and over pressure situations.

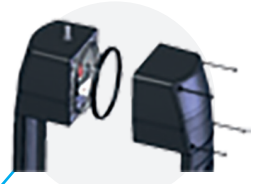

PRESSURE SWITCH HOUSING

Pressure switches in the head of the pump for starting and stopping are similar to washing machine controls, eliminating the need for float switches which commonly fail due to fats, hair and rags.

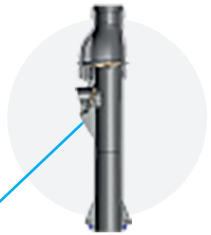

INTEGRATED VALVES

The integral non-return valve protects against system back pressure and the anti-siphon valve facilitates downhill pumping applications.

PROGRESSING CAVITY PUMP

This deceptively simple design produces a nearly constant flow under a wide range of continuously varying conditions.

GRINDER WHEEL AND SHREDDER RING

Hardened forged alloy steel cutter bars and teeth create a shearing action coupled with the high torque pump to help eliminate blockages.

- Environmentally friendly
- No preventative maintenance
- Unobtrusive, low profile installation
- Extremely low noise and odour levels
- 24 Hour emergency storage capacity
- Low power consumption $20 to $30 per annum

KRC - Approved Building Consent Document - BC210208 - Pg 196 of 197 - 2/07/2021 - ComplyNZ

NEW ZEALAND'S LEADER IN PRESSURE SEWER

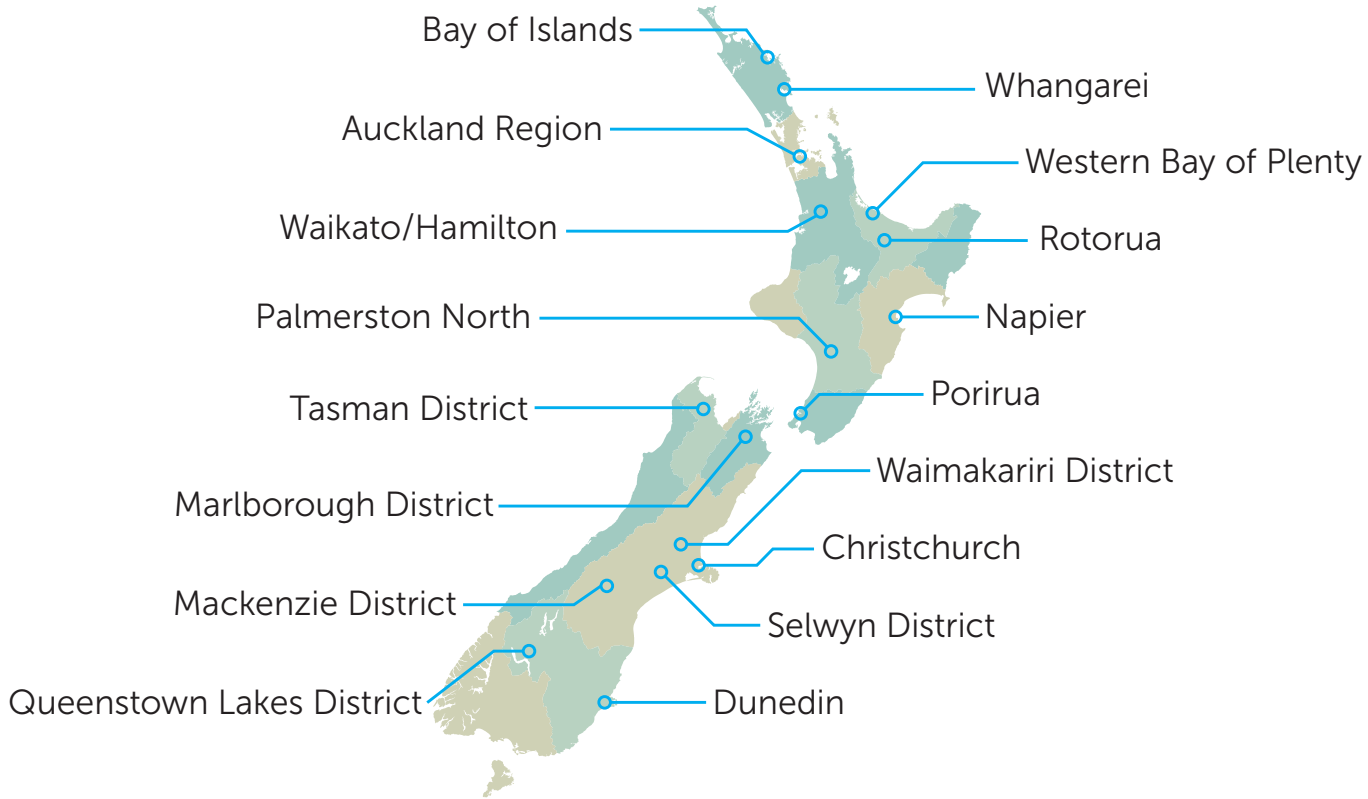

10,000 NEW ZEALAND INSTALLATIONS

2 YEAR WARRANTY

24 SEVEN SERVICE LINE

ecoflow
Pressure Sewer Specialists

AUCKLAND (HEAD OFFICE)
16 Piermark Drive, Albany, Auckland
PO Box 300 249, Albany, Auckland 0752
Phone: 09 447 1793

CHRISTCHURCH
15 Anchorage Road,
South Hornby, Christchurch 8042
Phone: 03 349 2506

Email: info@ecoflow.co.nz
Website: www.ecoflow.co.nz
24/hr Service: 0508 528 3725

PRESSURE SEWER SYSTEMS

SYSTEMS

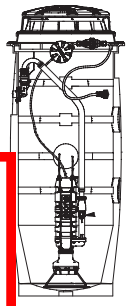

E/One Simplex 2010iP - single pump
designed for residential market
Standard storage/flows

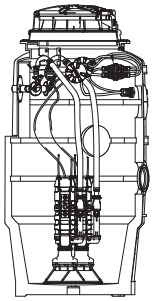

E/One Duplex 2014iP - dual pump
designed for commercial or industrial areas
Greater storage/flows

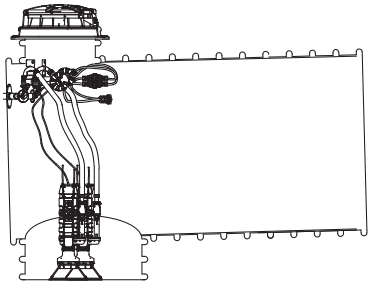

Custom - multiple pump systems
designed for commercial or industrial areas
Custom design storage/flows

TANK SPECS

Simplex 2010iP	
Diameter (mm)	815
Height (mm)	2130
Weight (kg)	74
Total Capacity (L)	718

Duplex 2014iP	
Diameter (mm)	1140
Height (mm)	2030
Weight (kg)	132
Total Capacity (L)	1337

Custom Tank
Ecoflow can design a system solution that meets your storage/flow rate needs

CONSTRUCTION

E/Ones tanks are a purpose built 'wetwell' design made of high quality polyethylene (PE), a material that's fit for purpose. The E/One tanks have been certified to AS/NZS 1546.1:2008 and have been tested to twice the hydrostatic load required. Simply put, these are the most robust tanks on the market. Ecoflow also supply riser necks where deeper invert levels are required.

OTHER E/ONE FEATURES INCLUDE

- Small 600mm Lid Rated to 510kg
- Integrated 'Stainless Steel' Isolation Valve
- Tapered Sump to Reduce Retained Volume
- Integrated Ballast Flange
- Factory Assembled and Tested to Ensure Water Tightness

PUMP

E/One Extreme - Grinder Pump

The E/One Extreme grinder pump is the only purpose built grinder pump for pressure sewer systems. The unique larger diameter, low velocity, high torque grinder makes light work of solids and never requires sharpening. The vertical rotor progressive cavity pump generates the pressure to overcome the challenges of flat or hilly terrain. The pump rotor is through-hardened stainless steel while the pump stator is a proprietary compounded synthetic elastomer designed for the sewerage application and offers market leading wear resistance. The pump housing castings are fully epoxy coated to resist corrosion and designed to last for decades.

Motor Type	Single Phase, 240V, 50Hz, 0.75kW
Standards	NSF46, AS/NZS 60335.2.41:2004
Design Head	56m
Pump Flow	0.4l/s @ 55m TDH 0.75l/s @ 1m TDH
Speed	1450 rpm
Start Currant	26.4 Amps
Starting Torque	15.6 Nm
Check Valve	Swing Check Valve
Anti-siphon Valve	Integral anti-siphon/Check Valve

CONTROL PANELS

E/One Simplex/Duplex Protect Plus Panel

Alarm/Monitor panel. The Sentry Protect Plus panel monitors for the following operating conditions:

1. Pump Run Dry Condition – Pump running continuously
2. Pump Overpressure Condition – Pump operating at abnormally high wattage level
3. Brownout Condition
4. Overvoltage Condition – Mains voltage above 12% of nameplate rating
5. High Level Alarm Condition
6. Real time pump performance on LED screen

Note: 'Duplex Alternating Pump Duration' - This field allows selecting the time-based alternating pump duration mode. The default setting for this option is 24 hours.

OneBox® Panel

The OneBox® telemetry system gives complete control of your fleet of pressure sewer pumps from your office desktop or smartphone. Improve your customer service, identify issues as they arise, and dramatically improve waste water efficiency.

With OneBox® you can:

1. Monitor and control individual sewer pumps in real-time, remotely
2. Receive email/txt notifications even before the customer becomes aware of any issue
3. Analyse trends, generate reports and determine your peak flow demand
4. Optimise maintenance response
5. Smooth out peak flows and maximise capacity & performance of the downstream infrastracture
6. Real-time information at your finger tips.

KDC - Approved Building Consent Document - BC210208 - Pg 197 of 197 - 2/07/2021 - ComplyNZ

ecoflow
Pressure Sewer Specialists

AUCKLAND (HEAD OFFICE)
16 Piermark Drive, Albany, Auckland
PO Box 300 249, Albany, Auckland 0752
Phone: 09 447 1793

CHRISTCHURCH
15 Anchorage Road,
South Hornby, Christchurch 8042
Phone: 03 349 2506

Email: info@ecoflow.co.nz
Website: www.ecoflow.co.nz
24/hr Service: 0508 528 3725

Thursday, November 26, 2020

KDC - Approved Building Consent Document - BC210208 - Pg 1 of 114 - 2/07/2021 - ComplyNZ

The Building Department

TO WHOM IT MAY CONCERN

Dear Sir/Madam,

Re: Construction of Dwelling at Lot 8, TBA Sampsons Way, Dargaville
Job: nz22-390076

Please direct all correspondence - applications, plans, etc., relating to the construction of our dwelling, to our builder - Sudfelt Construction Limited on 094375666. Their address is 14 Percy St, Kensington, WHANGAREI, 0112.

Yours sincerely,

Rachel & Regan
PROPRIETOR(S)

MEMORANDUM FROM LICENSED BUILDING PRACTITIONER: CERTIFICATE OF DESIGN WORK (Form 2A)

Section 30C or 45, Building Act 2004.

KDC - Approved Building Consent Document - BC210208 - Pg 2 of 114 - 2/07/2021 - ComplyNZ

1. Where is the building? *Complete all fields*

Street address of building:	Lot 8, Sampsons Way Dargaville - Kaipara
Building consent number:	

2. Who owns the building? *Complete all fields, using N/A where not applicable*

Owner name:	Rachel Edge & Regan Randell	Title: e.g. Mr, Mrs, Ms, Dr	
Owner email address:	whangarei@gjgardner.co.nz		
Owner contact numbers:	Ph: (09) 437 5666	Cell:	
Owner mailing address:	14 Percy Street Kensington - WHANGAREI		

3. What work have you carried out / supervised? *Complete as appropriate*

I carried out/supervised the following design work that is restricted building work:

	Design Work that is restricted building work *Tick as applicable or enter N/A*				Description of restricted building work	Carried out / supervised	Reference to plans / specifications
					Complete these fields if the previous column is ticked		
Primary structure	✔	Yes		No			
Foundations / subfloor framing		Yes	✔	No	Ribraft slab	Engineered	Engineering
Walls	✔	Yes		No	Timber framing	Carried Out	Sections
Roof	✔	Yes		No	Truss framing	Supervised	Roof Plan
Columns / beams		Yes	✔	No	-	-	-
Bracing	✔	Yes		No	Gib bracing system	Carried Out	Bracing Plan
Other		Yes	✔	No	-	-	-
External moisture management systems	✔	Yes		No			
Damp proofing	✔	Yes		No	DPC to u/s of plate	Carried Out	Details
Roof cladding or roof cladding system	✔	Yes		No	Metal tiling	Carried Out	Details
Ventilation system (for example, subfloor or cavity)	✔	Yes		No	Cavity system to wall claddings	Carried Out	Details
Wall cladding or wall cladding system	✔	Yes		No	Brick Veneer	Carried Out	Details
Waterproofing		Yes	✔	No	-	-	-
Other		Yes	✔	No	-	-	-
Fire safety systems		Yes	✔	No	-	-	-

Emergency warning systems, evacuation and fire service operation systems, suppression, control systems, or other	☐	Yes	☑	No	-	-	-

Note: The design of fire safety systems is only restricted building work when it involves small-to-medium apartment buildings as defined by the Building (Definition of Restricted Building Work) Order 2011.

Are waivers or modifications of the building code required?	☐	Yes	☑	No

If Yes, please provide details including relevant code clauses

Clause:	Waiver/modification required:
-	-

4. What are your details? *Complete all fields or enter N/A where not applicable*

Licensed Building Practitioner name:	Conrad Lienert	Licensed Building Practitioner number:	BP113635
Registered Architect number:	-	Chartered Professional Engineer number:	-
Mailing address:	133, Mangaroa Valley Road. Upper Hutt. - WELLINGTON -		
Street address or registered office:	133, Mangaroa Valley Road. Upper Hutt. - WELLINGTON -		
Contact numbers:	Ph:-	Cell:	021 499 203
Email address:	conrad_lienert_design@hotmail.com		

5. Declaration

I Conrad Lienert [*name of Licensed Building Practitioner*], certify that the design work that is restricted building work recorded on this form—

(a) complies with the building code; or

(b) complies with the building code subject to any waiver or modification of the building code recorded on this form.

Signature:	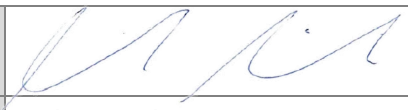
Date:	24th March 2021

You can add a digital signature to this document, either using Adobe or your existing digital signature.

Once you have filled out the form, including signatures, please save the application to your computer. You can then submit the application with supporting documentation to your local council.

If you are unsure about what information to include in your application, a guidance document is available (click here).

KDC - Approved Building Consent Document - BC210208 - Pg 3 of 114 - 2/07/2021 - ComplyNZ

KDC - Approved Building Consent Document - BC210208 - Pg 4 of 114 - 2/07/2021 - ComplyNZ

MEMORANDUM OF DESIGN OF RESTRICTED BUILDING WORK FROM LICENSED BUILDING PRACTIONER (LBP)

The Building: New Dwelling – Sampsons Way, Dargaville – Lot 8 DP 542244

The Owner: Rachyl Edge & Regan Randell

LBP: Steven Turner, CPEng Reg No.87465, for RS Eng Ltd, email: steve@RSEng.co.nz Phone 09 438 3273

Practice Area: Structural, Civil, Site Assessment of Natural Hazards

Design Legal Entity: RS Eng Ltd, 2 Seaview Road Whangarei 0110, Phone 09 438 3273

Identification of design work that is Restricted Building Work

Description of Restricted Building Work	BC Clause	Means of compliance	Reliance on other LBPs	Reliance on Proprietary Elements	Waiver
Structural calculations as outlined in calculations. Job Ref. #17644	B1	NZ standards: AS/NZS 1170, NZS 3603, NZS 3604		Firth RibRaft data MiTek data	

Accompanying Documents

Drawing Register	☐	Specifications	☐	PS 1	☑	
Drawings	☑	Design Report	☐	PS 2	☐	By ……..……..
Calculations	☑	Geotechnical Report	☐	Other	☐	

Declaration

I, Steven Turner for RS Eng Ltd, LBP state that I have applied the skill and care reasonably required of a competent design professional in carrying out or supervising the Restricted Building Work described on this form and that based on this I also state that the RBW:
(a) complies with the Building Code clauses identified on this form; or
(b) complies with the Building Code subject to any waiver or modification of the Building Code recorded on this form.

Signature: Date: 29 March 2021

Note: This form is consistent with clause 45(a) of the Building Act 2004. The form shall only be used for residential projects less than 10 metres high.

KDC - Approved Building Consent Document - BC210208 - Pg 5 of 114 - 2/07/2021 - ComplyNZ

Hawthorn Geddes
engineers & architects ltd

In reply please quote: 11546

27 August 2018

Sampson Family Trust
todd@hummingbirdconstruction.co.nz
Attention: Todd Sampson

cc Mark Benjamin
markb@mhg.co.nz

GEOTECHNICAL INVESTIGATION REPORT FOR PROPOSED SUBDIVISION OF LOT 1 DP 111509 PHOENIX PLACE, DARGAVILLE

Purpose

The purpose of this report is to provide a summary of the geotechnical investigation completed at the above property for a proposed subdivision. Advice is given on stability and soil conditions for foundation design.

This report is suitable for supporting a subdivision consent application.

Proposal

It is proposed to subdivide the above property into 23 Lots, all similar in size between 600m² and 758m².

Access is directly off Phoenix Place with a vested road running from the north-east to the south-west along the centre of the property as shown on the plan attached.

There is Kaipara District Council wastewater and water connection to all Lots.

Site Description

The site is on flat ground, almost rectangular in shape and 1.89 ha in size.

The property has reeds on the surface consistent with surface water ponding.

There are open drains up to 600mm wide and up to 900mm deep within part of the southeast boundary and along the eastern boundary of the site. There is a stormwater drainage pond to the south-west of the site.

KDC - Approved Building Consent Document - BC210208 - Pg 6 of 114 - 2/07/2021 - ComplyNZ

Geological Setting

The online Geology Web Map of the Institute of Geological & Nuclear Sciences describes the area as indicates the site geology is *Early Pleistocene - Middle Pleistocene undifferentiated estuary, river and swamp deposits consisting of "Partly consolidated mud, sand, gravel and peat or lignite of alluvial, colluvial, lacustrine, swamp and estuarine origins".*

The soil encountered in our investigation was consistent with the description above.

Visible Stability

The site house sites are on essentially level ground. No instability was observed.

Soil Investigation

The soil investigation consisted of ten hand augered boreholes drilled to depths of 0.9m and 2.4m. Shear vane testing was undertaken at nominal 0.5m intervals as the holes were drilled and Scala penetrometer testing at the base of all boreholes. Hand auger locations are shown on the attached site plan.

The soils encountered in all boreholes were similar except in HA10, where we encountered peat below the topsoil layer to 0.5m depth. The remaining hand augers encountered topsoil up to 300mm thick overlying hard pan sand-silt layer typically less than 300mm thick. Below this is highly plastic clay to the end of the boreholes between 0.9m and 2.4m.

Whilst performing our hand augers we encountered water perched above the impermeable hard pan layer. Groundwater was encountered below the hard pan at between 0.5m and 0.8m below ground level.

The soil was squeezing at around 0.9m as the boreholes were advanced to 1.5m closing the hole at 0.9m. Scala penetrometer results at the base of the hand augers between 0-1 blow per 100mm are associated with the holes squeezing closed.

Scala penetrometer results were typically 2 blows to 3 blows per 100mm penetrations, with results increasing with depth.

Shear vane results in the hard pan sandy silt were greater than 96kPa. In the clay below the shear vane results were between 41kPa and 120kpa.

KDC - Approved Building Consent Document - BC210208 - Pg 7 of 114 - 2/07/2021 - ComplyNZ

Stability

The site is on essentially flat ground. We did not observe any instability.

Earthworks to construct building platforms will involve little more than stripping topsoil and/or peat.

Therefore in terms of Section 106 of the Resource Management Act, we consider that;

(a) the land in respect of which a consent is sought, or any structure on the land, is not and is not likely to be subject to material damage by erosion, falling debris or slippage, from any source; and

(b) any subsequent use that is likely to be made of the land is not likely to accelerate, worsen, or result in material damage to the land, other land, or structure by erosion, falling debris or slippage from any source; and,

(c) sufficient provision has been made for legal and physical access to each allotment to be created by the subdivision.

Ground Conditions for Foundations

Soils encountered in the boreholes are consistent with good ground as described in NZS 3604. The hard pan silt is not expansive soil. We consider the ground conditions are suitable for shallow foundations sized in accordance with NZS 3604.

For all Lots we recommend removal of all topsoil and organic soils down to the hard pan. The excavation shall be backfilled with compacted clean GAP40 hardfill. To reduce settlement we recommend a maximum of 0.5m of fill on the new Lots. The proposed dwellings on all Lots shall be limited to a single-storey, timber-framed construction.

Rib-raft floor slabs are not suitable due to groundwater encountered at less than 0.6m (the Firth Rib-raft technical document section 3.5 states that a Rib-raft floor shall not be used on damp sites where the expected ground water level could be 0.6m to the underside of the system).

Stormwater

During our investigation, surface water ponding and an impermeable hard pan underlying the topsoil was encountered. We recommend runoff from houses and impervious surfaces is discharged to proposed stormwater reticulation.

KDC - Approved Building Consent Document - BC210208 - Pg 8 of 114 - 2/07/2021 - ComplyNZ

Limitation

Recommendations and opinions in this report are based on data from the investigation described herein. The nature and continuity of subsoil conditions away from the boreholes is inferred and it is possible that actual conditions could vary from those assumed. Should subsoil conditions vary from those described in this report, it is essential that Hawthorn Geddes engineers and architects ltd be contacted to confirm the applicability of the recommendations.

This report has been prepared solely for the benefit of our client Todd Sampson and the Kaipara District Council in relation to the subdivision consent application for which this report has been prepared. The comments in it are limited to the purpose stated in this report. No liability is accepted by Hawthorn Geddes engineers & architects ltd in respect of its use by any other person, and any other person who relies upon any matter contained in this report does so entirely at their own risk.

Yours faithfully

Dean Botica
Hawthorn Geddes
engineers & architects ltd

Report prepared by: Tiana Epati

Encl: - Site Plan (1 x A3 page)
- Borehole Logs (10x A4 pages)

KDC - Approved Building Consent Document - BC210208 - Pg 9 of 114 - 2/07/2021 - ComplyNZ

Hawthorn Geddes engineers & architects ltd

LOG OF HAND AUGER

HA1

PAGE 1 OF 1

CLIENT Todd Sampson
PROJECT Sampson Family Trust - Geo Phoenix Place, Dargaville
PROJECT NUMBER 11546
PROJECT LOCATION Phoenix Place, Dargaville
START DATE 16/08/18 COMPLETED DATE 16/08/18
COORDINATES LEVEL 0.00
DRILLING CONTRACTOR HGEA
DRILLING METHOD 50mm Hand auger
LOGGED BY AM
HOLE LOCATION Lot 1/Lot 2

DEPTH (m)	SCALA (Blows / 100mm)	TESTS	GRAPHIC LOG	MATERIAL DESCRIPTION	WATER	DEPTH (m)
0			TS	0.15 Topsoil mixture silt, brown, saturated, low plasticity (wet surface)		
		SV = UTP (GEO287)		Sandy SILT (ML); grey brown. Hard; low plasticity; moist; sand, fine to coarse.		
		SV = 80 / 62 kPa (GEO287)		0.60 0.5m: trace organics. Silty CLAY (CH); light grey. Stiff; high plasticity; moist.	16/08/2018	
1		SV = 61 / 34 kPa (GEO287)		0.9m: soil is squeezing at 0.9m could not advance hand auger		
	2			1.60 EOH: 1.60m		
2	2 4 4 4 5 5 6 6 7 7 8 9 10					
3						
4						

PHOTO / SKETCH

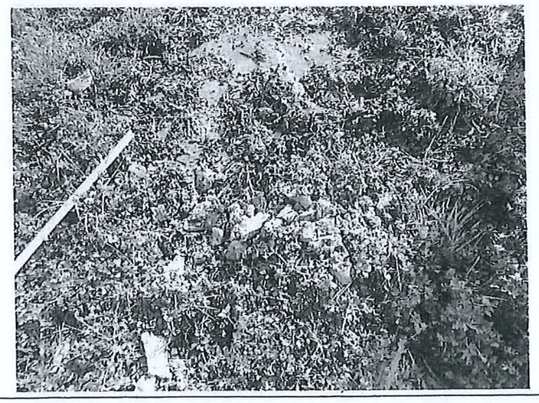

WATER OBSERVATIONS

Date / Time	Water Level (m)	Type	Remarks
16/08/2018 12:00:00 a.m.	0.60	Static Water Level	

REMARKS

SYMBOLS

- Standing Water Level
- Water Out flow
- Water In flow

Produced with Core-GS

KDC - Approved Building Consent Document - BC210208 - Pg 10 of 114 - 2/07/2021 - ComplyNZ

Hawthorn Geddes
engineers & architects ltd

LOG OF HAND AUGER

HA2

PAGE 1 OF 1

CLIENT Todd Sampson
PROJECT Sampson Family Trust - Geo Phoenix Place, Dargaville
PROJECT NUMBER 11546
PROJECT LOCATION Phoenix Place, Dargaville
START DATE 16/08/18 COMPLETED DATE 16/08/18
COORDINATES LEVEL 0.00
DRILLING CONTRACTOR HGEA
DRILLING METHOD 50mm Hand auge
LOGGED BY TE
HOLE LOCATION Lot 23

DEPTH (m)	SCALA (Blows / 100mm)	TESTS	GRAPHIC LOG	MATERIAL DESCRIPTION	WATER	DEPTH (m)
0			TS	Topsoil mixture, brown, wet, low plasticity.		
		SV = UTP (GEO952)		0.30 Sandy SILT (ML); light grey brown. Hard; low plasticity; moist; sand, fine to coarse.		
		SV = 120 / 22 kPa (GEO952)		0.60 CLAY (CH); light grey white. Stiff; moist.		
1		SV = 60 / 38 kPa (GEO952)		0.7m: trace pockets of organics rootlets brown. 0.9m: drilled down to 1.5m and attempted to hand auger but the soil was squeezing in and cannot progress hand auger.	16/08/2018	
	0	SV = 50 / 22 kPa (GEO952)		1.50 EOH: 1.50m		
	0	SV = 63 / 35 kPa (GEO952)				
	1					
	2					
2	2					
	3					
	2					
	3					
	3					
	5					
	4					
	6					
3	5					
	6					
	7					
	6					
	7					
	7					
4						

PHOTO / SKETCH

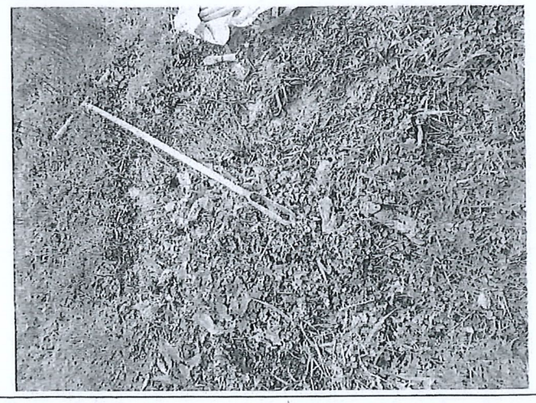

WATER OBSERVATIONS

Date / Time	Water Level (m)	Type	Remarks
16/08/2018 12:00:00 a.m.	0.85	Static Water Level	

REMARKS

SYMBOLS

- ▼ Standing Water Level
- ◁ Water Out flow
- ▷ Water In flow

Produced with Core-GS

KDC - Approved Building Consent Document - BC210208 - Pg 11 of 114 - 2/07/2021 - ComplyNZ

Hawthorn Geddes
engineers & architects ltd

LOG OF HAND AUGER

HA3
PAGE 1 OF 1

CLIENT Todd Sampson	PROJECT Sampson Family Trust - Geo Phoenix Place, Dargaville
PROJECT NUMBER 11546	PROJECT LOCATION Phoenix Place, Dargaville
START DATE 16/08/18 COMPLETED DATE 16/08/18	COORDINATES LEVEL 0.00
DRILLING CONTRACTOR HGEA	
DRILLING METHOD 50mm Hand auge	
LOGGED BY AM	
HOLE LOCATION Lot 4	

DEPTH (m)	SCALA (Blows / 100mm)	TESTS	GRAPHIC LOG	MATERIAL DESCRIPTION	WATER	DEPTH (m)
0	0 1 2 3 4 4 5 6 7 6 8 7 9 8 7 8 9	SV = 100 / 35 kPa (GEO287) SV = 78 / 38 kPa (GEO287) SV = 65 / 40 kPa (GEO287)	TS	0.15 Topsoil mixture silt, brown, saturated, low plasticity. Sandy SILT (ML), with trace clay; greyish brown. Stiff; high plasticity; moist; sand, fine to coarse. 0.60 Silty CLAY (CH), with some sand; light grey. Stiff; high plasticity; moist; sand, fine to medium. 0.90 0.7m EOH Scraping at 0.7m could not advance hand auger	16/08/2018	

PHOTO / SKETCH

WATER OBSERVATIONS

Date / Time	Water Level (m)	Type	Remarks
16/08/2018 12:00:00 a.m.	0.60	Static Water Level	

REMARKS

SYMBOLS
- Standing Water Level
- Water Out flow
- Water In flow

Produced with Core-GS

KDC - Approved Building Consent Document - BC210208 - Pg 12 of 114 - 2/07/2021 - ComplyNZ

Hawthorn Geddes
engineers & architects ltd

LOG OF HAND AUGER

HA4
PAGE 1 OF 1

CLIENT	Todd Sampson	PROJECT	Sampson Family Trust - Geo Phoenix Place, Dargaville
PROJECT NUMBER	11546	PROJECT LOCATION	Phoenix Place, Dargaville
START DATE	16/08/18	COMPLETED DATE	16/08/18
COORDINATES		LEVEL	0.00
DRILLING CONTRACTOR	HGEA		
DRILLING METHOD	50mm Hand auge		
LOGGED BY	TE		
HOLE LOCATION	Lot 20		

DEPTH (m)	SCALA (Blows / 100mm)	TESTS	GRAPHIC LOG	MATERIAL DESCRIPTION	WATER	DEPTH (m)
			TS	Topsoil mixture, brown, wet, low plasticity.		
				0.30	16/08/2018	
		SV = UTP (GEO952) SV = 66 / 19 kPa (GEO952)		Sandy SILT (ML); light grey brown. Hard; low plasticity; moist; sand, fine to coarse. 0.5m: trace organics trace dark brown		
				0.80	16/08/2018	
1	1 1 2 3 4 5 6 7 8 9 9 9 9 9 9 9	SV = 101 / 25 kPa (GEO952) SV = 66 / 35 kPa (GEO952)		CLAY (CH); light grey white. Stiff; high plasticity; moist. 1.10 0.8m: hard to auger in the clay EOH @ 1.10m 0.9m: soil is squeezing at 0.9m could not advance hand auger		
2						
3						
4						

PHOTO / SKETCH

WATER OBSERVATIONS

Date / Time	Water Level (m)	Type	Remarks
16/08/2018 12:00:00 a.m.	0.80	Static Water Level	
16/08/2018 12:00:00 a.m.	0.30	Inflow	water seeping in from the surface.

REMARKS

SYMBOLS

- Standing Water Level
- Water Out flow
- Water In flow

Produced with Core-GS

KDC - Approved Building Consent Document - BC210208 - Pg 13 of 114 - 2/07/2021 - ComplyNZ

Hawthorn Geddes
engineers & architects ltd

LOG OF HAND AUGER

HA5
PAGE 1 OF 1

CLIENT	Todd Sampson	PROJECT	Sampson Family Trust - Geo Phoenix Place, Dargaville
PROJECT NUMBER	11546	PROJECT LOCATION	Phoenix Place, Dargaville
START DATE	16/08/18	COMPLETED DATE	16/08/18
COORDINATES		LEVEL	0.00
DRILLING CONTRACTOR	HGEA		
DRILLING METHOD	50mm Hand auge		
LOGGED BY	AM		
HOLE LOCATION	Lot 6		

DEPTH (m)	SCALA (Blows / 100mm)	TESTS	GRAPHIC LOG	MATERIAL DESCRIPTION	WATER	DEPTH (m)
			TS	0.15 Topsoil mixture silt, brown, saturated, low plasticity.		
		SV = UTP (GEO287)		Sandy SILT (ML); light grey brown. Hard; low plasticity; moist; sand, fine to coarse.		
				0.70	16/08/2018	
		SV = 86 / 51 kPa (GEO287)		Silty CLAY (CH); light grey. Stiff; high plasticity; moist.		
		SV = 80 / 51 kPa (GEO287)		0.8m: soil is squeezing at 0.75m could not advance hand auger		
1	0			1.1m: soil has squeezed in and closed the hole.		
	1					
	1					
	2					
	3					
2	6					
	5					
	7					
	7					
	8					
	7					
	7					
	8					
3				1.50 EOH: 1.50m		
4						

PHOTO / SKETCH

WATER OBSERVATIONS

Date / Time	Water Level (m)	Type	Remarks
16/08/2018 12:00:00 a.m.	0.70	Static Water Level	

REMARKS

SYMBOLS

- Standing Water Level
- Water Out flow
- Water In flow

Produced with Core-GS

KDC - Approved Building Consent Document - BC210208 - Pg 14 of 114 - 2/07/2021 - ComplyNZ

Hawthorn Geddes
engineers & architects ltd

LOG OF HAND AUGER

HA6

PAGE 1 OF 1

CLIENT Todd Sampson	PROJECT Sampson Family Trust - Geo Phoenix Place, Dargaville
PROJECT NUMBER 11546	PROJECT LOCATION Phoenix Place, Dargaville
START DATE 16/08/18 COMPLETED DATE 16/08/18	COORDINATES LEVEL 0.00
DRILLING CONTRACTOR HGEA	
DRILLING METHOD 50mm Hand auge	
LOGGED BY TE	
HOLE LOCATION Lot 17	

DEPTH (m)	SCALA (Blows / 100mm)	TESTS	GRAPHIC LOG	MATERIAL DESCRIPTION	WATER	DEPTH (m)
	0 0 2 2 3 3 4 4 5 4 5 4 7 8 7 7 8 8 9 9	SV = UTP (GEO952)	TS	0.15 Topsoil mixture with silt, brown, wet, low plasticity. (very wet on the surface).	16/08/2018	
				Sandy SILT (ML); light grey brown. Hard; low plasticity; moist; sand, fine to coarse. 0.45		
		SV = 110 / 35 kPa (GEO952)		Silty CLAY (CH); light grey. Stiff; high plasticity; moist. 0.5m: trace fine rootlets orange brown		
				0.8m: soil is squeezing at 0.75m could not advance hand auger		
1		SV = 66 / 31 kPa (GEO952)		1.0m: white grey		
		SV = 72 / 38 kPa (GEO952)				
		SV = 66 / 31 kPa (GEO952)		1.8m: slight indent when poking the clay with finger		
2						
		SV = 41 / 19 kPa (GEO952)		2.40 EOH: 2.40m 2.4m: easy to poke finger into clay.		
3						
4						

PHOTO / SKETCH

WATER OBSERVATIONS

Date / Time	Water Level (m)	Type	Remarks
16/08/2018 12:00:00 a.m.	0.85	Static Water Level	

REMARKS

SYMBOLS

- Standing Water Level
- Water Out flow
- Water In flow

Produced with Core-GS

KDC - Approved Building Consent Document - BC210208 - Pg 15 of 114 - 2/07/2021 - ComplyNZ

Hawthorn Geddes
engineers & architects ltd

LOG OF HAND AUGER

HA7
PAGE 1 OF 1

CLIENT Todd Sampson
PROJECT Sampson Family Trust - Geo Phoenix Place, Dargaville
PROJECT NUMBER 11546
PROJECT LOCATION Phoenix Place, Dargaville
START DATE 16/08/18 COMPLETED DATE 16/08/18
COORDINATES LEVEL 0.00
DRILLING CONTRACTOR HGEA
DRILLING METHOD 50mm Hand auge
LOGGED BY AM
HOLE LOCATION Lot 8

DEPTH (m)	SCALA (Blows / 100mm)	TESTS	GRAPHIC LOG	MATERIAL DESCRIPTION	WATER	DEPTH (m)
			TS	0.15 Topsoil mixture silt, brown, wet, low plasticity. (water ponding on surface).		
		SV = 96 / 32 kPa (GEO287)		Sandy SILT (ML). Stiff; low plasticity; moist; sand, fine to coarse. 0.50		
		SV = 77 / 45 kPa (GEO287)		Silty CLAY (CH); light grey. Stiff; high plasticity; moist.	16/08/2018	
1	1 0 1 1 1 1 2 5 4 6 5 5 5 6			0.9m: soil is squeezing at 0.9m could not advance hand auger soil has squeezed the hole closed after advancing to 1.5m.		
				1.50 EOH: 1.50m		
2						
3						
4						

PHOTO / SKETCH

WATER OBSERVATIONS

Date / Time	Water Level (m)	Type	Remarks
16/08/2018 12:00:00 a.m.	0.60	Static Water Level	

REMARKS

SYMBOLS
- Standing Water Level
- Water Out flow
- Water In flow

Produced with Core-GS

KDC - Approved Building Consent Document - BC210208 - Pg 16 of 114 - 2/07/2021 - ComplyNZ

Hawthorn Geddes
engineers & architects ltd

LOG OF HAND AUGER

HA8
PAGE 1 OF 1

CLIENT Todd Sampson
PROJECT Sampson Family Trust - Geo Phoenix Place, Dargaville
PROJECT NUMBER 11546
PROJECT LOCATION Phoenix Place, Dargaville
START DATE 16/08/18 COMPLETED DATE 16/08/18
COORDINATES LEVEL 0.00
DRILLING CONTRACTOR HGEA
DRILLING METHOD 50mm Hand auge
LOGGED BY TE
HOLE LOCATION Lot 14/ Lot 15

DEPTH (m)	SCALA (Blows / 100mm)	TESTS	GRAPHIC LOG	MATERIAL DESCRIPTION	WATER	DEPTH (m)
			TS	Topsoil mixture silt, brown wet, low plasticity. (lots of surface water)		
			0.20			
		SV = UTP (GEO952)		Sandy SILT (ML); light brownish grey. Hard; low plasticity; moist; sand, fine to coarse.		
			0.60		16/08/2018	
		SV = 94 / 63 kPa (GEO952)		Silty CLAY (CH); light white grey. Firm; high plasticity; moist. 0.8m: soil is squeezing at 0.75m could not advance hand auger		
1		SV = 79 / 50 kPa (GEO952)				
	0 3 2 2 3 2 3 4 6 6 5 6 6	SV = 79 / 47 kPa (GEO952)				
			1.50	EOH: 1.50m		
2						
3						
4						

PHOTO / SKETCH

WATER OBSERVATIONS

Date / Time	Water Level (m)	Type	Remarks
16/08/2018 12:00:00 a.m.	0.60	Static Water Level	

REMARKS

SYMBOLS

- Standing Water Level
- Water Out flow
- Water In flow

Produced with Core-GS

KDC - Approved Building Consent Document - BC210208 - Pg 17 of 114 - 2/07/2021 - ComplyNZ

Hawthorn Geddes
engineers & architects ltd

LOG OF HAND AUGER

HA9
PAGE 1 OF 1

CLIENT	Todd Sampson	PROJECT	Sampson Family Trust - Geo Phoenix Place, Dargaville
PROJECT NUMBER	11546	PROJECT LOCATION	Phoenix Place, Dargaville
START DATE	16/08/18	COMPLETED DATE	16/08/18
COORDINATES		LEVEL	0.00
DRILLING CONTRACTOR	HGEA		
DRILLING METHOD	50mm Hand auge		
LOGGED BY	AM		
HOLE LOCATION	Lot 10/Lot 11		

DEPTH (m)	SCALA (Blows / 100mm)	TESTS	GRAPHIC LOG	MATERIAL DESCRIPTION	WATER	DEPTH (m)
	1 1 2 3 4 5 6 7 8 8 9	SV = 102 / 37 kPa (GEO287)	TS	0.15 Topsoil mixture silt, brown, wet, low plasticity.		
				Sandy SILT (ML); light grey brown. Stiff; low plasticity; moist; sand, fine to medium.		
				0.65 Silty CLAY (CH); light grey white. Stiff; high plasticity; moist.	16/08/2018	
1		SV = 72 / 40 kPa (GEO287)		0.9m: white and soil is squeezing at 0.9m could not advance hand auger		
				1.20 EOH: 1.20m		
2						
3						
4						

PHOTO / SKETCH

WATER OBSERVATIONS

Date / Time	Water Level (m)	Type	Remarks
16/08/2018 12:00:00 a.m.	0.80	Static Water Level	

REMARKS

SYMBOLS

- Standing Water Level
- Water Out flow
- Water In flow

Produced with Core-GS

KDC - Approved Building Consent Document - BC210208 - Pg 18 of 114 - 2/07/2021 - ComplyNZ

Hawthorn Geddes engineers & architects ltd

LOG OF HAND AUGER

HA10

PAGE 1 OF 1

CLIENT Todd Sampson
PROJECT Sampson Family Trust - Geo Phoenix Place, Dargaville
PROJECT NUMBER 11546
PROJECT LOCATION Phoenix Place, Dargaville
START DATE 16/08/18 COMPLETED DATE 16/08/18
COORDINATES LEVEL 0.00
DRILLING CONTRACTOR HGEA
DRILLING METHOD 50mm Hand auge
LOGGED BY TE
HOLE LOCATION Lot 12/ Lot 13

DEPTH (m)	SCALA (Blows / 100mm)	TESTS	GRAPHIC LOG	MATERIAL DESCRIPTION	WATER	DEPTH (m)
			TS	Topsoil mixture silt brown, wet, low plasticity.		
			0.20			
		SV = UTP (GEO952)		Sandy SILT (ML), with some peat (spongy); light brown grey. Stiff; low plasticity; moist; sand, fine to coarse.	16/08/2018	
			0.50			
		SV = 83 / 29 kPa (GEO287)		Silty CLAY (CH); light grey white. Stiff; high plasticity; moist.	16/08/2018	
				0.5m: hard to auger at change of material.		
1				0.9m: soil is squeezing at 0.9m could not advance hand auger		
	1		1.10	EOH: 1.10m		
	2	SV = 83 / 51 kPa (GEO287)				
	3					
	5					
	6					
	8					
	9					
	10					
2	11					
	12					
3						
4						

PHOTO / SKETCH

WATER OBSERVATIONS

Date / Time	Water Level (m)	Type	Remarks
16/08/2018 12:00:00 a.m.	0.20	Inflow	
16/08/2018 12:00:00 a.m.	0.50	Static Water Level	

REMARKS

SYMBOLS

- Standing Water Level
- Water Out flow
- Water In flow

Produced with Core-GS

KDC - Approved Building Consent Document - BC210208 - Pg 19 of 114 - 2/07/2021 - ComplyNZ

NOTE:
SITE INFORMATION ADAPTED FROM SURVEY DRAWING PROVIDED BY PARALLAX REFERENCE 16091-05;
AERIAL PHOTO PROVIDED BY LINZ AND MAY SHOW DISTORTION;
ALL INFORMATION MUST BE CONFIRMED ON SITE;
TO BE READ IN CONJUNCTION WITH HAWTHORN GEDDES ENGINEERS & ARCHITECTS LTD REPORT REFERENCE 11546

Key

HA Hand augered borehole locations

N

Lot 13 DP 387534
DP 387534
Lot 27 DP 387534
Lot 26 DP 387534
Lot 30 DP 387534
Lot 25 DP 387534
Lot11 773m² 689m² Net HA9
Lot 31 DP 387534
Lot 4 DP 84313
Lot 2 DP 415663
Lot 10 665m²
Lot 23 DP 387534
Lot 9 620m²
Lot 12 832m² 758m² Net
HA7
Lot 8 620m²
HA10
Lot 21 DP 387534
Lot 7 620m²
Lot13 626m²
Lot 14 618m²
Pt Lot 4 DP 15415
Lot 20 DP 387534
HA5
HA8
Lot 6 600m²
Lot 15 618m²
Lot 19 DP 387534
Lot 36 DP 387534
Lot 5 600m²
Lot 16 618m²
Lot 4 600m² HA3
Lot 17 618m² HA6
Lot 3 600m²
Lot 18 618m²
Lot 2 716m² 620m² Net HA1
Lot 19 618m²
Lot 20 618m² HA4
Lot 1 997m² 602m² Net
Lot 21 618m²
Lot 22 618m²
Lot 23 688m² 606m² Net HA2
Lot 7 DP 15415

USE WRITTEN DIMENSIONS. DO NOT SCALE FROM DRAWING.

© HAWTHORN GEDDES ENGINEERS & ARCHITECTS LTD (HGE&A)
THE COPYRIGHT OF THIS DRAWING IS THE PROPERTY OF HGE&A.
REPRODUCTION OF THIS DESIGN OR DRAWING IS NOT PERMITTED UNLESS PERMISSION IS OBTAINED FROM HGE&A.

SITE PLAN
SCALE - 1:1000

Hawthorn Geddes
engineers & architects ltd
7 Selwyn Avenue
Whangarei 0110
Phone: 09 438 7139
hg@hgcs.co.nz
Unit 21a, The Grange
Warkworth 0910
Phone: 09 283 3428
www.hawthorngeddes.co.nz

CLIENT SAMPSON FAMILY TRUST
PROJECT GEOTECHNICAL ASSESSMENT
PHOENIX PLACE, DARGAVILLE
DRAWING SITE PLAN

PROJECT No. 11546
SHEET Figure 1

22/08/2018 11:33:40 a.m. K:\11546 Sampson Family Trust Geotech Assessment Phoenix Place Dargaville\11546 180817 site plan.dwg

File: 17644

29 March 2021

KDC - Approved Building Consent Document - BC210208 - Pg 20 of 114 - 2/07/2021 - ComplyNZ

To whom it may concern,

Proposed New Dwelling – Sampsons Way, Dargaville - Lot 8 DP 542244

We have supplied a Producer Statement for Design (PS1) for Clause B1 of the New Zealand Building Code.

We are not able to provide a PS1 covering Clause B2 as there is no effective verification method for B2 contained within the Building Code. However, we supply this letter to confirm that for the structural elements shown in our documentation, and covered by our PS1:

Timber – Timber treatment has been selected in accordance with Table 1 of NZS 3602:2003, Table 1A of NZBC B2/AS1, and NZS 3640:2003, as applicable.

Concrete – Concrete strength and covers have been selected in accordance with Section 3 of NZS 3101:Part 1, and Section 4.5 of NZS 3604:2011 as applicable.

Inspections required by RS Eng Ltd are listed as follows:

- Site preparation
    - Stripped site inspection
    - Hardfill building platform inspection
    - RibRaft pre-pour

We expect that all other aspects of the build will be covered by the usual KDC inspections.

Yours faithfully

Steven Turner
Chartered Professional Engineer
RS Eng Limited

engineering new zealand

ace new zealand

association of consulting and engineering

Building Code Clause(s) B1

PRODUCER STATEMENT – PS1 – DESIGN

KDC - Approved Building Consent Document - BC210208 - Pg 21 of 114 - 2/07/2021 - ComplyNZ

ISSUED BY: RS Eng Ltd
(Design Firm)

TO: GJ Gardner Homes
(Owner/Developer)

TO BE SUPPLIED TO: Kaipara District Council
(Building Consent Authority)

IN RESPECT OF: New Dwelling
(Description of Building Work)

AT: Sampsons Way
(Address)

Town/City: Dargaville **LOT** 8 **DP** 542244 **SO**
(Address)

We have been engaged by the owner/developer referred to above to provide:

Structural calculations, refer RS Eng Ltd job Ref: 17644

(Extent of Engagement)

services in respect of the requirements of Clause(s) B1/VM1 of the Building Code for:

☐ All or ■ Part only (as specified in the attachment to this statement), of the proposed building work.

The design carried out by us has been prepared in accordance with:

■ Compliance Documents issued by the Ministry of Business, Innovation & Employment B1/VM1, B1/VM4 or
(verification method/acceptable solution)

☐ Alternative solution as per the attached schedule

The proposed building work covered by this producer statement is described on the drawings titled:

Rachyl Edge & Regan Randell, Lot 8, Sampsons Way, Dargaville and numbered Sheets 6, 23, 24, 25, 26;
together with the specification, and other documents set out in the schedule attached to this statement.

On behalf of the Design Firm, and subject to:
(i) Site verification of the following design assumptions Geotechnical Report by Hawthorn Geddes, Ref:11546, Dated 27/8/2018
(ii) All proprietary products meeting their performance specification requirements;

I believe on reasonable grounds that a) the building, if constructed in accordance with the drawings, specifications, and other documents provided or listed in the attached schedule, will comply with the relevant provisions of the Building Code and that b), the persons who have undertaken the design have the necessary competency to do so. I also recommend the following level of construction monitoring/observation:

☐ CM1 ■ CM2 ☐ CM3 ☐ CM4 ☐ CM5 (Engineering Categories)

I, Steven Turner am: ■ CPEng # 87465
(Name of Design Professional)

I am a member of: ■ Engineering New Zealand and hold the following qualifications: ~~BE (Civil), IntPE, CPEng, CMEngNZ~~

The Design Firm issuing this statement holds a current policy of Professional Indemnity Insurance no less than $200,000*.
The Design Firm is a member of ACE New Zealand: ■

SIGNED BY Steven Turner (Signature)
(Name of Design Professional)

ON BEHALF OF RS Eng Ltd Date 29/03/2021
(Design Firm)

Note: This statement shall only be relied upon by the Building Consent Authority named above. Liability under this statement accrues to the Design Firm only. The total maximum amount of damages payable arising from this statement and all other statements provided to the Building Consent Authority in relation to this building work, whether in contract, tort or otherwise (including negligence), is limited to the sum of $200,000.*

This form is to accompany **Form 2 of the Building (Forms) Regulations 2004** for the application of a Building Consent.

THIS FORM AND ITS CONDITIONS ARE COPYRIGHT TO ACE NEW ZEALAND AND ENGINEERING NEW ZEALAND

G.J. Gardner. HOMES

Reference: 390076
Date: 31/03/2021

H1 ENERGY EFFICIENCY CALCULATIONS FOR RESIDENTIAL DWELLING FOR EDGE & RANDELL AT SAMPSONS WAY DARGAVILLE, LOT 8, DP 542244

KDC - Approved Building Consent Document - BC210208 - Pg 22 of 114 - 2/07/2021 - ComplyNZ

Joinery ID	Height (mm)	Width (mm)	Area (m^2)	Orientation
W01	1300	1500	1.95	NORTH
W02	1300	1500	1.95	NORTH
W03	600	1500	0.9	WEST
W04	1800	600	1.08	SOUTH
W05	1300	1500	1.95	SOUTH
W06	1800	600	1.08	SOUTH
D02	2090	880	1.84	NORTH
D03	2090	1800	3.76	WEST
D04	2090	1800	3.76	NORTH

Note: Joinery Units D01, D052 & W07are excluded from the calculations as they are outside of the proposed thermal envelope

Glazing required to be <30% of the total wall area (or <50% to meet the 'Great Northern Glazing Method.'

EAST, SOUTH & WEST GLAZING	
TOTAL GLAZING EAST/SOUTH/WEST	8.77
TOTAL WALL EAST/SOUTH/WEST	76.44
TOTAL GLAZING TO WALL AREA	**11.48%**

NORTH, EAST, SOUTH & WEST	
TOTAL GLAZING N, E, S & W	18.27
TOTAL WALL N, E, S & W	108.24
TOTAL GLAZING TO WALL AREA	**16.88%**

G.J. Gardner. HOMES

Construction R-Value Required to meet the Schedule Method Compliance Path (Climate Zone 1):

CONSTRUCTION R-VALUE REQUIRED:		CONSTRUCTION R-VALUE ACHIEVED:	
WALL (BRICK)	R1.9	PINK BATTS R2.2	R2.02
WALL (WEATHERBOARD)	R1.9	PINK BATTS R2.2	R2.03
WALL (INTERNAL GARAGE)	R1.9	PINK BATTS R2.2	R2.46
ROOF	R2.9	PINK BATTS R3.2	R3.45
FLOOR	R1.3	FIRTH RIBRAFT SLAB	R1.3
GLAZING	R0.26	DOUBLE GLAZING	R0.26

H1 ENERGY EFFICIENCY ACHIEVED VIA THE SCHEDULE METHOD IN NZS4218 FOR COMPLIANCE WITH H1/AS1 OF THE NZ BUILDING CODE

Sucfelt Construction Ltd – Whangarei / Kaipara Franchisee for G.J. Gardner Homes
Ph: (09) 437 5666 | Web: www.gjgardner.co.nz

KDC - Approved Building Consent Document - BC210208 - Pg 23 of 114 - 2/07/2021 - ComplyNZ

G.J. Gardner. HOMES

KDC - Approved Building Consent Document - BC210208 - Pg 24 of 114 - 2/07/2021 - ComplyNZ

Construction R-value Calculator

This webpage calculates the R-value of walls, roofs and suspended floors for most insulation material R-values. It uses the "iso-thermal planes" method, the same method as used in NZS4214:2006.

Some of the possible material combinations may not be suitable for actual constructions, i.e. EPS based claddings directly fixed on timber framing. Please make sure to select only appropriate material combinations.

If your construction is not listed, please send an e-mail to designnavigator@gmail.com with a description and a detail drawing (pdf) of it.

Please select the element type. Then choose the construction details and enter the R-value of the insulation either directly in the text box or by choosing a product from the right panel.

- Floors ○
- Walls ◉
- Roofs ○

Date: 24/09/2020

90mm Timber Framed Wall - Brick — 2.03 m²°C/W

Type: Wall: Timber Frame with vented Cavity

Timber Frame with vented Cavity [view detail]

external surface 0.03

Cladding : 70mm brick
R-value: 0.06

Air Barrier : Building paper
R-value: 0.01

Timber Frame & Cavity : 90mm, studs @ 400mm, dwangs @ 800mm

Wall Frame Area: 17.9%	*Cavity Area: 82.1%*
15-90mm vented cavity (all R-values on ext. side of cavity will be halved), R: 0.08	15-90mm vented cavity (all R-values on ext. side of cavity will be halved), R: 0.08
Framing : *R-value: 0.75*	Pink®Batts® R2.4 Wall 2.4
	still Airgap: none *R-value: 0.00*

Wall Lining : Gypsum plasterboard 10mm
R-value: 0.04

internal surface 0.09

[Print Page]

Current NZS4218:2009 Schedule Method minimum R-value Targets (non-solid contruction):

	Zone 1	Zone 2	Zone 3
Roof	R-2.9	R-2.9	R-3.3
Wall	R-1.9	R-1.9	R-2.0
Floor	R-1.3	R-1.3	R-1.3
Glazing (vertical)	R-0.26	R-0.26	R-0.26
Glazing (skylights)	R-0.26	R-0.26	R-0.31

Australian Building Code Targets:

	All Zones except NSW	NSW
Roof	R-4.1	R-6.3
Wall	R-2.9	R-3.8

G.J. Gardner. HOMES

KDC - Approved Building Consent Document - BC210208 - Pg 25 of 114 - 2/07/2021 - ComplyNZ

Construction R-value Calculator

This webpage calculates the R-value of walls, roofs and suspended floors for most insulation material R-values. It uses the "iso-thermal planes" method, the same method as used in NZS4214:2006.

Some of the possible material combinations may not be suitable for actual constructions, i.e. EPS based claddings directly fixed on timber framing. Please make sure to select only appropriate material combinations.

If your construction is not listed, please send an e-mail to designnavigator@gmail.com **with a description and a detail drawing (pdf) of it.**

Please select the element type. Then choose the construction details and enter the R-value of the insulation either directly in the text box or by choosing a product from the right panel.

Floors ○
Walls ◉
Roofs ○

Date: 24/09/2020

90mm Timber Framed Wall - Cedar — **2.01** m²°C/W

Type: Wall: Timber Frame with vented Cavity

Timber Frame with vented Cavity [view detail]

external surface 0.03	
Cladding : Vertical weatherboard *R-value: 0.16*	
Air Barrier : Building paper *R-value: 0.01*	
Timber Frame & Cavity : 90mm, studs @ 400mm, dwangs @ 480mm	
Wall Frame Area: 21.0%	*Cavity Area: 79.0%*
15-90mm vented cavity (all R-values on ext. side of cavity will be halved), R: 0.08	15-90mm vented cavity (all R-values on ext. side of cavity will be halved), R: 0.08
Framing : *R-value: 0.75*	Pink®Batts® R2.4 Wall 2.4
	still Airgap: none *R-value: 0.00*
Wall Lining : Gypsum plasterboard 10mm *R-value: 0.04*	
internal surface 0.09	

[Print Page]

Current NZS4218:2009 Schedule Method minimum R-value Targets (non-solid contruction):

	Zone 1	Zone 2	Zone 3
Roof	R-2.9	R-2.9	R-3.3
Wall	R-1.9	R-1.9	R-2.0
Floor	R-1.3	R-1.3	R-1.3
Glazing (vertical)	R-0.26	R-0.26	R-0.26
Glazing (skylights)	R-0.26	R-0.26	R-0.31

Australian Building Code Targets:

	All Zones except NSW	NSW
Roof	R-4.1	R-6.3
Wall	R-2.9	R-3.8

G.J. Gardner. HOMES

KDC - Approved Building Consent Document - BC210208 - Pg 26 of 114 - 2/07/2021 - ComplyNZ

Construction R-value Calculator

This webpage calculates the R-value of walls, roofs and suspended floors for most insulation material R-values. It uses the "iso-thermal planes" method, the same method as used in NZS4214:2006.

Some of the possible material combinations may not be suitable for actual constructions, i.e. EPS based claddings directly fixed on timber framing. Please make sure to select only appropriate material combinations.

If your construction is not listed, please send an e-mail to designnavigator@gmail.com with a description and a detail drawing (pdf) of it.

Please select the element type. Then choose the construction details and enter the R-value of the insulation either directly in the text box or by choosing a product from the right panel.

Floors ○
Walls ◉
Roofs ○

Date: 25/09/2020

Internal Timber Wall to Garage — 2.66 m²°C/W

Type: Wall: Timber Frame (direct fixed cladding)

Timber Frame (direct fixed Cladding) [view detail]

external surface 0.03

Cladding : Gypsum plasterboard 10mm into still air (garage, etc.)
R-value: 0.10

Air Barrier : none
R-value: 0.00

Timber Frame & Cavity : no framing (for example SIP Panels)

Wall Frame Area: 0.0% *Cavity Area: 100.0%*

Framing : *R-value: 0.00*

Pink®Batts® R2.4 Wall 2.4

still Airgap: none
R-value: 0.00

Wall Lining : Gypsum plasterboard 10mm
R-value: 0.04

internal surface 0.09

[Print Page]

Current NZS4218:2009 Schedule Method minimum R-value Targets (non-solid contruction):

	Zone 1	Zone 2	Zone 3
Roof	R-2.9	R-2.9	R-3.3
Wall	R-1.9	R-1.9	R-2.0
Floor	R-1.3	R-1.3	R-1.3
Glazing (vertical)	R-0.26	R-0.26	R-0.26
Glazing (skylights)	R-0.26	R-0.26	R-0.31

Australian Building Code Targets:

	All Zones except NSW	NSW
Roof	R-4.1	R-6.3
Wall	R-2.9	R-3.8

G.J. Gardner. HOMES

Construction R-value Calculator

This webpage calculates the R-value of walls, roofs and suspended floors for most insulation material R-values. It uses the "iso-thermal planes" method, the same method as used in NZS4214:2006.

Some of the possible material combinations may not be suitable for actual constructions, i.e. EPS based claddings directly fixed on timber framing. Please make sure to select only appropriate material combinations.

If your construction is not listed, please send an e-mail to designnavigator@gmail.com with a description and a detail drawing (pdf) of it.

Please select the element type. Then choose the construction details and enter the R-value of the insulation either directly in the text box or by choosing a product from the right panel.

Floors ○
Walls ○
Roofs ◉

Date: 24/09/2020

Metal Tile Roof — 3.90 m²°C/W

Type: Roof: Timber framed truss Roof, direct fixed or battened flat Ceiling

Timber framed Roof, direct fixed or battened flat Ceiling [view detail]

external surface 0.03

Roofing : Metal tiles with building paper
R-value: 0.01

Pink®Batts® R3.6 Ceiling 3.6

Timber Frame & Cavity :

no framing (for example SIP Panels)

Roof Frame Area: 0.0% *Cavity Area: 100.0%*

Roof space (still air) 0.11	Roof space (still air) 0.11
Framing : *R-value: 0.00*	Insulation :

Roof Lining : Gypsum plasterboard 13mm
R-value: 0.06

internal surface 0.09

Non-IC-rated recessed downlights
Ceiling Area [m²]: Number of downlights: Clearance from lamp holder side [m]:

[Print Page]

Current NZS4218:2009 Schedule Method minimum R-value Targets (non-solid contruction):

	Zone 1	Zone 2	Zone 3
Roof	R-2.9	R-2.9	R-3.3
Wall	R-1.9	R-1.9	R-2.0
Floor	R-1.3	R-1.3	R-1.3
Glazing (vertical)	R-0.26	R-0.26	R-0.26
Glazing (skylights)	R-0.26	R-0.26	R-0.31

Australian Building Code Targets:

	All Zones except NSW	NSW
Roof	R-4.1	R-6.3
Wall	R-2.9	R-3.8

KDC - Approved Building Consent Document - BC210208 - Pg 27 of 114 - 2/07/2021 - ComplyNZ

Application for Connection to Services

KAIPARA DISTRICT
Kaipara te Oranganui Two Oceans Two Harbours

CONNECTION/DISCONNECTION TO WATER/WASTEWATER/STORMWATER/WATER METER

KDC - Approved Building Consent Document - BC210208 - Pg 28 of 114 - 2/07/2021 - ComplyNZ

Property Details

Owner's Name:	Rachyl Edge and Regan Randell
Property Address:	Lot 8, TBA Sampsons Way, Dargaville
Mailing Address: *(If different from above)*	C/- PDC 0152, Maungatapere, Whangarei
Valuation Number:	
Email Address:	rachyledge@gmail.com
Telephone number:	021 026 07573
Mobile number:	

Type of property: **Residential/Urban** ✓ **Rural** ☐ **Commercial** ☐

Number of connections required: **Water** ☐ **Wastewater** ☐ **Stormwater** ☐

Water Meter Only ✓

Disconnection required: ☐

Please provide a detailed plan of work proposed. This must be produced in conjunction with Council's Engineering Code of Practice. ☐ Attached

Additional Connection Details:

Signature of Applicant J K Mollet **Date** 31 March 2021

KAIPARA DISTRICT

Water – Fees Apply for 1 July 2020 to 30 June 2021

Description	Fee (Incl. GST) $
EXISTING CONNECTION POINT	
Provide 20 millimetres meter	275.00
Provide 25 millimetres meter	520.00
NEW CONNECTION	
Provide 20 millimetres connection, testable backflow preventer and meter	1,650.00
Provide 25 millimetres connection, testable backflow preventer and meter	2,040.00
Provide 20 millimetres connection, non-testable backflow preventer and meter	1,400.00
Provide 25 millimetres connection, non-testable backflow preventer and meter	1,820.00

Notes

1 The Council's contractor will provide all necessary components to complete the connection from the main to the property boundary. If the distance from the main to the boundary exceeds 2.0 metres, Council reserves the right to recover actual costs.

2 The Council's contractor will provide the meter and install onto an existing connection at the boundary.

3 The Council's contractor will make the physical connection to the Council main and terminate at the property boundary with a water meter. The applicant will carry out all other physical works.

4 This section applies where applicable to all connections.

4a Where a larger meter is required a quote will be obtained from Council's contractor. This quoted cost plus 15% shall be paid to Council prior to work commencing.

4b Where a connection is not straightforward (e.g. crossing a road or lifting cobblestones) a quote will be obtained from Council's contractor. The quoted cost plus 15% shall be paid to Council prior to work commencing.

4c Where land is being subdivided, it is the subdivider's responsibility to provide a water connection **and water meter** to each lot and connect the development's water supply reticulation system to the public system. In all cases connection to the Council main shall be done by Council's contractor and payment shall be made directly by the subdivider to Council's contractor.

Other Connection/Disconnection Fees

Description	Fee (Incl. GST) $
Annual inspection fee for backflow preventer	85.00
Water reconnection fee or removal of water flow restrictor	290.00
Water disconnection fee	290.00

KDC - Approved Building Consent Document - BC210208 - Pg 29 of 114 - 2/07/2021 - ComplyNZ

KAIPARA DISTRICT

Stormwater Disposal

Description	Fee (Incl. GST) $
Inspection fees	360.00
Connection fee	As per approved contractor's quote + 15%

Connections to public infrastructure can be undertaken by Council Contractors if requested. This incurs the connection fee.

The connection fee is costed for a standard residential connection. It includes a "y" junction and piping to the boundary.

Connections must be made by a certified drain layer. The connection should be inspected by the Building Consent officer.

Connections must be as per Council's Engineering Standards.

Wastewater Disposal

Description	Fee (Incl. GST) $
Inspection fees	360.00
Connection fee – *Excludes Mangawhai*	As per council contractor's quote + 15%

Connections to public infrastructure are undertaken by Council contractors or can be completed by a certified drainlayer by arrangement with the Council engineer.
The connection fee is costed for a standard residential connection. It includes a "y" junction and piping to the boundary.

Connections must be as per Council's Engineering Standards.

Office Use Only

Customer Number _____

Services Map Supplied _____

Site Plan Attached _____

Fees Paid _____

Receipt Number _____

KDC - Approved Building Consent Document - BC210208 - Pg 30 of 114 - 2/07/2021 - ComplyNZ

KAIPARA DISTRICT
Kaipara te Oranganui • Two Oceans Two Harbours

Vehicle Crossing Permit Application

KAIPARA DISTRICT COUNCIL

KDC - Approved Building Consent Document - BC210208 - Pg 31 of 114 - 2/07/2021 - ComplyNZ

Application No .....

Resource Consent No .....
(only required if current RC exists of which a VC permit is a part of)

Applicants Details

Owner's Name Rachyl Edge and Regan Randell .....
Postal Address PDC 0152, Maungatapere, Whangarei .....
Contact Telephone No +642102607573 .....Email rachyledge@gmail.com .....
Agent Name GJ Gardner Homes .....
Postal Address P O Box 8046, Kensington, Whangarei .....
Contact Telephone No 09 437 5666 .....Email Whangarei@gjgardner.co.nz .....

Send permit to: ☐ Owner ☑ Agent

Site Location

Street/Rapid No Lot 8 ..... Road Name Sampsons Way .....
Town or Locality Dargaville .....
Legal Description 542244 ..... Valuation No .....

Contractor/Traffic Management Plan Details

Please Note: ***Application will not be accepted by Council if a Plan is not attached for the location of your vehicle access.***

Name of person/firm constructing the crossing Complete Concrete .....
Person in Charge of Traffic Management (STMS) .....
Postal Address PO Box 199, Ruakaka, Whangarei .....
Contact Telephone No +64223534002 .....Email completeconcretelimited@gmail.com .....

Crossing Information Required

Location:

Adjacent Road is: .....

☑ Urban (S05) ☐ Rural (S06)

☑ Sealed with kerb & channel ☐ Sealed with no kerb & channel ☐ Metalled (only applicable to unsealed roads)

Intended Use

☑ Residential ☐ Commercial ☐ Other *(please specify)*.....

KAIPARA DISTRICT
Kaipara te Oranganui • Two Oceans Two Harbours

Vehicle Crossing Permit Application

KAIPARA DISTRICT COUNCIL

KDC - Approved Building Consent Document - BC210208 - Pg 32 of 114 - 2/07/2021 - ComplyNZ

SITE LOCALITY PLAN

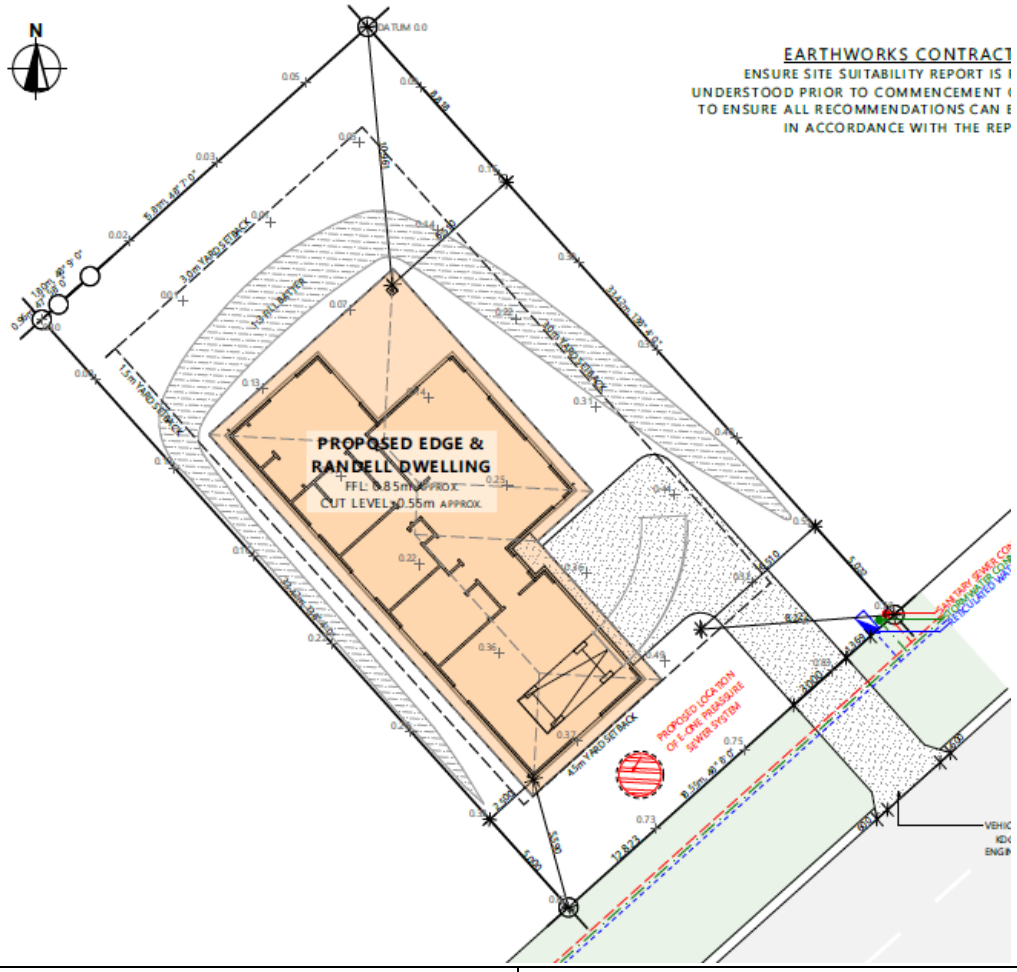

Map Showing Location of Vehicle Crossing

Property Description:

Road Name:

Sampsons Way

Please show the following:

- Roads
- Property boundaries
- Location of entranceway – including **distances** from boundaries and adjacent numbered property entrances
- Other identifiable land marks, buildings etc.

The Application Fee must be paid before the permit can be processed.
If the applicant has a current resource consent of which the Vehicle Crossing is a part of, the fee to be charged is $125.00, the inspections will be billed separately. For all other applications the fee is $485.00 which includes the pre and post approval inspections.
Please complete the form and send it to council@kaipara.govt.nz

Signed by Owner/Agent: …… Date: ..... ……

Office Use Only

Receipt No: ..... Date: .....

KDC - Approved Building Consent Document - BC210208 - Pg 33 of 114 - 2/07/2021 - ComplyNZ

G.J. Gardner.
HOMES

G J Gardner Homes Whangarei / Kaipara

PROJECT SPECIFICATION

EDGE & RANDELL

SAMPSONS WAY
DARGAVILLE
KAIPARA

Issued for Consent

390076

KDC - Approved Building Consent Document - BC210208 - Pg 34 of 114 - 2/07/2021 - ComplyNZ

PROJECT OVERVIEW

Scope

Single storey timber framed dwelling in general accordance with NZS3604:2011 including SED MiTek truss design completed by Carters.

Dwelling constructed on specifically deisgned Firth Ribraft concrete slab.

The proposed dwelling is clad in 70 Series Brick over a 50mm drained cavity and a Gerard pressed metal tile roof.

The proposed dwelling is in general accordance with the New Zealand Building Code acceptable solutions where possible, with minor alterations to typical details providing alternative solutions with the intent to exceed the minimum performance requirements.

Address

Site Address	SAMPSONS WAY
Suburb	DARGAVILLE
City	KAIPARA
Lot #	8
DP #	542244

Site Conditions

Wind Zone	H - High Wind Speed
Earthquake Zone	Zone 1
Exposure Zone	Zone C - Medium
Snow Loading Zone	Zone N0

Related Parties

Engineer

Mitek, In Ling Ng, CPEng 146585, 40 Neales Road, East Tamiki, Auckland, 2163, 09 274 7109

Engineer

R S Eng, Steve Turner, CPEng 87465, steve@rseng.co.nz, 2 Seaview Road, Whangarei, 0110, 09 437 3273

Designer

Conrad Lienert, BP113635, conrad_lienert_design@hotmail.com, Mangaroa, Upper Hutt, 5371

TABLE OF CONTENTS

Siteworks 5
Siteworks 5
Concrete 9
Ribraft Concrete Floors 9
Brickwork 11
Brickwork 11
Underlay, Foil & DPC 13
Waterproofing 15
Interior Wet Area Waterproofing Membrane Systems 15
Carpentry 18
Timber Framing 19
GIB® Rondo® Metal Batten Systems 22
GIB® Plasterboard Linings 24
GIB Aqualine® Wet Area Systems 30
Aluminium Joinery 33
Aluminium Windows & Doors from APL Window Solutions 34
Insulation 37
Thermal Insulation 37
Plumbing 39
Workmanship 39
Drainlaying 40
Foul Water Drainage 40
Stormwater Drainage 44
Electrical 48
Workmanship 49
Appendix 50
BRANZ Apprasial No.812 (2019) - Sikalastic Interior Waterproofing System 50
Clearlite Shower Shower Tray Installation 50
Clearlite Shower Wall Liner Installation 50
Sikalastic Interior Waterproofing System Installation Details 50
Sika BlackSeal Plus - Slab Edge Waterproofing Membrane 50
Roof Cladding 50
Dektite - Pipe Penetration for Pressed Metal Tile 50
Masons - Window Flashing Tape - Codemark Certificate 50
Thermakraft 215 - Roofing Underlay 50
BRANZ Apprasial No.548 (2019) - Tekton Building Wrap 50
Masons - Window Flashing Tape - Installation 50
DPC - Malthoid Damp Proof Course 50
Lumberlok Stud to Top Plate Fixing Schedule 50
Ecoply - EP1 50
Ecoply - EPG 50
GIB - GS1-N 50
Pipe Materials for Hot & Cold Water 50
Rheem 180l Mains Pressure HWC 50
E1/AS1 - Bedding and Backfilling 50
Brick Specification 50
CodeMark Certificate of Conformity - Firth Ribraft® Floor System 50
BRANZ Appraisal No.928 (2016) - GIB EzyBrace Systems 2016 50
BRANZ Appraisal No.427 (2007) - GIB Aqualine Wet Area Systems 50

KDC - Approved Building Consent Document - BC210208 - Pg 35 of 114 - 2/07/2021 - ComplyNZ

BRANZ Appraisal No.427 (2007) - GIB Aqualine® Wet Area Systems.....50

KDC - Approved Building Consent Document - BC210208 - Pg 36 of 114 - 2/07/2021 - ComplyNZ

KDC - Approved Building Consent Document - BC210208 - Pg 37 of 114 - 2/07/2021 - ComplyNZ

1 SITEWORKS

1.1 Preliminary

Refer to General Conditions of Contract and the Special Conditions in this Specification as appropriate. Read this section in conjunction with all other trade sections.

1.2 Compliance

Comply with the New Zealand Building Code 1992 including all revisions and amendments, Verification Methods where appropriate, and construction principles that are embodied in the Acceptable Solutions.

Comply with all relevant provisions and recommendations of:

4402.4.1.1:1986(NZS)	Soil compaction tests - Determination of the dry density/water content relationship - Test 4.1.1 New Zealand standard compaction test
4431:1989(NZS)	Code of practice for earth fill for residential development
NZBC B1	Structure
NZBC E1	Surface Water

1.3 Siteworks

1.3.1 Scope

This section sets out the general requirements for sitework necessary for the satisfactory completion of the contract works. All aspects of this work shall be carried out to comply with all statutory obligations and regulations of regulatory bodies controlling the execution of the contract works, and in accordance with the project design documentation.

1.3.2 Requirements

1.3.2.1 Safety

Comply with the Health and Safety at Work Act 2015 (HSWA), and with all relevant Health and Safety at Work Regulations 2016, and with all relevant WorkSafe New Zealand (WorkSafe) Approved Codes of Practice and WorkSafe Information and Guidance, in particular the 'OSH Guidelines For the Provision of Facilities and General Safety in the Construction Industry'.

Carry out all construction operations in accordance with the Contractor's project-specific Health and Safety Plan.

Where construction or demolition work presents a hazard in places to which the public has access, barriers shall be provided and shall:

(a) Be of appropriate height and construction to prevent site hazards from harming traffic or passersby (2.0m or higher)

(b) Be difficult to climb (Linkmesh fence)

(c) Have no openings other than those approved by the territorial authority for access and viewing (Access fence at entry)

(d) Have no gates or doors which project beyond the site when opened

(e) Contain no projection that would be a hazard to traffic or people, and (f) Be clearly marked where the barrier itself may otherwise present a hazard to traffic or passersby.

Where a construction or demolition site contains any hazard which might be expected to attract the unauthorised entry of children, the hazard shall be enclosed to restrict access by children.

1.3.2.2 Geotechnical Report

A geotechnical investigation of the site has been carried out - refer to the Geotechnical Report appended.

1.3.2.3 Stormwater & Sediment Control

Ensure the environmental protection of the site during the works. Carry out construction works and operations to ensure that they fully comply with the relevant controlling environmental authority's sediment control and stormwater discharge guidelines.

Provide suitable measures to prevent or minimise sediment generation and silt runoff in accordance with the requirements of the controlling Territorial Authority. Where required, detailed design of mitigation measures such as fences, cut off ditches, detention ponds, etc., shall be undertaken by a suitably qualified person employed by the Contractor.

Erosion and sediment control measures shall be maintained and remain in place until surface reinstatement has been established. If at any time the performance of the stormwater and sediment control measures, or ongoing review of them, indicates that they need to be extended or modified, the design modification and construction of these shall be undertaken by the Contractor at no extra cost to the Principal.

Basic management principles shall be implemented, in particular:
- areas being exposed at any one time shall be kept to a minimum;
- diversion ditches and catch drains or earth bunds to intercept and divert upslope stormwater runoff around areas of earthworks;
- waterborne silt captured by filter mesh fences, hay bales, vegetation buffer strips or settlement ponds/areas, in a way that manages adverse downstream effects;
- stockpiles of topsoil, excavated earth or other material shall not be positioned where they can be eroded or washed into any drain or watercourse.
- only pump water from trenches and detention areas using methods to prevent sediment entering any drain or watercourse.
- all soil-contaminated water shall be properly filtered before discharging into the stormwater drainage system.

KDC - Approved Building Consent Document - BC210208 - Pg 38 of 114 - 2/07/2021 - ComplyNZ

KDC - Approved Building Consent Document - BC210208 - Pg 39 of 114 - 2/07/2021 - ComplyNZ

1.3.3 Clearing & Stripping

1.3.3.1 Clearing

Remove from the site all vegetation and obstructions within the area of the earthworks that are not designated as remaining in the contract documents.

Clearing shall be carried out as a separate operation before stripping and excavation. Clearing shall include complete removal from the site of lightweight structures, foundations, trees, tree stumps, logs, roots, scrub, grass and other vegetation, paving materials, fences and rubbish, and the off-site disposal of such items.

The removal of surface grass and weeds shall be completed as part of the topsoil stripping operation.

All trees within the limits of the earthworks shall be removed unless designated as remaining by the Contract Administrator and contract documents.

Protect trees and other vegetation designated as remaining within the earthworks area, and trees and other vegetation beyond the limits of the earthworks, from damage by these operations.

Extraction of tree stumps (if any) shall include the removal of roots greater than 25mm diameter.

1.3.4 Excavation

1.3.4.1 Excavation General

Excavate out all ground material above the finished levels or contours indicated on the design drawings, making due allowance for the construction of foundations, ground slabs, retaining walls, hard paving, underground utilities, landscaping and reinstatement of topsoil. The manner of excavations is the responsibility of the Contractor.

Excavation, as a minimum, shall include stripping of the site to remove all rubbish, noxious material and organic material, including topsoil, covering the area where the buildings, paving and other work is to be placed.

Excavations shall be undertaken in accordance with the 'Excavation Safety - Good Practice Guidelines'.

As necessary, cross reference and coordinate excavation work with the design drawings - Architectural, Structural, Building Services, Civil.

As necessary, coordinate excavation work with other trades as to set-out and timing to ensure that all cut faces are covered or finished etc. as soon as practicable after the excavation is complete.

If, in the opinion of the Contract Administrator, weather conditions or the excavation methods employed are such as to result in undue disturbance of adjacent ground or ground below final trimming level, suspend the work and complete the excavation in accordance with the Contract Administrator's instructions.

1.3.4.2 Excavation for Foundations

Foundation excavations shall be accurately cut true to line, level and angle, to minimum sizes and to the levels and grades required for all slabs, footings and foundations, and over the rest of the areas shown for levels adjustment. Foundation excavations shall extend down to firm undisturbed ground to the required depth. Refer to the foundation layout and details shown on the drawings.

1.3.5 Earth Fill

1.3.5.1 Compliance & Testing

Earth fill works shall be carried out in accordance with NZS 4431 and the conditions of the Resource Consent/Building Consent. The Contractor is responsible for all associated earth fill testing and compliance.

KDC - Approved Building Consent Document - BC210208 - Pg 40 of 114 - 2/07/2021 - ComplyNZ

2 CONCRETE

2.1 Preliminary

Refer to General Conditions of Contract and the Special Conditions in this Specification as appropriate. Read this section in conjunction with all other trade sections.

2.2 Compliance

Comply with the New Zealand Building Code 1992 including all revisions and amendments, Verification Methods where appropriate, and construction principles that are embodied in the Acceptable Solutions.

Comply with all relevant provisions and recommendations of:

3101.1&2:2006(NZS)	Concrete Structures Standard
3104:2003(NZS)	Specification for concrete production
3109:1997(NZS)	Concrete construction
3114:1987(NZS)	Specification for concrete surface finishes
3604:2011(NZS)	Timber-framed buildings
4671:2019(AS|NZS)	Steel for the reinforcement of concrete

2.3 Ribraft Concrete Floors

2.3.1 Scope

Supply the required/selected Firth RibRaft components and construct the concrete on-ground floor slab as shown on the drawings. All aspects of this work shall be in accordance with the Firth RibRaft Technical Manual (check www.firth.co.nz or call 0800 800576 for the latest edition), a copy of which must be held on site (and referenced for any aspect where there is the slightest uncertainty), the RibRaft Floor System CodeMark Certificate of Conformity - Certificate No:CM40015-102-R00, and as shown on the drawings.

No Substitutions are permitted for Firth RibRaft Floor System.

2.3.2 Selections

2.3.2.1 220mm Pod Thickness - Specific Engineering Design

Pods thickness: 220mm
DPM: as per NZS 3604:2011
Slab thickness above pods: 90mm
Slab finish: U3

KDC - Approved Building Consent Document - BC210208 - Pg 41 of 114 - 2/07/2021 - ComplyNZ

2.3.3 Installation

2.3.3.1 Installation

All RibRaft installation work shall be carried out by experienced and competent tradesmen, familiar with the techniques and materials specified, in accordance with Firth RibRaft Technical Manual and as shown on the drawings. All handling, preparatory blinding DPM, formwork and reinforcing, and concreting and finishing techniques shall be exactly as recommended by Firth Industries Ltd.
Notify the BCA for inspection of the excavation and of the Ribraft slab ready for pouring, and keep whatever records or test results they may require.

Check that all topsoil etc. has been removed from the RibRaft slab location and that the excavated (or hardfill made-up where necessary) platform is level and approximately 330mm below the required finished floor level. Co-ordinate with other trades to ensure that any wastewater drains or other piped or wired service lines are correctly incorporated (and fully operationally tested as appropriate) as work proceeds.

Place and compact any hardfill or basecourse required by the Engineer for specific design. Blind the surface with up to 50mm of sand, and compact (and adjust if necessary) to accurately level, carrying the sand blinding to at least 500mm beyond the RibRaft perimeter.

Lay the specified DPM over the entire platform and extending at least 200mm beyond the RibRaft perimeter, with strips lapped 150mm and 50mm PVC adhesive tape sealed, and any services penetrations tape sealed. Tape repair any damage to the DPM as soon as it occurs, and re-inspect/repair just before pouring. Construct the slab perimeter formwork as specified above and as detailed, including edge rebates and any slab cut-outs required.

Unload and handle components carefully to avoid any damage, and keep them clean until installed. Place the RibRaft pods in the grid pattern as shown on the layout plan, with Firth 300mm spacers to the perimeter and under loadbearing walls, and Firth 100mm spacers between all other pods. Neatly cut pods as required to infill where the shape or size of the slab does not match the 1.2m pods module.

Reinforce as specified and as noted on the drawings, ensuring the bars are positioned in the spacer lugs, install plumbing waste pipes etc. as required, and then install the reinforcing mesh over the top of the pods, seated on mesh chairs, and install the re-entrant corner steel (Grade 500E) across internal corners as noted. Install starters as detailed for any subsequent masonry walls, ensuring accurate positioning (as bending to masonry core positions is not acceptable).

Pour Firth RaftMix (or pump Firth RaftMix Pump), and vibrate and screed and finish as specified, and cure and install shrinkage control joints as specified or noted.
Remove trade debris from the area progressively; on completion leave the works area completely clean.

KDC - Approved Building Consent Document - BC210208 - Pg 42 of 114 - 2/07/2021 - ComplyNZ

KDC - Approved Building Consent Document - BC210208 - Pg 43 of 114 - 2/07/2021 - ComplyNZ

3 BRICKWORK

3.1 Preliminary

Refer to General Conditions of Contract and the Special Conditions in this Specification as appropriate. Read this section in conjunction with all other trade sections.

3.2 Compliance

Comply with the New Zealand Building Code 1992 including all revisions and amendments, Verification Methods where appropriate, and construction principles that are embodied in the Acceptable Solutions.

Comply with all relevant provisions and recommendations of:

2295:2006(NZS)	Pliable, permeable building underlays
2699.1:2000(AS/NZS)	Built-in components for masonry construction - Wall ties
2904:1995(AS/NZS)	Damp-proof courses and flashings
3103:1991(NZS)	Specification for sands for mortars and plasters
3604:2011(NZS)	Timber-framed buildings
4200.1:2017(AS|NZS)	Pliable building membranes and underlays - Part 1: Materials
4210:2001(NZS)	Masonry construction: Materials and workmanship
4236:2002(SNZHB)	Masonry veneer wall cladding
4389:2015(AS/NZS)	Roof safety mesh
4534:2006(AS/NZS)	Zinc and zinc/aluminium-alloy coatings on steel wire
NZBC B2	Durability
NZBC E2/AS1	External Moisture
NZMRM Code of Practice	NZ Metal Roof and Wall Cladding Code of Practice - Version 2.2

3.3 Brickwork

3.3.1 Scope

Supply and lay the selected bricks to form the brick elements as shown on the drawings. All aspects of this work shall be in accordance with the related compliance documents and as shown on the drawings.

3.3.2 Workmanship

Where required by the NZ Building Act 2004 it is the building contractor's responsibility to ensure that all restricted building work is carried out by a Licensed Building Practitioner.

All work shall only be carried out by Licensed Building Practitioners - Bricklaying and Blocklaying, and conform to the requirements of NZS 4210.

Submit evidence on request of experience, relevant qualifications, LBP Licence - Bricklaying & Blocklaying, New Zealand Masonry Trades Association (NZMTA) Member Registration.

Co-operate with the concretor and carpenter in the setting out of the works.
Co-operate with other trades to ensure that all preliminary and preparatory works, including all framing, membranes, wraps, rigid air barriers, and flashings, all relevant clearances, and any other related works, are completed to specification and as shown on the drawings.
Co-ordinate with trades the locations of pipes, outlets, cables, meter boards and other fittings installed by others.

All brick veneer walls shall be true to line, level and plumb, and within the tolerances tabled in NZS 4210 and SNZ HB4236. All brickwork laid to stretcher bond pattern, with joints width 10mm +/- 3mm.

3.3.3 Installation

Install all brickwork related damp proof courses in accordance with the requirements of NZBC E2/AS1 and to the details shown on the drawings.

Mortar shall have a minimum compressive strength of 12.5 MPa, and be manufactured from cement, sand, lime, and admixtures, and be accurately measured and mixed in accordance with NZS 4210. Mineral oxide pigment dosages shall be to NZS 4210.

Form all necessary openings, reveals, sills, weepholes, separation and control joints, and cavities to the locations and details shown on the drawings, and in accordance with the requirements of NZBC E2/AS1 and NZS 4210. Install necessary vermin stops. Weatherproof all separation joints to the details shown on the drawings.

Wall tie type, durability, spacing, fixing and installation shall be as defined in NZBC E2/AS1 Tables 18A, 18B, 18C, and NZS 4210.

Install all necessary flashings to openings, and other locations as required, to the details shown on the drawings and in accordance with NZBC E2/AS1 requirements in accordance with details on the working drawings.

On completion or the works leave brickwork clean and free of marks and staining. All brickwork cleaning shall be done to the brick manufacturer's recommendations.
Thoroughly clean all other surfaces affected by the brickworks.

3.3.4 Mortar Pointing

Mortar joints shall be raked out, pointed and tooled to a depth not exceeding 6mm after the initial stiffening has occurred.

KDC - Approved Building Consent Document - BC210208 - Pg 44 of 114 - 2/07/2021 - ComplyNZ

KDC - Approved Building Consent Document - BC210208 - Pg 45 of 114 - 2/07/2021 - ComplyNZ

3.4 Underlay, Foil & DPC

3.4.1 Scope

Supply and install Underlays, Foil and DPC materials, as specified herein, to the locations identified on the drawings, complete with all accessories required for proper installation and performance. All aspects of this work shall be in accordance with the product manufacturer's technical literature and installation requirements, other relevant product manufacturers' recommendations, and as shown on the design drawings.

This specification should be read in conjunction with other relevant specification sections as they are interrelated.

The following is a list and general description of the extent of the Underlays, Foil and DPC works, which are more specifically defined in the contract documents, required for the completion of the contract works:

3.4.2 DPM

3.4.2.1 Polyethylene DPM - Concrete Slab-on-Ground

Concrete Slab-on-Ground Damp Proof Membrane. Minimum 0.25mm (250µm) thick, tear resistant, polyethylene film sheet as per NZS 3604 7.5.6.

Installed as a moisture vapour barrier under concrete slabs on-ground (prior to concreting), over a properly prepared sub-base as required by NZS 3604: 7.5, by a Licensed Building Practitioner (LBP), in accordance with the manufacturer's requirements and as shown on the drawings.

All joins shall be lapped minimum 150mm and continuously sealed with a 48mm wide pressure sensitive PVC jointing tape. Tape-seal around DPM-penetrating pipes and sleeves. Take all reasonable measures to protect the DPM from damage during construction. Inspect DPM immediately before pouring concrete, and repair any perforations or damage in accordance with the manufacturer's instructions.

3.4.3 DPC

3.4.3.1 Bituminous DPC

Bituminous Damp Proof Course. Heavy-weight kraft paper saturated with and coated with high grade bitumen surfaced with talc or other suitable non-stick material, manufactured to AS/NZS 2904 and tested to AS/NZS 4347.0.

Used for separating timber and wood-based products and metal from concrete, masonry, brick, and stone surfaces; or for concealed flashings in masonry veneer cladding to NZBC E2/AS1; in accordance with the manufacturer's requirements and as shown on the drawings. Do not use bituminous DPC under LOSP treated timber materials.

3.4.4 Accessories

3.4.4.1 Joining & Sealing Tape - DPM

Joining & Sealing Tape - for Polyethylene DPM. Minimum 50mm wide, pressure-sensitive, self-adhesive, PVC joining and sealing tape. Used for sealing polyethylene damp proof membrane laps, penetrations, and repairs.

3.4.5 Preparation

3.4.5.1 Under-Slab Basecourse - DPM

Under-Slab Basecourse - prior to installation of DPM concrete underlay, check all aspects of preparatory works, including but not limited to:
- Check that the under-slab basecourse has been correctly laid and compacted as specified.
- Check that the surface has been properly prepared and finished to the required standard, and is smooth and flat.
- Ensure any sand blinding is free of aggregate, sharp protrusions.
- Ensure the final surface is free of hollows and ponded water.

3.4.6 Installation - Under-Slab DPM

3.4.6.1 Under-Slab DPM

Install under-slab damp proof membrane (DPM) in accordance with the manufacturer's requirements and as shown on the drawings.

Unless otherwise specified on the design drawings, under-slab DPM shall be laid in a single layer, over sand blinding, with all edges lapped minimum 150mm and sealed with minimum 50mm wide PVC sealing and joining tape, so as to achieve a continuous waterproof barrier over the entire area.

Seal all pipe, duct, and other services penetrations in the DPM using PVC sealing and joining tape.

Protect installed DPM as required during all stages of slab construction, and avoid puncturing or damaging. Tape-repair damaged DPM as soon as it occurs - tape over small punctures; patch large punctures and damaged areas with a DPM overlay section sealed all sides with PVC tape.

Inspect the DPM for damage just prior to concrete pouring and repair as necessary.

KDC - Approved Building Consent Document - BC210208 - Pg 46 of 114 - 2/07/2021 - ComplyNZ

KDC - Approved Building Consent Document - BC210208 - Pg 47 of 114 - 2/07/2021 - ComplyNZ

4 WATERPROOFING

4.1 Preliminary

Refer to General Conditions of Contract and the Special Conditions in this Specification as appropriate. Read this section in conjunction with all other trade sections.

4.2 Compliance

Comply with the New Zealand Building Code 1992 including all revisions and amendments, Verification Methods where appropriate, and construction principles that are embodied in the Acceptable Solutions.

Comply with all relevant provisions and recommendations of:

3740:2010(AS)	Waterproofing of domestic wet areas
4858:2004(AS/NZS)	Wet area membranes
NZBC B2/AS1	Durability
NZBC E3/AS1	Internal Moisture

4.3 Interior Wet Area Waterproofing Membrane Systems

4.3.1 Scope

Supply and install the specified Interior Wet Area Waterproofing System, to the locations shown on the drawings, complete with all accessories. All aspects of this work shall be in strict accordance with the manufacturer's technical guidelines, installation specifications and details, other relevant product manufacturers' recommendations, and as shown on the drawings.

No substitutions are permitted for the specified Interior Wet Area Waterproofing System.

4.3.2 Waterproofing System

Liquid-Applied Waterproofing Membrane System. A liquid applied, modified polyurethane, high-build acrylic, flexible waterproof membrane, suitable for residential and commercial interior wet area floor and wall applications to be subsequently tiled or otherwise covered and protected.

Installed as an interior wet area undertile waterproofing membrane system in accordance with the manufacturer's requirements, NZBC E3/AS1, AS 3740, and as shown on the drawings.

Brand & Product: Sikalastic Waterproofing Membrane

4.3.3 Co-operation

Co-operate with other trades to ensure that all preliminary and preparatory works are completed to specification and as shown on the drawings.

Coordinate with other trades to install the specified Interior Wet Area Waterproofing System as required.

KDC - Approved Building Consent Document - BC210208 - Pg 48 of 114 - 2/07/2021 - ComplyNZ

4.3.4 Workmanship

All installation work shall be carried out by experienced contractors, authorised by the manufacturer, familiar with the specified products and installation techniques, to fully comply with all of the manufacturer's warranty requirements in accordance with the manufacturer's installation requirements and as noted and detailed on the drawings.

4.3.5 Delivery & Handling

Store products off the ground on a flat surface undercover, keep materials dry and out of direct sunlight, and protect from damage. Do not use damaged or faulty products, or products beyond the designated shelf life. Handle materials and products in accordance with the manufacturer's recommendations.

4.3.6 Installation

Liquid Applied Waterproofing Membrane System. Install the undertile membrane waterproofing system, including surface priming, membrane application, jointing, flashing and sealing etc., and system-supplied accessories in strict accordance with the manufacturer's installation requirements and details, and as shown on the drawings. Application and workmanship shall be in accordance with AS/NZS 4858:2004 and AS 3740:2004.

Substrates shall be free of dust, grease, wax, oil, dirt, loose plaster, laitance, curing compounds, paint and other contaminants likely to prevent proper bonding, and shall be structurally sound, securely fastened and properly supported to eliminate any movement which may cause cracking. Allow proprietary floor levelling compounds and screeds to cure in accordance with the manufacturer's recommendations prior to application.

Seal substrate corner junctions and substrate joints and fixings and visible cracks, with a suitable sealant. Prepare all substrate floor/wall junctions and sheet joints with a system-approved pressure sensitive bond breaker tape. Prime all surfaces with the specified system primer.

Apply the specified liquid-applied membrane undiluted on to a dry and primed substrate uniformly by brush or roller in accordance with the manufacturer's instructions.
Finish the membrane at control joints, floor wastes and drain outlets to the manufacturer's requirements. Consult the manufacturer regarding any detail where a standard system detail does not exist.

Allow to membrane dry in accordance with the manufacturer's requirements. Where required; carry out a full flood test prior to tiling. Protect the installed membrane as required; avoid puncturing or damaging when exposed - repair as necessary

4.3.7 Completion

Check that the internal wet area waterproofing system has been installed correctly, and that any system accessories are correctly installed and finished. Check for damage, repair or replace as necessary.
Leave the completed waterproofing system leak free and watertight.
Leave the working area clean and tidy ready for tiling, remove rubbish from site.

Advise the Main Contractor to protect the completed works from damage until tiling is completed.

Issue to the Owner a copy of the product and installation warranty for the completed works.

KDC - Approved Building Consent Document - BC210208 - Pg 49 of 114 - 2/07/2021 - ComplyNZ

KDC - Approved Building Consent Document - BC210208 - Pg 50 of 114 - 2/07/2021 - ComplyNZ

5 CARPENTRY

5.1 Preliminary

Refer to General Conditions of Contract and the Special Conditions in this Specification as appropriate. Read this section in conjunction with all other trade sections.

5.2 Compliance

Comply with the New Zealand Building Code 1992 including all revisions and amendments, Verification Methods where appropriate, and construction principles that are embodied in the Acceptable Solutions.

Comply with all relevant provisions and recommendations of:

1170.5:2004(NZS)	Structural design actions - Earthquake actions - New Zealand
2588:2018(AS|NZS)	Gypsum plasterboard
2589:2017(AS/NZS)	Gypsum linings - Application and finishing
2785:2000(AS/NZS)	Suspended ceilings - Design and installation
3601:1973(NZS)	Metric dimensions for timber
3602:2003(NZS)	Timber and wood-based products for use in building
3603:1993(NZS)	Timber Structures Standard
3604:2011(NZS)	Timber-framed buildings
3622:2004(NZS)	Verification of timber properties
3631:1988(NZS)	New Zealand timber grading rules
3640:2003(NZS)	Chemical preservation of round and sawn timber
4219:2009(NZS)	Seismic performance of engineering systems in buildings
4600:2018(AS|NZS)	Cold-formed steel structures
AS/NZS 1080.1:2012	Timber - Methods of test - Method 1: Moisture content
AWCI Code of Practice	For Design, Installation and Seismic Restraint of Suspended Ceilings
NASH Standard	Residential and Low-rise Steel Framing - Part 1: Design Criteria
NZBC B2	Durability
NZBC C/AS2-AS6	Protection from Fire
NZBC E3	Internal Moisture
NZBC G6	Airborne and Impact Sound

5.3 General

This section includes the receiving, stacking and storage of all Carpenter's materials and the fabrication, erection and fixing of all framing, sheathings and finishing timbers, including all work incidental to neatly finishing in other trades and all temporary work and temporary bracing.

The Carpenter shall attend upon all trades, and shall supply and fix all obviously necessary but not specifically mentioned fixings and materials.

KDC - Approved Building Consent Document - BC210208 - Pg 51 of 114 - 2/07/2021 - ComplyNZ

5.4 Timber Framing

5.4.1 Scope

Supply and install timber framing to the floors, walls, roofs, and other timber framed elements, as identified and detailed on the drawings. All aspects of this work shall be in accordance with NZS 3604, product manufacturers' recommendations, all specific engineering desgin and as shown on the drawings and the specification.

5.4.2 Workmanship

Where required by the NZ Building Act 2004 it is the building contractor's responsibility to ensure that all restricted building work is carried out by a Licensed Building Practitioner.

All work shall be carried out to current best trade practise by experienced and competent tradesmen, familiar with the materials and installation techniques, in accordance with NZS 3604, other referenced New Zealand Standards within this document and as shown on the drawings.

5.4.3 Timber Framing

5.4.3.1 Timber Grade and Quality

Unless otherwise noted or specified on the drawings or specification, all framing timber shall be minimum structural grade SG 8 Radiata pine in accordance with NZS 3622.
Framing timber shall be seasoned or kiln dried, and be straight and true and free from wind, warp and distortion, and in lengths suitable for the members required, and shall have a moisture content of between 12% and 18% before installation.
Do not used damaged, faulty or defective materials.

5.4.3.2 Timber Treatment

All non-durable timber framing shall be appropriately treated against moisture and/or insect decay by treatment plants with recognised quality assurance systems that are administered by the Timber Preservation Council (NZTPC). Treatment of timber and wood-based building products shall be to the requirements of NZS 3602 as an absolute minimum, and all treated timber shall be identified and marked as required.
Carefully manage treated framing during installation to avoid accidental use of timber with a lower performance or durability treatment than that required or specified.

5.4.3.3 Concrete Separation

Separate timber framing with an approved continuous damp proof course when in direct contact with concrete or masonry. Ensure that the DPC material is compatible with the timber treatment.
Free draining separations to external vertical faces shall be 12mm minimum and as noted on the drawings.

5.4.3.4 Timber Re-treatment

All cut or drilled surfaces of H4 and H5 treated timber framing shall be flood coat re-treated, with a suitable product recommended by the original treatment plant, before installation.

KDC - Approved Building Consent Document - BC210208 - Pg 52 of 114 - 2/07/2021 - ComplyNZ

5.4.3.5 Edge Notching and Centre Holes

The notching, checking, and boring of framing members shall be in strict accordance with the requirements of NZS 3604.

Avoided checking and cutting where possible and keep to such dimensions so as not to prejudice the purpose for which the member is used. Keep edge notching to a minimum and where possible use centrally bored holes instead.

Concealed services pipes and wiring shall not project beyond the framing face and where possible shall be beyond the lining's fixing reach.

5.4.3.6 Built-up Framing Members

Except for jack studs, bottom plates and top plates, framing members may be substituted with built-up members in accordance with the limitations of NZS 3604 2.4.4.7 with the prior approval of the Designer or Franchisee only.

5.4.4 Steel Fixings

5.4.4.1 Fastenings and Connectors

Unless otherwise noted or specified, timber framing fastenings and connectors shall be as specified in the relevant fixing schedules of NZS 3604 or have an equivalent capacity as specified therein. Timber framing connectors and fixings shall comply with the product information as required in NZS 3604 2.4.6, and shall be used and installed in accordance with the manufacturer's recommendations. Pre-drill nail holes in split-prone framing as necessary.

5.4.4.2 Durability of Fixings & Fastenings

Unless otherwise noted or specified, the minimum durability of timber framing fixings and fastenings, excluding nails and screws, shall comply with the durability requirements of NZS 3604 Table 4.1.

Galvanised steel fixing components, excluding nails and screws, shall have galvanised coating masses in accordance with NZS 3604 Table 4.2.

Unless noted or specified otherwise, the materials for nails and screws shall be as given in NZS 3604 Table 4.3.

Steel fixings and fastenings in contact with timber treated with copper based timber preservatives (H3.2 or higher) shall be in accordance with NZS 3604 4.4.4.

Stainless steel nails shall be minimum Grade 304 unless otherwise specified or noted.

5.4.5 Wall Framing

5.4.5.1 Plates

Top and bottom plates shall be to the dimensions and layout shown on the drawings. Unless specified or shown otherwise, top and bottom plates shall be fixed in accordance with NZS 3604 7.5.12 and Tables 8.18 and 8.19, true to line and level or angle.

Joints in top plates shall be made over a stud or over blocking between studs, and all top plate connections shall be in accordance with NZS 3604 8.7.3. Form all holes and edge notches in top and bottom plates in accordance with NZS 3604 8.7.5.

KDC - Approved Building Consent Document - BC210208 - Pg 53 of 114 - 2/07/2021 - ComplyNZ

5.4.5.2 Studs

Studs shall be to the dimensions and spacings shown on the drawings, and installed true to line and plumb in both directions between top and bottom plates.
Unless noted otherwise, non-load bearing wall studs shall be to the spacings given in NZS 3604 Table 8.4, stud width as shown on the drawings.
Form all holes and edge notches in studs in accordance with NZS 3604 8.5.1.5. Do not notch, check, cut, or bore holes in the middle third of any trimming stud.
Should the need arise, studs shall be straightened in accordance with NZS 3604 8.5.3 with prior approval from the Architect/Designer only.

Unless noted otherwise, studs in loadbearing walls for 3 kPa floor loads shall be in accordance with NZS 3604 Table 14.10.

5.4.5.3 Lintels

Lintels shall be to the dimensions and locations shown on the drawings, and installed true to line and level, and shall be supported by a 45mm thick doubling stud or jack stud fixed to a trimming stud, and secured against uplift in accordance with NZS 3604 8.6.1.8 as required or as specified in the working drawings.
The thickness of a lintel may be made from two or more members, where each member is the length of the lintel, in accordance with NZS 3604 2.4.4.7.

5.4.5.4 Sill & Head Trimmers

Unless specified or shown otherwise, sill and head trimmers to openings shall be the same width as the wall stud and to the thickness given in NZS 3604 Table 8.15, and installed at the required opening height true to line and level, and supported by a 45mm thick doubling stud or jack stud fixed to a trimming stud.

5.4.5.5 Dwangs

Dwangs shall be the same width and thickness as the wall stud, and installed at the centres noted on the drawings, and accurately cut and fixed in place true to line and level and flush with stud edges.
Dwangs fixed in accordance with NZS 3604 Table 8.19.

5.4.6 Roof Framing

5.4.6.1 Verandah Beams

Verandah beams shall be to the dimensions and locations shown on the drawing and installed true to line and level. Unless shown otherwise, all verandah beam jointing and connections to timber posts shall be in accordance with NZS 3604 Table 9.2 and the approved building consent documents.

5.4.6.2 Valley Boards

Valley boards shall be sized to the dimensions and installed to the supporting framing as detailed on the drawings.

KDC - Approved Building Consent Document - BC210208 - Pg 54 of 114 - 2/07/2021 - ComplyNZ

5.4.6.3 Tile Battens

Tile battens shall be to the dimensions and spacings shown on the drawings and to suit the roofing tiles, and fixed to rafters and/or trusses in accordance with NZS 3604 Table 10.12. Tile battens shall be continuous over a minimum of two spans.

5.4.6.4 Roof Trusses

Roof trusses shall be Specific Engineering Design (SED) in accordance with NZBC B1/VM1 and manufactured by an accredited fabricator, and shall comply with all aspects of NZS 3604 10.2.2. Roof trusses shall be fabricated to meet the specific design requirements of the roof including, but not limited to; roof layout, pitch, and details, in accordance with the drawings and specification.
Roof trusses shall be supported and fixed to the truss fabricator's specifications but shall be no less than that required by NZS 3604 Tables 10.14 and 10.15. Roof trusses shall be braced as shown on the drawings and in accordance with NZS 3604 10.3.

5.4.6.5 Roof Bracing

Roof bracing shall be as shown on the drawings and in accordance with NZS 3604 10.3 and 10.4 as necessary.

5.5 GIB® Rondo® Metal Batten Systems

5.5.1 Scope

Supply and install the specified GIB® Rondo® Metal Batten Systems to the locations identified on the drawings, incorporating all system components and accessories required for proper installation and performance. All aspects of this work shall be in complete accordance with the GIB® Rondo® Metal Batten Systems - System and Installation Manual publication and the current GIB® Site Guide (check www.gib.co.nz, or call 0800 100 442 for the latest editions), other relevant product manufacturers' recommendations, and as shown on the drawings.

No substitutions are permitted for GIB® Rondo® Metal Batten Systems.

This specification section should be read in conjunction with the GIB® Plasterboard Linings specification and relevant GIB® Systems specifications, and other specification sections, as they are interrelated.

For the purpose of this specification, the GIB® Rondo® Metal Batten Systems - System and Installation Manual publication is referred to as the 'GIB® Rondo® Metal Batten Systems Manual'.

5.5.2 GIB® Rondo® Metal Batten Systems

5.5.2.1 GIB® Rondo® NZ31 Ceiling Batten System

GIB® Rondo® NZ31 Ceiling Batten System. Incorporating 16mm deep, concealed metal ceiling battens that are fixed directly to the support frame.

Installed with all system components and accessories required for proper installation and performance, in accordance with the GIB® Rondo® Metal Batten Systems Manual, to the locations, layout, levels and details shown on the drawings.

Suitable for 10mm, 13mm, 16mm and 19mm thick GIB® plasterboard ceiling linings for residential and commercial applications. Plasterboard ceiling linings are generally screw-fixed directly to the underside of the ceiling battens.

GIB® Rondo® System Components:
- NZ31 Batten: 16mm deep, galvanised steel furring channel (batten).
- 142 Perimeter Channel: 16mm deep, galvanised steel perimeter 'U' channel.
- NZ18 Perimeter Angle: 32 x 32mm, galvanised steel perimeter angle.
- 226 Clip: 90mm long, galvanised steel batten fastening clip. Provides 30mm max. clearance from supporting joist or truss.
- 394 Long Clip: 190mm long, galvanised steel batten fastening clip. Provides 130mm max. clearance from supporting joist or truss.
- STWC Acoustic Clip (ST001): Galvanised steel, resilient mount, acoustic batten fastening clip.
- 138 Jointer: Galvanised steel batten jointing clip.

Where electrical earthing of GIB® Rondo® NZ31 Ceiling Batten System is required the electrical earthing shall be carried out by a qualified electrician in accordance with the electrical standards and regulations.

5.5.3 Co-operation

Co-operate with other trades to ensure that all preliminary and preparatory works are completed to specification and as shown on the drawings.

Coordinate with other trades to ensure that the GIB® Rondo® Metal Batten System correctly allows for ceiling lining installation, and for the locations of recessed lights and other fittings installed by others, and to install GIB® Rondo® Metal Batten Systems as required.

5.5.4 Workmanship

Where required by the NZ Building Act 2004, it is the building contractor's responsibility to ensure that all restricted building work is carried out by a Licensed Building Practitioner.

Installation of GIB® Rondo® Metal Batten Systems shall be carried out by experienced and competent tradespersons, who are familiar with the specified systems and installation techniques, in accordance with the GIB® Rondo® Metal Batten Systems - System and Installation Manual, to fully comply with all warranty requirements, and relevant requirements of AS/NZS 2785 (suspended systems). Submit evidence of experience on request, e.g. National Certificate of Interior Systems, or Certified Business Member of AWCINZ.

All cutting, jointing, fixing and supporting techniques shall be exactly as recommended by the manufacturer. All work shall be such as to leave a neat, efficient and robust installation, to the required standard, free from damage and defects.

5.5.5 Delivery & Handling

Store all materials and accessories indoors, off the floor, on a flat, level surface in accordance with the manufacturer's requirements. Keep materials and accessories dry and protected from damage, distortion, moisture and contamination at all times.

KDC - Approved Building Consent Document - BC210208 - Pg 55 of 114 - 2/07/2021 - ComplyNZ

Do not use damaged or defective materials and products.

Handle all materials in accordance with the manufacturer's requirements and Product Data Sheets, and in a manner that prevents damage and distortion to the component.

Installers shall be familiar with and comply with the manufacturer's Material Safety Data Sheet precautions for use, and use appropriate safety gear when handling materials.

Installers shall conform with all relevant WorkSafe NZ Guidelines and Codes of Practice - including the OSH Guidelines For the Provision of Facilities and General Safety in the Construction Industry.

5.5.6 Completion

Carry out a final inspection immediately after installation. Check that the GIB Rondo Metal Batten System has been installed correctly in accordance with the GIB® Rondo® Metal Batten Systems Manual and installation tolerances, to the correct set-out and details shown on the drawings, and that the installations are accurately aligned true to line, level (and/or plumb) and plane.

Check that the installed layout allows for the correct positioning and installation of all penetrations and services fixtures and fittings as indicated on the drawings.

Check for any damage and defective work - repair or replace as necessary to the required standard.

Leave all of this work complete and to the required standard in accordance with the manufacturer's warranty requirements, as shown on the drawings.

Leave completed works and surrounding surfaces clean and free of rubbish and debris. Remove all rubbish and excess material from the site.

Issue to the Owner a copy of the a copy of the GIB® Product and System Warranty.

5.6 GIB® Plasterboard Linings

5.6.1 Scope

Supply and install GIB® Plasterboard Linings specified herein, as sheet lining materials to the walls, ceilings and other elements identified on the drawings, complete with all accessories required for proper installation, finishing and performance. All aspects of this work shall be in complete accordance with the current GIB® Site Guide and relevant GIB® Systems literature (check www.gib.co.nz, or call 0800 100 442 for the latest editions), and other relevant product manufacturers' recommendations.

No substitutions are permitted for GIB® Plasterboard Linings, GIB® Systems or GIB® System components and accessories.

KDC - Approved Building Consent Document - BC210208 - Pg 56 of 114 - 2/07/2021 - ComplyNZ

This specification must be read in conjunction with relevant GIB® Systems specifications - GIB® EzyBrace® Systems, GIB® Aqualine® Wet Area Systems, and GIB® Rondo® Metal Batten Systems - and other specifications sections, as they are interrelated.

5.6.2 Requirements

5.6.2.1 Warranty

GIB® Product & System Warranty:

GIB Systems Durability.
The following systems have, unless stated otherwise in GIB® technical literature, a serviceability life in excess of that stated and satisfy the requirements of NZBC Clause B2 Durability:

15 Years:
- GIB Aqualine® Wet Area Systems.

50 Years:
- GIB EzyBrace® Systems

Provide the GIB® Product & System Warranty on the manufacturer's standard warranty form.
Commence the warranty from the date of practical completion of the contract works.

Include with the warranty: a copy of the completed GIB® Installation Sign-Off sheet, and the GIB® Plasterboard Lining Systems Care and Maintenance bulletin.

5.6.2.2 Quality Assurance

Ensure that the installation and finishing of GIB® Plasterboard Linings and associated GIB® Systems comply in all respects with the approved design drawings and specifications, and Building Consent.

Maintain and comply with industry-recognised quality control and assurance procedures to ensure that all stages of work are carried out to the highest standard.

5.6.2.3 Defective Materials & Work

Should defective materials and/or work be found at any time before the final acceptance of the work, it shall be rejected. Rejected GIB® Plasterboard Linings and GIB® Systems materials and work shall be repaired and/or replaced to the satisfaction of the Architect/Designer, without delay and at no additional cost to the Principal.

5.6.2.4 Substitution of GIB® Plasterboard Linings

GIB® plasterboard linings shall be as specified herein and as indicated on the approved drawings. The substitution of GIB® branded plasterboard linings and GIB® System components for alternative brands is not permitted under any circumstances.

The substitution of a specified GIB® plasterboard lining for an alternative GIB® plasterboard lining by the Contractor shall be in strict accordance with the requirements of the GIB® Site Guide: 2.3 - Board Substitution Options, and relevant GIB® Systems literature. Such substitutions shall only be permitted with the Architect's/Designer's written authorisation, and shall be at no additional cost to the

KDC - Approved Building Consent Document - BC210208 - Pg 57 of 114 - 2/07/2021 - ComplyNZ

Principal. Should any resultant extra work and/or redesign work be required to accommodate alternative GIB® Plasterboard Linings to satisfy design, performance and compliance requirements, then the cost of these shall be borne by the Contractor.

5.6.3 Performance

5.6.3.1 Bracing Performance - Timber Framing

Bracing Performance - GIB EzyBrace® Systems - Timber Framing. To the timber framed elements noted as 'Bracing' on the drawings, additionally comply with all relevant aspects of the GIB EzyBrace® Systems (2016) publication and GIB Ezybrace® Bracing Software according to the specified bracing unit rating, BRANZ Appraisal No.928 (2016), and other relevant product manufacturers' recommendations. Refer to separate specification GIB EzyBrace® Systems.

5.6.3.2 Wet Areas

Wet Area Plasterboard Linings - GIB Aqualine® Wet Area Systems. To the areas noted as 'Wet Area' on the drawings, additionally comply with all relevant aspects of the GIB Aqualine® Wet Area Systems (2007) publication, BRANZ Appraisal No.427 (2007), and other relevant product manufacturers' recommendations. Refer to separate specification GIB Aqualine® Wet Area Systems.

5.6.4 GIB® Plasterboard Linings

5.6.4.1 GIB® Standard Plasterboard, 10mm

GIB® Standard Plasterboard, 10mm. A 10mm thick standard plasterboard interior lining. Suitable for use in residential and commercial applications on walls. Manufactured to exceed the requirements of AS/NZS 2588. Refer to the GIB® Site Guide.

Installed Location: General Walls (Excluding specific braced elements or 'wet areas')

5.6.4.2 GIB® Standard Plasterboard, 13mm

GIB® Standard Plasterboard, 13mm. A 13mm thick standard plasterboard interior lining. Suitable for use in residential and commercial applications on walls and ceilings. Manufactured to exceed the requirements of AS/NZS 2588. Refer to the GIB® Site Guide.

Installed Location: General Ceilings (Other than 'wet areas')

5.6.4.3 GIB Braceline® & GIB Noiseline®, 10mm

GIB Braceline® & GIB Noiseline®, 10mm. A 10mm thick dual purpose plasterboard interior lining, with a high-density core for extra bracing and noise control performance. Suitable for use in residential and commercial applications on walls and ceilings where increased bracing and noise control performance is required. Manufactured to exceed the requirements of AS/NZS 2588. Refer to the GIB® Site Guide.

Installed Location: Refer to Bracing Plan for locations or Braceline

5.6.4.4 GIB Aqualine®, 10mm

GIB Aqualine®, 10mm. A 10mm thick moisture resistant plasterboard interior lining, with a water resistant polymer impregnated core to help prevent moisture penetration. Suitable for use in

KDC - Approved Building Consent Document - BC210208 - Pg 58 of 114 - 2/07/2021 - ComplyNZ

residential and commercial applications on walls and ceilings in spaces at risk from water or moisture damage. Manufactured to exceed the requirements of AS/NZS 2588. Refer to the GIB® Site Guide.

Installed Location: Walls Generally in 'Wet Areas'

5.6.4.5 GIB Aqualine®, 13mm

GIB Aqualine®, 13mm. A 13mm thick moisture resistant plasterboard interior lining, with a water resistant polymer impregnated core to help prevent moisture penetration. Suitable for use in residential and commercial applications on walls and ceilings in spaces at risk from water or moisture damage. Manufactured to exceed the requirements of AS/NZS 2588. Refer to the GIB® Site Guide.

Installed Location: Bathroom Ceilings

5.6.5 Co-operation

Co-operate with other trades to ensure that all preliminary and preparatory works are completed to specification and as shown on the drawings.
Co-operate with the Decorator to ensure that the specified Finish Levels for plasterboard jointing and finishing is achieved before decorating commences.

Coordinate with other trades to install GIB® Plasterboard Linings as required, and to ensure that:
- appropriate tolerances and clearances allow for adjacent internal linings, fixtures, fittings, services, etc; and
- the linings correctly allow for proper door and window installation; and
- penetrations for building services are correctly handled to maintain sheet integrity and system performance.

5.6.6 Workmanship

Where required by the NZ Building Act 2004, it is the building contractor's responsibility to ensure that all restricted building work is carried out by a Licensed Building Practitioner.

Installation and finishing work of GIB® Plasterboard Linings shall be carried out by qualified and experienced tradespersons, familiar with the specified materials and installation and finishing techniques, in accordance with the GIB® Site Guide and the relevant GIB® product technical literature, and to fully comply with all warranty requirements. Submit evidence of experience on request, e.g. National Certificate of Interior Systems, or Certified Business Member of AWCINZ.

GIB® Plasterboard Linings shall be jointed and finished to the specified Finish Levels in accordance with AS/NZS 2589 and GIB® Site Guide. Make all necessary arrangements for the quality assessment of plasterboard jointing and finishing Finish Levels prior to commencing decorating.

All cutting, fixing, jointing, finishing and sealing techniques shall be exactly as recommended by the manufacturer. All work shall be such as to leave a neat, efficient and robust installation, to the required standard and free from damage and defects.

Protect surrounding surfaces and areas from jointing compound splashes and sanding dust.

KDC - Approved Building Consent Document - BC210208 - Pg 59 of 114 - 2/07/2021 - ComplyNZ

KDC - Approved Building Consent Document - BC210208 - Pg 60 of 114 - 2/07/2021 - ComplyNZ

5.6.7 Delivery & Handling

Store GIB® Plasterboard Linings indoors, in neat, flat stacks off the floor, in dry conditions and without any sagging or distortion, in accordance with the GIB® Site Guide. Keep plasterboard linings, compounds and accessories dry, out of direct sunlight, and protected from damage, moisture and contamination at all times.

Do not use damaged or defective materials and products, or products that are beyond the designated shelf life.

Should a problem be encountered with any GIB® product during installation or delivery, immediately contact the GIB® Helpline on 0800 100 442. Do not continue to use the product that is not performing to specification or expectation. Keep samples of the product in question and where possible, document batch numbers and/or manufacturing dates.

Handle all products and materials in accordance with the manufacturer's requirements and relevant Product Data Sheets and GIB® Site Guide, and in a manner that prevents damage. Carry plasterboard sheets on edge, and avoid damage to sheet edges, ends, and surfaces.

Installers shall be familiar with and comply with the requirements of the GIB® Site Guide precautions for use, and use appropriate safety gear when handling materials.

Installers shall conform with all relevant WorkSafe NZ Guidelines and Codes of Practice - including the OSH Guidelines For the Provision of Facilities and General Safety in the Construction Industry.

5.6.8 Installation

5.6.8.1 Standard Ceiling Fixing - Metal Ceiling Battens

GIB® Plasterboard Ceiling Linings - Standard Ceiling Fixing with Metal Ceiling Battens. Metal ceiling battens shall be from the GIB® Rondo® Metal Batten Systems - refer to separate specification GIB® Rondo® Metal Batten Systems.

Unless independently supported, uniformly distributed loads (fixtures and fittings and/or overlaid insulation) supported by GIB® plasterboard ceiling linings shall not exceed 3.0 kg/m².

Metal ceiling batten spacings shall be shall be as given in the GIB® Site Guide according to the specified plasterboard thickness - 450mm for 10mm thickness. Ceiling battens shall all run in the same direction within the ceiling area. In no case shall ceiling battens be continuous over movement control joints in the structure.

Install GIB® Plasterboard sheets right angles to ceiling battens, with sheet end-joints staggered minimum 600mm and located off battens and back-blocked. Fully support sheets during positioning and fixing - for ceiling installations, the use of a mechanical lifting machine is recommended.

Plasterboard sheets shall be fixed to ceiling battens in conjunction with GIBFix® adhesive applied at maximum at 200mm centres. Do not apply adhesive at sheet edges or within 200mm of fasteners. Firmly press the plasterboard where adhesive has been applied to ensure full contact.

Fix sheets to timber ceiling battens with GIB® Grabber® Self Tapping Screws in accordance with GIB® Site Guide fastener schedule according to the plasterboard thickness. Position fasteners no closer than 12mm from a tapered edge or 18mm from a cut sheet edge.

Install all necessary paper-faced metal beads, casing beads, shadow and reveal beads and other edge trims to plasterboard corners and edges as necessary and as detailed on the drawings.

Form movement control joints to the locations and details shown on the approved drawings. Where not indicated on the drawings, movement joints shall be positioned at maximum 12m intervals in both directions on any single ceiling, and where there is a change in ceiling lining material, and shall coincide with the junctions between adjoining spaces.

Accommodate recessed light fittings, heating and ventilating diffusers and grilles and other utility fixtures and fittings that penetrate the ceiling lining.

5.6.8.2 Jointing & Finishing

Joint and finish GIB® Plasterboard Linings with GIB® joint and finishing compounds appropriate for the plasterboard type and durability, and the finish level required. Refer to Joint & Finishing Compounds clause.

Carry out jointing and finishing according to the specified Finish Level in accordance with the GIB® Site Guide and GIB® Compounds brochure. Reinforce sheet joints and internal corners with joint tape or paper-faced trim embedded into the Taping (first) Coat.

Sheet joints, internal and external corners, and fastener heads shall be evenly finished with GIB® compounds. When dry, lightly sand to a smooth finish with 220 grit sandpaper or drywall sanding screen to remove tool marks, ridges and other imperfections prior to subsequent sealing and decorating.

5.6.9 Completion

Check that GIB® Plasterboard Linings have been installed in accordance with the GIB® Site Guide and GIB® Systems literature, and are finished to the specified finish levels.

Check for any damage and defective work - repair or replace as necessary to the required standard.

Ensure that inspection and assessment of the plasterboard Finish Level has been carried out, and that written agreement stating the completed jointing and finishing is acceptable for subsequent surface sealing and decoration has been provided.

Ensure that the GIB® Installation Sign-Off Certificate has been completed and signed by the Interior Plasterer/Stopper.

KDC - Approved Building Consent Document - BC210208 - Pg 61 of 114 - 2/07/2021 - ComplyNZ

Leave all of this work complete and to the required standard in accordance with the manufacturer's warranty requirements, as shown on the drawings and the conditions of the Building Consent.

Clean up thoroughly and leave the finished work and surrounding surfaces clean and free of contamination from compound splashes and dust. Remove all associated rubbish and excess material from the site.

Issue to the Owner a copy of the GIB® Plasterboard Lining Systems Care and Maintenance bulletin, and a copy of the GIB® Product and System Warranty.

Preparation and painting (by others) of GIB® Plasterboard Linings shall be carried out in accordance with AS/NZS 2311 and with the paint manufacturer's recommendations.

Preparation, including application of under-tile waterproofing membranes, and tiling (by others) of GIB® Plasterboard Linings shall be carried out in accordance with AS 3589.1 and the BRANZ Good Practice Guide: Tiling.

5.7 GIB Aqualine® Wet Area Systems

5.7.1 Scope

Supply and install the specified GIB Aqualine® Wet Area Systems to the locations identified on the drawings, incorporating GIB® plasterboards and all system components and accessories required for proper installation and performance. All aspects of this work shall be in complete accordance with the GIB Aqualine® Wet Area Systems (2007) publication and the current GIB® Site Guide (check www.gib.co.nz, or call 0800 100 442 for the latest editions), BRANZ Appraisal No.427 (2007), other relevant product manufacturers' recommendations, and as shown on the drawings.

No substitutions are permitted for GIB Aqualine® Wet Area Systems, GIB® Plasterboard Linings, or GIB® System components and accessories.

This specification section must be read in conjunction with the GIB® Plasterboard Linings specification and relevant GIB® Systems specifications, and other specification sections, as they are interrelated.

For the purpose of this specification, the GIB Aqualine® Wet Area Systems (2007) publication is referred to as the GIB® Wet Area Systems Manual.

5.7.2 GIB Aqualine® Non-Tiled Wall Systems

5.7.2.1 Non-Tiled Walls - Timber Frame

GIB Aqualine® Wet Area Systems - Non-Tiled Walls - Timber Framing. A timber frame, wet area lining system for non-tiled walls incorporating one layer of 10mm or 13mm GIB Aqualine® on the wet area side. Refer to the GIB® Aqualine® Systems literature.

KDC - Approved Building Consent Document - BC210208 - Pg 62 of 114 - 2/07/2021 - ComplyNZ

KDC - Approved Building Consent Document - BC210208 - Pg 63 of 114 - 2/07/2021 - ComplyNZ

5.7.3 GIB Aqualine® Tiled Wall Systems

5.7.3.1 Tiled Walls (tile weight - max. 20kg/m²) - Timber Frame

GIB Aqualine® Wet Area Systems - Tiled Walls - Timber Frame. A timber frame, wet area lining system for tiled walls with a maximum tile weight of 20kg/m², incorporating one layer of 10mm or 13mm GIB Aqualine® on the wet area side. Refer to the GIB® Wet Area Systems literature.

5.7.3.2 Tiled Walls (tile weight - 20-32kg/m²) - Timber Frame

GIB Aqualine® Wet Area Systems - Tiled Walls - Timber Frame. A timber frame, wet area lining system for tiled walls with a tile weight between 20-32kg/m², incorporating one layer of 13mm GIB Aqualine® on the wet area side. Refer to the GIB® Wet Area Systems literature.

5.7.4 GIB Aqualine® Ceiling Systems

5.7.4.1 Metal Ceiling Battens

GIB Aqualine® Wet Area Systems - Ceilings - Metal Ceiling Battens. A wet area drywall ceiling lining system over metal ceiling battens incorporating one layer of 13mm GIB Aqualine®. Refer to the GIB® Wet Area Systems literature.

5.7.5 Co-operation

Co-operate with other trades to ensure that all preliminary and preparatory works are completed to specification and as shown on the drawings.
Co-operate with the Decorator to ensure that the specified Finish Levels for plasterboard jointing and finishing is achieved before decorating commences.

Coordinate with other trades to install GIB Aqualine® Wet Area Systems to the required set-out and standard, and to ensure:
- appropriate tolerances and clearances allow for adjacent internal linings, fixtures, fittings, services, etc; and
- GIB® plasterboard linings correctly allow for proper door and window installation; and
- penetrations for building services are correctly handled to maintain sheet integrity and system performance.

5.7.6 Workmanship

Where required by the NZ Building Act 2004, it is the building contractor's responsibility to ensure that all restricted building work is carried out by a Licensed Building Practitioner.

Installation of GIB Aqualine® Wet Area Systems shall be carried out by experienced and competent tradespersons, who are familiar with the specified materials and installation techniques, in accordance with the manufacturer's installation requirements, and to fully comply with all warranty requirements. Submit evidence of experience on request, e.g. National Certificate of Interior Systems, or Certified Business Member of AWCINZ.

Carry out all necessary installation inspections in accordance with the GIB® Wet Area Systems Manual and the GIB® Site Guide, and to fully comply with the manufacturer's warranty requirements as the works progress.

All cutting, jointing, fixing and sealing techniques shall be exactly as recommended by the manufacturer. All work shall be such as to leave a neat, efficient and robust installation, to the required standard, free from damage and defects.

Make all necessary provisions to protect adjacent work and surfaces from damage during installation.

5.7.7 Delivery & Handling

Store all GIB Aqualine® Wet Area Systems plasterboard linings and system components indoors, off the floor, on a flat, level surface in accordance with the manufacturer's requirements. Keep stored plasterboard linings and system accessories dry, out of direct sunlight, and protected from damage, moisture and contamination at all times.

Do not use damaged or defective materials and products, or products that are beyond the designated shelf life. Cracked or damaged GIB Aqualine® sheets must never be used.

Should a problem be encountered with any GIB® product during installation or delivery, immediately contact the GIB® Helpline on 0800 100 442. Do not continue to use the product that is not performing to specification or expectation. Keep samples of the product in question and where possible, document batch numbers and/or manufacturing dates.

Handle all materials in accordance with the manufacturer's requirements and relevant Product Data Sheets, and in a manner that prevents damage.

Installers shall be familiar with and comply with the manufacturer's Material Safety Data Sheet precautions for use, and use appropriate safety gear when handling materials. Carry plasterboard sheets on edge, and avoid damage to sheet edges, ends, and surfaces.

Installers shall conform with all relevant WorkSafe NZ Guidelines and Codes of Practice - including the OSH Guidelines For the Provision of Facilities and General Safety in the Construction Industry.

KDC - Approved Building Consent Document - BC210208 - Pg 64 of 114 - 2/07/2021 - ComplyNZ

6 ALUMINIUM JOINERY

6.1 Preliminary

Refer to General Conditions of Contract and the Special Conditions in this Specification as appropriate. Read this section in conjunction with all other trade sections.

6.2 Compliance

Comply with the New Zealand Building Code 1992 including all revisions and amendments, Verification Methods where appropriate, and construction principles that are embodied in the Acceptable Solutions.

Comply with all relevant provisions and recommendations of:

1170.2:2011(AS/NZS)	Structural design actions - Wind actions
1170.3:2003(AS/NZS)	Structural design actions - Snow and ice actions
1170.5:2004(NZS)	Structural design actions - Earthquake actions - New Zealand
2208:1996(AS/NZS)	Safety glazing materials in buildings
3504:1979(NZS)	Specification for aluminium windows
3602:2003(NZS)	Timber and wood-based products for use in building
4211:2008(NZS)	Specification for performance of windows
4218:2009(NZS)	Thermal insulation - Housing and small buildings
4223.1:2008(NZS)	Code of practice for glazing in buildings - Glass selection and glazing
4223.2:2016(NZS)	Glazing in buildings - Part 2: Insulating glass units
4223.3:2016(NZS)	Glazing in buildings - Part 3: Human impact safety requirements
4223.4:2008(NZS)	Glazing in buildings - Part 4: Wind, dead, snow, and live actions
4284:2008(AS/NZS)	Testing of building facades
4667:2000(AS/NZS)	Quality requirements for cut-to-size and processed glass
4668:2000 (AS/NZS)	Glossary of terms used in the glass and glazing industry
AS/NZS 4666:2012	Insulating glass units
NZBC B2	Durability
NZBC E2	External moisture
NZBC F2	Hazardous Building Materials
NZBC F4/AS1	Safety from falling
NZBC H1	Energy Efficiency
WANZ	SFA 3503-03:2005 Anodising Standard
WANZ (PQAS)	Powder Coating Quality Assurance System (PQAS)

KDC - Approved Building Consent Document - BC210208 - Pg 65 of 114 - 2/07/2021 - ComplyNZ

KDC - Approved Building Consent Document - BC210208 - Pg 66 of 114 - 2/07/2021 - ComplyNZ

6.3 Aluminium Windows & Doors from APL Window Solutions

6.3.1 Scope

Supply and install the specified Aluminium Windows and Doors manufactured by First™ Windows & Doors to the locations and details shown on the drawings; complete with all components (flashings, support mechanisms, brackets, etc) where required, for proper installation and operation; and commissioned to the required performance and functionality. All aspects of this work shall be in strict accordance with the manufacturer's technical literature and installation requirements (check www.firstwindows.co.nz, call 07 849 888, or email techinfo@aplnz.co.nz for the latest editions), other relevant product manufacturers' recommendations, and as shown on the drawings.

No substitutions are permitted for the specified Aluminium Windows and Doors from First™ Windows & Doors.

For the purpose of this specification, First™ Windows & Doors shall be referred to henceforth as APL - Window Solutions or APL.

6.3.2 Performance Criteria

6.3.2.1 Thermal Performance - Climate Zone 1

Thermal Performance. The specified APL Aluminium Window and Door Systems joinery installation is located within the boundaries of Climate Zone 1 as defined by NZS 4218. Unless specified otherwise below, the combination of glazing and specified window/door frame shall have a minimum required R-Value of R-0.26 in accordance with NZS 4218 for this Climate Zone.

Required R-Value: R0.15

6.3.3 APL Alumnium Joinery Range

6.3.3.1 Residential Series

'Residential Series' Windows and Doors, fully glazed, finished, and complete with hardware and other specified components - all as specified in the following clauses. Manufactured and installed in accordance with the manufacturer's requirements to the locations, configurations and details shown on the drawings and schedules.

6.3.4 Glazing

6.3.4.1 Standard Double Glazing

Standard Double Glazing. Air-filled and sealed insulating glass units (IGUs); with clear float glass in accordance with NZS 4223.1 and NZS 4223.3. Double glazed IGUs shall be manufactured and installed in accordance with AS/NZS 4666. Factory-fitted to awning and/or casement windows, sliding and/or bi-fold windows, hinged and/or sliding doors as identified on the drawings and schedules.

6.3.5 Co-operation

Co-operate with other trades to ensure that all preliminary and preparatory works are completed to specification and as shown on the drawings.

Coordinate with other trades to establish exact sizes for all aluminium window and door frames; and to ensure that each element correctly allows for the installation and finishing of exterior claddings and interior linings and any specific detailing shown on the drawings; and generally to install all APL aluminium windows, doors and accessories as required.

KDC - Approved Building Consent Document - BC210208 - Pg 67 of 114 - 2/07/2021 - ComplyNZ

6.3.6 Workmanship

Where required by the NZ Building Act 2004 it is the building contractor's responsibility to ensure that all restricted building work is carried out by a Licensed Building Practitioner.

Aluminium window and door joinery fabrication, assembly and installation work shall be carried out by experienced and competent tradespersons, authorised to manufacture and install APL - Window Solutions aluminium windows and doors, under controlled supervision and procedures, to fully comply with all warranty requirements and in accordance with the manufacturer's requirements.

Maintain and comply with industry-recognised quality control and assurance procedures to ensure that all stages of work are carried out to the highest standard.

All fabrication and assembly processes and techniques, materials and accessories shall be exactly as recommended by the manufacturer and shall be carried out using suitable machinery, tools and equipment, in a factory workshop.

All work shall be such as to leave a neat, efficient, robust and weathertight installation.

Leave aluminium joinery and glazing clean and free from damage and defects of any kind.

6.3.7 Delivery & Handling

Aluminium joinery frames shall be braced and restrained as necessary for transportation and delivery to site. All surfaces, including glass, shall be appropriately protected from marking and damage during manufacture, delivery and installation.

Inspect all aluminium joinery units upon delivery and reject any damaged or defective items. Contact the manufacturer for replacement of rejected items at time of delivery to site. Do not use or install damaged or defective materials, products and joinery elements.

Store aluminium windows, doors and accessories undercover, off the floor, on a flat, even and level surface as recommended by the manufacturer and in a manner that prevents any frame distortion and surface damage and deterioration. Keep stored aluminium joinery dry and protected from damage, moisture and contamination at all times.

Handle aluminium joinery units and accessories in accordance with the manufacturer's requirements and in a manner that prevents distortion to joinery frames and any damage to the elements - including surface marking. Retain manufacturer's protective coverings for as long as possible, and remove them upon completion.

Installers shall be familiar with and comply with the manufacturer's safe handling requirements and precautions for use, and shall use appropriate safety gear and equipment during all stages of manufacture and installation.

Installers shall conform with all relevant WorkSafe NZ Guidelines and Codes of Practice - including the Best practice guidelines for working at height in NZ, and the OSH Guidelines For the Provision of Facilities and General Safety in the Construction Industry.

6.3.8 Completion

Check that APL aluminium window and door joinery and accessories have been installed, glazed and finished correctly and fully tested for weathertightness.
Check that all opening window sashes, doors, sliding carriage assemblies and all moving components have been commissioned to the required operating performance and functionality.
Check that all hardware, locks, latches and handles are firmly fixed in place without restricting the operation of their moving parts, and that latches and locks fully engage with strikes and keepers and are free of slack when engaged.

Check all aluminium joinery elements for damage, defects, faults and weathertightness - carry out repairs and/or replace elements as necessary in accordance with the manufacturer's instructions to the required standard.

Remove applied safety indicators and protective coverings, and clean all joinery surfaces inside and out and leave perfectly clean.

Leave this work complete, weathertight and leak-free, and in full working order to the required operating performance and functionality in accordance with the manufacturer's warranty requirements. Leave all locking keys with the Contractor.

Leave the surrounding work area clean and free of rubbish. Remove rubbish and waste material from the site.

Issue to the Owner a copy of the manufacturer's maintenance requirements and a copy of the APL Product and Installation Warranty for the installed aluminium windows and doors.

KDC - Approved Building Consent Document - BC210208 - Pg 68 of 114 - 2/07/2021 - ComplyNZ

KDC - Approved Building Consent Document - BC210208 - Pg 69 of 114 - 2/07/2021 - ComplyNZ

7 INSULATION

7.1 Preliminary

Refer to General Conditions of Contract and the Special Conditions in this Specification as appropriate. Read this section in conjunction with all other trade sections.

7.2 Compliance

Comply with the New Zealand Building Code 1992 including all revisions and amendments, Verification Methods where appropriate, and construction principles that are embodied in the Acceptable Solutions.

Comply with all relevant provisions and recommendations of:

3604:2011(NZS)	Timber-framed buildings
4220:1982(NZS)	Code of practice for energy conservation in non-residential buildings
4243.1:2007(NZS)	Energy efficiency - Large buildings - Building thermal envelope
4246:2016(NZS)	Energy efficiency - Installing bulk thermal insulation in residential buildings
4859.1:2018(AS|NZS)	Thermal insulation materials for buildings - Part 1: General criteria and technical provisions

7.3 Thermal Insulation

7.3.1 Scope

Supply and install the selected products as thermal insulation to the specified R-values, complete with all accessories, to the floors, walls, ceilings, roofs, and other thermally insulated building elements, as noted and shown on the drawings. All aspects of this work shall be in accordance with the product manufacturer's technical literature and installation requirements, other relevant product manufacturers' recommendations, and as shown on the drawings.

7.3.2 Co-operation

Co-operate with other trades to ensure that all preliminary and preparatory works are completed to specification and as shown on the drawings.
Co-ordinate with other trades to install all thermal insulation as required.

7.3.3 Workmanship

All installation work shall be carried out by experienced and competent tradesmen, familiar with the specified products and installation techniques, in accordance with the manufacturer's installation requirements, and as noted and detailed on the drawings.
Store and handle products in accordance with the manufacturer's recommendations, keep dry and protect from damage. Do not compress fibre insulation bales. Do not use damaged or defective insulation products and accessories.
The building must be completely enclosed and water tight before installation commences with the exception of roof insulation when installed with roofing. Ensure the moisture content of timber

framing is no greater than 18% prior to installing insulation to timber framed elements. Always maintain the full insulation thickness to ensure the required thermal values are achieved. Do not install insulation pads or blankets into closed cavities that are less than the stated insulation nominal thickness.

KDC - Approved Building Consent Document - BC210208 - Pg 70 of 114 - 2/07/2021 - ComplyNZ

7.3.4 Product

7.3.4.1 Glass Fibre Pads

Glass fibre thermal insulating pads.

Manufacturer, brand name & type: Pink® Batts®

Thickness & R-Value: R2.2 Walls & R3.2 Ceiling

7.3.5 Installation

7.3.5.1 Wall Insulation - Glass Fibre Pads

Install glass fibre insulation pads, complete with accessories, friction fitted between wall studs and dwangs etc. and held in place in accordance with the manufacturer's installation recommendations. Completely fill the framing voids, leave no gaps at the edges or at penetrations etc, and maintain full insulation pad thickness. Support external wall insulation with vertical strapping tape at 400mm centres to the outside face, stainless steel stapled to the framing.

7.3.5.2 Ceiling Insulation, Truss/Framed Roof - Glass Fibre Pad

Install glass fibre insulation pads, complete with accessories, friction fitted between the ceiling joists, over the ceiling lining in accordance with the manufacturer's installation recommendations. Leave no gaps along the insulation pad edges and joints, and at the ceiling perimeter/wall junction. Separate ceiling insulation 200mm from recessed light fittings and other recessed electrical fittings; refer to the drawings for containment requirements around recessed electrical fittings.

7.3.6 Completion

Check that all insulation has been installed correctly and is correctly supported and that all edges, joins and ends are fully closed without gaps. Check for damage and faults and repair or replace as necessary. Collect and remove from site all rubbish and waste material.
Issue to the Owner a copy of any product maintenance requirements and a copy of the Thermal Insulation Product and Installation Warranties for the completed works.

8 PLUMBING

8.1 Preliminary

Refer to General Conditions of Contract and the Special Conditions in this Specification as appropriate. Read this section in conjunction with all other trade sections.

8.2 Compliance

Comply with the New Zealand Building Code 1992 including all revisions and amendments, Verification Methods where appropriate, and construction principles that are embodied in the Acceptable Solutions.

8.3 General

Carry out all works necessary to leave the water, waste, vent and soil systems serving the sanitary fittings and the plumbing hardware shown on the drawings or specified below in correct working order complete with all ancillary systems (safetrays, floor drains, overflows, relief valves, etc.) required, and with all normal incidentals customarily installed by this trade.

Comply with the Building Code, Territorial Authority By-laws and statutory authority Regulations as appropriate. Obtain all necessary permits and consents, serve all necessary notices, arrange for all tests and pay all fees and customary charges in connection with the required works.

8.4 Workmanship

8.4.1 Co-operation

Co-operate with all other trades. Attend upon Concretor, Drainlayer and Carpenter to set out the exact positions of pipe runs before adjacent work is put in hand, and to ensure that all pipes, sleeves, fixings, flashings etc. are correctly incorporated into the structure as construction proceeds.

8.4.2 Workmanship

All plumbing work shall be carried out by, or under the direct control of, properly qualified tradesmen, and shall be to recognised high standards.

The cutting away and checking of timbers shall be limited to such dimensions as will not prejudice the purpose for which the timber is used; observe NZS 3604 restrictions on the holing and checking of joists and beams. Chasing and checking of other materials only to approval. Install seismic restraints to storage tanks and HWCs as per drawings.

8.4.3 Pipework

Joints between pipes of different materials shall always be to the approval of the TA Plumbing Inspector.

Pipework set-out neatly with a minimum number of bends, and more or less parallel to and at right angles to structural elements - avoid diagonal piping.

KDC - Approved Building Consent Document - BC210208 - Pg 71 of 114 - 2/07/2021 - ComplyNZ

KDC - Approved Building Consent Document - BC210208 - Pg 72 of 114 - 2/07/2021 - ComplyNZ

9 DRAINLAYING

9.1 Preliminary

Refer to General Conditions of Contract and the Special Conditions in this Specification as appropriate. Read this section in conjunction with all other trade sections.

9.2 Compliance

Comply with the New Zealand Building Code 1992 including all revisions and amendments, Verification Methods where appropriate, and construction principles that are embodied in the Acceptable Solutions.

Comply with all relevant provisions and recommendations of:

1254:2010(AS/NZS)	PVC-U pipes and fittings for stormwater and surface water applications
1260:2017(AS|NZS)	PVC-U pipes and fittings for drain, waste and vent applications
2032:2006(AS/NZS)	Installation of PVC pipe systems
3500.0:2003(AS/NZS)	Plumbing and drainage - Glossary of terms
3500.2:2018(AS|NZS)	Plumbing and drainage Part 2: Sanitary plumbing and drainage
3500.3:2018(AS|NZS)	Plumbing and drainage Part 3: Stormwater drainage
NZBC E1	Surface Water
NZBC G13	Foul Water

9.3 General

Carry out all required works to leave the sewer and stormwater systems shown on the drawings in correct working order complete with all normal incidentals.

Comply with Local Authority By-laws and Health Department Regulations as appropriate. Obtain all necessary permits and consents, serve all necessary notices, arrange all tests and pay all fees and customary charges in connection with the works.

9.4 Foul Water Drainage

9.4.1 Scope

Supply, install, test and commission new, gravity-flow foul water drains on the site, to the locations, layout and details shown on the drawings, complete with all necessary components and accessories required for satisfactory completion and performance of the foul water drainage system. All aspects of this works shall comply with the requirements of the NZ Building Code, related compliance Standards, Regulations and Acts, and to the requirements of the Territorial Authority, and as specified herein and on the approved drawings and schedules. Ancillary work and/or services not specifically mentioned but necessary to complete the work to specified levels of performance shall be deemed included.

KDC - Approved Building Consent Document - BC210208 - Pg 73 of 114 - 2/07/2021 - ComplyNZ

Install foul water drains in natural ground, beneath and external to the building, for the distances indicated on the drawings. Allow for all ventilation requirements, inspection openings, bends, branches, manholes, inspection chambers, overflow gully traps, etc., as required and indicated on the drawings. Unless shown otherwise, the foul water drains shall be connected to the building's sanitary drainage system, and discharge to the foul water network.

The foul water drainage plans are diagrammatic only. Allow for all necessary vents, inspection fittings, cleaning eyes, traps and venting in accordance with AS/NZS 3500.2 and to comply with the New Zealand Building Code, and as required by the Territorial Authority. Refer to the drawings for the dimensioned locations of sanitary waste pipes and outlets.

9.4.2 Trench Excavation

9.4.2.1 Excavation

Locate all existing buried services before commencing excavation work in any area.

Excavations for trenches and pits shall be properly executed and supported in accordance with the requirements of AS/NZS 3500.2.

Carry out excavation work to comply with all relevant health and safety regulations and guidelines, including the 'Excavation Safety - Good Practice Guidelines' where appropriate.

Unless specified otherwise, the excavation of trenches shall be taken out by open cut to the levels and grades shown or implied on the drawings. Excavate trenches to the depths which will provide for the appropriate type of bedding.

Trench excavations shall be of sufficient width to allow all operations necessary for the jointing of pipes and placing of the specified backfill. The bottom width of the trenches shall at least the combined measurement of the outside diameter of the pipe plus 200mm - with a minimum clearance of 100mm on each side of the drain barrel. The trench width at the top of the pipe shall not exceed the outside diameter of the pipe plus 600mm unless the pipe in the trench is covered with concrete. The trench above the top of the pipe may be cut wider, either by excavating a wider bench or by battering the trench wall.

9.4.3 Pipe Laying

9.4.3.1 Bedding Pipes

Provide a minimum 75mm thick underlay layer of well compacted bedding material for all pipes. A chase shall be excavated in the bedding to accommodate any jointing socket or fitting in the drain. The pipe embedment material shall be laid and compacted so that the pipe is evenly and continuously supported along its length on either side of the pipe, and with an overlay layer minimum 150mm thick.

When trench support systems are used, the bedding material shall be placed and compacted in a manner so that no loss of compaction results from removal of the trench side support systems. The trench support shall be removed in such a way as to ensure that the placing and compaction of the

bedding material occurs below the trench supports and directly against the undisturbed ground of the trench walls.

After completion of the jointing and inspection of drain pipes, place and compact the bedding surround material around the pipe to the required depth over the pipe. The material shall be carefully placed around and over the pipe using hand tamping and in a manner that ensures the pipe is uniformly supported all round its perimeter and without voids. Take care during placement and compaction to ensure the pipe is not displaced or damaged.

9.4.3.2 Laying Pipes

Install foul water drains in accordance with AS/NZS 3500.2 to the layout, levels and grades shown on the drawings Drain pipes shall be laid to provide maximum falls, in straight lines and at an even grade, without obstruction to flow, and with full allowance for bedding.

Before installing the pipes, check the bore of each pipe is free from foreign matter and that the pipe exterior and the socket have not been damaged in handling or storage. All pipelines shall be kept clean and free of dirt and debris at all times during installation, testing and commissioning.

PVC-U foul water drain pipes shall be properly jointed (rubber ring joint or solvent welded joint) to produce a watertight seal in accordance with the manufacturer's instructions.

Start laying main drains at the point of outfall and insert junctions for branch drains as the work proceeds. Pipes shall be laid with the least number of bends, in the centre of the trench, in straight lines between bends, and to the grades and locations shown on the drawings.

Install all necessary fittings, including vents, inspection openings and access points, bends and junctions, to the locations shown on the drawings and in accordance with the manufacturer's instructions. Where not specified on the drawings or schedules, fittings for inspection openings, bends, junctions, etc., shall be selected from the PVC pipe system range of products and installed in accordance with the manufacturer's instructions.

Other than precautions against damage by displacement or floating pipes, no bedding surround material or backfill shall be placed until the laying of the drain has been inspected by the Territorial Authority.

9.4.4 Connection

9.4.4.1 Public Network - Boundary Connection

Connect to discharge the foul water drainage line directly to the public mains street-edge/boundary connection in accordance with the requirements of the Territorial Authority and as shown on the drawings.

9.4.5 Testing

9.4.5.1 Foul Water Drains

Test the foul water drainage installation, including all drains, connections and system components, for water tightness in accordance with the requirements of the Territorial Authority (TA).

KDC - Approved Building Consent Document - BC210208 - Pg 74 of 114 - 2/07/2021 - ComplyNZ

Where required by the Territorial Authority, the testing shall be undertaken in the presence of a representative of the TA. Demonstrate to the Contract Administrator and the Territorial Authority that the installation complies with the requirements of the contract documents, related standards and regulatory bodies. Lodge all certificates of approval with the Contract Administrator.

Unless specified otherwise by the Territorial Authority, the test method shall be the Water Test procedure for non-pressure pipelines as defined in AS/NZS 2302. Where appropriate, the procedures in NZBC E1/VM1 may be used as an alternative. The acceptability of other test methods are be subject to the approval of the Territorial Authority and the Contract Administrator.

Provide all necessary plant, equipment and instruments required for the specified testing procedure. All testing and commissioning shall be undertaken by suitably skilled and experienced technicians.

Pressure testing shall be carried out after the pipes have been laid and the bedding material has been placed over the pipes as specified.

Prior to testing ensure that all pipe junctions and inspection eyes are exposed, and pipelines have been flushed and all residual debris cleaned out.

Foul water manholes shall be tested for watertightness by plugging all pipes and filling with water. After absorption has taken place the water level shall remain constant for thirty minutes.

Test results shall be recorded clearly on properly formatted Test Result sheets, and submitted to the Contract Administrator within 48 hours of completion of testing.

Repair or replace any materials or workmanship found to be defective or faulty during testing, and repeat the test until a satisfactory test result is achieved.

Leave the installation watertight and free of defects, and operating to the required performance standard.

The work shall be deemed incomplete unless all required testing and commissioning has been carried out and has passed the requirements of the testing specification and the Territorial Authority.

9.4.5.2 Water Test Procedure - to AS/NZS 2302

Water test procedure of foul water drains (non-pressure) - to AS/NZS 2302: Section 7.3.2.

- The pipeline shall be filled with water to a height of not less than 1m above the natural ground level at the highest point of the section being tested, or to the flood level of the lowest sanitary fixture, but not exceeding 5m at the lowest point of the test section.
- The pressure shall be maintained without leakage for at least 15 minutes.
- The source of any leaks shall then be ascertained and any defects repaired.
- The pipeline shall then be retested.

Note: Testing should not be carried out if groundwater is present above the pipeline. If groundwater is present, the test pressure should be increased to compensate for the depth of groundwater at a rate of 10 kPa for every 1m of groundwater depth.

KDC - Approved Building Consent Document - BC210208 - Pg 75 of 114 - 2/07/2021 - ComplyNZ

9.4.6 Backfilling

9.4.6.1 Backfilling

Trenches shall be backfilled as soon as possible after the laying, inspecting and testing of the pipeline.

Where required, lay marker tape along the length of the drain, just above the top of the pipe embedment zone, before backfilling.

Trench backfill materials shall be placed over the pipe embedment, and compacted to restore the trench as near as practicable to the normal surrounding ground surface level and reduce the likelihood of subsidence. Backfill material shall be placed in uncompacted layers not exceed 300mm, then mechanically compacted to the required density.

Temporary trench support systems shall be lifted progressively above each layer of backfill to ensure each layer is compacted against undisturbed ground.

Any deficiencies of trench filling exposed by settlement shall be corrected to the required standard.

9.5 Stormwater Drainage

9.5.1 Scope

Supply, install, test and commission new, gravity-flow stormwater drains on the site, to the locations, layout and details shown on the drawings, complete with all necessary components and accessories required for the satisfactory completion and performance of the stormwater system. All aspects of this works shall comply with the requirements of the NZ Building Code, related compliance Standards, Regulations and Acts, and to the requirements of the Territorial Authority, and as specified herein and on the design drawings and schedules. Ancillary work and/or services not specifically mentioned but necessary to complete the installation shall be deemed included.

Install stormwater drains in natural ground, beneath and/or external to the building, for the distances indicated on the drawings. Allow for all inspection openings, bends, branches, manholes, inspection chambers, etc., as required and indicated on the drawings. Unless shown otherwise on the drawings, the stormwater drains shall be connected to the roof and surface stormwater installations, and discharge to the stormwater network.

The stormwater drainage plans are diagrammatic only. Allow for all necessary inspection fittings, cleaning eyes, and traps in accordance with AS/NZS 3500.3 and to comply with the New Zealand Building Code, and as required by the Territorial Authority. Refer to the drawings for the dimensioned locations of roof drainage system rainwater pipes and outlets, and surface drainage outlets, etc.

9.5.2 Requirements

9.5.2.1 Workmanship

Stormwater drainage work shall be carried out by qualified and experienced tradespersons, familiar with all required installation requirements, under the direct supervision of a NZ certified Registered

KDC - Approved Building Consent Document - BC210208 - Pg 76 of 114 - 2/07/2021 - ComplyNZ

Drain Layer, in accordance with AS/NZS 3500.3 and to comply with the New Zealand Building Code, and all local codes and regulatory authority requirements, and the conditions of the Building Consent.

All pipe cutting, jointing, and supporting techniques shall be exactly as recommended by the pipe manufacturer. Pipes, fittings and accessories shall be handled and installed in such a manner that prevents any damage to the component.

All work shall be such as to leave a neat, efficient, robust and watertight installation.

Carry out all necessary inspections and tests during installation to ensure compliance with the design specifications and regulatory requirements. Provide test result sheets to the Contract Administrator to show compliance has been achieved.

Take all necessary precautions during installation to protect the stormwater drainage system from damage, and to prevent the entry of:
- soil, sand, or rock;
- sewage, including the contents of any septic tank, or trade waste; or
- any other substance that could damage or impede the operation of the stormwater drainage network.

Ensure that any installed drain is adequately protected from any damage and excessive loading during the remaining construction period.

Protect adjacent finished work and surfaces from damage and contamination during installation. Any damage to fittings or finished surfaces shall be made good by the appropriate trade at the Drain Layer's expense.

Any associated electrical wiring and prescribed electrical work (by others) shall be carried out by a qualified electrician in accordance with the electrical standards and regulations and the Electrical specification.

9.5.3 Trench Excavation

9.5.3.1 Excavation

Locate all existing buried services before commencing excavation work in any area.

Excavations for trenches and pits shall be properly executed and supported in accordance with the requirements of AS/NZS 3500.3.

Carry out excavation work to comply with all relevant health and safety regulations and guidelines, including the 'Excavation Safety - Good Practice Guidelines'.

Unless specified otherwise, the excavation of trenches shall be taken out by open cut to the levels and grades shown or implied on the drawings. Excavate trenches to the depths which will provide for the appropriate type of bedding.

KDC - Approved Building Consent Document - BC210208 - Pg 77 of 114 - 2/07/2021 - ComplyNZ

KDC - Approved Building Consent Document - BC210208 - Pg 78 of 114 - 2/07/2021 - ComplyNZ

Trench excavations shall be of sufficient width to allow all operations necessary for the jointing of pipes and placing of the specified backfill. The bottom width of the trenches shall at least the combined measurement of the outside diameter of the pipe plus 200mm - with a minimum clearance of 100mm on each side of the drain barrel. The trench width at the top of the pipe shall not exceed the outside diameter of the pipe plus 600mm unless the pipe in the trench is covered with concrete. The trench above the top of the pipe may be cut wider, either by excavating a wider bench or by battering the trench wall.

Where a trench has been excavated deeper than required without authorisation, the excess depth shall be filled either with bedding material compacted to achieve a density as near to the original soil density as possible, or with concrete.

9.5.4 Pipe Laying

9.5.4.1 Bedding Pipes

Provide a minimum 75mm thick underlay layer of well compacted bedding material for all pipes. A chase shall be excavated in the bedding to accommodate any jointing socket or fitting in the drain. The pipe embedment material shall be laid and compacted so that the pipe is evenly and continuously supported along its length on either side of the pipe, and with an overlay layer minimum 150mm thick.

When trench support systems are used, the bedding material shall be placed and compacted in a manner so that no loss of compaction results from removal of the trench side support systems. The trench support shall be removed in such a way as to ensure that the placing and compaction of the bedding material occurs below the trench supports and directly against the undisturbed ground of the trench walls.

After completion of the jointing and inspection of drain pipes, place and compact the bedding surround material around the pipe to the required depth over the pipe. The material shall be carefully placed around and over the pipe using hand tamping and in a manner that ensures the pipe is uniformly supported all round its perimeter and without voids. Take care during placement and compaction to ensure the pipe is not displaced or damaged.

9.5.4.2 Laying Pipes

Install stormwater drains in accordance with AS/NZS 3500.3 to the layout, levels and grades shown on the drawings. Drain pipes shall be laid to provide maximum falls, in straight lines and at an even grade, without obstruction to flow, and with full allowance for bedding.

Before installing the pipes, check the bore of each pipe is free from foreign matter and that the pipe exterior and the socket have not been damaged in handling or storage. All pipelines shall be kept clean and free of dirt and debris at all times during installation, testing and commissioning.

PVC-U stormwater drain pipes shall be properly jointed (rubber ring joint or solvent welded joint) to produce a watertight seal in accordance with the manufacturer's instructions.

Start laying main drains at the point of outfall and insert junctions for branch drains as the work proceeds. Pipes shall be laid with the least number of bends, in the centre of the trench, in straight lines between bends, and to the grades and locations shown on the drawings.

Install all necessary fittings, including inspection openings, bends and junctions, to the locations shown on the drawings and in accordance with the manufacturer's instructions. Where not specified on the drawings or schedules, fittings for inspection openings, bends, and junctions shall be selected from the PVC-U pipe system range of products and installed in accordance with the manufacturer's instructions.

Other than precautions against damage by displacement or floating pipes, no bedding surround material or backfill shall be placed until the laying of the drain has been inspected by the Territorial Authority.

9.5.5 Connection

9.5.5.1 Public Network - Street Mains Connection

Connect to discharge the stormwater drainage line directly to the public stormwater mains in accordance with the requirements of the Territorial Authority and as shown on the drawings.

KDC - Approved Building Consent Document - BC210208 - Pg 79 of 114 - 2/07/2021 - ComplyNZ

10 ELECTRICAL

10.1 Preliminary

Refer to General Conditions of Contract and the Special Conditions in this Specification as appropriate. Read this section in conjunction with all other trade sections.

10.2 Compliance

Comply with the New Zealand Building Code 1992 including all revisions and amendments, Verification Methods where appropriate, and construction principles that are embodied in the Acceptable Solutions.

Comply with all relevant provisions and recommendations of:

2053.1:2001(AS/NZS)	Conduits and fittings for electrical installations - General requirements
2201.1:2007(AS/NZS)	Intruder alarm systems - Client's premises - Design, installation, commissioning and maintenance
2293.2:2019(AS|NZS)	Emergency lighting and exit signs for buildings - Part 2: Routine service and maintenance
3000:2018(AS|NZS)	Electrical installations - Known as the Australian/New Zealand Wiring Rules
3012:2019(AS|NZS)	Electrical installations - Construction and demolition sites
3085.1:2004(AS/NZS)	Telecommunications installations - Basic requirements
3100:2009(AS/NZS)	Approval and test specification - General requirements for electrical equipment
3112:2011(AS/NZS)	Approval and test specification - Plugs and socket-outlets
3191:2008(AS/NZS)	Electrical flexible cords
5000.1:2005(AS/NZS)	Electric cables - Polymeric insulated - For working voltages up to and including 0.6/1 (1.2) kV
60227.5:2003(AS/NZS)	Polyvinyl chloride insulated cables of rated voltages up to and including 450/750 V - Flexible cables (cords)
60335.2.30:2015(AS|NZS)	Household and similar electrical appliances - Safety - Part 2.30: Particular requirements for room heaters
60335.2.30:2015(AS|NZS)INCIEC	Household and similar electrical appliances - Safety - Part 2.30: Particular requirements for room heaters
60335.2.35:2013(AS/NZS)	Household and similar electrical appliances - Safety - Part 2.35: Particular requirements for instantaneous water heaters
60598.2.2:2016(AS|NZS)	Luminaires - Part 2.2: Particular requirements - Recessed luminaires
60598.2.22:2005(AS/NZS)	Luminaires - Particular requirements - Luminaires for emergency lighting
60898.1:2004(AS/NZS)	Electrical accessories - Circuit-breakers for overcurrent protection for household and similar installations - Circuit-breakers for a.c. operation
61009.1:2015(AS/NZS)	Residual current operated circuit-breakers with integral overcurrent protection for household and similar uses (RCBOs) - Part 1: General rules

KDC - Approved Building Consent Document - BC210208 - Pg 80 of 114 - 2/07/2021 - ComplyNZ

6104:1981(NZS)	Specification for emergency electricity supply in buildings
NZECP 54	Recessed luminaires

10.3 Workmanship

10.3.1 General

Supply and install all materials, including all necessary minor and incidental items, for proper completion of all of the electrical services specified or shown on the drawings. The contract will not be deemed to be complete until the Electrician has provided an Electrical Certificate of Compliance (made available to the Contractor in time for the Code Compliance Certificate application).

10.3.2 Workmanship

All electrical work shall be carried out by, or under the direct control of, registered tradesmen, and shall be to recognized high standards. All work shall be such as to leave a neat, efficient and robust installation. Neatly label switchboards to identify each circuit.

The cutting away and checking of timbers shall be limited to such dimensions as will not prejudice the purpose for which the timber is used; observe NZS 3604: 2011 restrictions on the holing and checking of joists and beams. Chasing and checking of other materials shall be only to approval.

KDC - Approved Building Consent Document - BC210208 - Pg 81 of 114 - 2/07/2021 - ComplyNZ

RS Eng

PROJECT New Dwelling

CLIENT GJ Gardner Homes - Edge and Randall

Page No. 1
File No. 17644
Calculated by IM
Checked by ST
Date 9 February 2021

AS/NZS 1170.2:2011.A5 Calculation of Site Wind Speed

KDC - Approved Building Consent Document - BC210208 - Pg 82 of 114 - 2/07/2021 - ComplyNZ

Hill Multiplier	Flat Terrain
z	4.00
H	0
Lu	0
x	0
L1	0
L2	0
H/(2Lu)	#DIV/0!
Mh	#DIV/0!

Vr	45.00	m/s	Table 3.1
Vs	37.00	m/s	Table 3.1
Md	1.00	Table 3.2	
Terrain Cat. Ult	2.00	Table 4.1A	
Terrain Cat. Serv.	2.00	Table 4.1A	
Mz ultimate	0.91	Table 4.1A	
Mz service	0.91	Table 4.1A	
Ms	1.00	Table 4.3	
Mt	1.00	<=500m SL: Mt=Mh or Mlee	
(1+0.00015E)	1.00	>500m SL: Mt=Mh Mlee (1+0.00015E)	

Vsit, = Vr Md (Mz Ms Mt)

NZS 3604:2011	Ult.	Serv.
Low <=	32	26
Medium <=	37	30
High <=	44	36
Very High <=	50	41
Extra High <=	55	45
Specific design >	55	45

ind Speed $V_{sit,\beta}$ **Wind Pressure(unfactored)**

Vsit ultimate =	**41.0**	**m/s**	**HIGH**	**1.01 kPa**
Vsit service =	**33.7**	m/s	HIGH	**0.68 kPa**

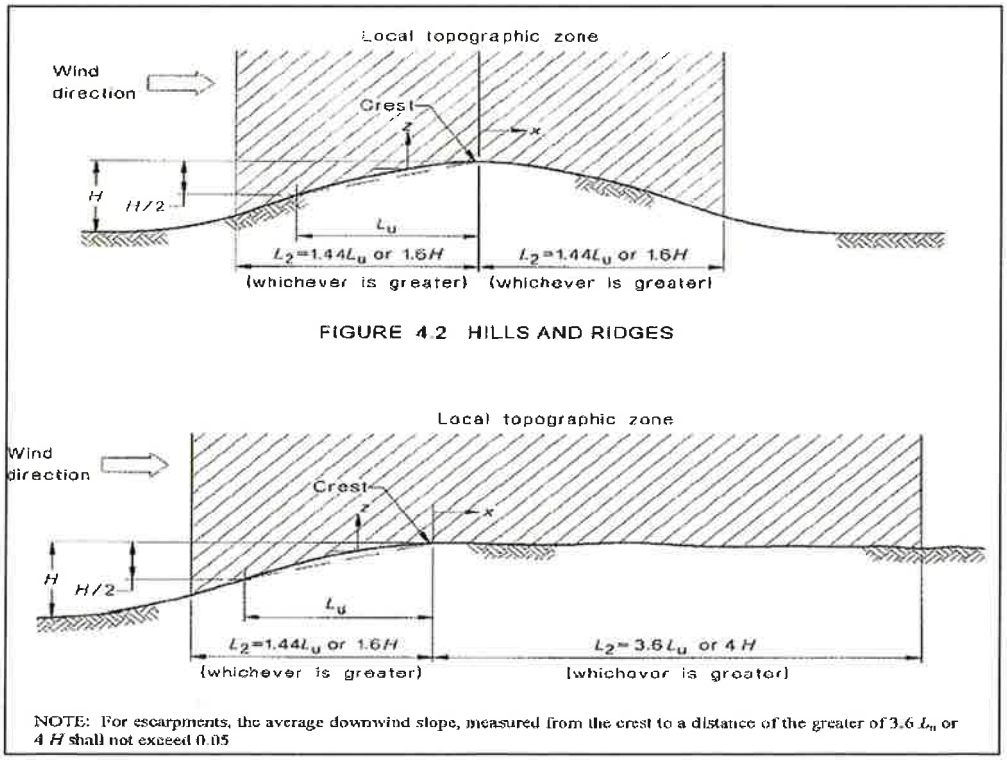

FIGURE 4.2 HILLS AND RIDGES

NOTE: For escarpments, the average downwind slope, measured from the crest to a distance of the greater of 3.6 L_u or 4 H shall not exceed 0.05

RS Eng

PROJECT

CLIENT

Page No. 2
File No. 17644
Calculated by
Checked by
Date

Post connection for Veranda.

L. A. = 7.5 m²

G = 0.64 x 7.5 m² = 3 KN
Q = 0.25 x 7.5 m² = 1.9 KN

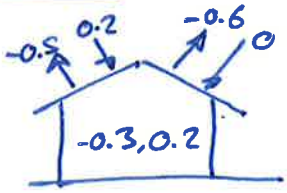

W-u = -0.8 x 1 x 7.5 = 6 KN
W+u = 0.5 x 1 x 7.5 = 3.8 KN
Ws = 0.8 x 0.68 x 7.5 = 4 KN

Refer wind calc.
Wu = 1.01 kPa
Ws = 0.68 "

1.2G + 1.5Q = 6.5 KN
0.9G + W-u = -3.3 KN
1.2G + W+u = 7.6 KN

Use B8S(SS) Bowmac Bracket (11.5 kN)
& SPH22C(SS) Lumberlok - split hanger (21 kN)

Check uplift. Try ø600mm x 1.0m

Footing weight = $\left(\frac{\pi}{4}\right) \times 0.6^2 \times 1.0 \times 24 = 6.8$ kN
Greater than -3.3 kN ⇒ O.K.

⇒ Use ø600mm x 1.0m deep. concrete footing.

Use standard detail. Refer previous job for Ionta job # 17301

Check bearing

$V_{bu} = (9 S_u + q) A_b = \left((9 \times 40) + (18 \times 1)\right) \times \left(\frac{\pi}{4}\right) \times 0.6^2 \times \phi 0.5$

$\phi V_{bu} = 53$ kN ⇒ O.K.

KDC - Approved Building Consent Document - BC210208 - Pg 83 of 114 - 2/07/2021 - ComplyNZ

RS Eng

PROJECT New Dwelling
CLIENT GJ Gardner Homes
EDge & Randell

Page No. 3
File No. 17644
Calculated by I. M.
Checked by S. T.
Date 10/2/21

Foundation Design Considerations.

Subdivision report by Hawthorne Geddes engineers and architects Ltd titled "Geotechnical Investigation Report for proposed subdivision of lot 1 DP 11150 Pheonix Place, Dargaville" and dated 27 August 2018 makes the following relevant conclusions:

- Flat sites - Soils not expansive.
- Silt hard pan approx 300mm thick within 200mm of surface
- Ground water at 0.6m in HA 8
- Maximum 500mm filling
- Stormwater from roofs and impervious surfaces to be discharged to reticulation.
- Material above hardpan to be removed and replaced with compacted hardfill.

To mitigate possible shallow ground water over silt hard pan, propose slotted drain coil around perimeter of hard fill. Drain to dispersal trench. Drain to be positioned at surface of hard pan

Waffle Raft has been designed for 'Class M' moderately expansive soils as per AS 2870 : 2011. as conservative approach due to limited testing.

Adopt hardfill layer as per detail to mitigate capilary action beneath slab.

SUBSOIL DRAIN.

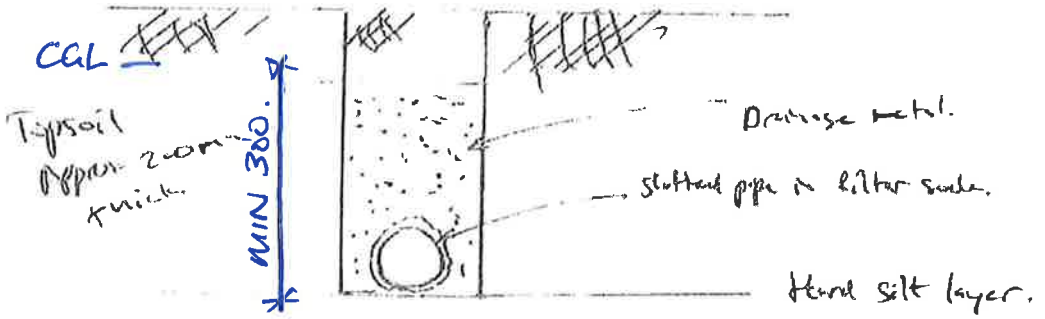

Fall drain to dispersal trench. Cut into silt layer if required to achieve fall

Refer to attached plan.

KDC - Approved Building Consent Document - BC210208 - Pg 84 of 114 - 2/07/2021 - ComplyNZ

RS Eng

PROJECT

CLIENT

Page No.
File No. 17644
Calculated by
Checked by
Date 23/06/21.

WAFFLE RAFT DESIGN

Waffle Raft as per attached excel cal sheet as per AS2870.

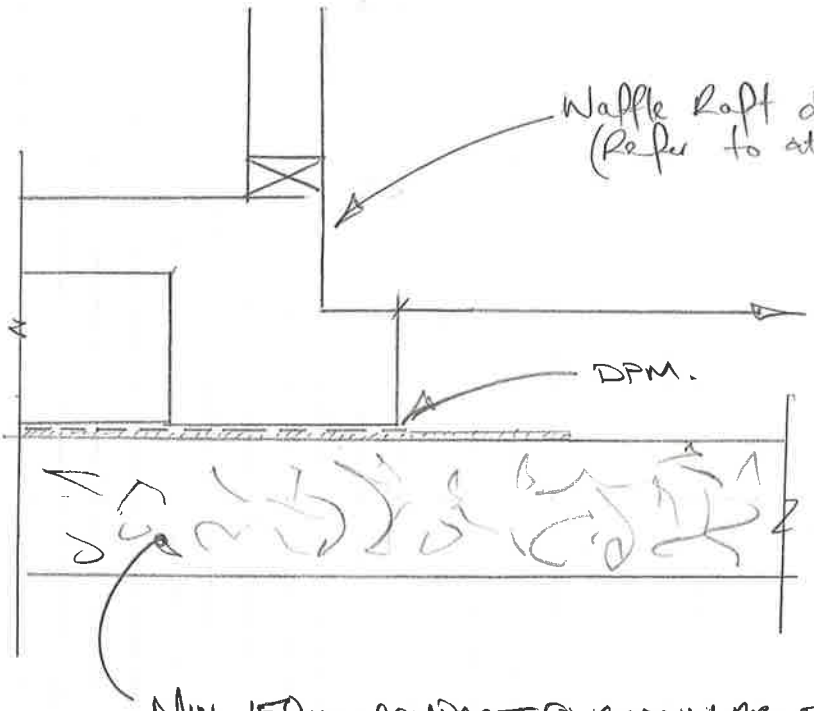

MIN. 150mm COMPACTED GRANULAR FILL (AS PER NZS 3604) :SEE 7.5.3.

ADOPT DPM BENEATH SLAB.

KDC - Approved Building Consent Document - BC210208 - Pg 85 of 114 - 2/07/2021 - ComplyNZ

RS Eng

Page No.	
File No.	17644
Calculated by	IM
Checked by	ST
Date	9 February 2021

PROJECT New Dwelling
CLIENT GJ Gardner Homes - Edge and Randell

The report prepared by Hawthorn Geddes *'Geotechnical Investigation Report for Proposed Subdivision of Lot 1 DP 111509, Phoenix Place, Dargaville'* dated 27 August 2018 has been reviewed.

Moderately Expansive Clays All Construction Types

AS 2870 requires 310mm beam depth (min 150 depth below rebate for brick veneer)
3/N12 bars in base of perimeter footing
2/N12 bars at top of perimeter footing where rebate width less than 80mm wide, otherwise 1/N12 OK
1/N12 bar in base of Ribs
SL72 mesh for Slab length to 20m (179mm^2/m)
SL82 mesh for Slab length up to 30m (226mm^2/m)

NZ equivalent for N12 bar is HD12 (ie Grade 500E 12mm deformed)

Therefore use 3/HD12 in base of perimeter, 2/HD12 bars at top of perimeter footing where rebate width less than 80mm wide, otherwise 1/HD12,
and with mesh options as below;

SE72 mesh	(192mm^2/m)	OK for slab length up to 23m
SE82 mesh	(251mm^2/m)	OK for slab length up to 30m
SE62 plus HD12 top of each rib	(240mm^2/m)	OK for slab length up to 30m
SE72 plus HD12 top of each rib	(286mm^2/m)	OK for slab length up to 30m

Maximum lengths interpolated for specific mesh cross section

If mesh larger than SE72, increase slab thickness to 95mm to account for larger mesh size

NOTES

1) Lay waffle Raft floor over a **150mm** minimum compacted depth of hardfill extending 1.0m out from building envelope to help seal off moisture variations. As per Suitability Report .
2) Ensure ground moisture content near equilibrium at time of slab construction to minimise potential for bowing from moisture uptake. Do not leave prepared sites exposed to dry out.
3) If water pipes embedded in floor slab for floor heating, increase slab thickness to 110mm minimum
4) Recommend 25MPa minimum concrete stregth (RaftMix or equivalent) where exposed concrete surface (ie garage floor or polished floors)
5) 3/HD12 bars x 2.0m long must be provided at re-entrant corners
6) Shrinkage control joints are not recommended in expansive clays. If a crack-free slab is required use a Denka CSA additive in the concrete.
7) Where rigid floor coverings proposed (tiles, etc), use SE92 mesh or equivalent over this area.
9) Control Joints required in Brick Veneer as per Clause 9.2.8 E2/AS1 of the NZBC:
Typically as per manufacturers requirements, maximum of 5.0m and other other deails as per CCANZ NZ Concrete Masonry Manual 2017 http://nzcma.org.nz/masonry-manual.aspx
10) Ground Beam continuity must be maintained. Internal Beams, where required, must be continuous from edge to edge of the slab. At re-entrant corners the external beam must continue a minimum of 1.0m into the slab before reducing to an internal beam. Where beams are cast at different levels, special detailing will be require to provide continuity. Where re-entrant corners are less than 1.5m long special detailing as per Figure 5.4 AS2870 is required.
11) Applies to single storey construction with light weight cladding or articulated brick veneer with control joints, Light weight two storey timber construction up to 8.5m gable ends - light weight floor only. Max length of 30m and no control joints to slab. Anything outside of these parameters is outside of the Standard Designs of AS2870 and requires Specific Engineering Design
12) Consideration must be given to the presence of existing or recently removed trees and their impact on the moisture content in the soil - please discuss with your engineer.
13) This standard design applies to lightweight cladding or articualted brick veneer as highlighted above. Heavy construction such as Concrete block or precast concrete will require specifc engineering design.

KDC - Approved Building Consent Document - BC210208 - Pg 86 of 114 - 2/07/2021 - ComplyNZ

KDC - Approved Building Consent Document - BC210208 - Pg 87 of 114 - 2/07/2021 - ComplyNZ

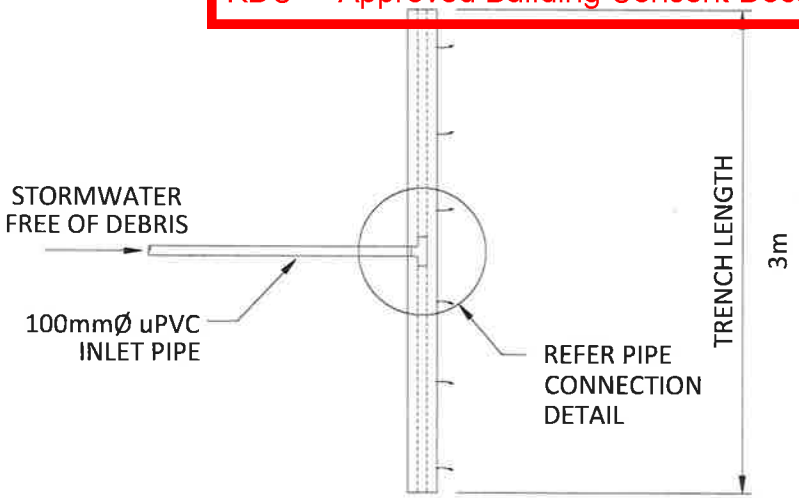

PLAN SCALE: 1:75

(KEEP DISPERSAL TRENCH 30m CLEAR OF PROPERTY BOUNDARY)

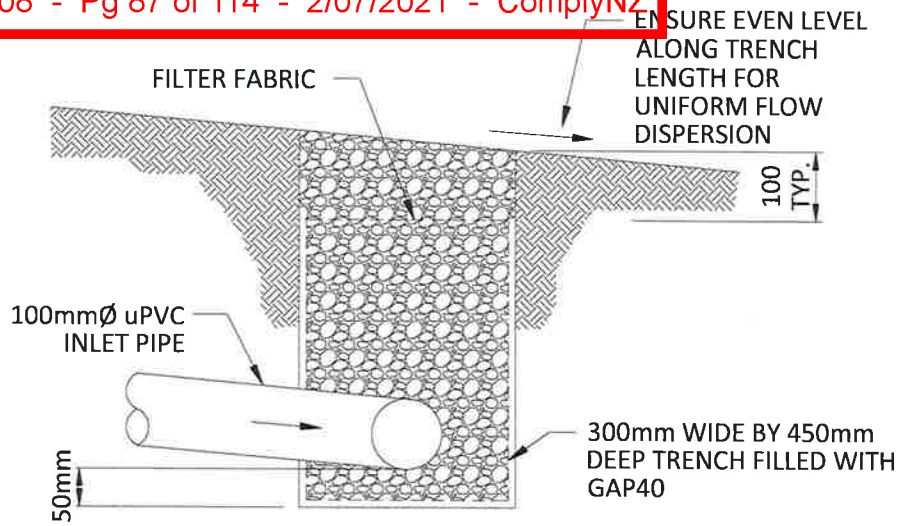

A - SECTION SCALE 1:100

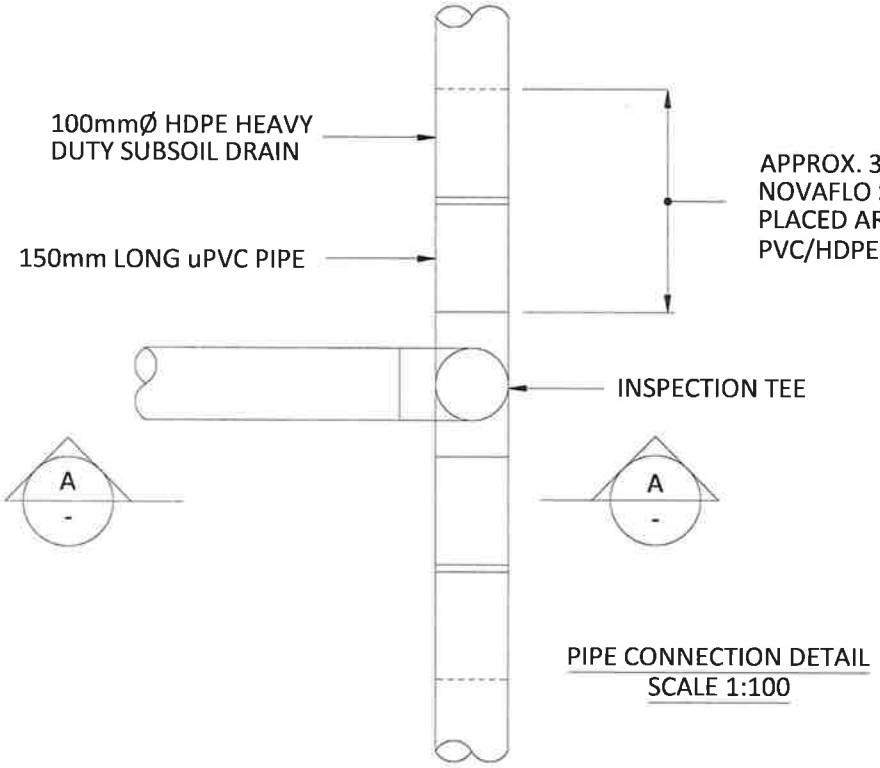

PIPE CONNECTION DETAIL
SCALE 1:100

RS Eng Ltd
09 438 3273
office@RSEng.co.nz
2 Seaview Road,
Whangarei 0110

Title
STANDARD DISPERSAL DRAIN
TYPICAL DETAIL

Client

Location

Date	Rev	Notes
12/12/17	A	Original Issue

Scale	Original	Rev
As Shown	A4	

Drawn by	Approved by	File	Sheet
NW	ST		1

KDC - Approved Building Consent Document - BC210208 - Pg 88 of 114 - 2/07/2021 - ComplyNZ

SHAPE SITE TO ASSIST IN STORMWATER RUN-OFF AWAY FROM THE BUILDING PLATFORM

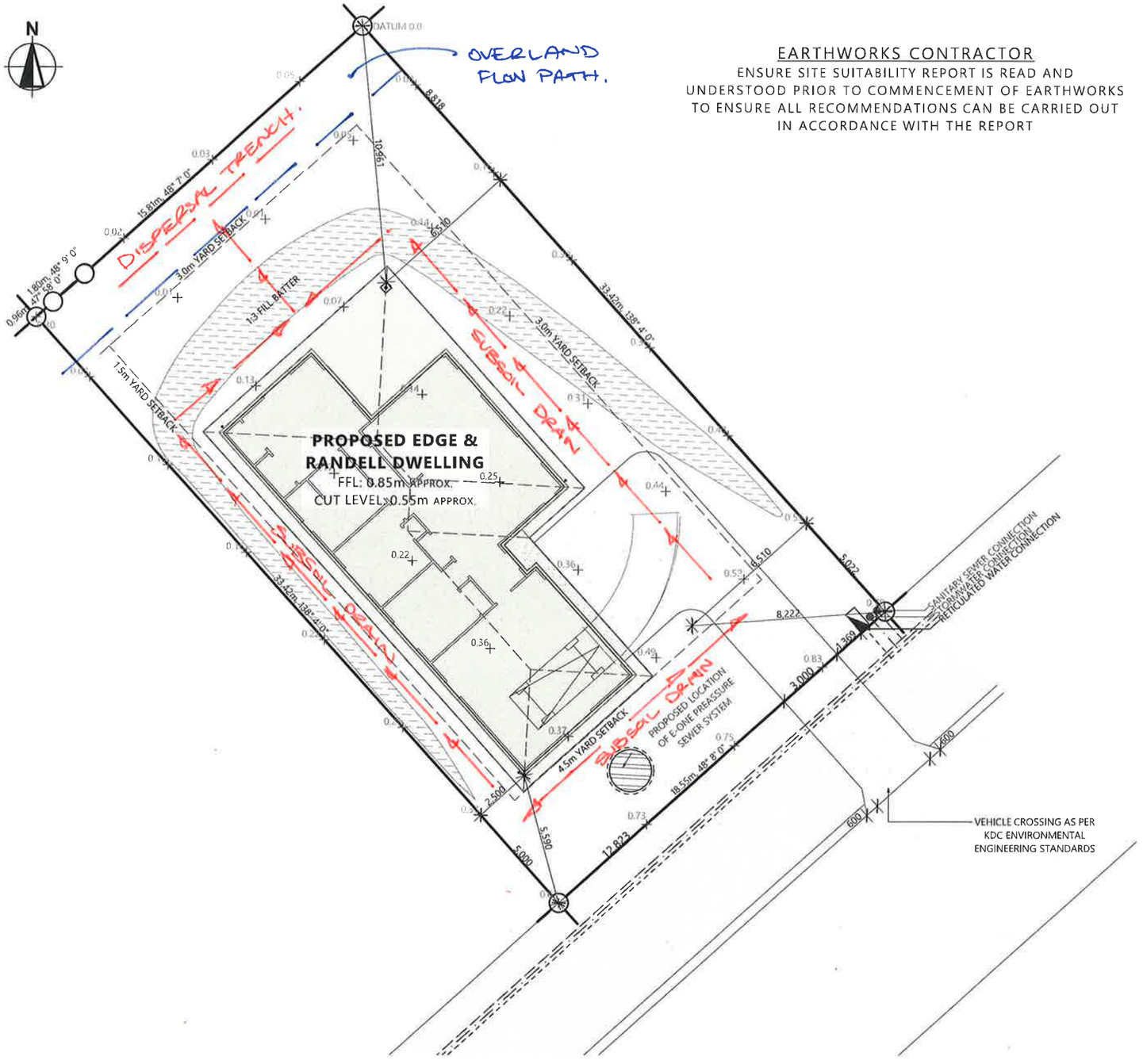

EARTHWORKS CONTRACTOR

ENSURE SITE SUITABILITY REPORT IS READ AND UNDERSTOOD PRIOR TO COMMENCEMENT OF EARTHWORKS TO ENSURE ALL RECOMMENDATIONS CAN BE CARRIED OUT IN ACCORDANCE WITH THE REPORT

SITE LOCATION

DISTRICT PLAN

ZONE:	RESIDENTIAL

	BUILDING COVERAGE	**PERMITTED**
	MAX ALLOWED **35%** OF 619m² SITE	
	FLOOR AREA O/FOUNDATION:	**145.0m²**
	FLOOR AREA O/FRAMING:	138.0m²
	ACTUAL BUILDING COVERAGE:	**23%**
	IMPERMEABLE AREA	**PERMITTED**
	HOUSE AREA OVER EAVES:	190.8m²
	CONCRETE DRIVE/PATH (NOT UNDER EAVES):	58.2m²
	TOTAL IMPERMEABLE:	249.0m²
	TOTAL IMPERMEABLE COVERAGE:	**40%**
	EARTHWORKS	
	SILT CONTROL	

85m² OF TROWEL FINISHED CONCRETE WITH 5kg/m³ BLACK OXIDE INCLUDED BY G.J'S

DRIVEWAY 81m²

TOTAL SHOWING 81m²

40% IMPERMIABLE SITE COVERAGE REACHED WITH 4m² CONCRETE REMAINING, AVAILABLE TO COVERED AREAS ONLY.

SITE CONCEPT ONLY - SUBJECT TO ENGINEERS APPROVAL

G.J. Gardner. HOMES

COPYRIGHT - THIS DRAWING REMAINS THE PROPERTY OF G.J. GARDNER HOMES AND IS PROVIDED FOR THE USE DESCRIBED AND MAY NOT BE USED OR REPRODUCED IN WHOLE OR IN PART WITHOUT PERMISSION

SUDFELT CONSTRUCTION LTD
WHANGAREI / KAIPARA
FRANCHISEE FOR
G.J.GARDNER HOMES
14 PERCY STREET,
KENSINGTON
P (09) 437 5666
www.gjgardner.co.nz

ALL CONSTRUCTION TO COMPLY WITH THE LOCAL AUTHORITY REQUIREMENTS, NZ BUILDING CODE/APPROVED DOCUMENTS, AND MEANS OF COMPLIANCE, INCL. NZS3604:2011

ALL DIMENSION AND LEVELS ARE TO BE CHECKED BY CONTRACTOR PRIOR TO COMMENCEMENT OF WORK. CONTRACTOR TO REPORT ANY DISCREPANCY.

DO NOT SCALE OFF PLANS

NEW DWELLING FOR
EDGE & RANDELL
LOT 8 SAMPSONS WAY
DARGAVILLE
KAIPARA

CONSENT

LEGAL DESCRIPTION
LOT NUMBER: **8**
DP NUMBER: **542244**

SITE INFORMATION
SITE AREA: **619m²**
CORROSION: **C**
DISTRICT PLAN ZONE: **RESIDENTIAL**
WIND ZONE: **HIGH**

SITE PLAN

JOB No: **390076**
SHEET SIZE: **A3**
SCALE: **1:200, 1:1000, 1:100, 1:1**
DRAWN: **C. LIENERT**
PUBLISHED: **24/03/2021**
SHEET: 1
CHECKED: MS

KDC - Approved Building Consent Document - BC210208 - Pg 89 of 114 - 2/07/2021 - Compliance

PRIOR TO COMMENCEMENT OF FOUNDATION CONSTRUCTION

1. FOUNDATION PLAN TO BE READ IN CONJUNCTION WITH ENGINEER'S SITE SUITABILITY REPORT

2. CONTRACTOR IS TO LOCATE ALL EXISTING SEWER & STORMWATER PIPES BEFORE DIGGING ANY FOOTINGS.

3. CONTRACTOR IS TO REFER TO ENGINEERS FOUNDATION SPECIFICATIONS & CONDITIONS BEFORE DIGGING ANY FOOTINGS OR ORDERING ANY MATERIALS.

ALL DIMENSIONS TO EDGE OF SLAB INCLUDE 120mm BRICK REBATES
REFER TO WALL FRAMING PLAN FOR FRAMING SET OUT DIMENSIONS

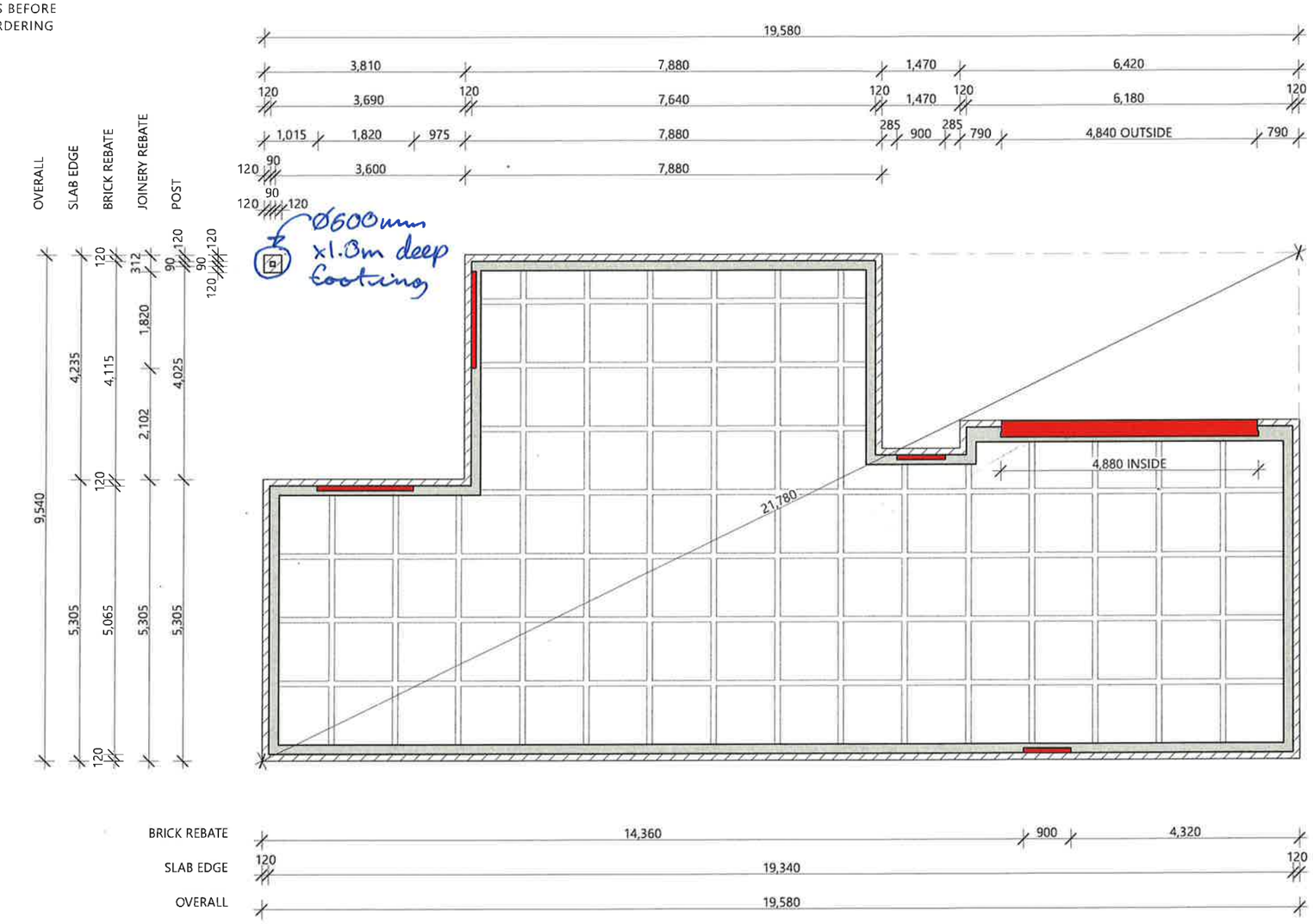

* Typical re-entrant corner detail and 3x corner steel. Refer Davies job

FOUNDATION KEY

- 300mm WIDE x 310mm DEEP RIBRAFT EDGE BEAM WITH 120mm WIDE BRICK REBATE, 150mm DEEP
- 300mm WIDE x 310mm DEEP SLAB EDGE BEAM WITH NO REBATE
- RIBRAFT NIB BEAM WITH 120mm WIDE BRICK REBATE, 150mm DEEP
- 300mm SLAB THICKENING BEAM FOR INTERNAL LOAD BEARING WALL SUPPORT
- 100mm RIBRAFT INTERNAL BEAM (POD LAYOUT GOVERNED BY RIB)
- 100mm RIBRAFT INTERNAL BEAM
- 1100 x 1100 x 220 THICK RIBRAFT POLYSTYRENE PODS
- 25mm DEEP x 85mm WIDE REBATE FOR FULL HEIGHT JOINERY WHERE SPECIFIED
- 400mm WIDE x 310mm DEEP RIBRAFT EDGE BEAM WITH 20mm DEEP, 310mm WIDE GARAGE DOOR REBATE

G.J. Gardner. HOMES

COPYRIGHT - THIS DRAWING REMAINS THE PROPERTY OF G.J. GARDNER HOMES AND IS PROVIDED FOR THE USE DESCRIBED AND MAY NOT BE USED OR REPRODUCED IN WHOLE OR IN PART WITHOUT PERMISSION

SUDFELT CONSTRUCTION LTD
WHANGAREI / KAIPARA
FRANCHISEE FOR
G.J.GARDNER HOMES
14 PERCY STREET,
KENSINGTON
P (09) 437 5666
www.gjgardner.co.nz

ALL CONSTRUCTION TO COMPLY WITH THE LOCAL AUTHORITY REQUIREMENTS, NZ BUILDING CODE/APPROVED DOCUMENTS, AND MEANS OF COMPLIANCE, INCL. NZS3604:2011

ALL DIMENSION AND LEVELS ARE TO BE CHECKED BY CONTRACTOR PRIOR TO COMMENCEMENT OF WORK. CONTRACTOR TO REPORT ANY DISCREPANCY.

DO NOT SCALE OFF PLANS

NEW DWELLING FOR
RACHYL EDGE & REGAN RANDELL
LOT 8 SAMPSONS WAY
DARGAVILLE
KAIPARA

CONSENT

LEGAL DESCRIPTION
LOT NUMBER: **8**
DP NUMBER: **542244**

SITE INFORMATION
SITE AREA: **619m²**
CORROSION: **C**
DISTRICT PLAN ZONE: **RESIDENTIAL**
WIND ZONE: **HIGH**

FOUNDATION

JOB No: **390076**
SHEET SIZE: **A3**
SCALE: **1:100**
DRAWN: **C. LIENERT**
PUBLISHED: **24/01/2021**
SHEET: **S01**
CHECKED:

1. BRANZ Apprasial No.812 (2019) - Sikalastic Interior Waterproofing System
2. Clearlite Shower Shower Tray Installation
3. Clearlite Shower Wall Liner Installation
4. Sikalastic Interior Waterproofing System Installation Details
5. Sika BlackSeal Plus - Slab Edge Waterproofing Membrane
6. Roof Cladding
7. Dektite - Pipe Penetration for Pressed Metal Tile
8. Masons - Window Flashing Tape - Codemark Certificate
9. Thermakraft 215 - Roofing Underlay
10. BRANZ Apprasial No.548 (2019) - Tekton Building Wrap
11. Masons - Window Flashing Tape - Installation
12. DPC - Malthoid Damp Proof Course
13. Lumberlok Stud to Top Plate Fixing Schedule
14. Ecoply - EP1
15. Ecoply - EPG
16. GIB - GS1-N
17. Pipe Materials for Hot & Cold Water
18. Rheem 180l Mains Pressure HWC
19. E1/AS1 - Bedding and Backfilling
20. Brick Specification
21. CodeMark Certificate of Conformity - Firth Ribraft® Floor System
22. BRANZ Appraisal No.928 (2016) - GIB EzyBrace Systems 2016
23. BRANZ Appraisal No.427 (2007) - GIB Aqualine Wet Area Systems
24. BRANZ Appraisal No.427 (2007) - GIB Aqualine® Wet Area Systems

KDC - Approved Building Consent Document - BC210208 - Pg 90 of 114 - 2/07/2021 - ComplyNZ

MiTek New Zealand Limited

Correspondence from : **AUCKLAND**
40 Neales Road, East Tamaki 2013
PO Box 58-014, Botany 2163
Phone: 09 274 7109
Fax: 09 274 7100

CHRISTCHURCH
14 Pilkington Way, Wigram 8042
PO Box 8387, Riccarton 8440
Phone: 03 348 8691
Fax: 03 348 0314

www.miteknz.co.nz

KDC - Approved Building Consent Document - BC210288 - Pg 1 of 14 - 2/02/2021 - ComplyNZ

PRODUCER STATEMENT for MiTek 20/20® TRUSS DESIGN - Version 4.7

ISSUED BY: **MiTek New Zealand Limited**

TO: **CARTERS**

IN RESPECT OF: **MiTek® Truss Designs**

This producer statement covers the MiTek 20/20® truss design and the structural performance of the GANG-NAIL® connector plate for the job reference **334171C1** and may be used by a Building Consent Authority to assist in determining compliance with the New Zealand Building Code.

The MiTek 20/20® truss design program has been developed by MiTek New Zealand Limited for the design of MiTek® timber roof, floor and attic trusses in New Zealand. The truss designs computed by MiTek 20/20 ® are prepared using sound and widely accepted engineering principles, and in accordance with compliance documents of the New Zealand Building Code and Verification Method B1/VM1; and internationally accepted standard ANSI/TPI 1 - 2002 as an alternative solution, to satisfy the requirements of Clause B1 of the New Zealand Building Code.

On behalf of MiTek New Zealand Limited, and subject to:

i) All proprietary products meeting their performance specification requirements
ii) The provision of adequate roof bracing and overall building stability
iii) Correct selection and placement of GANG-NAIL connector plates
iv) Correct input of Truss Design Data as shown in the Fabricator Design Statement for this job
v) The design being undertaken by the accredited fabricator under the terms of the software licence
vi) Timber is graded to the requirements of NZS 3603:1993
vii) Minimum timber treatment for these MiTek® trusses shall be in accordance with B2/AS1 Table 1A and the relevant sections of NZS 3602:2003

I believe on reasonable grounds that the trusses, if constructed in accordance with the MiTek 20/20® truss design and shop drawings, will comply with the relevant provisions of the New Zealand Building Code.

MiTek New Zealand Limited holds a current policy of Professional Indemnity Insurance no less than $500,000.

On behalf of MiTek New Zealand Limited, **Date: Wednesday, December 30, 2020**

In Ling Ng, BE (Hons), CPEng, IntPE, MIPENZ (ID: 146585)
TECHNICAL SERVICES MANAGER, MiTek New Zealand Limited

Job: 334171C1
Client: GJ Gardner (Sudfelt Const)
Phone:
Site: Edge
Lot 8 Sampsons Way
Dargaville
Phone:
Description:
Building Consent No.:
MiTek 20/20 Engineering 4.7.301.0
MiTek New Zealand Limited
Printed: 19:55:25 30 Dec 2020

MITEK FABRICATOR DESIGN STATEMENT

This statement is issued by MiTek accredited fabricator **CARTERS**, being licensed to use the MiTek 20/20® software, to the client listed above and may be used by the Building Consent Authority to assist in determining compliance with the New Zealand Building Code.

KDC - Approved Building Consent Document - BC210208 - Pg 92 of 114 - 12/07/2021 - Ccmp NZ

MiTek 20/20® TRUSS DESIGN DATA

The MiTek 20/20® computer design for this job is based on the following design parameters entered into the program. The Fabricator shall ensure that these job details are current and relevant to the project for the design of the MiTek ® trusses.

Job Details

Importance Level : 2

Design Working Life : 50 years

Roof Truss

Timber Group:	MSG8 DDP H1.2	Pitch:	25.000 deg	Nominal Overhang:	600 mm
Roof		**Ceiling**		**Wind**	
Material:	Metal Tiles	Material:	Gib 13mm/Rondo Screwed	Area:	High (44.0 m/s)
Dead Load:	0.210 kPa	Dead Load:	0.200 kPa	Pressure Coeff:	Cpe = varies; Cpi = -0.30, 0.20
Restraints:	400 mm centres	Restraints:	600 mm centres		
Live Load:	Qur = 0.250 kPa Qc = 1.100 kN	Live Load:	Qc = 1.400 kN		

The minimum timber treatment for these MiTek® trusses shall be in accordance with B2/AS1 Table 1A and the relevant sections of NZS 3602:2003. The timber for these MiTek® trusses shall be graded to the requirements of NZS 3603:1993. Proprietary fixings and timber connectors shall be selected in accordance with NZS3604:2011 Section 4 - Durability.

MiTek® Truss List

Legend: * = detail only, ? = input only, ~~Txx~~ = failed design, Ø = non certified, Unmarked trusses = designed successfully, LB = lateral bracing required
GB = gable brace required

Truss	Qty	Span (mm)	Pitch (deg)	Spacing (mm)	Truss	Qty	Span (mm)	Pitch (deg)	Spacing (mm)	Truss	Qty	Span (mm)	Pitch (deg)	Spacing (mm)
GT1	1	6150	25.000	900	J2	1	2152	25.000	900	J5B	1	1927	25.000	900
GT2	1	9300	25.000	900	J2A	1	2152	25.000	900	J5C	2	1927	25.000	900
J4	1	2827	25.000	900	J2B	1	2152	25.000	900	T3	3	6150	25.000	900
J4B	1	2827	25.000	900	J2C	1	2152	25.000	900	T3A	2	6150	25.000	900
J4C	1	2827	25.000	900	J3	1	1252	25.000	900	V1	1	1305	25.000	900
J4D	1	2827	25.000	900	J3A	1	1252	25.000	900	*HB1	2	5165	18.249	900
T1	1	9300	25.000	900	J3B	1	1252	25.000	900	*HB2	1	2483	18.249	900
T2	3	9300	25.000	717	J3C	1	1252	25.000	900	*HB3	3	7393	18.249	900
T4	3	5630	25.000	900	J4A	1	2827	25.000	900	*R1	1	965	25.000	900
TG1	1	9300	25.000	900	J4E	1	2827	25.000	900	*R1A	1	965	25.000	900
TR1	1	9300	25.000	900	J4F	1	2827	25.000	900	*R2	2	1640	25.000	900
TR1A	1	9300	25.000	900	J4G	1	2827	25.000	900	*R2A	1	1640	25.000	900
J1	1	3052	25.000	900	J4H	2	2827	25.000	900	*R3	3	913	25.000	900
J1A	1	3052	25.000	900	J5	2	1927	25.000	900	*R3A	3	913	25.000	900
J1B	1	3052	25.000	900	J5A	1	1927	25.000	900	*R4	1	1541	25.000	900

Total quantity : 63

The computer design input has been carried out by:

MiTek 20/20 Software Operator: Administrator

MiTek Candidate Number and Qualifications:

Accredited Fabricator:

CARTERS
Your Building Partner

Wednesday, December 30, 2020

Job: 334171C1
Client: GJ Gardner (Sudfelt Const)
Phone:
Site: Edge
Lot 8 Sampsons Way
Dargaville
Description:
Building Consent No.:
Phone:

TRUSS FIXING SELECTION REPORT - Characteristic Loads

Fixings are selected from the LUMBERLOK Brochure 08/2014 (Timber Connectors Characteristic Loadings Data)

MiTek® Truss List

Legend: * = detail only, ? = input only, ~~Txx~~ = failed design, Ø = non certified, Unmarked trusses = designed successfully

Truss	Qty	Span (mm)	Joint	Down (kN)	Uplift (kN)	Bearing	Fixing Qty	Fixing Selected
GT1	1	6150	B	6.307	6.160	Cross	1	CT200 pair
			F	6.307	6.160	Cross	1	CT200 pair
GT2	1	9300	B	8.167	7.388	Cross	1	CT200 pair
			I	10.645	10.015	Cross	1	CT200 pair
J4	1	2827	A	5.334	4.485	Cross	1	CT200 pair
			C	6.003	5.488	Butt	1	Pair of MultiGrips
J4B	1	2827	B	2.586	0.573	Cross	1	Pair of Wire Dog Staples
			F	0.245	0.392	Butt	1	Pair of 3.15d Nails
			D	1.815	2.378	Cross	1	Pair of Wire Dog Staples
			E	0.733	1.231	Cross	1	Pair of Wire Dog Staples
J4C	1	2827	B	2.601	0.849	Cross	1	Pair of Wire Dog Staples
			E	0.269	0.367	Butt	1	Pair of 3.15d Nails
			D	2.110	2.484	Cross	1	Pair of Wire Dog Staples
J4D	1	2827	B	2.601	0.849	Cross	1	Pair of Wire Dog Staples
			E	0.269	0.367	Butt	1	Pair of 3.15d Nails
			D	2.110	2.484	Cross	1	Pair of Wire Dog Staples
T1	1	9300	B	5.433	4.707	Cross	1	CT200 pair
			F	5.433	4.707	Cross	1	CT200 pair
T2	3	9300	B	4.327	3.748	Cross	3	CT200 pair
			F	4.327	3.748	Cross	3	CT200 pair
T4	3	5630	B	3.447	2.870	Cross	3	Pair of Wire Dog Staples
			J	3.057	2.817	Butt	3	JH 47x90
TG1	1	9300	B	5.060	4.966	Cross	1	CT200 pair
			G	4.205	4.043	Cross	1	CT200 pair
			P	10.746	11.605	Cross	1	16kN Truss to Top Plate
TR1	1	9300	B	5.430	4.708	Cross	1	CT200 pair
			G	5.432	4.708	Cross	1	CT200 pair
TR1A	1	9300	B	4.646	4.150	Cross	1	CT200 pair
			G	4.513	4.053	Cross	1	CT200 pair
			K	1.702	1.213	Cross	1	Pair of Wire Dog Staples
J1	1	3052	B	3.000	2.190	Cross	1	Pair of Wire Dog Staples
			F	2.126	2.319	Butt	1	JH 47x90
J1A	1	3052	B	3.000	2.190	Cross	1	Pair of Wire Dog Staples
			F	2.126	2.319	Butt	1	JH 47x90
J1B	1	3052	B	2.681	1.201	Cross	1	Pair of Wire Dog Staples
			D	1.793	1.907	Butt	1	JH 47x90
J2	1	2152	B	2.551	1.337	Cross	1	Pair of Wire Dog Staples
			F	1.264	0.950	Butt	1	JH 47x90
J2A	1	2152	B	2.551	1.337	Cross	1	Pair of Wire Dog Staples
			F	1.264	0.950	Butt	1	JH 47x90
J2B	1	2152	B	2.486	0.870	Cross	1	Pair of Wire Dog Staples
			F	1.498	0.884	Butt	1	JH 47x90
			D	0.311	0.454	Butt	1	Pair of 3.15d Nails
J2C	1	2152	B	2.486	0.870	Cross	1	Pair of Wire Dog Staples
			F	1.498	0.884	Butt	1	JH 47x90
			D	0.311	0.454	Butt	1	Pair of 3.15d Nails
J3	1	1252	B	2.384	0.636	Cross	1	Pair of Wire Dog Staples
			D	0.569	0.224	Butt	1	Pair of 3.15d Nails
J3A	1	1252	B	2.384	0.636	Cross	1	Pair of Wire Dog Staples
			D	0.569	0.224	Butt	1	Pair of 3.15d Nails
J3B	1	1252	B	2.389	0.534	Cross	1	Pair of Wire Dog Staples
			D	0.365	0.036	Butt	1	Pair of 3.15d Nails
			C	0.397	0.706	Butt	1	Pair of 3.15d Nails
J3C	1	1252	B	2.389	0.534	Cross	1	Pair of Wire Dog Staples
			D	0.365	0.036	Butt	1	Pair of 3.15d Nails
			C	0.397	0.706	Butt	1	Pair of 3.15d Nails
J4A	1	2827	B	2.883	1.941	Cross	1	Pair of Wire Dog Staples
			F	1.788	1.909	Butt	1	JH 47x90
J4E	1	2827	B	2.628	1.118	Cross	1	Pair of Wire Dog Staples
			F	1.694	1.192	Butt	1	JH 47x90
			D	0.377	0.573	Butt	1	Pair of 3.15d Nails
J4F	1	2827	B	2.883	1.941	Cross	1	Pair of Wire Dog Staples
			F	1.788	1.909	Butt	1	JH 47x90
J4G	1	2827	B	2.883	1.941	Cross	1	Pair of Wire Dog Staples
			F	1.788	1.909	Butt	1	JH 47x90
J4H	2	2827	B	2.628	1.118	Cross	2	Pair of Wire Dog Staples
			F	1.694	1.192	Butt	2	JH 47x90
			D	0.377	0.573	Butt	2	Pair of 3.15d Nails
J5	2	1927	B	2.446	0.899	Cross	2	Pair of Wire Dog Staples
			E	1.037	0.660	Butt	2	JH 47x90
J5A	1	1927	B	2.447	0.788	Cross	1	Pair of Wire Dog Staples
			E	1.255	0.671	Butt	1	JH 47x90
			D	0.345	0.524	Butt	1	Pair of 3.15d Nails

KDC - Approved Building Consent Document - BC210208 - Pg 93 of 114 - 2/07/2021 - ComplyNZ

Job: 334171C1
Client: GJ Gardner (Sudfelt Const)
Phone:
Site: Edge
Lot 8 Sampsons Way
Dargaville
Description:
Building Consent No.:
Phone:

Truss	Qty	Span (mm)	Joint	Down (kN)	Uplift (kN)	Bearing	---------- Fixing ---------- Qty	Selected
J5B	1	1927	B	2.446	0.899	Cross	1	Pair of Wire Dog Staples
			E	1.037	0.660	Butt	1	JH 47x90
J5C	2	1927	B	2.447	0.788	Cross	2	Pair of Wire Dog Staples
			E	1.255	0.671	Butt	2	JH 47x90
			D	0.345	0.524	Butt	2	Pair of 3.15d Nails
T3	3	6150	B	3.712	3.131	Cross	3	Pair of Wire Dog Staples
			F	3.712	3.131	Cross	3	Pair of Wire Dog Staples
T3A	2	6150	B	3.360	2.863	Cross	2	Pair of Wire Dog Staples
			K	4.070	2.806	Cross	2	Pair of Wire Dog Staples
V1	1	1305	A			Wide		No fixing selected
*HB1	2	5165						Refer NZS3604:2011 Tables 10.1 & 10.14
*HB2	1	2483						Refer NZS3604:2011 Tables 10.1 & 10.14
*HB3	3	7393						Refer NZS3604:2011 Tables 10.1 & 10.14
*R1	1	965						Refer NZS3604:2011 Tables 10.1 & 10.14
*R1A	1	965						Refer NZS3604:2011 Tables 10.1 & 10.14
*R2	2	1640						Refer NZS3604:2011 Tables 10.1 & 10.14
*R2A	1	1640						Refer NZS3604:2011 Tables 10.1 & 10.14
*R3	3	913						Refer NZS3604:2011 Tables 10.1 & 10.14
*R3A	3	913						Refer NZS3604:2011 Tables 10.1 & 10.14
*R4	1	1541						Refer NZS3604:2011 Tables 10.1 & 10.14

Fixing List

Qty	Selected Fixing	Cost
19	CT 200 pair	29.64
1	Pair of MultiGrips	1.60
44	Pair of Wire Dog Staples	22.44
17	Pair of 3.15d Nails	0.68
22	JH 47x90	33.66
1	16kN Truss to Top Plate	7.18
1	No fixing selected	

Total		95.20

KDC - Approved Building Consent Document - BC210208 - Pg 94 of 114 - 7/07/2021 - ComplyNZ

Note:
1) Fixings have been selected based on loading only. Please check that selected fixings are practical for each situation and that appropriate nailing can be applied on site.
2) Fixings are selected from the LUMBERLOK Brochure 08/2014 (Timber Connectors Characteristic Loadings Data) with down and uplift characteristic loads of at least the values shown for each joint.

Buildable Truss Layout

KDC - Approved Building Consent Document - BC210208 - Pg 95 of 114 - 2/07/2021 - ComplyNZ

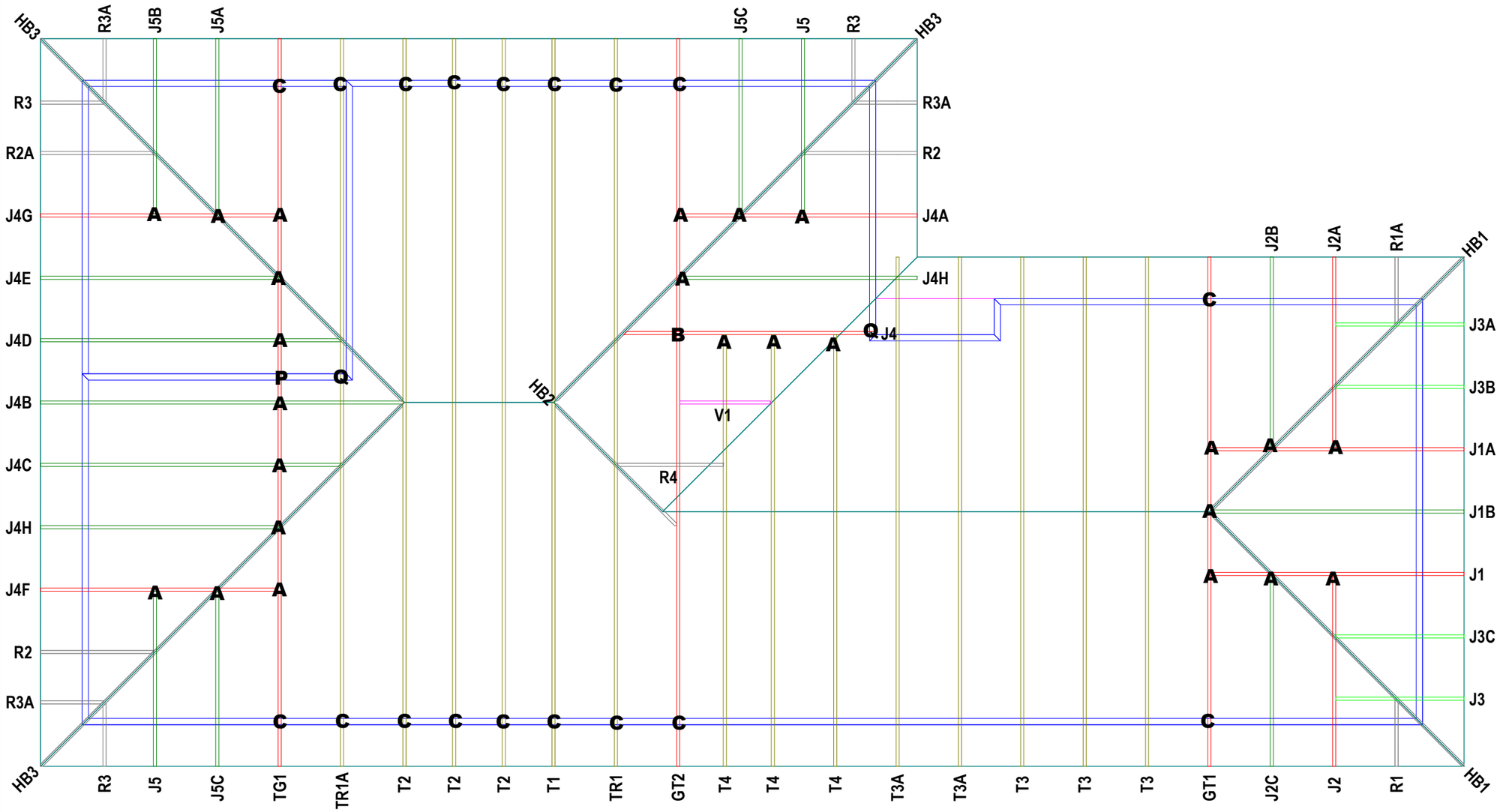

W=Wire dogs for top chord to top chord connections

CARTERS

32 Commerce St
Whangarei
Ph (09) 430 7716
Fax (09) 430 7720

JOB No	**334171C1**
Client:	GJ Gardner (Sudfelt Const)
Job Name:	Edge
Address:	Lot 8 Sampsons Way
Pitch:	25.0deg
Roof Material:	Metal Tiles
Soffit Overhang:	600
Wind Area:	High
Ceiling:	Gib 13mm/Rondo Screwed
B/chord restraints:	600
Drawn by:	Administrator
Date :	30 Dec,2020

Trusses And Rafters At 900 Centres
Unless Stated Otherwise.
This layout is to be read in conjunction with the Architectural plans.

PAGE 1 of 2

FIXINGS

Truss Fixing read inconjuction with truss hardware site pack supplied with trusses for fixing

A=47x90 JH
B=47x120 JH
C=CT200
D=47x190 JH
E=95x165 JH
S=Strut brace
G=SH-140 Split Hanger
H=SH-180 Split Hanger
K=SH-220 Split Hanger
L=6kn Strap
M=Multigrip
N=Nail On Plate
J=CPC 80
T=CPC 40 Short {Pair}
Q=9kn Pack
P=16kn
X=24kn uplift

All other truss fixings not indicated as above must have two wire dogs

NOTE

Please contact your local CARTERS Manufacturing Branch for any queries regarding this layout or if any on site remedial work is required.

No modifications to Roof Trusses or Wall Frames are to be undertaken without first obtaining written authority from CARTERS Manufacturing.

See Page 2 for Dimensions, Lintel Statement

KDC - Approved Building Consent Document - BC210208 - Pg 96 of 114 - 2/07/2021 - ComplyNZ

Buildable Truss Layout

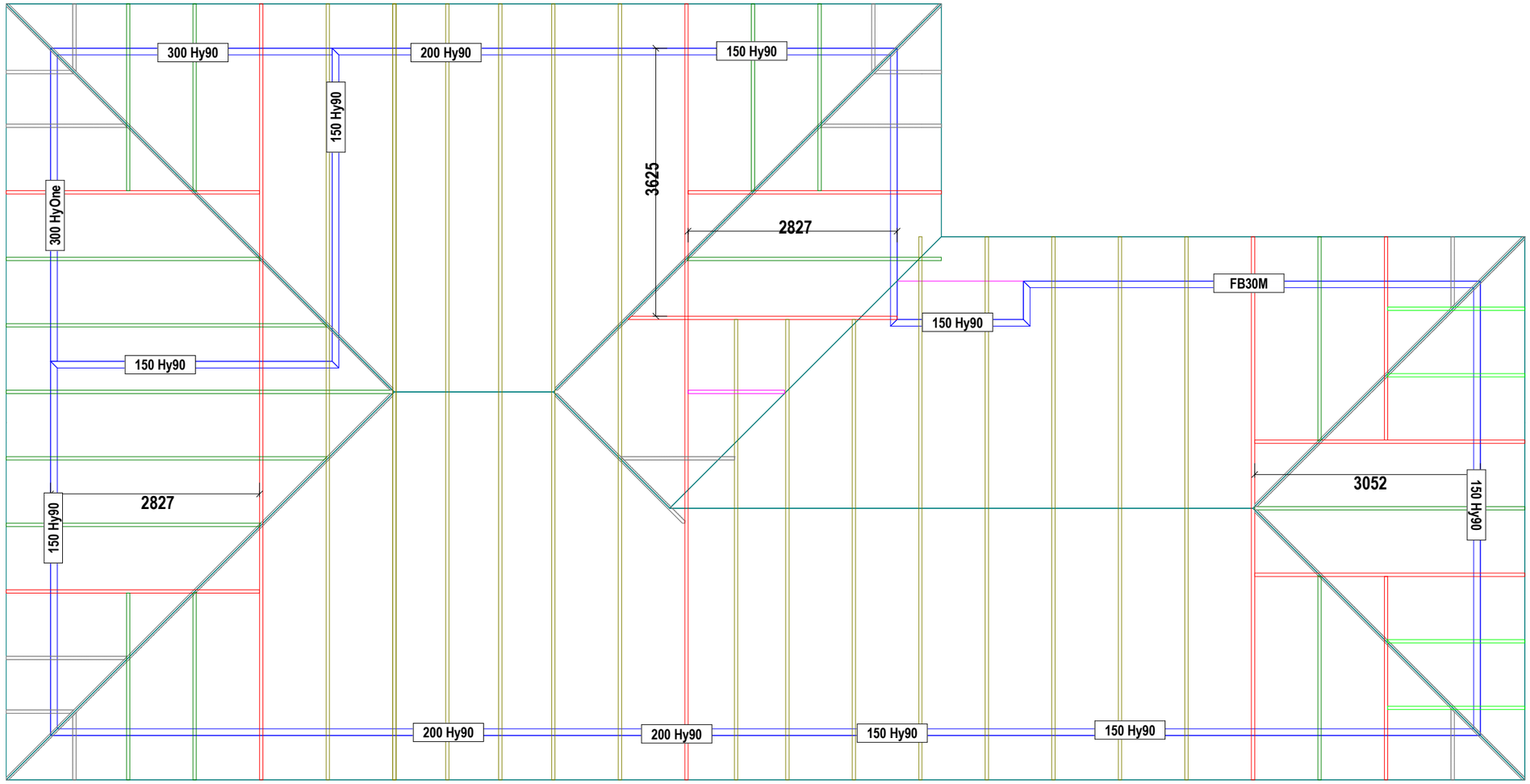

NOTIFICATION OF POINT LOADS TO INTERNAL WALLS
IN EXCESS OF 10kN
Ref.Mitek structural fixings on-site guide for building code compliance
2012 edition {Revised for NZS 3604:2011}

_kn down
_kn uplift
_no of studs under truss

Internal Loadbearing wall

CARTERS

32 Commerce St
Whangarei
Ph (09) 430 7716
Fax (09) 430 7720

JOB No 334171C1

Client: GJ Gardner (Sudfelt Const)
Job Name: Edge
Address: Lot 8 Sampsons Way

Pitch:	25.0deg
Roof Material:	Metal Tiles
Soffit Overhang:	600
Wind Area:	High
Ceiling:	Gib 13mm/Rondo Screwed
B/chord restraints:	600
Drawn by:	Administrator
Date :	30 Dec,2020

Trusses And Rafters At 900 Centres
Unless Stated Otherwise.
This layout is to be read in conjunction with the Architectural plans.

"Note"
if metal ceiling battens on clips are use,bottom chord restraints required @ 1800crs

PAGE 2 of 2

These lintels have been sized as per the GANGLAM 04/2008 and FLITCH BEAM V1.10 June 2011 selection manuals as provided by MiTek NZ Ltd.

HYSPAN and HY90 lintels have been sized using designIT v 6.3.5 NZ software or selection manuals, HYSPAN Edition 3 and HY90 E08/2006 as provided by CHH futurebuild.

Unless otherwise stated all lintels are to be selected as per NZS3604 2011.

All walls shown on this layout are considered to be load bearing.

See Page 1 for Truss Layout and Fixings

designIT® HOUSES

CarterHoltHarvey LVL

Date printed: 27 January 2021
Page 1 of 4

DESIGN CERTIFICATE

KDC - Approved Building Consent Document - BC214208 - 9/7/2021

Technical basis for structural design methodology contained in designIT for houses - New Zealand.

designIT for houses, New Zealand has been developed by experienced timber engineers to assist designers in selecting appropriate sizes of structural laminated veneer lumber products manufactured by Carter Holt Harvey LVL Limited (including hySPAN, hy90, hyONE and hyJOIST) and other generic stress grades of timber, to be used as structural elements for the construction of buildings that fall within the scope of NZS 3604.

The design methodology used for the software complies with the loading and general design requirements contained within AS/NZS 1170 and with timber structural design in accordance with NZS 3603:1993 including Amendment 4 (Verification method B1/VM1, 6.1).

designIT relies on the accurate input of span and loading information by the user. Where accurate inputs are submitted the product and/or stress grade and the size given will comply with the structural requirements of the New Zealand Building Code (NZBC), provided the installation is in accordance with the installation requirements provided by designIT and/or in product literature and/or NZS 3604, or specific engineering design, as appropriate.

Futurebuild LVL and SG8 components, when used and treated to the required treatment levels prescribed in NZS 3602 and NZS 3604, as modified by Acceptable Solution B2/AS1, will comply with the requirements of the NZBC (Acceptable Solution B2/AS1, 3.2).

References:
1. NZS 3603:1993 Timber Structures Standard.
2. NZS 3604:2011 Timber-framed buildings.
3. AS/NZS 1170:2002 Structural design actions, Parts 0 and 1.
4. AS/NZS 1170:2011 Structural design actions, Part 2: Wind actions.
5. AS/NZS 1170:2003 Structural design actions, Part 3: Snow and ice actions.
6. AS 1720.1:2010 Timber structures. Part 1: Design methods.
7. AS 1720.3:2016 Timber structures. Part 3: Design criteria for timber-framed residential buildings.

This Design Certificate, and any associated warranty/certification, is void where there has been substitution of alternate products not detailed within the Member Specification.

Version date: 13 November 2020

For further information or advice contact:
Carter Holt Harvey LVL Limited,
173 Captain Springs Road, Onehunga. Auckland
Telephone: 0800 808 131
Email: designit@futurebuild.co.nz
Web: https://futurebuild.co.nz/

Specifier details:

Specifier:	Stu Cooper
Business name:	Carters Whangarei
Email:	pro2nz12@gmail.com

Project & site details:

Project:	Edge
Site address:	Lot 8 Sampsons Way Dargaville
For (owner/s):	GJ Gardner
Design wind zone	High
Snow loading	Design snow zone: N0

MEMBER DESIGN DETAILS

Member 1

1) Member code and description L1 - Lintels - Supporting girder truss / truncated girder truss

designIT® HOUSES

CarterHoltHarvey LVL

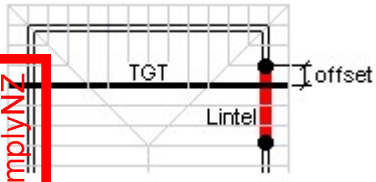

2) Date prepared 27 January 2021

3) Serviceability criteria AS 1720.1: 2010 and AS 1720.3: 2016

4) Design inputs

Roof type	Light roof and ceiling - 40 kg/m²
Roof pitch	25.0 °
Truss spacing	900 mm
Eaves overhang	600 mm
TGT span	9300 mm
TGT setback	2827 mm
TGT offset	727 mm
Lintel span	1315 mm
Nominal wall thickness	90 mm

5) Member specification

Size, stress grade/product	Use 200 x 90 hy90
Material type	Structural Laminated Veneer Lumber to AS/NZS 4357

6) Serviceability

Load case	Limit[3] on average deflection[2]	Estimated average deflection[2]	Rigidity ratio[4]
Long term load - G + $\Psi_L Q^*$	4.4 mm	0.7 mm (long term)	6.6
Live load - $\Psi_s Q$	5.3 mm	0.2 mm	26.0
Wind load - W_s	6.6 mm	0.6 mm	10.7

*Critical serviceability load case

See 'Notes for interpretation of serviceability data' at the end of this report

7) Reactions

Load case	k_1[1]	Limit States Design Reaction[2,3] End kN[4]
1.35G	0.60	-3.0
1.2G + 1.5Q	0.80	-4.7
1.2G + W_u + $\Psi_c Q$	1.00	-6.6
0.9G + W_u	1.00	4.2

8) Installation requirements

- Provide at least 30 mm bearing at end supports

KDC - Approved Building Consent Document - BC210268 - Pg 98 of 114 - 2/07/2021 - ComplyNZ

Member 2

1) Member code and description L2 - Lintels - In single or upper storey load bearing walls

2) Date prepared 27 January 2021

designIT® HOUSES

CarterHoltHarvey LVL

Date printed: 27 January 2021

3) Serviceability criteria AS 1720.1: 2010 and AS 1720.3: 2016

4) Design inputs

- Span 3.9 m
- Roof load width 'RLW' 3.0 m
- Roof type and mass Light roof and ceiling - 40 kg/m²
- Nominal wall thickness 90 mm

5) Member specification

- Size, stress grade/product Use 300 x 90 hy90
- Material type Structural Laminated Veneer Lumber to AS/NZS 4357

6) Serviceability

Load case	Limit[3] on average deflection[2]	Estimated average deflection[2]	Rigidity ratio[4]
Long term load - $G + \Psi_L Q^*$	10.0 mm	4.4 mm (long term)	2.3
Live load - $\Psi_s Q$	15.0 mm	1.2 mm	12.2
Wind load - W_s	19.5 mm	3.7 mm	5.3

*Critical serviceability load case

See 'Notes for interpretation of serviceability data' at the end of this report

7) Reactions

Load case	k_1[1]	Limit States Design Reaction[2,3] End kN[4]
1.35G	0.60	-3.8
1.2G + 1.5Q	0.80	-5.7
$1.2G + W_u + \Psi_c Q$	1.00	-7.9
$0.9G + W_u$	1.00	4.7

8) Installation requirements

- Provide at least 30 mm bearing at end supports

Member 3

1) Member code and description L3 - Lintels - In single or upper storey load bearing walls

2) Date prepared 27 January 2021

3) Serviceability criteria AS 1720.1: 2010 and AS 1720.3: 2016

4) Design inputs

- Span 4.3 m
- Roof load width 'RLW' 2.8 m
- Roof type and mass Light roof and ceiling - 40 kg/m²
- Nominal wall thickness 90 mm

5) Member specification

- Size, stress grade/product Use 300 x 90 hyONE
- Material type Structural Laminated Veneer Lumber to AS/NZS 4357

6) Serviceability

KDC - Approved Building Consent Document - BC210208 - Pg 99 of 114 - 2/07/2021 ComplyNZ

designIT® HOUSES

CarterHoltHarvey LVL

Date printed: 27 January 2021

Load case	Limit[3] on average deflection[2]	Estimated average deflection[2]	Rigidity ratio[4]
Long term load - G + $\Psi_L Q^*$	10.0 mm	3.6 mm (long term)	2.8
Live load - $\Psi_s Q$	15.0 mm	1.0 mm	15.3
Wind load - W_s	21.5 mm	3.0 mm	7.3

*Initial serviceability load case

See 'Notes for interpretation of serviceability data' at the end of this report

7) Reactions

Load case	k_1[1]	Limit States Design Reaction[2,3] End kN[4]
1.35G	0.60	-3.9
1.2G + 1.5Q	0.80	-5.9
1.2G + W_u + $\Psi_c Q$	1.00	-8.2
0.9G + W_u	1.00	4.8

8) Installation requirements

- Provide at least 30 mm bearing at end supports

Notes for interpretation of serviceability data

1. 'Average deflection' is an engineering concept based upon a notional estimated load, notional member rigidity and, in some cases, an approximate model of material response to environmental conditions. These parameters are, 'standardised' in AS 1170 and AS 1720.

2. Deflection is the flexural response to load 'out-of-level' measurements of installations are not necessarily deflections and can incorporate 'initial out-of-straightness', whether intended or not. Furthermore, loads can be higher/lower than the notional estimate and in any comparison with measured levels, material variability needs to also be considered. AS 1720 gives the following basis for estimation of upper bound deflections for various materials.

No 1 Framing – visually graded to NZS 3631	Average + 100%
SG grades - mechanically graded to AS/NZS 1748	Average + 43%
GL grades for glulam to AS 1328	Average + 33%
LVL to AS/NZS 4357 (includes hySPAN and hyJOIST)	Average +18%

As can be seen, comparison of the 'average deflection' for different materials, even if calculated on the same basis, does not give the whole picture!

3. The limits referred are those specified in AS 1720.3 for the stated load case.

4. 'Rigidity ratio' expresses the rigidity of the specified beam relative to the rigidity of a notional beam just meeting the serviceability requirements detailed.

Notes for interpretation of reaction data

1. Duration of load factor 'k_1' for strength as per NZS 3603:1993
2. Negative (-) reactions relate to the 'gravity' or 'downwards' force on the support
3. Positive reactions relate to the 'upwards' forces or 'tie-down' requirement on the support
4. End reaction includes allowance for overhang/cantilever where one has been designed

KDC - Approved Building Consent Document - BC2102108 - Pg 100 of 114 - 2/07/2021

Carters Whangarei

Job No: 334171C1 Client: GJ Gardner Site:
Job Name: Edge Building Consent No:

KDC - Approved Building Consent Document - BC210208 - Pg 101 of 114 - 2/07/2021 - ComplyNZ

DESIGN STATEMENT
MiTek Beam Program v1.11 September 2017

Certification of MiTek Beam Program v1.11 September 2017

The MiTek Beam Program v1.11 September 2017 has been developed by MiTek New Zealand Ltd for the design of these beams: Timber, Glulam, GANGLAM and GANG-NAIL FLITCH BEAMS. The beam designs calculated by this program are prepared using sound and widely accepted engineering principles, and in accordance with Compliance Documents of the New Zealand Building Code and Verification Method B1/VM1 to satisfy the requirements of Clause B1 of the Building Code. We believe on reasonable grounds that these beams for the proposed building, if constructed in accordance with the drawings, specifications and other documents provided will comply with the relevant provisions of the NZ Building Code. This is subject to all proprietary products meeting their performance specification requirements; the provision of adequate bracing and fixings; and the correct input of design data carried out by suitably trained personnel. This document may be used by the Building Consent Authority to assist in determining compliance with the New Zealand Building Code.

Summary of MiTek Beam Program v1.11 September 2017 Data and Output

Roof
Weight: light + ceiling
Dead Load: 0.45 kPa
Live Load: 0.25 kPa

Wind
Area/Speed: high (44.0 m/s)

Snow
Area: 0 kPa

Wall
Type: NA

Floor
Live Load: NA

Beam List

Opening Label	Beam Material	Beam Size	Beam Length	Design Status	Opening Label	Beam Material	Beam Size	Beam Length	Design Status
Garage Lintel	GN Flitch Beam	FB30M	4840	OKAY					

GANGLAM plating details indicated with RD (regular duty plating), HD (heavy duty plating) and SHD (super heavy duty plating)

The design input has been carried out by:

Signed:.....

Date: 27-01-21

Name of Computer Operator:

Qualifications and Title:

Company: Carters Whangarei

KDC - Approved Building Consent Document - BC210208 - Pg 102 of 114 - 2/07/2021 - ComplyNZ

MiTek Beam v1.10 June 2011

Date: Wednesday, 27 January 2021
Job Number 334171C1
Job Name Edge
Client GJ Gardner
Calculated By

Roof Weight light + ceiling
Wind Zone high (44.0 m/s)
Snow Load 0 kPa

Beam Details

Beam Label	Garage Lintel
Beam Span (mm)	4840
Roof Span "S" (mm)	6150
Overhang (mm)	600
Wall Type	
Wall Height (mm)	
Floor Live load	NA
Floor Span "F" (mm)	

MiTek Bearing Reactions

Not in use in this version

Point Load 1	
Girder Span (mm)	6150
Setback (mm)	3052
Location (mm)	2400
Point Load 2	
Girder Span (mm)	
Setback (mm)	
Location (mm)	
Point Load 3	
Girder Span (mm)	
Setback (mm)	
Location (mm)	
Beam Status	**OKAY**
Beam Material	GN Flitch Beam
Beam Size	FB30M
Beam Deflection	5.38mm
Beam Length	4840

designIT® HOUSES

CarterHoltHarvey LVL

DESIGN CERTIFICATE

KDC - Approved Building Consent Document - BC210208 - Pg 103 of 114 - 2021/2021 - ComplyNZ

Technical basis for structural design methodology contained in designIT for houses - New Zealand.

designIT for houses, New Zealand has been developed by experienced timber engineers to assist designers in selecting appropriate sizes of structural laminated veneer lumber products manufactured by Carter Holt Harvey LVL Limited (including hySPAN, hy90, hyONE and hyJOIST) and other generic stress grades of timber, to be used as structural elements for the construction of buildings that fall within the scope of NZS 3604.

The design methodology used for the software complies with the loading and general design requirements contained within AS/NZS 1170 and with timber structural design in accordance with NZS 3603:1993 including Amendment 4 (Verification method B1/VM1, 6.1).

designIT relies on the accurate input of span and loading information by the user. Where accurate inputs are submitted the product and/or stress grade and the size given will comply with the structural requirements of the New Zealand Building Code (NZBC), provided the installation is in accordance with the installation requirements provided by designIT and/or in product literature and/or NZS 3604, or specific engineering design, as appropriate.

Futurebuild LVL and SG8 components, when used and treated to the required treatment levels prescribed in NZS 3602 and NZS 3604, as modified by Acceptable Solution B2/AS1, will comply with the requirements of the NZBC (Acceptable Solution B2/AS1, 3.2).

References:
1. NZS 3603:1993 Timber Structures Standard.
2. NZS 3604:2011 Timber-framed buildings.
3. AS/NZS 1170:2002 Structural design actions, Parts 0 and 1.
4. AS/NZS 1170:2011 Structural design actions, Part 2: Wind actions.
5. AS/NZS 1170:2003 Structural design actions, Part 3: Snow and ice actions.
6. AS 1720.1:2010 Timber structures. Part 1: Design methods.
7. AS 1720.3:2016 Timber structures. Part 3: Design criteria for timber-framed residential buildings.

This Design Certificate, and any associated warranty/certification, is void where there has been substitution of alternate products not detailed within the Member Specification.

Version date: 29 March 2021

For further information or advice contact:
Carter Holt Harvey LVL Limited,
173 Captain Springs Road, Onehunga. Auckland
Telephone: 0800 808 131
Email: designit@futurebuild.co.nz
Web: https://futurebuild.co.nz/

Specifier details:

Specifier:	Stu Cooper
Business name:	Carters Whangarei
Email:	pro2nz12@gmail.com

Project & site details:

Project:	Edge
Site address:	Lot 8 Sampsons Way Dargaville
For (owner/s):	GJ Gardner
Design wind zone	High
Snow loading	Design snow zone: N0

MEMBER DESIGN DETAILS

Member 1

1) Member code and description Window 5 - Lintels - Supporting girder truss / truncated girder truss

designIT® HOUSES

CarterHoltHarvey LVL

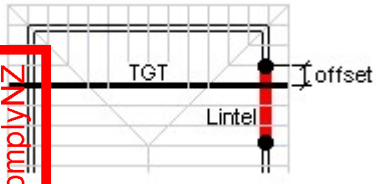

2) Date prepared 21 May 2021

3) Serviceability criteria AS 1720.1: 2010 and AS 1720.3: 2016

4) Design inputs

Roof type	Light roof and ceiling - 40 kg/m²
Roof pitch	25.0 °
Truss spacing	900 mm
Eaves overhang	600 mm
TGT span	9300 mm
TGT setback	2827 mm
TGT offset	727 mm
Lintel span	1315 mm
Nominal wall thickness	90 mm

5) Member specification

Size, stress grade/product	Use 200 x 90 hy90
Material type	Structural Laminated Veneer Lumber to AS/NZS 4357

6) Serviceability

Load case	Limit[3] on average deflection[2]	Estimated average deflection[2]	Rigidity ratio[4]
Long term load - G + $\Psi_L Q^*$	4.4 mm	0.7 mm (long term)	6.6
Live load - $\Psi_s Q$	5.3 mm	0.2 mm	26.0
Wind load - W_s	6.6 mm	0.6 mm	10.7

*critical serviceability load case
See 'Notes for interpretation of serviceability data' at the end of this report

7) Reactions

Load case	k_1[1]	Limit States Design Reaction[2,3] End kN[4]
1.35G	0.60	-3.0
1.2G + 1.5Q	0.80	-4.7
1.2G + W_u + $\Psi_c Q$	1.00	-6.6
0.9G + W_u	1.00	4.2

8) Installation requirements

- Provide at least 30 mm bearing at end supports

KDC - Approved Building Consent Document - BC210208 - Pg 104 of 114 - 2/07/2021 - ComplyNZ

Member 2

1) Member code and description Alfresco Beam - Long - Lintels - In single or upper storey load bearing walls

2) Date prepared 21 May 2021

designIT® HOUSES

CarterHoltHarvey LVL

3) Serviceability criteria AS 1720.1: 2010 and AS 1720.3: 2016

4) Design inputs

- Span 3.9 m
- Roof load width 'RLW' 3.0 m
- Roof type and mass Light roof and ceiling - 40 kg/m²
- Nominal wall thickness 90 mm

5) Member specification

- Size, stress grade/product Use 300 x 90 hy90
- Material type Structural Laminated Veneer Lumber to AS/NZS 4357

6) Serviceability

Load case	Limit[3] on average deflection[2]	Estimated average deflection[2]	Rigidity ratio[4]
Long term load - G + $\Psi_L Q^*$	10.0 mm	4.4 mm (long term)	2.3
Live load - $\Psi_s Q$	15.0 mm	1.2 mm	12.2
Wind load - W_s	19.5 mm	3.7 mm	5.3

*Critical serviceability load case
See 'Notes for interpretation of serviceability data' at the end of this report

7) Reactions

Load case	k_1[1]	Limit States Design Reaction[2,3] End kN[4]
1.35G	0.60	-3.8
1.2G + 1.5Q	0.80	-5.7
1.2G + W_u + $\Psi_c Q$	1.00	-7.9
0.9G + W_u	1.00	4.7

8) Installation requirements

- Provide at least 30 mm bearing at end supports

Member 3

1) Member code and description Alfresco Beam - Short - Lintels - In single or upper storey load bearing walls

2) Date prepared 21 May 2021

3) Serviceability criteria AS 1720.1: 2010 and AS 1720.3: 2016

4) Design inputs

- Span 4.3 m
- Roof load width 'RLW' 2.8 m
- Roof type and mass Light roof and ceiling - 40 kg/m²
- Nominal wall thickness 90 mm

5) Member specification

- Size, stress grade/product Use 300 x 90 hyONE
- Material type Structural Laminated Veneer Lumber to AS/NZS 4357

6) Serviceability

KDC - Approved Building Consent Document - BC210208 - 105 of 114 - 2/07/2021 - ComplyNZ

designIT® HOUSES

CarterHoltHarvey LVL

Load case	Limit[3] on average deflection[2]	Estimated average deflection[2]	Rigidity ratio[4]
Long term load - G + $\Psi_L Q^*$	10.0 mm	3.6 mm (long term)	2.8
Live load - $\Psi_s Q$	15.0 mm	1.0 mm	15.3
Wind load - W_s	21.5 mm	3.0 mm	7.3

*Critical serviceability load case
See 'Notes for interpretation of serviceability data' at the end of this report

7) Reactions

Load case	k_1[1]	Limit States Design Reaction[2,3] End kN[4]
1.35G	0.60	-3.9
1.2G + 1.5Q	0.80	-5.9
1.2G + W_u + $\Psi_c Q$	1.00	-8.2
0.9G + W_u	1.00	4.8

8) Installation requirements

- Provide at least 30 mm bearing at end supports

KDS - Approved Building Consent Document - BC210238 - Pg 106 of 114 - 2/07/2021

Member 4

1) Member code and description — Door 3 - Lintels - In single or upper storey load bearing walls

2) Date prepared — 21 May 2021

3) Serviceability criteria — AS 1720.1: 2010 and AS 1720.3: 2016

4) Design inputs

- Span — 1.8 m
- Roof load width 'RLW' — 1.0 m
- Roof type and mass — Light roof and ceiling - 40 kg/m²
- Nominal wall thickness — 90 mm

5) Member specification

- Size, stress grade/product — Use 150 x 90 hy90
- Material type — Structural Laminated Veneer Lumber to AS/NZS 4357

6) Serviceability

Load case	Limit[3] on average deflection[2]	Estimated average deflection[2]	Rigidity ratio[4]
Long term load - G + $\Psi_L Q^*$	6.0 mm	0.6 mm (long term)	10.9
Live load - $\Psi_s Q$	7.2 mm	0.1 mm	49.6
Wind load - W_s	9.0 mm	0.4 mm	20.5

*Critical serviceability load case
See 'Notes for interpretation of serviceability data' at the end of this report

7) Reactions

Load case	k_1[1]	Limit States Design Reaction[2,3] End kN[4]
1.35G	0.60	-0.8
1.2G + 1.5Q	0.80	-1.2
1.2G + W_u + $\Psi_c Q$	1.00	-1.7

0.9G + W_u	1.00	1.0

5) Installation requirements
- Provide at least 30 mm bearing at end supports

Member 5

1) Member code and description Door 4 - Lintels - In single or upper storey load bearing walls

2) Date prepared 21 May 2021

3) Serviceability criteria AS 1720.1: 2010 and AS 1720.3: 2016

4) Design inputs
- Span 1.8 m
- Roof load width 'RLW' 1.0 m
- Roof type and mass Light roof and ceiling - 40 kg/m²
- Nominal wall thickness 90 mm

5) Member specification
- Size, stress grade/product Use 150 x 90 hy90
- Material type Structural Laminated Veneer Lumber to AS/NZS 4357

6) Serviceability

Load case	Limit[3] on average deflection[2]	Estimated average deflection[2]	Rigidity ratio[4]
Long term load - G + Ψ_{LQ}*	6.0 mm	0.6 mm (long term)	10.9
Live load - Ψ_sQ	7.2 mm	0.1 mm	49.6
Wind load - W_s	9.0 mm	0.4 mm	20.5

*Critical serviceability load case
See 'Notes for interpretation of serviceability data' at the end of this report

7) Reactions

Load case	k_1[1]	Limit States Design Reaction[2,3] End kN[4]
1.35G	0.60	-0.8
1.2G + 1.5Q	0.80	-1.2
1.2G + W_u + Ψ_cQ	1.00	-1.7
0.9G + W_u	1.00	1.0

8) Installation requirements
- Provide at least 30 mm bearing at end supports

Member 6

1) Member code and description Window 3 - Lintels - In single or upper storey load bearing walls

2) Date prepared 21 May 2021

3) Serviceability criteria AS 1720.1: 2010 and AS 1720.3: 2016

4) Design inputs

KDC - Approved Building Consent Document - BC210208 - Pg 107 of 114 - 24/07/2021 - ComplyNZ

designIT® HOUSES

CarterHoltHarvey LVL

KDC - Approved Building Consent Document - BC210208 - Pg 1084 of 1148 - 2/07/2021 - ComplyNZ

Span 1.5 m
Roof load width 'RLW' 2.3 m
Roof type and mass Light roof and ceiling - 40 kg/m²
Nominal wall thickness 90 mm

5) Member specification

Size, stress grade/product Use 150 x 90 hy90
Material type Structural Laminated Veneer Lumber to AS/NZS 4357

6) Serviceability

Load case	Limit[3] on average deflection[2]	Estimated average deflection[2]	Rigidity ratio[4]
Long term load - G + $\Psi_L Q^*$	5.0 mm	0.7 mm (long term)	7.6
Live load - $\Psi_s Q$	6.0 mm	0.2 mm	31.0
Wind load - W_s	7.5 mm	0.6 mm	12.9

Critical serviceability load case
See 'Notes for interpretation of serviceability data' at the end of this report

7) Reactions

Load case	k_1[1]	Limit States Design Reaction[2,3] End kN[4]
1.35G	0.60	-1.4
1.2G + 1.5Q	0.80	-2.2
1.2G + W_u + $\Psi_c Q$	1.00	-3.1
0.9G + W_u	1.00	1.9

8) Installation requirements

- Provide at least 30 mm bearing at end supports

Member 7

1) Member code and description Window 2 - Lintels - In single or upper storey load bearing walls

2) Date prepared 21 May 2021

3) Serviceability criteria AS 1720.1: 2010 and AS 1720.3: 2016

4) Design inputs

Span 1.5 m
Roof load width 'RLW' 5.8 m
Roof type and mass Light roof and ceiling - 40 kg/m²
Nominal wall thickness 90 mm

5) Member specification

Size, stress grade/product Use 150 x 90 hy90
Material type Structural Laminated Veneer Lumber to AS/NZS 4357

6) Serviceability

Load case	Limit[3] on average deflection[2]	Estimated average deflection[2]	Rigidity ratio[4]
Long term load - G + $\Psi_L Q^*$	5.0 mm	1.6 mm (long term)	3.1

designIT® HOUSES

CarterHoltHarvey LVL

Live load - $\Psi_s Q$	6.0 mm	0.5 mm	12.3
Wind load - W_s	7.5 mm	1.5 mm	5.1

*Critical serviceability load case
See 'Notes for interpretation of serviceability data' at the end of this report

7) Reactions

Load case	k_1[1]	Limit States Design Reaction[2,3] End kN[4]
1.35G	0.60	-3.5
1.2G + 1.5Q	0.80	-5.4
1.2G + W_u + $\Psi_c Q$	1.00	-7.7
0.9G + W_u	1.00	5.0

8) Installation requirements
- Provide at least 30 mm bearing at end supports

KDC / Approved Building Consent Document - BC210208 - Pg 589 of 1150 - 2/07/2021 - ComplyNZ

Member 8

1) Member code and description — Window 4 - Lintels - In single or upper storey load bearing walls

2) Date prepared — 21 May 2021

3) Serviceability criteria — AS 1720.1: 2010 and AS 1720.3: 2016

4) Design inputs

Span	1.5 m
Roof load width 'RLW'	5.8 m
Roof type and mass	Light roof and ceiling - 40 kg/m²
Nominal wall thickness	90 mm

5) Member specification

Size, stress grade/product	Use 150 x 90 hy90
Material type	Structural Laminated Veneer Lumber to AS/NZS 4357

6) Serviceability

Load case	Limit[3] on average deflection[2]	Estimated average deflection[2]	Rigidity ratio[4]
Long term load - G + $\Psi_L Q$*	5.0 mm	1.6 mm (long term)	3.1
Live load - $\Psi_s Q$	6.0 mm	0.5 mm	12.3
Wind load - W_s	7.5 mm	1.5 mm	5.1

*Critical serviceability load case
See 'Notes for interpretation of serviceability data' at the end of this report

7) Reactions

Load case	k_1[1]	Limit States Design Reaction[2,3] End kN[4]
1.35G	0.60	-3.5
1.2G + 1.5Q	0.80	-5.4
1.2G + W_u + $\Psi_c Q$	1.00	-7.7
0.9G + W_u	1.00	5.0

8) Installation requirements

designIT® HOUSES

CarterHoltHarvey LVL

- Provide at least 30 mm bearing at end supports

KDC - Approved Building Consent Document - BC210208 - Pg 110 of 114 - 2/07/2021 - ComplyNZ

Member 9

1) Member code and description Window 1 - Lintels - In single or upper storey load bearing walls

2) Date prepared 21 May 2021

3) Serviceability criteria AS 1720.1: 2010 and AS 1720.3: 2016

4) Design inputs

Span	1.5 m
Roof load width 'RLW'	1.8 m
Roof type and mass	Light roof and ceiling - 40 kg/m²
Nominal wall thickness	90 mm

5) Member specification

Size, stress grade/product	Use 150 x 90 hy90
Material type	Structural Laminated Veneer Lumber to AS/NZS 4357

6) Serviceability

Load case	Limit[3] on average deflection[2]	Estimated average deflection[2]	Rigidity ratio[4]
Long term load - G + $\Psi_L Q$*	5.0 mm	0.5 mm (long term)	9.5
Live load - $\Psi_s Q$	6.0 mm	0.2 mm	39.7
Wind load - W_s	7.5 mm	0.5 mm	16.4

*Critical serviceability load case

See 'Notes for interpretation of serviceability data' at the end of this report

7) Reactions

Load case	k_1[1]	Limit States Design Reaction[2,3] End kN[4]
1.35G	0.60	-1.1
1.2G + 1.5Q	0.80	-1.7
1.2G + W_u + $\Psi_c Q$	1.00	-2.4
0.9G + W_u	1.00	1.5

8) Installation requirements

- Provide at least 30 mm bearing at end supports

Member 10

1) Member code and description Window 8 - Lintels - In single or upper storey load bearing walls

2) Date prepared 21 May 2021

3) Serviceability criteria AS 1720.1: 2010 and AS 1720.3: 2016

4) Design inputs

Span	0.6 m
Roof load width 'RLW'	1.2 m

designIT® HOUSES

CarterHoltHarvey LVL

Roof type and mass	Light roof and ceiling - 40 kg/m²
Nominal wall thickness	90 mm

5) Member specification

Size, stress grade/product	Use 150 x 90 hy90
Material type	Structural Laminated Veneer Lumber to AS/NZS 4357

6) Serviceability

Load case	Limit[3] on average deflection[2]	Estimated average deflection[2]	Rigidity ratio[4]
Long term load - G + Ψ_{LQ}*	2.0 mm	0.0 mm (long term)	92.1
Live load - Ψ_sQ	2.4 mm	0.0 mm	371.9
Wind load - W_s	3.0 mm	0.0 mm	154.0

*Critical serviceability load case
See 'Notes for interpretation of serviceability data' at the end of this report

7) Reactions

Load case	k_1[1]	Limit States Design Reaction[2,3] End kN[4]
1.35G	0.60	-0.5
1.2G + 1.5Q	0.80	-0.8
1.2G + W_u + Ψ_cQ	1.00	-1.1
0.9G + W_u	1.00	0.7

8) Installation requirements

- Provide at least 30 mm bearing at end supports

Member 11

1) Member code and description	Door 2 - Lintels - In single or upper storey load bearing walls
2) Date prepared	21 May 2021
3) Serviceability criteria	AS 1720.1: 2010 and AS 1720.3: 2016

4) Design inputs

Span	1.0 m
Roof load width 'RLW'	4.3 m
Roof type and mass	Light roof and ceiling - 40 kg/m²
Nominal wall thickness	90 mm

5) Member specification

Size, stress grade/product	Use 150 x 90 hy90
Material type	Structural Laminated Veneer Lumber to AS/NZS 4357

6) Serviceability

Load case	Limit[3] on average deflection[2]	Estimated average deflection[2]	Rigidity ratio[4]
Long term load - G + Ψ_{LQ}*	3.3 mm	0.4 mm (long term)	9.5
Live load - Ψ_sQ	4.0 mm	0.1 mm	37.4
Wind load - W_s	5.0 mm	0.3 mm	15.5

KDC - Approved Building Consent Document - BC210208 Pg 111 of 114 - 22/07/2021 - ComplyNZ

designIT® HOUSES

CarterHoltHarvey LVL

*Critical serviceability load case
See 'Notes for interpretation of serviceability data' at the end of this report

7) Reactions

Load case	k_1[1]	Limit States Design Reaction[2,3] End kN[4]
1.35G	0.60	-2.2
1.2G + 1.5Q	0.80	-3.5
1.2G + W_u + Ψ_cQ	1.00	-4.9
0.9G + W_u	1.00	3.2

8) Installation requirements
- Provide at least 30 mm bearing at end supports

KDC - Approved Building Consent Document - BC210308 Pg 113 of 114 - 2/07/2021 ComplyNZ

Member 12

1) Member code and description — Window 6 - Lintels - In single or upper storey load bearing walls

2) Date prepared — 21 May 2021

3) Serviceability criteria — AS 1720.1: 2010 and AS 1720.3: 2016

4) Design inputs

Span	1.5 m
Roof load width 'RLW'	4.3 m
Roof type and mass	Light roof and ceiling - 40 kg/m²
Nominal wall thickness	90 mm

5) Member specification

Size, stress grade/product	Use 150 x 90 hy90
Material type	Structural Laminated Veneer Lumber to AS/NZS 4357

6) Serviceability

Load case	Limit[3] on average deflection[2]	Estimated average deflection[2]	Rigidity ratio[4]
Long term load - G + Ψ_LQ*	5.0 mm	1.2 mm (long term)	4.2
Live load - Ψ_sQ	6.0 mm	0.4 mm	16.6
Wind load - W_s	7.5 mm	1.1 mm	6.9

*Critical serviceability load case
See 'Notes for interpretation of serviceability data' at the end of this report

7) Reactions

Load case	k_1[1]	Limit States Design Reaction[2,3] End kN[4]
1.35G	0.60	-2.6
1.2G + 1.5Q	0.80	-4.0
1.2G + W_u + Ψ_cQ	1.00	-5.7
0.9G + W_u	1.00	3.7

8) Installation requirements
- Provide at least 30 mm bearing at end supports

designIT® HOUSES

CarterHoltHarvey LVL

Member 13

1) Member code and description Door 5 - Lintels - In single or upper storey load bearing walls

2) Date prepared 21 May 2021

3) Serviceability criteria AS 1720.1: 2010 and AS 1720.3: 2016

4) Design inputs

Span	1.0 m
Roof load width 'RLW'	4.3 m
Roof type and mass	Light roof and ceiling - 40 kg/m²
Nominal wall thickness	90 mm

5) Member specification

Size, stress grade/product	Use 150 x 90 hy90
Material type	Structural Laminated Veneer Lumber to AS/NZS 4357

6) Serviceability

Load case	Limit[3] on average deflection[2]	Estimated average deflection[2]	Rigidity ratio[4]
Long term load - G + Ψ_{LQ}*	3.3 mm	0.4 mm (long term)	9.5
Live load - $\Psi_{s}Q$	4.0 mm	0.1 mm	37.4
Wind load - W_s	5.0 mm	0.3 mm	15.5

*Critical serviceability load case
See 'Notes for interpretation of serviceability data' at the end of this report

7) Reactions

Load case	k_1[1]	Limit States Design Reaction[2,3] End kN[4]
1.35G	0.60	-2.2
1.2G + 1.5Q	0.80	-3.5
1.2G + W_u + Ψ_cQ	1.00	-4.9
0.9G + W_u	1.00	3.2

8) Installation requirements

- Provide at least 30 mm bearing at end supports

Member 14

1) Member code and description Window 7 - Lintels - In single or upper storey load bearing walls

2) Date prepared 21 May 2021

3) Serviceability criteria AS 1720.1: 2010 and AS 1720.3: 2016

4) Design inputs

Span	1.5 m
Roof load width 'RLW'	2.4 m
Roof type and mass	Light roof and ceiling - 40 kg/m²
Nominal wall thickness	90 mm

5) Member specification

KDC - Approved Building Consent Document - BC 203208 - Pg 113 of 114 - 2/07/2021 CompliNZ

designIT® HOUSES

CarterHoltHarvey LVL

Size, stress grade/product	Use 150 x 90 hy90
Material type	Structural Laminated Veneer Lumber to AS/NZS 4357

KDC - Approved Building Consent Document - BC210208 - Pg 114 of 114 - 3/07/2021 - Comply NZ

6) Serviceability

Load case	Limit[3] on average deflection[2]	Estimated average deflection[2]	Rigidity ratio[4]
Long term load - G + $\Psi_L Q$*	5.0 mm	0.7 mm (long term)	7.3
Live load - $\Psi_s Q$	6.0 mm	0.2 mm	29.8
Wind load - W_s	7.5 mm	0.6 mm	12.3

*Critical serviceability load case
See 'Notes for interpretation of serviceability data' at the end of this report

7) Reactions

Load case	k_1[1]	Limit States Design Reaction[2,3] End kN[4]
1.35G	0.60	-1.5
1.2G + 1.5Q	0.80	-2.3
1.2G + W_u + $\Psi_c Q$	1.00	-3.2
0.9G + W_u	1.00	2.0

8) Installation requirements

- Provide at least 30 mm bearing at end supports

Notes for interpretation of serviceability data

1. 'average deflection' is an engineering concept based upon a notional estimated load, notional member rigidity and, in some cases, an approximate model of material response to environmental conditions. These parameters are, 'standardised' in AS 1170 and AS 1720.

2. Deflection is the flexural response to load 'out-of-level' measurements of installations are not necessarily deflections and can incorporate 'initial out-of-straightness', whether intended or not. Furthermore, loads can be higher/lower than the notional estimate and in any comparison with measured levels, material variability needs to also be considered. AS 1720 gives the following basis for estimation of upper bound deflections for various materials.

No 1 Framing – visually graded to NZS 3631	Average + 100%
SG grades - mechanically graded to AS/NZS 1748	Average + 43%
GL grades for glulam to AS 1328	Average + 33%
LVL to AS/NZS 4357 (includes hySPAN and hyJOIST)	Average +18%

As can be seen, comparison of the 'average deflection' for different materials, even if calculated on the same basis, does not give the whole picture!

3. The limits referred are those specified in AS 1720.3 for the stated load case.

4. 'Rigidity ratio' expresses the rigidity of the specified beam relative to the rigidity of a notional beam just meeting the serviceability requirements detailed.

Notes for interpretation of reaction data

1. Duration of load factor 'k_1' for strength as per NZS 3603:1993
2. Negative (-) reactions relate to the 'gravity' or 'downwards' force on the support
3. Positive reactions relate to the 'upwards' forces or 'tie-down' requirement on the support
4. End reaction includes allowance for overhang/cantilever where one has been designed

G.J. Gardner. HOMES

NEW HOME FOR

EDGE & RANDELL

AT

LOT 8 SAMPSONS WAY
DARGAVILLE

INDEX

PLAN	LAYOUT NAME
1	SITE PLAN
2	FLOOR PLAN
3	ELEVATIONS
4	ELEVATIONS
5	ELECTRICAL PLAN
6	PLUMBING & DRAINAGE
7	PLUMBING & DRAINAGE AS-BUILT
8	WALL FRAMING PLAN
9	BRACING PLAN
10	BRACING CALCULATIONS
11	LINTEL & BEAM PLAN
12	TRUSS DESIGN
13	ROOF PLAN
14	SECTIONS
15	DETAILS - WALL FRAMING SET OUT
16	DETAILS - FRAMING FIXINGS
17	DETAILS - CLADDING
18	DETAILS - CLADDING
19	DETAILS - CLADDING
20	DETAILS - CLADDING
21	DETAILS - CLADDING
22	DETAIL - WET AREA
23	FOUNDATION
24	DETAILS - FOUNDATION
25	DETAILS - FOUNDATION
26	DETAILS - FOUNDATION

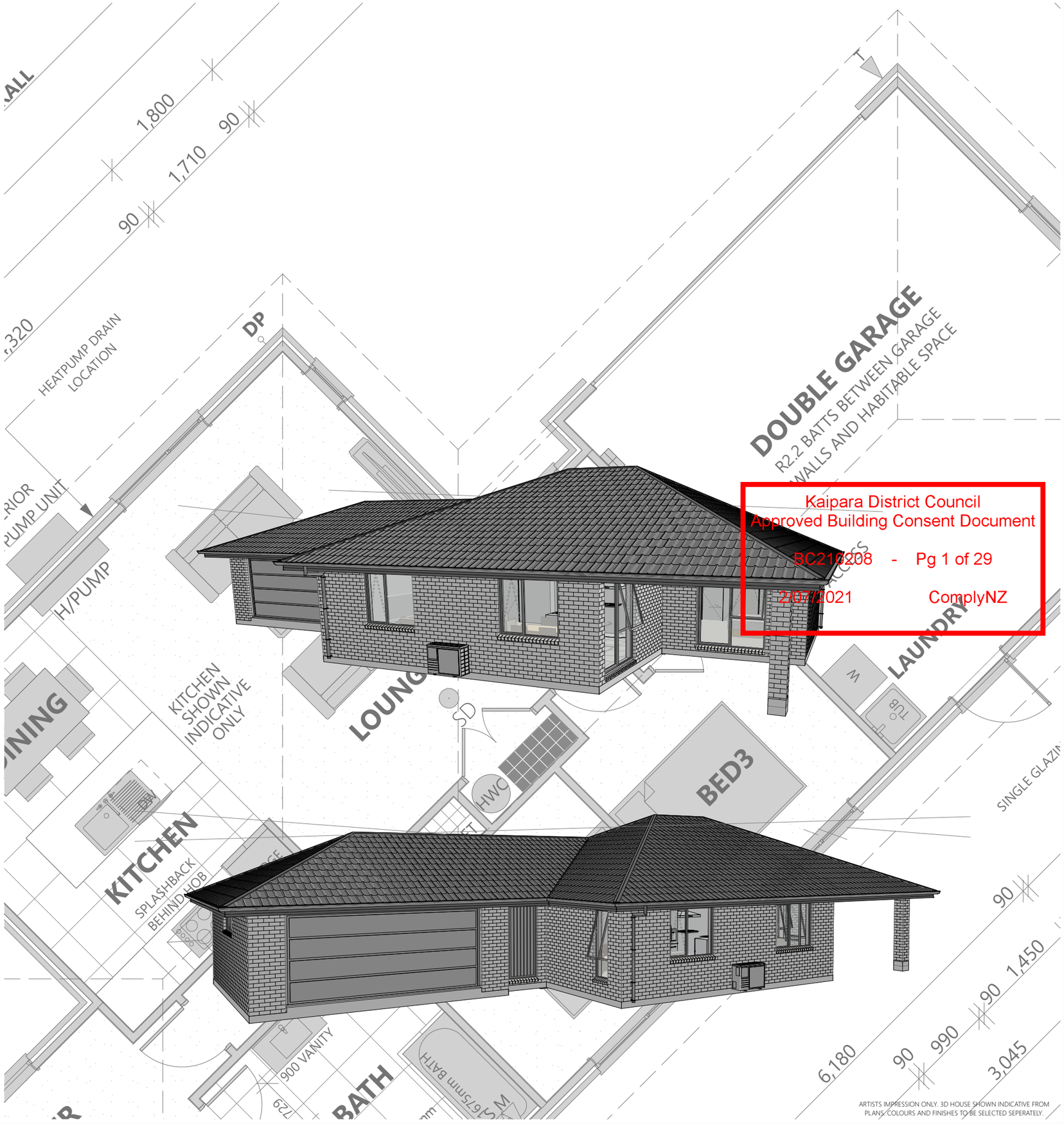

Kaipara District Council
Approved Building Consent Document
BC210208 - Pg 1 of 29
2/07/2021 ComplyNZ

ARTISTS IMPRESSION ONLY. 3D HOUSE SHOWN INDICATIVE FROM PLANS. COLOURS AND FINISHES TO BE SELECTED SEPERATELY.

SHAPE SITE TO ASSIST IN STORMWATER RUN-OFF AWAY FROM THE BUILDING PLATFORM

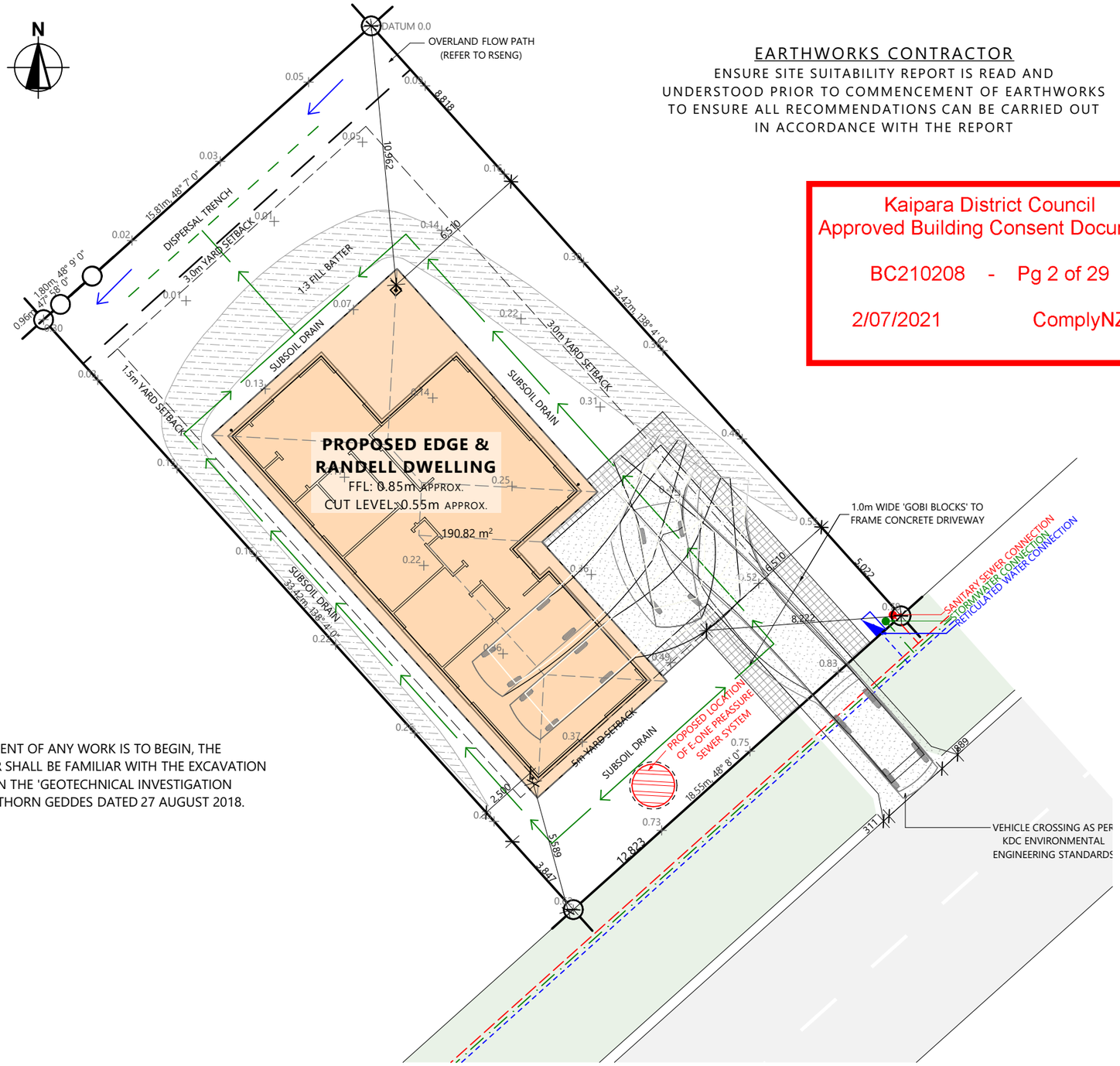

EARTHWORKS CONTRACTOR

ENSURE SITE SUITABILITY REPORT IS READ AND UNDERSTOOD PRIOR TO COMMENCEMENT OF EARTHWORKS TO ENSURE ALL RECOMMENDATIONS CAN BE CARRIED OUT IN ACCORDANCE WITH THE REPORT

Kaipara District Council
Approved Building Consent Document

BC210208 - Pg 2 of 29

2/07/2021 ComplyNZ

SITE LOCATION

DISTRICT PLAN

ZONE:	RESIDENTIAL
BUILDING COVERAGE	**PERMITTED**
MAX ALLOWED **35%** OF 619m² SITE	
FLOOR AREA O/FOUNDATION:	**145.0m²**
FLOOR AREA O/FRAMING:	138.0m²
ACTUAL BUILDING COVERAGE:	**23%**
IMPERMEABLE AREA	**PERMITTED**
HOUSE AREA OVER EAVES:	190.8m²
CONCRETE DRIVE/PATH (NOT UNDER EAVES):	58.2m²
TOTAL IMPERMEABLE:	249.0m²
TOTAL IMPERMEABLE COVERAGE:	**40%**

EARTHWORKS

SILT CONTROL

85m² OF TROWEL FINISHED CONCRETE WITH 5kg/m³ BLACK OXIDE INCLUDED BY G.J'S

DRIVEWAY 81m²

TOTAL SHOWING 81m²

40% IMPERMIABLE SITE COVERAGE REACHED WITH 4m² CONCRETE REMAINING, AVAILABLE TO COVERED AREAS ONLY.

SITE WORKS NOTES:

- BEFORE THE COMMENCEMENT OF ANY WORK IS TO BEGIN, THE EARTHWORKS CONTRACTOR SHALL BE FAMILIAR WITH THE EXCAVATION WORKS REQUIRED BASED ON THE 'GEOTECHNICAL INVESTIGATION REPORT' PROVIDED BY HAWTHORN GEDDES DATED 27 AUGUST 2018.

SITE CONCEPT ONLY - SUBJECT TO ENGINEERS APPROVAL

G.J. Gardner. HOMES

COPYRIGHT - THIS DRAWING REMAINS THE PROPERTY OF G.J. GARDNER HOMES AND IS PROVIDED FOR THE USE DESCRIBED AND MAY NOT BE USED OR REPRODUCED IN WHOLE OR IN PART WITHOUT PERMISSION

SUDFELT CONSTRUCTION LTD
WHANGAREI / KAIPARA
FRANCHISEE FOR
G.J.GARDNER HOMES
14 PERCY STREET,
KENSINGTON
P (09) 437 5666
www.gjgardner.co.nz

ALL CONSTRUCTION TO COMPLY WITH THE LOCAL AUTHORITY REQUIREMENTS, NZ BUILDING CODE/APPROVED DOCUMENTS, AND MEANS OF COMPLIANCE, INCL. NZS3604:2011

ALL DIMENSION AND LEVELS ARE TO BE CHECKED BY CONTRACTOR PRIOR TO COMMENCEMENT OF WORK. CONTRACTOR TO REPORT ANY DISCREPANCY.

DO NOT SCALE OFF PLANS

NEW DWELLING FOR
EDGE & RANDELL
LOT 8 SAMPSONS WAY
DARGAVILLE
KAIPARA

CONSENT

LEGAL DESCRIPTION
LOT NUMBER: **8**
DP NUMBER: **542244**

SITE INFORMATION
SITE AREA: **619m²**
CORROSION: **C**
DISTRICT PLAN ZONE: **RESIDENTIAL**
WIND ZONE: **HIGH**

SITE PLAN

JOB No: **390076**
SHEET SIZE: **A3**
SCALE: **1:200, 1:1000, 1:100, 1:1**
DRAWN: **C. LIENERT**
PUBLISHED: **30/06/2021**
SHEET: 1
CHECKED:

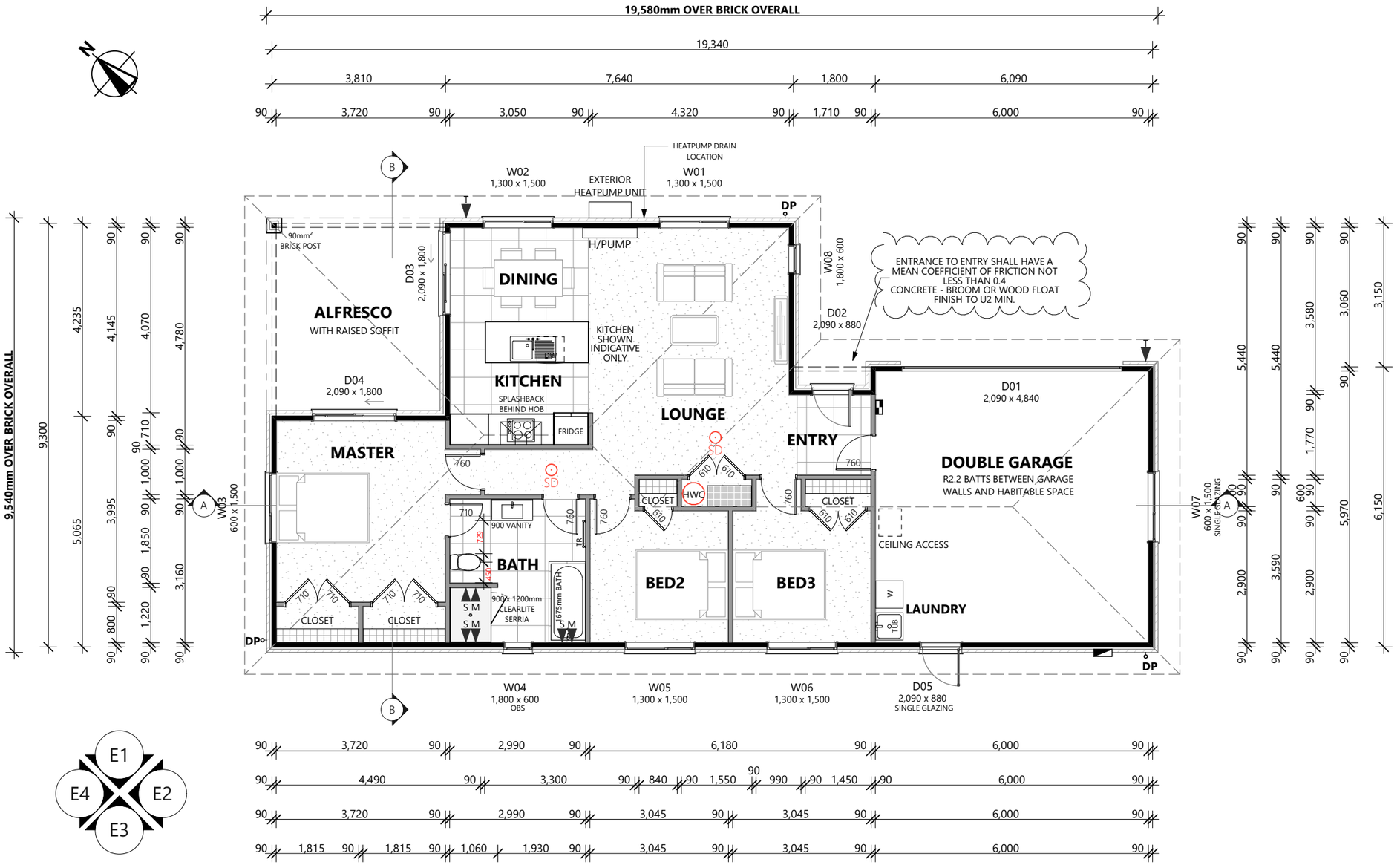

FLOOR PLAN NOTES

FLOOR AREAS (PORCH NOT INCLUDED)

FLOOR AREA O/FRAMING:	138.0m²
FLOOR AREA O/FOUNDATION:	145.0m²
ROOF PLAN AREA:	190.8m²
EXTERNAL STUD HEIGHT	2440mm
INTERNAL STUD HEIGHT	2410mm

FLOOR KEY

- TILED AREA
- UNSEALED ORIGINAL CONCRETE SLAB
- CARPET AREA SELECTED FROM BUILDERS RANGE

SD 9V SMOKE DETECTOR
TO BE WITHIN 3.0M FROM BEDROOM DOORS AND BEFORE AN ESCAPE PATH MAY BECOME BLOCKED BY SMOKE.

S SPOUT
M MIXER
T EXTERNAL TAP

WALL FRAMING KEY

EXTERNAL 90mm TIMBER FRAME WITH SELECTED 70 SERIES BRICK VENEER OVER A 50mm CAVITY.
SELECTED FIBRE CEMENT BEVEL BACK WEATHERBOARD OVER A 20mm CAVITY ABOVE JOINERY IN ALFRESCO
(ALL EXCEPT GARAGE INSULATED)

INTERNAL 90mm LOAD BEARING WALL

INTERNAL 90mm NON-LOAD BEARING WALL

REFER TO WALL FRAMING PLAN TO FRAMING SIZE, SETOUT, GRADE AND TIMBER TREATMENT. REFER TO ELEVATIONS FOR CLADDING SPECIFICATIONS.

Kaipara District Council
Approved Building Consent Document

BC210208 - Pg 3 of 29

2/07/2021 ComplyNZ

EXPRESS SPECIFICATION SHELVING

- 3 x OXYGENE VENTILATED WIRE SHELVES IN SILVER LINEN SHELVES
- 1 x WARDROBE OXYGENE VENTILATED WIRE SHELF IN SILVER

G.J. Gardner. HOMES

COPYRIGHT - THIS DRAWING REMAINS THE PROPERTY OF G.J. GARDNER HOMES AND IS PROVIDED FOR THE USE DESCRIBED AND MAY NOT BE USED OR REPRODUCED IN WHOLE OR IN PART WITHOUT PERMISSION

SUDFELT CONSTRUCTION LTD
WHANGAREI / KAIPARA
FRANCHISEE FOR
G.J.GARDNER HOMES
14 PERCY STREET,
KENSINGTON
P (09) 437 5666
www.gjgardner.co.nz

ALL CONSTRUCTION TO COMPLY WITH THE LOCAL AUTHORITY REQUIREMENTS, NZ BUILDING CODE/APPROVED DOCUMENTS, AND MEANS OF COMPLIANCE, INCL. NZS3604:2011

ALL DIMENSION AND LEVELS ARE TO BE CHECKED BY CONTRACTOR PRIOR TO COMMENCEMENT OF WORK. CONTRACTOR TO REPORT ANY DISCREPANCY.

DO NOT SCALE OFF PLANS

NEW DWELLING FOR
EDGE & RANDELL
LOT 8 SAMPSONS WAY
DARGAVILLE
KAIPARA

CONSENT

LEGAL DESCRIPTION
LOT NUMBER: **8**
DP NUMBER: **542244**

SITE INFORMATION
SITE AREA: **619m²**
CORROSION: **C**
DISTRICT PLAN ZONE: **RESIDENTIAL**
WIND ZONE: **HIGH**

FLOOR PLAN

JOB No: **390076**
SHEET SIZE: **A3**
SCALE: **1:100**
DRAWN: **C. LIENERT**
PUBLISHED: **28/04/2021**
SHEET: 2
CHECKED:

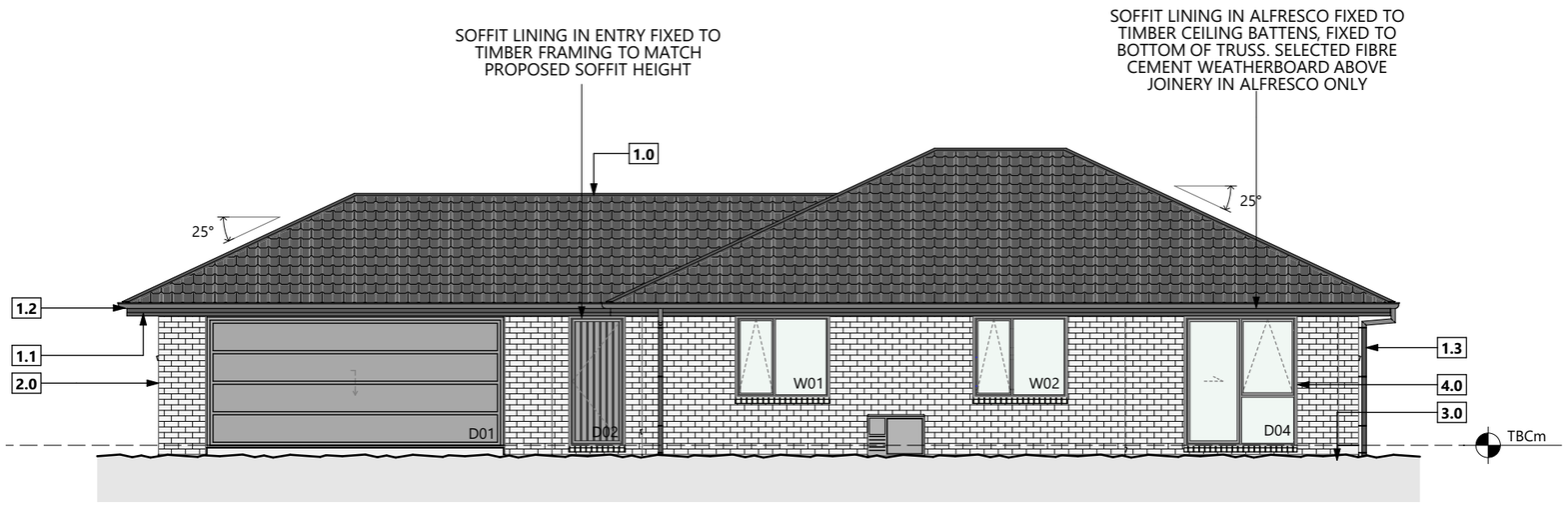

Elevation 1

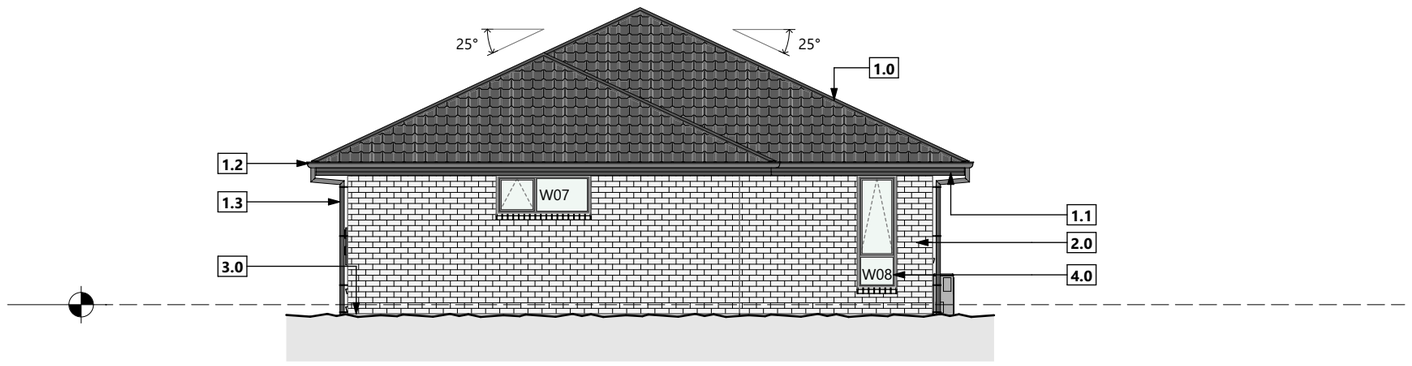

Elevation 2

BUILDING ENVELOPE RISK MATRIX
Worst Case Senario

Risk Factor	Risk Severity	Risk Score
Wind zone (per NZS 3604)	High risk	1
Number of storeys	Low risk	0
Roof/wall intersection design	Low	0
Eaves width	Low risk	0
Envelope complexity	Low risk	0
Deck design	Low risk	0
Total Risk Score:		**1**

ELEVATION NOTES:

1.0 GERARD PRESSED METAL TILE ROOF OVER BATTENS OVER SELECTED ROOFING UNDERLAY

1.1 SELECTED FIBRE CEMENT 4.5mm SOFFIT LINING

1.2 CONTINUOUS SPOUTING QUARTER ROUND GUTTER ON COLORSTEEL FASCIA

1.3 80mmø ROUND uPVC DOWNPIPES

2.0 SELECTED 70 SERIES BRICK VENEER OVER A 50mm DRAINED CAVITY OVER SELECTED BREATHER TYPE BUILDING PAPER. BRICK VENEER SELECTED FROM BUILDERS RANGE

3.0 FIRTH RIBRAFT SLAB - REFER TO FOUNDATION PLAN FOR DETAILS

4.0 SELECTED POWDERCOATED ALUMINIUM JOINERY, ALL GLASS WINDOWS AND DOORS ARE TO BE DOUBLE GLAZED. ALL GLASS TO MEET NZS4223 SAFETY GLAZING.

BRICK TIES / WEEPHOLES:
BRICK TIES TO BE POSITIONED AS FOLLOWS

- 600mm HORIZONTALLY/ 400mm VERTICALLY
- WITHIN 200mm AROUND OPENING
- WITHIN THE TOP 2 MORTAR COURSES
- WITHIN THE BOTTOM 400mm OF VENEER
- TIES FOR 50mm CAVITY AND 70mm BRICK VENEER TO BE 105/115mm
- EVERY THIRD PERPEND TO BE LEFT OPEN ON THE SECOND COURSE FOR DRAINAGE/ VENTILATION
- LEAVE 3mm GAP TO SOFFIT OR LEAVE EVERY THIRD PERPEND OPEN
- VENTING IS REQUIRED UNDER OPENINGS WIDER THAN 2.4m

Kaipara District Council
Approved Building Consent Document
BC210208 - Pg 4 of 29
2/07/2021 ComplyNZ

G.J. Gardner. HOMES
COPYRIGHT - THIS DRAWING REMAINS THE PROPERTY OF G.J. GARDNER HOMES AND IS PROVIDED FOR THE USE DESCRIBED AND MAY NOT BE USED OR REPRODUCED IN WHOLE OR IN PART WITHOUT PERMISSION

SUDFELT CONSTRUCTION LTD
WHANGAREI / KAIPARA
FRANCHISEE FOR
G.J.GARDNER HOMES
14 PERCY STREET,
KENSINGTON
P (09) 437 5666
www.gjgardner.co.nz

ALL CONSTRUCTION TO COMPLY WITH THE LOCAL AUTHORITY REQUIREMENTS, NZ BUILDING CODE/APPROVED DOCUMENTS, AND MEANS OF COMPLIANCE, INCL. NZS3604:2011

ALL DIMENSION AND LEVELS ARE TO BE CHECKED BY CONTRACTOR PRIOR TO COMMENCEMENT OF WORK. CONTRACTOR TO REPORT ANY DISCREPANCY.

DO NOT SCALE OFF PLANS

NEW DWELLING FOR
EDGE & RANDELL
LOT 8 SAMPSONS WAY
DARGAVILLE
KAIPARA

CONSENT

LEGAL DESCRIPTION
LOT NUMBER: **8**
DP NUMBER: **542244**

SITE INFORMATION
SITE AREA: **619m²**
CORROSION: **C**
DISTRICT PLAN ZONE: **RESIDENTIAL**
WIND ZONE: **HIGH**

ELEVATIONS

JOB No: **390076**
SHEET SIZE: **A3**
SCALE: **1:100**
DRAWN: **C. LIENERT**
PUBLISHED: **12/04/2021**
SHEET: 3
CHECKED: MS

Elevation 3

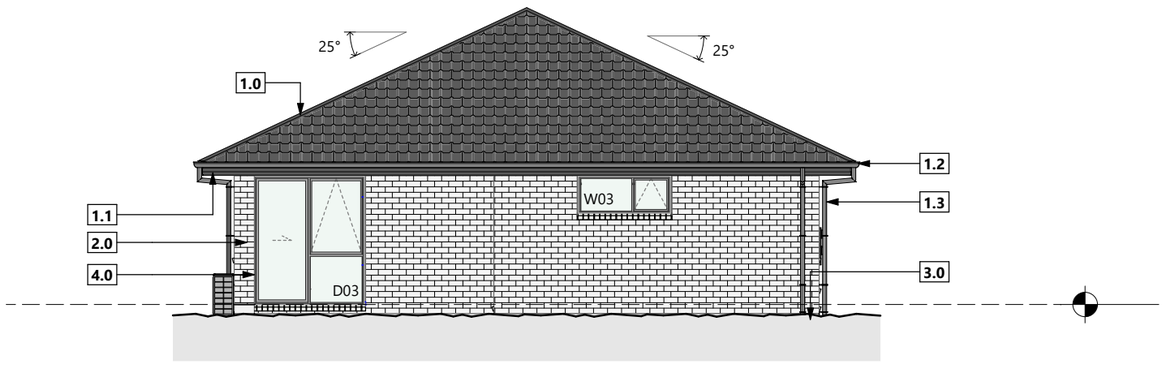

Elevation 4

ELEVATION NOTES:

1.0 GERARD PRESSED METAL TILE ROOF OVER BATTENS OVER SELECTED ROOFING UNDERLAY

1.1 SELECTED FIBRE CEMENT 4.5mm SOFFIT LINING

1.2 CONTINUOUS SPOUTING QUARTER ROUND GUTTER ON COLORSTEEL FASCIA

1.3 80mmø ROUND uPVC DOWNPIPES

2.0 SELECTED 70 SERIES BRICK VENEER OVER A 50mm DRAINED CAVITY OVER SELECTED BREATHER TYPE BUILDING PAPER. BRICK VENEER SELECTED FROM BUILDERS RANGE

3.0 FIRTH RIBRAFT SLAB - REFER TO FOUNDATION PLAN FOR DETAILS

4.0 SELECTED POWDERCOATED ALUMINIUM JOINERY, ALL GLASS WINDOWS AND DOORS ARE TO BE DOUBLE GLAZED. ALL GLASS TO MEET NZS4223 SAFETY GLAZING.

BRICK TIES / WEEPHOLES:

BRICK TIES TO BE POSITIONED AS FOLLOWS

- 600mm HORIZONTALLY/ 400mm VERTICALLY
- WITHIN 200mm AROUND OPENING
- WITHIN THE TOP 2 MORTAR COURSES
- WITHIN THE BOTTOM 400mm OF VENEER
- TIES FOR 50mm CAVITY AND 70mm BRICK VENEER TO BE 105/115mm
- EVERY THIRD PERPEND TO BE LEFT OPEN ON THE SECOND COURSE FOR DRAINAGE/ VENTILATION
- LEAVE 3mm GAP TO SOFFIT OR LEAVE EVERY THIRD PERPEND OPEN
- VENTING IS REQUIRED UNDER OPENINGS WIDER THAN 2.4m

Kaipara District Council
Approved Building Consent Document

BC210208 - Pg 5 of 29

2/07/2021 ComplyNZ

G.J. Gardner. HOMES

COPYRIGHT - THIS DRAWING REMAINS THE PROPERTY OF G.J. GARDNER HOMES AND IS PROVIDED FOR THE USE DESCRIBED AND MAY NOT BE USED OR REPRODUCED IN WHOLE OR IN PART WITHOUT PERMISSION

SUDFELT CONSTRUCTION LTD
WHANGAREI / KAIPARA
FRANCHISEE FOR
G.J.GARDNER HOMES
14 PERCY STREET,
KENSINGTON
P (09) 437 5666
www.gjgardner.co.nz

ALL CONSTRUCTION TO COMPLY WITH THE LOCAL AUTHORITY REQUIREMENTS, NZ BUILDING CODE/APPROVED DOCUMENTS, AND MEANS OF COMPLIANCE, INCL. NZS3604:2011

ALL DIMENSION AND LEVELS ARE TO BE CHECKED BY CONTRACTOR PRIOR TO COMMENCEMENT OF WORK. CONTRACTOR TO REPORT ANY DISCREPANCY.

DO NOT SCALE OFF PLANS

NEW DWELLING FOR
EDGE & RANDELL
LOT 8 SAMPSONS WAY
DARGAVILLE
KAIPARA

CONSENT

LEGAL DESCRIPTION
LOT NUMBER: **8**
DP NUMBER: **542244**

SITE INFORMATION
SITE AREA: **619m²**
CORROSION: **C**
DISTRICT PLAN ZONE: **RESIDENTIAL**
WIND ZONE: **HIGH**

ELEVATIONS

JOB No: **390076**
SHEET SIZE: **A3**
SCALE: **1:100**
DRAWN: **C. LIENERT**
PUBLISHED: **30/03/2021**
SHEET: 4
CHECKED: MS

NOTE:

- EXACT POSITION OF ALL LIGHTS, SWITCHES AND POWER POINTS TO BE DISCUSSED ON SITE BETWEEN CLIENT AND ELECTRICIAN

Kaipara District Council
Approved Building Consent Document

BC210208 - Pg 6 of 29

2/07/2021 ComplyNZ

ELECTRICAL KEY

	DISTRIBUTION BOX	x1
	METER BOX	x1
	LED RECESSED LUMINAIRES	x20
	DOUBLE OUTSIDE FLOODLIGHT WITH SENSOR	x1
2	TWIN POWER OUTLET	x20
F	FRIDGE - SINGLE OUTLET	x1
DW	DISHWASHER - SINGLE OUTLET	x1
R	RANGEHOOD - SINGLE OUTLET	x1
H	HOB - SINGLE OUTLET	x1
O	OVEN - SINGLE OUTLET	x1
PH	PHONE POINT	x2
TV	TV POINT	x2
HW	HOT WATER HEATER - SINGLE OUTLET	x1
HWC	MAIN PRESSURE 180l HOT WATER CYLINDER	x1
	MANROSE HEAT/FAN/LIGHT	x2
SD	SMOKE DETETOR	x2

A DAIKIN FTXM50 CORA HIGH WALL IS INCLUDED TO BE SUPPLIED AND INSTALLED BY GJ's

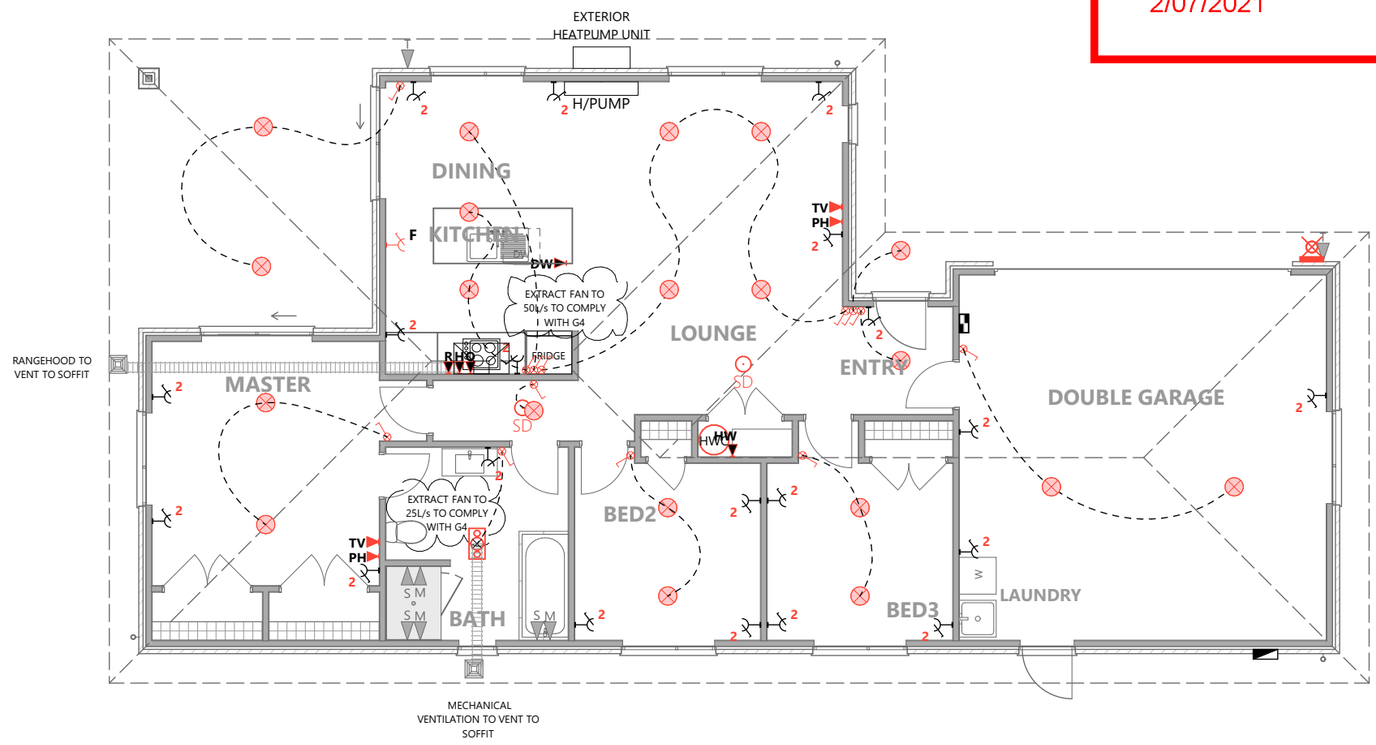

G.J. Gardner. HOMES

COPYRIGHT - THIS DRAWING REMAINS THE PROPERTY OF G.J. GARDNER HOMES AND IS PROVIDED FOR THE USE DESCRIBED AND MAY NOT BE USED OR REPRODUCED IN WHOLE OR IN PART WITHOUT PERMISSION

SUDFELT CONSTRUCTION LTD
WHANGAREI / KAIPARA
FRANCHISEE FOR
G.J.GARDNER HOMES
14 PERCY STREET,
KENSINGTON
P (09) 437 5666
www.gjgardner.co.nz

ALL CONSTRUCTION TO COMPLY WITH THE LOCAL AUTHORITY REQUIREMENTS, NZ BUILDING CODE/APPROVED DOCUMENTS, AND MEANS OF COMPLIANCE, INCL. NZS3604:2011

ALL DIMENSION AND LEVELS ARE TO BE CHECKED BY CONTRACTOR PRIOR TO COMMENCEMENT OF WORK. CONTRACTOR TO REPORT ANY DISCREPANCY.

DO NOT SCALE OFF PLANS

NEW DWELLING FOR
EDGE & RANDELL
LOT 8 SAMPSONS WAY
DARGAVILLE
KAIPARA

CONSENT

LEGAL DESCRIPTION
LOT NUMBER: **8**
DP NUMBER: **542244**

SITE INFORMATION
SITE AREA: **619m²**
CORROSION: **C**
DISTRICT PLAN ZONE: **RESIDENTIAL**
WIND ZONE: **HIGH**

ELECTRICAL PLAN

JOB No: **390076**
SHEET SIZE: **A3**
SCALE: **1:100**
DRAWN: **C. LIENERT**
PUBLISHED: **28/04/2021**
SHEET: 5
CHECKED:

Kaipara District Council
Approved Building Consent Document

BC210208 - Pg 7 of 29

2/07/2021 ComplyNZ

REFER TO SITE PLAN FOR SW AND SS CONNECTION POINTS

KEY:

ORG	OVERFLOW RELIEF GULLY
TV	TERMINAL VENT
DP	DOWN PIPE
RE	RODDING EYE
IP	INSPECTION POINT

TABLE 6.5.1
MINIMUM GRADES OF DISCHARGE PIPES

40mm ø	1:40 (2.5%)	25mm PER METER
65mm ø	1:40 (2.5%)	25mm PER METER
100mm ø	1:60 (1.65%)	17mm PER METER

FIXTURES & WASTE PIPE SIZING

WC =	100ø OUTLET
SHOWER =	40ø TRAP TO 65ø WASTE
BASIN =	40ø TRAP TO 65ø WASTE
SINK =	40ø TRAP TO 65ø WASTE
TUB =	40ø TRAP TO 65ø WASTE

NOTES:

PLUMBING TO NZBC G13/AS3 NZS3500.2
ALL WASTE PIPES PVC. SIZES, FALL, VENTING & DISCHARGE TO BE CONFIRMED BY NZ QUALIFIED PLUMBER.

WATER SUPPLY:

INTERNAL WATER PIPES TO BE POLYBUTYLENE

A POTABLE WATER SUPPLY SYSTEM SHALL BE -
(a) PROTECTED FROM CONTAMINATION; AND
(b) INSTALLED IN A MANNER WHICH AVOIDS THE LIKELIHOOD OF CONTAMINATION WITHIN THE SYSTEM AND THE WATER MAIN; AND
(c) INSTALLED USING COMPONENTS THAT WILL NOT CONTAMINATE WATER

TABLE 3.9.3.1
SIZE AND RATING OF VENTS

50ø TV FOR <30 FIXTURE UNITS
65ø TV FOR <175 FIXTURE UNITS

BATHROOM GROUP = 6 (x2)
SINK = 1 (x1)

BASIN = 1 (x1) (ADDITIONAL WC BASIN)

TUB = 5 (x1)
DISHWASHING MACHINE = 3 (x1)

=22

TABLE 4.6.3
MAXIMUM UNVENTED LENGTH OF WASTE PIPE

-BASIN OR BIDET WITH 40ø TRAP AND WASTE	3.5m
-ALL OTHER WASTE FIXTURES AND FLOOR WASTE GULLIES WITH 50ø OR SMALLER WASTE PIPES	6.0m
-FLOOR WASTE GULLIES AND FIXTURES WITH 65ø OR LARGER WASTE PIPES	10.0m

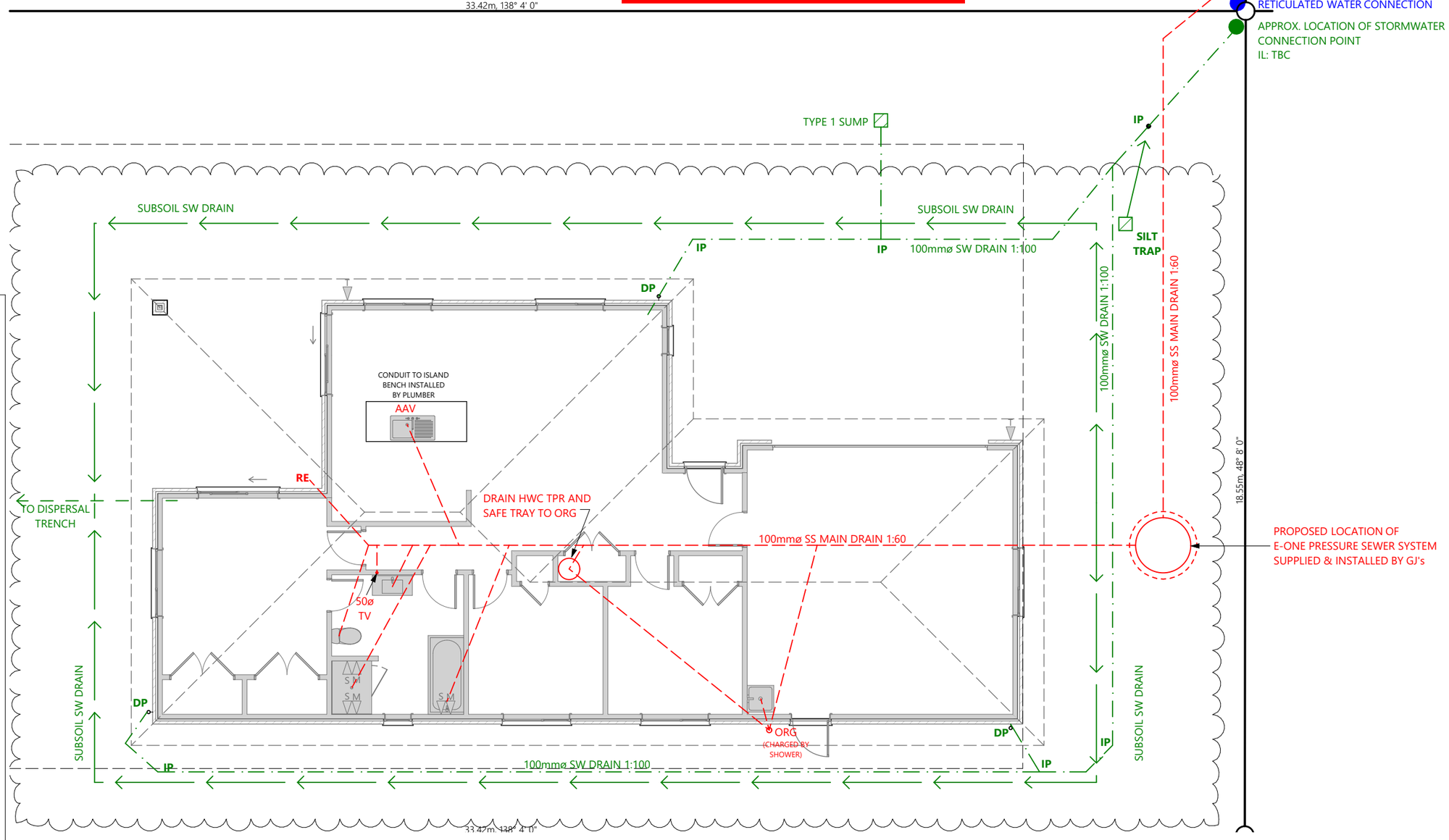

G.J. Gardner. HOMES

COPYRIGHT - THIS DRAWING REMAINS THE PROPERTY OF G.J. GARDNER HOMES AND IS PROVIDED FOR THE USE DESCRIBED AND MAY NOT BE USED OR REPRODUCED IN WHOLE OR IN PART WITHOUT PERMISSION

SUDFELT CONSTRUCTION LTD
WHANGAREI / KAIPARA
FRANCHISEE FOR
G.J.GARDNER HOMES
14 PERCY STREET,
KENSINGTON
P (09) 437 5666
www.gjgardner.co.nz

ALL CONSTRUCTION TO COMPLY WITH THE LOCAL AUTHORITY REQUIREMENTS, NZ BUILDING CODE/APPROVED DOCUMENTS, AND MEANS OF COMPLIANCE, INCL. NZS3604:2011

ALL DIMENSION AND LEVELS ARE TO BE CHECKED BY CONTRACTOR PRIOR TO COMMENCEMENT OF WORK. CONTRACTOR TO REPORT ANY DISCREPANCY.

DO NOT SCALE OFF PLANS

NEW DWELLING FOR
EDGE & RANDELL
LOT 8 SAMPSONS WAY
DARGAVILLE
KAIPARA

CONSENT

LEGAL DESCRIPTION

LOT NUMBER:	DP NUMBER:
8	**542244**

SITE INFORMATION

SITE AREA:	CORROSION:
619m²	**C**
DISTRICT PLAN ZONE:	WIND ZONE:
RESIDENTIAL	**HIGH**

PLUMBING & DRAINAGE

JOB No:	**390076**
SHEET SIZE:	**A3**
SCALE:	**1:100**
DRAWN:	**C. LIENERT**
PUBLISHED:	**30/06/2021**

SHEET: 6

CHECKED:

APPROX. LOCATION OF SANITARY SEWER CONNECTION POINT
IL: TBC

RETICULATED WATER CONNECTION

APPROX. LOCATION OF STORMWATER CONNECTION POINT
IL: TBC

33.42m, 138° 4' 0"

15.81m, 48° 7' 0"

1.80m, 48° 9' 0"

0.94m, 47° 58' 0"

18.55m, 138° 8' 0"

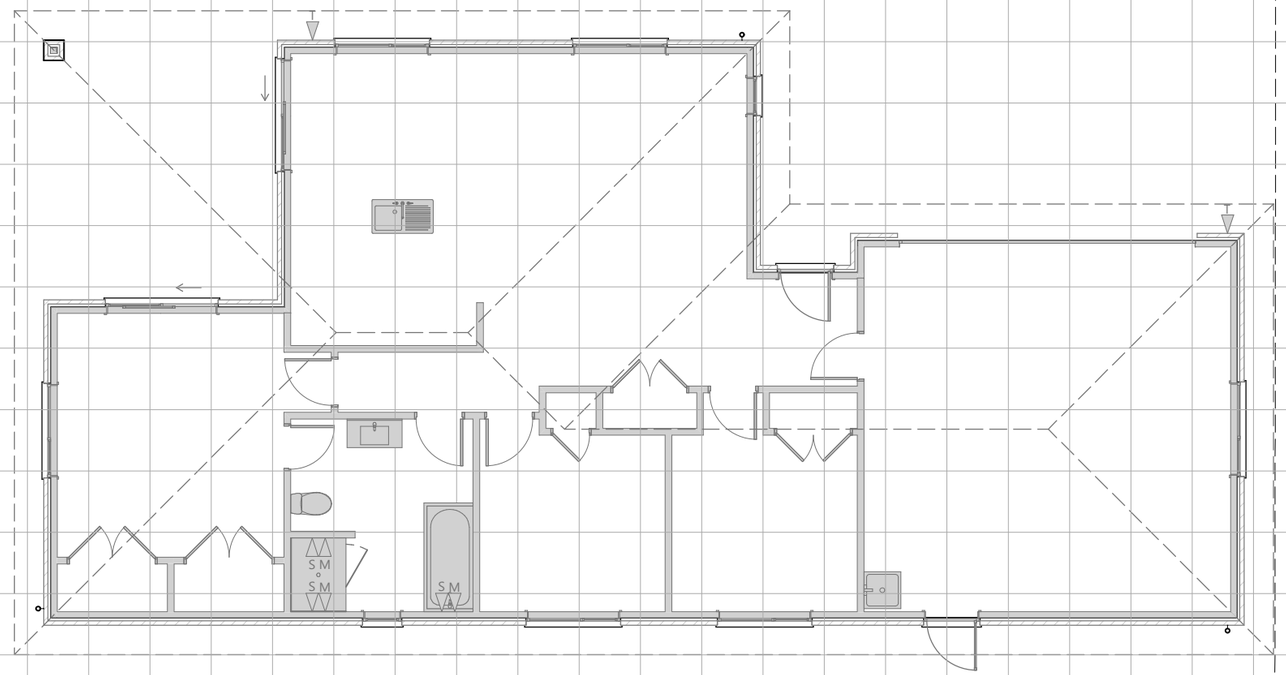

Kaipara District Council
Approved Building Consent Document

BC210203 - Pg 8 of 29

2/07/2021 ComplyNZ

PLAN IS INDICATIVE ONLY - TAKE CARE WHEN COMPLETING SITE WORKS AFTER HAND-OVER. HAND DIGGING IS RECOMMENDED TO CONFIRM DRAIN LOCATIONS PRIOR TO FUTURE WORK

GRIDLINES SET OUT AT 1.0M CENTRES

G.J. Gardner. HOMES

COPYRIGHT - THIS DRAWING REMAINS THE PROPERTY OF G.J. GARDNER HOMES AND IS PROVIDED FOR THE USE DESCRIBED AND MAY NOT BE USED OR REPRODUCED IN WHOLE OR IN PART WITHOUT PERMISSION

SUDFELT CONSTRUCTION LTD
WHANGAREI / KAIPARA
FRANCHISEE FOR
G.J.GARDNER HOMES
14 PERCY STREET,
KENSINGTON
P (09) 437 5666
www.gjgardner.co.nz

ALL CONSTRUCTION TO COMPLY WITH THE LOCAL AUTHORITY REQUIREMENTS, NZ BUILDING CODE/APPROVED DOCUMENTS, AND MEANS OF COMPLIANCE, INCL. NZS3604:2011

ALL DIMENSION AND LEVELS ARE TO BE CHECKED BY CONTRACTOR PRIOR TO COMMENCEMENT OF WORK. CONTRACTOR TO REPORT ANY DISCREPANCY.

DO NOT SCALE OFF PLANS

NEW DWELLING FOR
EDGE & RANDELL
LOT 8 SAMPSONS WAY
DARGAVILLE
KAIPARA

CONSENT

LEGAL DESCRIPTION
LOT NUMBER: **8**
DP NUMBER: **542244**

SITE INFORMATION
SITE AREA: **619m²**
CORROSION: **C**
DISTRICT PLAN ZONE: **RESIDENTIAL**
WIND ZONE: **HIGH**

PLUMBING & DRAINAGE AS-BUILT

JOB No: **390076**
SHEET SIZE: **A3**
SCALE: **1:100**
DRAWN: **C. LIENERT**
PUBLISHED: **30/03/2021**
SHEET: 7
CHECKED: MS

GENERAL NOTES:
- 2440mm STUD HEIGHT
- 2410mm STUD HEIGHT INTERNAL
(INTERNAL STUD HEIGHT LOWER TO ALLOW FOR CPC80 WALL DROP CONNECTION. LOAD BEARING WALLS TO BE PACKED WHERE REQUIRED)
-EXTERIOR WINDOW AND DOOR TRIM HEAD HEIGHT 2100mm FROM FFL
- ALL WINDOW AND EXTERIOR DOOR DIMENSIONS ARE GIVEN AS TRIM SIZES
- FULL LENGTH WINDOW AND DOOR UNITS TO EXCLUDE TIMBER SILL SECTIONS
- ALL EXTERIOR WINDOWS AND DOOR GLASS ARE TO BE DOUBLE GLAZED TO NZS4223
- ALL INTERIOR DOOR PANELS TO BE 1980mm HIGH, OTHER HEIGHTS AS MARKED ON PLAN
- ROOF PITCH IS **25°**
- SOFFIT O/HANG **600mm** FROM FRAME
- GABLE O/HANG **450mm** FROM FRAME
- NOGS FOR BRICK VENEER & LINEA W/B @ **800mm** CRS
- NOGS BEHIND TILED WALLS @ 400mm CRS

FIXINGS:
TO NZS3604:2011

ALL STEEL FIXINGS & FASTENINGS IN COPPER BASED TIMBER PRESERVATIVES (H3.2 OR HIGHER) SHALL BE AS PER NZS3604:2011 SECTION 4 TABLE 4.1, 4.3 & 4.4.4 SHALL BE A MINIMUM OF:

A) TYPE 304 STAINLESS STEEL FOR FIXINGS IN CONTACT WITH TIMBER TREATED WITH COPPER AZOLE, OR ALKALINE COPPER QUATERNARY (ACQ) PRESERVATIVES. WHERE USED IN EXPOSED OR SHELTERED LOCATIONS

B) HOT-DIPPED GALVANISED FOR ALL OTHER LOCATIONS

TOP PLATE FIXINGS:
LUMBERLOK ENGINEERED ALTERNATIVE SOLUTION TO NZS3604:2011

ALL EXTERNAL WALLS AND LOADBEARING INTERNAL WALLS TO HAVE TYPE 'B' LUMBERLOK STUD TO TOP PLATE FIXING.

ALL INTERNAL NON-LOADBEARING WALLS TO HAVE TYPE 'A' LUMBERLOK STUD TO TOP PLATE FIXING

BOTTOM PLATE FIXINGS:
EXTERNAL AND INTERNAL LOAD BEARING WALLS
PROPRIETARY POST FIXED ANCHOR AS PER NZS3604:2011

M12 x 135 BOLT (MIN.) @ 900mm CRS AND WITHIN 150mm OF EACH END OF PLATE AS PER NZS3604:2011 CLAUSE 7.5.12.2 (ADDITIONAL 50mm FOR BOLTS IN NIBS I.E REBATED SHOWERS ON EXTERNAL WALLS OR ENTRY NIB WALLS)

NON-LOAD BEARING WALLS
PROPRIETARY FIXING AS PER NZS3604:2011 TABLE 8.19

RAMSET 8 x 75 DRIVE PIN & WASHER @600mm CRS

REFER TO BRACING INSTALLATION DETAILS FOR BOTTOM PLATE FIXINGS AT LOCATION OF BRACING COMPONENT

TIMBER TREATMENT SCHEDULE
TO NZS3640:2003

KILN DRIED PINUS RADIATA

EXTERNAL WALLS	SG8	H1.2
INTERNAL WALLS	SG8	H1.2
NON-EXPOSED BEAMS & LINTELS	SG8	H1.2
EXPOSED BEAMS	SG8	H3.2
TRUSSES AND SOFFIT FRAMING	SG8	H1.2
WINDOW AND DOOR REVEALS	SG8	H3.1
VALLEY BOARDS		H3.2
TILE BATTENS		H1.2
POSTS		H5
CAVITY BATTENS		H3.1
ALL FRAMES TO HAVE H1.2 BOTTOM PLATE		

Kaipara District Council
Approved Building Consent Document
BC210208 - Pg 9 of 29
2/07/2021 ComplyNZ

HIGH WIND ZONE

EXTERNAL LOAD BEARING STUDS
UP TO 2.4m - 90 x 45 @ 600mm CRS H1.2 SG8

INTERNAL LOAD AND NON-LOAD BEARING STUDS
UP TO 3.0m - 90 x 45 @ 600mm CRS H1.2 SG8

WALL FRAMING KEY
90mm LOAD BEARING WALL
90mm NON-LOAD BEARING WALL

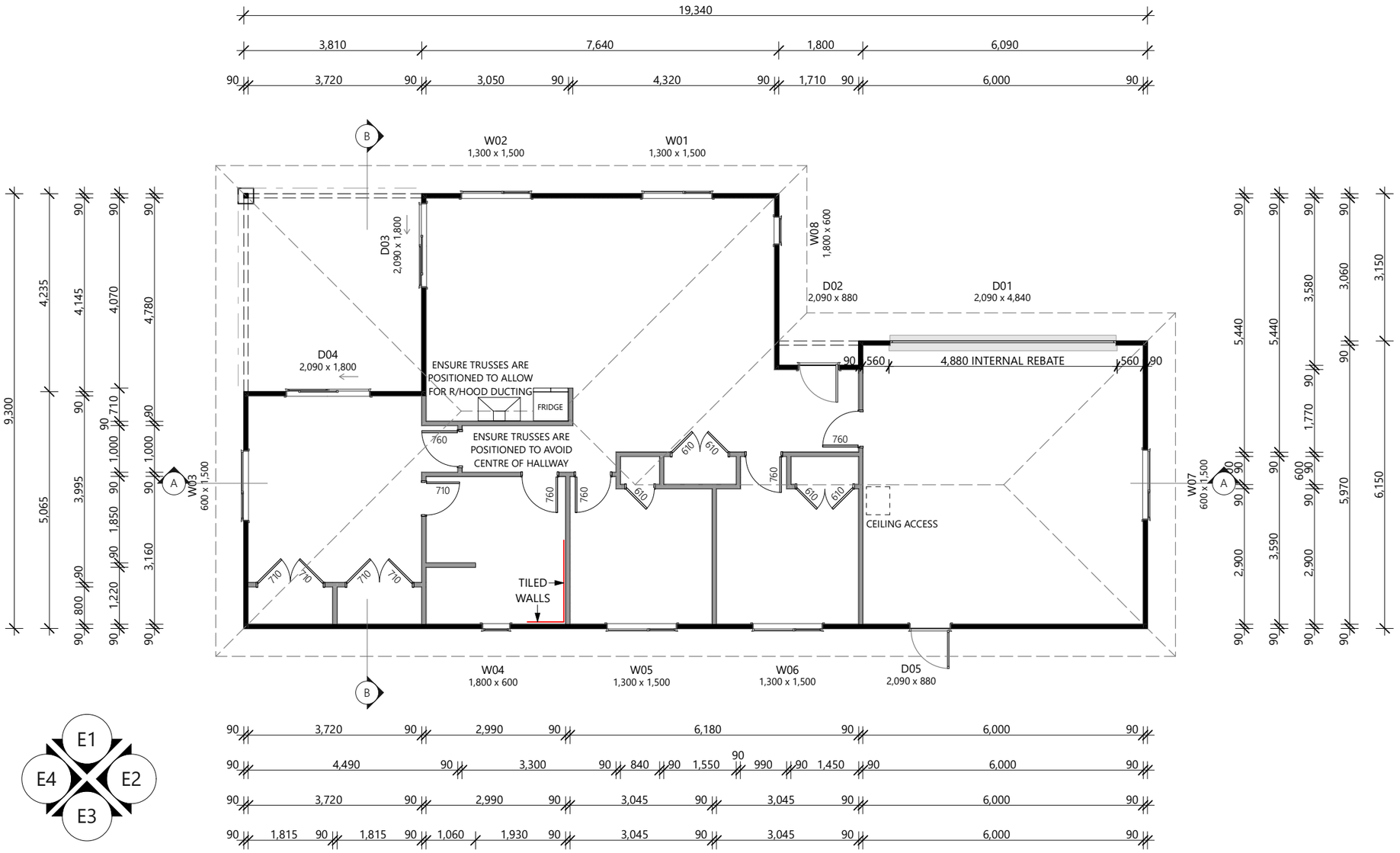

G.J. Gardner. HOMES

COPYRIGHT - THIS DRAWING REMAINS THE PROPERTY OF G.J. GARDNER HOMES AND IS PROVIDED FOR THE USE DESCRIBED AND MAY NOT BE USED OR REPRODUCED IN WHOLE OR IN PART WITHOUT PERMISSION

SUDFELT CONSTRUCTION LTD
WHANGAREI / KAIPARA
FRANCHISEE FOR
G.J.GARDNER HOMES
14 PERCY STREET,
KENSINGTON
P (09) 437 5666
www.gjgardner.co.nz

ALL CONSTRUCTION TO COMPLY WITH THE LOCAL AUTHORITY REQUIREMENTS, NZ BUILDING CODE/APPROVED DOCUMENTS, AND MEANS OF COMPLIANCE, INCL. NZS3604:2011

ALL DIMENSION AND LEVELS ARE TO BE CHECKED BY CONTRACTOR PRIOR TO COMMENCEMENT OF WORK. CONTRACTOR TO REPORT ANY DISCREPANCY.

DO NOT SCALE OFF PLANS

NEW DWELLING FOR
EDGE & RANDELL
LOT 8 SAMPSONS WAY
DARGAVILLE
KAIPARA

CONSENT

LEGAL DESCRIPTION
LOT NUMBER: **8**
DP NUMBER: **542244**

SITE INFORMATION
SITE AREA: **619m²**
CORROSION: **C**
DISTRICT PLAN ZONE: **RESIDENTIAL**
WIND ZONE: **HIGH**

WALL FRAMING PLAN

JOB No: **390076**
SHEET SIZE: **A3**
SCALE: **1:100, 1:105.8381**
DRAWN: **C. LIENERT**
PUBLISHED: **30/03/2021**
SHEET: 8
CHECKED: MS

NOTE:
1. TOP PLATE JOINTS FOR WALLS AT RIGHT ANGLES TO EXTERNAL WALLS ARE AS FOLLOWS:
A) WALLS WITH BRACING ELEMENTS NOT EXCEEDING 125BU REQUIRE A 6kN CAPACITY CONNECTION TO ONE EXTERNAL WALL.
B) WALLS WITH BRACING ELEMENTS NOT EXCEEDING 250BU REQUIRE A 6kN CAPACITY CONNECTION TO TWO EXTERNAL WALLS.
2. TOP PLATE JOINTS FOR ALL WALLS IN LINE THAT HAVE WALL BRACING ELEMENTS EXCEEDING 100BU OR HAVE A CEILING DIAPHRAGM ATTACHED REQUIRE A 6kN CAPACITY CONNECTION AS ABOVE.
3. TOP PLATE JOINTS FOR WALLS AT RIGHT ANGLES AND IN LINE THAT HAVE EITHER NO BRACING ELEMENTS OR ARE ON A SINGLE STORY BUILDING ONLY WITH WALL BRACING DEMANDS NOT EXCEEDING 100BU REQUIRE A 3kN CAPACITY CONNECTION AS ABOVE.

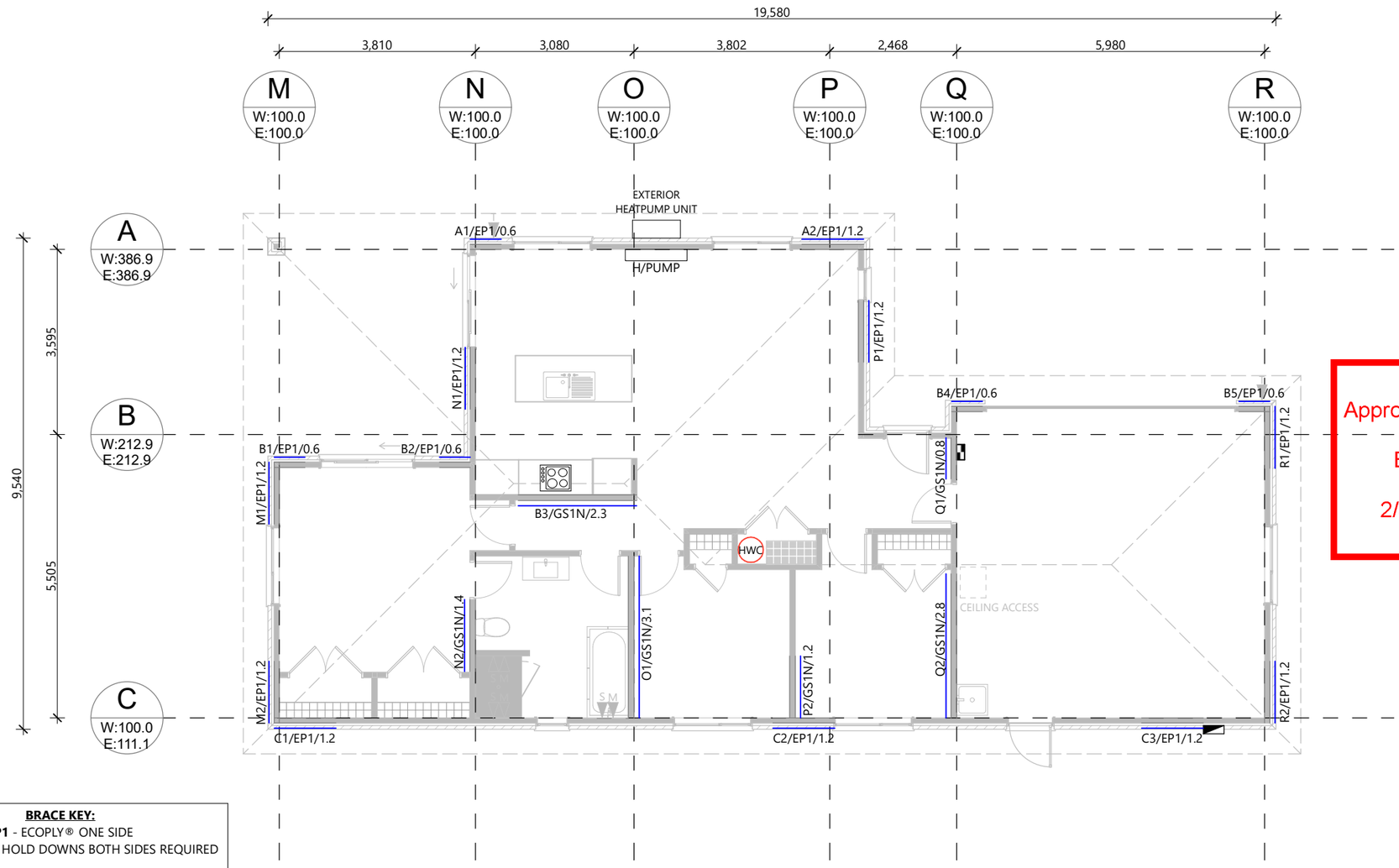

BRACE KEY:
EP1 - ECOPLY® ONE SIDE
- GIB HandiBrac®HOLD DOWNS BOTH SIDES REQUIRED

GS1-N - ANY 10mm OR 13mm GIB® STANDARD PLASTERBOARD TO ONE SIDE ONLY

Kaipara District Council
Approved Building Consent Document
BC210208 - Pg 10 of 29
2/07/2021 ComplyNZ

G.J. Gardner. HOMES
COPYRIGHT - THIS DRAWING REMAINS THE PROPERTY OF G.J. GARDNER HOMES AND IS PROVIDED FOR THE USE DESCRIBED AND MAY NOT BE USED OR REPRODUCED IN WHOLE OR IN PART WITHOUT PERMISSION

SUDFELT CONSTRUCTION LTD
WHANGAREI / KAIPARA
FRANCHISEE FOR
G.J.GARDNER HOMES
14 PERCY STREET,
KENSINGTON
P (09) 437 5666
www.gjgardner.co.nz

ALL CONSTRUCTION TO COMPLY WITH THE LOCAL AUTHORITY REQUIREMENTS, NZ BUILDING CODE/APPROVED DOCUMENTS, AND MEANS OF COMPLIANCE, INCL. NZS3604:2011

ALL DIMENSION AND LEVELS ARE TO BE CHECKED BY CONTRACTOR PRIOR TO COMMENCEMENT OF WORK. CONTRACTOR TO REPORT ANY DISCREPANCY.

DO NOT SCALE OFF PLANS

NEW DWELLING FOR
EDGE & RANDELL
LOT 8 SAMPSONS WAY
DARGAVILLE
KAIPARA

CONSENT

LEGAL DESCRIPTION
LOT NUMBER: **8**
DP NUMBER: **542244**

SITE INFORMATION
SITE AREA: **619m²**
CORROSION: **C**
DISTRICT PLAN ZONE: **RESIDENTIAL**
WIND ZONE: **HIGH**

BRACING PLAN

JOB No: **390076**
SHEET SIZE: **A3**
SCALE: **1:100**
DRAWN: **C. LIENERT**
PUBLISHED: **30/03/2021**
SHEET: 9
CHECKED: MS

GIB EzyBrace® Bracing Software

Demand Calculation Sheet

Job Details

Name:	EDGE & RANDELL
Street and Number:	Lot 8, Sampsons Way
Lot and DP Number:	Lot 8 DP 542244
City/Town/District:	DARGAVILLE - KAIPARA
Designer:	G.J. GARDNER HOMES
Company:	G.J. GARDNER HOMES
Date:	MARCH 2021

Building Specification

Number of Storeys	1
Floor Loading	2 kPa
Foundation Type	Slab
	Single
Cladding Weight	Heavy
Roof Weight	Light
Room in Roof Space	No
Roof Pitch (degrees)	25
Roof Height above Eaves (m)	2.74
Building Height to Apex (m)	5.06
Ground to Lower Floor (m)	0.30
Average Stud Height (m)	2.4
Building Length (m)	19.58
Building Width (m)	9.54
Building Plan Area (m²)	145.0

Kaipara District Council
Approved Building Consent Document

BC210208 - Pg 11 of 29

2/07/2021 ComplyNZ

Building Location

Wind Zone = High

Earthquake Zone 1
Soil Type D & E (Deep to Very Soft)
Annual Prob. of Exceedance: 1 in 500 (Default)

Bracing Units required for Wind

	Along	Across
Single Level	**507**	**1098**

Bracing Units required for Earthquake

	Along & Across
Single Level	**567**

GIB EzyBrace® Version 1/17

Single Level Along Resistance Sheet

Job Name: EDGE & RANDELL

									Wind	EQ
									Demand	
									507	567
									Achieved	
Line	Element	Length (m)	Angle (degrees)	Stud Ht. (m)	Type	Supplier	Wind (BUs)	EQ (BUs)	1020 201%	1101 194%
A	1	0.60		2.4	EP1-0.6	EcoPly	57	63		
	2	1.20		2.4	EP1-1.2	EcoPly	144	162		
	External Length = 7.88								201 OK	225 OK
B	1	0.60		2.4	EP1-0.6	EcoPly	57	63		
	2	0.60		2.4	EP1-0.6	EcoPly	57	63		
	3	2.30		2.4	GS1-N	GIB®	159	138		
	4	0.60		2.4	EP1-0.6	EcoPly	57	63		
	5	0.60		2.4	EP1-0.6	EcoPly	57	63		
	External Length = 11.70								387 OK	390 OK
C	1	1.20		2.4	EP1-1.2	EcoPly	144	162		
	2	1.20		2.4	EP1-1.2	EcoPly	144	162		
	3	1.20		2.4	EP1-1.2	EcoPly	144	162		
	External Length = 19.58								432 OK	486 OK

Single Level Across Resistance Sheet

Job Name: EDGE & RANDELL

									Wind	EQ
									Demand	
									1098	567
									Achieved	
Line	Element	Length (m)	Angle (degrees)	Stud Ht. (m)	Type	Supplier	Wind (BUs)	EQ (BUs)	1499 137%	1529 270%
M	1	1.20		2.4	EP1-1.2	EcoPly	144	162		
	2	1.20		2.4	EP1-1.2	EcoPly	144	162		
	External Length = 5.30								288 OK	324 OK
N	1	1.20		2.4	EP1-1.2	EcoPly	144	162		
	2	1.40		2.4	GS1-N	GIB®	97	84		
	External Length = 4.23								241 OK	246 OK
O	1	3.10		2.4	GS1-N	GIB®	214	186		
									214 OK	186 OK
P	1	1.20		2.4	EP1-1.2	EcoPly	144	162		
	2	1.20		2.4	GS1-N	GIB®	83	72		
	External Length = 3.67								227 OK	234 OK
Q	1	0.80		2.4	GS1-N	GIB®	49	47		
	2	2.80		2.4	GS1-N	GIB®	193	168		
	External Length = 0.52								242 OK	215 OK
R	1	1.20		2.4	EP1-1.2	EcoPly	144	162		
	2	1.20		2.4	EP1-1.2	EcoPly	144	162		
	External Length = 6.39								288 OK	324 OK

G.J. Gardner. HOMES

COPYRIGHT - THIS DRAWING REMAINS THE PROPERTY OF G.J. GARDNER HOMES AND IS PROVIDED FOR THE USE DESCRIBED AND MAY NOT BE USED OR REPRODUCED IN WHOLE OR IN PART WITHOUT PERMISSION

SUDFELT CONSTRUCTION LTD
WHANGAREI / KAIPARA
FRANCHISEE FOR
G.J.GARDNER HOMES
14 PERCY STREET,
KENSINGTON
P (09) 437 5666
www.gjgardner.co.nz

ALL CONSTRUCTION TO COMPLY WITH THE LOCAL AUTHORITY REQUIREMENTS, NZ BUILDING CODE/APPROVED DOCUMENTS, AND MEANS OF COMPLIANCE, INCL. NZS3604:2011

ALL DIMENSION AND LEVELS ARE TO BE CHECKED BY CONTRACTOR PRIOR TO COMMENCEMENT OF WORK. CONTRACTOR TO REPORT ANY DISCREPANCY.

DO NOT SCALE OFF PLANS

NEW DWELLING FOR
EDGE & RANDELL
LOT 8 SAMPSONS WAY
DARGAVILLE
KAIPARA

CONSENT

LEGAL DESCRIPTION
LOT NUMBER: **8**
DP NUMBER: **542244**

SITE INFORMATION
SITE AREA: **619m²**
CORROSION: **C**
DISTRICT PLAN ZONE: **RESIDENTIAL**
WIND ZONE: **HIGH**

BRACING CALCULATIONS

JOB No:	**390076**
SHEET SIZE:	**A3**
SCALE:	**1:1.1754, 1:1**
DRAWN:	**C. LIENERT**
PUBLISHED:	**30/03/2021**

SHEET: 10

CHECKED: MS

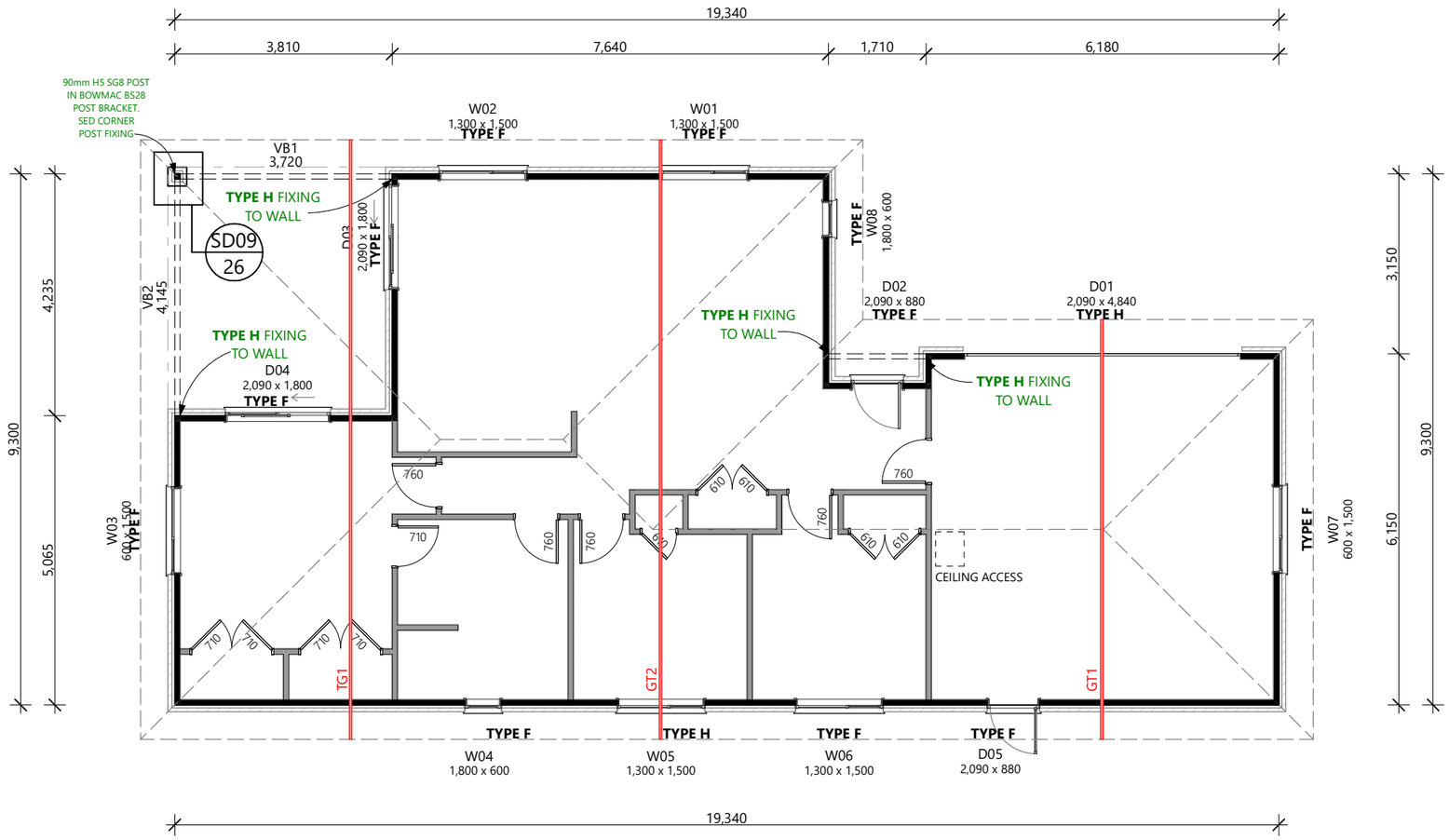

LINTEL & BEAM TYPICAL NOTES:

LINTEL FIXING NOT PREVENTING UPLIFT FIXING
(NZS3604:2011 TABLE 8.19 LINTEL TO TRIMMING STUD)

2/100 x 3.75 HAND DRIVEN END NAILS
OR
3/90 x 3.15 POWER DRIVEN END NAILS

LINTEL FIXINGS PREVENTING UPLIFT
LINTEL FIXINGS SELECTED BY LUMBERLOK FIXING MANUAL

TRIMMING STUDS
A TRIMMING STUD SHALL BE PROVIDED TO EACH SIDE OF ANY OPENING AS FOLLOWS;
- MUST BE THE SAME WIDTH AS THE STUDS IN THE WALL
- WHETHER SINGLE OR DOUBLE, SHALL NOT CONTAIN HOLES, NOTCHES, CHECKS OR CUTS IN THE MIDDLE THIRD OF THEIR LENGTH
- WHERE A DOUBLING STUD WHICH PROVIDES SUPPORT FOR A LINTEL IS SHORTER BY 400mm OR MORE THAN THE FULL STUD HEIGHT, IT'S THICKNESS SHALL NOT BE INCLUDED AS CONTRIBUTING TO THE THICKNESS OF TRIMMING STUDS FROM TABLE 8.5 OF NZS3604:2011

BEAMS/LINTELS OUTSIDE NZS3604
BEAMS AND LINTELS OUTSIDE NZS3604:2011 HAVE BEEN CALCULATED UTILISING ENGINEERED CHH DESIGN IT COMPUTER PROGRAM AS PER **JOB 334171C1**

GIRDER TRUSSES - GT#
GIRDER TRUSSES LOCATED AS PER **CARTERS** TRUSS DESIGN AS PER **334171C1**

Kaipara District Council
Approved Building Consent Document

BC210208 - Pg 12 of 29

2/07/2021 ComplyNZ

LINTEL & FIXING

ID	WIDTH	TABLE	SIZE	UPLIFT FIXING
D01	4840	designIT	FB30M	TYPE H
D02	880	designIT	150 Hy90	TYPE F
D03	1800	designIT	150 Hy90	TYPE F
D04	1800	designIT	150 Hy90	TYPE H
D05	880	designIT	150 Hy90	TYPE F
W01	1500	designIT	150 Hy90	TYPE F
W02	1500	designIT	200 Hy90	TYPE F
W03	1500	designIT	150 Hy90	TYPE F
W04	1500	designIT	200 Hy90	TYPE F
W05	1500	designIT	200 Hy90	TYPE H
W06	1500	designIT	150 Hy90	TYPE F
W07	1500	designIT	150 Hy90	TYPE F
VB1	3720	designIT	300 Hy90	TYPE H
VB2	4145	designIT	300 Hy90	TYPE H

COPYRIGHT - THIS DRAWING REMAINS THE PROPERTY OF G.J. GARDNER HOMES AND IS PROVIDED FOR THE USE DESCRIBED AND MAY NOT BE USED OR REPRODUCED IN WHOLE OR IN PART WITHOUT PERMISSION

G.J. Gardner. HOMES

SUDFELT CONSTRUCTION LTD
WHANGAREI / KAIPARA
FRANCHISEE FOR
G.J.GARDNER HOMES
14 PERCY STREET,
KENSINGTON
P (09) 437 5666
www.gjgardner.co.nz

ALL CONSTRUCTION TO COMPLY WITH THE LOCAL AUTHORITY REQUIREMENTS, NZ BUILDING CODE/APPROVED DOCUMENTS, AND MEANS OF COMPLIANCE, INCL. NZS3604:2011

ALL DIMENSION AND LEVELS ARE TO BE CHECKED BY CONTRACTOR PRIOR TO COMMENCEMENT OF WORK. CONTRACTOR TO REPORT ANY DISCREPANCY.

DO NOT SCALE OFF PLANS

NEW DWELLING FOR
EDGE & RANDELL
LOT 8 SAMPSONS WAY
DARGAVILLE
KAIPARA

CONSENT

LEGAL DESCRIPTION
LOT NUMBER: **8**
DP NUMBER: **542244**

SITE INFORMATION
SITE AREA: **619m²**
CORROSION: **C**
DISTRICT PLAN ZONE: **RESIDENTIAL**
WIND ZONE: **HIGH**

LINTEL & BEAM PLAN

JOB No: **390076**
SHEET SIZE: **A3**
SCALE: **1:100**
DRAWN: **C. LIENERT**
PUBLISHED: **30/03/2021**
SHEET: 11
CHECKED: MS

Buildable Truss Layout

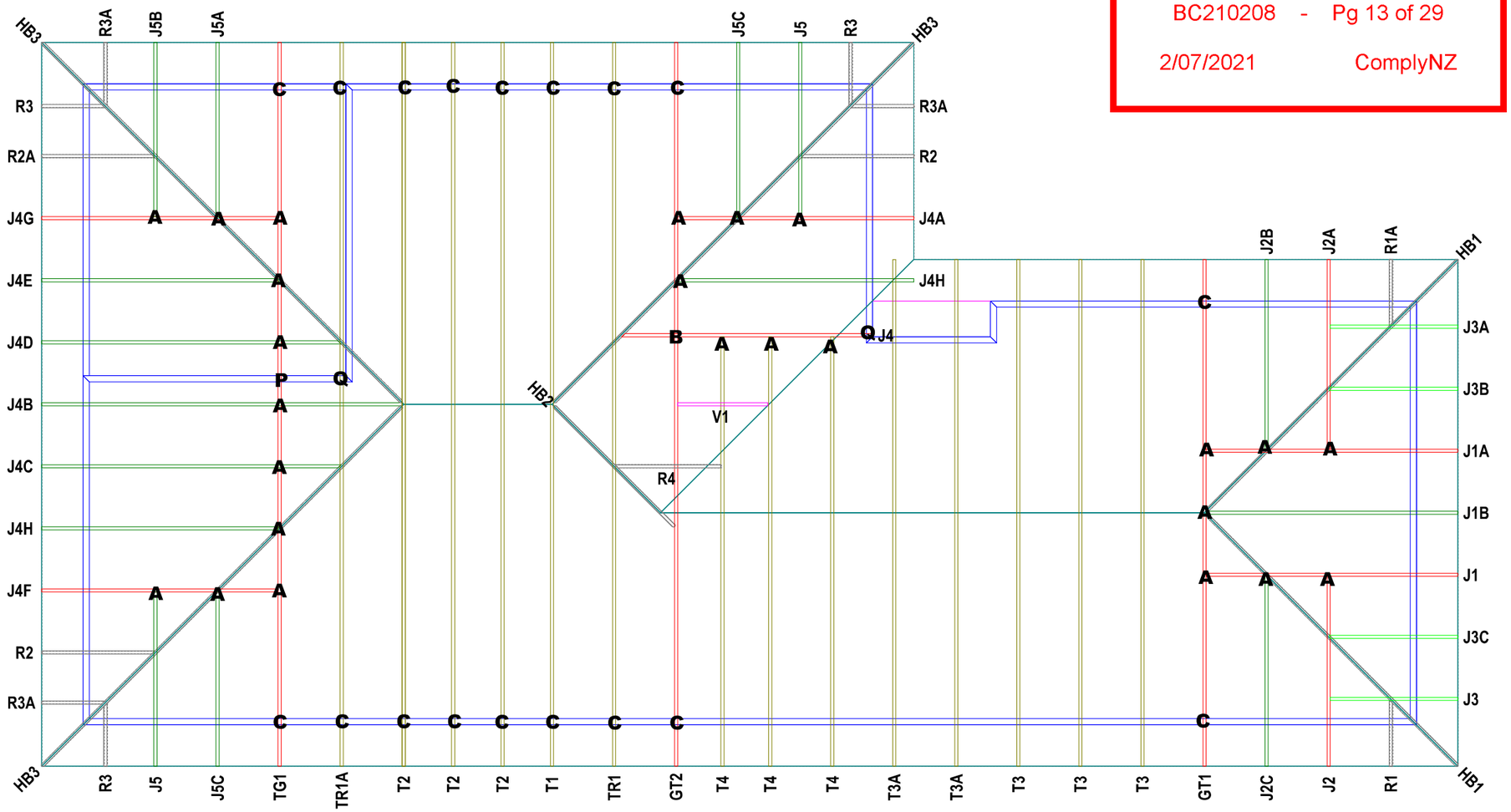

Kaipara District Council
Approved Building Consent Document

BC210208 - Pg 13 of 29

2/07/2021 ComplyNZ

W=Wire dogs for top chord to top chord connections

CARTERS

32 Commerce St
Whangarei
Ph (09) 430 7716
Fax (09) 430 7720

JOB No 334171C1

Client:	GJ Gardner (Sudfelt Const)
Job Name:	Edge
Address:	Lot 8 Sampsons Way
Pitch:	25.0deg
Roof Material:	Metal Tiles
Soffit Overhang:	600
Wind Area:	High
Ceiling:	Gib 13mm/Rondo Screwed
B/chord restraints:	600
Drawn by:	Administrator
Date :	30 Dec,2020

Trusses And Rafters At 900 Centres Unless Stated Otherwise.
This layout is to be read in conjunction with the Architectural plans.

PAGE 1 of 2

FIXINGS

Truss Fixing read inconjuction with truss hardware site pack supplied with trusses for fixing

A=47x90 JH
B=47x120 JH
C=CT200
D=47x190 JH
E=95x165 JH
S=Strut brace
G=SH-140 Split Hanger
H=SH-180 Split Hanger
K=SH-220 Split Hanger
L=6kn Strap
M=Multigrip
N=Nail On Plate
J=CPC 80
T=CPC 40 Short {Pair}
Q=9kn Pack
P=16kn
X=24kn uplift

All other truss fixings not indicated as above must have two wire dogs

NOTE

Please contact your local CARTERS Manufacturing Branch for any queries regarding this layout or if any on site remedial work is required.

No modifications to Roof Trusses or Wall Frames are to be undertaken without first obtaining written authority from CARTERS Manufacturing.

See Page 2 for Dimensions, Lintel Statement

G.J. Gardner. HOMES

COPYRIGHT - THIS DRAWING REMAINS THE PROPERTY OF G.J. GARDNER HOMES AND IS PROVIDED FOR THE USE DESCRIBED AND MAY NOT BE USED OR REPRODUCED IN WHOLE OR IN PART WITHOUT PERMISSION

SUDFELT CONSTRUCTION LTD
WHANGAREI / KAIPARA
FRANCHISEE FOR
G.J.GARDNER HOMES
14 PERCY STREET,
KENSINGTON
P (09) 437 5666
www.gjgardner.co.nz

ALL CONSTRUCTION TO COMPLY WITH THE LOCAL AUTHORITY REQUIREMENTS, NZ BUILDING CODE/APPROVED DOCUMENTS, AND MEANS OF COMPLIANCE, INCL. NZS3604:2011

ALL DIMENSION AND LEVELS ARE TO BE CHECKED BY CONTRACTOR PRIOR TO COMMENCEMENT OF WORK. CONTRACTOR TO REPORT ANY DISCREPANCY.

DO NOT SCALE OFF PLANS

NEW DWELLING FOR
EDGE & RANDELL
LOT 8 SAMPSONS WAY
DARGAVILLE
KAIPARA

CONSENT

LEGAL DESCRIPTION
LOT NUMBER: **8**
DP NUMBER: **542244**

SITE INFORMATION
SITE AREA: **619m²**
CORROSION: **C**
DISTRICT PLAN ZONE: **RESIDENTIAL**
WIND ZONE: **HIGH**

TRUSS DESIGN

JOB No:	**390076**
SHEET SIZE:	**A3**
SCALE:	**1:1.1196**
DRAWN:	**C. LIENERT**
PUBLISHED:	**30/03/2021**

SHEET: 12

CHECKED: MS

Kaipara District Council
Approved Building Consent Document

BC210208 - Pg 14 of 29

2/07/2021 ComplyNZ

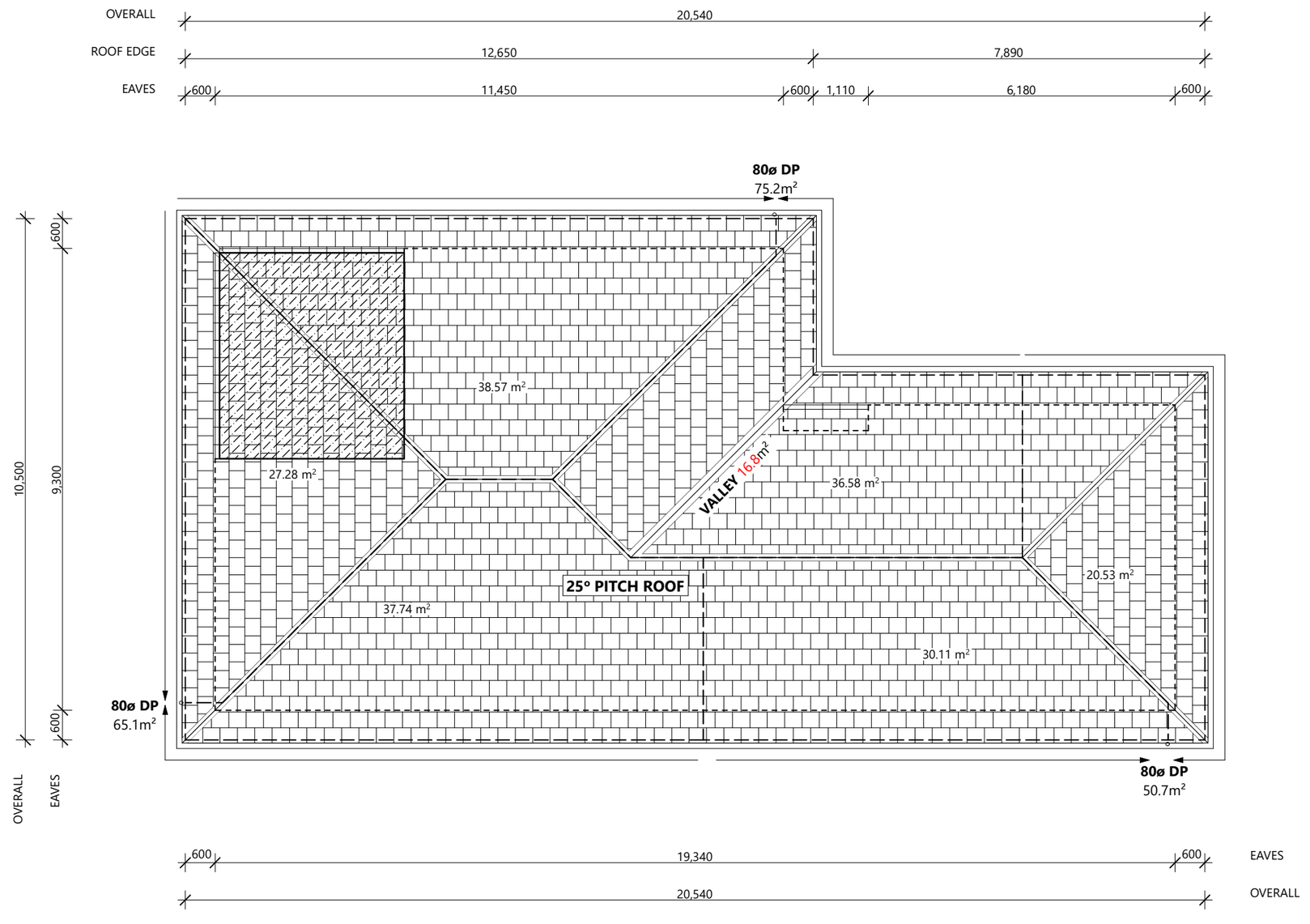

LIGHT ROOF - METAL TILE
ROOF BRACING - ONE PER 50m² REQUIRED
190.8m² ROOF AREA / 50m²
= **4** ROOF BRACES REQUIRED.

7 HIPS AND VALLEYS - 3
4 HIPS & VALLEYS
ROOF BRACING ACHIEVED

RAINFALL INTENSITY FOR

LOT 8 SAMPSONS WAY
DARGAVILLE KAIPARA - NIWA V4

107 + 15 = 122mm/h

6300mm² FOR 100mm/h RAINFALL INTENSITY

5200mm² ALLOWED CONTINUOUS QUARTER ROUND SPOUTING FOR 120mm/h RAINFALL INTENSITY

42m² MAX. ROOF AREA

NOTES:
REFER TO SPECIFICATIONS FOR DOWNPIPE AND SPOUTING SUPPORTING DOCUMENTS TO DEMONSTRATE COMPLIANCE WITH E1 OF THE BUILDING CODE IN ACCORDANCE WITH THE ACCEPTABLE SOLUTION E1/AS1

READ IN CONJUNCTION WITH FINAL PS1 & PRE-CUT DESIGN & DOCUMENTS. TRUSS MANUFACTURER TO INFORM DESIGNER OF ANY FURTHER SLAB THICKENING THAT ARE REQUIRED TO SUPPORT ROOF LOADS PRIOR TO LODGEMENT OF BC.

ENSURE THAT ALL DOWNPIPES ARE POSITIONED WELL CLEAR OF JOINERY UNITS

RAISED SOFFIT

AREA OF RAISED SOFFIT IN ALFRESCO AREA SHOWN. CEILING BATTENS 70 x 35 @600mm CRS H1.2 SG8 DIRECTLY FIXED TO BOTTOM OF TRUSSED AREA WITH 4.5mm FIBRE CEMENT SHEET LINING

G.J. Gardner. HOMES

COPYRIGHT - THIS DRAWING REMAINS THE PROPERTY OF G.J. GARDNER HOMES AND IS PROVIDED FOR THE USE DESCRIBED AND MAY NOT BE USED OR REPRODUCED IN WHOLE OR IN PART WITHOUT PERMISSION

SUDFELT CONSTRUCTION LTD
WHANGAREI / KAIPARA
FRANCHISEE FOR
G.J.GARDNER HOMES
14 PERCY STREET,
KENSINGTON
P (09) 437 5666
www.gjgardner.co.nz

ALL CONSTRUCTION TO COMPLY WITH THE LOCAL AUTHORITY REQUIREMENTS, NZ BUILDING CODE/APPROVED DOCUMENTS, AND MEANS OF COMPLIANCE, INCL. NZS3604:2011

ALL DIMENSION AND LEVELS ARE TO BE CHECKED BY CONTRACTOR PRIOR TO COMMENCEMENT OF WORK. CONTRACTOR TO REPORT ANY DISCREPANCY.

DO NOT SCALE OFF PLANS

NEW DWELLING FOR
EDGE & RANDELL
LOT 8 SAMPSONS WAY
DARGAVILLE
KAIPARA

CONSENT

LEGAL DESCRIPTION
LOT NUMBER: **8**
DP NUMBER: **542244**

SITE INFORMATION
SITE AREA: **619m²**
CORROSION: **C**
DISTRICT PLAN ZONE: **RESIDENTIAL**
WIND ZONE: **HIGH**

ROOF PLAN

JOB No: **390076**
SHEET SIZE: **A3**
SCALE: **1:100, 1:10**
DRAWN: **C. LIENERT**
PUBLISHED: **30/03/2021**
SHEET: 13
CHECKED: MS

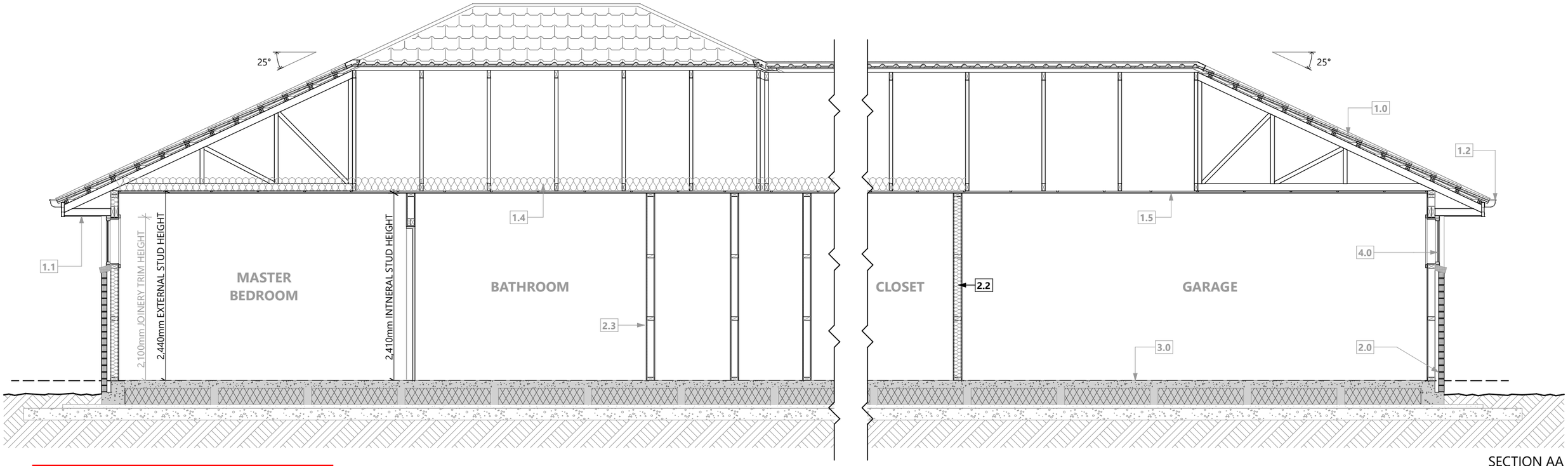

SECTION AA

Kaipara District Council
Approved Building Consent Document

BC210208 - Pg 15 of 29

2/07/2021 ComplyNZ

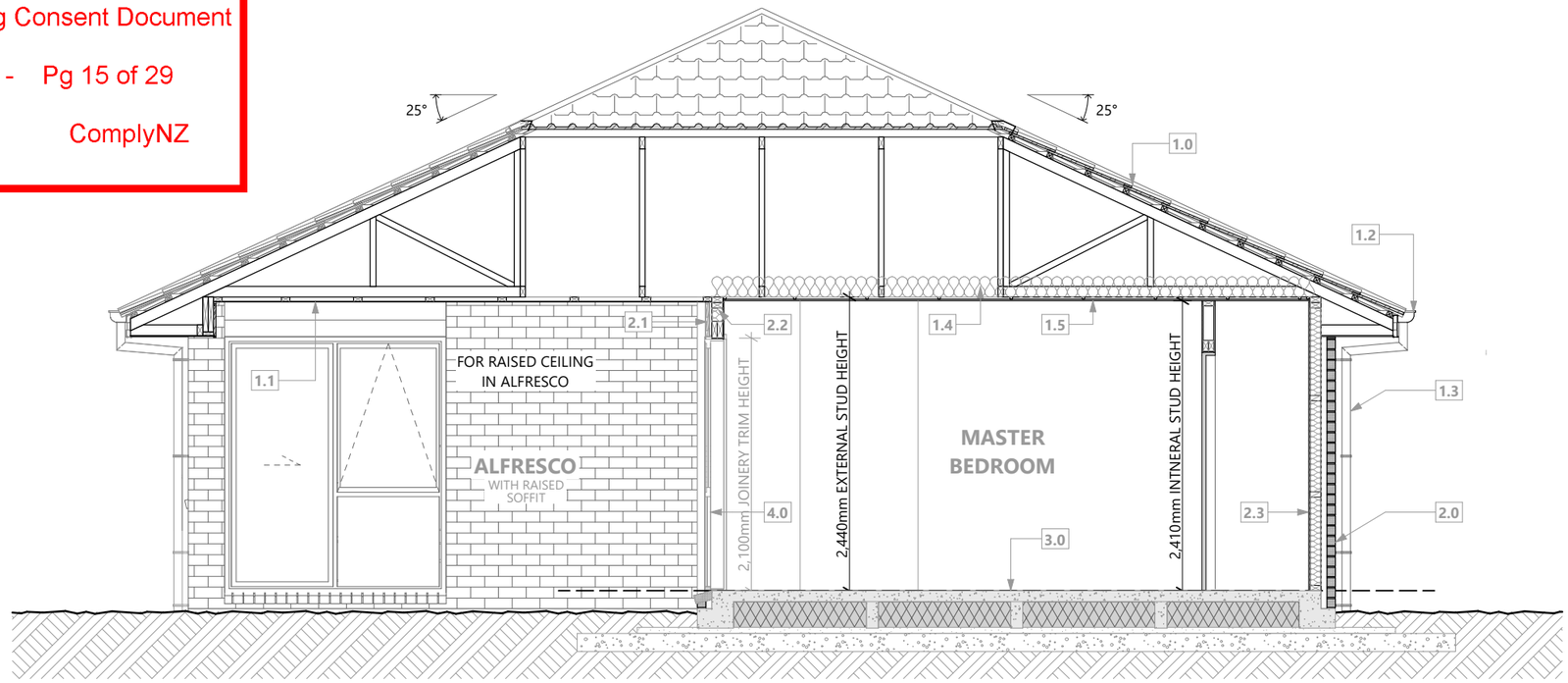

SECTION BB

SECTION NOTES:

1.0 GERARD PRESSED METAL TILE ROOF OVER BATTENS OVER SELECTED ROOFING UNDERLAY. REFER TO ROOF FRAMING PLAN FOR TILE BATTEN FIXING

1.1 SELECTED FIBRE CEMENT 4.5mm SOFFIT LINING

1.2 CONTINUOUS SPOUTING QUARTER ROUND GUTTER ON COLORSTEEL FASCIA

1.3 80mmø ROUND uPVC DOWNPIPES

1.4 R2.2 PINK BATTS IN CEILING OF THERMAL ENVELOPE. REFER TO FLOOR PLAN FOR LOCATION OF THERMAL ENVELOPE.
REFER TO H1 CALCULATIONS FOR ACHIEVED CONSTRUCTION R-VALUE AND GENERAL COMPLIANCE DETAILS

1.5 RONDO NZ31 DIRECT FIXED CEILING BATTENS AT 600mm CRS WITH 13mm SELECTED GIB LINING

2.0 SELECTED 70 SERIES BRICK VENEER OVER A 50mm DRAINED CAVITY OVER SELECTED BREATHER TYPE BUILDING PAPER. BRICK VENEER SELECTED FROM BUILDERS RANGE

2.1 SELECTED FIBRE CEMENT BEVELBACK WEATHERBOARD ON A 20mm CAVITY OVER SELECTED BREATHER TYPE BUILDING PAPER.

2.2 R3.2 PINK BATTS IN WALLS OF THERMAL ENVELOPE
-IN EXTERNAL WALLS - EXCLUDING GARAGE
-IN INTERNAL WALLS BETWEEN HABITABLE SPACE AND GARAGE
REFER TO H1 CALCULATIONS FOR ACHIEVED CONSTRUCTION R-VALUE AND GENERAL COMPLIANCE DETAILS

2.3 10mm SELECTED GIB WALL LINING. AQUALINE TO 'WET AREAS' AND SELECTED BRACING ELEMENTS AS PER BRACING PLAN. 10mm STANDARD GIB ELSEWHERE.

3.0 FIRTH RIBRAFT SLAB - REFER TO FOUNDATION PLAN FOR DETAILS. R1.3 CONSTRUCTION R-VALUE ACHIEVED

4.0 SELECTED POWDERCOATED ALUMINIUM JOINERY, ALL GLASS WINDOWS AND DOORS ARE TO BE DOUBLE GLAZED. ALL GLASS TO MEET NZS4223 SAFETY GLAZING.

G.J. Gardner. HOMES

COPYRIGHT - THIS DRAWING REMAINS THE PROPERTY OF G.J. GARDNER HOMES AND IS PROVIDED FOR THE USE DESCRIBED AND MAY NOT BE USED OR REPRODUCED IN WHOLE OR IN PART WITHOUT PERMISSION

SUDFELT CONSTRUCTION LTD
WHANGAREI / KAIPARA
FRANCHISEE FOR
G.J.GARDNER HOMES
14 PERCY STREET,
KENSINGTON
P (09) 437 5666
www.gjgardner.co.nz

ALL CONSTRUCTION TO COMPLY WITH THE LOCAL AUTHORITY REQUIREMENTS, NZ BUILDING CODE/APPROVED DOCUMENTS, AND MEANS OF COMPLIANCE, INCL. NZS3604:2011

ALL DIMENSION AND LEVELS ARE TO BE CHECKED BY CONTRACTOR PRIOR TO COMMENCEMENT OF WORK. CONTRACTOR TO REPORT ANY DISCREPANCY.

DO NOT SCALE OFF PLANS

NEW DWELLING FOR
EDGE & RANDELL
LOT 8 SAMPSONS WAY
DARGAVILLE
KAIPARA

CONSENT

LEGAL DESCRIPTION
LOT NUMBER: **8**
DP NUMBER: **542244**

SITE INFORMATION
SITE AREA: **619m²**
CORROSION: **C**
DISTRICT PLAN ZONE: **RESIDENTIAL**
WIND ZONE: **HIGH**

SECTIONS

JOB No: **390076**
SHEET SIZE: **A3**
SCALE: **1:50, 1:126.1886**
DRAWN: **C. LIENERT**
PUBLISHED: **30/03/2021**
SHEET: 14
CHECKED: MS

Kaipara District Council
Approved Building Consent Document

BC210208 - Pg 16 of 29

2/07/2021 ComplyNZ

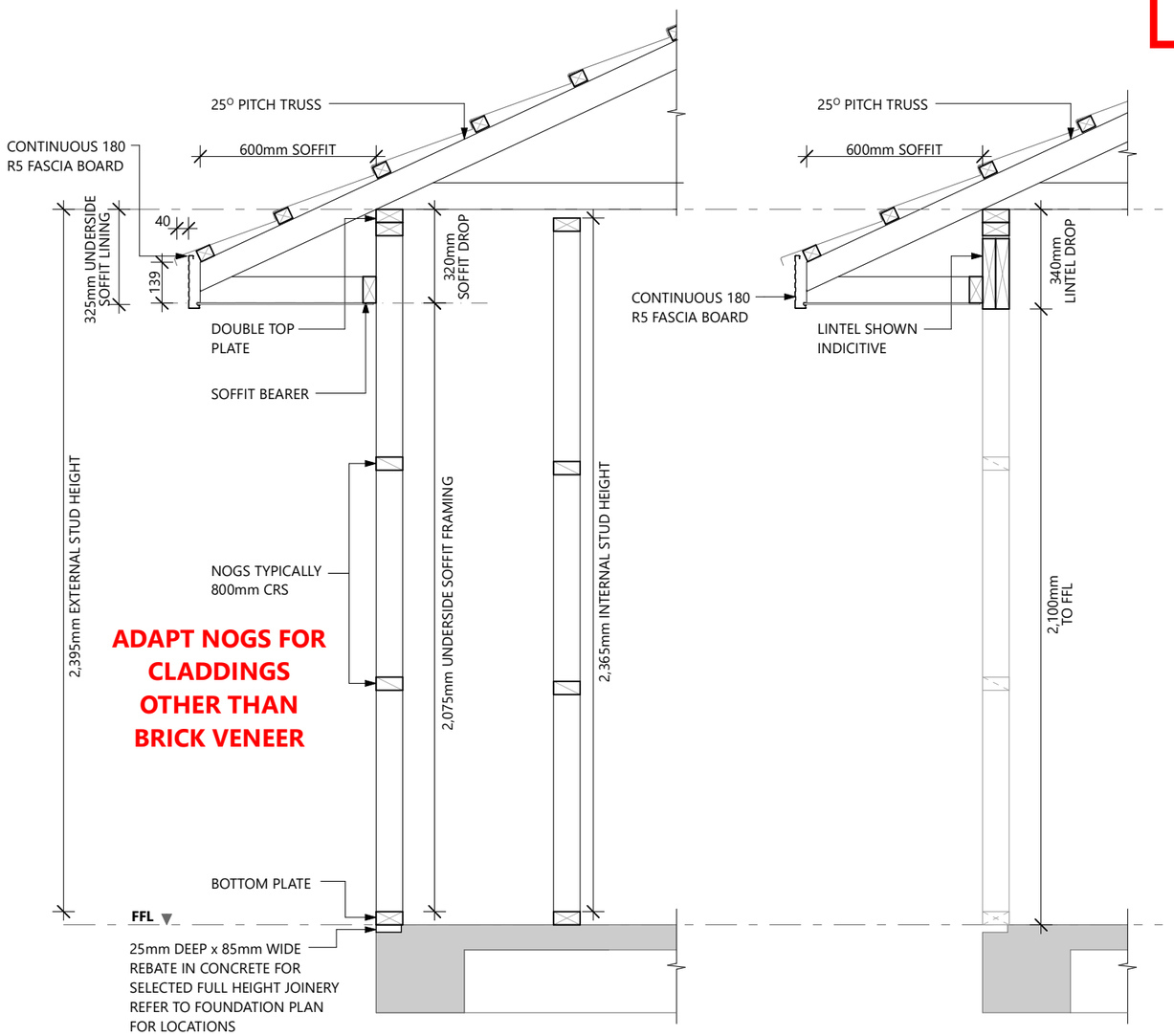

WALL FRAMING SETOUT FOR FRAME & TRUSS
1:20

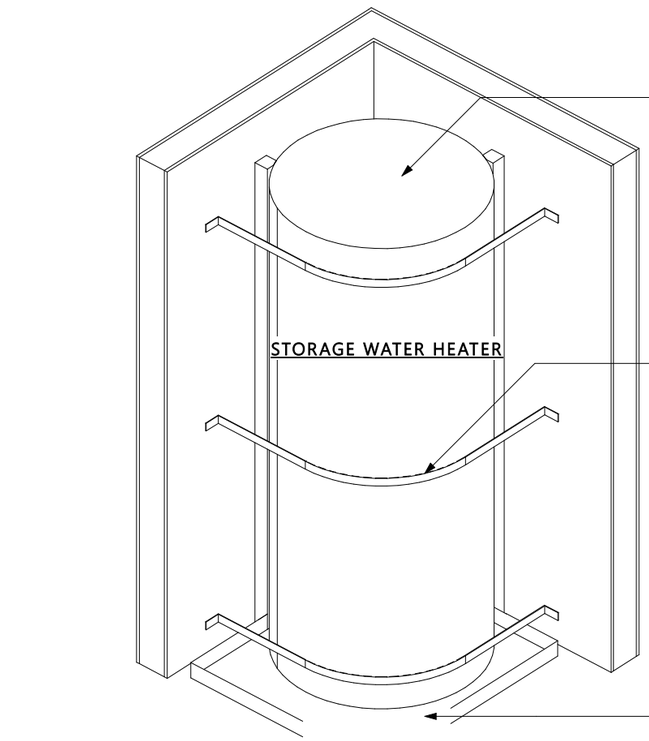

ID08
-

HOT WATER CYLINDER SEISMIC RESTRAINT DETAIL
1:20

G.J. Gardner. HOMES

COPYRIGHT - THIS DRAWING REMAINS THE PROPERTY OF G.J. GARDNER HOMES AND IS PROVIDED FOR THE USE DESCRIBED AND MAY NOT BE USED OR REPRODUCED IN WHOLE OR IN PART WITHOUT PERMISSION

SUDFELT CONSTRUCTION LTD
WHANGAREI / KAIPARA
FRANCHISEE FOR
G.J.GARDNER HOMES
14 PERCY STREET,
KENSINGTON
P (09) 437 5666
www.gjgardner.co.nz

ALL CONSTRUCTION TO COMPLY WITH THE LOCAL AUTHORITY REQUIREMENTS, NZ BUILDING CODE/APPROVED DOCUMENTS, AND MEANS OF COMPLIANCE, INCL. NZS3604:2011

ALL DIMENSION AND LEVELS ARE TO BE CHECKED BY CONTRACTOR PRIOR TO COMMENCEMENT OF WORK. CONTRACTOR TO REPORT ANY DISCREPANCY.

DO NOT SCALE OFF PLANS

NEW DWELLING FOR
EDGE & RANDELL
LOT 8 SAMPSONS WAY
DARGAVILLE
KAIPARA

CONSENT

LEGAL DESCRIPTION
LOT NUMBER: **8**
DP NUMBER: **542244**

SITE INFORMATION
SITE AREA: **619m²**
CORROSION: **C**
DISTRICT PLAN ZONE: **RESIDENTIAL**
WIND ZONE: **HIGH**

DETAILS - WALL FRAMING SET OUT

JOB No:	390076
SHEET SIZE:	A3
SCALE:	1:20
DRAWN:	C. LIENERT
PUBLISHED:	30/03/2021

SHEET: 15
CHECKED: MS

FIXING TYPE A
0.7kN

2 x 90mm x 3.15 dia. plain steel wire nails driven vertically into stud.

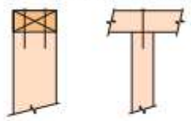

FIXING TYPE B
4.7kN

CHOOSE ANY OF THE 3 OPTIONS BELOW

2 x 90mm x 3.15 dia. plain steel wire nails driven vertically into stud.

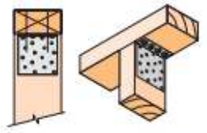

Plus
LUMBERLOK
6kN Stud Anchor
(CPC80)

2 x 90mm x 3.15 dia. plain steel wire nails driven vertically into stud.

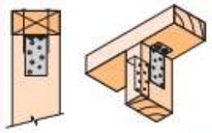

Plus
2 x LUMBERLOK
CPC40

Recommended for internal wall options to avoid lining issues

2 x 90mm x 3.15 dia. plain steel wire nails driven vertically into stud.

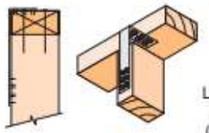

Plus
LUMBERLOK
Stud Strap
(one face only)

LUMBERLOK STUD TO TOP PLATE FIXING
1:100

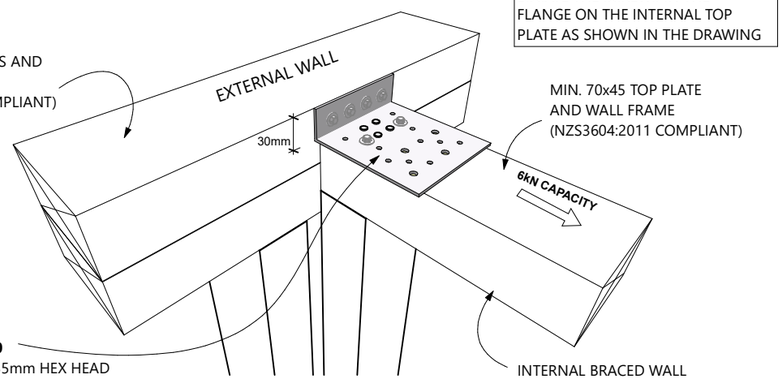

NOTE:
LOCATE THE SCREWS IN THE FLANGE ON THE INTERNAL TOP PLATE AS SHOWN IN THE DRAWING

LUMBERLOK CPC80
-4 x TYPE 17-14g x 35mm HEX HEAD SCREWS TO THE EXTERNAL TOP PLATE
-2 x TYPE 17-14g x 35mm HEX HEAD SCREWS TO THE INTERNAL TOP PLATE
-4 x 30 x 3.15mm LUMBERLOK PRODUCT NAILS TO THE INTERNAL TOP PLATE

COMPLIES WITH NZS3604:2011 CLAUSE 8.7.3.4

RS Eng Ltd
Consulting Engineers
This drawing is in accordance with our calculations where applicable.
per .....
Chartered Professional Engineer

INTERNAL WALL DROP CONNECTION DETAIL
1:20

Kaipara District Council
Approved Building Consent Document

BC210208 - Pg 17 of 29

2/07/2021 ComplyNZ

LINTEL FIXING OPTIONS

LUMBERL(

TYPE E
1.4kN

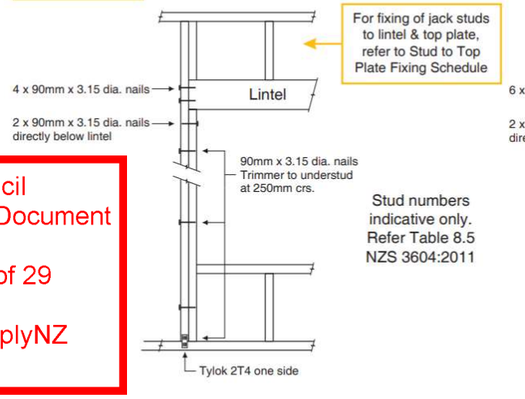

TYPE F
4.0kN

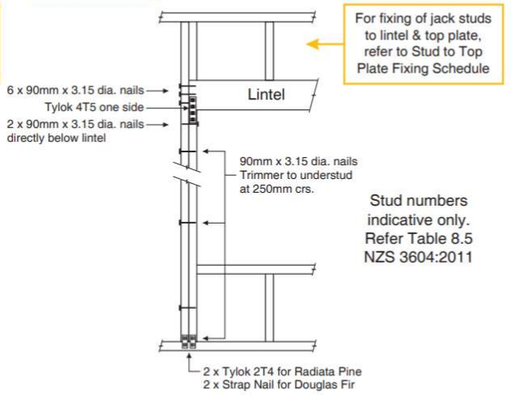

TYPE G
7.5kN

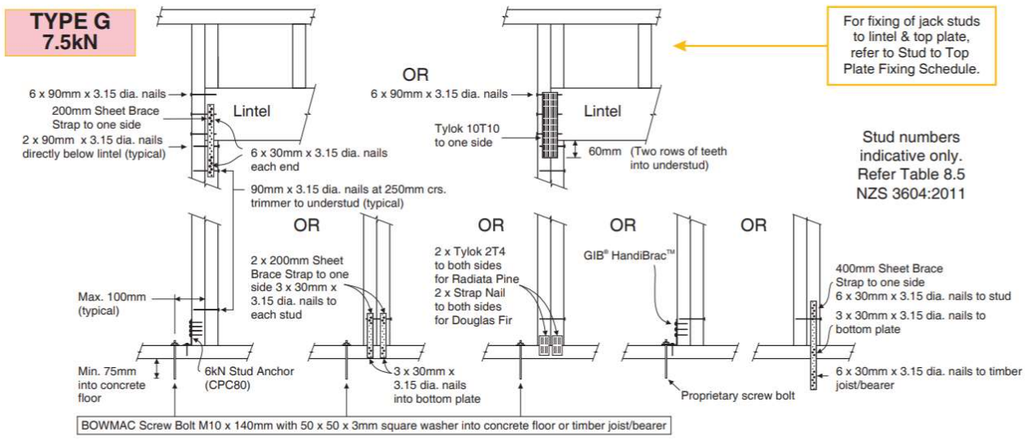

TYPE H
13.5kN

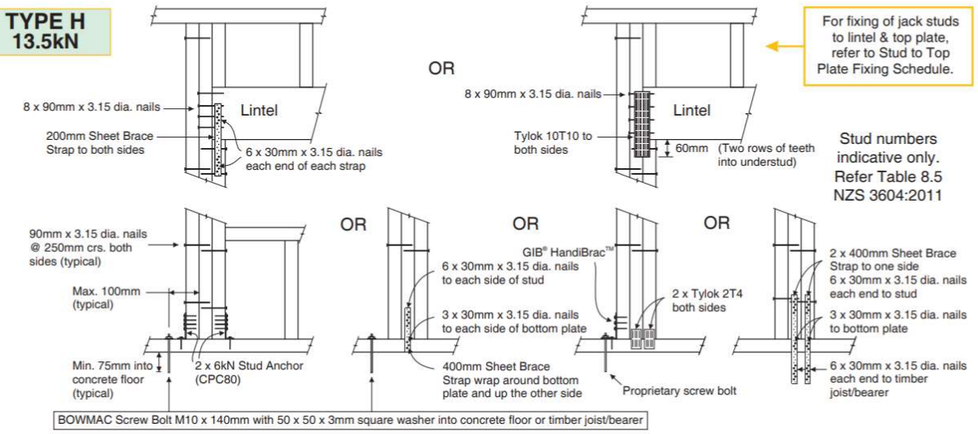

LUMBERLOK LINTEL FIXING SCHEDULE
1:100

COPYRIGHT - THIS DRAWING REMAINS THE PROPERTY OF G.J. GARDNER HOMES AND IS PROVIDED FOR THE USE DESCRIBED AND MAY NOT BE USED OR REPRODUCED IN WHOLE OR IN PART WITHOUT PERMISSION

G.J. Gardner. HOMES

SUDFELT CONSTRUCTION LTD
WHANGAREI / KAIPARA
FRANCHISEE FOR
G.J.GARDNER HOMES
14 PERCY STREET,
KENSINGTON
P (09) 437 5666
www.gjgardner.co.nz

ALL CONSTRUCTION TO COMPLY WITH THE LOCAL AUTHORITY REQUIREMENTS, NZ BUILDING CODE/APPROVED DOCUMENTS, AND MEANS OF COMPLIANCE, INCL. NZS3604:2011

ALL DIMENSION AND LEVELS ARE TO BE CHECKED BY CONTRACTOR PRIOR TO COMMENCEMENT OF WORK. CONTRACTOR TO REPORT ANY DISCREPANCY.

DO NOT SCALE OFF PLANS

NEW DWELLING FOR
EDGE & RANDELL
LOT 8 SAMPSONS WAY
DARGAVILLE
KAIPARA

CONSENT

LEGAL DESCRIPTION
LOT NUMBER: **8**
DP NUMBER: **542244**
SITE INFORMATION
SITE AREA: **619m²**
CORROSION: **C**
DISTRICT PLAN ZONE: **RESIDENTIAL**
WIND ZONE: **HIGH**

DETAILS - FRAMING FIXINGS

JOB No: **390076**
SHEET SIZE: **A3**
SCALE: **1:100, 1:20**
DRAWN: **C. LIENERT**
PUBLISHED: **23/03/2021**
SHEET: 16
CHECKED: MS

Kaipara District Council
Approved Building Consent Document

BC210208 - Pg 18 of 29

2/07/2021 ComplyNZ

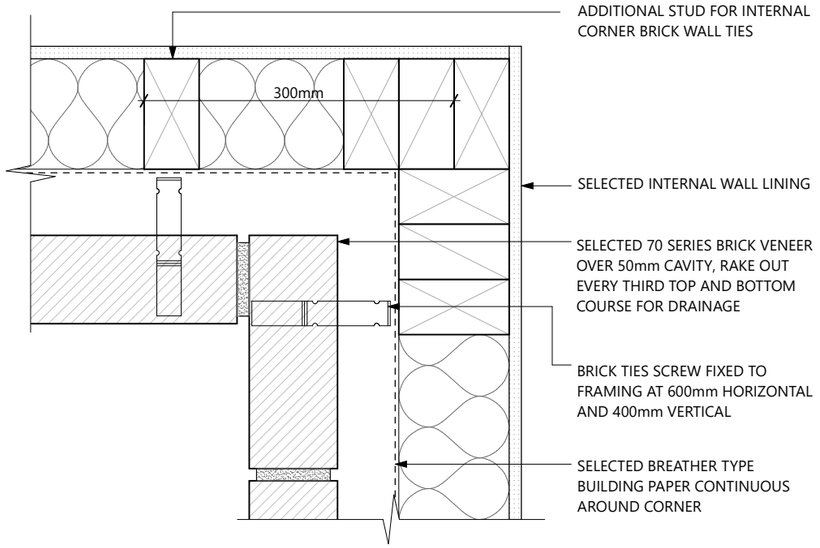

D01 - BRICK INTERNAL CORNER DETAIL 1:5

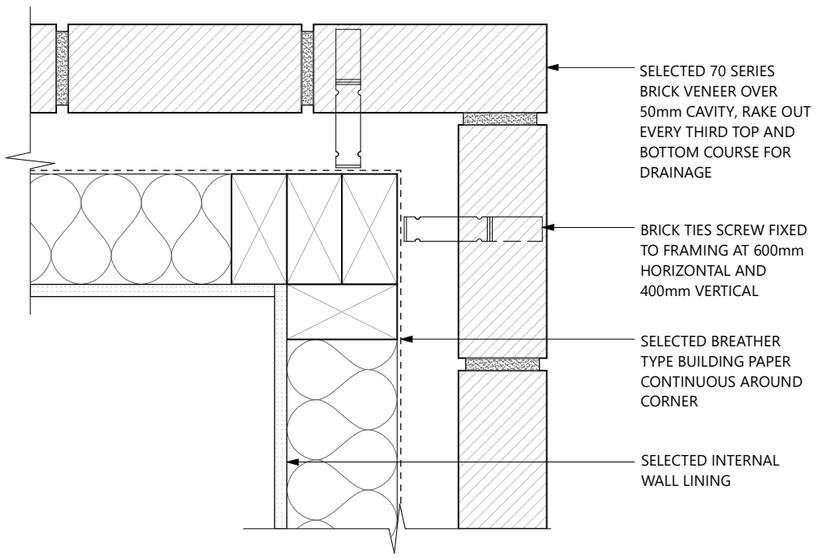

D02 - BRICK EXTERNAL CORNER DETAIL 1:5

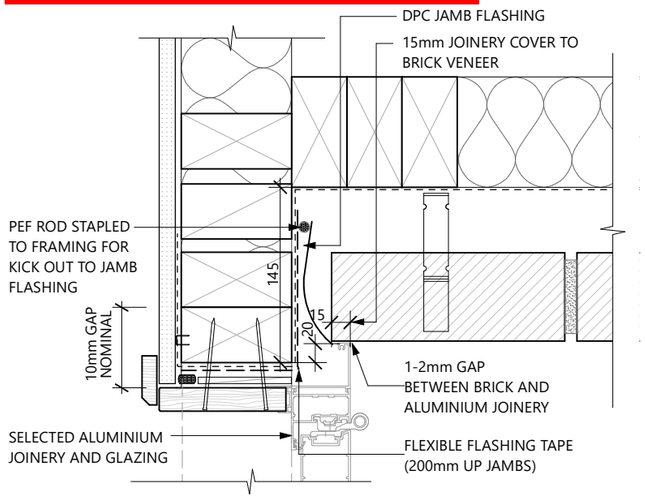

D03 - BRICK TO JOINERY JAMB DETAIL 1:5

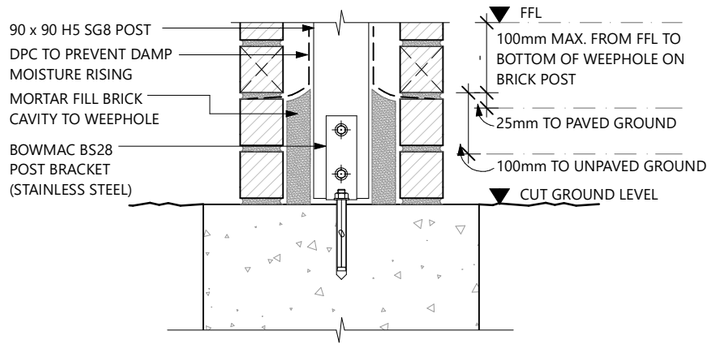

D04 - BRICK POST DETAIL 1:10

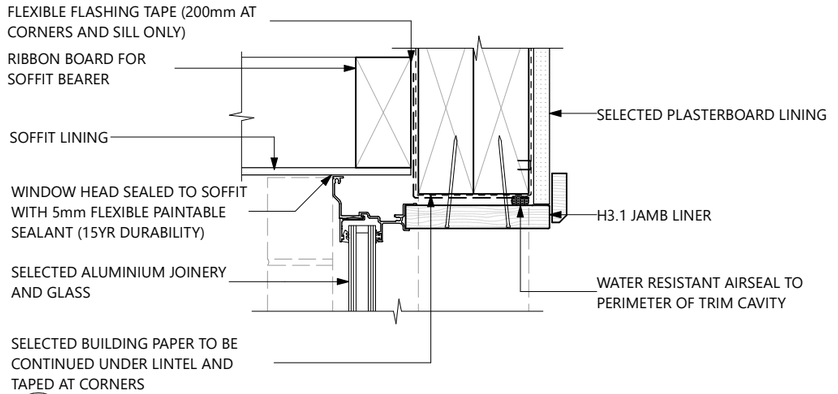

D05 - BRICK HEAD SOFFIT DETAIL 1:5

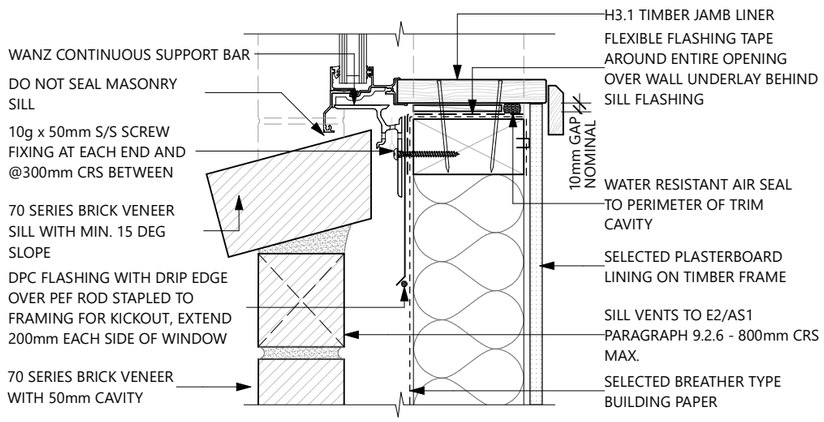

D06 - BRICK SILL DETAIL 1:5

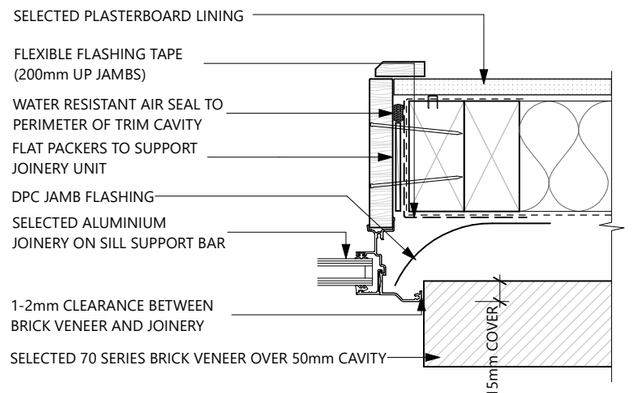

D07 - BRICK JAMB DETAIL 1:5

G.J. Gardner. HOMES

COPYRIGHT - THIS DRAWING REMAINS THE PROPERTY OF G.J. GARDNER HOMES AND IS PROVIDED FOR THE USE DESCRIBED AND MAY NOT BE USED OR REPRODUCED IN WHOLE OR IN PART WITHOUT PERMISSION

SUDFELT CONSTRUCTION LTD
WHANGAREI / KAIPARA
FRANCHISEE FOR
G.J.GARDNER HOMES
14 PERCY STREET,
KENSINGTON
P (09) 437 5666
www.gjgardner.co.nz

ALL CONSTRUCTION TO COMPLY WITH THE LOCAL AUTHORITY REQUIREMENTS, NZ BUILDING CODE/APPROVED DOCUMENTS, AND MEANS OF COMPLIANCE, INCL. NZS3604:2011

ALL DIMENSION AND LEVELS ARE TO BE CHECKED BY CONTRACTOR PRIOR TO COMMENCEMENT OF WORK. CONTRACTOR TO REPORT ANY DISCREPANCY.

DO NOT SCALE OFF PLANS

NEW DWELLING FOR
EDGE & RANDELL
LOT 8 SAMPSONS WAY
DARGAVILLE
KAIPARA

CONSENT

LEGAL DESCRIPTION
LOT NUMBER: **8**
DP NUMBER: **542244**

SITE INFORMATION
SITE AREA: **619m²**
CORROSION: **C**
DISTRICT PLAN ZONE: **RESIDENTIAL**
WIND ZONE: **HIGH**

DETAILS - CLADDING

JOB No: **390076**
SHEET SIZE: **A3**
SCALE: **1:5, 1:10**
DRAWN: **C. LIENERT**
PUBLISHED: **30/03/2021**
SHEET: 17
CHECKED: MS

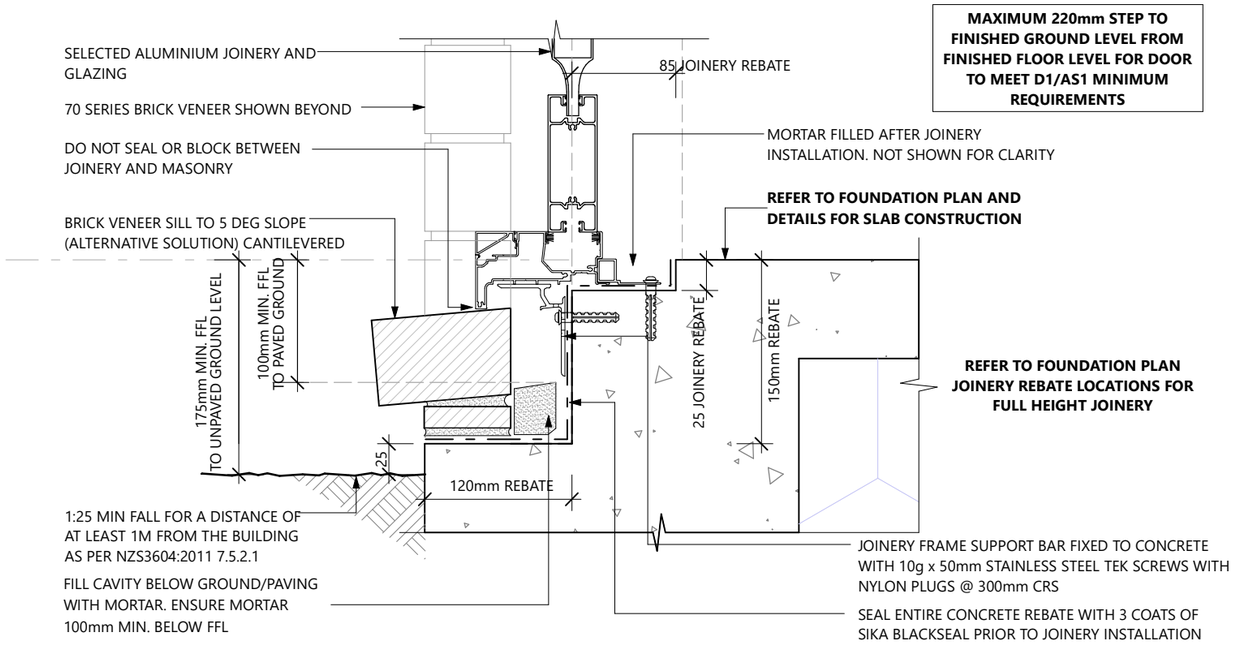

D08
-

BRICK DOOR SILL DETAIL (WITH REBATE)
1:5

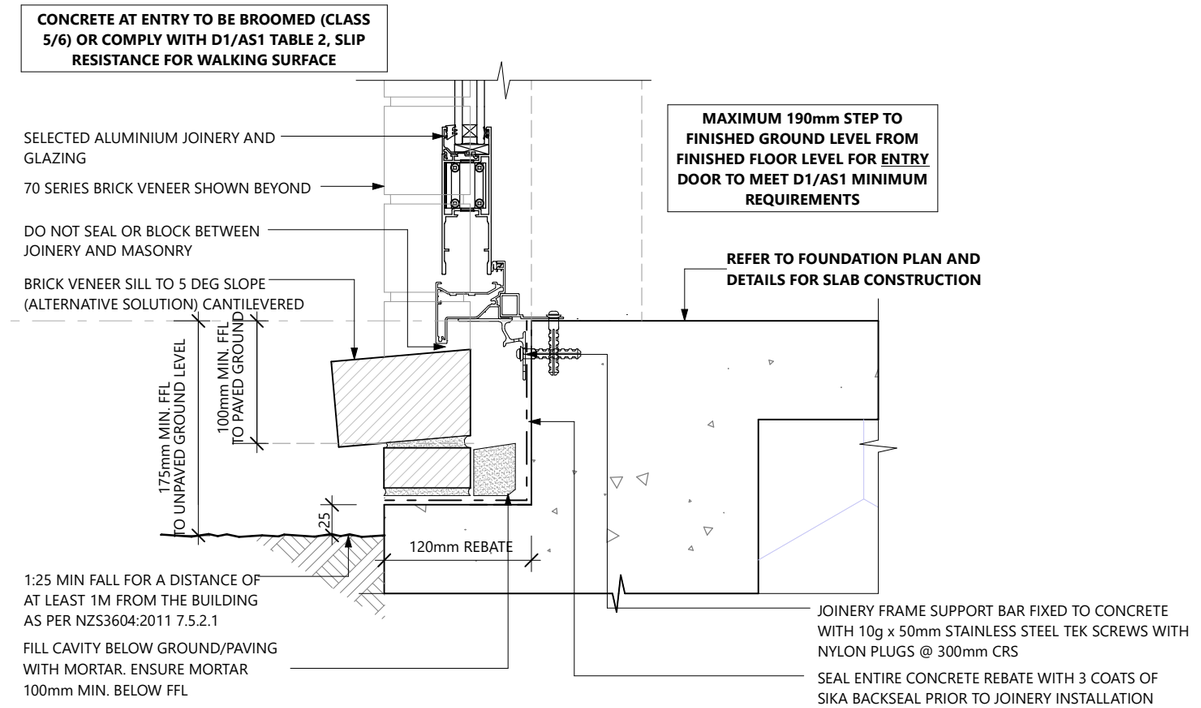

D09
-

BRICK DOOR SILL DETAIL (NO REBATE / ENTRY DOOR)
1:5

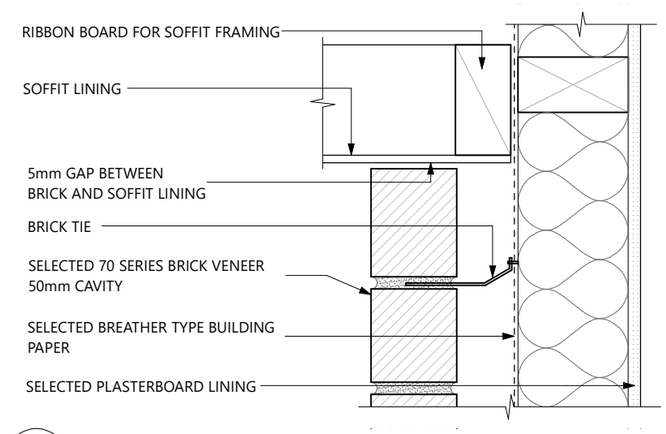

D10
-

BRICK SOFFIT DETAIL
1:5

Kaipara District Council
Approved Building Consent Document
BC210208 - Pg 19 of 29
2/07/2021 ComplyNZ

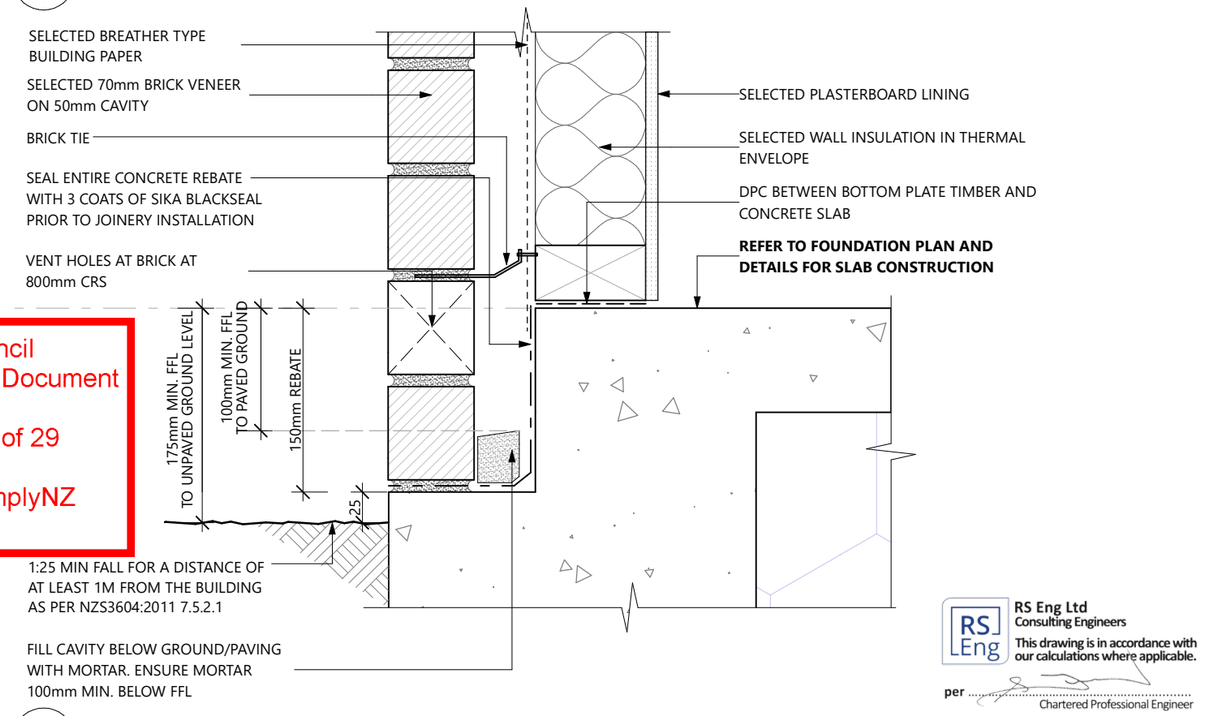

D11
-

BRICK TO FOUNDATION DETAIL
1:5

RS Eng Ltd
Consulting Engineers
This drawing is in accordance with our calculations where applicable.
per .....
Chartered Professional Engineer

COPYRIGHT - THIS DRAWING REMAINS THE PROPERTY OF G.J. GARDNER HOMES AND IS PROVIDED FOR THE USE DESCRIBED AND MAY NOT BE USED OR REPRODUCED IN WHOLE OR IN PART WITHOUT PERMISSION

G.J. Gardner. HOMES

SUDFELT CONSTRUCTION LTD
WHANGAREI / KAIPARA
FRANCHISEE FOR
G.J.GARDNER HOMES
14 PERCY STREET,
KENSINGTON
P (09) 437 5666
www.gjgardner.co.nz

ALL CONSTRUCTION TO COMPLY WITH THE LOCAL AUTHORITY REQUIREMENTS, NZ BUILDING CODE/APPROVED DOCUMENTS, AND MEANS OF COMPLIANCE, INCL. NZS3604:2011

ALL DIMENSION AND LEVELS ARE TO BE CHECKED BY CONTRACTOR PRIOR TO COMMENCEMENT OF WORK. CONTRACTOR TO REPORT ANY DISCREPANCY.

DO NOT SCALE OFF PLANS

NEW DWELLING FOR
EDGE & RANDELL
LOT 8 SAMPSONS WAY
DARGAVILLE
KAIPARA

CONSENT

LEGAL DESCRIPTION
LOT NUMBER: **8**
DP NUMBER: **542244**

SITE INFORMATION
SITE AREA: **619m²**
CORROSION: **C**
DISTRICT PLAN ZONE: **RESIDENTIAL**
WIND ZONE: **HIGH**

DETAILS - CLADDING

JOB No: **390076**
SHEET SIZE: **A3**
SCALE: **1:5**
DRAWN: **C. LIENERT**
PUBLISHED: **23/03/2021**
SHEET: 18
CHECKED: MS

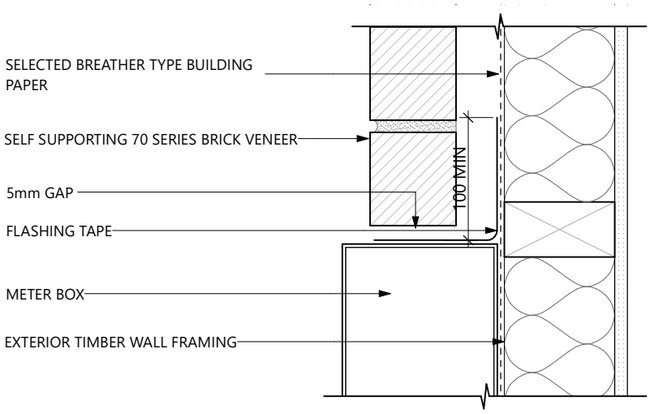

D12 - BRICK METERBOX HEAD DETAIL 1:5

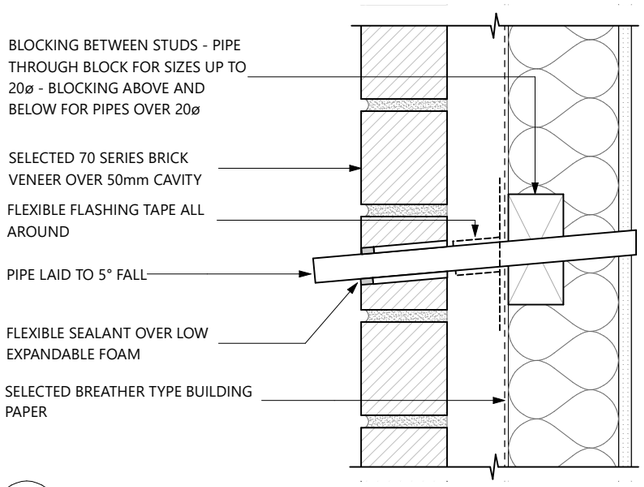

D13 - BRICK PIPE PENETRATION DETAIL 1:5

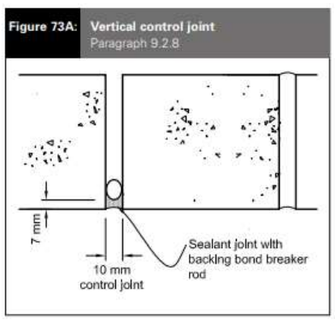

BRICK VENEER *(E2/AS1 9.2.8.1 & SPECIFIC DESIGN)*

LONGITUDINAL SHRINKAGE STRESSES IN BRICK VENEER SHALL BE CONTROLLED BY PROVIDING VERTICAL CONTROL JOINTS AT NO MORE THAN 5m CENTRES

VERTICAL CONTROL JOINTS SHALL BE LOCATED:
(a) WITHIN 600mm OF 'T' JOINTS
(b) WITHIN 600mm OF 'L' SHAPED CORNERS OR BY RESTRICTING THE SPACING TO THE NEXT CONTROL JOINT TO 3.2m MAX.
(c) AT CHANGES IN WALL HEIGHT, EXCEEDING 600mm
(d) AT CHANGES IN WALL THICKNESS

D14 - BRICK VENEER CONTROL JOINT 1:5

Kaipara District Council
Approved Building Consent Document

BC210208 - Pg 20 of 29

2/07/2021 ComplyNZ

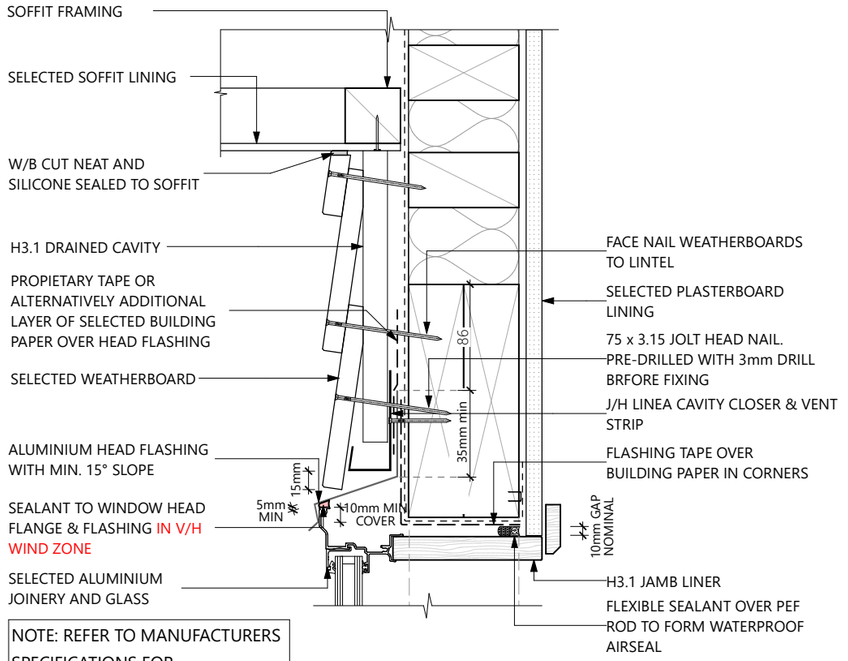

NOTE: REFER TO MANUFACTURERS SPECIFICATIONS FOR WEATHERBOARD FIXING PATTEN

D15 - WEATHERBOARD ABOVE JOINERY IN ALFRESCO 1:5

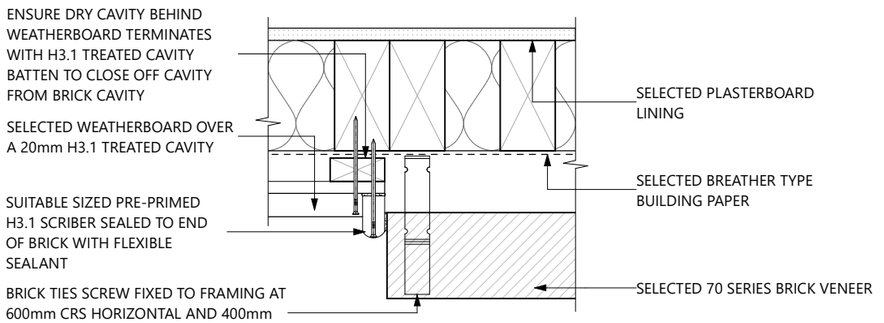

D16 - BRICK TO WEATHERBOARD HORIZONTAL JOINT 1:5

G.J. Gardner. HOMES

COPYRIGHT - THIS DRAWING REMAINS THE PROPERTY OF G.J. GARDNER HOMES AND IS PROVIDED FOR THE USE DESCRIBED AND MAY NOT BE USED OR REPRODUCED IN WHOLE OR IN PART WITHOUT PERMISSION

SUDFELT CONSTRUCTION LTD
WHANGAREI / KAIPARA
FRANCHISEE FOR
G.J.GARDNER HOMES
14 PERCY STREET,
KENSINGTON
P (09) 437 5666
www.gjgardner.co.nz

ALL CONSTRUCTION TO COMPLY WITH THE LOCAL AUTHORITY REQUIREMENTS, NZ BUILDING CODE/APPROVED DOCUMENTS, AND MEANS OF COMPLIANCE, INCL. NZS3604:2011

ALL DIMENSION AND LEVELS ARE TO BE CHECKED BY CONTRACTOR PRIOR TO COMMENCEMENT OF WORK. CONTRACTOR TO REPORT ANY DISCREPANCY.

DO NOT SCALE OFF PLANS

NEW DWELLING FOR
EDGE & RANDELL
LOT 8 SAMPSONS WAY
DARGAVILLE
KAIPARA

CONSENT

LEGAL DESCRIPTION
LOT NUMBER: **8**
DP NUMBER: **542244**

SITE INFORMATION
SITE AREA: **619m²**
CORROSION: **C**
DISTRICT PLAN ZONE: **RESIDENTIAL**
WIND ZONE: **HIGH**

DETAILS - CLADDING

JOB No: **390076**
SHEET SIZE: **A3**
SCALE: **1:5**
DRAWN: **C. LIENERT**
PUBLISHED: **30/03/2021**
SHEET: 19
CHECKED: MS

Kaipara District Council
Approved Building Consent Document

BC210208 - Pg 21 of 29

2/07/2021 ComplyNZ

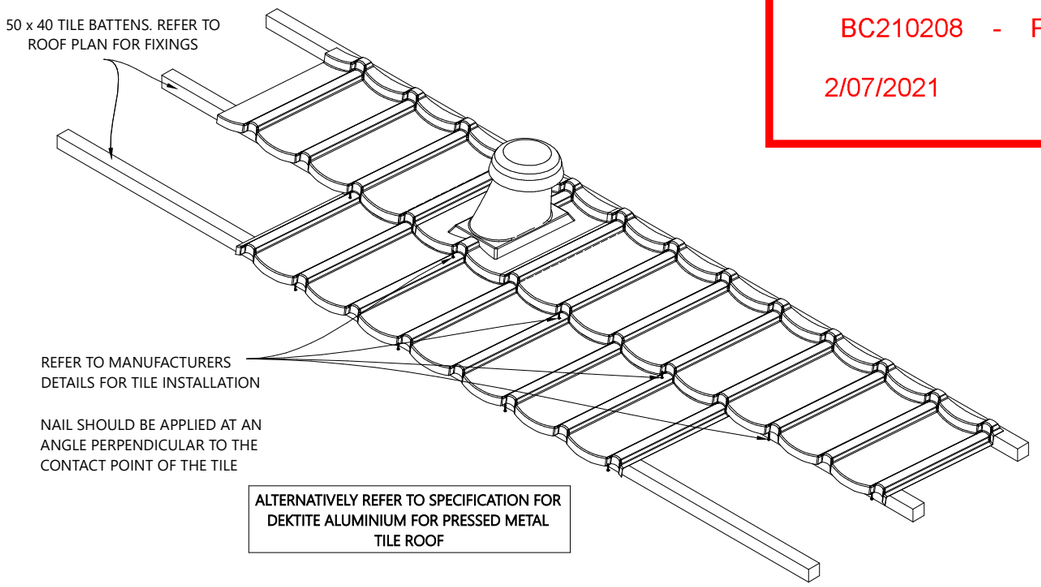

D
-

METAL TILE MANUFACTURERS SANITARY VENT
1:10

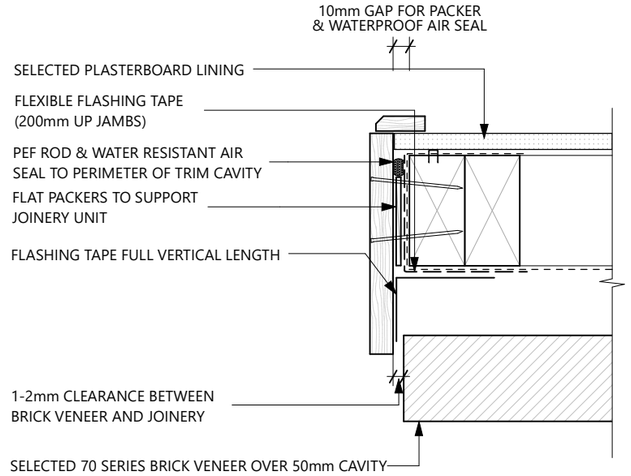

GARAGE DOOR JAMB DETAIL (BRICK) 1:5

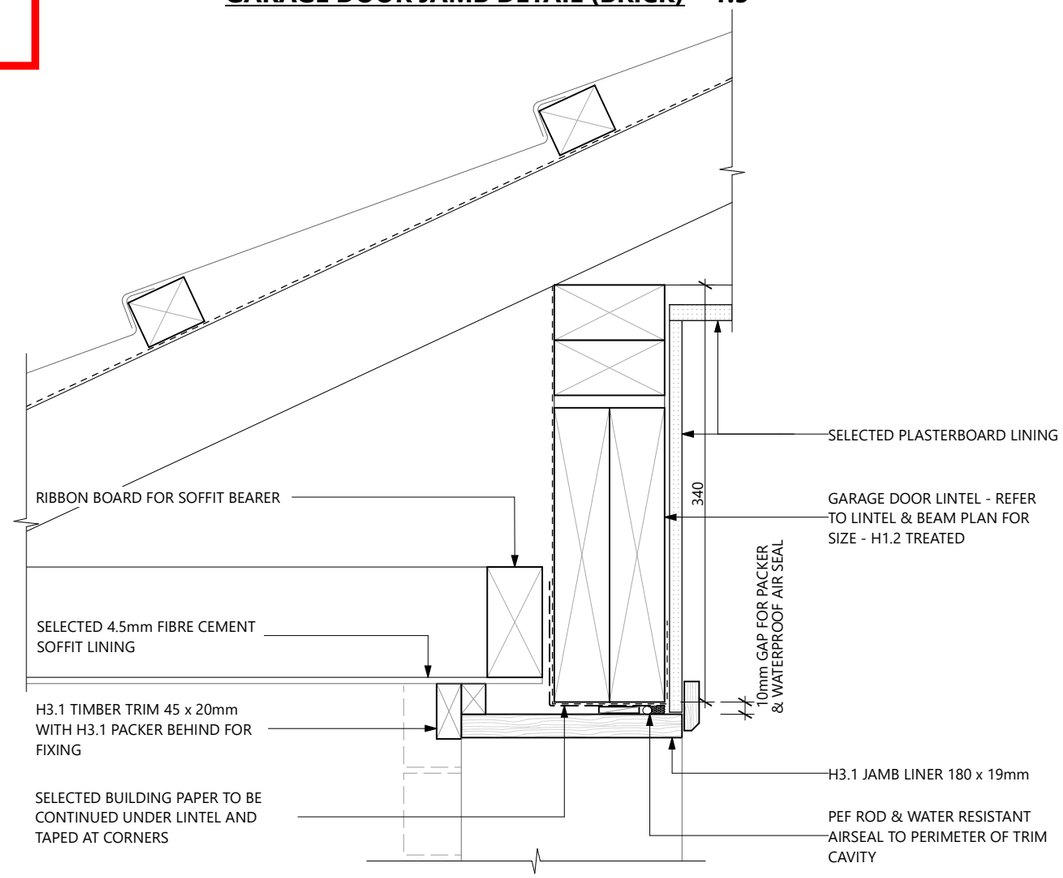

GARAGE DOOR HEAD DETAIL (BRICK) 1:5

D
-

GARAGE DOOR DETAIL
1:5

G.J. Gardner. HOMES

SUDFELT CONSTRUCTION LTD
WHANGAREI / KAIPARA
FRANCHISEE FOR
G.J.GARDNER HOMES
14 PERCY STREET,
KENSINGTON
P (09) 437 5666
www.gjgardner.co.nz

COPYRIGHT - THIS DRAWING REMAINS THE PROPERTY OF G.J. GARDNER HOMES AND IS PROVIDED FOR THE USE DESCRIBED AND MAY NOT BE USED OR REPRODUCED IN WHOLE OR IN PART WITHOUT PERMISSION

ALL CONSTRUCTION TO COMPLY WITH THE LOCAL AUTHORITY REQUIREMENTS, NZ BUILDING CODE/APPROVED DOCUMENTS, AND MEANS OF COMPLIANCE, INCL. NZS3604:2011

ALL DIMENSION AND LEVELS ARE TO BE CHECKED BY CONTRACTOR PRIOR TO COMMENCEMENT OF WORK. CONTRACTOR TO REPORT ANY DISCREPANCY.

DO NOT SCALE OFF PLANS

NEW DWELLING FOR
EDGE & RANDELL
LOT 8 SAMPSONS WAY
DARGAVILLE
KAIPARA

CONSENT

LEGAL DESCRIPTION
LOT NUMBER: **8**
DP NUMBER: **542244**

SITE INFORMATION
SITE AREA: **619m²**
CORROSION: **C**
DISTRICT PLAN ZONE: **RESIDENTIAL**
WIND ZONE: **HIGH**

DETAILS - CLADDING

JOB No: **390076**
SHEET SIZE: **A3**
SCALE: **1:5, 1:10**
DRAWN: **C. LIENERT**
PUBLISHED: **30/03/2021**
SHEET: 20
CHECKED: MS

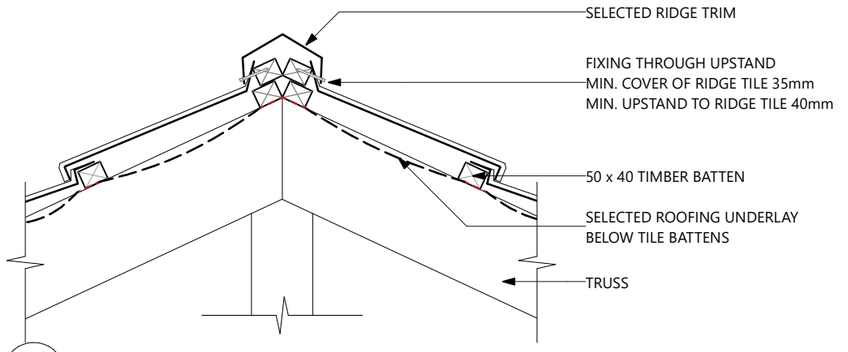

D
-

METAL TILE RIDGE DETAIL
1:10

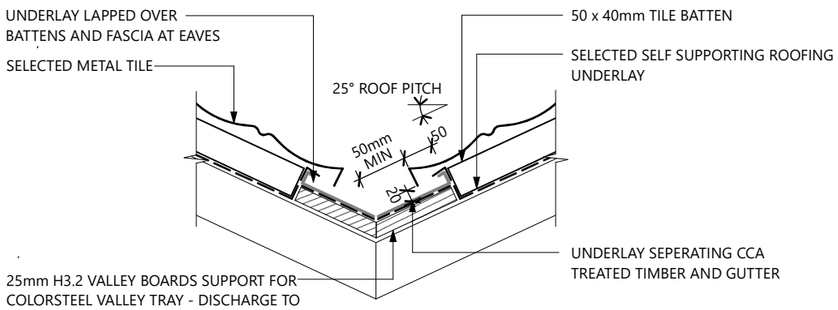

VALLEY TO BE WATERPROOFED IN ACCORDANCE WITH E2 CLAUSE 8.1.6.2

D
-

METAL TILE VALLEY GUTTER
1:10

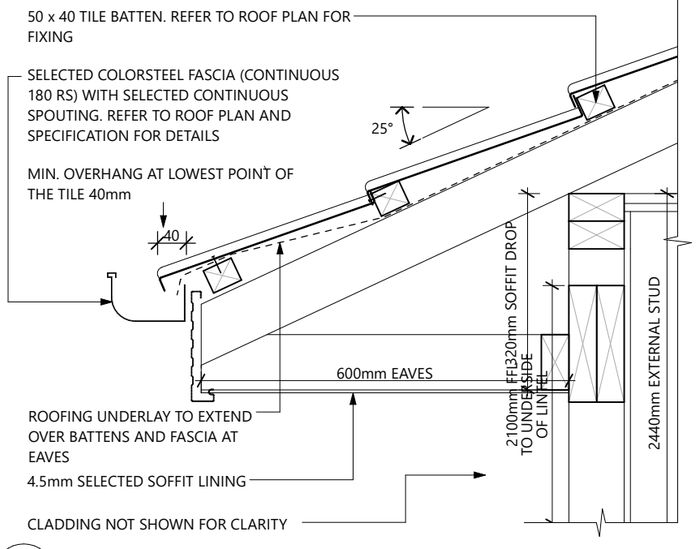

D
-

METAL TILE 25° EAVES DETAIL
1:10

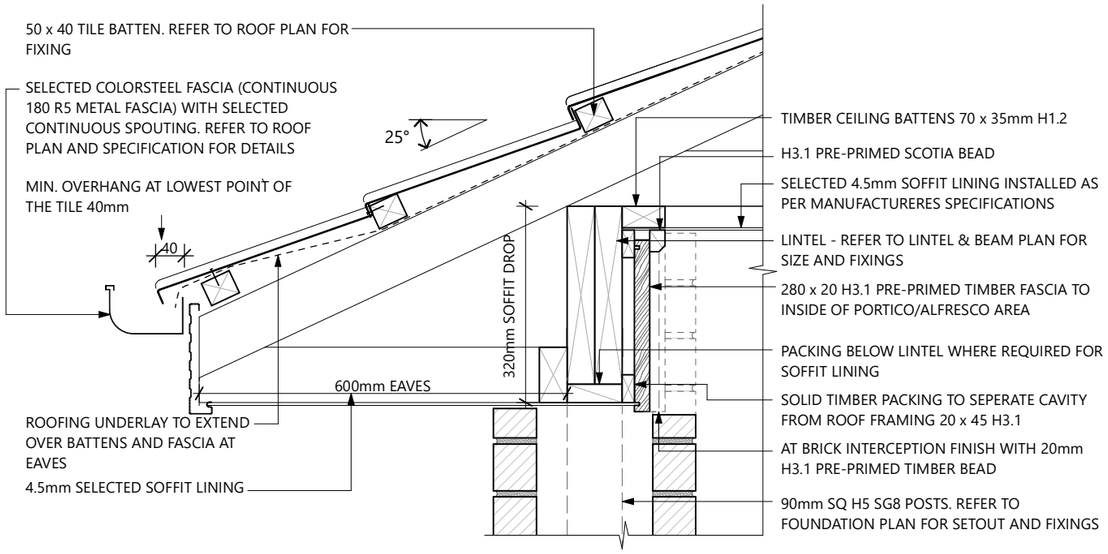

D
-

ENTRY / ALFRESCO ENTRY DETAIL
1:10

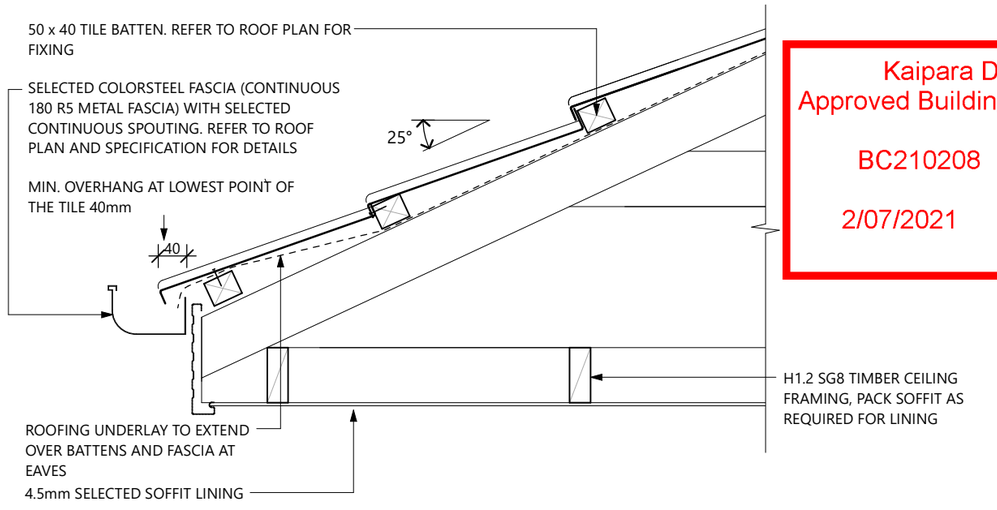

Kaipara District Council
Approved Building Consent Document
BC210208 - Pg 22 of 29
2/07/2021 ComplyNZ

UPDATED: 03/07/20

ENTRY SOFFIT DETAIL
CANTILEVERED TRUSS

D
-

FLAT SOFFIT IN ENTRY EAVES DETAIL
1:10

G.J. Gardner. HOMES

COPYRIGHT - THIS DRAWING REMAINS THE PROPERTY OF G.J. GARDNER HOMES AND IS PROVIDED FOR THE USE DESCRIBED AND MAY NOT BE USED OR REPRODUCED IN WHOLE OR IN PART WITHOUT PERMISSION

SUDFELT CONSTRUCTION LTD
WHANGAREI / KAIPARA
FRANCHISEE FOR
G.J.GARDNER HOMES
14 PERCY STREET,
KENSINGTON
P (09) 437 5666
www.gjgardner.co.nz

ALL CONSTRUCTION TO COMPLY WITH THE LOCAL AUTHORITY REQUIREMENTS, NZ BUILDING CODE/APPROVED DOCUMENTS, AND MEANS OF COMPLIANCE, INCL. NZS3604:2011

ALL DIMENSION AND LEVELS ARE TO BE CHECKED BY CONTRACTOR PRIOR TO COMMENCEMENT OF WORK. CONTRACTOR TO REPORT ANY DISCREPANCY.

DO NOT SCALE OFF PLANS

NEW DWELLING FOR
EDGE & RANDELL
LOT 8 SAMPSONS WAY
DARGAVILLE
KAIPARA

CONSENT

LEGAL DESCRIPTION
LOT NUMBER: **8**
DP NUMBER: **542244**
SITE INFORMATION
SITE AREA: **619m²**
CORROSION: **C**
DISTRICT PLAN ZONE: **RESIDENTIAL**
WIND ZONE: **HIGH**

DETAILS - CLADDING

JOB No: **390076**
SHEET SIZE: **A3**
SCALE: **1:10, 1:5**
DRAWN: **C. LIENERT**
PUBLISHED: **30/03/2021**
SHEET: 21
CHECKED: MS

Kaipara District Council
Approved Building Consent Document

BC210208 - Pg 23 of 29

2/07/2021 ComplyNZ

INSTALL **SIKALASTIC** WATERPROOF MEMBRANE AS PER MANUFACTURERS SPECIFICATIONS AND INSTALLATION DETAILS. TO BE INSTALLED BY A SUITABLY QUALIFIED PERSON AND TO PROVIDE PRODUCER STATEMENT 3 ON INSTALLATION. SILALASTIC WATERPROOFING MEMBRANE INSTALLATION DETAILS TO TAKE PRECDENCE OVER DETAILS.

NOTE:
BATHROOM & ENSUITE - ACRYLIC CLEARLITE SHOWER LINING AND TRAY
REFER TO SPECIFICATION FOR MANUFACTURERES INSTALLATION DETAILS

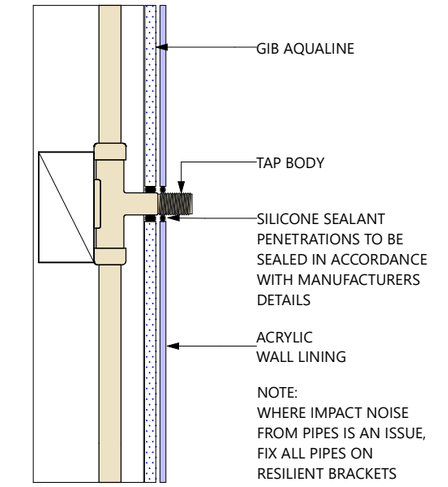

ID03 - PENETRATION DETAIL 1:5

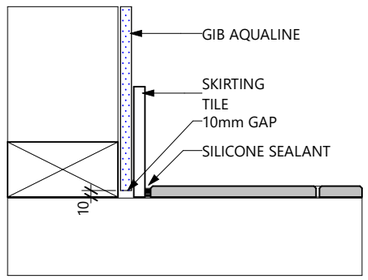

ID01 - WALL/FLOOR DETAIL 1:5

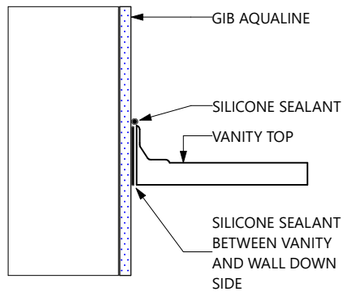

ID02 - VANITY TOP DETAIL 1:5

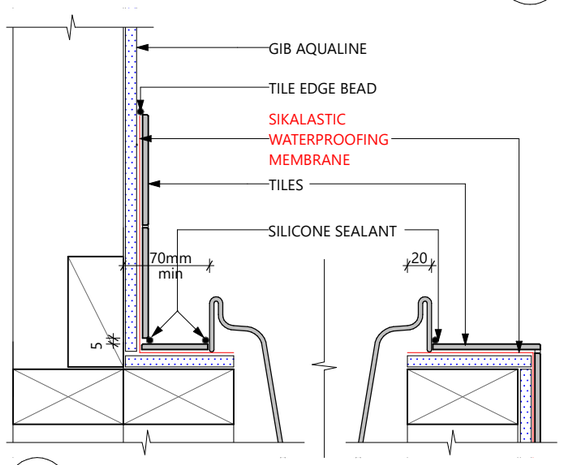

ID05 - BATH IN CRADLE DETAIL 1:5

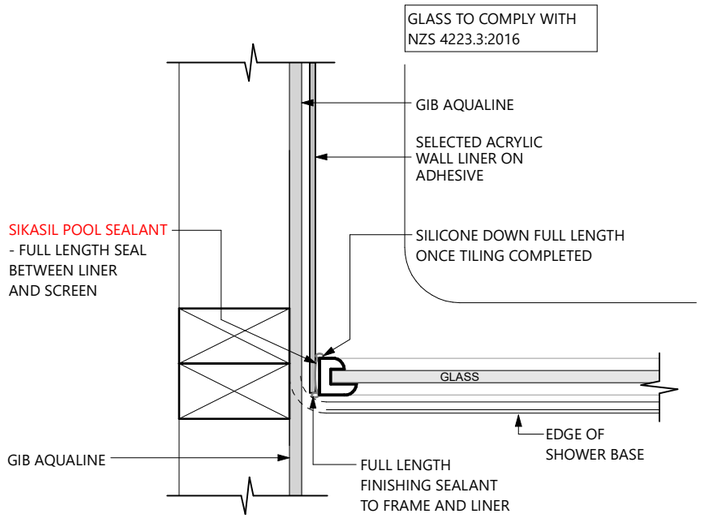

PLAN VIEW

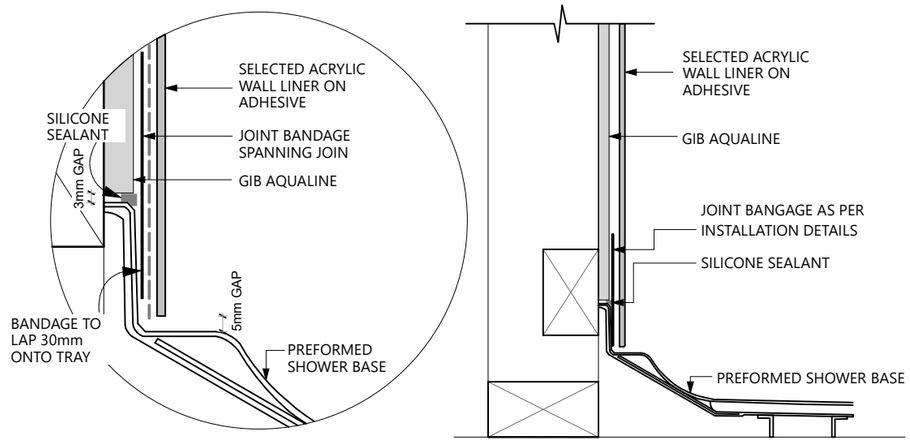

SECTION VIEW

ID07 - ACRYLIC SHOWER BASE WITH TILED WALLS 1:5

G.J. Gardner. HOMES

COPYRIGHT - THIS DRAWING REMAINS THE PROPERTY OF G.J. GARDNER HOMES AND IS PROVIDED FOR THE USE DESCRIBED AND MAY NOT BE USED OR REPRODUCED IN WHOLE OR IN PART WITHOUT PERMISSION

SUDFELT CONSTRUCTION LTD
WHANGAREI / KAIPARA
FRANCHISEE FOR
G.J.GARDNER HOMES
14 PERCY STREET,
KENSINGTON
P (09) 437 5666
www.gjgardner.co.nz

ALL CONSTRUCTION TO COMPLY WITH THE LOCAL AUTHORITY REQUIREMENTS, NZ BUILDING CODE/APPROVED DOCUMENTS, AND MEANS OF COMPLIANCE, INCL. NZS3604:2011

ALL DIMENSION AND LEVELS ARE TO BE CHECKED BY CONTRACTOR PRIOR TO COMMENCEMENT OF WORK. CONTRACTOR TO REPORT ANY DISCREPANCY.

DO NOT SCALE OFF PLANS

NEW DWELLING FOR
EDGE & RANDELL
LOT 8 SAMPSONS WAY
DARGAVILLE
KAIPARA

CONSENT

LEGAL DESCRIPTION
LOT NUMBER: **8**
DP NUMBER: **542244**

SITE INFORMATION
SITE AREA: **619m²**
CORROSION: **C**
DISTRICT PLAN ZONE: **RESIDENTIAL**
WIND ZONE: **HIGH**

DETAIL - WET AREA

JOB No: **390076**
SHEET SIZE: **A3**
SCALE: **1:5**
DRAWN: **C. LIENERT**
PUBLISHED: **30/03/2021**
SHEET: 22
CHECKED: MS

PRIOR TO COMMENCEMENT OF FOUNDATION CONSTRUCTION

1. FOUNDATION PLAN TO BE READ IN CONJUNCTION WITH ENGINEER'S SITE SUITABILITY REPORT

2. CONTRACTOR IS TO LOCATE ALL EXISTING SEWER & STORMWATER PIPES BEFORE DIGGING ANY FOOTINGS.

3. CONTRACTOR IS TO REFER TO ENGINEERS FOUNDATION SPECIFICATIONS & CONDITIONS BEFORE DIGGING ANY FOOTINGS OR ORDERING ANY MATERIALS.

ALL DIMENSIONS TO EDGE OF SLAB INCLUDE 120mm BRICK REBATES
REFER TO WALL FRAMING PLAN FOR FRAMING SET OUT DIMENSIONS

Kaipara District Council
Approved Building Consent Document
BC210208 - Pg 24 of 29
2/07/2021 ComplyNZ

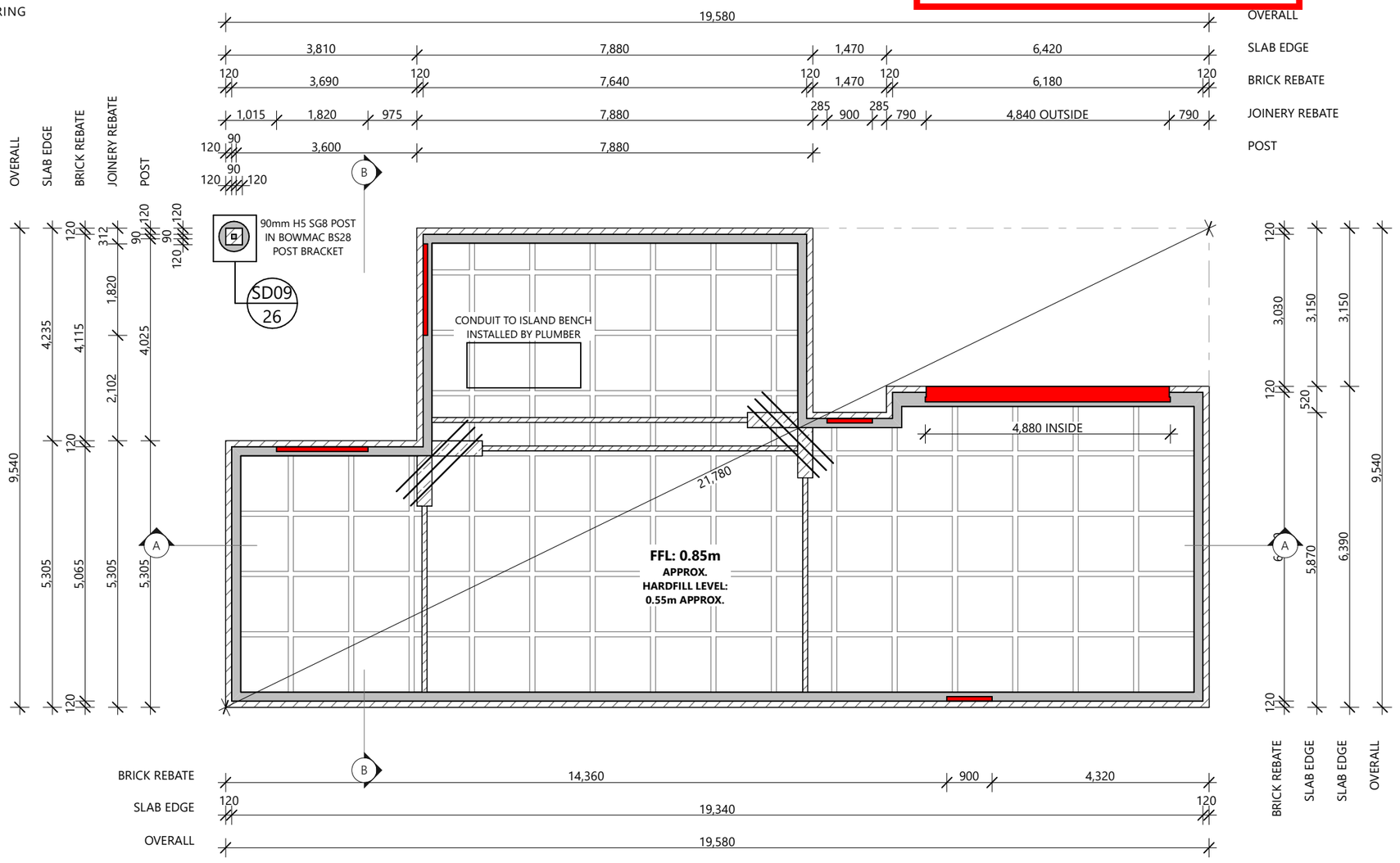

1. REFER TO G J GARDNER DRAWINGS FOR LOCATION OF ALL UNDERSLAB SERVICES AND SERVICE PENETRATIONS THROUGH FLOOR SLAB. ALL SERVICE PENETRATIONS ARE TO BE COORDINATED WITH POD LAYOUT PRIOR TO CONSTRUCTION TO ENSURE SERVICE PENETRATIONS THROUGH RIB RAFT ARE IN ACCORDANCE WITH RIBRAFT TECHNICAL MANUAL SECTION 6.3: SERVICES DETAILING

2. ALL FOUNDATION CONCRETE TO BE MIN 25**MPA** 28 DAY STRENGTH RAFTMIX.

3. RIB RAFT FLOOR SLAB TO BE CONSTRUCTED IN ACCORDANCE WITH THE FIRTH RIB RAFT MANUAL.

4. **85MM** THICK SLAB REINFORCED WITH **SE82 G500E** DUCTILE REINFORCING MESH WITH 30MM TOP COVER. WHERE RIGID FLOOR COVERINGS ARE PROPOSED (TILES, ETC.) USE **SE92 G500E** MESH.

5. GARAGE SLAB IS DESIGNED FOR RESIDENTIAL USE ONLY WITH VEHICLE LIMITED TO 2,500KG GROSS (AS/NZS1170 LOADING 2.5KPA/13KN)

6. RIBRAFT TO BE CONSTRUCTED ON DPM MATERIAL IN ACCORDANCE WITH NZS3604:2011 OVER 25MM TO 50mm MAXIMUM SAND BLINDING ON A **150mm** MINIMUM COMPACTED HARD FILL. HARD FILL SHALL EXTEND 1000MM MINIMUM BEYOND THE PERIMETER OR TWICE THE HARDFILL DEPTH (WHICHEVER IS THE GREATER.)

7. CONTROL JOINTS IN BRICK VENEER SHOULD BE ADOPTED AT 5.0M CRS MAX.

NOTE:
100mm RIB EXTENNDING BEYOND 300mm RIB PLACED CENTRALLY, MAY BE SHIFTED 100mm EACH WAY TO SUIT POD LAYOUT

FOUNDATION KEY

- 300mm WIDE x 310mm DEEP RIBRAFT EDGE BEAM WITH 120mm WIDE BRICK REBATE, 150mm DEEP
- 300mm SLAB THICKENING BEAM FOR INTERNAL LOAD BEARING WALL SUPPORT
- 100mm RIBRAFT INTERNAL BEAM (POD LAYOUT GOVERNED BY RIB)
- 100mm RIBRAFT INTERNAL BEAM
- 1100 x 1100 x 300 THICK RIBRAFT POLYSTYRENE PODS
- 25mm DEEP x 85mm WIDE REBATE FOR FULL HEIGHT JOINERY WHERE SPECIFIED
- 400mm WIDE x 395mm DEEP RIBRAFT EDGE BEAM WITH 20mm DEEP, 310mm WIDE GARAGE DOOR REBATE
- CORNER STEEL 3/HD12 2000mm @ 200mm CRS
- POST FOOTING 600mm ø WIDE x 1,000mm DEEP FOOTING

RS Eng Ltd
Consulting Engineers
This drawing is in accordance with our calculations where applicable.
per .....
Chartered Professional Engineer

G.J. Gardner. HOMES

COPYRIGHT - THIS DRAWING REMAINS THE PROPERTY OF G.J. GARDNER HOMES AND IS PROVIDED FOR THE USE DESCRIBED AND MAY NOT BE USED OR REPRODUCED IN WHOLE OR IN PART WITHOUT PERMISSION

SUDFELT CONSTRUCTION LTD
WHANGAREI / KAIPARA
FRANCHISEE FOR
G.J.GARDNER HOMES
14 PERCY STREET,
KENSINGTON
P (09) 437 5666
www.gjgardner.co.nz

ALL CONSTRUCTION TO COMPLY WITH THE LOCAL AUTHORITY REQUIREMENTS, NZ BUILDING CODE/APPROVED DOCUMENTS, AND MEANS OF COMPLIANCE, INCL. NZS3604:2011

ALL DIMENSION AND LEVELS ARE TO BE CHECKED BY CONTRACTOR PRIOR TO COMMENCEMENT OF WORK. CONTRACTOR TO REPORT ANY DISCREPANCY.

DO NOT SCALE OFF PLANS

NEW DWELLING FOR
EDGE & RANDELL
LOT 8 SAMPSONS WAY
DARGAVILLE
KAIPARA

CONSENT

LEGAL DESCRIPTION
LOT NUMBER: **8**
DP NUMBER: **542244**

SITE INFORMATION
SITE AREA: **619m²**
CORROSION: **C**
DISTRICT PLAN ZONE: **RESIDENTIAL**
WIND ZONE: **HIGH**

FOUNDATION

JOB No: **390076**
SHEET SIZE: **A3**
SCALE: **1:100**
DRAWN: **C. LIENERT**
PUBLISHED: **23/03/2021**
SHEET: 23
CHECKED: MS

Kaipara District Council
Approved Building Consent Document

BC210208 - Pg 25 of 29

2/07/2021 ComplyNZ

HARDFILL TO BE A MINIMUM OF 150mm COMPACTED AND TO EXTEND 1.0m FROM PERIMETER EDGE OR TWICE THE HARDFILL DEPTH (WHICHEVER THE GREATER). 25mm MIN. SAND BLINDING ABOVE TO EXTEND 500mm MIN BEYOND SLAB PERIMETER.
REFER TO ARCHITECTURAL DETAILS FOR WATERPROOFING AND CLADDING REQUIREMENTS.

MESH SUBSTITUTES & SLAB LENGTHS

SE72	UP TO 23m
SE82	UP TO 30m
SE62 + 1/HD12 TOP OF EACH RIB	UP TO 30m

HIGHLIGHTED RED, OPTION SHOWN BELOW
MESH LARGER THAN SE72 REQUIRE A 95mm SLAB

MINIMUM REINFORCING COVER:

AGAINST GROUND - 75mm
AGAINST FORMWORK - 50mm
TOP COVER TO MESH - 30mm

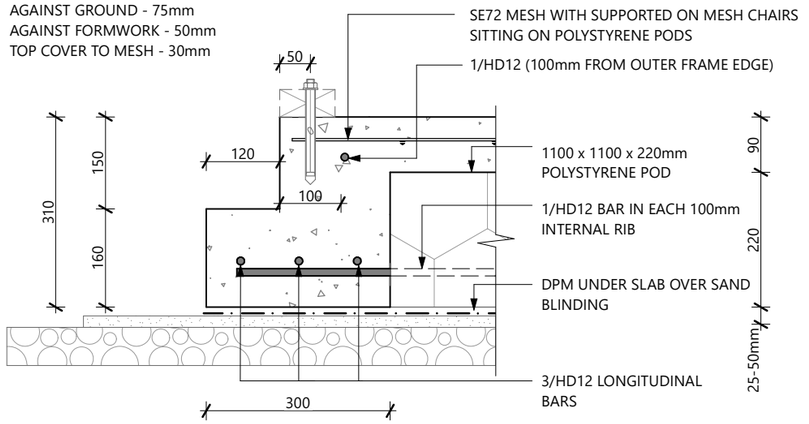

SD01 / 24 — 300mm RIBRAFT EDGE BEAM WITH REBATE 1:10

MINIMUM REINFORCING COVER:

AGAINST GROUND - 75mm
AGAINST FORMWORK - 50mm
TOP COVER TO MESH - 30mm
CONCRETE DRIVE INDICATIVE

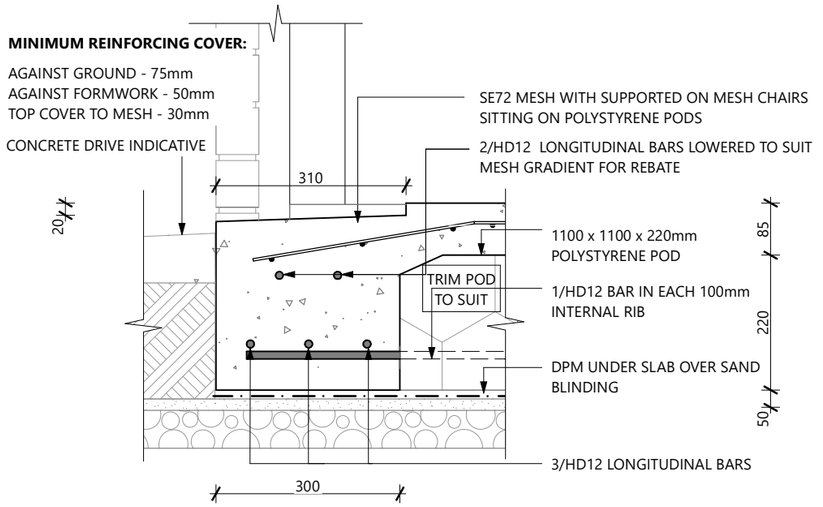

SD02 / 24 — RIBRAFT GARAGE DOOR REBATE DETAIL 1:10

MINIMUM REINFORCING COVER:

AGAINST GROUND - 75mm
AGAINST FORMWORK - 50mm
TOP COVER TO MESH - 30mm

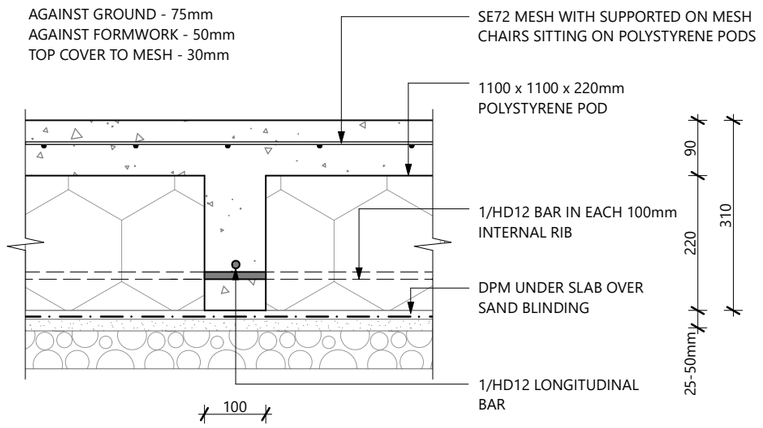

SD03 / 24 — 100mm RIBRAFT INTERNAL BEAM 1:10

MINIMUM REINFORCING COVER:

AGAINST GROUND - 75mm
AGAINST FORMWORK - 50mm
TOP COVER TO MESH - 30mm

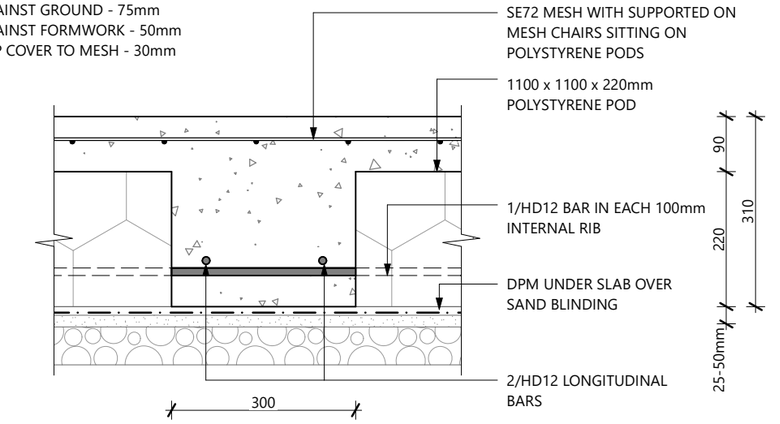

SD04 / 24 — 300mm RIBRAFT INTERNAL BEAM 1:10

RS Eng Ltd
Consulting Engineers
This drawing is in accordance with our calculations where applicable.
per .....
Chartered Professional Engineer

G.J. Gardner. HOMES

COPYRIGHT - THIS DRAWING REMAINS THE PROPERTY OF G.J. GARDNER HOMES AND IS PROVIDED FOR THE USE DESCRIBED AND MAY NOT BE USED OR REPRODUCED IN WHOLE OR IN PART WITHOUT PERMISSION

SUDFELT CONSTRUCTION LTD
WHANGAREI / KAIPARA
FRANCHISEE FOR
G.J.GARDNER HOMES
14 PERCY STREET,
KENSINGTON
P (09) 437 5666
www.gjgardner.co.nz

ALL CONSTRUCTION TO COMPLY WITH THE LOCAL AUTHORITY REQUIREMENTS, NZ BUILDING CODE/APPROVED DOCUMENTS, AND MEANS OF COMPLIANCE, INCL. NZS3604:2011

ALL DIMENSION AND LEVELS ARE TO BE CHECKED BY CONTRACTOR PRIOR TO COMMENCEMENT OF WORK. CONTRACTOR TO REPORT ANY DISCREPANCY.

DO NOT SCALE OFF PLANS

NEW DWELLING FOR
EDGE & RANDELL
LOT 8 SAMPSONS WAY
DARGAVILLE
KAIPARA

CONSENT

LEGAL DESCRIPTION
LOT NUMBER: **8**
DP NUMBER: **542244**

SITE INFORMATION
SITE AREA: **619m²**
CORROSION: **C**
DISTRICT PLAN ZONE: **RESIDENTIAL**
WIND ZONE: **HIGH**

DETAILS - FOUNDATION

JOB No: **390076**
SHEET SIZE: **A3**
SCALE: **1:10**
DRAWN: **C. LIENERT**
PUBLISHED: **23/03/2021**
SHEET: 24
CHECKED: MS

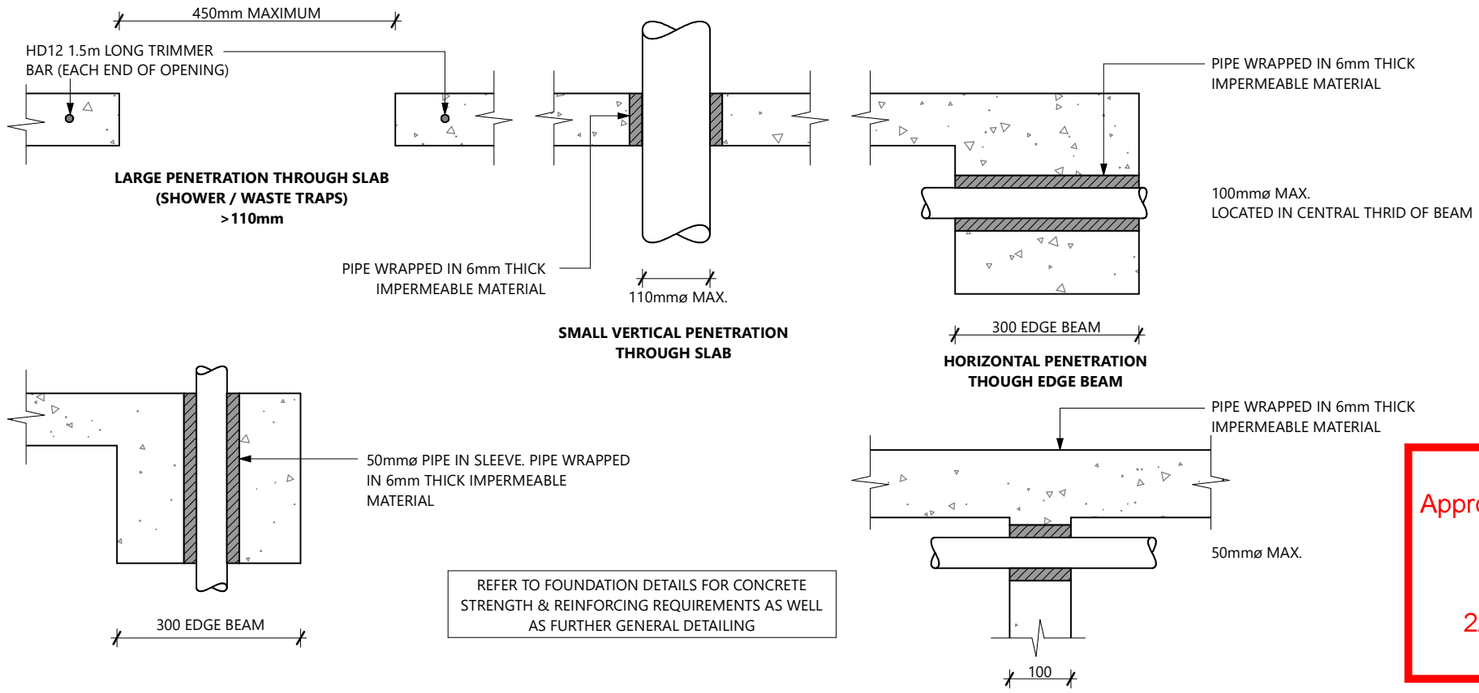

REFER TO FOUNDATION DETAILS FOR CONCRETE STRENGTH & REINFORCING REQUIREMENTS AS WELL AS FURTHER GENERAL DETAILING

SD05
25

RIBRAFT PIPE PENETRATION
1:10

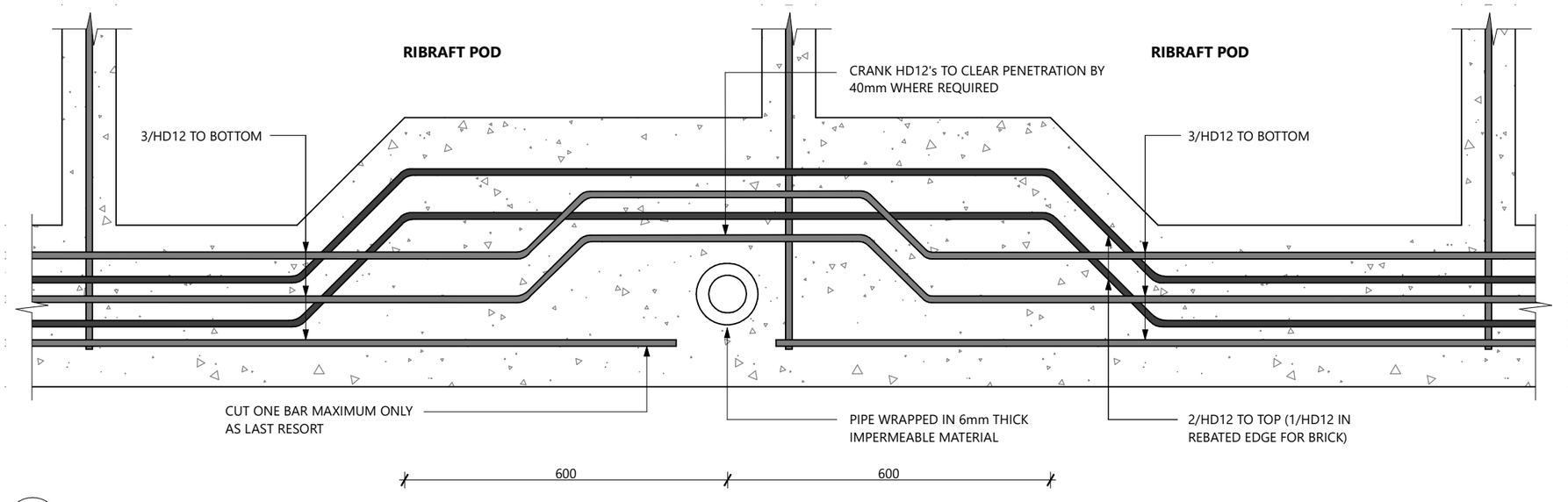

SD06
25

RIBRAFT SERVICES AT EDGE BEAM (100mmø PIPE MAX.)
1:10

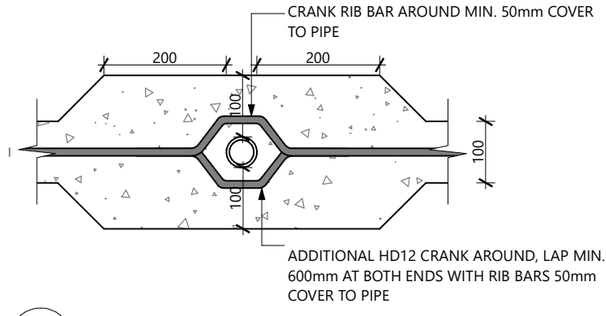

SD07
25

RIBRAFT TYPICAL DETAIL AROUND PIPE
1:10

RS Eng Ltd
Consulting Engineers
This drawing is in accordance with our calculations where applicable.
per .....
Chartered Professional Engineer

Kaipara District Council
Approved Building Consent Document
BC210208 - Pg 26 of 29
2/07/2021 ComplyNZ

G.J. Gardner. HOMES

COPYRIGHT - THIS DRAWING REMAINS THE PROPERTY OF G.J. GARDNER HOMES AND IS PROVIDED FOR THE USE DESCRIBED AND MAY NOT BE USED OR REPRODUCED IN WHOLE OR IN PART WITHOUT PERMISSION

SUDFELT CONSTRUCTION LTD
WHANGAREI / KAIPARA
FRANCHISEE FOR
G.J.GARDNER HOMES
14 PERCY STREET,
KENSINGTON
P (09) 437 5666
www.gjgardner.co.nz

ALL CONSTRUCTION TO COMPLY WITH THE LOCAL AUTHORITY REQUIREMENTS, NZ BUILDING CODE/APPROVED DOCUMENTS, AND MEANS OF COMPLIANCE, INCL. NZS3604:2011

ALL DIMENSION AND LEVELS ARE TO BE CHECKED BY CONTRACTOR PRIOR TO COMMENCEMENT OF WORK. CONTRACTOR TO REPORT ANY DISCREPANCY.

DO NOT SCALE OFF PLANS

NEW DWELLING FOR
EDGE & RANDELL
LOT 8 SAMPSONS WAY
DARGAVILLE
KAIPARA

CONSENT

LEGAL DESCRIPTION
LOT NUMBER: **8**
DP NUMBER: **542244**

SITE INFORMATION
SITE AREA: **619m²**
CORROSION: **C**
DISTRICT PLAN ZONE: **RESIDENTIAL**
WIND ZONE: **HIGH**

DETAILS - FOUNDATION

JOB No: **390076**
SHEET SIZE: **A3**
SCALE: **1:10, 1:20**
DRAWN: **C. LIENERT**
PUBLISHED: **23/03/2021**
SHEET: 25
CHECKED: MS

Kaipara District Council
Approved Building Consent Document

BC210208 - Pg 27 of 29

2/07/2021 ComplyNZ

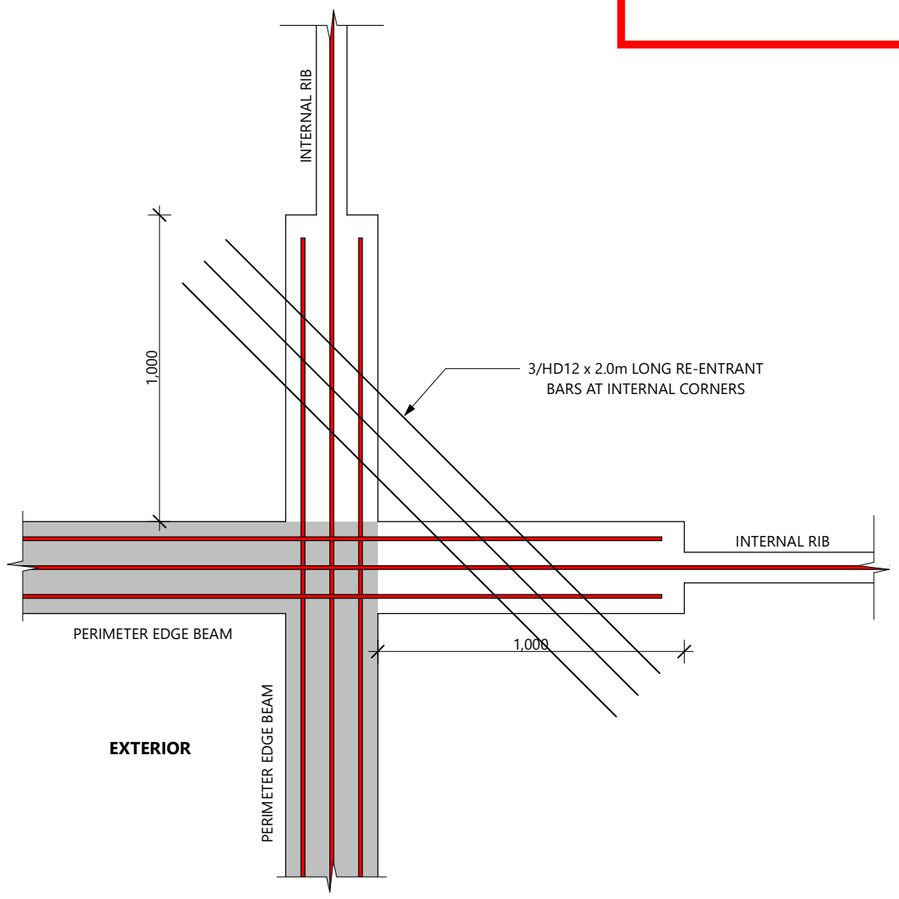

NOTE: TOP STEEL NOT SHOWN FOR CLARITY

SD08
26

TYPICAL RE-ENTRANT CORNER DETAIL
1:20

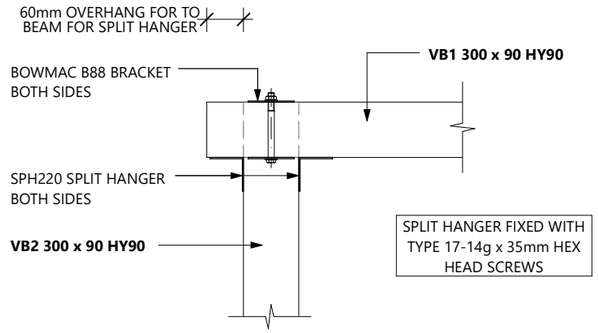

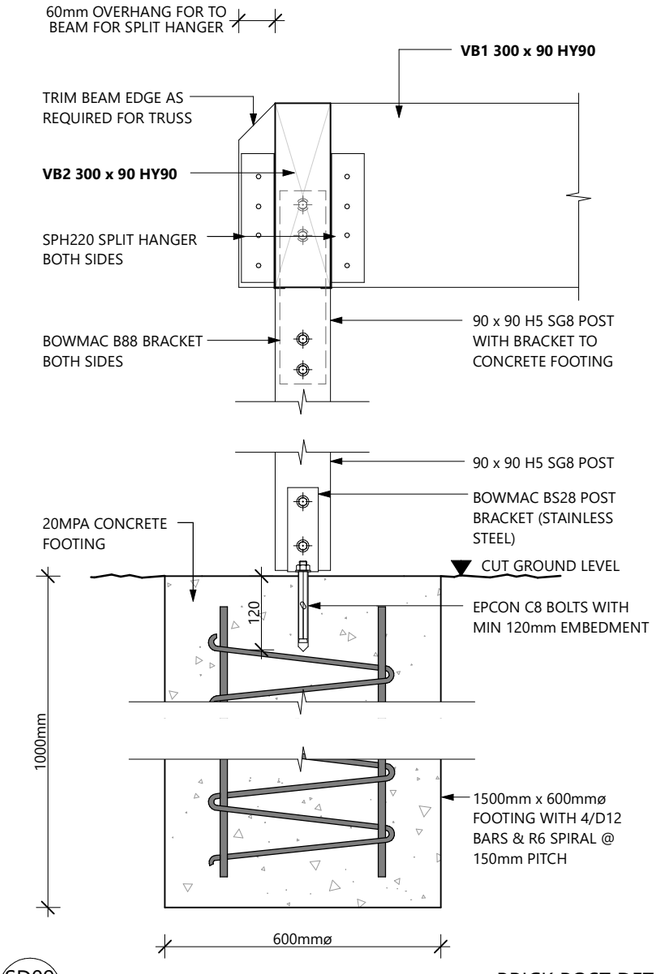

SD09
26

BRICK POST DETAIL
1:10

RS Eng Ltd
Consulting Engineers
This drawing is in accordance with our calculations where applicable.
per .....
Chartered Professional Engineer

G.J. Gardner. HOMES

COPYRIGHT - THIS DRAWING REMAINS THE PROPERTY OF G.J. GARDNER HOMES AND IS PROVIDED FOR THE USE DESCRIBED AND MAY NOT BE USED OR REPRODUCED IN WHOLE OR IN PART WITHOUT PERMISSION

SUDFELT CONSTRUCTION LTD
WHANGAREI / KAIPARA
FRANCHISEE FOR
G.J.GARDNER HOMES
14 PERCY STREET,
KENSINGTON
P (09) 437 5666
www.gjgardner.co.nz

ALL CONSTRUCTION TO COMPLY WITH THE LOCAL AUTHORITY REQUIREMENTS, NZ BUILDING CODE/APPROVED DOCUMENTS, AND MEANS OF COMPLIANCE, INCL. NZS3604:2011

ALL DIMENSION AND LEVELS ARE TO BE CHECKED BY CONTRACTOR PRIOR TO COMMENCEMENT OF WORK. CONTRACTOR TO REPORT ANY DISCREPANCY.

DO NOT SCALE OFF PLANS

NEW DWELLING FOR
EDGE & RANDELL
LOT 8 SAMPSONS WAY
DARGAVILLE
KAIPARA

CONSENT

LEGAL DESCRIPTION
LOT NUMBER: **8**
DP NUMBER: **542244**

SITE INFORMATION
SITE AREA: **619m²**
CORROSION: **C**
DISTRICT PLAN ZONE: **RESIDENTIAL**
WIND ZONE: **HIGH**

DETAILS - FOUNDATION

JOB No: **390076**
SHEET SIZE: **A3**
SCALE: **1:20, 1:10**
DRAWN: **C. LIENERT**
PUBLISHED: **23/03/2021**
SHEET: **26**
CHECKED: MS

Buildable Truss Layout

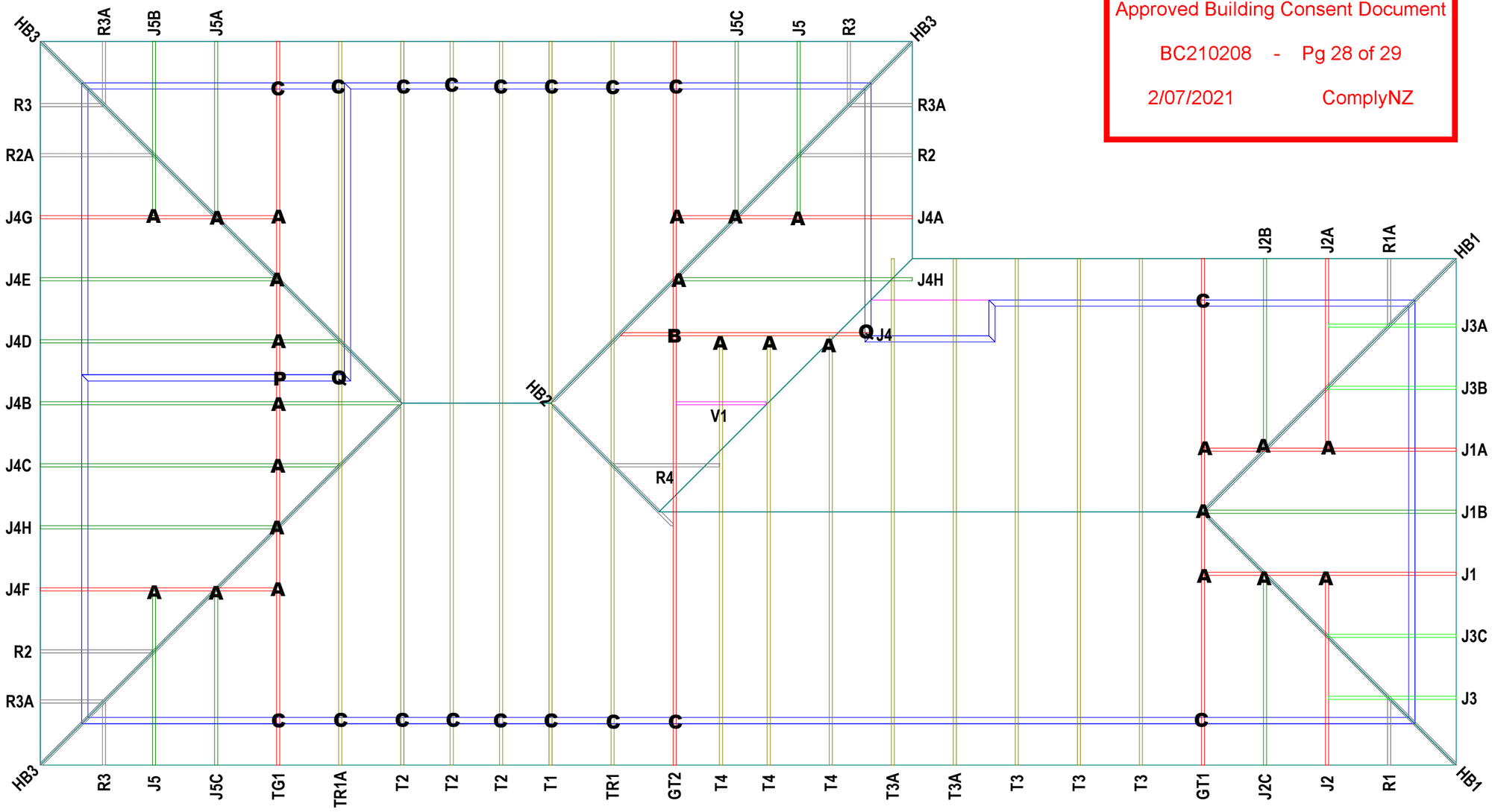

Kaipara District Council
Approved Building Consent Document

BC210208 - Pg 28 of 29

2/07/2021 ComplyNZ

W=Wire dogs for top chord to top chord connections

CARTERS

32 Commerce St
Whangarei
Ph (09) 430 7716
Fax (09) 430 7720

JOB No 334171C1

Client:	GJ Gardner (Sudfelt Const)
Job Name:	Edge
Address:	Lot 8 Sampsons Way
Pitch:	25.0deg
Roof Material:	Metal Tiles
Soffit Overhang:	600
Wind Area:	High
Ceiling:	Gib 13mm/Rondo Screwed
B/chord restraints:	600
Drawn by:	Administrator
Date :	30 Dec,2020

Trusses And Rafters At 900 Centres Unless Stated Otherwise.
This layout is to be read in conjunction with the Architectural plans.

PAGE 1 of 2

FIXINGS

Truss Fixing read inconjuction with truss hardware site pack supplied with trusses for fixing

A=47x90 JH
B=47x120 JH
C=CT200
D=47x190 JH
E=95x165 JH
S=Strut brace
G=SH-140 Split Hanger
H=SH-180 Split Hanger
K=SH-220 Split Hanger
L=6kn Strap
M=Multigrip
N=Nail On Plate
J=CPC 80
T=CPC 40 Short {Pair}
Q=9kn Pack
P=16kn
X=24kn uplift

All other truss fixings not indicated as above must have two wire dogs

NOTE

Please contact your local CARTERS Manufacturing Branch for any queries regarding this layout or if any on site remedial work is required.

No modifications to Roof Trusses or Wall Frames are to be undertaken without first obtaining written authority from CARTERS Manufacturing.

See Page 2 for Dimensions, Lintel Statement

Buildable Truss Layout

Kaipara District Council
Approved Building Consent Document

BC210208 - Pg 29 of 29

2/07/2021 ComplyNZ

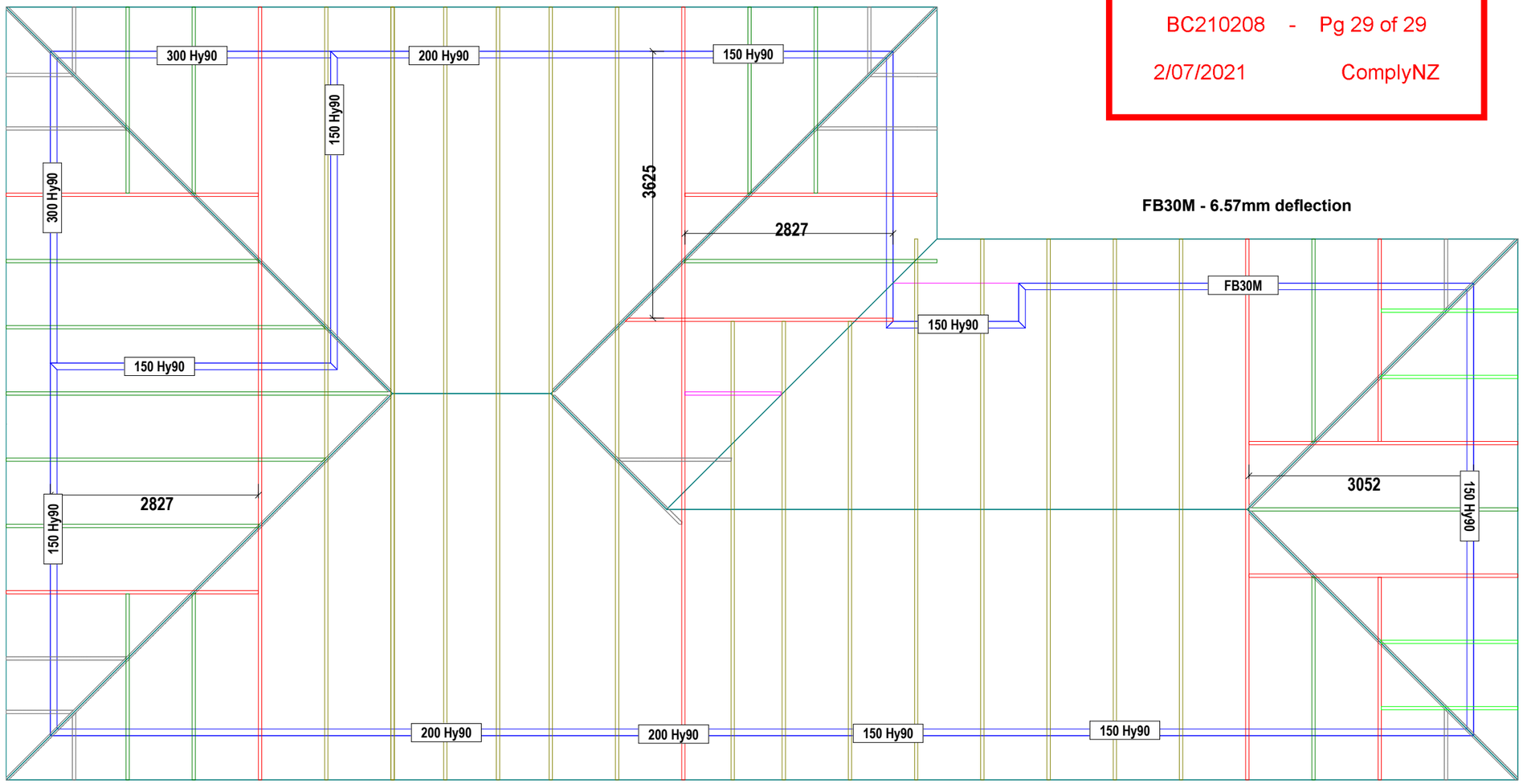

FB30M - 6.57mm deflection

NOTIFICATION OF POINT LOADS TO INTERNAL WALLS
IN EXCESS OF 10kN
Ref.Mitek structural fixings on-site guide for building code compliance
2012 edition {Revised for NZS 3604:2011}

_kn down
_kn uplift
_no of studs under truss

Internal Loadbearing wall

CARTERS

32 Commerce St
Whangarei
Ph (09) 430 7716
Fax (09) 430 7720

JOB No 334171C1

Client: GJ Gardner (Sudfelt Const)
Job Name: Edge
Address: Lot 8 Sampsons Way

Pitch:	25.0deg
Roof Material:	Metal Tiles
Soffit Overhang:	600
Wind Area:	High
Ceiling:	Gib 13mm/Rondo Screwed
B/chord restraints:	600
Drawn by:	Administrator
Date :	30 Dec,2020

Trusses And Rafters At 900 Centres Unless Stated Otherwise.
This layout is to be read in conjunction with the Architectural plans.

"Note"
if metal ceiling battens on clips are use,bottom chord restraints required @ 1800crs

PAGE 2 of 2

These lintels have been sized as per the GANGLAM 04/2008 and FLITCH BEAM V1.10 June 2011 selection manuals as provided by MiTek NZ Ltd.

HYSPAN and HY90 lintels have been sized using designIT v 6.3.5 NZ software or selection manuals, HYSPAN Edition 3 and HY90 E08/2006 as provided by CHH futurebuild.

Unless otherwise stated all lintels are to be selected as per NZS3604 2011.

All walls shown on this layout are considered to be load bearing.

See Page 1 for Truss Layout and Fixings

Date Submitted: Wednesday, 31 March 2021

Form 2
Application for project information memorandum and/or building consent

Section 33 or section 45, Building Act 2004

KDC - Approved Building Consent Document - BC210208 - Pg 1 of 16 - 2/07/2021 - ComplyNZ

The building

Street address of building:	Lot 8 Sampsons Way Dargaville
Legal description of land where building is located:	542244
Building name:	Main Building
Location of building within site/block number:	Lot 8 Sampsons Way Dargaville
Number of levels:	No information provided
Level/unit number:	No information provided
Area:	Total: 145.00 m2, Change: 145.00 m2
Current, lawfully established, use:	Level 1: 2.0 Housing: 2.0.2 Detached Dwelling has 2 occupants
Year first constructed:	2021

The owner

Name of owner:	Rachyl Edge And Regan Randell
Mailing address:	104 Te Kowhai Drive Northland 0179
Street address/registered office:	No information provided
Phone number:	Landline: 094375666 Mobile: N/A
Daytime:	Landline: 094375666 Mobile: N/A
After hours:	Landline: 094375666 Mobile: N/A
Facsimile number:	No information provided
Email address:	rachyledge@gmail.com
Website:	No information provided

The following evidence of ownership is attached to this application:

1. 912640_Title_Search_Copy_cheaptitles.co.nz.pdf (310.64K)

KDC - Approved Building Consent Document - BC210208 - Pg 2 of 16 - 2/07/2021 - ComplyNZ

Agent

Name of agent:	Genna Jones			
Mailing address:	Po Box 8046 Kensington 0145			
Street address/registered office:	Po Box 8046 Kensington			
Phone number:	Landline:	094375666	Mobile:	094375666
Daytime:	Landline:	094375666	Mobile:	094375666
After hours:	Landline:	094375666	Mobile:	094375666
Facsimile number:	No information provided			
Email address:	genna.jones@gjgardner.co.nz			
Website:	No information provided			
Relationship to owner:	Application made on owners behalf			

First point of contact for communications with the council/building consent authority:

Full name:	Genna Jones
Mailing address:	Po Box 8046 Kensington Whanagrei 0145
Phone number(s):	094375666
Facsimile number(s):	N/A
Email address(es):	genna.jones@gjgardner.co.nz

Application

I request that you issue a building consent for the building work described in this application.

Signature of agent on behalf of and with the authority of the owner:

JUILEANNE MOLLET

Date: 31 Mar 2021

space for council use

Application Type	Building Consent only
Reference Key:	78714207BP
Name:	Genna Jones
Application Role:	Agent

The project

Description of the building work:

Construct 3 Bedroom Dwelling with Attached Garage

Will the building work result in a change of use of the building?	No
Intended life of the building if less than 50 years:	50 years
List building consents previously issued for this project (if any):	No information provided
Estimated value of the building work on which the building levy will be calculated (including goods and services tax):	$349,000

Restricted building work

Will the building work include any restricted building work? Yes

If Yes, provide the following details of all licensed building practitioners who will be involved in carrying out or supervising the restricted building work:

Name	Steven Turner
Licensing class	Design
Licensed building practitioner number (or registration number if treated as being licensed under section 291 of Act)	87465

Name	Conrad Lienert
Licensing class	Design
Licensed building practitioner number (or registration number if treated as being licensed under section 291 of Act)	BP113635

Building consent

The following plans and specifications are attached to this application:

1. Plans.pdf (9.08M)
2. SPECIFICATION_-EDGE_RANDELL.pdf (18.26M)

The building work will comply with the building code as follows:

Main Building

B1 - Structure	AS1
B2 - Durability	AS1
C1 - C6 - Protection from Fire (current)	AS1
D1 - Access Routes	AS1

KDC - Approved Building Consent Document - BC210208 - Pg 3 of 16 - 2/07/2021 - ComplyNZ

E1 - Surface Water	AS1
E2 - External Moisture	AS1
E3 - Internal Moisture	AS1
F2 - Hazardous Building Materials	AS1
F5 - Construction and Demolition Hazards	AS1
G1 - Personal Hygiene	AS1
G2 - Laundering	AS1
G3 - Food Preparation	AS1
G4 - Ventilation	AS1
G5 - Interior Environment	AS1
G7 - Natural Light	AS1
G8 - Artificial Light	AS1
G9 - Electricity	AS1
G12 - Water Supplies	AS1
G13 - Foul Water	AS3
H1 - Energy Efficiency	AS1
Waiver / Modification Required:	N/A

KDC - Approved Building Consent Document - BC210208 - Pg 4 of 16 - 2/07/2021 - ComplyNZ

Compliance schedule

There are no specified systems in the building.

Attachments

The following documents are attached to this application:

Plans and specifications

1. Plans.pdf (9.08M)
2. SPECIFICATION_-EDGE_RANDELL.pdf (18.26M)

Record of title

1. 912640_Title_Search_Copy_cheaptitles.co.nz.pdf (310.64K)

Restricted building work memorandums / Owner-builder declaration

1. 17644_BC_Documents_2021-03-29.pdf (1.01M)
2. EDGE_RANDELL_LBP_MEMO.pdf (153.99K)

Supporting documents

1. Consent_Notice.pdf (489.00K)
2. H1_ENERGY_EFFICIENCY_-_EDGE_RANDELL.pdf (463.26K)
3. Edge_KDC_Vehicle_Crossing_Application.pdf (274.00K)

4. Report_-_Site_Suitability.pdf (15.48M)
5. Edge_Randell_-_Truss_Design.pdf (1.83M)
6. Edge_Water_Meter_Application.pdf (289.80K)

Approvals from other authorities

1. Edge_Authorisation.pdf (294.79K)

KDC - Approved Building Consent Document - BC210208 - Pg 5 of 16 - 2/07/2021 - ComplyNZ

Building Consent Application: 78714207BP

Date Submitted: Wednesday, 31 March 2021

KDC - Approved Building Consent Document - BC210208 - Pg 6 of 16 - 2/07/2021 - ComplyNZ

FORM PLG 1

National Environmental Standard (NES) for Assessing and Managing Contaminants in Soil to Protect Human Health

For assistance in answering these questions please refer to (PLG 1A)

Please note that any inaccuracies may result in the applicant being in breach of the Resource Management Act 1991 and/or exposed to liability if the site is subsequently found to be contaminated, including being liable for remedial works.

Is the building work and all associated activities:

Changing the use of the land? **YES**

(Please note that "changing the use of the land" includes erecting a dwelling on an area of land which previously had no dwelling erected upon it.)

Disturbing soil? **NO**

(more than 25m3 per 500m2 of land) or removing soil? (more than 5m3 per 500m2 of land) (e.g.: foundations, on-site effluent treatment and disposal systems, wells or bores)

Is the land currently being used, has been used in the past, or is likely to have been used for an activity described on the HAIL?

NO

For more information on this process please contact the Duty Planner on 09 439 3123 or go the Ministry for the Environment website: http://www.mfe.govt.nz/laws/standards/contaminants-in-soil/

KAIPARA DISTRICT
Kaipara te Oranganui • Two Oceans Two Harbours

KDC - Approved Building Consent Document - BC210208 - Pg 7 of 16 - 2/07/2021 - ComplyNZ

Signature

The name below as AGENT has the authority for the application to proceed to processing and accept the associated charges.

Signed By:

Juileanne Mollet

31 Mar 2021

The Agent will be the first point of contact for communications with the Council/Building Consent authority regarding this application / building work and will receive all correspondence including all invoices.

RECORD OF TITLE
UNDER LAND TRANSFER ACT 2017
FREEHOLD

Search Copy

R.W. Muir
Registrar-General
of Land

KDC - Approved Building Consent Document - BC210208 - Pg 8 of 16 - 2/07/2021 - ComplyNZ

Identifier **912640**

Land Registration District **North Auckland**

Date Issued 05 June 2020

Prior References
NA62D/391

Estate Fee Simple

Area 619 square metres more or less

Legal Description Lot 8 Deposited Plan 542244

Registered Owners
Regan John Randell and Rachyl Irene Edge

Interests

11765180.3 Consent Notice pursuant to Section 221 Resource Management Act 1991 - 5.6.2020 at 12:20 pm

Land Covenant in Covenant Instrument 11765180.4 - 5.6.2020 at 12:20 pm

Appurtenant hereto is a right of way, a right to convey electricity, telecommunications and water and a right to drain water and sewage created by Easement Instrument 11765180.7 - 5.6.2020 at 12:20 pm

The easements created by Easement Instrument 11765180.7 are subject to Section 243 (a) Resource Management Act 1991

11959861.2 Mortgage to ASB Bank Limited - 21.12.2020 at 1:26 pm

Identifier **912640**

KDC - Approved Building Consent Document - BC210208 - Pg 9 of 16 - 2/07/2021 - ComplyNZ

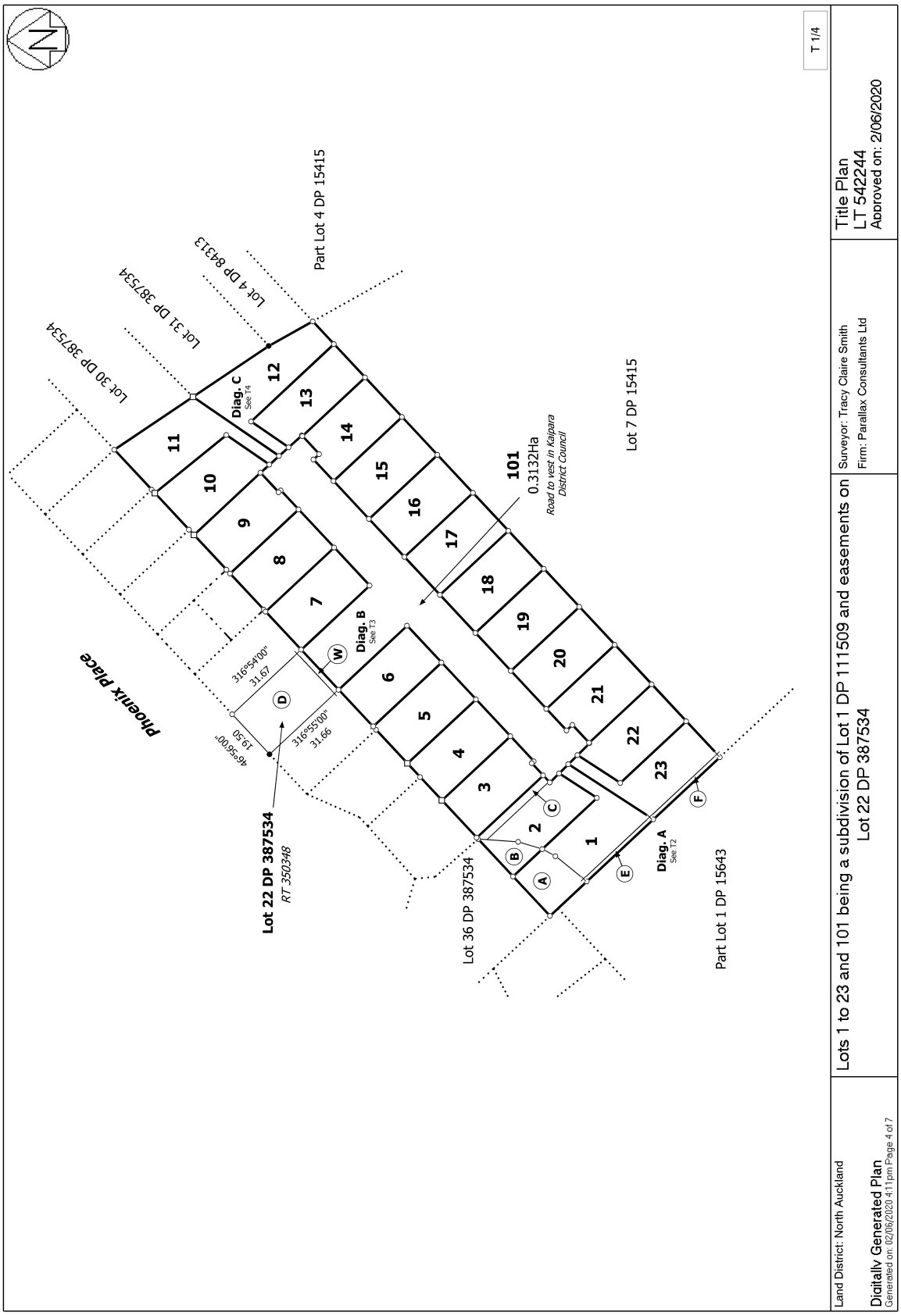

Identifier **912640**

KDC - Approved Building Consent Document - BC210208 - Pg 10 of 16 - 2/07/2021 - ComplyNZ

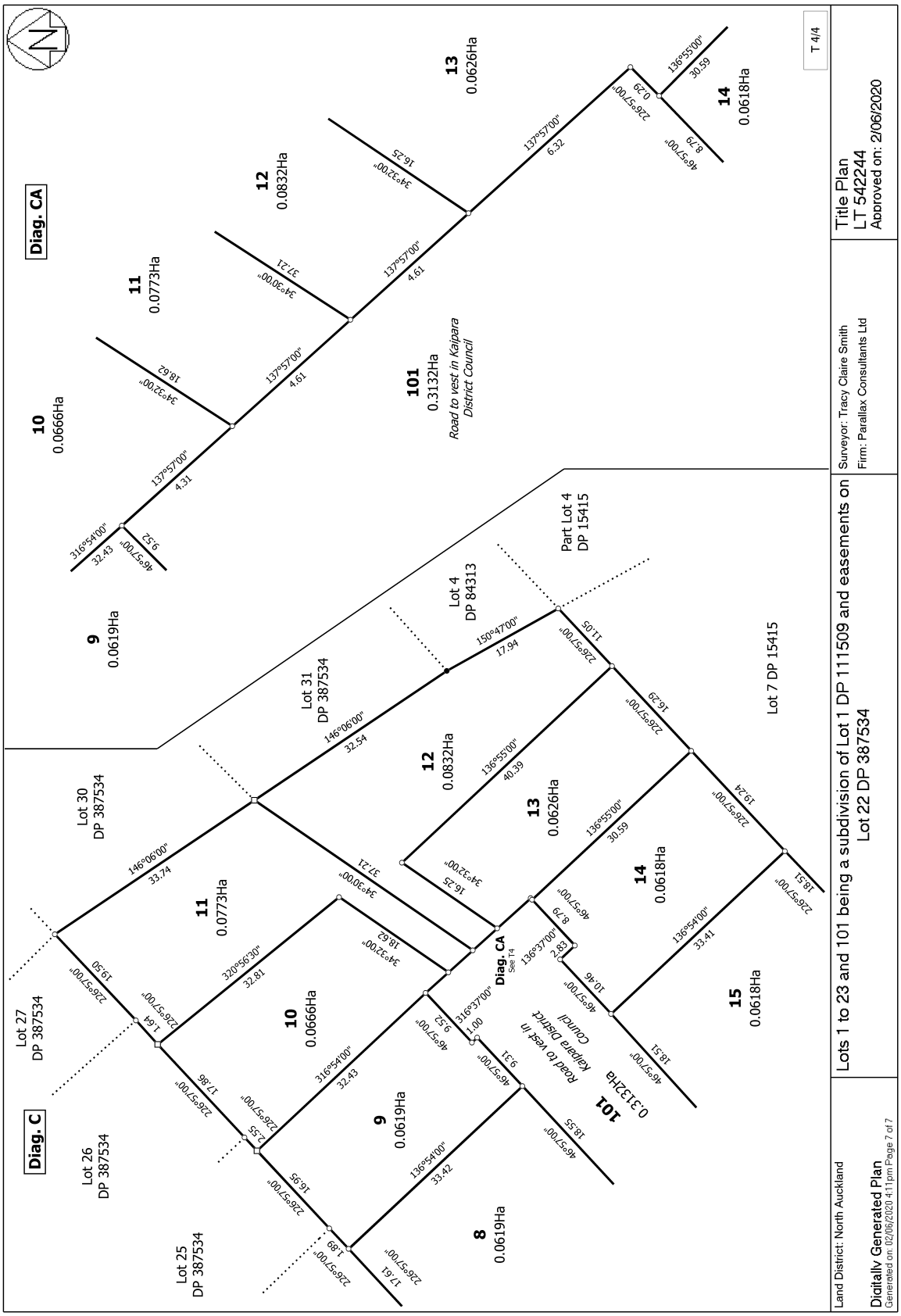

Landonline

View Instrument Details

Toitū te Land whenua Information New Zealand

Instrument No.	11765180.3
Status	Registered
Date & Time Lodged	05 Jun 2020 12:20
Lodged By	Dempster, Vicki Marie
Instrument Type	Consent Notice under s221(4)(a) Resource Management Act 1991

Affected Records of Title	Land District
912633	North Auckland
912634	North Auckland
912635	North Auckland
912636	North Auckland
912637	North Auckland
912638	North Auckland
912639	North Auckland
912640	North Auckland
912641	North Auckland
912642	North Auckland
912643	North Auckland
912644	North Auckland
912645	North Auckland
912646	North Auckland
912647	North Auckland
912648	North Auckland
912649	North Auckland
912650	North Auckland
912651	North Auckland
912652	North Auckland
912653	North Auckland
912654	North Auckland
912655	North Auckland

Annexure Schedule Contains 3 Pages.

Signature

Signed by Vicki Marie Dempster as Territorial Authority Representative on 04/06/2020 09:57 AM

***** End of Report *****

KDC - Approved Building Consent Document - BC210208 - Pg 11 of 16 - 2/07/2021 - CompliNZ

KDC - Approved Building Consent Document - BC210208 - Pg 12 of 16 - 2/07/2021 - ComplyNZ

IN THE MATTER of the Resource Management Act 1991 ("**Act**")

AND

IN THE MATTER of the subdivision of land shown in Deposited Plan 542244 (North Auckland Registry) ("**Plan**")

CONSENT NOTICE
(Section 221 of the Act)

KAIPARA DISTRICT COUNCIL ("**Council**") being the territorial authority of the district within which the land described in the First Schedule below ("**Land**") is located has consented to the subdivision of the Land as shown in the Plan subject to the conditions of the Second Schedule below to be complied with on a continuing basis by the Owner (as defined in the Act).

FIRST SCHEDULE
(Land)

ALL the land being Lot 22 Deposited Plan 387534 comprised in Identifier 350348 and Lot 1 Deposited Plan 111609 comprised in Identifier NA62D/391.

SECOND SCHEDULE
(Conditions)

The Owner (as defined in the Act) must, on a continuing basis, to the satisfaction of the Council, comply with the following conditions of the Council's Subdivision Consent RM180003A, namely:

1. In respect of all lots 1 to 23 (inclusive) on the Plan:

✓1.1 Earthworks, the location of buildings, building foundations and storm water to be subject to specific engineering design by a suitably qualified Chartered Professional Engineer having regard to any soil instability/saturation issues that may exist or arise as a result of the development. Design should take into account any of the recommendations identified in the Geotechnical Investigation and Engineering Report (Reference 11546), dated 27 August 2018, prepared by Hawthorn Geddes.

KDC - Approved Building Consent Document - BC210208 - Pg 13 of 16 - 2/07/2021 - ComplyNZ

1.2 Each lot will require specific foundation design at Building Consent stage to ensure that future dwellings are designed and constructed with due accordance paid to the highly sensitive nature of the sub soils present on the site.

1.3 No vehicle crossing(s) is provided to the lots. All lots must form a complying vehicle crossing consistent with the Kaipara District Council Engineering Standard 2011 at the time of the construction of a dwelling. Prior to commencement of any construction work, in relation to vehicle crossings, the owner(s) shall have a vehicle crossing permit for each lot and shall enter into a Bond in a form to the approval of Council guaranteeing that in the event of damage to existing Council assets or abandonment of the work by the consent holder, that all existing Council assets will be returned to a condition at least equal to that which existed prior to the commencement of work. The bond shall be for the sum of $5,000 and shall remain in full force and effect until such time as all work has been completed and any necessary remedial work completed to the satisfaction of Council

2. In respect of Lots 1 and 12 to 23 (inclusive) on the Plan (each a "Lot"):

2.1 The owner(s) shall not and nor shall any occupier of or visitor to the Lot make, and surrenders the right to make, a complaint to the relevant consent authority or the Environment Court, as to any reverse sensitivity effects, including any emission of noise, vibration or any effect associated with any activity which is expressly allowed by a rule in a regional or District Plan, a resource consent, a designation, or regulations made under the Resource Management Act 1991 ('RMA') and shall not seek that a declaration or enforcement order be made by the Environment Court under sections 311 or 316 of the RMA, nor seek that an abatement or infringement notice be served by a duly authorised enforcement officer under sections 322 or 343C of the RMA, or that criminal proceedings be commenced in the District Court by the relevant consent authority under section 338 of the RMA in respect of any lawful activity carried out by the Dargaville High School; (Lot 7 DP 15415; Lot 1 DP 28811; Lot 4 DP 36061; PT Lot 13 DP 14511; PT Lot 8 DP 15415; PT Lot 1 DP 1 5643).

2.2 The owner of a Lot shall not be a party to, finance or contribute to the costs of any complaint, application for other proceedings or process specified in condition 2.1 above.

2.3 Any future dwelling shall have double glazing on all habitable room windows located on the south eastern and south western sides of the dwelling (the sides of the dwelling facing the

Dargaville High School property, being Lot 7 DP 15415; Lot 1 DP 28611; Lot 4 DP 36061; PT Lot 13 DP 14511; PT Lot 8 DP 15415; PT Lot 1 DP 1 5643).

2.4 Screening shall be undertaken that consists of a 1.8m high solid fence or a minimum 1.8m high planting, of no less than 1 metre depth along the west and south eastern boundary bordering the Dargaville High School property (being Lot 7 DP 15415; Lot 1 DP 28611; Lot 4 DP 36061; PT Lot 13 DP 14511; PT Lot 8 DP 15415; PT Lot 1 DP 1 5643).

DATED the 5th day of May 2020

SIGNED by the Council
by its authorised signatory

Dina Tetzner

KDC - Approved Building Consent Document - BC210208 - Pg 14 of 16 - 2/07/2021 - ComplyNZ

View Instrument Details

Instrument No.	11765180.4
Status	Registered
Date & Time Lodged	05 Jun 2020 12:20
Lodged By	Dempster, Vicki Marie
Instrument Type	Land Covenant under s116(1)(a) or (b) Land Transfer Act 2017

Affected Records of Title	Land District
912633	North Auckland
912634	North Auckland
912635	North Auckland
912636	North Auckland
912637	North Auckland
912638	North Auckland
912639	North Auckland
912640	North Auckland
912641	North Auckland
912642	North Auckland
912643	North Auckland
912644	North Auckland
912645	North Auckland
912646	North Auckland
912647	North Auckland
912648	North Auckland
912649	North Auckland
912650	North Auckland
912651	North Auckland
912652	North Auckland
912653	North Auckland
912654	North Auckland
912655	North Auckland

Annexure Schedule Contains 6 Pages.

Covenantor Certifications

I certify that I have the authority to act for the Covenantor and that the party has the legal capacity to authorise me to lodge this instrument ☑

I certify that I have taken reasonable steps to confirm the identity of the person who gave me authority to lodge this instrument ☑

I certify that any statutory provisions specified by the Registrar for this class of instrument have been complied with or do not apply ☑

I certify that I hold evidence showing the truth of the certifications I have given and will retain that evidence for the prescribed period ☑

Signature

Signed by Vicki Marie Dempster as Covenantor Representative on 04/06/2020 09:42 AM

Covenantee Certifications

I certify that I have the authority to act for the Covenantee and that the party has the legal capacity to authorise me to lodge this instrument ☑

KDC - Approved Building Consent Document - BC210208 - Pg 15 of 16 - 2/07/2021 - ComplyNZ

I certify that I have taken reasonable steps to confirm the identity of the person who gave me authority to lodge this instrument ☑

I certify that any statutory provisions specified by the Registrar for this class of instrument have been complied with or do not apply ☑

I certify that I hold evidence showing the truth of the certifications I have given and will retain that evidence for the prescribed period ☑

Signature

Signed by Vicki Marie Dempster as Covenantee Representative on 04/06/2020 09:42 AM

***** End of Report *****

KDC - Approved Building Consent Document - BC210208 - Pg 16 of 16 - 2/07/2021 - ComplyNZ

21 July 2021

Rachyl Edge and Regan Randell
104 Te Kowhai Drive
Maungatapere 0179

Dear Sir or Madam,

Reference Number: BC210208
Project Location: 8 Sampsons Way

Dargaville
Legal description of land where building is located: Lot 8 DP 542244
Project Description: Construct 3 Bedroom Dwelling with Attached Garage
IR Number: 1

Inspection Results:
WASTEPIPES - 21 Jul 2021 @ 15:02 by Steve Corkin

Inspection Outcome: INCOMPLETE - Some aspects of the building work pertaining to this inspection have yet to be checked and confirmed as complying with the building consent.

Inspection Summary: No inspection carried out as no underslab plumbing was started

Your next inspection will be: **Wastepipes**
Please contact us 48 hours before you require this to book your inspection.

Outstanding Required Documents for this Building
Prepour

- B1: Foundations - Construction Monitoring Records PS4 - CPEng To Inspect Foundations Prior To Concrete Pour.

Floor Slab

- B1: Slab And Perimeter Subsoil Drainage - Construction Monitoring Records PS4

Drainage

- E1: Stormwater Drain As-built Plans
- G13: As-builts Drainlayer Details.

Final

- B1: Truss certification
- G9: Energy works certificate

History

Inspection Name	Summary
Siting and Site Scrape Inspection	-
Prepour	-
Wastepipes	IN-PROGRESS - 21 Jul 2021
Floor Slab	-
Framing / Pre-wrap	-
Post Wrap / Cavity	-
Deck / Roof membrane	-
Half High Brick	-
Preline	-
Post Line	-
Drainage	-
Final	-

Yours Sincerely,

Steve Corkin
Building Services Officer
On behalf of: Kaipara District Council

04 August 2021

Rachyl Edge and Regan Randell
104 Te Kowhai Drive
Maungatapere 0179

Dear Sir or Madam,

Reference Number: BC210208
Project Location: 8 Sampsons Way

Dargaville
Legal description of land where building is located: Lot 8 DP 542244
Project Description: Construct 3 Bedroom Dwelling with Attached Garage
IR Number: 2

Inspection Results:
WASTEPIPES - 04 Aug 2021 @ 16:53 by John Dowden

Inspection Outcome: PASS - The BCA is satisfied, on reasonable grounds, that the aspects of building work pertaining to this inspection demonstrate compliance with the building consent.

Inspection Summary: Under Slab Waste Pipe Inspection. Certified Plumber is Martin Crowe. Pipe work is laid to AS / NZS 3500 .2. Pipe work is laid with good falls and is well supported in gap 7 fines. Through slab separation sleeving installed. Lines are under flood test. Under slab as built viewed and photographed on site. Okay to back fill and continue.

Your next inspection will be: **Floor Slab**
Please contact us 48 hours before you require this to book your inspection.

Outstanding Required Documents for this Building
Prepour

- B1: Foundations - Construction Monitoring Records PS4 - CPEng To Inspect Foundations Prior To Concrete Pour.

Floor Slab

- B1: Slab And Perimeter Subsoil Drainage - Construction Monitoring Records PS4

Drainage

- E1: Stormwater Drain As-built Plans
- G13: As-builts Drainlayer Details.

Final

- B1: Truss certification
- G9: Energy works certificate

History

Inspection Name	Summary
Siting and Site Scrape Inspection	-
Prepour	-
Wastepipes	**PASS** - 04 Aug 2021
Floor Slab	-
Framing / Pre-wrap	-
Post Wrap / Cavity	-
Deck / Roof membrane	-
Half High Brick	-
Preline	-
Post Line	-
Drainage	-
Final	-

Yours Sincerely,

John Dowden
Building Services Officer
On behalf of: Kaipara District Council

09 August 2021

Rachyl Edge and Regan Randell
104 Te Kowhai Drive
Maungatapere 0179

Dear Sir or Madam,

Reference Number: BC210208
Project Location: 8 Sampsons Way

Dargaville
Legal description of land where building is located: Lot 8 DP 542244
Project Description: Construct 3 Bedroom Dwelling with Attached Garage
IR Number: 3

Inspection Results:
SITING AND SITE SCRAPE INSPECTION - 09 Aug 2021 @ 12:12 by John Dowden

Inspection Outcome: PASS - The BCA is satisfied, on reasonable grounds, that the aspects of building work pertaining to this inspection demonstrate compliance with the building consent.

PREPOUR - 09 Aug 2021 @ 12:12 by John Dowden

Inspection Outcome: PASS - The BCA is satisfied, on reasonable grounds, that the aspects of building work pertaining to this inspection demonstrate compliance with the building consent.

FLOOR SLAB - 09 Aug 2021 @ 12:12 by John Dowden

Inspection Outcome: FAIL- The following aspects of this inspection have resulted in a Fail result -- see the item(s) below:

Required Docs:
Geotech Site cut & Compaction , Structural CPEng floor slab inspection notes. LBP floor slab ROW to be uploaded via the consent portal.

These may be viewed at time of next inspection.

Inspection Summary: Pre Pour Floor Slab Inspection. GJ Gardener Homes. LBP Foundations is Aaron Bates. Raft floor slab foundation on a compacted metal base with DPM over. 300 x 300 mm perimeter thickening, with 3 x HD 12 bottom bars and 1 x HD 12 top bar typical. Garage entry thickening is 400 mm wide with 3 x HD 12 bottom bars and 2 x HD 12 top bars. Polystyrene pods are located @ 1100 mm C's with HD 12 bars EW @ 1200 mm C's. SE 62 mesh on chairs, corner re entry bars are in place, cover is good. Please ensure site cut and compaction and Structural CPEng inspection notes are up loaded to the consent portal prior to placement of concrete.

Your next inspection will be: **Framing / Pre-wrap**
Please contact us 48 hours before you require this to book your inspection.

Outstanding Required Documents for this Building
Prepour

- B1: Foundations - Construction Monitoring Records PS4 - CPEng To Inspect Foundations Prior To Concrete Pour.

Floor Slab

- B1: Slab And Perimeter Subsoil Drainage - Construction Monitoring Records PS4

Drainage

- E1: Stormwater Drain As-built Plans
- G13: As-builts Drainlayer Details.

Final

- B1: Truss certification
- G9: Energy works certificate

History

Inspection Name	**Summary**
Siting and Site Scrape Inspection	**PASS** - 09 Aug 2021
Prepour	**PASS** - 09 Aug 2021
Wastepipes	**PASS** - 04 Aug 2021
Floor Slab	**FAIL** - 09 Aug 2021
	View at next inspection
Framing / Pre-wrap	-
Post Wrap / Cavity	-
Deck / Roof membrane	-
Half High Brick	-
Preline	-

Post Line	-
Drainage	-
Final	-

Yours Sincerely,

John Dowden
Building Services Officer
On behalf of: Kaipara District Council

07 October 2021

Rachyl Edge and Regan Randell
104 Te Kowhai Drive
Maungatapere 0179

Dear Sir or Madam,

Reference Number: BC210208
Project Location: 8 Sampsons Way

Dargaville
Legal description of land where building is located: Lot 8 DP 542244
Project Description: Construct 3 Bedroom Dwelling with Attached Garage
IR Number: 4

Inspection Results:
FLOOR SLAB - 07 Oct 2021 @ 11:47 by Greg Bellam

Inspection Outcome: PASS - The BCA is satisfied, on reasonable grounds, that the aspects of building work pertaining to this inspection demonstrate compliance with the building consent.

FRAMING / PRE-WRAP - 07 Oct 2021 @ 11:47 by Greg Bellam

Inspection Outcome: **PASS** - The BCA is satisfied, on reasonable grounds, that the aspects of building work pertaining to this inspection demonstrate compliance with the building consent.

Inspection Summary: Framing completed as per consented plans. Top plate/bottom plate to stud connections all completed. Lintel to stud fixings in place. Bottom plate to slab fixings in place, including all brace fixings. Ply braces fixed at 150mm centers. Okay to wrap. Due to rain could not photo

Your next inspection will be: **Post Wrap / Cavity**
Please contact us 48 hours before you require this to book your inspection.

Outstanding Required Documents for this Building
Prepour

- B1: Foundations - Construction Monitoring Records PS4 - CPEng To Inspect Foundations Prior To Concrete Pour.

Floor Slab

- B1: Slab And Perimeter Subsoil Drainage - Construction Monitoring Records PS4

Drainage

- E1: Stormwater Drain As-built Plans
- G13: As-builts Drainlayer Details.

Final

- B1: Truss certification
- G9: Energy works certificate

History

Inspection Name	Summary
Siting and Site Scrape Inspection	**PASS** - 09 Aug 2021
Prepour	**PASS** - 09 Aug 2021
Wastepipes	**PASS** - 04 Aug 2021
Floor Slab	**PASS** - 07 Oct 2021
Framing / Pre-wrap	**PASS** - 07 Oct 2021
Post Wrap / Cavity	-
Deck / Roof membrane	-
Half High Brick	-
Preline	-
Post Line	-
Drainage	-
Final	-

Yours Sincerely,

Greg Bellam
Senior Building Services Officer
On behalf of: Kaipara District Council

01 November 2021

Rachyl Edge and Regan Randell
104 Te Kowhai Drive
Maungatapere 0179

Dear Sir or Madam,

Reference Number: BC210208
Project Location: 8 Sampsons Way

Dargaville
Legal description of land where building is located: Lot 8 DP 542244
Project Description: Construct 3 Bedroom Dwelling with Attached Garage
IR Number: 5

Inspection Results:
POST WRAP / CAVITY - 01 Nov 2021 @ 12:16 by John Dowden

Inspection Outcome: PASS - The BCA is satisfied, on reasonable grounds, that the aspects of building work pertaining to this inspection demonstrate compliance with the building consent.

Inspection Summary: Post Wrap & Cavity Inspection. LBP Builder Travis Lines on site. Building is wrapped in TEKTON wrap Blue band tape in place. Cladding is brick veneer with JH weather boards on H3.2 cavity battens over the Gable end. Super course is in place adjacent windows an d door openings. Kick out battens in place. Brick rebate has been sealed. Windows and doors installed full height to soffit. Support bars in place. Cavity closers and tape seals installed. Marshall seals installed over penetrations. Okay to continue.

Your next inspection will be: **Half High Brick**
Please contact us 48 hours before you require this to book your inspection.

Outstanding Required Documents for this Building
Prepour

- B1: Foundations - Construction Monitoring Records PS4 - CPEng To Inspect Foundations Prior To Concrete Pour.

Floor Slab

- B1: Slab And Perimeter Subsoil Drainage - Construction Monitoring Records PS4

Drainage

- E1: Stormwater Drain As-built Plans
- G13: As-builts Drainlayer Details.

Final

- B1: Truss certification
- G9: Energy works certificate

History

Inspection Name	Summary
Siting and Site Scrape Inspection	**PASS** - 09 Aug 2021
Prepour	**PASS** - 09 Aug 2021
Wastepipes	**PASS** - 04 Aug 2021
Floor Slab	**PASS** - 07 Oct 2021
Framing / Pre-wrap	**PASS** - 07 Oct 2021
Post Wrap / Cavity	**PASS** - 01 Nov 2021
Deck / Roof membrane	-
Half High Brick	-
Preline	-
Post Line	-
Drainage	-
Final	-

Yours Sincerely,

John Dowden
Building Services Officer
On behalf of: Kaipara District Council

10 November 2021

Rachyl Edge and Regan Randell
104 Te Kowhai Drive
Maungatapere 0179

Dear Sir or Madam,

Reference Number: BC210208
Project Location: 8 Sampsons Way

Dargaville
Legal description of land where building is located: Lot 8 DP 542244
Project Description: Construct 3 Bedroom Dwelling with Attached Garage
IR Number: 6

Inspection Results:
DRAINAGE - 10 Nov 2021 @ 12:40 by John Dowden

Inspection Outcome: **FAIL**- The following aspects of this inspection have resulted in a Fail result -- see the item(s) below:

Required Docs:
Please provide an As Built Drainage Plan

These may be viewed at time of next inspection.

Inspection Summary: Drainage Inspection. Certified Drain Layer is Derek Hulse. Dain Layer Joel on site. Sub soil ring drain installed around site perimeter as per plan. Sleeved nova coil and gap 7 drainage metal piped to public connection. Storm water line piped from dropper locations and connected to public system. Sanitary sewer line is piped from under slab stack location to E 1 grinder then PE line to boundary kit connection. ORG and inspection points in place. Lines are laid with good falls, are well supported in gap 7 drainage metal and are under flood test. Drive way cess pit pipe work installed. Please provide an as built drainage plan this to be uploaded to the Alpha Portal. Okay to backfill and continue.

Your next inspection will be: **Half High Brick**
Please contact us 48 hours before you require this to book your inspection.

Outstanding Required Documents for this Building
Prepour

- B1: Foundations - Construction Monitoring Records PS4 - CPEng To Inspect Foundations Prior To Concrete Pour.

Floor Slab

- B1: Slab And Perimeter Subsoil Drainage - Construction Monitoring Records PS4

Drainage

- E1: Stormwater Drain As-built Plans
- G13: As-builts Drainlayer Details.

Final

- B1: Truss certification
- G9: Energy works certificate

History

Inspection Name	**Summary**
Siting and Site Scrape Inspection	**PASS** - 09 Aug 2021
Prepour	**PASS** - 09 Aug 2021
Wastepipes	**PASS** - 04 Aug 2021
Floor Slab	**PASS** - 07 Oct 2021
Framing / Pre-wrap	**PASS** - 07 Oct 2021
Post Wrap / Cavity	**PASS** - 01 Nov 2021
Deck / Roof membrane	-
Half High Brick	-
Preline	-
Post Line	-
Drainage	**FAIL** - 10 Nov 2021 **View at next inspection**
Final	-

Yours Sincerely,

John Dowden
Building Services Officer
On behalf of: Kaipara District Council

02 December 2021

Rachyl Edge and Regan Randell
104 Te Kowhai Drive
Maungatapere 0179

Dear Sir or Madam,

Reference Number: BC210208
Project Location: 8 Sampsons Way

Dargaville
Legal description of land where building is located: Lot 8 DP 542244
Project Description: Construct 3 Bedroom Dwelling with Attached Garage
IR Number: 7

Inspection Results:
SITING AND SITE SCRAPE INSPECTION - 09 Aug 2021 @ 11:52 by John Dowden

Inspection Outcome: PASS - The BCA is satisfied, on reasonable grounds, that the aspects of building work pertaining to this inspection demonstrate compliance with the building consent.

PREPOUR - 09 Aug 2021 @ 11:48 by John Dowden

Inspection Outcome: PASS - The BCA is satisfied, on reasonable grounds, that the aspects of building work pertaining to this inspection demonstrate compliance with the building consent.

WASTEPIPES - 04 Aug 2021 @ 13:26 by John Dowden

Inspection Outcome: PASS - The BCA is satisfied, on reasonable grounds, that the aspects of building work pertaining to this inspection demonstrate compliance with the building consent.

FLOOR SLAB - 10 Aug 2021 @ 15:45 by John Dowden

Inspection Outcome: PASS - The BCA is satisfied, on reasonable grounds, that the aspects of building work pertaining to this inspection demonstrate compliance with the building consent.

POST WRAP / CAVITY - 01 Nov 2021 @ 10:38 by John Dowden

Inspection Outcome: FAIL- The following aspects of this inspection have resulted in a Fail result -- see the item(s) below:

E2: Veneer Wall Cladding (Masonry, Brick):
Please rectify the following and advise when work is ready for re-inspection. Install the meter box so the installation details are as per the consented plans.

These may be viewed at time of next inspection.

DRAINAGE - 02 Dec 2021 @ 16:13 by John Dowden

Inspection Outcome: INCOMPLETE - Some aspects of the building work pertaining to this inspection have yet to be checked and confirmed as complying with the building consent.

Inspection Summary: Post Wrap & Cavity Inspection. The meter box has been installed after the post wrap and cavity inspection dated, 1st of Nov 2021. The meter box has not been installed in the correct location and is on a brace wall. The flashing details are not as the consented plans see brick veneer details sheet 19. Please rectify. This can be be viewed at the Half high brick inspection.

Your next inspection will be: **Half High Brick**
Please contact us 48 hours before you require this to book your inspection.
Unresolved Matters:
The following issues are noted as still to be resolved:

Inspection: Drainage on 10 Nov 2021 by John Dowden
Required Docs: Please provide an As Built Drainage Plan

Outstanding Required Documents for this Building
Prepour

- B1: Foundations - Construction Monitoring Records PS4 - CPEng To Inspect Foundations Prior To Concrete Pour.

Floor Slab

- B1: Slab And Perimeter Subsoil Drainage - Construction Monitoring Records PS4

Drainage

- E1: Stormwater Drain As-built Plans
- G13: As-builts Drainlayer Details.

Final

- B1: Truss certification
- G9: Energy works certificate

History

Inspection Name	**Summary**
Siting and Site Scrape Inspection	**PASS** - 09 Aug 2021
Prepour	**PASS** - 09 Aug 2021
Wastepipes	**PASS** - 04 Aug 2021
Floor Slab	**PASS** - 02 Dec 2021
Framing / Pre-wrap	**PASS** - 07 Oct 2021
Post Wrap / Cavity	**FAIL** - 02 Dec 2021 **View at next inspection**
Deck / Roof membrane	-
Half High Brick	-
Preline	-
Post Line	-
Drainage	**FAIL** - 10 Nov 2021 **View at next inspection**
Final	-

Yours Sincerely,

John Dowden
Building Services Officer
On behalf of: Kaipara District Council

14 December 2021

Rachyl Edge and Regan Randell
104 Te Kowhai Drive
Maungatapere 0179

Dear Sir or Madam,

Reference Number: BC210208
Project Location: 8 Sampsons Way

Dargaville
Legal description of land where building is located: Lot 8 DP 542244
Project Description: Construct 3 Bedroom Dwelling with Attached Garage
IR Number: 8

Inspection Results:
POST WRAP / CAVITY - 14 Dec 2021 @ 12:52 by John Dowden

Inspection Outcome: PASS - The BCA is satisfied, on reasonable grounds, that the aspects of building work pertaining to this inspection demonstrate compliance with the building consent.

HALF HIGH BRICK - 14 Dec 2021 @ 12:52 by John Dowden

Inspection Outcome: PASS - The BCA is satisfied, on reasonable grounds, that the aspects of building work pertaining to this inspection demonstrate compliance with the building consent.

Inspection Summary: Half High Brick Inspection. LBP Brick Veneer cladding is Dave Winters. 70 series brick laid half high. Cavity width is good and is clean and clear of loose debris, washouts in place. Weep holes are located at 800 mm C's. Galv brick ties located @ 400 mm C's vertically and 600 mm C's horizontally. DPM and kickouts in place. Okay to continue to soffit.

Your next inspection will be: **Preline**
Please contact us 48 hours before you require this to book your inspection.
Unresolved Matters:
The following issues are noted as still to be resolved:

Inspection: Drainage on 10 Nov 2021 by John Dowden
Required Docs: Please provide an As Built Drainage Plan

Outstanding Required Documents for this Building

Prepour

- B1: Foundations - Construction Monitoring Records PS4 - CPEng To Inspect Foundations Prior To Concrete Pour.

Floor Slab

- B1: Slab And Perimeter Subsoil Drainage - Construction Monitoring Records PS4

Drainage

- E1: Stormwater Drain As-built Plans
- G13: As-builts Drainlayer Details.

Final

- B1: Truss certification
- G9: Energy works certificate

History

Inspection Name	**Summary**
Siting and Site Scrape Inspection	**PASS** - 09 Aug 2021
Prepour	**PASS** - 09 Aug 2021
Wastepipes	**PASS** - 04 Aug 2021
Floor Slab	**PASS** - 02 Dec 2021
Framing / Pre-wrap	**PASS** - 07 Oct 2021
Post Wrap / Cavity	**PASS** - 14 Dec 2021
Deck / Roof membrane	-
Half High Brick	**PASS** - 14 Dec 2021
Preline	-
Post Line	-
Drainage	**FAIL** - 10 Nov 2021 **Reinspection required**
Final	-

Yours Sincerely,

John Dowden
Building Services Officer
On behalf of: Kaipara District Council

20 December 2021

Rachyl Edge and Regan Randell
104 Te Kowhai Drive
Maungatapere 0179

Dear Sir or Madam,

Reference Number: BC210208
Project Location: 8 Sampsons Way

Dargaville
Legal description of land where building is located: Lot 8 DP 542244
Project Description: Construct 3 Bedroom Dwelling with Attached Garage
IR Number: 9

Inspection Results:
PRELINE - 20 Dec 2021 @ 16:35 by John Dowden

Inspection Outcome: **FAIL**- The following aspects of this inspection have resulted in a Fail result -- see the item(s) below:

Required Docs:
Plumbers PS 3.

These may be viewed at time of next inspection.

Inspection Summary: Pre Line Inspection. G.J Gardener Homes. Certified Plumber is Martin Crowe. Plumbers pressure test completed. Gauge not sited PS 3 to come. Pipe supply is KEMPEX, well secured. Layout as per plan. Garage door is not yet installed and opening will require weather proofing prior to Gib lining. Pink batts insulation installed. R 3.2 in ceilings and R 2.2 in walls. Air seals in place. Corner angles in shower to be installed and photographs provided. Moisture content in wall frames is good 14 - 16 %, steel rondo ceiling channel, direct fix. Okay to continue.

Your next inspection will be: **Post Line**
Please contact us 48 hours before you require this to book your inspection.
Unresolved Matters:
The following issues are noted as still to be resolved:

Inspection: Drainage on 10 Nov 2021 by John Dowden

Required Docs: Please provide an As Built Drainage Plan

Outstanding Required Documents for this Building

Prepour

- B1: Foundations - Construction Monitoring Records PS4 - CPEng To Inspect Foundations Prior To Concrete Pour.

Floor Slab

- B1: Slab And Perimeter Subsoil Drainage - Construction Monitoring Records PS4

Drainage

- E1: Stormwater Drain As-built Plans
- G13: As-builts Drainlayer Details.

Final

- B1: Truss certification
- G9: Energy works certificate

History

Inspection Name	Summary
Siting and Site Scrape Inspection	**PASS** - 09 Aug 2021
Prepour	**PASS** - 09 Aug 2021
Wastepipes	**PASS** - 04 Aug 2021
Floor Slab	**PASS** - 02 Dec 2021
Framing / Pre-wrap	**PASS** - 07 Oct 2021
Post Wrap / Cavity	**PASS** - 14 Dec 2021
Deck / Roof membrane	-
Half High Brick	**PASS** - 14 Dec 2021
Preline	**FAIL** - 20 Dec 2021 **View at next inspection**
Post Line	-
Drainage	**FAIL** - 10 Nov 2021 **View at next inspection**
Final	-

Yours Sincerely,

John Dowden
Building Services Officer
On behalf of: Kaipara District Council

01 February 2022

Rachyl Edge and Regan Randell
104 Te Kowhai Drive
Maungatapere 0179

Dear Sir or Madam,

Reference Number: BC210208
Project Location: 8 Sampsons Way

Dargaville
Legal description of land where building is located: Lot 8 DP 542244
Project Description: Construct 3 Bedroom Dwelling with Attached Garage
IR Number: 10

Inspection Results:
PRELINE - 01 Feb 2022 @ 13:56 by Greg Bellam

Inspection Outcome: PASS - The BCA is satisfied, on reasonable grounds, that the aspects of building work pertaining to this inspection demonstrate compliance with the building consent.

POST LINE - 01 Feb 2022 @ 13:56 by Greg Bellam

Inspection Outcome: PASS - The BCA is satisfied, on reasonable grounds, that the aspects of building work pertaining to this inspection demonstrate compliance with the building consent.

DRAINAGE - 01 Feb 2022 @ 13:56 by Greg Bellam

Inspection Outcome: PASS - The BCA is satisfied, on reasonable grounds, that the aspects of building work pertaining to this inspection demonstrate compliance with the building consent.

Inspection Summary: Post line completed as per consented plans. Standard and brace sheets fixed to gib specs. Aqua line to wet rooms fixed as per standard sheets. These walls not to be tiled. Okay to continue.

Your next inspection will be: **Final**
Please contact us 48 hours before you require this to book your inspection.

Outstanding Required Documents for this Building

Final

- B1: Truss certification
- G9: Energy works certificate

History

Inspection Name	Summary
Siting and Site Scrape Inspection	**PASS** - 09 Aug 2021
Prepour	**PASS** - 09 Aug 2021
Wastepipes	**PASS** - 04 Aug 2021
Floor Slab	**PASS** - 02 Dec 2021
Framing / Pre-wrap	**PASS** - 07 Oct 2021
Post Wrap / Cavity	**PASS** - 14 Dec 2021
Deck / Roof membrane	-
Half High Brick	**PASS** - 14 Dec 2021
Preline	**PASS** - 01 Feb 2022
Post Line	**PASS** - 01 Feb 2022
Drainage	**PASS** - 01 Feb 2022
Final	-

Yours Sincerely,

Greg Bellam
Senior Building Services Officer
On behalf of: Kaipara District Council

Notes: .

Notes: .

22 March 2022

Rachyl Edge and Regan Randell
104 Te Kowhai Drive
Maungatapere 0179

Dear Sir or Madam,

Reference Number: BC210208
Project Location: 8 Sampsons Way

Dargaville
Legal description of land where building is located: Lot 8 DP 542244
Project Description: Construct 3 Bedroom Dwelling with Attached Garage
IR Number: 11

Inspection Results:
FINAL - 22 Mar 2022 @ 08:20 by John Edwards

Inspection Outcome: **FAIL**- The following aspects of this inspection have resulted in a Fail result -- see the item(s) below:

Required Docs:
1-Please upload all outstanding paperwork to the portal.

Section 45: Consent Documents:
Please provide the following:
1-ROW required Carpentry , the framing and bracing ROW boxes also need to be completed.

Site Considerations:
Finished ground level is not graded to ensure surface water is managed within the site and does not cause nuisance to other properties or to the finished structure. Please remedy
1-The ground appears to be sloping slightly towards the house at he garage end ,ground levels to slope away from the building for at least 1m. Please check all.

E1: Surface Water:
Please rectify
1- fit silt traps .

E3: Internal Moisture:
Please rectify the following
1-seal the vanity to the wall.

2-seal top of shower liner to the wall.

G7, G8, G9: Light and Electricity:
Please provide:
1-fit lights to portico area

Specific reinspection of these matters is required before building work may proceed.

Formal Directive: 1-Please upload outstanding paperwork to the portal.
2-garage door jamb to have 6mm clearance from the concrete rebate.
3-seal brick to cladding.
4-seal gap between beam and cladding portico area
5-fit heat pump.

Site Communication: Gergia super visor over phone

Inspection Summary: Dwelling
Near completed ,refer notes ,building is fully painted ,carpeted, driveway inplace ,weathertight.

Your next inspection will be: **Final**
Please contact us 48 hours before you require this to book your inspection.

Outstanding Required Documents for this Building

History

Inspection Name	**Summary**
Siting and Site Scrape Inspection	**PASS** - 09 Aug 2021
Prepour	**PASS** - 09 Aug 2021
Wastepipes	**PASS** - 04 Aug 2021
Floor Slab	**PASS** - 02 Dec 2021
Framing / Pre-wrap	**PASS** - 07 Oct 2021
Post Wrap / Cavity	**PASS** - 14 Dec 2021
Deck / Roof membrane	-
Half High Brick	**PASS** - 14 Dec 2021
Preline	**PASS** - 01 Feb 2022
Post Line	**PASS** - 01 Feb 2022
Drainage	**PASS** - 01 Feb 2022
Final	**FAIL** - 22 Mar 2022 **Reinspection required**

Yours Sincerely,

John Edwards
building control officer
On behalf of: Kaipara District Council

Notes: Final - Default #1 21/03/22

Notes: Final - Default #2 21/03/22

Notes: Final - Eloy alarm 3 21/03/22

Notes: Final - Default #5 21/03/22

Notes: Final -hwc8 21/03/22

23 March 2022

Rachyl Edge and Regan Randell
104 Te Kowhai Drive
Maungatapere 0179

Dear Sir or Madam,

Reference Number: BC210208
Project Location: 8 Sampsons Way

Dargaville
Legal description of land where building is located: Lot 8 DP 542244
Project Description: Construct 3 Bedroom Dwelling with Attached Garage
IR Number: 12

Inspection Results:
DECK / ROOF MEMBRANE - 23 Mar 2022 @ 11:59 by Aaron Brown

Inspection Outcome: NOT APPLICABLE

FINAL - 23 Mar 2022 @ 11:59 by Aaron Brown

Inspection Outcome: PASS - The BCA is satisfied, on reasonable grounds, that the aspects of building work pertaining to this inspection demonstrate compliance with the building consent.

Your next inspection will be: **No further inspection required**

Outstanding Required Documents for this Building

History

Inspection Name	Summary
Siting and Site Scrape Inspection	**PASS** - 09 Aug 2021
Prepour	**PASS** - 09 Aug 2021
Wastepipes	**PASS** - 04 Aug 2021
Floor Slab	**PASS** - 02 Dec 2021
Framing / Pre-wrap	**PASS** - 07 Oct 2021
Post Wrap / Cavity	**PASS** - 14 Dec 2021

Deck / Roof membrane	**NOT APPLICABLE** - 23 Mar 2022
Half High Brick	**PASS** - 14 Dec 2021
Preline	**PASS** - 01 Feb 2022
Post Line	**PASS** - 01 Feb 2022
Drainage	**PASS** - 01 Feb 2022
Final	**PASS** - 23 Mar 2022

Yours Sincerely,

Aaron Brown
Principal Building Lead
On behalf of: Kaipara District Council

Inspection Photos Record on Project 210208

Building: Main Building
Inspection: Wastepipes
Question: Have all construction monitoring records and required documents that are required as at this point of the construction process been provided? [These may include: Location certificate; Ground bearing verification; Pipework pressure tests; As-built drawings; Warrantie...
Inspector: John Dowden
Timestamp: 2021-08-04 16:54:30
Comment: Wastepipes - U/S As built plan. #1 04/08/21

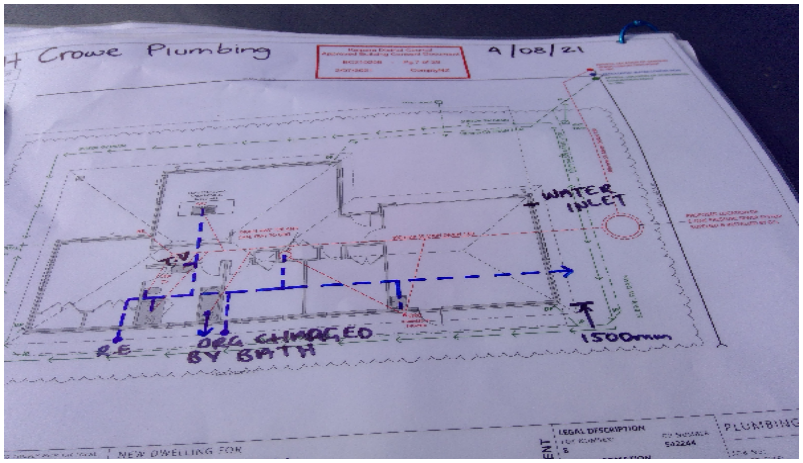

Building: Main Building
Inspection: Wastepipes
Question: Is the installation of the foul water system complying? [Check: Fixture layout; Pipework - materials, size, length, gradient and support; Separation - pipes passing through concrete are sleeved; Bedding - material, pipework properly supported; Pipework tests; Plumbe...
Inspector: John Dowden
Timestamp: 2021-08-04 16:54:30
Comment: Wastepipes - #1 04/08/21

Building: Main Building
Inspection: Wastepipes
Question: Is the installation of the foul water system complying? [Check: Fixture layout; Pipework - materials, size, length, gradient and support; Separation - pipes passing through concrete are sleeved; Bedding - material, pipework properly supported; Pipework tests; Plumbe...
Inspector: John Dowden
Timestamp: 2021-08-04 16:54:30
Comment: Wastepipes - U/S WASTE Falls & bedding #2 04/08/21

Inspection Photos Record on Project 210208

Building: Main Building
Inspection: Wastepipes
Question: Is the installation of the foul water system complying? [Check: Fixture layout; Pipework - materials, size, length, gradient and support; Separation - pipes passing through concrete are sleeved; Bedding - material, pipework properly supported; Pipework tests; Plumbe...
Inspector: John Dowden
Timestamp: 2021-08-04 16:54:30
Comment: Wastepipes - under flood #3 04/08/21

Building: Main Building
Inspection: Floor Slab
Question: Is floor slab construction compliant (and if required) has construction monitoring occurred? [Check: Siting; Ground bearing; Shear pile details; Pod and trench construction; Foundation construction; Hard fill, blinding, DPM and insulation; Reinforcing - grade, size,...
Inspector: John Dowden
Timestamp: 2021-08-09 14:55:38
Comment: Floor Slab - #1 09/08/21

Building: Main Building
Inspection: Floor Slab
Question: Is floor slab construction compliant (and if required) has construction monitoring occurred? [Check: Siting; Ground bearing; Shear pile details; Pod and trench construction; Foundation construction; Hard fill, blinding, DPM and insulation; Reinforcing - grade, size,...
Inspector: John Dowden
Timestamp: 2021-08-09 14:55:38
Comment: Floor Slab - Garage slab edge thickening steel detail #2 09/08/21

Inspection Photos Record on Project 210208

Building: Main Building
Inspection: Floor Slab
Question: Is floor slab construction compliant (and if required) has construction monitoring occurred? [Check: Siting; Ground bearing; Shear pile details; Pod and trench construction; Foundation construction; Hard fill, blinding, DPM and insulation; Reinforcing - grade, size,...
Inspector: John Dowden
Timestamp: 2021-08-09 14:55:38
Comment: Floor Slab - Re entry bars. #3 09/08/21

Building: Main Building
Inspection: Post Wrap / Cavity
Question: Is work complying? [Check: Rebate construction and damp proofing; Wall wrap installation - undamaged, secure, complying laps, penetrations sealed; Support bars installation; Air barrier installation; Flashing installation].
Inspector: John Dowden
Timestamp: 2021-11-01 15:20:24
Comment: Post Wrap / Cavity - #1 01/11/21

Building: Main Building
Inspection: Post Wrap / Cavity
Question: Is work complying? [Check: Rebate construction and damp proofing; Wall wrap installation - undamaged, secure, complying laps, penetrations sealed; Support bars installation; Air barrier installation; Flashing installation].
Inspector: John Dowden
Timestamp: 2021-11-01 15:20:24
Comment: Post Wrap / Cavity - #2 01/11/21

Inspection Photos Record on Project 210208

Building: Main Building
Inspection: Post Wrap / Cavity
Question: Is work complying? [Check: Rebate construction and damp proofing; Wall wrap installation - undamaged, secure, complying laps, penetrations sealed; Support bars installation; Air barrier installation; Flashing installation].
Inspector: John Dowden
Timestamp: 2021-11-01 15:20:24
Comment: Post Wrap / Cavity - #3 01/11/21

Building: Main Building
Inspection: Post Wrap / Cavity
Question: Is the roof cladding installation complying? [Check: Roof pitch; Materials - grade, colour, profile; Substrate system and support; Underlay - support, undamaged, complying lap with anti-ponding boards where required, installation - laps, seals, cover, expansion, fix...
Inspector: John Dowden
Timestamp: 2021-11-01 15:20:24
Comment: Post Wrap / Cavity - #1 01/11/21

Building: Main Building
Inspection: Half High Brick
Question: Is veneer construction compliant? [Check: Panel sizes - height, width and location; Wrap - clear of conflict with cavity; Cavity - size, clear of mortar and services; Penetrations sealed; Ties - treatment, length and spacing; Control joint location; Drainage and ve...
Inspector: John Dowden
Timestamp: 2021-12-14 15:52:09
Comment: Half High Brick - #1 14/12/21

Inspection Photos Record on Project 210208

Building: Main Building
Inspection: Half High Brick
Question: Is veneer construction compliant? [Check: Panel sizes - height, width and location; Wrap - clear of conflict with cavity; Cavity - size, clear of mortar and services; Penetrations sealed; Ties - treatment, length and spacing; Control joint location; Drainage and ve...
Inspector: John Dowden
Timestamp: 2021-12-14 15:52:09
Comment: Half High Brick - #2 14/12/21

Building: Main Building
Inspection: Preline
Question: Is the installation of the water supply service compliant? [Check: LBP details are recorded; Hot and cold water supply is compliant - materials, jointing, pipe sizes, pipe run & support, insulation, valving, sealing of penetrations, back-flow protection; Pipework t...
Inspector: John Dowden
Timestamp: 2021-12-20 16:09:31
Comment: Preline - KEMPEX pipe supply #1 20/12/21

Building: Main Building
Inspection: Preline
Question: Is installation of the internal foul water system pipework and internal venting compliant? [Check: Drains, wastes, vents checking materials, pipework jointing, gradient, size, length and support; record LBP details].
Inspector: John Dowden
Timestamp: 2021-12-20 16:09:31
Comment: Preline - vented line #1 20/12/21

Inspection Photos Record on Project 210208

Building: Main Building
Inspection: Preline
Question: Is pre-line construction compliant?
Inspector: John Dowden
Timestamp: 2021-12-20 16:09:31
Comment: Preline - #1 20/12/21

Building: Main Building
Inspection: Preline
Question: Is the installation of the wall and ceiling insulation compliant? Check: Glazing; Insulation R-value and installation; Thermal bridging].
Inspector: John Dowden
Timestamp: 2021-12-20 16:09:31
Comment: Preline - #1 20/12/21

Building: Main Building
Inspection: Drainage
Question: Is construction of the foul water drainage system in accordance with the building consent? [Check: Drain separation from foundations; Impact on existing drains / termination of redundant services; Pipework, vents and inspection points - considering materials, pipe si...
Inspector: John Dowden
Timestamp: 2021-11-10 15:00:59
Comment: Drainage - E1 GRINDER & IP #1 10/11/21

Inspection Photos Record on Project 210208

Building: Main Building
Inspection: Drainage
Question: Is construction of the foul water drainage system in accordance with the building consent? [Check: Drain separation from foundations; Impact on existing drains / termination of redundant services; Pipework, vents and inspection points - considering materials, pipe si...
Inspector: John Dowden
Timestamp: 2021-11-10 15:00:59
Comment: Drainage - ORG under flood #2 10/11/21

Building: Main Building
Inspection: Final
Question: Have all construction monitoring records and required documents that are required as at this point of the construction process been provided? [These may include: Location certificate; Ground bearing verification; Pipework pressure tests; As-built drawings; Warrantie...
Inspector: John Edwards
Timestamp: 2022-03-22 08:19:37
Comment: Final - Default #1 21/03/22

Building: Main Building
Inspection: Final
Question: Have all construction monitoring records and required documents that are required as at this point of the construction process been provided? [These may include: Location certificate; Ground bearing verification; Pipework pressure tests; As-built drawings; Warrantie...
Inspector: John Edwards
Timestamp: 2022-03-22 08:19:37
Comment: Final - Default #2 21/03/22

Inspection Photos Record on Project 210208

Building: Main Building
Inspection: Final
Question: Have all construction monitoring records and required documents that are required as at this point of the construction process been provided? [These may include: Location certificate; Ground bearing verification; Pipework pressure tests; As-built drawings; Warrantie...
Inspector: John Edwards
Timestamp: 2022-03-22 08:19:37
Comment: Final - Eloy alarm 3 21/03/22

Building: Main Building
Inspection: Final
Question: Have all construction monitoring records and required documents that are required as at this point of the construction process been provided? [These may include: Location certificate; Ground bearing verification; Pipework pressure tests; As-built drawings; Warrantie...
Inspector: John Edwards
Timestamp: 2022-03-22 08:19:37
Comment: Final - ORG 21/03/22

Building: Main Building
Inspection: Final
Question: Have all construction monitoring records and required documents that are required as at this point of the construction process been provided? [These may include: Location certificate; Ground bearing verification; Pipework pressure tests; As-built drawings; Warrantie...
Inspector: John Edwards
Timestamp: 2022-03-22 08:19:37
Comment: Final - Default #5 21/03/22

Inspection Photos Record on Project 210208

Building: Main Building
Inspection: Final
Question: Have all construction monitoring records and required documents that are required as at this point of the construction process been provided? [These may include: Location certificate; Ground bearing verification; Pipework pressure tests; As-built drawings; Warrantie...
Inspector: John Edwards
Timestamp: 2022-03-22 08:19:37
Comment: Final - Default #6 21/03/22

Building: Main Building
Inspection: Final
Question: Have all construction monitoring records and required documents that are required as at this point of the construction process been provided? [These may include: Location certificate; Ground bearing verification; Pipework pressure tests; As-built drawings; Warrantie...
Inspector: John Edwards
Timestamp: 2022-03-22 08:19:37
Comment: Final - Default #7 21/03/22

Building: Main Building
Inspection: Final
Question: Have all construction monitoring records and required documents that are required as at this point of the construction process been provided? [These may include: Location certificate; Ground bearing verification; Pipework pressure tests; As-built drawings; Warrantie...
Inspector: John Edwards
Timestamp: 2022-03-22 08:19:37
Comment: Final -hwc8 21/03/22

Inspection Photos Record on Project 210208

Building: Main Building
Inspection: Final
Question: Have all construction monitoring records and required documents that are required as at this point of the construction process been provided? [These may include: Location certificate; Ground bearing verification; Pipework pressure tests; As-built drawings; Warrantie...
Inspector: John Edwards
Timestamp: 2022-03-22 08:19:37
Comment: Final - Default #9 21/03/22

Building: Main Building
Inspection: Final
Question: Have all construction monitoring records and required documents that are required as at this point of the construction process been provided? [These may include: Location certificate; Ground bearing verification; Pipework pressure tests; As-built drawings; Warrantie...
Inspector: John Edwards
Timestamp: 2022-03-22 08:19:37
Comment: Final - Default #10 21/03/22

Building: Main Building
Inspection: Final
Question: Have all construction monitoring records and required documents that are required as at this point of the construction process been provided? [These may include: Location certificate; Ground bearing verification; Pipework pressure tests; As-built drawings; Warrantie...
Inspector: John Edwards
Timestamp: 2022-03-22 08:19:37
Comment: Final - Default #11 21/03/22

RS Eng Ltd

09 4383273
office@RSEng.co.nz
2 Seaview Road,
Whangarei, 0110

File No. 17644

Date 6 August 2021

Time 3:00 PM

BC No. BC210208

Site Inspection Sheet

Health & Safety

Site Induction Completed Yes

Task to be completed
RibRaft inspection

Significant site risks associated with task
Slips, trips and falls

Controls for risk
PPE
Be aware

Accidents or near misses
No

Inspection Details

Project New Dwelling - Randell

Purpose of Inspection RibRaft inspection

Site Address Lot 8, Sampsons Way, Dargaville

Name of Contact Aaron Bates

Contact Email Address Aaron@abfoundations.co.nz

Additional Contact Email No

Comments
3 x HD12 bottom, 1x HD12 top in edge beam with brick rebate.

Internal beam steel and laps okay.

SE72 mesh used.

Garage door rebate detail shows two HD12 at top of footing, an extra bar needs to be added to the top.

Double pipe penetration needs trimmer bars added around perimeter.

re-entrant bars at internal corners are touching pods. Bars need to be lifted approx. 10mm.

Photos to be provided once completed.

Action Required?

As above

Next Inspection	TBC
Email of Engineer	liam@rseng.co.nz
Name of Engineer	Liam Fuller
Signature	

Upload Photos

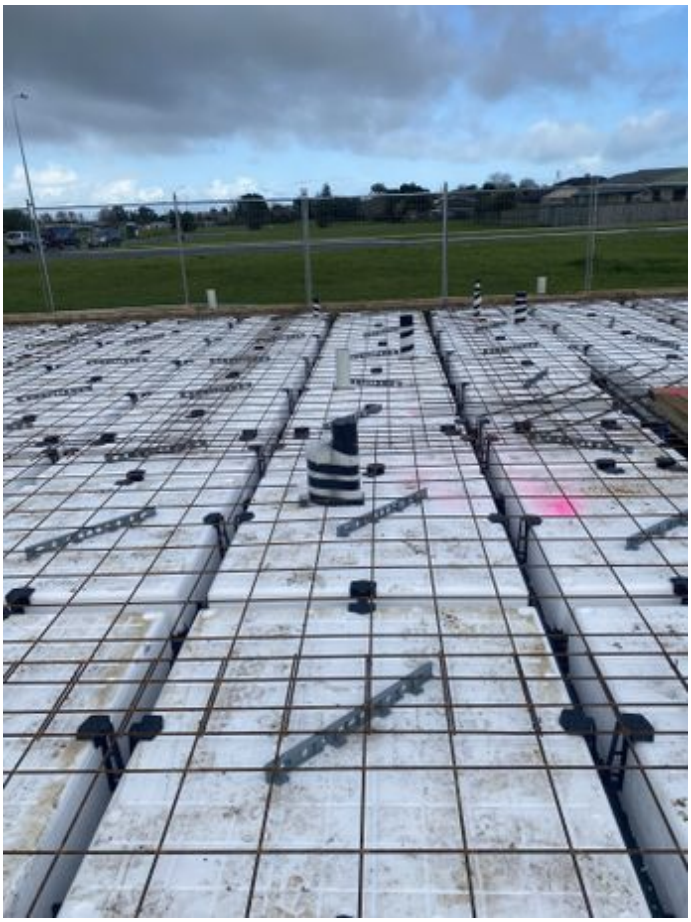

RS Eng Ltd

09 4383273
office@RSEng.co.nz
2 Seaview Road,
Whangarei, 0110

File No. 17644

Date 29 July 2021

Time 11:15 AM

BC No. 210208

Site Inspection Sheet

Health & Safety

Site Induction Completed Yes

Task to be completed
Hardfill test

Significant site risks associated with task
No

Controls for risk
N/A

Accidents or near misses
No

Inspection Details

Project New Dwelling - GJ Gardner Homes - Randall

Purpose of Inspection Hardfill test

Site Address Lot 8, Sampsons Way, Dargaville

Name of Contact Georgia

Contact Email Address georgia.witt-green@gjgardner.co.nz

Additional Contact Email No

Comments
Hardfill completed for building platform. Geotexile mat placed before filling. Perimeter drains installed. Clegg testing indicates adequate compaction with values over 21. Scala penetrometer testing in deep areas of hardfill indicates ultimate bearing capacities over 300kPa. Ok to proceed with RibRaft preparation.

Action Required?

No

Next Inspection	RibRaft pre-pour
Email of Engineer	iain@rseng.co.nz
Name of Engineer	Iain Mackay
Signature	

Upload Photos

Cladding as bracing

12 mm Ecoply (CD face grade or better) can be H3 treated to meet the requirements of Acceptable Solution E2/AS1 and will perform as a structural, durable and weathertight cladding and bracing element when installed in accordance with E2/AS1.

It should be noted smooth faced plywood such as Ecoply may be prone to appearance related issues such as face checking which occurs naturally and is not considered by CHH Woodproducts to be a manufacturing or product fault. For more information refer to section 1.8: General Design Considerations - Face Checks on Plywood Exposed to Weather. H3.2 CCA treated Ecoply may also have a green tinge to the wood surface and may have fillet marks on the face of the sheet.

Plywood for exterior cladding applications where a high visual appearance is desired, CHH Woodproducts recommends the use of Shadowclad as an exterior cladding. Shadowclad has a textured (bandsawn) face which reduces the visibility of face checking and is most commonly H3.1 LOSP treated (clear preservative treatment) which does not leave fillet marks on the panel face.

For further information on Shadowclad as an exterior cladding refer to the current Shadowclad Specification and Installation Guide for Cavity Construction which can be downloaded from www.chhwoodproducts.co.nz.

Soil

Ecoply must not be allowed to come in contact with soil. The bottom edge of the plywood sheet must be a minimum of 100 mm above decks or paved ground and a minimum of 175 mm above unprotected ground.

Service penetrations in bracing elements

Small openings (e.g. power outlets) of 90 x 90 mm or less may be placed no closer than 90 mm to the edge of the braced element, or waste pipe outlets of max. 150 mm diameter placed at no closer than 150 mm to the edge of the braced element.

3.2 ECOPLY® BRACING SPECIFICATIONS SUMMARY

CHH Woodproducts has a range of bracing specifications called the EP bracing series. The EP bracing series simplifies the design and construction of bracing elements using plywood, by itself or in conjunction with GIB® Plasterboard and features:

- Single sided and double sided bracing elements High performance bracing element utilising GIB® Standard plasterboard
- A single type, GIB Handibrac®, hold-down for all bracing elements
- Specifications for each bracing element type

Table 9: Summary P21 Ratings for 2.4m High Ecoply® Wall Elements

Specification No.	Minimum Wall Length	Lining Requirements	BUs/m Wind	BUs/m Earthquake
EP1	0.4 m	Ecoply one side	80	95
	0.6 m		95	105
	1.2 m		120	135
EPG	0.4 m	Ecoply one side and 10 mm GIB® Standard plasterboard other side	100	115
	1.2 m		150	150

Note: Bracing and other technical information has been specifically tested using Ecoply branded structural plywood. This information cannot be used with any other plywood brand and bracing data must be sought directly from the specific plywood manufacturer.

More information

The following pages provide a full specification of EP bracing elements. Copies of specifications can be downloaded from www.chhwoodproducts.co.nz

NZS 3604 provides the method of calculating demand on a building. Calculation sheets are available from BRANZ or GIB EzyBrace® software is available as a free download from www.gib.co.nz. Information is available at www.chhwoodproducts.co.nz which can be placed in the custom elements of GIB EzyBrace® for ease of calculation

Ecoply® Bracing Systems are designed to meet the requirements of the NZBC and have been tested and analysed using the P21 method referenced in NZS 3604:2011 listed as an acceptable solution B1/AS1 Structure. Testing was carried out using Ecoply manufactured by Carter Holt Harvey and SG8 timber framing, and GIB® products manufactured by Winstone Wallboards Ltd. Substituting materials may compromise performance of the system. GIB® and GIB HandiBrac® are registered trade marks of Fletcher Building Holdings Ltd.

SEPTEMBER 2015

TEK
Marshall

KAIPARA DISTRICT
Kaipara te Oranganui • Two Oceans Two Harbours

KAIPARA DISTRICT COUNCIL

Private Utility Service As-Built Record

(Section 216, Building Act 2004)

Part A Consent Details (to be completed in all cases)

Building Consent Number 210208

Applicants Name ..... R. Edge + R Randell

Applicants Mailing Address .....

.....

Site Address ..... 8 Sampsons Way, Dargaville

Part B As Built Services Information (to be completed in relation to service provided, ticking each box as appropriate)

Wastewater - Pressure

(Pump Make/Model) E-ONE

Connection Diameter

- [x] 40mm
- [ ] 50mm
- [ ] 80mm
- [ ] Other _____ mm

Pipe Material

- [ ] uPVC
- [ ] Vitrified Clay
- [ ] Concrete
- [x] Other HDPE

Connection Type

- [x] Public Utility Service Connection
- [ ] Septic Tank
- [ ] Other _____

Wastewater - Gravity

Connection Diameter

- [ ] 65mm
- [ ] 80mm
- [x] 100mm
- [ ] Other _____ mm

Pipe Material

- [x] uPVC
- [ ] Vitrified Clay
- [ ] Concrete
- [ ] Other _____

Connection Type

- [x] Public Utility Service Connection
- [ ] Soak Hole
- [ ] Stream
- [x] Other E-ONE

Wastewater - Disposal System Description

Septic Tank

Size: _____ litres

Type

- [ ] **Septic tank DECOMMISSIONED**
- [ ] Ecotank
- [ ] Biocycle

Effluent Field

Trench _____ m

- [ ] Deep Soakhole

Depth _____ m

Number of holes _____ m

- [ ] Other _____

Sanitary Facilities

- [ ] Toilet Number _____
- [ ] Bidet Number _____
- [ ] Urinal Number _____

Waste Disposal Unit

- [ ] No
- [ ] Yes Type _____

Certification

I Derek Hulse being

- [ ] Owner
- [ ] Occupier
- [ ] Craftsman plumber
- [x] Registered drainlayer

Registration Number _____

Registration Number 16049

certify that this Private Utility Service As-Built Record is an accurate representation of the work carried out.

D J Hulse
Signature

12/12/21
Date

Stormwater

Pipe Diameter

- [ ] 80mm
- [x] 100mm
- [ ] 150mm
- [ ] 225mm
- [ ] Other _____ mm

Pipe Material

- [x] uPVC
- [ ] Vitrified Clay
- [ ] Ductile Iron
- [ ] Concrete
- [ ] Other _____

Connection Type

- [x] Public Utility Service Connection
- [ ] Soak Hole
- [ ] Stream
- [ ] Drain
- [ ] Other _____

Water Supply

Pipe Material - Cold

- [ ] uPVC
- [ ] Copper
- [ ] Polybutylene
- [ ] Other _____

Hot Water Cylinder

- [ ] High Pressure _____ Litre
- [ ] Low Pressure _____ Litre

Meter Type

Make _____ Model _____

Pipe Material - Hot

- [ ] uPVC
- [ ] Copper
- [ ] Polybutylene
- [ ] Other _____

Diameter _____

Serial Number _____

Reading [ ][ ][ ][ ][ ][ ][ ] m³

(Quote all black figures inclusive of zeros only)

Note Part B As Built Services Information

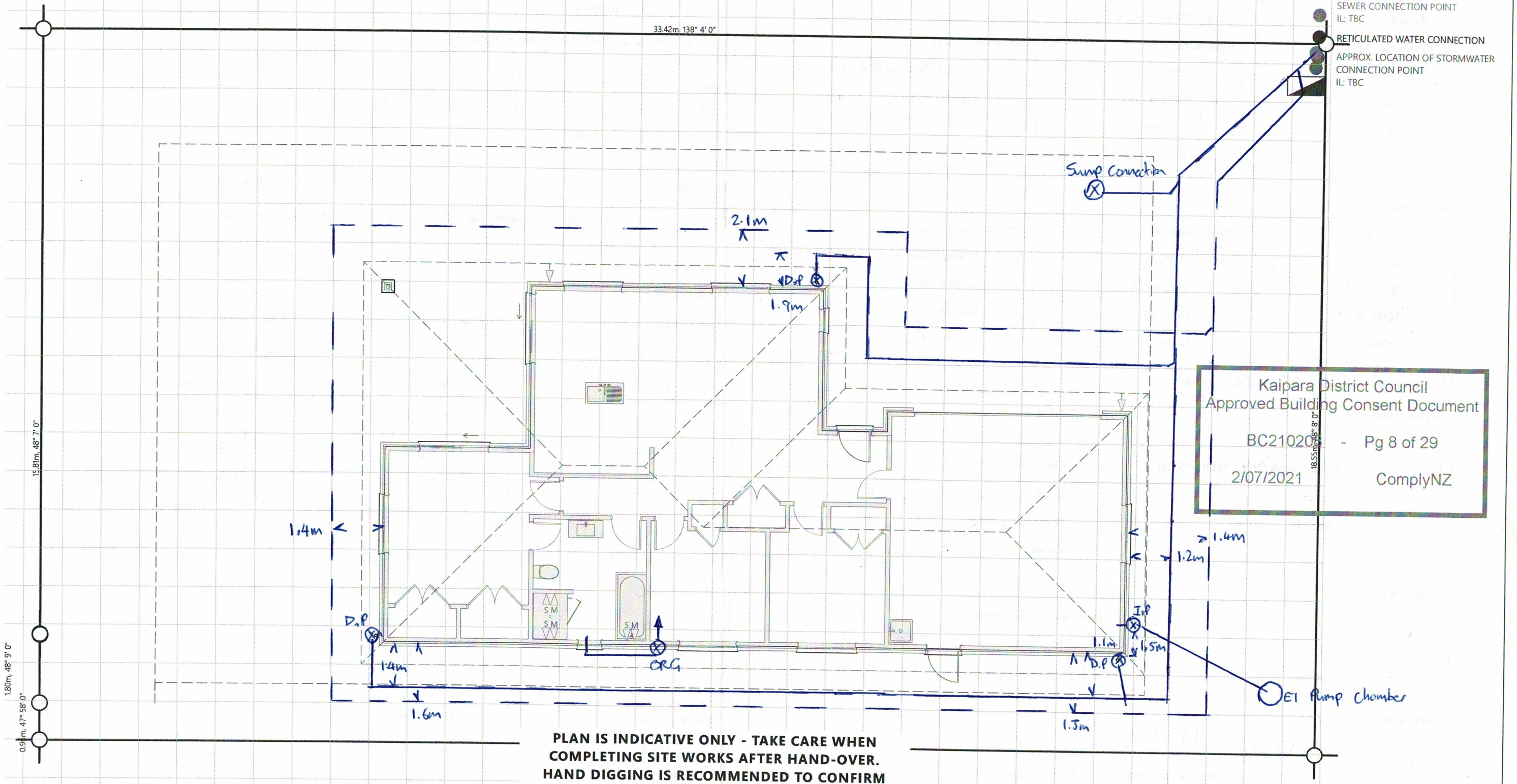

Kaipara District Council
Approved Building Consent Document
BC2102038 - Pg 8 of 29
2/07/2021 ComplyNZ

PLAN IS INDICATIVE ONLY - TAKE CARE WHEN COMPLETING SITE WORKS AFTER HAND-OVER. HAND DIGGING IS RECOMMENDED TO CONFIRM DRAIN LOCATIONS PRIOR TO FUTURE WORK

GRIDLINES SET OUT AT 1.0M CENTRES

G.J. Gardner. HOMES

COPYRIGHT - THIS DRAWING REMAINS THE PROPERTY OF G.J. GARDNER HOMES AND IS PROVIDED FOR THE USE DESCRIBED AND MAY NOT BE USED OR REPRODUCED IN WHOLE OR IN PART WITHOUT PERMISSION

SUDFELT CONSTRUCTION LTD
WHANGAREI / KAIPARA
FRANCHISEE FOR
G.J.GARDNER HOMES
14 PERCY STREET,
KENSINGTON
P (09) 437 5666
www.gjgardner.co.nz

ALL CONSTRUCTION TO COMPLY WITH THE LOCAL AUTHORITY REQUIREMENTS, NZ BUILDING CODE/APPROVED DOCUMENTS, AND MEANS OF COMPLIANCE, INCL. NZS3604:2011

ALL DIMENSION AND LEVELS ARE TO BE CHECKED BY CONTRACTOR PRIOR TO COMMENCEMENT OF WORK. CONTRACTOR TO REPORT ANY DISCREPANCY.

DO NOT SCALE OFF PLANS

NEW DWELLING FOR
EDGE & RANDELL
LOT 8 SAMPSONS WAY
DARGAVILLE
KAIPARA

CONSENT

LEGAL DESCRIPTION
LOT NUMBER: **8**
DP NUMBER: **542244**

SITE INFORMATION
SITE AREA: **619m²**
CORROSION: **C**
DISTRICT PLAN ZONE: **RESIDENTIAL**
WIND ZONE: **HIGH**

PLUMBING & DRAINAGE AS-BUILT

JOB No:	390076
SHEET SIZE:	A3
SCALE:	1:100
DRAWN:	C. LIENERT
PUBLISHED:	30/03/2021

SHEET: 7
CHECKED: MS

KAIPARA DISTRICT

Kaipara te Oranganui • Two Oceans Two Harbours

KAIPARA DISTRICT COUNCIL

Producer Statement Construction (PS3) - Plumbing

Issued by: Marty Crowe being a Registered Certifying Plumber.

In respect of the testing of water pipework prior to concealment for:

(Owner) Rachyl Edge & Raegan Randell

At (Address) 8 Sampsons Way

Dargaville

Legal Description: Lot 8 DP 542244 Valuation _____

I have sighted the issued Building Consent (BC 210298) and have constructed the plumbing pipes and fitting in accordance with the approved Building Consent, the New Zealand Building Code, and the manufacturers specifications and requirements.

I have tested the water supply system as follows:

(✓) By pressurising the water supply system by subjecting the hot and cold system to a pressure of 1500kPa for a period of not less that 15 minutes and inspecting the system to ensure that there are no leaks, in accordance with NZBC G12/AS1 Clause 7.5.1

( ) By pressurising the UPVC water piping systems to 1.5 times the working pressure for a period not less than 15 minutes and checking that there are no leaks, as given in section 9 of NZS 7643, in accordance with NZBC G12/AS1 clause 7.5.2

I believe on reasonable grounds that the pipework has passed that test.

I also understand that Kaipara District Council in accepting this Producer Statement Construction (PS3), will be relying on it to establish compliance at the completion of the building work.

Signature of Certifying Plumber: _____

Registration Number: 18023 Reg Expiry Date: 31/3/22

Date: 15/12/21

File: 17644
7 December 2021
Issue: 1

CONSTRUCTION MONITORING

Sampsons Way, Dargaville

RS Eng Ltd has carried out construction monitoring of building work associated with the new dwelling on Lot 8 DP 542244, as requested by GJ Gardner Homes. Inspections were undertaken by Technicians from RS Eng between 19 July 2021 and 6 August 2021.

The inspections were limited to stripped site, compaction of hardfill and the RibRaft reinforcing steel.

Following the inspections, remedial works were required. This consisted of re-entrant bars needing to be lifted off the pods, 1200mm long HD12 trimmer bars added to double pipe penetrations, and an extra bar added to the top of the garage door rebate. This work was confirmed by photos supplied by the contractor.

This report has been prepared solely for the benefit of our client and the Kaipara District Council. RS Eng Ltd concludes, based on the limited scope outlined above, that the works inspected has been generally completed as per the Building Consent documentation and subsequent instructions. A Producer Statement Construction Review (PS4) covering our inspections is attached.

Prepared by:

Liam Fuller
Engineering Technician

Approved by:

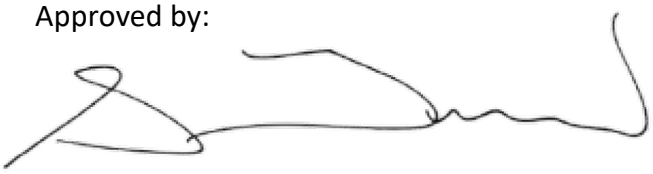

Steve Turner
BE (Civil), CPEng, Int PE, CMEngNZ
Director

RS Eng Ltd

PRODUCER STATEMENT – PS4
CONSTRUCTION REVIEW

Building Code Clause(s):	B1,	Job number: 17644
ISSUED BY: *(Construction Monitoring Firm)*	RS Eng Ltd	
TO: *(Client)*	GJ Gardner Homes - Edge & Randell	
TO BE SUPPLIED TO: *(Building Consent Authority)*	Kaipara District Council	
IN RESPECT OF: *(Description of building work))*	New build	
AT: *(Address))*	Sampsons way, , Dargaville	
LEGAL DESCRIPTION	Lot 8 DP 542244	

We have been engaged by GJ Gardner Homes - Edge & Randell to provide CM2 level of construction monitoring relating to the Clause(s) named above of the Building Code for the building work which is covered by the attached Construction Monitoring Report

- issued by RS Eng Ltd and
- which is described in the documents relating to the Building Consent No. BC210208 and
- those relating to Building Consent Amendment(s) No. N/A

issued during the course of the works.

We have sighted these Building Consents and the conditions attached to them.

Authorised instructions/variation(s) detailed/listed in the attached Schedule have been issued during the course of the works.

On the basis of these review(s) and information supplied by the contractor during the course of the works and on behalf of RS Eng Ltd, I believe on reasonable grounds that the building works covered by the attached Construction Monitoring Report have been completed in accordance with the relevant requirements of the Building Consent and Building Consent Amendments identified above or in the attached Schedule, with respect to Clause(s) B1, of the Building Code. I also believe on reasonable grounds that the persons who have undertaken this construction review have the necessary competence to do so.

I, Steve Turner am:

- CPEng number 87465
- and hold the following qualifications: B.E., CMEngNZ, IntPE(NZ)

RS Eng Ltd holds a current policy of Professional Indemnity Insurance no less than $200,000.

✓ RS Eng Ltd is a member of ACE New Zealand.

SIGNED BY: Steve Turner

(Signature): 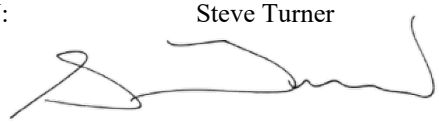 Date: 7/12/2021

Job Number: 17644
Job Address: Sampsons way, , Dargaville
Compilation Date and Time: 06 December 2021 at 9:03 AM

ON BEHALF OF: RS Eng Ltd

Note: This statement has been prepared solely for Kaipara District Council above and shall not be relied upon by any other person or entity. Any liability in relation to this statement accrues to RS Eng Ltd only. As a condition of reliance on this statement, Kaipara District Council accepts that the total maximum amount of liability of any kind arising from this statement and all other statements provided to Kaipara District Council in relation to this building work, whether in tort or otherwise, is limited to the sum of $200,000.

This form is to accompany **Forms 6 or 8** of the **Building (Forms) Regulations 2004** for the issue of a Code Compliance Certificate

SCHEDULE TO PS 4

Please include an itemised list of all referenced documents, drawings, or other supporting materials in relation to this producer statement below:

Limited Scope of Engagement

The engagement is in respect of the following parts of the building work:

As Per RS Eng Construction Monitoring Report - Job No. 17644

GUIDANCE ON USE OF PRODUCER STATEMENTS

Information on the use of Producer Statements and Construction Monitoring Guidelines can be found on either the **ACE New Zealand** or **Engineering New Zealand** websites.

Producer statements were first introduced with the Building Act 1991. The producer statements were developed by a combined task committee consisting of members of the New Zealand Institute of Architects (NZIA), Institution of Professional Engineers New Zealand (now Engineering New Zealand), Association of Consulting and Engineering New Zealand (ACE NZ) in consultation with the Building Officials Institute of New Zealand (BOINZ). The original suite of producer statements has been revised at the date of this form to ensure standard use within the industry.

The producer statement system is intended to provide Building Consent Authorities (BCAs) with part of the reasonable grounds necessary for the issue of a Building Consent or a Code Compliance Certificate, without necessarily having to duplicate review of design or construction monitoring undertaken by others.

PS1 DESIGN: Intended for use by a suitably qualified independent engineering design professional in circumstances where the BCA accepts a producer statement for establishing reasonable grounds to issue a Building Consent;
PS2 DESIGN REVIEW: Intended for use by a suitably qualified independent engineering design review professional where the BCA accepts an independent design professional's review as the basis for establishing reasonable grounds to issue a Building Consent;
PS3 CONSTRUCTION: Forms commonly used as a certificate of completion of building work are Schedule 6 of NZS 3910:2013 or Schedules E1/E2 of NZIA's SCC 20112
PS4 CONSTRUCTION REVIEW: Intended for use by a suitably qualified independent engineering construction monitoring professional who either undertakes or supervises construction monitoring of the building works where the BCA requests a producer statement prior to issuing a Code Compliance Certificate.
This must be accompanied by a statement of completion of building work (Schedule 6).
The following guidelines are provided by ACE New Zealand and Engineering New Zealand to interpret the Producer Statement.

Competence of Engineering Professional
This statement is made by an engineering firm that has undertaken a contract of services for the services named, and is signed by a person authorised by that firm to verify the processes within the firm and competence of its personnel.
The person signing the Producer Statement on behalf of the engineering firm will have a professional qualification and proven current competence through registration on a national competence-based register such as a Chartered Professional Engineer (CPEng).
Membership of a professional body, such as Engineering New Zealand provides additional assurance of the designer's standing within the profession. If the engineering firm is a member of ACE New Zealand, this provides additional assurance about the standing of the firm.
Persons or firms meeting these criteria satisfy the term "suitably qualified independent engineering professional".
Professional Indemnity Insurance
As part of membership requirements, ACE New Zealand requires all member firms to hold Professional Indemnity Insurance to a minimum level.
The PI Insurance minimum stated on the front of this form reflects standard practice for the relationship between the BCA and the engineering firm.
Professional Services during Construction Phase
There are several levels of service that an engineering firm may provide during the construction phase of a project (CM1-CM5 for engineers3).
The BCA is encouraged to require that the service to be provided by the engineering firm is appropriate for the project concerned.
Requirement to provide Producer Statement PS4
BCAs should ensure that the applicant is aware of any requirement for producer statements for the construction phase of building work at the time the building consent is issued. No design professional should be expected to provide a producer statement unless such a requirement forms part of the Engineering Design Firm's engagement.
Refer Also:
1 Conditions of Contract for Building & Civil Engineering Construction NZS 3910: 2013
2 NZIA Standard Conditions of Contract SCC 2011
3 Guideline on the Briefing & Engagement for Consulting Engineering Services (ACE New Zealand/Engineering New Zealand 2004)
4 PN01 Guidelines on Producer Statements
www.acenz.org.nz
www.engineeringnz.org

RS Eng Ltd

09 4383273
office@RSEng.co.nz
2 Seaview Road,
Whangarei, 0110

Inspection No. 1

File No. 17644

Date 20 July 2021

Time 11:55 AM

Site Inspection Sheet

Health & Safety

Site Induction Completed N/A

Task to be completed
Stripped site

Significant site risks associated with task
Slips, trips and falls

Controls for risk
Be aware

Inspection Details

Project New Dwelling -

Purpose of Inspection Stripped site

Site Address (Lot 8) Sampsons Way, Dargaville

Additional Contact Email No

Comments
The building area was adequately stripped to the hardpan layer maximum depth approx. 300mm BGL. Shear Vanes were taken across the surface recording greater than 85kPa. One small softer area was encountered approximately 50mm to 100mm in depth overlying the hardpan layer, this was due to the hardpan being uneven and perching in areas, this is to be left to prevent the hardpan layer being broken. Ok to proceed with geogrid and hardfill.

Email of Engineer codie@rseng.co.nz

Name of Engineer Codie Hay

Signature

Upload Photos

RS Eng Ltd

09 4383273
office@RSEng.co.nz
2 Seaview Road,
Whangarei, 0110

File No. 17644

Date 29 July 2021

Time 11:15 AM

BC No. 210208

Site Inspection Sheet

Health & Safety

Site Induction Completed Yes

Task to be completed
Hardfill test

Significant site risks associated with task
No

Controls for risk
N/A

Accidents or near misses
No

Inspection Details

Project New Dwelling - GJ Gardner Homes - Randall

Purpose of Inspection Hardfill test

Site Address Lot 8, Sampsons Way, Dargaville

Name of Contact Georgia

Contact Email Address georgia.witt-green@gjgardner.co.nz

Additional Contact Email No

Comments
Hardfill completed for building platform. Geotexile mat placed before filling. Perimeter drains installed. Clegg testing indicates adequate compaction with values over 21. Scala penetrometer testing in deep areas of hardfill indicates ultimate bearing capacities over 300kPa. Ok to proceed with RibRaft preparation.

Action Required?

No

Next Inspection	RibRaft pre-pour
Email of Engineer	iain@rseng.co.nz
Name of Engineer	Iain Mackay
Signature	

Upload Photos

RS Eng Ltd

09 4383273
office@RSEng.co.nz
2 Seaview Road,
Whangarei, 0110

File No. 17644

Date 6 August 2021

Time 3:00 PM

BC No. BC210208

Site Inspection Sheet

Health & Safety

Site Induction Completed Yes

Task to be completed
RibRaft inspection

Significant site risks associated with task
Slips, trips and falls

Controls for risk
PPE
Be aware

Accidents or near misses
No

Inspection Details

Project New Dwelling - Randell

Purpose of Inspection RibRaft inspection

Site Address Lot 8, Sampsons Way, Dargaville

Name of Contact Aaron Bates

Contact Email Address Aaron@abfoundations.co.nz

Additional Contact Email No

Comments
3 x HD12 bottom, 1x HD12 top in edge beam with brick rebate.

Internal beam steel and laps okay.

SE72 mesh used.

Garage door rebate detail shows two HD12 at top of footing, an extra bar needs to be added to the top.

Double pipe penetration needs trimmer bars added around perimeter.

re-entrant bars at internal corners are touching pods. Bars need to be lifted approx. 10mm.

Photos to be provided once completed.

Action Required?

As above

Next Inspection	TBC
Email of Engineer	liam@rseng.co.nz
Name of Engineer	Liam Fuller
Signature	

Upload Photos

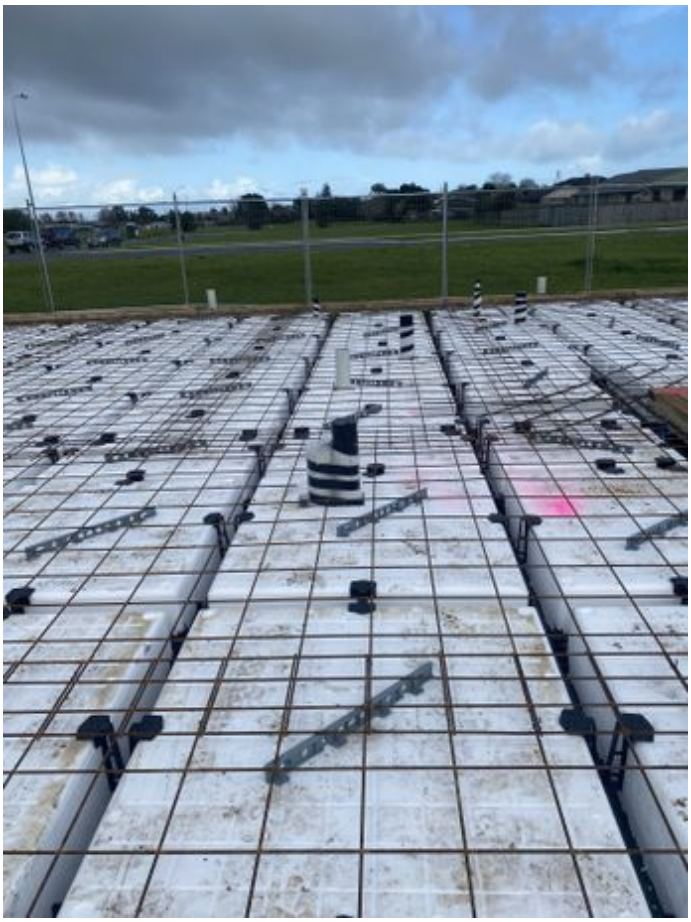

Memorandum from Licensed Building Practitioner: Record of building work

Section 88, Building Act 2004

THE BUILDING

Street address:	LOT 8 8 SAMPSON WAY
Suburb:	
Town/City: WARKWORTH	Postcode:

THE PROJECT

Building consent number: 210208

THE OWNER(S)

Name(s):	RACHEL EDGE
Mailing address:	LOT 8 8 SAMPSON WAY
Suburb:	PO Box/Private Bag:
Town/City: WARKWORTH	Postcode:
Phone number:	Email address:

RECORD OF WORK THAT IS RESTRICTED BUILDING WORK

PRIMARY STRUCTURE

Work that is restricted building work ✓ Tick	Description of restricted building work If necessary, describe the restricted building work	Carried out or supervised Tick ✓ whether you carried out the RBW or supervised someone else.
○ Foundations and subfloor framing	N/A	○ Carried out ○ Supervised
○ Walls	FRAMING.	○ Carried out ✓ Supervised
○ Roof	N/A	○ Carried out ○ Supervised
○ Columns and beams		○ Carried out ○ Supervised
✓ Bracing	GIB BOARD.	○ Carried out ○ Supervised
○ Other	N/A	○ Carried out ○ Supervised

White – Council Copy Yellow – Home Owner's copy Blue – Builder's Copy

RECORD OF WORK THAT IS RESTRICTED BUILDING WORK

EXTERNAL MOISTURE MANAGEMENT SYSTEMS

Damp proofing ○		○ Carried out ○ Supervised
Roof cladding or roof cladding system ○		○ Carried out ○ Supervised
Ventilation system (for example, subfloor or cavity) ○		○ Carried out ○ Supervised
Wall cladding or wall cladding system ○		○ Carried out ○ Supervised
Waterproofing ○		○ Carried out ○ Supervised
Other ○		○ Carried out ○ Supervised

ISSUED BY

Name and contact details of the licensed building practitioner who is licensed to carry out or supervise restricted building work.

Name: JOHN THOMSON	LBP number: BP 114264.
Class(es) licensed in: CARPENTRY	SITE 2
Plumbers, Gasfitters and Drainlayers registration number (if applicable):	—
Mailing address (if different from below):	—
Street address/Registered office:	—
Suburb: TE MAI.	Town/City: WHANGAREI.
PO Box/Private Bag: 1023.	Postcode: 0143.
Phone number: 09 4302780	Mobile: 0274780184.
After hours:	Fax:
Email address:	Website:

DECLARATION

I JOHN THOMSON carried out or supervised the restricted building work recorded on this form.

Signature: _____ Date: 22/2/2022

White – Council Copy Yellow – Home Owner's copy Blue – Builder's Copy

Memorandum from Licensed Building Practitioner

Record of Building Work

Section 88, Building Act 2004

GERARD CERTIFIED ROOFER

BC 210208

The Building Rachyl Edge and Regan Randell

Street Address: 8 Sampsons Way		
Suburb:	Town/City: Dargaville	Postcode: 0310

External Moisture Management System

Work that is restricted building work	Description of restricted building work	Carried out or supervised?
☑ Roof cladding or roof cladding system	Installation of Gerard Roofs pressed steel tiles and accessories per manufacturer's specification.	☐ Carried out ☑ Supervised

Issued By

Name and contact details of the licensed building practitioner who is licensed to carry out or supervise restricted building work

Name: Lucas Hardwick		LBP Number: BP 131196
Class(es) licensed in: Roofing R2 R3		
Address: Po Box 4282		Phone: 027 418 4459
Suburb: Kamo		Fax:
Town/City: Whangarei	Postcode: 0141	Mobile:
Mailing Address: ☐ Same as above?		After Hours Phone:
Suburb:		
Town/City:	Post Code:	
Email Address: johnduffroofing@gmail.com		
Website:		

Declaration

I carried out or supervised the restricted work recorded on this form.

Name	Signature	Date
Lucas Hardwick	Lucas Hardwick	18/10/2021

KAIPARA DISTRICT

Kaipara te Oranganui • Two Oceans Two Harbours

KAIPARA DISTRICT COUNCIL

Producer Statement Construction (PS3)

Construction

ISSUED BUILDING CONSENT NUMBER: BC 210208

THIS PS3 IS ISSUED BY: John Duff Roofing

TO: **KAIPARA DISTRICT COUNCIL**

IN RESPECT OF: Rachyl Edge and Regan Randell

AT (Address): 8 Sampson Way

Dargaville

LEGAL DESCRIPTION - LOT.....DP .....SO .....

FROM: Luke Hardwicke (Installer),

LICENSED BY John Duff Roofing Reg./License No: BP 131196

engaged by GJ Gardner (Owner/Builder)

In respect of clause(s) B1 and B2 of the Building Regulations 1992 for the building work described by the drawings and specifications prepared by the design firm titled;

Battens fixed as per consented plans

numbered.....

.....

authorised variation(s).....(copies attached)

have been issued during the course of the works.

I have sighted the issued building consent and read the conditions. As the contractor/builder I can confirm that the building works have been carried out in accordance with the requirements of the New Zealand Building Code, the conditions of the building consent, the design drawings and specifications and in accordance with the listed variations (if any).

I understand that if this producer statement is accepted, that it may be used to verify that the building work All / Part only as specified in the attached particulars, the subject of this building consent meets, based on reasonable grounds, the requirements of this building consent and the requirements of the Building Code in respect to clauses B1, B2, ...of the Building Regulations 1992.

☑ I understand and accept that Council may rely on this document, for the purposes of establishing compliance with the above building consent and that the content including the signature, whether electronic or not, is truly representative and authoritative of the information contained.

Name: Luke Hardwicke Signature: Date: 18/10/2021

Address: PO Box 4282 Kamo

Contractor/Applicator: John Duff Roofing

Telephone: .....(bus) 027 478 4459 (home) Fax .....

File: 3117.03

NZ BRICK & BLOCKLAYERS FEDERATION

Memorandum from licensed building practitioner:
Record of building work
Section 88, Building Act 2004, Form 6A

JOB No. ROW No. 07025

INVOICE No.

TROWEL TRADES SUPA-CENTRE

The Building

Street address of building: 8 Sampsons Way dargaville

The Project

Building consent number:

The Owner

Name: R Edge	Address:
Telephone:	
Email:	

Record of Work that is Restricted Building Work

Work that is restricted building work		Description	Carried out / supervised
Primary structure			
Foundations and subfloor framing	[ ]		[ ] Carried out [ ] Supervised
Walls	[ ]		[ ] Carried out [ ] Supervised
Columns and beams	[ ]		[ ] Carried out [ ] Supervised
Other	[ ]		[ ] Carried out [ ] Supervised
External moisture management systems			
Damp proofing & penetrations	[ ]		[ ] Carried out [ ] Supervised
Wall cladding or wall system	[✓]	Brick Walls	[✓] Carried out [ ] Supervised
Other	[ ]		[ ] Carried out [ ] Supervised

Issued by

Name: David Winters	
LBP number: 124899	Class(es) licensed in: B1 + B2
Mailing address: 47 toronn Lane Waipu	
Street address or registered office:	
Telephone: Landline:	Mobile: 021 0443944
Daytime:	After hours:
Facsimile:	Email:

Declaration

David Winters *(name of practitioner)*

carried out or supervised the restricted building work recorded on this form.

Signature: [signature] Date: 20/12/21

WHITE COPY - TA BLUE COPY - HOMEOWNER GREEN COPY - TRADESMAN

Combined Certificate of Compliance and Electrical Safety Certificate

Unique ID: 13700

Note: If you are using this form to provide only an Electrical Safety Certificate, then only complete sections 1, 3 and 5

1. Customer Information

Customer Name: SUGFELT CONSTRUCTION LTD (EXCEL / RANDELL)

Customer Phone / Email:

Location of Installation: 8 SAMPSONS WAY, JARGAVILLE

2. Certifier Information

Certifier Name: KEITH DONALDSON Registration / Practising Licence Number: E281109

Organisation: LABER ELECTRICAL Telephone Number: (09) 438 1686

Email: LEWAKEITH@GMAIL.COM

Name and Registration Number of person(s) involved in work and supervised by certifier: NOAH DAVIS

3. Details of work to which certificate applies

The work is: ☑ an entire installation ☐ a specific part of an installation

The work is: ☑ High Risk ☐ General ☐ Low Risk (Certificate of Compliance not required)

Indicate the number of each item installed or altered:

Number of lighting outlets:	25
Number of socket outlets:	24
Number of ranges:	2
Number of water heaters:	1

General Description of Work: PRE-WIRE & FIT OFF OF NEW INSTALLATION AS PER PLAN INCLUDING MAINS, HWB, OWN & HOT WATER

Tick (✓) if work includes:

- ☑ Mains
- ☑ MEN switchboard closest to point of supply
- ☑ Main Earthing System
- ☐ Electric Lines

Period within / Date on which the work was done: 09.03 2022

The work is safe to be connected to: ☑ 230/400V MEN System ☐ Other (specify)

4. Certificate of Compliance

I am satisfied that the work to which this Certificate of Compliance applies has been done lawfully and safely and the information in this certificate is correct. The work:

- ☐ complies with Part 1 of AS/NZ 3000 ☑ complies with Part 2 of AS/NZ 3000
- ☑ complies with the following standard(s): AS/NZS 3000:2007
- ☐ has been installed in accordance with a certified design (attach or reference*)
- ☑ has an earthing system that is correctly rated
- ☑ contains fittings which are safe to connect to a power supply
- ☐ relies on supplier's Declaration of Conformity (attach or reference*)
- ☐ relies on manufacturer's instructions (attach or reference*)
- ☑ has been satisfactorily tested in accordance with Electricity (Safety) Regulations 2010
- ☑ is safe to connect

Test Results:

	Electrical Worker	Inspector
Polarity (independent earth):	✓	
Insulation resistance:	>500MΩ	
Earth continuity:	0.01Ω	
Bonding:	✓	
Other (specify): EPL	0.47Ω	
	1370	

Electronic reference:

Certifier's Signature: Date: 9.4.22

** If it is impractical to attach a copy of any relevant certified design, manufacturer's instruction or supplier declaration of conformity, provide a reference to where the documents can be found, in a readily accessible format, through electronic means.*

5. Electrical Safety Certificate

Date on which the connection was done: 9.4.22

I am satisfied that the work to which this Electrical Safety Certificate applies is connected to a power supply and is safe to use

Name: KEITH DONALDSON Registration / Practising License Number: E281109

Signature of Connector: Date: 9.4.22

KAIPARA DISTRICT

Kaipara te Oranganui • Two Oceans Two Harbours

KAIPARA DISTRICT COUNCIL

Producer Statement Water Proof Construction (PS3B)

Water Proof Construction

ISSUED BUILDING CONSENT NUMBER **BC210208**

THIS PS3b IS ISSUED BY: Elegant Spaces

TO: **KAIPARA DISTRICT COUNCIL**

IN RESPECT OF: **R Edge and R Randell**

AT (Address): **Lot 8, 8 Sampsons Way, Dargaville**

LEGAL DESCRIPTION - LOT……DP ……..SO ……..…….

FROM: Luke Roberts (Water Proof membrane Applicator),

LICENSED BY SIKA NZ Reg./License No: 1279

engaged by **GJ Whangarei** (Owner/Builder)

In respect of clause(s) E2 and E3 and B2 of the Building Regulations 1992 for the building work described by the drawings and specifications prepared by the design firm titled;

Internal Waterproofing

numbered……..…

I have sighted the issued building consent and sighted the waterproofing details and have inspected the substrate to which the membrane is to be applied and found it to be satisfactory. As a licensed water proof membrane applicator I can confirm that the application of the membrane has been carried out in accordance with the requirements of the New Zealand Building Code, the manufacturer's specifications and requirements.

I understand that if this producer statement is accepted, that it may be used to verify that the building work All / Part only as specified in the attached particulars, the subject of this building consent meets, the requirements of this building consent and the requirements of the Building Code in respect to clauses E2 and E3 and B2 of the Building Regulations 1992.

☑ I understand and accept that Council may rely on this document, for the purposes of establishing compliance with the above building consent and that the content including the signature, whether electronic or not, is truly representative and authoritative of the information contained.

Name: Luke Roberts ……..Signature: 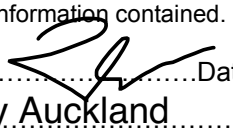 ……Date: **09/03/22**

Address: 13/8 Henry Rose Place, Albany Auckland

Contractor/Applicator: Elegant Spaces

Phone: 0276524887 ….(bus.) ……..(home) Fax ……

Please find attached the 15 year product and the 5 year workmanship warranties to the property owners.

File: 3117.03

PRODUCT WARRANTY
Sikalastic®-220 W

BUILDING TRUST

This warranty form is only to be used for projects involving up to 50 square metres of installed Sikalastic®-220 W

Warranty Number:	**SW** 8839
Project Name:	
Full Project Address:	Lot 8, 8 Sampsons Way, Dargaville
Client Name: (who the warranty is made out to)	R Edge & R Randell
Product installation completion date:	8th March 2022
Applicator: (Name of company and/or individual)	Luke Roberts - Elegant Spaces Ltd
Sika Applicator/License No.:	1279
Total area of product installed in m²:	2m²
Where was the product installed? e.g. ensuite	Bathroom bath face and splashback
Proof of purchase: e.g. Invoice No.(s)	Invoice No 7213441
Store and area purchased from: e.g. Tile King, Warkworth	Tile Depot Whangarei
Today's Date:	10/03/2022

1 Sika (NZ) Limited ("Sika") hereby warrants that Sikalastic-220 W (the Product) supplied for use on the above project will conform with the technical data detailed on the Sikalastic-220 W Data Sheet (the current version at the time of purchase) for a period of ten (10) years from the date of purchase by the original purchaser. A claim pursuant to this Warranty must be notified to Sika in writing within 10 years from the date the product was first sold to the original purchaser.

2 This warranty is only valid when accompanied by proof of purchase of sufficient quantity of Product for its correct installation, in accordance with the Product data sheet, over the area (in square metres) referenced above.

3 This Warranty is provided on the basis that the Product is stored, transported, used, installed, applied and maintained in strict accordance with the instructions contained in the Data Sheet, and any other written instructions (if any) that may be provided by Sika, and that the Product is used within its stated shelf life. Failure to comply with such instructions will invalidate this Warranty.

4 In the event that it is proved to the complete satisfaction of Sika that the Product does not conform with the technical data detailed on the Data Sheet, Sika will, on request made in writing to the Head Office of Sika, at the sole and absolute discretion of Sika either:

(a) supply free-of-charge replacement Product, for any Product that is proved not to so conform; or

(b) refund the purchase price of the Product that is proved not to so conform.

5 Sika shall not be liable for any other claims for loss, damage, costs or expenses of any kind arising out of or attributable to any breach by Sika of the Warranty or negligence or otherwise howsoever and whether direct or consequential in connection with the use of the Product.

6 Sika shall only be liable under this Warranty if notice has been given in writing within seven (7) days (time being of the essence) of any failure or defect of the Product becoming apparent or known. The notice shall include proof of purchase (showing date and place of purchase and name of the reseller). The Claimant shall ensure that Sika is afforded the opportunity to inspect the area affected as soon as practicable after such notification.

7 Save for this Warranty, Sika makes no representation and gives no assurance, condition or warranty of any kind (including any assurance, condition or warranty implied by law to the extent that the assurance, condition or warranty can be lawfully excluded) in relation to the Product and accepts no liability for any assurance, condition, warranty, representation, statement or term not expressly set out in this Warranty. Where the Product is being acquired for business purposes, the provisions of the Consumer Guarantees Act 1993 are specifically excluded.

8 This Warranty replaces and supersedes (1) the limited warranty stated in Sika's Terms and Conditions of Sale (but all other such Terms and Conditions shall not be affected hereby) and (2) all prior warranties that may appear to apply to the Product.

9 This Warranty is only applicable to product quality as defined by the Product Data Sheet and specifically excludes any defects or failures to the extent that they are attributable to building design or workmanship, including product application, preparation or installation of surfaces or substrates by the Claimant or any other party.

10 This Warranty does not cover the effects of movement (opening, closing, or differential) in any horizontal or vertical joint or crack, beyond the capability of the Product, as defined in the Data Sheet, and any other written instructions supplied by Sika, or any visual effects of such movement.

11 This Warranty excludes any damage caused by fair wear and tear, including fading.

12 This Warranty will be invalidated in the event that any remedial work is undertaken in relation to the Product without the prior written approval of Sika.

13 This Warranty shall extend to any replacement quantities of the Product provided but only for the balance of the original Warranty period.

14 This warranty is provided to the original purchaser of the Product and is not transferable or assignable, except to the owner of the property.

15 If any alleged failure or deterioration in the Product is proven to not be the responsibility of Sika, then all costs associated with the investigation of such failure or deterioration shall be borne by the Claimant.

Tony Smith
Business Manager - Distribution

Mike Edwards
General Manager

Asbuilt Crowe Plumbing

Kaipara District Council
Approved Building Consent Document
BC210208 - Pg 7 of 29
2/07/2021 ComplyNZ

4/08/21

REFER TO SITE PLAN FOR SW AND SS CONNECTION POINTS

KEY:

ORG	OVERFLOW RELIEF GULLY
TV	TERMINAL VENT
DP	DOWN PIPE
RE	RODDING EYE
IP	INSPECTION POINT

TABLE 6.5.1
MINIMUM GRADES OF DISCHARGE PIPES

40mm ø	1:40 (2.5%)	25mm PER METER
65mm ø	1:40 (2.5%)	25mm PER METER
100mm ø	1:60 (1.65%)	17mm PER METER

FIXTURES & WASTE PIPE SIZING

WC =	100ø OUTLET
SHOWER =	40ø TRAP TO 65ø WASTE
BASIN =	40ø TRAP TO 65ø WASTE
SINK =	40ø TRAP TO 65ø WASTE
TUB =	40ø TRAP TO 65ø WASTE

NOTES:

PLUMBING TO NZBC G13/AS3 NZS3500.2
ALL WASTE PIPES PVC. SIZES, FALL, VENTING & DISCHARGE TO BE CONFIRMED BY NZ QUALIFIED PLUMBER.

WATER SUPPLY:

INTERNAL WATER PIPES TO BE POLYBUTYLENE

A POTABLE WATER SUPPLY SYSTEM SHALL BE -
(a) PROTECTED FROM CONTAMINATION; AND
(b) INSTALLED IN A MANNER WHICH AVOIDS THE LIKELIHOOD OF CONTAMINATION WITHIN THE SYSTEM AND THE WATER MAIN; AND
(c) INSTALLED USING COMPONENTS THAT WILL NOT CONTAMINATE WATER

TABLE 3.9.3.1
SIZE AND RATING OF VENTS

50ø TV FOR <30 FIXTURE UNITS
65ø TV FOR <175 FIXTURE UNITS

BATHROOM GROUP = 6 (x2)
SINK = 1 (x1)

BASIN = 1 (x1) (ADDITIONAL WC BASIN)

TUB = 5 (x1)
DISHWASHING MACHINE = 3 (x1)

=22

TABLE 4.6.3
MAXIMUM UNVENTED LENGTH OF WASTE PIPE

-BASIN OR BIDET WITH 40ø TRAP AND WASTE	3.5m
-ALL OTHER WASTE FIXTURES AND FLOOR WASTE GULLIES WITH 50ø OR SMALLER WASTE PIPES	6.0m
-FLOOR WASTE GULLIES AND FIXTURES WITH 65ø OR LARGER WASTE PIPES	10.0m

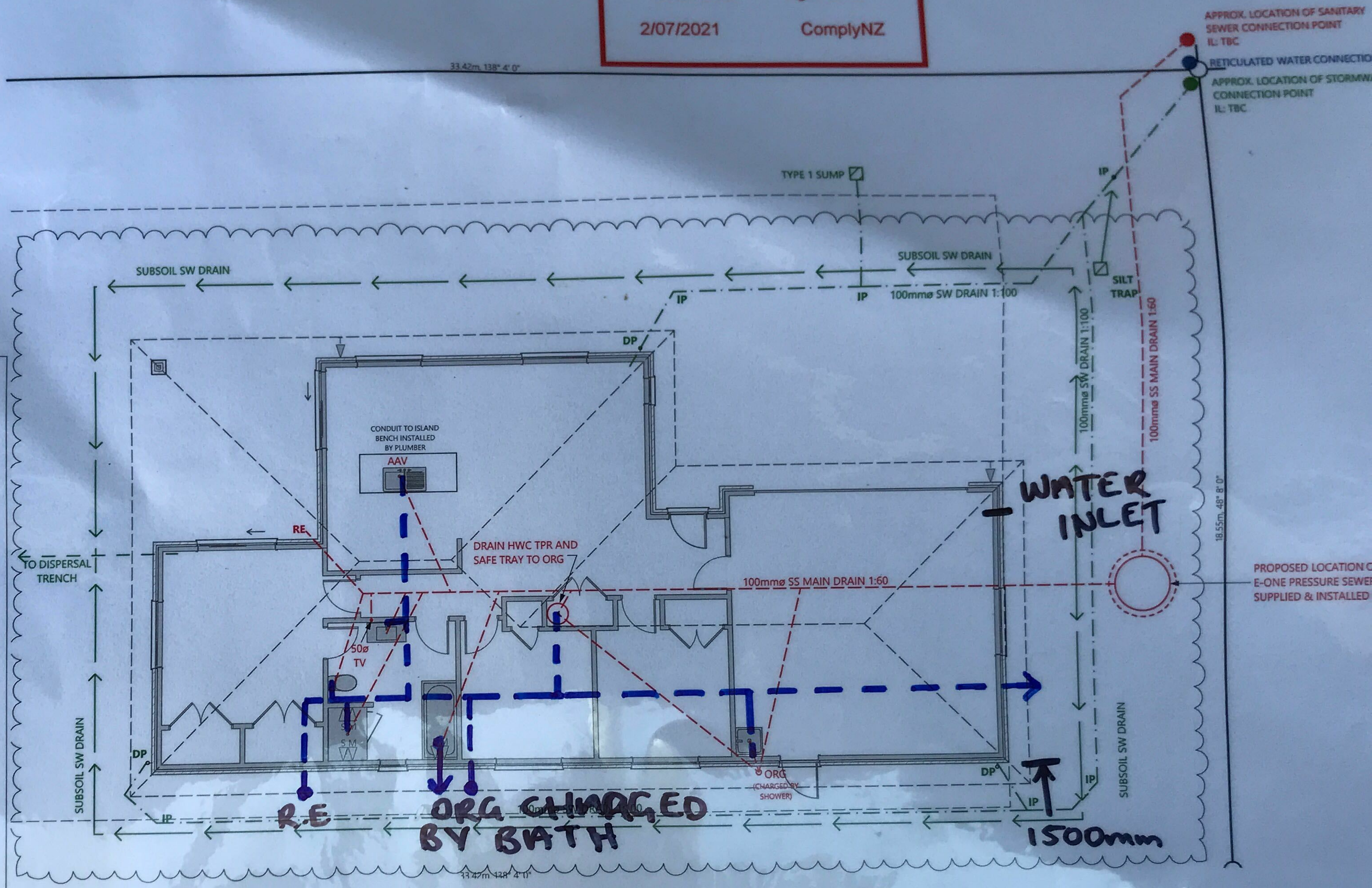

G.J. Gardner. HOMES

COPYRIGHT - THIS DRAWING REMAINS THE PROPERTY OF G.J. GARDNER HOMES AND IS PROVIDED FOR THE USE DESCRIBED AND MAY NOT BE USED OR REPRODUCED IN WHOLE OR IN PART WITHOUT PERMISSION

SUDFELT CONSTRUCTION LTD
WHANGAREI / KAIPARA
FRANCHISEE FOR
G.J.GARDNER HOMES
14 PERCY STREET,
KENSINGTON
P (09) 437 5666
www.gjgardner.co.nz

ALL CONSTRUCTION TO COMPLY WITH THE LOCAL AUTHORITY REQUIREMENTS, NZ BUILDING CODE/APPROVED DOCUMENTS, AND MEANS OF COMPLIANCE, INCL. NZS3604:2011

ALL DIMENSION AND LEVELS ARE TO BE CHECKED BY CONTRACTOR PRIOR TO COMMENCEMENT OF WORK. CONTRACTOR TO REPORT ANY DISCREPANCY.

DO NOT SCALE OFF PLANS

NEW DWELLING FOR
EDGE & RANDELL
LOT 8 SAMPSONS WAY
DARGAVILLE
KAIPARA

CONSENT

LEGAL DESCRIPTION
LOT NUMBER: 8
DP NUMBER: 542244

SITE INFORMATION
SITE AREA: 619m²
CORROSION: C
DISTRICT PLAN ZONE: RESIDENTIAL
WIND ZONE: HIGH

PLUMBING & DRA

JOB No:	390076
SHEET SIZE:	A3
SCALE:	1:100
DRAWN:	C. LIENERT
PUBLISHED:	30/06/2021

Memorandum from licensed building practitioner: Record of building work

Section 88, Building Act 2004

THE BUILDING

Street address: 8 Sampsons Way	
Suburb:	
Town/City: Dargaville	Postcode:

THE PROJECT

Building consent number: 210208

THE OWNER(S)

Name(s): Rachyl Edge and Regan Randell	
Mailing address: 8 Sampsons Way	
Suburb:	PO Box/Private Bag:
Town/City: Dargaville	Postcode:
Phone number:	Email address:

RECORD OF WORK THAT IS RESTRICTED BUILDING WORK

PRIMARY STRUCTURE

Work that is restricted building work	Description of restricted building work	Carried out or supervised
Tick ✓	If necessary, describe the restricted building work	Tick ✓ whether you carried out the work or supervised someone else.
Foundations and subfloor framing ☑	Constructed ribraft floor as per consented plans only	☑ Carried out ◯ Supervised
Walls ◯		◯ Carried out ◯ Supervised

PRIMARY STRUCTURE CONT'D			
Roof	◯	n/a	◯ Carried out ◯ Supervised
Columns and beams	◯	n/a	◯ Carried out ◯ Supervised
Bracing	◯	n/a	◯ Carried out ◯ Supervised
Other	◯	n/a	◯ Carried out ◯ Supervised

RECORD OF WORK THAT IS RESTRICTED BUILDING WORK

EXTERNAL MOISTURE MANAGEMENT SYSTEMS

Damp proofing	✓	Laid polythene with tape under ribraft floor	◉ Carried out ◯ Supervised
Roof cladding or roof cladding system	◯	n/a	◯ Carried out ◯ Supervised
Ventilation system (for example, subfloor or cavity)	◯	n/a	◯ Carried out ◯ Supervised

EXTERNAL MOISTURE MANAGEMENT SYSTEMS CONT'D

Wall cladding or wall cladding system ◯		◯ Carried out ◯ Supervised
Waterproofing ◯		◯ Carried out ◯ Supervised
Other ◯		◯ Carried out ◯ Supervised

ISSUED BY

Name and contact details of the licensed building practitioner who is licensed to carry out or supervise restricted building work.

Name: Aaron Bates	LBP number: 114872
Class(es) licensed in: Carpentry	
Plumbers, Gasfitters and Drainlayers registration number (if applicable):	
Mailing address (if different from below):	
Street address/Registered office: 33 Neptune Drive	
Suburb: Whangarei Heads	Town/City: Whangarei
PO Box/Private Bag:	Postcode: 0174
Phone number:	Mobile: 021410428
After hours:	Fax:
Email address: aaronbatesbuilders@gmail.com	Website:

DECLARATION

I Aaron Bates carried out or supervised the restricted building work recorded on this form.

Signature: _____ Date: 10/08/2021

Memorandum from Licensed Building Practitioner:
Record of building work
Section 88, Building Act 2004

PlaceMakers® Know how. Can do.

THE BUILDING

Street address:	LOT 8 8 SAMPSON WAY
Suburb:	
Town/City: WARKAVILLE	Postcode:

THE PROJECT

Building consent number: 210208

THE OWNER(S)

Name(s):	RACHEL EDGE
Mailing address:	LOT 8 8 SAMPSON WAY
Suburb:	PO Box/Private Bag:
Town/City: WARKAVILLE	Postcode:
Phone number:	Email address:

RECORD OF WORK THAT IS RESTRICTED BUILDING WORK

PRIMARY STRUCTURE

Work that is restricted building work Tick (✓)	Description of restricted building work If necessary, describe the restricted building work	Carried out or supervised Tick (✓) whether you carried out the RBW or supervised someone else.
Foundations and subfloor framing ○	N/A	○ Carried out ○ Supervised
Walls ✓	FRAMING pre nail	○ Carried out ✓ Supervised
Roof ✓	N/A Trusses pre nail	○ Carried out ○ Supervised
Columns and beams ○		○ Carried out ○ Supervised
Bracing ✓	GIB BOARD GJ1 & EP1	○ Carried out ○ Supervised
Other ○	N/A	○ Carried out ○ Supervised

White – Council Copy Yellow – Home Owner's copy Blue – Builder's Copy

RECORD OF WORK THAT IS RESTRICTED BUILDING WORK

EXTERNAL MOISTURE MANAGEMENT SYSTEMS

Damp proofing ☑	Mulseal to brick rebate.	○ Carried out ○ Supervised
Roof cladding or roof cladding system ○		○ Carried out ○ Supervised
Ventilation system (for example, subfloor or cavity) ○		○ Carried out ○ Supervised
Wall cladding or wall cladding system ○		○ Carried out ○ Supervised
Waterproofing ☑	DPC windows	○ Carried out ○ Supervised
Other ○		○ Carried out ○ Supervised

ISSUED BY

Name and contact details of the licensed building practitioner who is licensed to carry out or supervise restricted building work.

Name: JOHN THOMSON	LBP number: BP 114264.
Class(es) licensed in: CARPENTRY	SITE 2
Plumbers, Gasfitters and Drainlayers registration number (if applicable):	—
Mailing address (if different from below):	—
Street address/Registered office:	—
Suburb: TE MAI.	Town/City: WHANGAREI.
PO Box/Private Bag: 1023.	Postcode: 0143.
Phone number: 09 4302780	Mobile: 027478 0184.
After hours:	Fax:
Email address:	Website:

DECLARATION

I JOHN THOMSON carried out or supervised the restricted building work recorded on this form.

Signature: _____ Date: 22/2/2022

Page 2

White – Council Copy Yellow – Home Owner's copy Blue – Builder's Copy

EXTRA
TOUCH
Wipes

Form 7
Code compliance certificate

Section 95, Building Act 2004

The building

Street address of building:	8 Sampsons Way, Dargaville
Legal description of land where building is located:	Lot 8 DP 542244
Building name:	N/A
Location of building within site/block number:	8 Sampsons Way Dargaville
Level/unit number:	0
Current, lawfully established, use:	2.0 Housing: 2.0.2 Detached Dwelling with 2 occupants
Year first constructed:	2021

The owner

Name of owner:	Rachyl Edge and Regan Randell
Contact person:	Rachyl Edge
Mailing address:	104 Te Kowhai Drive, Maungatapere
Street address/registered office:	N/A
Phone number:	Landline: 094375666 Mobile: N/A
Daytime:	Landline: 094375666 Mobile: N/A
After hours:	Landline: 094375666 Mobile: N/A
Facsimile number:	No information provided
Email address:	rachyledge@gmail.com
Website:	No information provided

First point of contact for communications with the council/building consent authority:
Genna Jones (GJ Gardner); Mailing Address: PO Box 8046
Kensington
Whangarei 0145; Phone: 094375666

Building work

Building consent number:	BC210208
Description:	Construct 3 Bedroom Dwelling with Attached Garage
Issued by:	Kaipara District Council

Code compliance

The building consent authority named below is satisfied, on reasonable grounds, that -
the building work complies with the building consent.

Signature: Aaron Brown
Position: Principal Building Lead
On behalf of: Kaipara District Council
Date: 23 March 2022

Cladding as bracing

12 mm Ecoply (CD face grade or better) can be H3 treated to meet the requirements of Acceptable Solution E2/AS1 and will perform as a structural, durable and weathertight cladding and bracing element when installed in accordance with E2/AS1.

It should be noted smooth faced plywood such as Ecoply may be prone to appearance related issues such as face checking which occurs naturally and is not considered by CHH Woodproducts to be a manufacturing or product fault. For more information refer to section 1.8: General Design Considerations - Face Checks on Plywood Exposed to Weather. H3.2 CCA treated Ecoply may also have a green tinge to the wood surface and may have fillet marks on the face of the sheet.

Plywood for exterior cladding applications where a high visual appearance is desired, CHH Woodproducts recommends the use of Shadowclad as an exterior cladding. Shadowclad has a textured (bandsawn) face which reduces the visibility of face checking and is most commonly H3.1 LOSP treated (clear preservative treatment) which does not leave fillet marks on the panel face.

For further information on Shadowclad as an exterior cladding refer to the current Shadowclad Specification and Installation Guide for Cavity Construction which can be downloaded from www.chhwoodproducts.co.nz.

Soil

Ecoply must not be allowed to come in contact with soil. The bottom edge of the plywood sheet must be a minimum of 100 mm above decks or paved ground and a minimum of 175 mm above unprotected ground.

Service penetrations in bracing elements

Small openings (e.g. power outlets) of 90 x 90 mm or less may be placed no closer than 90 mm to the edge of the braced element, or waste pipe outlets of max. 150 mm diameter placed at no closer than 150 mm to the edge of the braced element.

3.2 ECOPLY® BRACING SPECIFICATIONS SUMMARY

CHH Woodproducts has a range of bracing specifications called the EP bracing series. The EP bracing series simplifies the design and construction of bracing elements using plywood, by itself or in conjunction with GIB® Plasterboard and features:

- Single sided and double sided bracing elements High performance bracing element utilising GIB® Standard plasterboard
- A single type, GIB Handibrac®, hold-down for all bracing elements
- Specifications for each bracing element type

Table 9: Summary P21 Ratings for 2.4m High Ecoply® Wall Elements

Specification No.	Minimum Wall Length	Lining Requirements	BUs/m Wind	BUs/m Earthquake
EP1	0.4 m	Ecoply one side	80	95
	0.6 m		95	105
	1.2 m		120	135
EPG	0.4 m	Ecoply one side and 10 mm GIB® Standard plasterboard other side	100	115
	1.2 m		150	150

Note: Bracing and other technical information has been specifically tested using Ecoply branded structural plywood. This information cannot be used with any other plywood brand and bracing data must be sought directly from the specific plywood manufacturer.

More information

The following pages provide a full specification of EP bracing elements. Copies of specifications can be downloaded from www.chhwoodproducts.co.nz

NZS 3604 provides the method of calculating demand on a building. Calculation sheets are available from BRANZ or GIB EzyBrace® software is available as a free download from www.gib.co.nz. Information is available at www.chhwoodproducts.co.nz which can be placed in the custom elements of GIB EzyBrace® for ease of calculation

Ecoply® Bracing Systems are designed to meet the requirements of the NZBC and have been tested and analysed using the P21 method referenced in NZS 3604:2011 listed as an acceptable solution B1/AS1 Structure. Testing was carried out using Ecoply manufactured by Carter Holt Harvey and SG8 timber framing, and GIB® products manufactured by Winstone Wallboards Ltd. Substituting materials may compromise performance of the system. GIB® and GIB HandiBrac® are registered trade marks of Fletcher Building Holdings Ltd.

SEPTEMBER 2015

Asbuilt Crowe Plumbing

Kaipara District Council
Approved Building Consent Document
BC210208 - Pg 7 of 29
2/07/2021 ComplyNZ

4/08/21

REFER TO SITE PLAN FOR SW AND SS CONNECTION POINTS

KEY:

ORG	OVERFLOW RELIEF GULLY
TV	TERMINAL VENT
DP	DOWN PIPE
RE	RODDING EYE
IP	INSPECTION POINT

TABLE 6.5.1
MINIMUM GRADES OF DISCHARGE PIPES

40mm ø	1:40 (2.5%)	25mm PER METER
65mm ø	1:40 (2.5%)	25mm PER METER
100mm ø	1:60 (1.65%)	17mm PER METER

FIXTURES & WASTE PIPE SIZING

WC =	100ø OUTLET
SHOWER =	40ø TRAP TO 65ø WASTE
BASIN =	40ø TRAP TO 65ø WASTE
SINK =	40ø TRAP TO 65ø WASTE
TUB =	40ø TRAP TO 65ø WASTE

NOTES:

PLUMBING TO NZBC G13/AS3 NZS3500.2
ALL WASTE PIPES PVC. SIZES, FALL, VENTING & DISCHARGE TO BE CONFIRMED BY NZ QUALIFIED PLUMBER.

WATER SUPPLY:

INTERNAL WATER PIPES TO BE POLYBUTYLENE

A POTABLE WATER SUPPLY SYSTEM SHALL BE -
(a) PROTECTED FROM CONTAMINATION; AND
(b) INSTALLED IN A MANNER WHICH AVOIDS THE LIKELIHOOD OF CONTAMINATION WITHIN THE SYSTEM AND THE WATER MAIN; AND
(c) INSTALLED USING COMPONENTS THAT WILL NOT CONTAMINATE WATER

TABLE 3.9.3.1
SIZE AND RATING OF VENTS

50ø TV FOR <30 FIXTURE UNITS
65ø TV FOR <175 FIXTURE UNITS

BATHROOM GROUP = 6 (x2)
SINK = 1 (x1)

BASIN = 1 (x1) (ADDITIONAL WC BASIN)

TUB = 5 (x1)
DISHWASHING MACHINE = 3 (x1)

=22

TABLE 4.6.3
MAXIMUM UNVENTED LENGTH OF WASTE PIPE

-BASIN OR BIDET WITH 40ø TRAP AND WASTE	3.5m
-ALL OTHER WASTE FIXTURES AND FLOOR WASTE GULLIES WITH 50ø OR SMALLER WASTE PIPES	6.0m
-FLOOR WASTE GULLIES AND FIXTURES WITH 65ø OR LARGER WASTE PIPES	10.0m

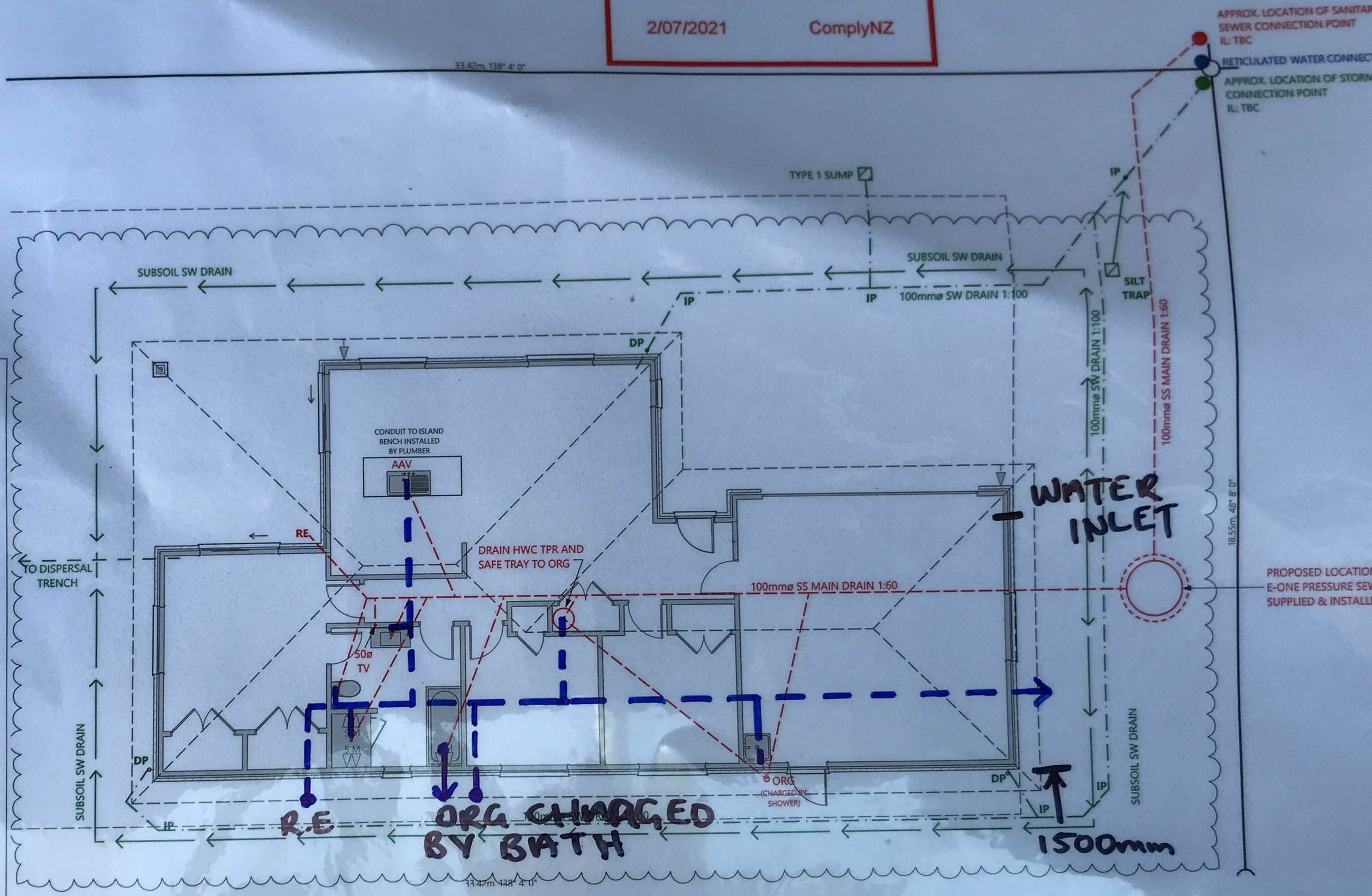

G.J. Gardner. HOMES

COPYRIGHT - THIS DRAWING REMAINS THE PROPERTY OF G.J. GARDNER HOMES AND IS PROVIDED FOR THE USE DESCRIBED AND MAY NOT BE USED OR REPRODUCED IN WHOLE OR IN PART WITHOUT PERMISSION

SUDFELT CONSTRUCTION LTD
WHANGAREI / KAIPARA
FRANCHISEE FOR
G.J.GARDNER HOMES
14 PERCY STREET,
KENSINGTON
P (09) 437 5666
www.gjgardner.co.nz

ALL CONSTRUCTION TO COMPLY WITH THE LOCAL AUTHORITY REQUIREMENTS, NZ BUILDING CODE/APPROVED DOCUMENTS, AND MEANS OF COMPLIANCE, INCL. NZS3604:2011

ALL DIMENSION AND LEVELS ARE TO BE CHECKED BY CONTRACTOR PRIOR TO COMMENCEMENT OF WORK. CONTRACTOR TO REPORT ANY DISCREPANCY.

DO NOT SCALE OFF PLANS

NEW DWELLING FOR
EDGE & RANDELL
LOT 8 SAMPSONS WAY
DARGAVILLE
KAIPARA

CONSENT

LEGAL DESCRIPTION
LOT NUMBER: 8
DP NUMBER: 542244

SITE INFORMATION
SITE AREA: 619m²
CORROSION: C
DISTRICT PLAN ZONE: RESIDENTIAL
WIND ZONE: HIGH

PLUMBING & DRA

JOB No:	390076
SHEET SIZE:	A3
SCALE:	1:100
DRAWN:	C. LIENERT
PUBLISHED:	30/06/2021

File: 17644
7 December 2021
Issue: 1

CONSTRUCTION MONITORING

Sampsons Way, Dargaville

RS Eng Ltd has carried out construction monitoring of building work associated with the new dwelling on Lot 8 DP 542244, as requested by GJ Gardner Homes. Inspections were undertaken by Technicians from RS Eng between 19 July 2021 and 6 August 2021.

The inspections were limited to stripped site, compaction of hardfill and the RibRaft reinforcing steel.

Following the inspections, remedial works were required. This consisted of re-entrant bars needing to be lifted off the pods, 1200mm long HD12 trimmer bars added to double pipe penetrations, and an extra bar added to the top of the garage door rebate. This work was confirmed by photos supplied by the contractor.

This report has been prepared solely for the benefit of our client and the Kaipara District Council. RS Eng Ltd concludes, based on the limited scope outlined above, that the works inspected has been generally completed as per the Building Consent documentation and subsequent instructions. A Producer Statement Construction Review (PS4) covering our inspections is attached.

Prepared by:

Liam Fuller
Engineering Technician

Approved by:

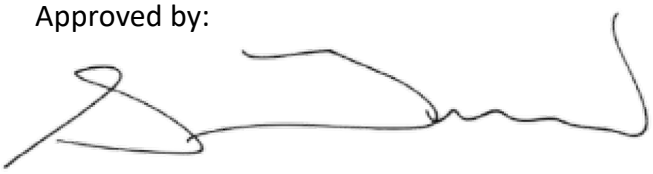

Steve Turner
BE (Civil), CPEng, Int PE, CMEngNZ
Director

RS Eng Ltd

PRODUCER STATEMENT – PS4
CONSTRUCTION REVIEW

Building Code Clause(s):	B1,	Job number: 17644
ISSUED BY: *(Construction Monitoring Firm)*	RS Eng Ltd	
TO: *(Client)*	GJ Gardner Homes - Edge & Randell	
TO BE SUPPLIED TO: *(Building Consent Authority)*	Kaipara District Council	
IN RESPECT OF: *(Description of building work))*	New build	
AT: *(Address))*	Sampsons way, , Dargaville	
LEGAL DESCRIPTION	Lot 8 DP 542244	

We have been engaged by GJ Gardner Homes - Edge & Randell to provide CM2 level of construction monitoring relating to the Clause(s) named above of the Building Code for the building work which is covered by the attached Construction Monitoring Report

- issued by RS Eng Ltd and
- which is described in the documents relating to the Building Consent No. BC210208 and
- those relating to Building Consent Amendment(s) No. N/A

issued during the course of the works.

We have sighted these Building Consents and the conditions attached to them.

Authorised instructions/variation(s) detailed/listed in the attached Schedule have been issued during the course of the works.

On the basis of these review(s) and information supplied by the contractor during the course of the works and on behalf of RS Eng Ltd, I believe on reasonable grounds that the building works covered by the attached Construction Monitoring Report have been completed in accordance with the relevant requirements of the Building Consent and Building Consent Amendments identified above or in the attached Schedule, with respect to Clause(s) B1, of the Building Code. I also believe on reasonable grounds that the persons who have undertaken this construction review have the necessary competence to do so.

I, Steve Turner am:

- CPEng number 87465
- and hold the following qualifications: B.E., CMEngNZ, IntPE(NZ)

RS Eng Ltd holds a current policy of Professional Indemnity Insurance no less than $200,000.

✓ RS Eng Ltd is a member of ACE New Zealand.

SIGNED BY: Steve Turner

(Signature): 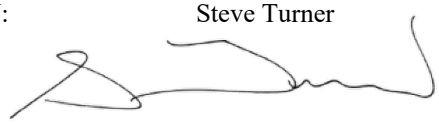 Date: 7/12/2021

Job Number: 17644
Job Address: Sampsons way, , Dargaville
Compilation Date and Time: 06 December 2021 at 9:03 AM

ON BEHALF OF: RS Eng Ltd

Note: This statement has been prepared solely for Kaipara District Council above and shall not be relied upon by any other person or entity. Any liability in relation to this statement accrues to RS Eng Ltd only. As a condition of reliance on this statement, Kaipara District Council accepts that the total maximum amount of liability of any kind arising from this statement and all other statements provided to Kaipara District Council in relation to this building work, whether in tort or otherwise, is limited to the sum of $200,000.

This form is to accompany **Forms 6 or 8** of the **Building (Forms) Regulations 2004** for the issue of a Code Compliance Certificate

SCHEDULE TO PS 4

Please include an itemised list of all referenced documents, drawings, or other supporting materials in relation to this producer statement below:

Limited Scope of Engagement

The engagement is in respect of the following parts of the building work:

As Per RS Eng Construction Monitoring Report - Job No. 17644

GUIDANCE ON USE OF PRODUCER STATEMENTS

Information on the use of Producer Statements and Construction Monitoring Guidelines can be found on either the **ACE New Zealand** or **Engineering New Zealand** websites.

Producer statements were first introduced with the Building Act 1991. The producer statements were developed by a combined task committee consisting of members of the New Zealand Institute of Architects (NZIA), Institution of Professional Engineers New Zealand (now Engineering New Zealand), Association of Consulting and Engineering New Zealand (ACE NZ) in consultation with the Building Officials Institute of New Zealand (BOINZ). The original suite of producer statements has been revised at the date of this form to ensure standard use within the industry.

The producer statement system is intended to provide Building Consent Authorities (BCAs) with part of the reasonable grounds necessary for the issue of a Building Consent or a Code Compliance Certificate, without necessarily having to duplicate review of design or construction monitoring undertaken by others.

PS1 DESIGN: Intended for use by a suitably qualified independent engineering design professional in circumstances where the BCA accepts a producer statement for establishing reasonable grounds to issue a Building Consent;
PS2 DESIGN REVIEW: Intended for use by a suitably qualified independent engineering design review professional where the BCA accepts an independent design professional's review as the basis for establishing reasonable grounds to issue a Building Consent;
PS3 CONSTRUCTION: Forms commonly used as a certificate of completion of building work are Schedule 6 of NZS 3910:2013 or Schedules E1/E2 of NZIA's SCC 20112
PS4 CONSTRUCTION REVIEW: Intended for use by a suitably qualified independent engineering construction monitoring professional who either undertakes or supervises construction monitoring of the building works where the BCA requests a producer statement prior to issuing a Code Compliance Certificate.
This must be accompanied by a statement of completion of building work (Schedule 6).
The following guidelines are provided by ACE New Zealand and Engineering New Zealand to interpret the Producer Statement.

Competence of Engineering Professional
This statement is made by an engineering firm that has undertaken a contract of services for the services named, and is signed by a person authorised by that firm to verify the processes within the firm and competence of its personnel.
The person signing the Producer Statement on behalf of the engineering firm will have a professional qualification and proven current competence through registration on a national competence-based register such as a Chartered Professional Engineer (CPEng).
Membership of a professional body, such as Engineering New Zealand provides additional assurance of the designer's standing within the profession. If the engineering firm is a member of ACE New Zealand, this provides additional assurance about the standing of the firm.
Persons or firms meeting these criteria satisfy the term "suitably qualified independent engineering professional".
Professional Indemnity Insurance
As part of membership requirements, ACE New Zealand requires all member firms to hold Professional Indemnity Insurance to a minimum level.
The PI Insurance minimum stated on the front of this form reflects standard practice for the relationship between the BCA and the engineering firm.
Professional Services during Construction Phase
There are several levels of service that an engineering firm may provide during the construction phase of a project (CM1-CM5 for engineers3).
The BCA is encouraged to require that the service to be provided by the engineering firm is appropriate for the project concerned.
Requirement to provide Producer Statement PS4
BCAs should ensure that the applicant is aware of any requirement for producer statements for the construction phase of building work at the time the building consent is issued. No design professional should be expected to provide a producer statement unless such a requirement forms part of the Engineering Design Firm's engagement.
Refer Also:
1 Conditions of Contract for Building & Civil Engineering Construction NZS 3910: 2013
2 NZIA Standard Conditions of Contract SCC 2011
3 Guideline on the Briefing & Engagement for Consulting Engineering Services (ACE New Zealand/Engineering New Zealand 2004)
4 PN01 Guidelines on Producer Statements
www.acenz.org.nz
www.engineeringnz.org

RS Eng Ltd

09 4383273
office@RSEng.co.nz
2 Seaview Road,
Whangarei, 0110

Inspection No. 1

File No. 17644

Date 20 July 2021

Time 11:55 AM

Site Inspection Sheet

Health & Safety

Site Induction Completed N/A

Task to be completed
Stripped site

Significant site risks associated with task
Slips, trips and falls

Controls for risk
Be aware

Inspection Details

Project New Dwelling -

Purpose of Inspection Stripped site

Site Address (Lot 8) Sampsons Way, Dargaville

Additional Contact Email No

Comments
The building area was adequately stripped to the hardpan layer maximum depth approx. 300mm BGL. Shear Vanes were taken across the surface recording greater than 85kPa. One small softer area was encountered approximately 50mm to 100mm in depth overlying the hardpan layer, this was due to the hardpan being uneven and perching in areas, this is to be left to prevent the hardpan layer being broken. Ok to proceed with geogrid and hardfill.

Email of Engineer codie@rseng.co.nz

Name of Engineer Codie Hay

Signature

Upload Photos

RS Eng Ltd

09 4383273
office@RSEng.co.nz
2 Seaview Road,
Whangarei, 0110

File No. 17644

Date 29 July 2021

Time 11:15 AM

BC No. 210208

Site Inspection Sheet

Health & Safety

Site Induction Completed Yes

Task to be completed
Hardfill test

Significant site risks associated with task
No

Controls for risk
N/A

Accidents or near misses
No

Inspection Details

Project New Dwelling - GJ Gardner Homes - Randall

Purpose of Inspection Hardfill test

Site Address Lot 8, Sampsons Way, Dargaville

Name of Contact Georgia

Contact Email Address georgia.witt-green@gjgardner.co.nz

Additional Contact Email No

Comments
Hardfill completed for building platform. Geotexile mat placed before filling. Perimeter drains installed. Clegg testing indicates adequate compaction with values over 21. Scala penetrometer testing in deep areas of hardfill indicates ultimate bearing capacities over 300kPa. Ok to proceed with RibRaft preparation.

Action Required?

No

Next Inspection	RibRaft pre-pour
Email of Engineer	iain@rseng.co.nz
Name of Engineer	Iain Mackay
Signature	

Upload Photos

RS Eng Ltd

09 4383273
office@RSEng.co.nz
2 Seaview Road,
Whangarei, 0110

File No. 17644

Date 6 August 2021

Time 3:00 PM

BC No. BC210208

Site Inspection Sheet

Health & Safety

Site Induction Completed Yes

Task to be completed
RibRaft inspection

Significant site risks associated with task
Slips, trips and falls

Controls for risk
PPE
Be aware

Accidents or near misses
No

Inspection Details

Project New Dwelling - Randell

Purpose of Inspection RibRaft inspection

Site Address Lot 8, Sampsons Way, Dargaville

Name of Contact Aaron Bates

Contact Email Address Aaron@abfoundations.co.nz

Additional Contact Email No

Comments
3 x HD12 bottom, 1x HD12 top in edge beam with brick rebate.

Internal beam steel and laps okay.

SE72 mesh used.

Garage door rebate detail shows two HD12 at top of footing, an extra bar needs to be added to the top.

Double pipe penetration needs trimmer bars added around perimeter.

re-entrant bars at internal corners are touching pods. Bars need to be lifted approx. 10mm.

Photos to be provided once completed.

Action Required?

As above

Next Inspection	TBC
Email of Engineer	liam@rseng.co.nz
Name of Engineer	Liam Fuller
Signature	

Upload Photos

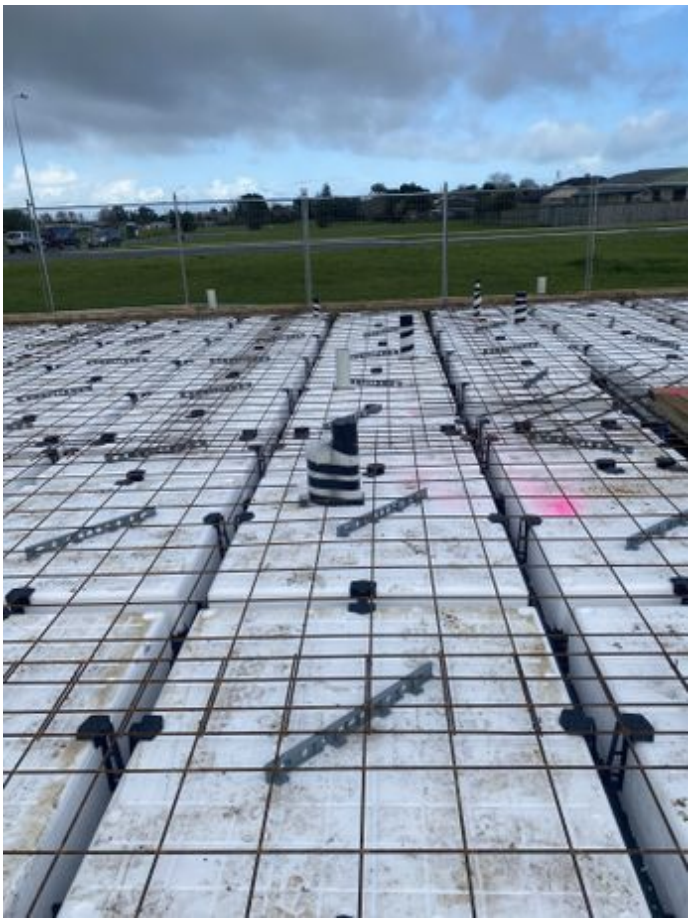

KAIPARA DISTRICT

Kaipara te Oranganui • Two Oceans Two Harbours

KAIPARA DISTRICT COUNCIL

Producer Statement Water Proof Construction (PS3B)

Water Proof Construction

ISSUED BUILDING CONSENT NUMBER **BC210208**

THIS PS3b IS ISSUED BY: Elegant Spaces

TO: **KAIPARA DISTRICT COUNCIL**

IN RESPECT OF: **R Edge and R Randell**

AT (Address): **Lot 8, 8 Sampsons Way, Dargaville**

LEGAL DESCRIPTION - LOT……DP ……..SO ……..

FROM: Luke Roberts (Water Proof membrane Applicator),

LICENSED BY SIKA NZ Reg./License No: 1279

engaged by **GJ Whangarei** (Owner/Builder)

In respect of clause(s) E2 and E3 and B2 of the Building Regulations 1992 for the building work described by the drawings and specifications prepared by the design firm titled;

Internal Waterproofing

numbered……..

I have sighted the issued building consent and sighted the waterproofing details and have inspected the substrate to which the membrane is to be applied and found it to be satisfactory. As a licensed water proof membrane applicator I can confirm that the application of the membrane has been carried out in accordance with the requirements of the New Zealand Building Code, the manufacturer's specifications and requirements.

I understand that if this producer statement is accepted, that it may be used to verify that the building work All / Part only as specified in the attached particulars, the subject of this building consent meets, the requirements of this building consent and the requirements of the Building Code in respect to clauses E2 and E3 and B2 of the Building Regulations 1992.

☑ I understand and accept that Council may rely on this document, for the purposes of establishing compliance with the above building consent and that the content including the signature, whether electronic or not, is truly representative and authoritative of the information contained.

Name: Luke Roberts ……..Signature: 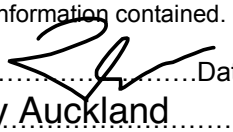 ……Date: **09/03/22**

Address: 13/8 Henry Rose Place, Albany Auckland

Contractor/Applicator: Elegant Spaces

Phone: 0276524887 (bus.) ……..(home) Fax ……

Please find attached the 15 year product and the 5 year workmanship warranties to the property owners.

File: 3117.03

RS Eng Ltd

09 4383273
office@RSEng.co.nz
2 Seaview Road,
Whangarei, 0110

File No. 17644

Date 29 July 2021

Time 11:15 AM

BC No. 210208

Site Inspection Sheet

Health & Safety

Site Induction Completed Yes

Task to be completed
Hardfill test

Significant site risks associated with task
No

Controls for risk
N/A

Accidents or near misses
No

Inspection Details

Project New Dwelling - GJ Gardner Homes - Randall

Purpose of Inspection Hardfill test

Site Address Lot 8, Sampsons Way, Dargaville

Name of Contact Georgia

Contact Email Address georgia.witt-green@gjgardner.co.nz

Additional Contact Email No

Comments
Hardfill completed for building platform. Geotexile mat placed before filling. Perimeter drains installed. Clegg testing indicates adequate compaction with values over 21. Scala penetrometer testing in deep areas of hardfill indicates ultimate bearing capacities over 300kPa. Ok to proceed with RibRaft preparation.

Action Required?

No

Next Inspection	RibRaft pre-pour
Email of Engineer	iain@rseng.co.nz
Name of Engineer	Iain Mackay
Signature	

Upload Photos

KAIPARA DISTRICT

Kaipara te Oranganui • Two Oceans Two Harbours

KAIPARA DISTRICT COUNCIL

Producer Statement Construction (PS3) - Plumbing

Issued by: Marty Crowe being a Registered Certifying Plumber.

In respect of the testing of water pipework prior to concealment for:

(Owner) Rachyl Edge & Raegan Randell

At (Address) 8 Sampsons Way

Dargaville

Legal Description: Lot 8 DP 542244 Valuation _____

I have sighted the issued Building Consent (BC 210298) and have constructed the plumbing pipes and fitting in accordance with the approved Building Consent, the New Zealand Building Code, and the manufacturers specifications and requirements.

I have tested the water supply system as follows:

(✓) By pressurising the water supply system by subjecting the hot and cold system to a pressure of 1500kPa for a period of not less that 15 minutes and inspecting the system to ensure that there are no leaks, in accordance with NZBC G12/AS1 Clause 7.5.1

( ) By pressurising the UPVC water piping systems to 1.5 times the working pressure for a period not less than 15 minutes and checking that there are no leaks, as given in section 9 of NZS 7643, in accordance with NZBC G12/AS1 clause 7.5.2

I believe on reasonable grounds that the pipework has passed that test.

I also understand that Kaipara District Council in accepting this Producer Statement Construction (PS3), will be relying on it to establish compliance at the completion of the building work.

Signature of Certifying Plumber: Matt Crowe

Registration Number: 18023 Reg Expiry Date: 31/3/22

Date: 15/12/21

Form 5
Building consent - BC210208

Section 51, Building Act 2004

The building

Street address of building:	8 Sampsons Way Dargaville
Legal description of land where building is located:	Lot 8 DP 542244
Building name:	
Location of building within site/block number:	8 Sampsons Way Dargaville
Level/unit number:	0

The owner

Name of owner:	Rachyl Edge and Regan Randell
Contact person:	Rachyl Edge
Mailing address:	104 Te Kowhai Drive Maungatapere 0179
Street address/registered office:	
Phone number:	Landline: 094375666 Mobile:
Daytime:	No information provided
After hours:	No information provided
Facsimile number:	No information provided
Email address:	rachyledge@gmail.com
Website:	No information provided

First point of contact for communications with the building consent authority:
Genna Jones (GJ Gardner); Mailing Address: PO Box 8046
Kensington
Whangarei 0145; Phone: 094375666

Building work

The following building work is authorised by this building consent:
Construct 3 Bedroom Dwelling with Attached Garage

This building consent is issued under section 51 of the Building Act 2004. This building consent does not relieve the owner of the building (or proposed building) of any duty or responsibility under any other Act relating to or affecting the building (or proposed building). This building consent also does not permit the construction, alteration, demolition, or removal of the building (or proposed building) if that construction,

alteration, demolition, or removal would be in breach of any other Act.

Conditions

This building consent is subject to the following conditions:

Section 90 - Inspections by Building Consent Authorities: (1) Every building consent is subject to the condition that agents authorised by the building consent authority for the purposes of this section are entitled, at all times during normal working hours or while building work is being done, to inspect-
(a) land on which building work is being or is proposed to be carried out; and
(b) building work that has been or is being carried out on or off the building site; and
(c) any building.

(2) The provisions (if any) that are endorsed on a building consent in relation to inspection during the carrying out of building work must be taken to include the provisions of this section.

(3) In this section, inspection means the taking of all reasonable steps to ensure that building work is being carried out in accordance with a building consent.

Electrical Energy Works Certificate as per section 92 (4)

Ground bearing to be confirmed by a Geotechnical engineer
A CPEng engineer to confirm slab construction and perimeter subsoil drainage in accordance with SED and consent documenation.

NOTE: The required PS4 and Specialist documentation are in support of the required Council Inspections Specified on the Form 5.
These do not negate the requirements for the Council Inspections but are additional to them.

Construction monitoring requirements
Please contact the following consultants directly to arrange the construction monitoring identified which they have been engaged to carry out.

- RS Eng Ltd: Foundations, Ribraft slab, including installation of perimeter subsoil drain- PS4.
- Chartered Geotechnical engineer: Building platform observation and Producer Statement Construction review - PS4

Copies of all site reports/records must be provided to the Building Consent Authority as work proceeds for

their records, please forward these to buildingsupport@kaipara.govt.nz referencing the building consent number.

Inspections

The following inspections are required:

- Siting and Site Scrape Inspection
- Wastepipes
- Framing / Pre-wrap
- Deck / Roof membrane
- Preline
- Drainage
- Prepour
- Floor Slab
- Post Wrap / Cavity
- Half High Brick
- Post Line
- Final

Documents required

Prepour

- B1: Foundations - Construction Monitoring Records PS4 - CPEng To Inspect Foundations Prior To Concrete Pour.

Floor Slab

- B1: Slab And Perimeter Subsoil Drainage - Construction Monitoring Records PS4

Drainage

- E1: Stormwater Drain As-built Plans
- G13: As-builts Drainlayer Details.

Final

- B1: Truss certification
- G9: Energy works certificate

Compliance schedule

A compliance schedule is not required for the building.

Attachments

Copies of the following documents are attached to this building consent:

- Advice notes
- Project Information Memorandum (PIM): BC210208
- Form 4: Certificate attached to PIM - **Issues resolved on 15 Jun 2021**

Signature: Sharon Campbell
Position: Contractor
On behalf of: Kaipara District Council
Issue Date: 02 July 2021

Advice notes

Section 92 (2A) - Code Compliance Certificate Application - Restricted Building Work: An application for Code Compliance Certificate is required to be applied for within 24 months of the Building Consent issued date, please complete this within the AlphaOne system.
As the building work involves restricted building work, all licensed building practitioners who carry out or supervise restricted building work under this consent must on completion of the work provide the Owner and the Territorial Authority (Kaipara District Council) with a record of work, in the prescribed form (Form 6A), detailing what restricted building work has been carried out or supervised.
In accordance with S92 of the Building Act records of work must be included with the application for Code Compliance Certificate.

The records of building work may be submitted via the customer portal as follows:
Sign in;
Search for the appropriate project in My Applications;
Go to the Action menu by the application progress bar and select Upload Documents;
On the Miscellaneous document select attach file and upload your document.

Site Safety: Please ensure all appropriate site safety measures are provided throughout the contract works to comply with NZ Building Code Clause F5 and all occupational safety and health requirements.

Electrical Energy Works Certificate: The Building Consent Authority places full reliance of the issue of energy work certificates to verify that the installation and completion of electrical services comply with the provisions of New Zealand Building Code Clauses G9. Code compliance certificate will not be issued unless the energy works certificates identifies compliance with this specific code clause and confirms compliance with this building consent.

As-Built Truss Layout - An 'as built' truss layout, showing truss and top plate connectors, along with design verification data and lintel sizes outside the scope of NZS 3604 must be available on site at the Prewrap Inspection for the Building Consent Authority officer to collect to facilitate the inspection and retain for record purposes.
Waterproofing System Verification - As most internal water proofing systems rely on installation of multiple coats the Building Consent Authority will not undertake inspection of these. Verification will be required from the installer of the internal tanking systems to certify that the system has been installed in accordance with the building consent and manufacturer specifications.
KDC AN40.1.1 - **Smoke alarms:** Compliant and operating smoke alarms with hush facility shall be installed within 3 metres of every bedroom and on every level of the dwelling and will be checked at the time of final inspection.
KDC AN45 - **Building Platform -** A PS4 - Construction review by a Chartered Professional Geotechnical engineer is required for building platform observation.
Construction Review - A PS4 - Construction review by a CPEng is required for review fo foundations,

perimeter subsoil drainage and SED Ribraft slab.

ADDENDA TO THIS BUILDING CONSENT:

1. This building consent will lapse and be of no effect if the building work to which it relates does not commence within 12 months after the date of issue. The consent may be extended for any further period at the discretion of council.

2. No deviation or alteration from the original plans and specifications can be carried out without written approval of Council and no building may be converted to any other use other than that stated on the building consent.

3. IMPORTANT: YOU ARE FULLY RESPONSIBLE FOR ANY DAMAGE DONE TO ANY WORKS SUCH AS TELEPHONE CABLES, POWER CABLES, WATER MAINS, GAS MAINS, SEWERS, PIPES, FOOTPATHS, ROADS OR OTHER SERVICES.

4. As the property owner is responsible for the correct siting of all works in accordance with the NZ Building Code and the Resource Management Act, the owner must ascertain the true position of the survey pegs before work commences.

5. NOTICE THAT BUILDING WORK IS READY FOR INSPECTION. For the purposes of Section 222 of the Building Act 2004, and unless otherwise provided by the building consent, the owner or other person undertaking any building work shall give at least 2 working days notice of the covering up of any
   i) drainage or plumbing
   ii) excavation for a foundation
   iii) reinforcing steel for a foundation
   iv) timber required to have a specific moisture content
   v) other work required to give notice as a condition

6. Council MUST be notified at the completion of building work on the attached form.

BUILDING CONSENT FEES:

Please note that further fees may be required to be paid before a Code Compliance Certificate is issued for this Building Consent. All fees must be paid before a Code Compliance Certificate will be issued.

Project information memorandum

Section 34, Building Act 2004

Application

Owner:	Rachyl Edge and Regan Randell C/- GJ Gardner PO Box 8046 Kensington Whangarei 0145
Issue Date:	05 May 2021

Project

Description:	Construct 3 Bedroom Dwelling with Attached Garage
Intended use:	2.0 Housing: 2.0.2 Detached Dwelling
Location:	8 Sampsons Way Dargaville
Legal description:	Lot 8 DP 542244
Valuation number:	0095000208

Please Note: This is not an approval to start building work. Please ensure your Building Consent is issued prior to commencing any work. Upon receiving your building consent please check carefully and ensure that compliance with any Conditions, District Planning restrictions or Resource Consent conditions are satisfied. The information below should be read with the understanding that should changes be made at building consent stage then this may alter the requirements listed below.

This project information memorandum does NOT constitute a building consent.

Heritage status of the building

Building work associated with this project will not be affecting land or structures that have heritage status. This project is exempt from the rules of the district plan that relate to heritage buildings.

Notable trees

Council is not aware of there being any notable trees associated with this site. Therefore the project is exempt from the rules of the District Plan that relate to Notable Trees.

Special features of the land concerned

There are no known special features of the land concerned - this includes potential natural hazards, or the likely presence of hazardous contaminants that is likely to be relevant to the design and construction or alteration of the building or proposed buildings; and that is known to the Territorial Authority; and that is not apparent from the district plan under the Resource Management Act 1991.

"Land concerned" means the land on which the proposed building work is to be carried out; and includes any

other land likely to affect or be affected by the building work.

"Special feature of the land concerned" includes, without limitation, potential natural hazards, or the likely presence of hazardous contaminants, that -
a) are likely to be relevant to the design and construction or alteration of the building or proposed building; and
b) is known to the Territorial Authority; and
c) is not apparent from the District Plan under the Resource Management Act 1991.

Details of existing stormwater or wastewater systems relating to proposed building work
There are existing storm water services available on, or adjacent to, the site of the proposed building work.

There are existing wastewater utility services available on, or adjacent to, the site of the proposed building work.

Other information
Once a Building Consent is issued, the Council will follow up on building work not completed within two years of building consent issue.

A Building Consent lapses and is of no effect if the building work has not been started within 12 months of the date of issue.

If the building is public premises it may not be occupied until either a Code Compliance Certificate or Certificate for Public Use has been issued.

If the building is wholly or partly a dam, a Project Information Memorandum and Building Consent must be obtained from the regional authority.

The Northland Regional Council has a register of contaminated sites. Please contact them on 0800 002 004 if you suspect that your property may be contaminated e.g. historic timber treatment sites, service stations, landfill sites.

Please check your Certificate of Title for any encumbrances (such as easements, section 73 notice) before you make an application for a Building Consent.

All archaeological sites are protected under the provisions of the Historic Places Act 1993. If subsurface archaeological evidence (shell, midden, hangi, storage pits, etc) should be unearthed during construction, work should cease in the immediate vicinity of the remains and the Historic Places Trust should be contacted.

The proposed project does not comply with the District Plan zoning as it does not meet the Residential Zone Rules. Please see the attached Form 4.

Consent Notice:11765180.3
Please be advised there are consent notices registered against this property. A breach of these conditions may result in legal action.

Council's desktop assessment has found that the site wind zone rating is high

The Council has found that the site exposure zone is zone C - Inland

Development Contributions do not apply to this project.

The proposed vehicle access (gradient / width / length) needs to comply with the requirements of the District Plan / Council's Engineering Standards. Attached if required, for your use, is a copy of the crossing application form.

ATTACHMENTS:
-Form 4
-Consent Notices
-Vehicle Crossing application form
-GIS map of property and utilities

Notes:
1. The information supplied in the sections of this project information memorandum is specific to the building project to which the application relates by reference to Council files and records. No property inspection, or title search, has been undertaken. To enable the Council to measure the accuracy of this document based on our current records we would appreciate your response should you find any information contained herein which may be considered to be incorrect or omitted. Please telephone the Council (09) 439 3123.

2. The Council has used its best endeavors to ensure that all information provided in this project information memorandum is correct and complete in all material respects. In the event that a material error or omission can be proven the Council's liability, whether in contract or in tort shall be limited to the fee paid to Council to obtain this report.

3. This information reflects the Kaipara District Council's current understanding of information which is relevant to the project. This is based only on the information thus far provided to it and held on record. As a result the Council is not in a position to warrant that the information is complete or without error and accepts no liability for any inaccuracy in, or omission from, this information.

4. The information contained in this project information memorandum is current at the date the memorandum is issued. Further relevant information may come into the Council's possession subsequent to the date of issue.

Form 4
Certificate attached to Project Information Memorandum

Section 37, Building Act 2004

RE: BC210208, Rachyl Edge and Regan Randell, 8 Sampsons Way
Dargaville

Restrictions on commencing building work under the Resource Management Act 1991

The building work referred to in the attached project information memorandum or building consent is also required to have the following resource consents under the Resource Management Act 1991:

13.10.01a - Excavation and Fill:
Please demonstrate compliance with this rule by providing compliant earthwork volumes

13.10.25 - Vehicle Access and Driveways:
1. Control of reversing provisions will not comply and will therefore be classed as a Restricted Discretionary Activity so resource consent will be required to be obtained before this activity can occur.

13.10.27 - Parking:
1. Control of reversing provisions will not comply and will therefore be classed as a Restricted Discretionary Activity so resource consent will be required to be obtained before this activity can occur.

Resource consents will or may materially affect the building work to which the attached project information memorandum relates. Until resource consent has been granted, building work may not proceed.

Failure to comply with the requirements of this notice may result in legal action being taken against you under the Resource Management Act 1991.

Matthew Bayly
Planning Team
On behalf of: Kaipara District Council
Issue Date: 23 April 2021

210208-Assets

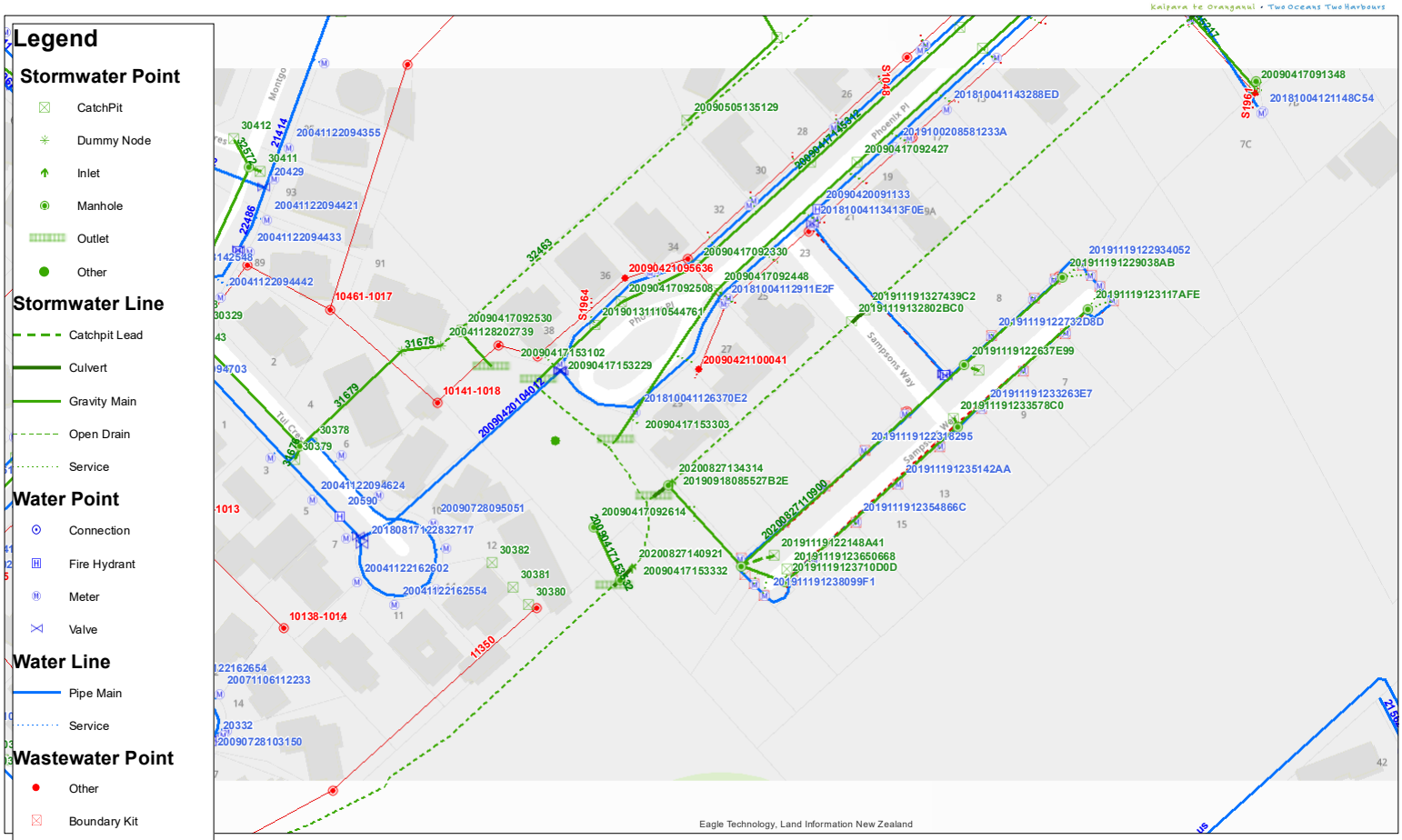

Scale: 1:1,128

Original Sheet Size: A3

Projection: NZGD 2000 New Zealand Transverse Mercator

Bounds: 1,677,889.8839 6,023,670.8454
1,678,347.6013 6,023,402.3557

The information provided is an indication only and needs to be validated in the field.
Kaipara District Council accepts no responsibility for errors or omissions for loss or damage resulting from the reliance or use of this information. Cadastral information is derived from LINZ's Digital Cadastral Record System (CRS) CROWN COPYRIGHT RESERVED.

RECORD OF TITLE
UNDER LAND TRANSFER ACT 2017
FREEHOLD

Search Copy

R.W. Muir
Registrar-General
of Land

Identifier **912640**
Land Registration District **North Auckland**
Date Issued 05 June 2020

Prior References
NA62D/391

Estate Fee Simple
Area 619 square metres more or less
Legal Description Lot 8 Deposited Plan 542244
Registered Owners
Regan John Randell and Rachyl Irene Edge

Interests

11765180.3 Consent Notice pursuant to Section 221 Resource Management Act 1991 - 5.6.2020 at 12:20 pm

Land Covenant in Covenant Instrument 11765180.4 - 5.6.2020 at 12:20 pm

Appurtenant hereto is a right of way, a right to convey electricity, telecommunications and water and a right to drain water and sewage created by Easement Instrument 11765180.7 - 5.6.2020 at 12:20 pm

The easements created by Easement Instrument 11765180.7 are subject to Section 243 (a) Resource Management Act 1991

11959861.2 Mortgage to ASB Bank Limited - 21.12.2020 at 1:26 pm

Identifier **912640**

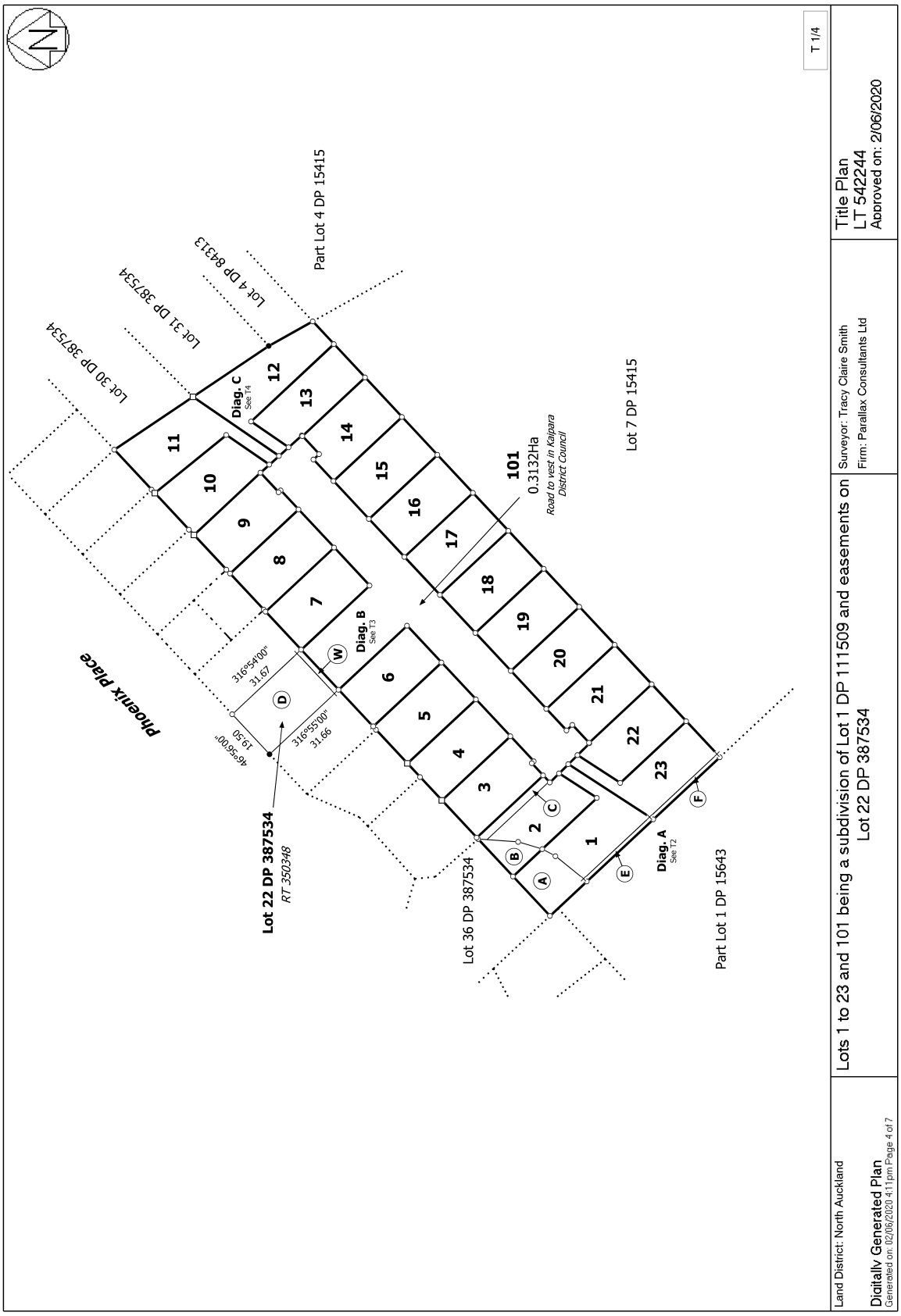

Identifier **912640**

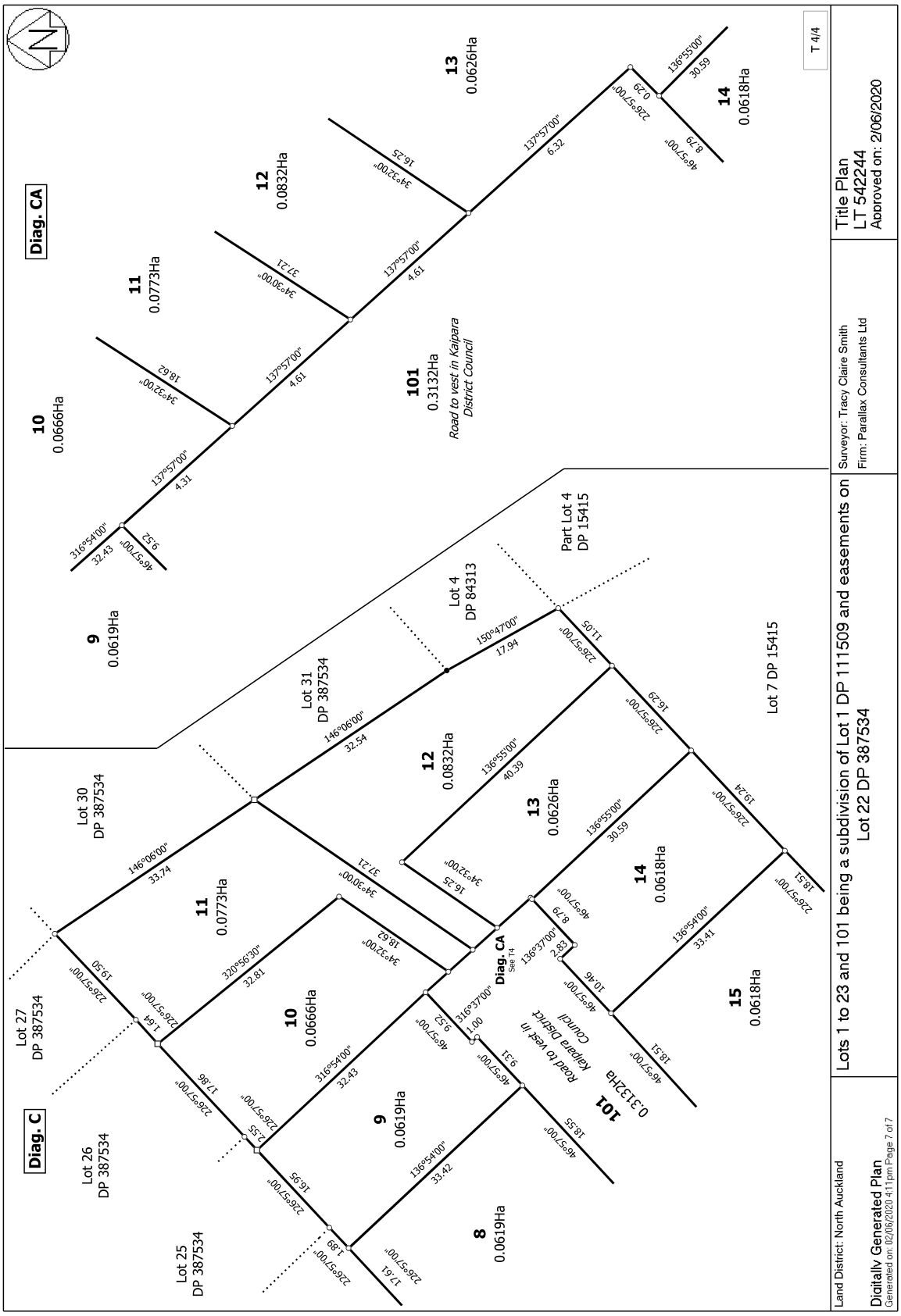

View Instrument Details

Landonline

Toitu te Land whenua Information New Zealand

Instrument No.	11765180.3
Status	Registered
Date & Time Lodged	05 Jun 2020 12:20
Lodged By	Dempster, Vicki Marie
Instrument Type	Consent Notice under s221(4)(a) Resource Management Act 1991

Affected Records of Title	Land District
912633	North Auckland
912634	North Auckland
912635	North Auckland
912636	North Auckland
912637	North Auckland
912638	North Auckland
912639	North Auckland
912640	North Auckland
912641	North Auckland
912642	North Auckland
912643	North Auckland
912644	North Auckland
912645	North Auckland
912646	North Auckland
912647	North Auckland
912648	North Auckland
912649	North Auckland
912650	North Auckland
912651	North Auckland
912652	North Auckland
912653	North Auckland
912654	North Auckland
912655	North Auckland

Annexure Schedule Contains 3 Pages.

Signature

Signed by Vicki Marie Dempster as Territorial Authority Representative on 04/06/2020 09:57 AM

***** End of Report *****

© Copyright: Land Information New Zealand

IN THE MATTER of the Resource Management Act 1991 ("**Act**")

AND

IN THE MATTER of the subdivision of land shown in Deposited Plan 542244 (North Auckland Registry) ("**Plan**")

CONSENT NOTICE
(Section 221 of the Act)

KAIPARA DISTRICT COUNCIL ("**Council**") being the territorial authority of the district within which the land described in the First Schedule below ("**Land**") is located has consented to the subdivision of the Land as shown in the Plan subject to the conditions of the Second Schedule below to be complied with on a continuing basis by the Owner (as defined in the Act).

FIRST SCHEDULE
(Land)

ALL the land being Lot 22 Deposited Plan 387534 comprised in Identifier 350348 and Lot 1 Deposited Plan 111609 comprised in Identifier NA62D/391.

SECOND SCHEDULE
(Conditions)

The Owner (as defined in the Act) must, on a continuing basis, to the satisfaction of the Council, comply with the following conditions of the Council's Subdivision Consent RM180003A, namely:

1. In respect of all lots 1 to 23 (inclusive) on the Plan:

1.1 Earthworks, the location of buildings, building foundations and storm water to be subject to specific engineering design by a suitably qualified Chartered Professional Engineer having regard to any soil instability/saturation issues that may exist or arise as a result of the development. Design should take into account any of the recommendations identified in the Geotechnical Investigation and Engineering Report (Reference 11546), dated 27 August 2018, prepared by Hawthorn Geddes.

1.2 Each lot will require specific foundation design at Building Consent stage to ensure that future dwellings are designed and constructed with due accordance paid to the highly sensitive nature of the sub soils present on the site.

1.3 No vehicle crossing(s) is provided to the lots. All lots must form a complying vehicle crossing consistent with the Kaipara District Council Engineering Standard 2011 at the time of the construction of a dwelling. Prior to commencement of any construction work, in relation to vehicle crossings, the owner(s) shall have a vehicle crossing permit for each lot and shall enter into a Bond in a form to the approval of Council guaranteeing that in the event of damage to existing Council assets or abandonment of the work by the consent holder, that all existing Council assets will be returned to a condition at least equal to that which existed prior to the commencement of work. The bond shall be for the sum of $5,000 and shall remain in full force and effect until such time as all work has been completed and any necessary remedial work completed to the satisfaction of Council

2. In respect of Lots 1 and 12 to 23 (inclusive) on the Plan (each a "Lot"):

2.1 The owner(s) shall not and nor shall any occupier of or visitor to the Lot make, and surrenders the right to make, a complaint to the relevant consent authority or the Environment Court, as to any reverse sensitivity effects, including any emission of noise, vibration or any effect associated with any activity which is expressly allowed by a rule in a regional or District Plan, a resource consent, a designation, or regulations made under the Resource Management Act 1991 ('RMA') and shall not seek that a declaration or enforcement order be made by the Environment Court under sections 311 or 316 of the RMA, nor seek that an abatement or infringement notice be served by a duly authorised enforcement officer under sections 322 or 343C of the RMA, or that criminal proceedings be commenced in the District Court by the relevant consent authority under section 338 of the RMA in respect of any lawful activity carried out by the Dargaville High School; (Lot 7 DP 15415; Lot 1 DP 28811; Lot 4 DP 36061; PT Lot 13 DP 14511; PT Lot 8 DP 15415; PT Lot 1 DP 1 5643).

2.2 The owner of a Lot shall not be a party to, finance or contribute to the costs of any complaint, application for other proceedings or process specified in condition 2.1 above.

2.3 Any future dwelling shall have double glazing on all habitable room windows located on the south eastern and south western sides of the dwelling (the sides of the dwelling facing the

Dargaville High School property, being Lot 7 DP 15415; Lot 1 DP 28611; Lot 4 DP 36061; PT Lot 13 DP 14511; PT Lot 8 DP 15415; PT Lot 1 DP 1 5643).

2.4 Screening shall be undertaken that consists of a 1.8m high solid fence or a minimum 1.8m high planting, of no less than 1 metre depth along the west and south eastern boundary bordering the Dargaville High School property (being Lot 7 DP 15415; Lot 1 DP 28611; Lot 4 DP 36061; PT Lot 13 DP 14511; PT Lot 8 DP 15415; PT Lot 1 DP 1 5643).

DATED the 5th day of May 2020

SIGNED by the Council
by its authorised signatory

Dina Tetzner

View Instrument Details

Toitu te Land whenua Information New Zealand

Instrument No.	11765180.4
Status	Registered
Date & Time Lodged	05 Jun 2020 12:20
Lodged By	Dempster, Vicki Marie
Instrument Type	Land Covenant under s116(1)(a) or (b) Land Transfer Act 2017

Affected Records of Title	Land District
912633	North Auckland
912634	North Auckland
912635	North Auckland
912636	North Auckland
912637	North Auckland
912638	North Auckland
912639	North Auckland
912640	North Auckland
912641	North Auckland
912642	North Auckland
912643	North Auckland
912644	North Auckland
912645	North Auckland
912646	North Auckland
912647	North Auckland
912648	North Auckland
912649	North Auckland
912650	North Auckland
912651	North Auckland
912652	North Auckland
912653	North Auckland
912654	North Auckland
912655	North Auckland

Annexure Schedule Contains 6 Pages.

Covenantor Certifications

I certify that I have the authority to act for the Covenantor and that the party has the legal capacity to authorise me to lodge this instrument ☑

I certify that I have taken reasonable steps to confirm the identity of the person who gave me authority to lodge this instrument ☑

I certify that any statutory provisions specified by the Registrar for this class of instrument have been complied with or do not apply ☑

I certify that I hold evidence showing the truth of the certifications I have given and will retain that evidence for the prescribed period ☑

Signature

Signed by Vicki Marie Dempster as Covenantor Representative on 04/06/2020 09:42 AM

Covenantee Certifications

I certify that I have the authority to act for the Covenantee and that the party has the legal capacity to authorise me to lodge this instrument ☑

© Copyright: Land Information New Zealand

I certify that I have taken reasonable steps to confirm the identity of the person who gave me authority to lodge this instrument ☑

I certify that any statutory provisions specified by the Registrar for this class of instrument have been complied with or do not apply ☑

I certify that I hold evidence showing the truth of the certifications I have given and will retain that evidence for the prescribed period ☑

Signature

Signed by Vicki Marie Dempster as Covenantee Representative on 04/06/2020 09:42 AM

***** End of Report *****

KAIPARA DISTRICT

Kaipara te Oranganui • Two Oceans Two Harbours

Vehicle Crossing Permit Application

KAIPARA DISTRICT COUNCIL

Application No .....

Resource Consent No .....
(only required if current RC exists of which a VC permit is a part of)

Applicants Details

Owner's Name .....

Postal Address .....

Contact Telephone No .....Email .....

Agent Name .....

Postal Address .....

Contact Telephone No .....Email .....

Send permit to: ☐ Owner ☐ Agent

Site Location

Street/Rapid No ..... Road Name .....

Town or Locality .....

Legal Description ..... Valuation No .....

Contractor/Traffic Management Plan Details

Please Note: ***Application will not be accepted by Council if a Plan is not attached for the location of your vehicle access. If constructing a vehicle crossing, your application will be rejected if a Traffic Management Plan is not attached.***

Name of person/firm constructing the crossing .....

Person in Charge of Traffic Management .....

Postal Address .....

Contact Telephone No .....Email .....

Crossing Information Required

Location:

Adjacent Road is: .....

☐ Urban (S05) ☐ Rural (S06)

☐ Sealed with kerb and channel ☐ Sealed with no kerb and channel ☐ Metalled

Intended Use

☐ Residential ☐ Commercial ☐ Other *(please specify)*.....

KAIPARA DISTRICT
Kaipara te Oranganui • Two Oceans Two Harbours

Vehicle Crossing Permit Application

KAIPARA DISTRICT COUNCIL

SITE LOCALITY PLAN

Map Showing Location of Vehicle Crossing	**Please show the following:** • Roads • Property boundaries • Location of entranceway – including **distances** from boundaries and adjacent numbered property entrances • Other identifiable land marks, buildings etc.
Property Description:	
Road Name:	

The Application Fee must be paid before permit the can be processed.
If the applicant has a current resource consent of which the Vehicle Crossing is a part of the fee to be charged is $345.00, an additional inspection fee will be charged as part of the consent application. For all other applications the fee is $485.00 which includes the pre and post approval inspections.

NB: A further $150.00 will be charged if an additional inspection is required.

Signed by Owner/Agent: …… Date: ..... ……

Office Use Only

Receipt No: ..... Date: .....

RCA consent (eg CAR/WAP) and/or RCA contract reference	

TRAFFIC MANAGEMENT PLAN (TMP) – SHORT FORM

*Complete **short form** if simple activity and RCA permits. Refer to the NZ Transport Agency's Traffic control devices manual, part 8 Code of practice for temporary traffic management (CoPTTM), section E, appendix A for a guide on how to complete each field.*

Organisations/ TMP reference	TMP reference:	Contractor:	Principal ***(Client)*:**			
			RCA:			
Location details and road characteristics	Road names and suburb		House no. / RPs ***(From and to)***	Road level	Permanent speed	AADT/Peak flows
Description of work activity						

Planned work programme

Start date		Time		End date		Time	
Consider significant stages, **for example:** • **road closures** • **detours** • **no activity periods.**							
Alternative dates if activity delayed							

Road aspects affected ***(delete either Yes or No to show which aspects are affected)***

Pedestrians affected?	**Yes No**	Property access affected?	**Yes No**	Traffic lanes affected?	**Yes No**
Cyclists affected?	**Yes No**	Restricted parking affected?	**Yes No**	Delays or queuing likely?	**Yes No**

TSL/ Diagram ***(see TSL decision matrix for guidance)***	TSL details as required **Approval of Temporary Speed Limits (TSL) are in terms of Section 5 of Land Transport Rule: Setting of Speed Limits 2003,Rule 54001** ***(List speed, length and location)***	Times ***(From and to)***	Dates ***(Start and finish)***	Diagram ref. no's ***(Layout drawings or TMDs)***
Attended day/ night	**A temporary maximum speed limit of km/h is hereby fixed for motor vehicles travelling over the length of m situated between (House no./RP) and (House no./RP) on (street or road name)**			
Unattended day/ night	**A temporary maximum speed limit of km/h is hereby fixed for motor vehicles travelling over the length of m situated between (House no./RP) and (House no./RP) on (street or road name)**			

RCA consent (eg CAR/WAP) and/or RCA contract reference	

Contingency plan		
If long queues form or delays exceed 5mins *(or any other period required by RCA)*, site to be disestablished or additional lanes made available.	**Adjust TMD to suit unforeseen circumstances *(eg weather or site overlaps with another work site)*.**	**Emergency services will be accommodated and access provided through the site as required.**
Add additional contingencies:		

Contact details

	Name	24/7 contact number	CoPTTM ID	Qualification	Expiry date
Principal					
TMC					
Engineers' representative					
Contractor					
STMS					
TC					
Others as required					

TMP preparation (or approval if STMS delegated authority to approve TMPs)

Delete the option that does not apply (either prepared or approved)

Prepared / Approved						
	Name	**Date**	***Signature***	***ID no.***	***Qualification***	***Expiry date***

This TMP meets CoPTTM requirements	Number of diagrams attached				

TMP returned for correction						
	Name	**Date**	***Signature***	***ID no.***	***Qualification***	***Expiry date***

Engineer/TMC to complete following section when approval or acceptance required

Approved by TMC or engineer ***(delete one)***						
	Name	**Date**	***Signature***	***ID no.***	***Qualification***	***Expiry date***
Acceptance by TMC ***(if required)***						
	Name	**Date**	***Signature***	***ID no.***	***Qualification***	***Expiry date***

Qualifier for engineer or TMC approval

RCA consent (eg CAR/WAP) and/or RCA contract reference	

Approval of this TMP authorises the use of any regulatory signs included in the TMP or attached traffic management diagrams.

This TMP is approved on the following basis:

1. To the best of the approving engineer's/TMC's judgment this TMP conforms to the requirements of CoPTTM.

2. This plan is approved on the basis that the activity, the location and the road environment have been correctly represented by the applicant. Any inaccuracy in the portrayal of this information is the responsibility of the applicant.

3. The STMS for the activity is reminded that it is the STMS's duty to postpone, cancel or modify operations due to the adverse traffic, weather or other conditions that affect the safety of this site.

Memorandum from Licensed Building Practitioner: Record of building work

Section 88, Building Act 2004

THE BUILDING

Street address:	LOT 8 8 SAMPSON WAY
Suburb:	
Town/City: WARKAVILLE	Postcode:

THE PROJECT

Building consent number: 210208

THE OWNER(S)

Name(s):	RACHEL EDGE
Mailing address:	LOT 8 8 SAMPSON WAY
Suburb:	PO Box/Private Bag:
Town/City: WARKAVILLE	Postcode:
Phone number:	Email address:

RECORD OF WORK THAT IS RESTRICTED BUILDING WORK

PRIMARY STRUCTURE

Work that is restricted building work ✓ Tick	Description of restricted building work If necessary, describe the restricted building work	Carried out or supervised Tick ✓ whether you carried out the RBW or supervised someone else.
○ Foundations and subfloor framing	N/A	○ Carried out ○ Supervised
○ Walls	FRAMING.	○ Carried out ✓ Supervised
○ Roof	N/A	○ Carried out ○ Supervised
○ Columns and beams		○ Carried out ○ Supervised
✓ Bracing	GIB BOARD.	○ Carried out ○ Supervised
○ Other	N/A	○ Carried out ○ Supervised

White – Council Copy Yellow – Home Owner's copy Blue – Builder's Copy

RECORD OF WORK THAT IS RESTRICTED BUILDING WORK

EXTERNAL MOISTURE MANAGEMENT SYSTEMS

Damp proofing ◯		◯ Carried out ◯ Supervised
Roof cladding or roof cladding system ◯		◯ Carried out ◯ Supervised
Ventilation system (for example, subfloor or cavity) ◯		◯ Carried out ◯ Supervised
Wall cladding or wall cladding system ◯		◯ Carried out ◯ Supervised
Waterproofing ◯		◯ Carried out ◯ Supervised
Other ◯		◯ Carried out ◯ Supervised

ISSUED BY

Name and contact details of the licensed building practitioner who is licensed to carry out or supervise restricted building work.

Name:	JOHN THOMSON	LBP number:	BP 114264.
Class(es) licensed in:	CARPENTRY		SITE 2
Plumbers, Gasfitters and Drainlayers registration number (if applicable):	—		
Mailing address (if different from below):	—		
Street address/Registered office:	—		
Suburb:	TE MAI.	Town/City:	WHANGAREI.
PO Box/Private Bag:	1023.	Postcode:	0143.
Phone number:	09 4302780	Mobile:	0274780184.
After hours:		Fax:	
Email address:		Website:	

DECLARATION

I JOHN THOMSON carried out or supervised the restricted building work recorded on this form.

Signature: _____ Date: 22/2/2022

White – Council Copy Yellow – Home Owner's copy Blue – Builder's Copy

NZ BRICK & BLOCKLAYERS FEDERATION

Memorandum from licensed building practitioner:
Record of building work
Section 88, Building Act 2004, Form 6A

JOB No. ROW No. 07025

INVOICE No.

The Building

Street address of building: 8 Sampsons Way dargaville

The Project

Building consent number:

The Owner

Name: R Edge	Address:
Telephone:	
Email:	

Record of Work that is Restricted Building Work

Work that is restricted building work		Description	Carried out / supervised
Primary structure			
Foundations and subfloor framing	[ ]		[ ] Carried out [ ] Supervised
Walls	[ ]		[ ] Carried out [ ] Supervised
Columns and beams	[ ]		[ ] Carried out [ ] Supervised
Other	[ ]		[ ] Carried out [ ] Supervised
External moisture management systems			
Damp proofing & penetrations	[ ]		[ ] Carried out [ ] Supervised
Wall cladding or wall system	[✓]	Brick Walls	[✓] Carried out [ ] Supervised
Other	[ ]		[ ] Carried out [ ] Supervised

Issued by

Name: David Winters

LBP number: 124899 Class(es) licensed in: B1 + B2

Mailing address: 47 torown Lane Waipu

Street address or registered office:

Telephone: Landline: Mobile: 021 0443944

Daytime: After hours:

Facsimile: Email:

Declaration

David Winters *(name of practitioner)*

carried out or supervised the restricted building work recorded on this form.

Signature: [signature] Date: 20/12/21

WHITE COPY - TA BLUE COPY - HOMEOWNER GREEN COPY - TRADESMAN

PRODUCT WARRANTY
Sikalastic®-220 W

BUILDING TRUST

This warranty form is only to be used for projects involving up to 50 square metres of installed Sikalastic®-220 W

Warranty Number:	**SW** 8839
Project Name:	
Full Project Address:	Lot 8, 8 Sampsons Way, Dargaville
Client Name: (who the warranty is made out to)	R Edge & R Randell
Product installation completion date:	8th March 2022
Applicator: (Name of company and/or individual)	Luke Roberts - Elegant Spaces Ltd
Sika Applicator/License No.:	1279
Total area of product installed in m²:	2m²
Where was the product installed? e.g. ensuite	Bathroom bath face and splashback
Proof of purchase: e.g. Invoice No.(s)	Invoice No 7213441
Store and area purchased from: e.g. Tile King, Warkworth	Tile Depot Whangarei
Today's Date:	10/03/2022

1 Sika (NZ) Limited ("Sika") hereby warrants that Sikalastic-220 W (the Product) supplied for use on the above project will conform with the technical data detailed on the Sikalastic-220 W Data Sheet (the current version at the time of purchase) for a period of ten (10) years from the date of purchase by the original purchaser. A claim pursuant to this Warranty must be notified to Sika in writing within 10 years from the date the product was first sold to the original purchaser.

2 This warranty is only valid when accompanied by proof of purchase of sufficient quantity of Product for its correct installation, in accordance with the Product data sheet, over the area (in square metres) referenced above.

3 This Warranty is provided on the basis that the Product is stored, transported, used, installed, applied and maintained in strict accordance with the instructions contained in the Data Sheet, and any other written instructions (if any) that may be provided by Sika, and that the Product is used within its stated shelf life. Failure to comply with such instructions will invalidate this Warranty.

4 In the event that it is proved to the complete satisfaction of Sika that the Product does not conform with the technical data detailed on the Data Sheet, Sika will, on request made in writing to the Head Office of Sika, at the sole and absolute discretion of Sika either:

(a) supply free-of-charge replacement Product, for any Product that is proved not to so conform; or

(b) refund the purchase price of the Product that is proved not to so conform.

5 Sika shall not be liable for any other claims for loss, damage, costs or expenses of any kind arising out of or attributable to any breach by Sika of the Warranty or negligence or otherwise howsoever and whether direct or consequential in connection with the use of the Product.

6 Sika shall only be liable under this Warranty if notice has been given in writing within seven (7) days (time being of the essence) of any failure or defect of the Product becoming apparent or known. The notice shall include proof of purchase (showing date and place of purchase and name of the reseller). The Claimant shall ensure that Sika is afforded the opportunity to inspect the area affected as soon as practicable after such notification.

7 Save for this Warranty, Sika makes no representation and gives no assurance, condition or warranty of any kind (including any assurance, condition or warranty implied by law to the extent that the assurance, condition or warranty can be lawfully excluded) in relation to the Product and accepts no liability for any assurance, condition, warranty, representation, statement or term not expressly set out in this Warranty. Where the Product is being acquired for business purposes, the provisions of the Consumer Guarantees Act 1993 are specifically excluded.

8 This Warranty replaces and supersedes (1) the limited warranty stated in Sika's Terms and Conditions of Sale (but all other such Terms and Conditions shall not be affected hereby) and (2) all prior warranties that may appear to apply to the Product.

9 This Warranty is only applicable to product quality as defined by the Product Data Sheet and specifically excludes any defects or failures to the extent that they are attributable to building design or workmanship, including product application, preparation or installation of surfaces or substrates by the Claimant or any other party.

10 This Warranty does not cover the effects of movement (opening, closing, or differential) in any horizontal or vertical joint or crack, beyond the capability of the Product, as defined in the Data Sheet, and any other written instructions supplied by Sika, or any visual effects of such movement.

11 This Warranty excludes any damage caused by fair wear and tear, including fading.

12 This Warranty will be invalidated in the event that any remedial work is undertaken in relation to the Product without the prior written approval of Sika.

13 This Warranty shall extend to any replacement quantities of the Product provided but only for the balance of the original Warranty period.

14 This warranty is provided to the original purchaser of the Product and is not transferable or assignable, except to the owner of the property.

15 If any alleged failure or deterioration in the Product is proven to not be the responsibility of Sika, then all costs associated with the investigation of such failure or deterioration shall be borne by the Claimant.

Tony Smith
Business Manager - Distribution

Mike Edwards
General Manager

KAIPARA DISTRICT
Kaipara te Oranganui • Two Oceans Two Harbours

KAIPARA DISTRICT COUNCIL

Private Utility Service As-Built Record

(Section 216, Building Act 2004)

Part A Consent Details (to be completed in all cases)

Building Consent Number 210208
Applicants Name ..... R. Edge + R Randell
Applicants Mailing Address .....
.....
Site Address ..... 8 Sampsons Way, Dargaville

Part B As Built Services Information (to be completed in relation to service provided, ticking each box as appropriate)

Wastewater - Pressure (Pump Make/Model) E-ONE

Connection Diameter
- [x] 40mm
- [ ] 50mm
- [ ] 80mm
- [ ] Other _____ mm

Pipe Material
- [ ] uPVC
- [ ] Vitrified Clay
- [ ] Concrete
- [x] Other HDPE

Connection Type
- [x] Public Utility Service Connection
- [ ] Septic Tank
- [ ] Other _____

Wastewater - Gravity

Connection Diameter
- [ ] 65mm
- [ ] 80mm
- [x] 100mm
- [ ] Other _____ mm

Pipe Material
- [x] uPVC
- [ ] Vitrified Clay
- [ ] Concrete
- [ ] Other _____

Connection Type
- [x] Public Utility Service Connection
- [ ] Soak Hole
- [ ] Stream
- [x] Other E-ONE

Wastewater - Disposal System Description

Septic Tank

Size: _____ litres

Type
- [ ] **Septic tank DECOMMISSIONED**
- [ ] Ecotank
- [ ] Biocycle

Effluent Field

Trench _____ m
- [ ] Deep Soakhole
  - Depth _____ m
  - Number of holes _____ m
- [ ] Other _____

Sanitary Facilities
- [ ] Toilet Number _____
- [ ] Bidet Number _____
- [ ] Urinal Number _____

Waste Disposal Unit
- [ ] No
- [ ] Yes Type _____

Certification

I Derek Hulse being

- [ ] Owner
- [ ] Occupier
- [ ] Craftsman plumber
- [x] Registered drainlayer

Registration Number _____
Registration Number 16049

certify that this Private Utility Service As-Built Record is an accurate representation of the work carried out.

DJ Hulse — Signature

12/12/21 — Date

Stormwater

Pipe Diameter
- [ ] 80mm
- [x] 100mm
- [ ] 150mm
- [ ] 225mm
- [ ] Other _____ mm

Pipe Material
- [x] uPVC
- [ ] Vitrified Clay
- [ ] Ductile Iron
- [ ] Concrete
- [ ] Other _____

Connection Type
- [x] Public Utility Service Connection
- [ ] Soak Hole
- [ ] Stream
- [ ] Drain
- [ ] Other _____

Water Supply

Pipe Material - Cold
- [ ] uPVC
- [ ] Copper
- [ ] Polybutylene
- [ ] Other _____

Hot Water Cylinder
- [ ] High Pressure _____ Litre
- [ ] Low Pressure _____ Litre

Meter Type

Make _____ Model _____

Pipe Material - Hot
- [ ] uPVC
- [ ] Copper
- [ ] Polybutylene
- [ ] Other _____

Diameter _____
Serial Number _____
Reading [ ][ ][ ][ ][ ][ ][ ] m³

(Quote all black figures inclusive of zeros only)

Note Part B As Built Services Information

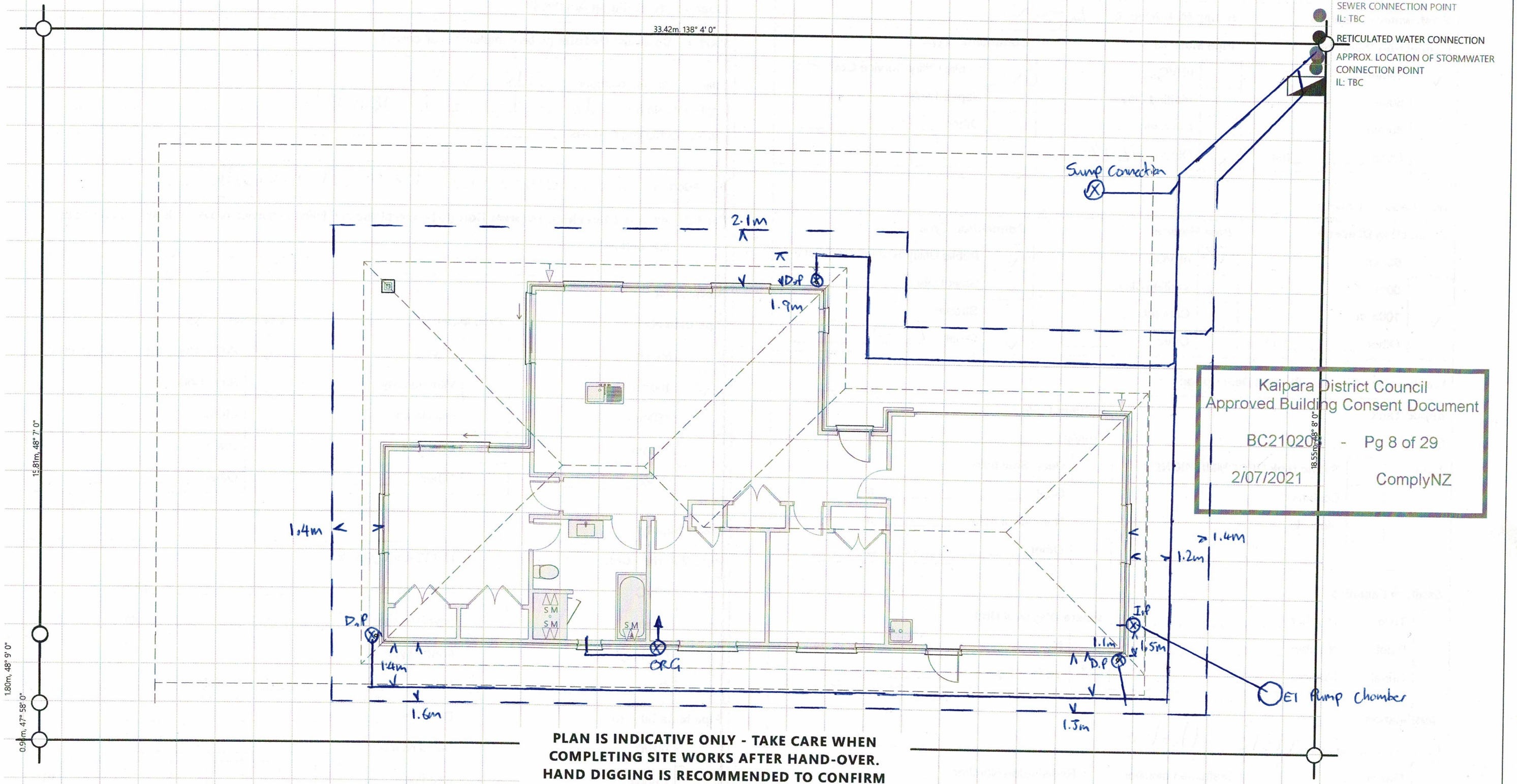

Kaipara District Council
Approved Building Consent Document
BC2102038 - Pg 8 of 29
2/07/2021 ComplyNZ

PLAN IS INDICATIVE ONLY - TAKE CARE WHEN COMPLETING SITE WORKS AFTER HAND-OVER. HAND DIGGING IS RECOMMENDED TO CONFIRM DRAIN LOCATIONS PRIOR TO FUTURE WORK

GRIDLINES SET OUT AT 1.0M CENTRES

G.J. Gardner. HOMES

COPYRIGHT - THIS DRAWING REMAINS THE PROPERTY OF G.J. GARDNER HOMES AND IS PROVIDED FOR THE USE DESCRIBED AND MAY NOT BE USED OR REPRODUCED IN WHOLE OR IN PART WITHOUT PERMISSION

SUDFELT CONSTRUCTION LTD
WHANGAREI / KAIPARA
FRANCHISEE FOR
G.J.GARDNER HOMES
14 PERCY STREET,
KENSINGTON
P (09) 437 5666
www.gjgardner.co.nz

ALL CONSTRUCTION TO COMPLY WITH THE LOCAL AUTHORITY REQUIREMENTS, NZ BUILDING CODE/APPROVED DOCUMENTS, AND MEANS OF COMPLIANCE, INCL. NZS3604:2011

ALL DIMENSION AND LEVELS ARE TO BE CHECKED BY CONTRACTOR PRIOR TO COMMENCEMENT OF WORK. CONTRACTOR TO REPORT ANY DISCREPANCY.

DO NOT SCALE OFF PLANS

NEW DWELLING FOR
EDGE & RANDELL
LOT 8 SAMPSONS WAY
DARGAVILLE
KAIPARA

CONSENT

LEGAL DESCRIPTION
LOT NUMBER: **8**
DP NUMBER: **542244**

SITE INFORMATION
SITE AREA: **619m²**
CORROSION: **C**
DISTRICT PLAN ZONE: **RESIDENTIAL**
WIND ZONE: **HIGH**

PLUMBING & DRAINAGE AS-BUILT

JOB No:	390076
SHEET SIZE:	A3
SCALE:	1:100
DRAWN:	C. LIENERT
PUBLISHED:	30/03/2021

SHEET: 7
CHECKED: MS

TEK
Marshall

RS Eng Ltd

09 4383273
office@RSEng.co.nz
2 Seaview Road,
Whangarei, 0110

File No. 17644

Date 6 August 2021

Time 3:00 PM

BC No. BC210208

Site Inspection Sheet

Health & Safety

Site Induction Completed Yes

Task to be completed
RibRaft inspection

Significant site risks associated with task
Slips, trips and falls

Controls for risk
PPE
Be aware

Accidents or near misses
No

Inspection Details

Project New Dwelling - Randell

Purpose of Inspection RibRaft inspection

Site Address Lot 8, Sampsons Way, Dargaville

Name of Contact Aaron Bates

Contact Email Address Aaron@abfoundations.co.nz

Additional Contact Email No

Comments
3 x HD12 bottom, 1x HD12 top in edge beam with brick rebate.

Internal beam steel and laps okay.

SE72 mesh used.

Garage door rebate detail shows two HD12 at top of footing, an extra bar needs to be added to the top.

Double pipe penetration needs trimmer bars added around perimeter.

re-entrant bars at internal corners are touching pods. Bars need to be lifted approx. 10mm.

Photos to be provided once completed.

Action Required?

As above

Next Inspection	TBC
Email of Engineer	liam@rseng.co.nz
Name of Engineer	Liam Fuller
Signature	

Upload Photos

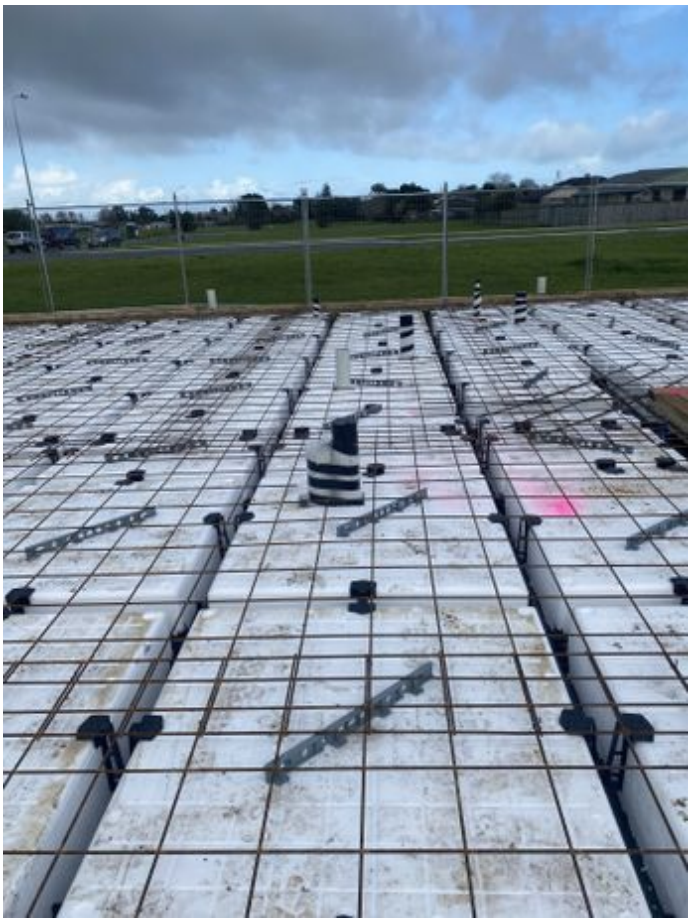

Memorandum from Licensed Building Practitioner

Record of Building Work

Section 88, Building Act 2004

GERARD CERTIFIED ROOFER

BC 210208

The Building Rachyl Edge and Regan Randell

Street Address: 8 Sampsons Way		
Suburb:	Town/City: Dargaville	Postcode: 0310

External Moisture Management System

Work that is restricted building work	Description of restricted building work	Carried out or supervised?
☑ Roof cladding or roof cladding system	Installation of Gerard Roofs pressed steel tiles and accessories per manufacturer's specification.	☐ Carried out ☑ Supervised

Issued By

Name and contact details of the licensed building practitioner who is licensed to carry out or supervise restricted building work

Name: Lucas Hardwick		LBP Number: BP 131196
Class(es) licensed in: Roofing R2 R3		
Address: Po Box 4282		Phone: 027 418 4459
Suburb: Kamo		Fax:
Town/City: Whangarei	Postcode: 0141	Mobile:
Mailing Address: ☐ Same as above?		After Hours Phone:
Suburb:		
Town/City:	Post Code:	
Email Address: johnduffroofing@gmail.com		
Website:		

Declaration

I carried out or supervised the restricted work recorded on this form.

Name	Signature	Date
Lucas Hardwick	Lucas Hardwick	18/10/2021

KAIPARA DISTRICT

Kaipara te Oranganui • Two Oceans Two Harbours

KAIPARA DISTRICT COUNCIL

Producer Statement Construction (PS3)

Construction

ISSUED BUILDING CONSENT NUMBER: BC 210208

THIS PS3 IS ISSUED BY: John Duff Roofing

TO: **KAIPARA DISTRICT COUNCIL**

IN RESPECT OF: Rachyl Edge and Regan Randell

AT (Address): 8 Sampson Way

Dargaville

LEGAL DESCRIPTION - LOT.....DP .....SO .....

FROM: Luke Hardwicke (Installer),

LICENSED BY John Duff Roofing Reg./License No: BP 131196

engaged by GJ Gardner (Owner/Builder)

In respect of clause(s) B1 and B2 of the Building Regulations 1992 for the building work described by the drawings and specifications prepared by the design firm titled;

Battens fixed as per consented plans

numbered.....

.....

authorised variation(s).....(copies attached)

have been issued during the course of the works.

I have sighted the issued building consent and read the conditions. As the contractor/builder I can confirm that the building works have been carried out in accordance with the requirements of the New Zealand Building Code, the conditions of the building consent, the design drawings and specifications and in accordance with the listed variations (if any).

I understand that if this producer statement is accepted, that it may be used to verify that the building work All / Part only as specified in the attached particulars, the subject of this building consent meets, based on reasonable grounds, the requirements of this building consent and the requirements of the Building Code in respect to clauses B1, B2, ...of the Building Regulations 1992.

☑ I understand and accept that Council may rely on this document, for the purposes of establishing compliance with the above building consent and that the content including the signature, whether electronic or not, is truly representative and authoritative of the information contained.

Name: Luke Hardwicke Signature: Date: 18/10/2021

Address: PO Box 4282 Kamo

Contractor/Applicator: John Duff Roofing

Telephone: .....(bus) 027 478 4459 (home) Fax .....

File: 3117.03

Combined Certificate of Compliance and Electrical Safety Certificate

Unique ID: 13700

Note: If you are using this form to provide only an Electrical Safety Certificate, then only complete sections 1, 3 and 5

1. Customer Information

Customer Name: SUGFELT CONSTRUCTION LTD (EXCEL / RANDELL)

Customer Phone / Email:

Location of Installation: 8 SAMPSONS WAY, JARGAVILLE

2. Certifier Information

Certifier Name: KEITH DONALDSON Registration / Practising Licence Number: E281109

Organisation: LABER ELECTRICAL Telephone Number: (09) 438 1686

Email: LEWAKEITH@GMAIL.COM

Name and Registration Number of person(s) involved in work and supervised by certifier: NOAH DAVIS

3. Details of work to which certificate applies

The work is: ☑ an entire installation ☐ a specific part of an installation

The work is: ☑ High Risk ☐ General ☐ Low Risk (Certificate of Compliance not required)

Indicate the number of each item installed or altered:

Number of lighting outlets:	25
Number of socket outlets:	24
Number of ranges:	2
Number of water heaters:	1

General Description of Work: PRE-WIRE & FIT OFF OF NEW INSTALLATION AS PER PLAN INCLUDING MAINS, HWB, OWN & HOT WATER

Tick (✓) if work includes:

- ☑ Mains
- ☑ MEN switchboard closest to point of supply
- ☑ Main Earthing System
- ☐ Electric Lines

Period within / Date on which the work was done: 09.03 2022

The work is safe to be connected to: ☑ 230/400V MEN System ☐ Other (specify)

4. Certificate of Compliance

I am satisfied that the work to which this Certificate of Compliance applies has been done lawfully and safely and the information in this certificate is correct. The work:

- ☐ complies with Part 1 of AS/NZ 3000 ☑ complies with Part 2 of AS/NZ 3000
- ☑ complies with the following standard(s): AS/NZS 3000:2007
- ☐ has been installed in accordance with a certified design (attach or reference*)
- ☑ has an earthing system that is correctly rated
- ☑ contains fittings which are safe to connect to a power supply
- ☐ relies on supplier's Declaration of Conformity (attach or reference*)
- ☐ relies on manufacturer's instructions (attach or reference*)
- ☑ has been satisfactorily tested in accordance with Electricity (Safety) Regulations 2010
- ☑ is safe to connect

Test Results:

	Electrical Worker	Inspector
Polarity (independent earth):	✓	
Insulation resistance:	>500MΩ	
Earth continuity:	0.01Ω	
Bonding:	✓	
Other (specify): EPL	0.47Ω	
	1350	

Electronic reference:

Certifier's Signature: Date: 9.4.22

** If it is impractical to attach a copy of any relevant certified design, manufacturer's instruction or supplier declaration of conformity, provide a reference to where the documents can be found, in a readily accessible format, through electronic means.*

5. Electrical Safety Certificate

Date on which the connection was done: 9.4.22

I am satisfied that the work to which this Electrical Safety Certificate applies is connected to a power supply and is safe to use

Name: KEITH DONALDSON Registration / Practising License Number: E281109

Signature of Connector: Date: 9.4.22

Form 7
Code compliance certificate

Section 95, Building Act 2004

The building

Street address of building:	8 Sampsons Way, Dargaville
Legal description of land where building is located:	Lot 8 DP 542244
Building name:	N/A
Location of building within site/block number:	8 Sampsons Way Dargaville
Level/unit number:	0
Current, lawfully established, use:	2.0 Housing: 2.0.2 Detached Dwelling with 2 occupants
Year first constructed:	2021

The owner

Name of owner:	Rachyl Edge and Regan Randell
Contact person:	Rachyl Edge
Mailing address:	104 Te Kowhai Drive, Maungatapere
Street address/registered office:	N/A
Phone number:	Landline: 094375666 Mobile: N/A
Daytime:	Landline: 094375666 Mobile: N/A
After hours:	Landline: 094375666 Mobile: N/A
Facsimile number:	No information provided
Email address:	rachyledge@gmail.com
Website:	No information provided

First point of contact for communications with the council/building consent authority:
Genna Jones (GJ Gardner); Mailing Address: PO Box 8046
Kensington
Whangarei 0145; Phone: 094375666

Building work

Building consent number:	BC210208
Description:	Construct 3 Bedroom Dwelling with Attached Garage
Issued by:	Kaipara District Council

Code compliance

The building consent authority named below is satisfied, on reasonable grounds, that -
the building work complies with the building consent.

Signature: Aaron Brown
Position: Principal Building Lead
On behalf of: Kaipara District Council
Date: 23 March 2022

Email #48155: BC210208

Project ID: 210208
Date Received: 2021-04-27 11:10:07
Sender: genna.jones@gjgardner.co.nz
Checked By: Michelle Nepia
Accepted By: Sharon Campbell
Subject:

Information Received Via Email: I am currently on Annual Leave Re: BC210208.1 Request For Further Information - 8 Sampsons Way Dargaville

Message:

Hi,
I am currently on Annual Leave returning Monday 3rd May. Please call the main office number 09 4375666 for assistance otherwise I will respond to your email upon my return.
Many Thanks

--

Regards
Genna Jones

Contracts Manager | Sudfelt Construction Ltd -
Whangarei / Kaipara Franchisee for G.J. Gardner Homes
Ph: (09) 437 5666 <+6494375666> | Web: www.gjgardner.co.nz

[image: http://www.gjgardner.co.nz/assets/Uploads/Facebook.jpg] <https://www.facebook.com/GJGardnerHomesNewZealand> [image: http://www.gjgardner.co.nz/assets/Uploads/Pinterest.jpg] <http://www.pinterest.com/GJGardnerNZ/> [image: https://www.gjgardner.co.nz/assets/Uploads/Insta8.jpg] <https://www.instagram.com/gjgardnerhomesnz/?hl>

[image: http://www.gjgardner.co.nz/assets/Uploads/GJGardner.jpg] <http://www.gjgardner.co.nz/>

This email, including attachments, may contain information which is confidential or subject to legal privilege or copyright. If you are not the intended recipient, please notify us immediately and then please delete all copies of this email from your system. You must not use, disseminate, distribute or reproduce this email, any attachments, or any part thereof if you are not the intended recipient.

Email communications are not secure and are not guaranteed by us to be free of unauthorised interference, error or virus. Anyone who communicates with us by email is taken to accept this risk. To the maximum extent permitted by law we are not liable for any virus or other defect in this email or in any attachment (or for any unauthorized changes made to or other interference with this email or to any attachment).

Please note that this communication does not designate an information system for the purposes of the Electronic Transactions Act 2002.

Email #48305: BC210208

Project ID: 210208
Date Received: 2021-05-03 15:50:02
Sender: buildingsupport@kaipara.govt.nz
Checked By: Sharon Campbell
Accepted By: Sharon Campbell
Subject:
Information Received Via Email: ATTN SHARON CAMPBELL FW: 8 Sampsons Way - Ref no. 210208.3
Message:

From: Ean Dawson <ean.dawson@gjgardner.co.nz>
Sent: Monday, 3 May 2021 2:11 pm
To: Building Support <buildingsupport@kaipara.govt.nz>
Cc: Julieanne Mollet <julieanne.mollet@gjgardner.co.nz>; Michael Sudfelt <michael.sudfelt@gjgardner.co.nz>
Subject: 8 Sampsons Way - Ref no. 210208.3

CAUTION: This email originated from outside Kaipara District Council. Do not click links or open attachments unless you recognise the sender and know the content is safe.

Tena koe,

I have had trouble with the online RFI KDC online portal, so I have attached the required calculations and the RFI query below for your reference.

RFI 1: Structural engineer review: The Hawthorn Geddes geotechnical report states that a waffle foundation slab is not suitable for this site due to ground water encountered at less than 0.6m below ground surface.
Please confirm your drainage proposal with the Hawthorn Geddes geotechnical engineer. Provide confirmation that the drainage system proposed would be effective in mitigating the issue with high water
table.

Please find attached calculations provided by RSeng providing the requirements of the subsoil drain.

Please if you have any questions please do not hesitate to contact me.

Ng? mihi nui,
Ean Dawson

Contracts Manager | Sudfelt Construction Ltd - Whangarei / Kaipara Franchisee for G.J. Gardner Homes
Ph: (09) 437 5666<tel:+6494375666> | Web: www.gjgardner.co.nz<http://www.gjgardner.co.nz/>
[http://www.gjgardner.co.nz/assets/Uploads/Facebook.jpg]<https://www.facebook.com/GJGardnerHomesNewZealan

d> [http://www.gjgardner.co.nz/assets/Uploads/Pinterest.jpg] <http://www.pinterest.com/GJGardnerNZ/> [https://www.gjgardner.co.nz/assets/Uploads/Insta8.jpg] <https://www.instagram.com/gjgardnerhomesnz/?hl>

[http://www.gjgardner.co.nz/assets/Uploads/GJGardner.jpg]<http://www.gjgardner.co.nz/>

This email, including attachments, may contain information which is confidential or subject to legal privilege or copyright. If you are not the intended recipient, please notify us immediately and then please delete all copies of this email from your system. You must not use, disseminate, distribute or reproduce this email, any attachments, or any part thereof if you are not the intended recipient.

Email communications are not secure and are not guaranteed by us to be free of unauthorised interference, error or virus. Anyone who communicates with us by email is taken to accept this risk. To the maximum extent permitted by law we are not liable for any virus or other defect in this email or in any attachment (or for any unauthorized changes made to or other interference with this email or to any attachment).

Please note that this communication does not designate an information system for the purposes of the Electronic Transactions Act 2002.

ATTACHMENTS:

- 17644_Calculations_and_markups_2021-02-111.pdf

Email #48349: BC210208

Project ID: 210208
Date Received: 2021-05-05 09:50:02
Sender: julieanne.mollet@gjgardner.co.nz
Checked By: Michelle Nepia
Accepted By: Sharon Campbell
Subject:
Information Received Via Email: Re: BC210208.3 Request For Further Information - 8 Sampsons Way Dargaville
Message:
Hi

Can I please get an update on whether the RFI responses we have submitted for this as being reviewed/accepted?

Thanks

Regards
Julieanne Mollet

Administrator | Sudfelt Construction Ltd -
Whangarei / Kaipara Franchisee for G.J. Gardner Homes
Ph: (09) 437 5666 <+6494375666> | Web: www.gjgardner.co.nz

[image: http://www.gjgardner.co.nz/assets/Uploads/Facebook.jpg] <https://www.facebook.com/GJGardnerHomesNewZealand> [image: http://www.gjgardner.co.nz/assets/Uploads/Pinterest.jpg] <http://www.pinterest.com/GJGardnerNZ/> [image: https://www.gjgardner.co.nz/assets/Uploads/Insta8.jpg] <https://www.instagram.com/gjgardnerhomesnz/?hl>

[image: http://www.gjgardner.co.nz/assets/Uploads/GJGardner.jpg] <http://www.gjgardner.co.nz/>

This email, including attachments, may contain information which is confidential or subject to legal privilege or copyright. If you are not the intended recipient, please notify us immediately and then please delete all copies of this email from your system. You must not use, disseminate, distribute or reproduce this email, any attachments, or any part thereof if you are not the intended recipient.

Email communications are not secure and are not guaranteed by us to be free

of unauthorised interference, error or virus. Anyone who communicates with us by email is taken to accept this risk. To the maximum extent permitted by law we are not liable for any virus or other defect in this email or in any attachment (or for any unauthorized changes made to or other interference with this email or to any attachment).

Please note that this communication does not designate an information system for the purposes of the Electronic Transactions Act 2002

On Fri, 30 Apr 2021 at 13:49, Kaipara District Council <
210208@kdc.abcs.co.nz> wrote:

> Good afternoon,
>
>
> Reference Number: BC210208
> Project Location: 8 Sampsons Way, Dargaville
> Project Description: Construct 3 Bedroom Dwelling with Attached Garage
>
>
> Processing of your building consent application in accordance with s48 of
> the Building Act is currently in progress. The attached letter details
> information which is required to be provided to demonstrate that the
> proposed work will comply with s 48 of the NZ Building Act and Regulations.
> Please note that the processing time clock has been suspended pending this
> information.
>
> So that your information gets to us as promptly as possible, please:
> - ensure you reply directly to this email and the format of our email
> address must be in full as follows: 210208@kdc.abcs.co.nz
> - provide only the information that specifically relates to this project;
> - ensure that all attachments are saved in PDF format;
>
> Following the above will keep your project moving and ensure the
> information is delivered directly to the processor. To speed up processing
> we would request that changes to plans are marked using the "cloud"
> convention - thank you for helping us to help you!
>
> This is the revised RFI that includes the structural review items and the
> only remaining items from RFI 1. If you have any queries, please feel free
> to contact me on 022 697 5120.
>
> Regards,
>

> Sharon Campbell
> Contractor
> Kaipara District Council
> Unit 6 - The Hub, 6 Molesworth Drive, Mangawhai 0505
> P: (09) 439 3123 | E: buildingsupport@kaipara.govt.nz | W:
> www.kaipara.govt.nz
>
>
> ----------
>
> *DISCLAIMER*
>
>
> This message is for the designated recipient(s) only, and may contain
> confidential and/or privileged information.
> If you have received it in error, please delete it and advise the sender
> immediately.
> You should not copy or use it for any other purpose, nor disclose its
> contents to any other person.
>
>
> Designated Recipient(s): whangarei@gjgardner.co.nz
>
> Sent From: AlphaOne Building Consent System
>
> Sent Date: 30 April 2021 13:49 - Friday
>
>

Email #48377: BC210208

Project ID: 210208
Date Received: 2021-05-06 08:15:02
Sender: buildingsupport@kaipara.govt.nz
Checked By: Sharon Campbell
Accepted By: Matthew Bayly
Subject:
Information Received Via Email: ATTN MATT BAYLEY FW: 8 Sampsons Way - Ref no 210208.3
Message:

From: Ean Dawson <ean.dawson@gjgardner.co.nz>
Sent: Wednesday, 5 May 2021 4:15 pm
To: Building Support <buildingsupport@kaipara.govt.nz>
Cc: Julieanne Mollet <julieanne.mollet@gjgardner.co.nz>; Michael Sudfelt <michael.sudfelt@gjgardner.co.nz>
Subject: 8 Sampsons Way - Ref no 210208.3

CAUTION: This email originated from outside Kaipara District Council. Do not click links or open attachments unless you recognise the sender and know the content is safe.

Tena koe,

Please find attached site plan and RFI PIM requests for the above job. I have answered below.

13.10.01a - Excavation and Fill:
Please demonstrate compliance with this rule by providing compliant earthwork volumes

Please find attached a site plan showing the cut/fill schedule and location of earthworks, this is 170m? (under the 200m?) limit under the district plan.

13.10.25 - Vehicle Access and Driveways:
1. Control of reversing provisions will not comply and will therefore be classed as a Restricted Discretionary

Vehicle tracking on the site plan attached is as per AS/NZS 2890.1:2004 (Off Street Car Parking) - B99 Vehicle (Realistic min radius) (2004) without any allowances for lock to lock time (i.e. vehicles are turning lock to lock while stationary). I have modified the driveway to suit the vehicles and also moved the building closer to the road boundary so we do not go over the impermeable areas.

13.10.27 - Parking:
1. Control of reversing provisions will not comply and will therefore be classed as a Restricted Discretionary Activity so resource consent will be required to be obtained before this activity can occur.

As per above, vehicle tracking added for the 2 x vehicles.

Let me know if you require any further information.

Ng? mihi nui,
Ean Dawson

Contracts Manager | Sudfelt Construction Ltd - Whangarei / Kaipara Franchisee for G.J. Gardner Homes
Ph: (09) 437 5666<tel:+6494375666> | Web: www.gjgardner.co.nz<http://www.gjgardner.co.nz/>
[http://www.gjgardner.co.nz/assets/Uploads/Facebook.jpg]<https://www.facebook.com/GJGardnerHomesNewZealand> [http://www.gjgardner.co.nz/assets/Uploads/Pinterest.jpg] <http://www.pinterest.com/GJGardnerNZ/>
[https://www.gjgardner.co.nz/assets/Uploads/Insta8.jpg] <https://www.instagram.com/gjgardnerhomesnz/?hl>

[http://www.gjgardner.co.nz/assets/Uploads/GJGardner.jpg]<http://www.gjgardner.co.nz/>

This email, including attachments, may contain information which is confidential or subject to legal privilege or copyright. If you are not the intended recipient, please notify us immediately and then please delete all copies of this email from your system. You must not use, disseminate, distribute or reproduce this email, any attachments, or any part thereof if you are not the intended recipient.

Email communications are not secure and are not guaranteed by us to be free of unauthorised interference, error or virus. Anyone who communicates with us by email is taken to accept this risk. To the maximum extent permitted by law we are not liable for any virus or other defect in this email or in any attachment (or for any unauthorized changes made to or other interference with this email or to any attachment).

Please note that this communication does not designate an information system for the purposes of the Electronic Transactions Act 2002.

ATTACHMENTS:

- 27 SITE PLAN -RESOURCE CONSENT.pdf

Email #48412: BC210208

Project ID: 210208
Date Received: 2021-05-06 22:25:07
Sender: cathytengineer@gmail.com
Checked By: Cathy
Accepted By: Sharon Campbell
Subject:
Information Received Via Email: Re: BC210208: 8 Sampsons Way Dargaville
Message:
Hi Sharon, no, nothing additional submitted so I have put my response below RFI. Confirmation of drainage design from Hawthorn Geddes required. I am not convinced that a simple drain would be adequate to counter a high water table. Ground conditions around Dargaville can be very problematic with high water table and soft ground conditions. Unfortunately I have witnessed some dramatic results - where a waffle foundation slab tilted/sank approximately 100mm. It's not clear to me why an engineer would take such a design risk. If we have further issues regarding this we will need to escalate it to Greg Bellam. I consider this design high risk.

Regards
Cathy

On Wed, May 5, 2021 at 11:37 AM Kaipara District Council <
210208@kdc.abcs.co.nz> wrote:

> Good morning Cathy,
>
> Please see the response to your RFI. I'm not sure that they've provided
> anything additionally to what was originally submitted?
>
> Regards,
>
> Sharon Campbell
> Contractor
> Kaipara District Council
> Unit 6 - The Hub, 6 Molesworth Drive, Mangawhai 0505
> P: (09) 439 3123 | E: buildingsupport@kaipara.govt.nz | W:
> www.kaipara.govt.nz
>
>
>

> From: Ean Dawson
> Sent: Monday, 3 May 2021 2:11 pm
> To: Building Support
> Cc: Julieanne Mollet ; Michael Sudfelt
> Subject: 8 Sampsons Way - Ref no. 210208.3
>
> CAUTION: This email originated from outside Kaipara District Council. Do
> not click links or open attachments unless you recognise the sender and
> know the content is safe.
>
> Tena koe,
>
> I have had trouble with the online RFI KDC online portal, so I have
> attached the required calculations and the RFI query below for your
> reference.
>
> RFI 1: Structural engineer review: The Hawthorn Geddes geotechnical report
> states that a waffle foundation slab is not suitable for this site due to
> ground water encountered at less than 0.6m below ground surface.
> Please confirm your drainage proposal with the Hawthorn Geddes
> geotechnical engineer. Provide confirmation that the drainage system
> proposed would be effective in mitigating the issue with high water
> table.
>
> Please find attached calculations provided by RSeng providing the
> requirements of the subsoil drain.
>
> Please if you have any questions please do not hesitate to contact me.
>
> Ng? mihi nui,
> Ean Dawson
>
> Contracts Manager | Sudfelt Construction Ltd - Whangarei / Kaipara
> Franchisee for G.J. Gardner Homes
> Ph: (09) 437 5666 | Web: www.gjgardner.co.nz
> [http://www.gjgardner.co.nz/assets/Uploads/Facebook.jpg] [
> http://www.gjgardner.co.nz/assets/Uploads/Pinterest.jpg] [
> https://www.gjgardner.co.nz/assets/Uploads/Insta8.jpg]
>
> [http://www.gjgardner.co.nz/assets/Uploads/GJGardner.jpg]
>
> This email, including attachments, may contain information which is
> confidential or subject to legal privilege or copyright. If you are not the
> intended recipient, please notify us immediately and then please delete all

> copies of this email from your system. You must not use, disseminate,
> distribute or reproduce this email, any attachments, or any part thereof if
> you are not the intended recipient.
>
> Email communications are not secure and are not guaranteed by us to be
> free of unauthorised interference, error or virus. Anyone who communicates
> with us by email is taken to accept this risk. To the maximum extent
> permitted by law we are not liable for any virus or other defect in this
> email or in any attachment (or for any unauthorized changes made to or
> other interference with this email or to any attachment).
>
> Please note that this communication does not designate an information
> system for the purposes of the Electronic Transactions Act 2002.
>
>
> ------------------------------
> *ATTACHMENTS:*
>
> - .
> <https://kdc.abcs.co.nz/a2/public/download/b706aa27-5bd1-38e8-b0f7-e69caa4766e5>
>
>
> ------------------------------
> *DISCLAIMER*
> This message is for the designated recipient(s) only, and may contain
> confidential and/or privileged information. If you have received it in
> error, please delete it and advise the sender immediately. You should not
> copy or use it for any other purpose, nor disclose its contents to any
> other person.
>
> Designated Recipient(s): cathytengineer@gmail.com,
> allocations@complynz.co.nz
> Sent From: AlphaOne Building Consent System
> Sent Date: 5 May 2021 11:37:19 am - Wednesday

Email #48417: BC210208

Project ID: 210208
Date Received: 2021-05-07 11:50:07
Sender: steve@rseng.co.nz
Checked By: Cathy
Accepted By: Sharon Campbell
Subject:

Information Received Via Email: Automatic reply: BC210208.4 Request For Further Information - 8 Sampsons Way Dargaville

Message:

I am on away from the office until Monday 10 May 2021. Please contact the office or email office@rseng.co.nz if urgent. Regards
Steve Turner

Email #48567: BC210208

Project ID: 210208
Date Received: 2021-05-13 13:35:07
Sender: steve@rseng.co.nz
Checked By: Cathy
Accepted By: Shalisha Blom
Subject:

Information Received Via Email: Automatic reply: BC210208.5 Request For Further Information - 8 Sampsons Way Dargaville

Message:

I am on away from the office until Monday 17 May 2021. Please contact the office or email office@rseng.co.nz if urgent. Regards
Steve Turner

Email #48571: BC210208

Project ID: 210208
Date Received: 2021-05-13 14:40:02
Sender: ean.dawson@gjgardner.co.nz
Checked By: Cathy
Accepted By: Sharon Campbell
Subject:
Information Received Via Email: Ref number 210208.5
Message:
Kia ora,

Can Sharon please give me a call on 0274928551. Would just like to clarify RFI 2 of the floor slab.

If this could be done as soon as possible it would be appreciated.

*Ng**? mihi nui,*
Ean Dawson

Contracts Manager | Sudfelt Construction Ltd -
Whangarei / Kaipara Franchisee for G.J. Gardner Homes
Ph: (09) 437 5666 <+6494375666> | Web: www.gjgardner.co.nz

[image: http://www.gjgardner.co.nz/assets/Uploads/Facebook.jpg] <https://www.facebook.com/GJGardnerHomesNewZealand> [image: http://www.gjgardner.co.nz/assets/Uploads/Pinterest.jpg] <http://www.pinterest.com/GJGardnerNZ/> [image: https://www.gjgardner.co.nz/assets/Uploads/Insta8.jpg] <https://www.instagram.com/gjgardnerhomesnz/?hl>

[image: http://www.gjgardner.co.nz/assets/Uploads/GJGardner.jpg] <http://www.gjgardner.co.nz/>

This email, including attachments, may contain information which is confidential or subject to legal privilege or copyright. If you are not the intended recipient, please notify us immediately and then please delete all copies of this email from your system. You must not use, disseminate, distribute or reproduce this email, any attachments, or any part thereof if you are not the intended recipient.

Email communications are not secure and are not guaranteed by us to be free

of unauthorised interference, error or virus. Anyone who communicates with us by email is taken to accept this risk. To the maximum extent permitted by law we are not liable for any virus or other defect in this email or in any attachment (or for any unauthorized changes made to or other interference with this email or to any attachment).

Please note that this communication does not designate an information system for the purposes of the Electronic Transactions Act 2002.

Email #48948: BC210208

Project ID: 210208
Date Received: 2021-05-28 10:35:04
Sender: no-reply@abcs.co.nz
Checked By: Cathy
Accepted By: Sharon Campbell
Subject:
Information Received Via Email: BC210208: New Documents Uploaded
Message:

Attention: BC210208 Assigned Staff
There are new document(s) that have been uploaded on BC210208 and these are:
390076_-_EDGE_-_SITE_PLAN_HOUSE_MOVE_-28-05-21.pdf

To view these documents, click the "Documents" button and accept them from there.
Generated by:AlphaOne Building Consent Systemwww.abcs.co.nz | www.alphaonebuildingconsent.comDate & Time: 28 May 2021, 10:30 am - Friday | Signature Hash: 17dec6d4cb471825103fce46348d528f729b04dbATTENTION: Please do not reply to this email as the mailbox is unattended.
DISCLAIMER

This message is for the designated recipient(s) only, and may contain confidential and/or privileged information.
If you have received it in error, please delete it and advise the sender immediately.
You should not copy or use it for any other purpose, nor disclose its contents to any other person.

Designated Recipient(s): 210208@kdc.abcs.co.nz
Sent From: AlphaOne Building Consent System
Sent Date: 28 May 2021 10:30 - Friday

Email #49003: BC210208

Project ID: 210208
Date Received: 2021-05-31 13:00:07
Sender: sharon.campbell@complynz.co.nz
Checked By: Sharon Campbell
Accepted By: Sharon Campbell
Subject:
Information Received Via Email: Fwd: Site Plan - BC210208
Message:
With kind regards

*Sharon Campbell*Building Consent Processor - *ComplyNZ*

Unit 16
Level 2, Silverstream Retail Village
42 Silverstream Boulevard
P.O. Box 23, Woodend 7641

*P *03 310 0272

www.complynz.co.nz <http://www.complynz.co.nz/>

This email and any accompanying attachments may contain confidential and proprietary information. This information is private and protected by law and, accordingly, if you are not the intended recipient, you are requested to delete this entire communication immediately and are notified that any disclosure, copying or distribution of or taking any action based on this information is prohibited. If you have received the message in error, please notify the sender immediately by return email and delete the email.

ComplyNZ Ltd does not accept any liability or responsibility for any interception, corruption, destruction, loss, late arrival, or incompleteness, tampering or interference of any information contained in this email. Nor for its incorrect delivery or non-delivery for whatsoever reason or for its effect on any electronic device of the recipient.

If verification of this email or any attachment is required, please request a hard-copy version.

---------- Forwarded message ---------
From: Ean Dawson <ean.dawson@gjgardner.co.nz>

Date: Mon, 31 May 2021 at 11:12
Subject: Site Plan - BC210208
To: <sharon.campbell@complynz.co.nz>
Cc: Julieanne Mollet <julieanne.mollet@gjgardner.co.nz>, Kelsey Newman <knewman@kaipara.govt.nz>

Morena Sharon,

Thank you for taking my phone call earlier today.

As requested please find attached the revised site plan with the setback to Sampson's way.

If you could please include in our building consent set and you can add a Section 32 on the property until we rectify the 'Deemed Permitted Boundary Activity' sign off from N.T.A/KDC roading division.

*Ng**? mihi nui,*
Ean Dawson

Contracts Manager | Sudfelt Construction Ltd -
Whangarei / Kaipara Franchisee for G.J. Gardner Homes
Ph: (09) 437 5666 <+6494375666> | Web: www.gjgardner.co.nz

[image: http://www.gjgardner.co.nz/assets/Uploads/Facebook.jpg] <https://www.facebook.com/GJGardnerHomesNewZealand> [image: http://www.gjgardner.co.nz/assets/Uploads/Pinterest.jpg] <http://www.pinterest.com/GJGardnerNZ/> [image: https://www.gjgardner.co.nz/assets/Uploads/Insta8.jpg] <https://www.instagram.com/gjgardnerhomesnz/?hl>

[image: http://www.gjgardner.co.nz/assets/Uploads/GJGardner.jpg] <http://www.gjgardner.co.nz/>

This email, including attachments, may contain information which is confidential or subject to legal privilege or copyright. If you are not the intended recipient, please notify us immediately and then please delete all copies of this email from your system. You must not use, disseminate, distribute or reproduce this email, any attachments, or any part thereof if you are not the intended recipient.

Email communications are not secure and are not guaranteed by us to be free of unauthorised interference, error or virus. Anyone who communicates with us by email is taken to accept this risk. To the maximum extent permitted

by law we are not liable for any virus or other defect in this email or in any attachment (or for any unauthorized changes made to or other interference with this email or to any attachment).

Please note that this communication does not designate an information system for the purposes of the Electronic Transactions Act 2002.

ATTACHMENTS:

- 390076 - EDGE - SITE PLAN HOUSE MOVE -28-05-21 1.pdf

Email #49022: BC210208

Project ID: 210208
Date Received: 2021-05-31 17:20:02
Sender: sharon.campbell@complynz.co.nz
Checked By: Sharon Campbell
Accepted By: Sharon Campbell
Subject:
Information Received Via Email: Fwd: Site Plan - BC210208
Message:
For reference.

With kind regards

*Sharon Campbell*Building Consent Processor - *ComplyNZ*

Unit 16
Level 2, Silverstream Retail Village
42 Silverstream Boulevard
P.O. Box 23, Woodend 7641

*P *03 310 0272

www.complynz.co.nz <http://www.complynz.co.nz/>

This email and any accompanying attachments may contain confidential and proprietary information. This information is private and protected by law and, accordingly, if you are not the intended recipient, you are requested to delete this entire communication immediately and are notified that any disclosure, copying or distribution of or taking any action based on this information is prohibited. If you have received the message in error, please notify the sender immediately by return email and delete the email.

ComplyNZ Ltd does not accept any liability or responsibility for any interception, corruption, destruction, loss, late arrival, or incompleteness, tampering or interference of any information contained in this email. Nor for its incorrect delivery or non-delivery for whatsoever reason or for its effect on any electronic device of the recipient.

If verification of this email or any attachment is required, please request a hard-copy version.

---------- Forwarded message ---------
From: Ean Dawson <ean.dawson@gjgardner.co.nz>
Date: Mon, 31 May 2021 at 16:52
Subject: Re: Site Plan - BC210208
To: <sharon.campbell@complynz.co.nz>
Cc: Julieanne Mollet <julieanne.mollet@gjgardner.co.nz>, Kelsey Newman <knewman@kaipara.govt.nz>, Michael Sudfelt <michael.sudfelt@gjgardner.co.nz>

Kia ora Sharon,

Thanks for the returned phone call.

As discussed the planning department has said we require RC for this job.
Please disregard the site plan I issued as of this morning.

Sorry for the inconvenience.

*Ng**? mihi nui,*
Ean Dawson

Contracts Manager | Sudfelt Construction Ltd -
Whangarei / Kaipara Franchisee for G.J. Gardner Homes
Ph: (09) 437 5666 <+6494375666> | Web: www.gjgardner.co.nz

[image: http://www.gjgardner.co.nz/assets/Uploads/Facebook.jpg] <https://www.facebook.com/GJGardnerHomesNewZealand> [image: http://www.gjgardner.co.nz/assets/Uploads/Pinterest.jpg] <http://www.pinterest.com/GJGardnerNZ/> [image: https://www.gjgardner.co.nz/assets/Uploads/Insta8.jpg] <https://www.instagram.com/gjgardnerhomesnz/?hl>

[image: http://www.gjgardner.co.nz/assets/Uploads/GJGardner.jpg] <http://www.gjgardner.co.nz/>

This email, including attachments, may contain information which is confidential or subject to legal privilege or copyright. If you are not the intended recipient, please notify us immediately and then please delete all copies of this email from your system. You must not use, disseminate, distribute or reproduce this email, any attachments, or any part thereof if you are not the intended recipient.

Email communications are not secure and are not guaranteed by us to be free of unauthorised interference, error or virus. Anyone who communicates with us by email is taken to accept this risk. To the maximum extent permitted

by law we are not liable for any virus or other defect in this email or in any attachment (or for any unauthorized changes made to or other interference with this email or to any attachment).

Please note that this communication does not designate an information system for the purposes of the Electronic Transactions Act 2002.

On Mon, 31 May 2021 at 11:12, Ean Dawson <ean.dawson@gjgardner.co.nz> wrote:

> Morena Sharon,
>
> Thank you for taking my phone call earlier today.
>
> As requested please find attached the revised site plan with the setback
> to Sampson's way.
>
> If you could please include in our building consent set and you can add a
> Section 32 on the property until we rectify the 'Deemed Permitted Boundary
> Activity' sign off from N.T.A/KDC roading division.
>
>
> *Ng**? mihi nui,*
> *Ean Dawson*
>
> Contracts Manager | Sudfelt Construction Ltd -
> Whangarei / Kaipara Franchisee for G.J. Gardner Homes
> Ph: (09) 437 5666 <+6494375666> | Web: www.gjgardner.co.nz
>
> [image: http://www.gjgardner.co.nz/assets/Uploads/Facebook.jpg]
> <https://www.facebook.com/GJGardnerHomesNewZealand> [image:
> http://www.gjgardner.co.nz/assets/Uploads/Pinterest.jpg]
> <http://www.pinterest.com/GJGardnerNZ/> [image:
> https://www.gjgardner.co.nz/assets/Uploads/Insta8.jpg]
> <https://www.instagram.com/gjgardnerhomesnz/?hl>
>
> [image: http://www.gjgardner.co.nz/assets/Uploads/GJGardner.jpg]
> <http://www.gjgardner.co.nz/>
>
> This email, including attachments, may contain information which is
> confidential or subject to legal privilege or copyright. If you are not the
> intended recipient, please notify us immediately and then please delete all
> copies of this email from your system. You must not use, disseminate,
> distribute or reproduce this email, any attachments, or any part thereof if
> you are not the intended recipient.

>
>
> Email communications are not secure and are not guaranteed by us to be
> free of unauthorised interference, error or virus. Anyone who communicates
> with us by email is taken to accept this risk. To the maximum extent
> permitted by law we are not liable for any virus or other defect in this
> email or in any attachment (or for any unauthorized changes made to or
> other interference with this email or to any attachment).
>
>
> Please note that this communication does not designate an information
> system for the purposes of the Electronic Transactions Act 2002.
>

Email #49389: BC210208

Project ID: 210208
Date Received: 2021-06-14 13:30:05
Sender: ean.dawson@gjgardner.co.nz
Checked By: Cathy
Accepted By: Kelsey Newman
Subject:
Information Received Via Email: Fwd: FW: 8 Sampsons Way
Message:
Tena koe,

Please find following email I sent to the Planning department of KDC for your information.

*Ng**? mihi nui,*
Ean Dawson

Contracts Manager | Sudfelt Construction Ltd -
Whangarei / Kaipara Franchisee for G.J. Gardner Homes
Ph: (09) 437 5666 <+6494375666> | Web: www.gjgardner.co.nz

[image: http://www.gjgardner.co.nz/assets/Uploads/Facebook.jpg] <https://www.facebook.com/GJGardnerHomesNewZealand> [image: http://www.gjgardner.co.nz/assets/Uploads/Pinterest.jpg] <http://www.pinterest.com/GJGardnerNZ/> [image: https://www.gjgardner.co.nz/assets/Uploads/Insta8.jpg] <https://www.instagram.com/gjgardnerhomesnz/?hl>

[image: http://www.gjgardner.co.nz/assets/Uploads/GJGardner.jpg] <http://www.gjgardner.co.nz/>

This email, including attachments, may contain information which is confidential or subject to legal privilege or copyright. If you are not the intended recipient, please notify us immediately and then please delete all copies of this email from your system. You must not use, disseminate, distribute or reproduce this email, any attachments, or any part thereof if you are not the intended recipient.

Email communications are not secure and are not guaranteed by us to be free of unauthorised interference, error or virus. Anyone who communicates with us by email is taken to accept this risk. To the maximum extent permitted

by law we are not liable for any virus or other defect in this email or in any attachment (or for any unauthorized changes made to or other interference with this email or to any attachment).

Please note that this communication does not designate an information system for the purposes of the Electronic Transactions Act 2002.

---------- Forwarded message ---------
From: Ean Dawson <ean.dawson@gjgardner.co.nz>
Date: Mon, 14 Jun 2021 at 11:01
Subject: Re: FW: 8 Sampsons Way
To: Kelsey Newman <knewman@kaipara.govt.nz>, <wrobinson@kaipara.govt.nz>
Cc: Julieanne.Mollet@gjgardner.co.nz <Julieanne.Mollet@gjgardner.co.nz>, Michael Sudfelt <michael.sudfelt@gjgardner.co.nz>

Kia ora Kelsey and Wendy,

Please find attached site plan with turning circles and maneuverability for the two x vehicles as well as the framed Gobi Block's around the driveway.

Please advise if this satisfies the requirement for *not *applying for RC.

*Ng**? mihi nui,*
Ean Dawson

Contracts Manager | Sudfelt Construction Ltd -
Whangarei / Kaipara Franchisee for G.J. Gardner Homes
Ph: (09) 437 5666 <+6494375666> | Web: www.gjgardner.co.nz

[image: http://www.gjgardner.co.nz/assets/Uploads/Facebook.jpg] <https://www.facebook.com/GJGardnerHomesNewZealand> [image: http://www.gjgardner.co.nz/assets/Uploads/Pinterest.jpg] <http://www.pinterest.com/GJGardnerNZ/> [image: https://www.gjgardner.co.nz/assets/Uploads/Insta8.jpg] <https://www.instagram.com/gjgardnerhomesnz/?hl>

[image: http://www.gjgardner.co.nz/assets/Uploads/GJGardner.jpg] <http://www.gjgardner.co.nz/>

This email, including attachments, may contain information which is confidential or subject to legal privilege or copyright. If you are not the intended recipient, please notify us immediately and then please delete all copies of this email from your system. You must not use, disseminate, distribute or reproduce this email, any attachments, or any part thereof if

you are not the intended recipient.

Email communications are not secure and are not guaranteed by us to be free of unauthorised interference, error or virus. Anyone who communicates with us by email is taken to accept this risk. To the maximum extent permitted by law we are not liable for any virus or other defect in this email or in any attachment (or for any unauthorized changes made to or other interference with this email or to any attachment).

Please note that this communication does not designate an information system for the purposes of the Electronic Transactions Act 2002.

On Fri, 11 Jun 2021 at 14:09, Michael Sudfelt <
michael.sudfelt@gjgardner.co.nz> wrote:

> Thanks Kelsey,
>
> *Regards*
> *Michael Sudfelt*
>
>
>
> Franchise Owner | Sudfelt Construction Ltd -
> Whangarei / Kaipara Franchisee for G.J. Gardner Homes
> Mob: 027 527 4527 <+64275274527> | Ph: (09) 437 5666 <+6494375666> |
> Web: www.gjgardner.co.nz
>
> [image: http://www.gjgardner.co.nz/assets/Uploads/Facebook.jpg]
> <https://www.facebook.com/GJGardnerHomesNewZealand> [image:
> http://www.gjgardner.co.nz/assets/Uploads/Pinterest.jpg]
> <http://www.pinterest.com/GJGardnerNZ/> [image:
> https://www.gjgardner.co.nz/assets/Uploads/Insta8.jpg]
> <https://www.instagram.com/gjgardnerhomesnz/?hl>
>
>
>
> [image: http://www.gjgardner.co.nz/assets/Uploads/GJGardner.jpg]
> <http://www.gjgardner.co.nz/>
>
>
>
> This email, including attachments, may contain information which is
> confidential or subject to legal privilege or copyright. If you are not the
> intended recipient, please notify us immediately and then please delete all

> copies of this email from your system. You must not use, disseminate,
> distribute or reproduce this email, any attachments, or any part thereof if
> you are not the intended recipient.
>
> Email communications are not secure and are not guaranteed by us to be
> free of unauthorised interference, error or virus. Anyone who communicates
> with us by email is taken to accept this risk. To the maximum extent
> permitted by law we are not liable for any virus or other defect in this
> email or in any attachment (or for any unauthorized changes made to or
> other interference with this email or to any attachment).
>
> Please note that this communication does not designate an information
> system for the purposes of the Electronic Transactions Act 2002.
>
>
> On Thu, Jun 10, 2021 at 10:51 AM Kelsey Newman <knewman@kaipara.govt.nz>
> wrote:
>
>> Hello there,
>>
>>
>>
>> Apologies regarding the miss information I provided, Wendy and I had a
>> chat to clarify this.
>>
>>
>>
>> The plan that you have proposed that shows a 0.5m front setback breach
>> has been looked at and the manoeuvring area is in compliance.
>>
>>
>>
>> In regards to the gobi blocks or the materials excluded from the
>> impermeable surface materials, showing these on the site plan would be
>> helpful. Council can allow permeable pavers to be used such as gobi
>> blocks. Within KDC District Plan Appendix 25A, which states in Section 6.1:
>>
>>
>>
>> - *"Permeable surfaces such as gravel, gobi-blocks or other permeable
>> paving systems can be used on driveways, parking places and pathways to
>> allow storm water to percolate directly into the underlying sub-soil". *
>>
>>

>>
>> Regarding the Deemed Permitted Marginal Activity, I double checked with
>> Wendy and unfortunately council does not process Deemed Permitted Marginal
>> Activities for Manoeuvring Beaches as it is an access issue.
>>
>>
>>
>> I hope this answers your questions and thank you for your patience.
>>
>>
>>
>> Ng? mihi nui,
>>
>>
>>
>> Kelsey
>>
>>
>>
>>
>>
>> [image: KDC Logo test June 2015]
>>
>> Kelsey Newman | Graduate Planner
>>
>> Kaipara District Council, Private Bag 1001, Dargaville 0340
>>
>> Freephone: 0800 727 059 | DDI: 09 439 3123 | Cell: 021 391 351
>>
>> knewman@kaipara.govt.nz | council@kaipara.govt.nz | www.kaipara.govt.nz
>>
>>
>>
>> *Please be advised that any statements made by the Council's Resource
>> Consent Helpdesk team are for the purposes of providing general guidance
>> only, and are not to be relied upon as advice for the purposes of assessing
>> particular proposals. Recipients are advised that they need to seek their
>> own independent professional advice and make their own enquiries.
>> Furthermore, any general guidance given by the Council's Resource Consent
>> Helpdesk team does not have any bearing on the position that the Council
>> may take in its regulatory capacity.*
>>
>>
>>

>> *The Council makes no warranty, express or implied, nor assumes any legal
>> liability or responsibility for the accuracy, correctness, completeness or
>> use of any information or views communicated as part of the Resource
>> Consent Helpdesk service. To the extent permissible by law, the Council
>> expressly disclaims any liability to the applicant (under any theory of law
>> including negligence) in relation to any duty.*
>>
>>
>>
>>
>>
>>
>>
>>
>>
>>
>> *From:* Wendy Robinson <wrobinson@kaipara.govt.nz>
>> *Sent:* Wednesday, 2 June 2021 2:23 pm
>> *To:* Kelsey Newman <knewman@kaipara.govt.nz>
>> *Subject:* FW: FW: 8 Sampsons Way
>>
>>
>>
>> Hi Kelsey,
>>
>>
>>
>> Any chance you could check this one again before he lodges?
>>
>>
>>
>> Ng? mihi,
>>
>> Wendy
>>
>>
>>
>> *From:* Michael Sudfelt <michael.sudfelt@gjgardner.co.nz>
>> *Sent:* Wednesday, 2 June 2021 12:50 PM
>> *To:* Wendy Robinson <wrobinson@kaipara.govt.nz>
>> *Cc:* Ean Dawson <ean.dawson@gjgardner.co.nz>; Julieanne Mollet
>> <Julieanne.Mollet@gjgardner.co.nz <Julieanne.Mollet@gjgardner.co.nz>>
>> *Subject:* Fwd: FW: 8 Sampsons Way
>>
>>

>>
>> CAUTION: This email originated from outside Kaipara District Council. Do
>> not click links or open attachments unless you recognise the sender and
>> know the content is safe.
>>
>>
>>
>> Hi Wendy,
>>
>>
>>
>> Thanks for your chat just now.
>>
>>
>>
>> To offer further clarity I've attached the plans, PIM & form 4 which this
>> all relates to.
>>
>>
>>
>> I also attach the plan we are proposing that shows a 0.5m front setback
>> breach which we believe enables for the onsite turning to work, while
>> remaining inside the impervious surfaces limits.
>>
>>
>>
>> Before we go down this track any further do you think you could have
>> someone check this to make sure we all agree the only breach with this
>> proposal is the front setback? I'd hate to carry on and then find someone
>> doesn't agree with our on site turning working..
>>
>>
>>
>> Also with regards to 'gobi blocks' or something to that effect, are you
>> able to confirm that if we were to show these on the site plan as part of
>> the driveway, will they count against our impervious surface area?
>>
>>
>>
>> And one last thought, given that the on site turning is soooo very close
>> to complying with the district plan, could we leave as is and apply for
>> "Deemed Permitted Marginal Activity"? From having a read through the
>> attached guidance I would consider that the breach is marginal, and that
>> any potential effects on any person would be 'less than minor'..

>>
>>
>>
>> Thanks heaps for your attention on this one.
>>
>>
>>
>> Kind regards,
>>
>>
>> *Regards*
>> *Michael Sudfelt*
>>
>>
>>
>> Franchise Owner | Sudfelt Construction Ltd -
>> Whangarei / Kaipara Franchisee for G.J. Gardner Homes
>> Mob: 027 527 4527 <+64275274527> | Ph: (09) 437 5666 <+6494375666> |
>> Web: www.gjgardner.co.nz
>>
>> <https://www.facebook.com/GJGardnerHomesNewZealand>
>> <http://www.pinterest.com/GJGardnerNZ/>
>> <https://www.instagram.com/gjgardnerhomesnz/?hl>
>>
>>
>>
>> <http://www.gjgardner.co.nz/>
>>
>>
>>
>> This email, including attachments, may contain information which is
>> confidential or subject to legal privilege or copyright. If you are not the
>> intended recipient, please notify us immediately and then please delete all
>> copies of this email from your system. You must not use, disseminate,
>> distribute or reproduce this email, any attachments, or any part thereof if
>> you are not the intended recipient.
>>
>> Email communications are not secure and are not guaranteed by us to be
>> free of unauthorised interference, error or virus. Anyone who communicates
>> with us by email is taken to accept this risk. To the maximum extent
>> permitted by law we are not liable for any virus or other defect in this
>> email or in any attachment (or for any unauthorized changes made to or
>> other interference with this email or to any attachment).
>>

>> Please note that this communication does not designate an information
>> system for the purposes of the Electronic Transactions Act 2002.
>>
>>
>>
>> ---------- Forwarded message ---------
>> From: *Julieanne Mollet* <julieanne.mollet@gjgardner.co.nz>
>> Date: Mon, May 31, 2021 at 4:27 PM
>> Subject: Fwd: FW: 8 Sampsons Way
>> To: Michael Sudfelt <michael.sudfelt@gjgardner.co.nz>
>>
>>
>>
>>
>> *Regards*
>> *Julieanne Mollet*
>>
>>
>>
>> Administrator | Sudfelt Construction Ltd -
>> Whangarei / Kaipara Franchisee for G.J. Gardner Homes
>> Ph: (09) 437 5666 <+6494375666> | Web: www.gjgardner.co.nz
>>
>> <https://www.facebook.com/GJGardnerHomesNewZealand>
>> <http://www.pinterest.com/GJGardnerNZ/>
>> <https://www.instagram.com/gjgardnerhomesnz/?hl>
>>
>>
>>
>> <http://www.gjgardner.co.nz/>
>>
>>
>>
>> This email, including attachments, may contain information which is
>> confidential or subject to legal privilege or copyright. If you are not the
>> intended recipient, please notify us immediately and then please delete all
>> copies of this email from your system. You must not use, disseminate,
>> distribute or reproduce this email, any attachments, or any part thereof if
>> you are not the intended recipient.
>>
>> Email communications are not secure and are not guaranteed by us to be
>> free of unauthorised interference, error or virus. Anyone who communicates
>> with us by email is taken to accept this risk. To the maximum extent
>> permitted by law we are not liable for any virus or other defect in this

>> email or in any attachment (or for any unauthorized changes made to or
>> other interference with this email or to any attachment).
>>
>> Please note that this communication does not designate an information
>> system for the purposes of the Electronic Transactions Act 2002
>>
>>
>>
>> ---------- Forwarded message ---------
>> From: *Andy Brown | NTA* <Andy.Brown@nta.govt.nz>
>> Date: Mon, 31 May 2021 at 15:12
>> Subject: FW: 8 Sampsons Way
>> To: Julieanne Mollet <julieanne.mollet@gjgardner.co.nz>
>> Cc: Wendy Robinson <wrobinson@kaipara.govt.nz>
>>
>>
>>
>> Hi Julieanne,
>>
>>
>>
>> Apologies for not getting back to you but I was concerned we had the
>> wrong information on this. Below is confirmation that I was correct and
>> the Resource Consents manager is happy to Discuss as per below.
>>
>>
>>
>>
>>
>>
>> Kind regards
>>
>> Andy
>>
>>
>>
>> *From:* Wendy Robinson <wrobinson@kaipara.govt.nz>
>> *Sent:* Monday, 31 May 2021 3:02 PM
>> *To:* Andy Brown | NTA <Andy.Brown@nta.govt.nz>
>> *Subject:* RE: 8 Sampsons Way
>>
>>
>>
>> Hi Andy,
>>

>>
>>
>> Definitely not sure what is happening on this one. Deemed Permitted
>> Boundary Activities only relate to side and rear setbacks, not front
>> setbacks. Feel free to have them call me directly.
>>
>>
>>
>> Ng? mihi,
>>
>> Wendy
>>
>>
>>
>> [image: KDC Logo test June 2015] <http://www.kaipara.govt.nz/>
>>
>> Wendy Robinson | Resource Consents Manager
>>
>> Mangawhai Office: Unit 6, The Hub, 6 Molesworth Drive, Mangawhai 0505
>>
>> Kaipara District Council, Private Bag 1001, Dargaville 0340
>>
>> Freephone: 0800 727 059 | Phone: 021 579 937
>>
>> *wrobinson*@kaipara.govt.nz | council@kaipara.govt.nz |
>> www.kaipara.govt.nz
>>
>>
>>
>>
>>
>>
>>
>> *From:* Andy Brown | NTA <Andy.Brown@nta.govt.nz>
>> *Sent:* Monday, 31 May 2021 12:43 PM
>> *To:* Wendy Robinson <wrobinson@kaipara.govt.nz>
>> *Subject:* FW: 8 Sampsons Way
>>
>>
>>
>> CAUTION: This email originated from outside Kaipara District Council. Do
>> not click links or open attachments unless you recognise the sender and
>> know the content is safe.
>>

>>
>>
>> FYI for discussion if needed
>>
>>
>>
>> *From:* Andy Brown | NTA
>> *Sent:* Wednesday, 26 May 2021 10:05 AM
>> *To:* Julieanne Mollet <julieanne.mollet@gjgardner.co.nz>; Simon
>> Megchelse | NTA <Simon.Megchelse@nta.govt.nz>; Michael Sudfelt <
>> michael.sudfelt@gjgardner.co.nz>
>> *Subject:* RE: 8 Sampsons Way
>>
>>
>>
>> Hi Julieanne
>>
>>
>>
>> Could you please provide back a form that has no detail in the affected
>> parties section so I can complete in full? I am not in the office today
>> but can print, fill in & sign and return tomorrow when I am back in the
>> office.
>>
>>
>>
>>
>>
>> Regards
>>
>> Andy
>>
>>
>>
>>
>>
>> *From:* Julieanne Mollet <julieanne.mollet@gjgardner.co.nz>
>> *Sent:* Wednesday, 26 May 2021 9:23 AM
>> *To:* Simon Megchelse | NTA <Simon.Megchelse@nta.govt.nz>; Andy Brown |
>> NTA <Andy.Brown@nta.govt.nz>; Michael Sudfelt <
>> michael.sudfelt@gjgardner.co.nz>
>> *Subject:* Fwd: 8 Sampsons Way
>>
>>

>>
>> Hi Andy and Simon
>>
>>
>>
>> Just following up on the below email. We are keen to get this submitted
>> to Council as soon as possible for our client. Would you be able to let us
>> know when we can expect this back? Or did you have any queries on the
>> details we had sent through?
>>
>>
>> *Regards*
>> *Julieanne Mollet*
>>
>>
>>
>> Administrator | Sudfelt Construction Ltd -
>> Whangarei / Kaipara Franchisee for G.J. Gardner Homes
>> Ph: (09) 437 5666 <+6494375666> | Web: www.gjgardner.co.nz
>>
>> [image: Image removed by sender.]
>> <https://www.facebook.com/GJGardnerHomesNewZealand> [image: Image
>> removed by sender.] <http://www.pinterest.com/GJGardnerNZ/> [image:
>> Image removed by sender.]
>> <https://www.instagram.com/gjgardnerhomesnz/?hl>
>>
>>
>>
>> [image: Image removed by sender.] <http://www.gjgardner.co.nz/>
>>
>>
>>
>> This email, including attachments, may contain information which is
>> confidential or subject to legal privilege or copyright. If you are not the
>> intended recipient, please notify us immediately and then please delete all
>> copies of this email from your system. You must not use, disseminate,
>> distribute or reproduce this email, any attachments, or any part thereof if
>> you are not the intended recipient.
>>
>> Email communications are not secure and are not guaranteed by us to be
>> free of unauthorised interference, error or virus. Anyone who communicates
>> with us by email is taken to accept this risk. To the maximum extent
>> permitted by law we are not liable for any virus or other defect in this
>> email or in any attachment (or for any unauthorized changes made to or

>> other interference with this email or to any attachment).
>>
>> Please note that this communication does not designate an information
>> system for the purposes of the Electronic Transactions Act 2002
>>
>>
>>
>> ---------- Forwarded message ---------
>> From: *Julieanne Mollet* <julieanne.mollet@gjgardner.co.nz>
>> Date: Thu, 20 May 2021 at 09:17
>> Subject: Fwd: 8 Sampsons Way
>> To: <Andy.Brown@nta.govt.nz>, <Simon.Megchelse@nta.govt.nz>
>> Cc: Michael Sudfelt <michael.sudfelt@gjgardner.co.nz>
>>
>>
>>
>> Hi Andy and Simon
>>
>>
>>
>> Further to the below email correspondence with Michael, please see
>> attached the Affected Party Deemed Permitted Boundary Activity form and
>> plan for signoff. If you can please sign and return both for us, that
>> would be great.
>>
>>
>> *Regards*
>> *Julieanne Mollet*
>>
>>
>>
>> Administrator | Sudfelt Construction Ltd -
>> Whangarei / Kaipara Franchisee for G.J. Gardner Homes
>> Ph: (09) 437 5666 <+6494375666> | Web: www.gjgardner.co.nz
>>
>> [image: Image removed by sender.]
>> <https://www.facebook.com/GJGardnerHomesNewZealand> [image: Image
>> removed by sender.] <http://www.pinterest.com/GJGardnerNZ/> [image:
>> Image removed by sender.]
>> <https://www.instagram.com/gjgardnerhomesnz/?hl>
>>
>>
>>
>> [image: Image removed by sender.] <http://www.gjgardner.co.nz/>

>>
>>
>>
>> This email, including attachments, may contain information which is
>> confidential or subject to legal privilege or copyright. If you are not the
>> intended recipient, please notify us immediately and then please delete all
>> copies of this email from your system. You must not use, disseminate,
>> distribute or reproduce this email, any attachments, or any part thereof if
>> you are not the intended recipient.
>>
>> Email communications are not secure and are not guaranteed by us to be
>> free of unauthorised interference, error or virus. Anyone who communicates
>> with us by email is taken to accept this risk. To the maximum extent
>> permitted by law we are not liable for any virus or other defect in this
>> email or in any attachment (or for any unauthorized changes made to or
>> other interference with this email or to any attachment).
>>
>> Please note that this communication does not designate an information
>> system for the purposes of the Electronic Transactions Act 2002
>>
>>
>>
>> ---------- Forwarded message ---------
>>
>> From: *Michael Sudfelt* <michael.sudfelt@gjgardner.co.nz>
>> Date: Tue, May 18, 2021 at 9:10 AM
>> Subject: Re: 8 Sampsons Way
>> To: Andy Brown | NTA <Andy.Brown@nta.govt.nz>
>> Cc: Simon Megchelse | NTA <Simon.Megchelse@nta.govt.nz>
>>
>>
>>
>> Thanks heaps Andy,
>>
>>
>>
>> The KDC planner had asked us to complete a 'deemed permitted boundary
>> activity' form and have that signed off by roading, and then they would
>> consider that before approving. If you're happy I'll get that completed and
>> through for your sign off as the 'affected party', and then back to the
>> planners for sign off?
>>
>>
>>

>> Thank you!
>>
>>
>> *Regards*
>> *Michael Sudfelt*
>>
>>
>>
>> Franchise Owner | Sudfelt Construction Ltd -
>> Whangarei / Kaipara Franchisee for G.J. Gardner Homes
>> Mob: 027 527 4527 <+64275274527> | Ph: (09) 437 5666 <+6494375666> |
>> Web: www.gjgardner.co.nz
>>
>> [image: Image removed by sender.]
>> <https://www.facebook.com/GJGardnerHomesNewZealand> [image: Image
>> removed by sender.] <http://www.pinterest.com/GJGardnerNZ/> [image:
>> Image removed by sender.]
>> <https://www.instagram.com/gjgardnerhomesnz/?hl>
>>
>>
>>
>> [image: Image removed by sender.] <http://www.gjgardner.co.nz/>
>>
>>
>>
>> This email, including attachments, may contain information which is
>> confidential or subject to legal privilege or copyright. If you are not the
>> intended recipient, please notify us immediately and then please delete all
>> copies of this email from your system. You must not use, disseminate,
>> distribute or reproduce this email, any attachments, or any part thereof if
>> you are not the intended recipient.
>>
>> Email communications are not secure and are not guaranteed by us to be
>> free of unauthorised interference, error or virus. Anyone who communicates
>> with us by email is taken to accept this risk. To the maximum extent
>> permitted by law we are not liable for any virus or other defect in this
>> email or in any attachment (or for any unauthorized changes made to or
>> other interference with this email or to any attachment).
>>
>> Please note that this communication does not designate an information
>> system for the purposes of the Electronic Transactions Act 2002.
>>
>>
>>

>>
>>
>> On Tue, May 18, 2021 at 9:04 AM Andy Brown | NTA <Andy.Brown@nta.govt.nz>
>> wrote:
>>
>> Good morning Simon and Michael,
>>
>>
>>
>> I have no objection to the proposal as pointed out in the bullet points
>> from Simon below it does not interfere with future use ect and would not
>> look significantly out of place.
>>
>>
>>
>> Please note however this response does not sever as approval for your
>> resource consent application as the proposed changes are not in line with
>> the district plan requirements so this becomes a matter for the KDC
>> resource consents team to work through with the applicant.
>>
>>
>>
>> Kind regards
>>
>> Andy Brown
>>
>>
>>
>> *From:* Simon Megchelse | NTA <Simon.Megchelse@nta.govt.nz>
>> *Sent:* Tuesday, 18 May 2021 8:59 AM
>> *To:* Andy Brown | NTA <Andy.Brown@nta.govt.nz>
>> *Cc:* michael.sudfelt@gjgardner.co.nz
>> *Subject:* FW: 8 Sampsons Way
>>
>>
>>
>> Good morning Andy
>>
>>
>>
>> As discussed yesterday please assess this request from Michael at G.J
>> Gardener and advise KDC's/NTA's considerations as an affected party,
>> typically RCA's can reasonably support reduced boundary set back of
>> building from road front boundary subject to;

>>
>> ? Sight Lines for motorists not being compromised
>>
>> ? Will not impact any upgrade to roads formation
>>
>> ? Not a habitable room proposed to be set closer to the road
>> boundary (i.e. garage okay)
>>
>>
>>
>> As the asset owner could you please reply back to Michael, this will
>> allow G.J's to progress with any change to their Planning/Building consent
>> application.
>>
>>
>>
>> Regards
>>
>>
>>
>> *Simon Megchelse*
>>
>> *Road Corridor Coordinator *
>>
>> *Whangarei District Council **| *Forum North | Private Bag 9023,
>> Whangarei 0148 | www.wdc.govt.nz
>>
>> *P **09 430 4200* | *DDI **09 4703031* | *M** 0272703820* | *E:*
>> *simon.megchelse@wdc.govt.nz* <simon.megchelse@wdc.govt.nz>
>>
>> [image: NTA Horizontal long - full colour]
>>
>>
>>
>>
>>
>>
>>
>>
>>
>>
>>
>> *From:* Michael Sudfelt <michael.sudfelt@gjgardner.co.nz>
>> *Sent:* Monday, May 17, 2021 3:11 PM
>> *To:* Simon Megchelse | NTA <Simon.Megchelse@nta.govt.nz>
>> *Subject:* 8 Sampsons Way

>>
>>
>>
>> Hi Simon,
>>
>>
>>
>> As discussed this afternoon, we are having trouble complying with the
>> Kaipara District plan. To achieve suitable on site turning for this modest
>> 3 bedroom home we are finding that we are going over the allowable
>> impervious surface restrictions.
>>
>>
>>
>> To stay within this requirement we are proposing that we bring the house
>> forward to 4.0m off the road front boundary. Please see attached copy of
>> proposed site plan.
>>
>>
>>
>> I've taken a screenshot from google maps which shows the 'way' which
>> might be of some assistance.
>>
>>
>>
>> Please let me know if you have any questions. If you think this is
>> something you would be happy to support, could you please let me know and I
>> will get the form the KDC council will want completed to support our
>> application.
>>
>>
>>
>> Thank heaps,
>>
>>
>>
>>
>>
>> *Regards*
>> *Michael Sudfelt*
>>
>>
>>
>> Franchise Owner | Sudfelt Construction Ltd -

>> Whangarei / Kaipara Franchisee for G.J. Gardner Homes
>> Mob: 027 527 4527 <+64275274527> | Ph: (09) 437 5666 <+6494375666> |
>> Web: www.gjgardner.co.nz
>>
>> <https://www.facebook.com/GJGardnerHomesNewZealand>
>> <http://www.pinterest.com/GJGardnerNZ/>
>> <https://www.instagram.com/gjgardnerhomesnz/?hl>
>>
>>
>>
>> <http://www.gjgardner.co.nz/>
>>
>>
>>
>> This email, including attachments, may contain information which is
>> confidential or subject to legal privilege or copyright. If you are not the
>> intended recipient, please notify us immediately and then please delete all
>> copies of this email from your system. You must not use, disseminate,
>> distribute or reproduce this email, any attachments, or any part thereof if
>> you are not the intended recipient.
>>
>> Email communications are not secure and are not guaranteed by us to be
>> free of unauthorised interference, error or virus. Anyone who communicates
>> with us by email is taken to accept this risk. To the maximum extent
>> permitted by law we are not liable for any virus or other defect in this
>> email or in any attachment (or for any unauthorized changes made to or
>> other interference with this email or to any attachment).
>>
>> Please note that this communication does not designate an information
>> system for the purposes of the Electronic Transactions Act 2002.
>>
>>
>>
>> The Northland Transportation Alliance is a partnership between all four
>> councils within Northland and Waka Kotahi (NZTA). The information contained
>> within this email may be confidential. Therefore, if you have received this
>> in error, you should delete it immediately and advise the sender noting
>> that information contained within this communication should not be used or
>> transmitted in any format.
>>
>> The Northland Transportation Alliance is a partnership between all four
>> councils within Northland and Waka Kotahi (NZTA). The information contained
>> within this email may be confidential. Therefore, if you have received this
>> in error, you should delete it immediately and advise the sender noting

>> that information contained within this communication should not be used or
>> transmitted in any format.
>>
>> The Northland Transportation Alliance is a partnership between all four
>> councils within Northland and Waka Kotahi (NZTA). The information contained
>> within this email may be confidential. Therefore, if you have received this
>> in error, you should delete it immediately and advise the sender noting
>> that information contained within this communication should not be used or
>> transmitted in any format.
>>
>

REJECTED ATTACHMENT(S):
Note: The listed file(s) below were rejected because they were not in PDF format.
- image001.jpg
- image002.jpg
- image003.jpg
- image004.jpg
- image005.png
- image006.png
- image007.png
- image008.jpg
- image009.jpg
- image010.jpg

Email #49415: BC210208

Project ID: 210208
Date Received: 2021-06-15 09:30:07
Sender: ean.dawson@gjgardner.co.nz
Checked By: Cathy
Accepted By: Kelsey Newman
Subject:
Information Received Via Email: Re: BC210208: 8 Sampsons Way Dargaville
Message:
Morena Kelsey,

I had indicated the turning circles of both vehicles on the drawings that work within the driveway and Gobi blocks, The vehicles tracking is as per AS/NZS 2890.1:2004 (Off Street Car Parking) - B99 Vehicle (Realistic min radius) (2004) without any allowances for lock to lock time (i.e. vehicles are turning lock to lock while stationary).

So I believe that this should suffice planning requirements?

*Ng**? mihi nui,*
Ean Dawson

Contracts Manager | Sudfelt Construction Ltd -
Whangarei / Kaipara Franchisee for G.J. Gardner Homes
Ph: (09) 437 5666 <+6494375666> | Web: www.gjgardner.co.nz

[image: http://www.gjgardner.co.nz/assets/Uploads/Facebook.jpg] <https://www.facebook.com/GJGardnerHomesNewZealand> [image: http://www.gjgardner.co.nz/assets/Uploads/Pinterest.jpg] <http://www.pinterest.com/GJGardnerNZ/> [image: https://www.gjgardner.co.nz/assets/Uploads/Insta8.jpg] <https://www.instagram.com/gjgardnerhomesnz/?hl>

[image: http://www.gjgardner.co.nz/assets/Uploads/GJGardner.jpg] <http://www.gjgardner.co.nz/>

This email, including attachments, may contain information which is confidential or subject to legal privilege or copyright. If you are not the intended recipient, please notify us immediately and then please delete all copies of this email from your system. You must not use, disseminate, distribute or reproduce this email, any attachments, or any part thereof if

you are not the intended recipient.

Email communications are not secure and are not guaranteed by us to be free of unauthorised interference, error or virus. Anyone who communicates with us by email is taken to accept this risk. To the maximum extent permitted by law we are not liable for any virus or other defect in this email or in any attachment (or for any unauthorized changes made to or other interference with this email or to any attachment).

Please note that this communication does not designate an information system for the purposes of the Electronic Transactions Act 2002.

On Tue, 15 Jun 2021 at 08:46, Kaipara District Council <
210208@kdc.abcs.co.nz> wrote:

> Morena,
>
> Thank you for the updated site plan. From looking at the plan the use of
> impermeable 'Gobi Blocks' as a border of the driveway allows compliance
> with the impermeable surface Rule within the District Plan. The only
> remaining breaches are 13.10.25 and 13.10.27 due to the turning circle.
>
>
> Kelsey Newman
> Planning Team
> Kaipara District Council
> Unit 6 - The Hub, 6 Molesworth Drive, Mangawhai 0505
> P: (09) 439 3123 | E: buildingsupport@kaipara.govt.nz | W:
> www.kaipara.govt.nz
>
>
>
>
> ==>
> Tena koe,
>
> Please find following email I sent to the Planning department of KDC for
> your information.
>
> *Ng**? mihi nui,*
> *Ean Dawson*
>
> Contracts Manager | Sudfelt Construction Ltd -
> Whangarei / Kaipara Franchisee for G.J. Gardner Homes

> Ph: (09) 437 5666 | Web: www.gjgardner.co.nz
>
> [image: http://www.gjgardner.co.nz/assets/Uploads/Facebook.jpg]
> [image:
> http://www.gjgardner.co.nz/assets/Uploads/Pinterest.jpg]
> [image:
> https://www.gjgardner.co.nz/assets/Uploads/Insta8.jpg]
>
>
> [image: http://www.gjgardner.co.nz/assets/Uploads/GJGardner.jpg]
>
>
> This email, including attachments, may contain information which is
> confidential or subject to legal privilege or copyright. If you are not the
> intended recipient, please notify us immediately and then please delete all
> copies of this email from your system. You must not use, disseminate,
> distribute or reproduce this email, any attachments, or any part thereof if
> you are not the intended recipient.
>
> Email communications are not secure and are not guaranteed by us to be free
> of unauthorised interference, error or virus. Anyone who communicates with
> us by email is taken to accept this risk. To the maximum extent permitted
> by law we are not liable for any virus or other defect in this email or in
> any attachment (or for any unauthorized changes made to or other
> interference with this email or to any attachment).
>
> Please note that this communication does not designate an information
> system for the purposes of the Electronic Transactions Act 2002.
>
> ---------- Forwarded message ---------
> From: Ean Dawson
> Date: Mon, 14 Jun 2021 at 11:01
> Subject: Re: FW: 8 Sampsons Way
> To: Kelsey Newman ,
> Cc: Julieanne.Mollet@gjgardner.co.nz ,
> Michael Sudfelt
>
> Kia ora Kelsey and Wendy,
>
> Please find attached site plan with turning circles and maneuverability for
> the two x vehicles as well as the framed Gobi Block's around the driveway.
>
> Please advise if this satisfies the requirement for *not *applying for RC.
>

> *Ng**? mihi nui,*
> *Ean Dawson*
>
> Contracts Manager | Sudfelt Construction Ltd -
> Whangarei / Kaipara Franchisee for G.J. Gardner Homes
> Ph: (09) 437 5666 | Web: www.gjgardner.co.nz
>
> [image: http://www.gjgardner.co.nz/assets/Uploads/Facebook.jpg]
> [image:
> http://www.gjgardner.co.nz/assets/Uploads/Pinterest.jpg]
> [image:
> https://www.gjgardner.co.nz/assets/Uploads/Insta8.jpg]
>
>
> [image: http://www.gjgardner.co.nz/assets/Uploads/GJGardner.jpg]
>
>
> This email, including attachments, may contain information which is
> confidential or subject to legal privilege or copyright. If you are not the
> intended recipient, please notify us immediately and then please delete all
> copies of this email from your system. You must not use, disseminate,
> distribute or reproduce this email, any attachments, or any part thereof if
> you are not the intended recipient.
>
> Email communications are not secure and are not guaranteed by us to be free
> of unauthorised interference, error or virus. Anyone who communicates with
> us by email is taken to accept this risk. To the maximum extent permitted
> by law we are not liable for any virus or other defect in this email or in
> any attachment (or for any unauthorized changes made to or other
> interference with this email or to any attachment).
>
> Please note that this communication does not designate an information
> system for the purposes of the Electronic Transactions Act 2002.
>
> On Fri, 11 Jun 2021 at 14:09, Michael Sudfelt
> wrote:
>
> > Thanks Kelsey,
> >
> > *Regards*
> > *Michael Sudfelt*
> >
> >
> >

> > Franchise Owner | Sudfelt Construction Ltd -
> > Whangarei / Kaipara Franchisee for G.J. Gardner Homes
> > Mob: 027 527 4527 | Ph: (09) 437 5666 |
> > Web: www.gjgardner.co.nz
> >
> > [image: http://www.gjgardner.co.nz/assets/Uploads/Facebook.jpg]
> > [image:
> > http://www.gjgardner.co.nz/assets/Uploads/Pinterest.jpg]
> > [image:
> > https://www.gjgardner.co.nz/assets/Uploads/Insta8.jpg]
> >
> >
> >
> >
> > [image: http://www.gjgardner.co.nz/assets/Uploads/GJGardner.jpg]
> >
> >
> >
> >
> > This email, including attachments, may contain information which is
> > confidential or subject to legal privilege or copyright. If you are not
> the
> > intended recipient, please notify us immediately and then please delete
> all
> > copies of this email from your system. You must not use, disseminate,
> > distribute or reproduce this email, any attachments, or any part thereof
> if
> > you are not the intended recipient.
> >
> > Email communications are not secure and are not guaranteed by us to be
> > free of unauthorised interference, error or virus. Anyone who
> communicates
> > with us by email is taken to accept this risk. To the maximum extent
> > permitted by law we are not liable for any virus or other defect in this
> > email or in any attachment (or for any unauthorized changes made to or
> > other interference with this email or to any attachment).
> >
> > Please note that this communication does not designate an information
> > system for the purposes of the Electronic Transactions Act 2002.
> >
> >
> > On Thu, Jun 10, 2021 at 10:51 AM Kelsey Newman
> > wrote:
> >

> >> Hello there,
> >>
> >>
> >>
> >> Apologies regarding the miss information I provided, Wendy and I had a
> >> chat to clarify this.
> >>
> >>
> >>
> >> The plan that you have proposed that shows a 0.5m front setback breach
> >> has been looked at and the manoeuvring area is in compliance.
> >>
> >>
> >>
> >> In regards to the gobi blocks or the materials excluded from the
> >> impermeable surface materials, showing these on the site plan would be
> >> helpful. Council can allow permeable pavers to be used such as gobi
> >> blocks. Within KDC District Plan Appendix 25A, which states in Section
> 6.1:
> >>
> >>
> >>
> >> - *"Permeable surfaces such as gravel, gobi-blocks or other permeable
> >> paving systems can be used on driveways, parking places and pathways to
> >> allow storm water to percolate directly into the underlying sub-soil". *
> >>
> >>
> >>
> >> Regarding the Deemed Permitted Marginal Activity, I double checked with
> >> Wendy and unfortunately council does not process Deemed Permitted
> Marginal
> >> Activities for Manoeuvring Beaches as it is an access issue.
> >>
> >>
> >>
> >> I hope this answers your questions and thank you for your patience.
> >>
> >>
> >>
> >> Ng? mihi nui,
> >>
> >>
> >>
> >> Kelsey

> >>
> >>
> >>
> >>
> >>
> >> [image: KDC Logo test June 2015]
> >>
> >> Kelsey Newman | Graduate Planner
> >>
> >> Kaipara District Council, Private Bag 1001, Dargaville 0340
> >>
> >> Freephone: 0800 727 059 | DDI: 09 439 3123 | Cell: 021 391 351
> >>
> >> knewman@kaipara.govt.nz | council@kaipara.govt.nz | www.kaipara.govt.nz
> >>
> >>
> >>
> >> *Please be advised that any statements made by the Council's Resource
> >> Consent Helpdesk team are for the purposes of providing general guidance
> >> only, and are not to be relied upon as advice for the purposes of
> assessing
> >> particular proposals. Recipients are advised that they need to seek
> their
> >> own independent professional advice and make their own enquiries.
> >> Furthermore, any general guidance given by the Council's Resource
> Consent
> >> Helpdesk team does not have any bearing on the position that the Council
> >> may take in its regulatory capacity.*
> >>
> >>
> >>
> >> *The Council makes no warranty, express or implied, nor assumes any
> legal
> >> liability or responsibility for the accuracy, correctness, completeness
> or
> >> use of any information or views communicated as part of the Resource
> >> Consent Helpdesk service. To the extent permissible by law, the Council
> >> expressly disclaims any liability to the applicant (under any theory of
> law
> >> including negligence) in relation to any duty.*
> >>
> >>
> >>
> >>

> >>
> >>
> >>
> >>
> >>
> >> *From:* Wendy Robinson
> >> *Sent:* Wednesday, 2 June 2021 2:23 pm
> >> *To:* Kelsey Newman
> >> *Subject:* FW: FW: 8 Sampsons Way
> >>
> >>
> >>
> >> Hi Kelsey,
> >>
> >>
> >>
> >> Any chance you could check this one again before he lodges?
> >>
> >>
> >>
> >> Ng? mihi,
> >>
> >> Wendy
> >>
> >>
> >>
> >> *From:* Michael Sudfelt
> >> *Sent:* Wednesday, 2 June 2021 12:50 PM
> >> *To:* Wendy Robinson
> >> *Cc:* Ean Dawson ; Julieanne Mollet
> >>
> >> *Subject:* Fwd: FW: 8 Sampsons Way
> >>
> >>
> >>
> >> CAUTION: This email originated from outside Kaipara District Council. Do
> >> not click links or open attachments unless you recognise the sender and
> >> know the content is safe.
> >>
> >>
> >>
> >> Hi Wendy,
> >>
> >>
> >>

> >>
> >> Thanks for your chat just now.
> >>
> >>
> >>
> >> To offer further clarity I've attached the plans, PIM & form 4 which
> this
> >> all relates to.
> >>
> >>
> >>
> >> I also attach the plan we are proposing that shows a 0.5m front setback
> >> breach which we believe enables for the onsite turning to work, while
> >> remaining inside the impervious surfaces limits.
> >>
> >>
> >>
> >> Before we go down this track any further do you think you could have
> >> someone check this to make sure we all agree the only breach with this
> >> proposal is the front setback? I'd hate to carry on and then find
> someone
> >> doesn't agree with our on site turning working..
> >>
> >>
> >>
> >> Also with regards to 'gobi blocks' or something to that effect, are you
> >> able to confirm that if we were to show these on the site plan as part
> of
> >> the driveway, will they count against our impervious surface area?
> >>
> >>
> >>
> >> And one last thought, given that the on site turning is soooo very close
> >> to complying with the district plan, could we leave as is and apply for
> >> "Deemed Permitted Marginal Activity"? From having a read through the
> >> attached guidance I would consider that the breach is marginal, and that
> >> any potential effects on any person would be 'less than minor'..
> >>
> >>
> >>
> >> Thanks heaps for your attention on this one.
> >>
> >>
> >>
> >>

> >> Kind regards,
> >>
> >>
> >> *Regards*
> >> *Michael Sudfelt*
> >>
> >>
> >>
> >> Franchise Owner | Sudfelt Construction Ltd -
> >> Whangarei / Kaipara Franchisee for G.J. Gardner Homes
> >> Mob: 027 527 4527 | Ph: (09) 437 5666 |
> >> Web: www.gjgardner.co.nz
> >>
> >>
> >>
> >>
> >>
> >>
> >>
> >>
> >>
> >>
> >>
> >>
> >> This email, including attachments, may contain information which is
> >> confidential or subject to legal privilege or copyright. If you are not
> the
> >> intended recipient, please notify us immediately and then please delete
> all
> >> copies of this email from your system. You must not use, disseminate,
> >> distribute or reproduce this email, any attachments, or any part
> thereof if
> >> you are not the intended recipient.
> >>
> >> Email communications are not secure and are not guaranteed by us to be
> >> free of unauthorised interference, error or virus. Anyone who
> communicates
> >> with us by email is taken to accept this risk. To the maximum extent
> >> permitted by law we are not liable for any virus or other defect in this
> >> email or in any attachment (or for any unauthorized changes made to or
> >> other interference with this email or to any attachment).
> >>
> >> Please note that this communication does not designate an information
> >> system for the purposes of the Electronic Transactions Act 2002.
> >>

> >>
> >>
> >> ---------- Forwarded message ---------
> >> From: *Julieanne Mollet*
> >> Date: Mon, May 31, 2021 at 4:27 PM
> >> Subject: Fwd: FW: 8 Sampsons Way
> >> To: Michael Sudfelt
> >>
> >>
> >>
> >>
> >> *Regards*
> >> *Julieanne Mollet*
> >>
> >>
> >>
> >> Administrator | Sudfelt Construction Ltd -
> >> Whangarei / Kaipara Franchisee for G.J. Gardner Homes
> >> Ph: (09) 437 5666 | Web: www.gjgardner.co.nz
> >>
> >>
> >>
> >>
> >>
> >>
> >>
> >>
> >>
> >>
> >>
> >>
> >> This email, including attachments, may contain information which is
> >> confidential or subject to legal privilege or copyright. If you are not
> the
> >> intended recipient, please notify us immediately and then please delete
> all
> >> copies of this email from your system. You must not use, disseminate,
> >> distribute or reproduce this email, any attachments, or any part
> thereof if
> >> you are not the intended recipient.
> >>
> >> Email communications are not secure and are not guaranteed by us to be
> >> free of unauthorised interference, error or virus. Anyone who
> communicates
> >> with us by email is taken to accept this risk. To the maximum extent

> >> permitted by law we are not liable for any virus or other defect in this
> >> email or in any attachment (or for any unauthorized changes made to or
> >> other interference with this email or to any attachment).
> >>
> >> Please note that this communication does not designate an information
> >> system for the purposes of the Electronic Transactions Act 2002
> >>
> >>
> >>
> >> ---------- Forwarded message ---------
> >> From: *Andy Brown | NTA*
> >> Date: Mon, 31 May 2021 at 15:12
> >> Subject: FW: 8 Sampsons Way
> >> To: Julieanne Mollet
> >> Cc: Wendy Robinson
> >>
> >>
> >>
> >> Hi Julieanne,
> >>
> >>
> >>
> >> Apologies for not getting back to you but I was concerned we had the
> >> wrong information on this. Below is confirmation that I was correct and
> >> the Resource Consents manager is happy to Discuss as per below.
> >>
> >>
> >>
> >>
> >>
> >> Kind regards
> >>
> >> Andy
> >>
> >>
> >>
> >> *From:* Wendy Robinson
> >> *Sent:* Monday, 31 May 2021 3:02 PM
> >> *To:* Andy Brown | NTA
> >> *Subject:* RE: 8 Sampsons Way
> >>
> >>
> >>
> >> Hi Andy,

> >>
> >>
> >>
> >> Definitely not sure what is happening on this one. Deemed Permitted
> >> Boundary Activities only relate to side and rear setbacks, not front
> >> setbacks. Feel free to have them call me directly.
> >>
> >>
> >>
> >> Ng? mihi,
> >>
> >> Wendy
> >>
> >>
> >>
> >> [image: KDC Logo test June 2015]
> >>
> >> Wendy Robinson | Resource Consents Manager
> >>
> >> Mangawhai Office: Unit 6, The Hub, 6 Molesworth Drive, Mangawhai 0505
> >>
> >> Kaipara District Council, Private Bag 1001, Dargaville 0340
> >>
> >> Freephone: 0800 727 059 | Phone: 021 579 937
> >>
> >> *wrobinson*@kaipara.govt.nz | council@kaipara.govt.nz |
> >> www.kaipara.govt.nz
> >>
> >>
> >>
> >>
> >>
> >>
> >>
> >> *From:* Andy Brown | NTA
> >> *Sent:* Monday, 31 May 2021 12:43 PM
> >> *To:* Wendy Robinson
> >> *Subject:* FW: 8 Sampsons Way
> >>
> >>
> >>
> >> CAUTION: This email originated from outside Kaipara District Council. Do
> >> not click links or open attachments unless you recognise the sender and
> >> know the content is safe.

> >>
> >>
> >>
> >> FYI for discussion if needed
> >>
> >>
> >>
> >> *From:* Andy Brown | NTA
> >> *Sent:* Wednesday, 26 May 2021 10:05 AM
> >> *To:* Julieanne Mollet ; Simon
> >> Megchelse | NTA ; Michael Sudfelt
> > michael.sudfelt@gjgardner.co.nz>
> >> *Subject:* RE: 8 Sampsons Way
> >>
> >>
> >>
> >> Hi Julieanne
> >>
> >>
> >>
> >> Could you please provide back a form that has no detail in the affected
> >> parties section so I can complete in full? I am not in the office today
> >> but can print, fill in & sign and return tomorrow when I am back in the
> >> office.
> >>
> >>
> >>
> >>
> >>
> >> Regards
> >>
> >> Andy
> >>
> >>
> >>
> >>
> >>
> >> *From:* Julieanne Mollet
> >> *Sent:* Wednesday, 26 May 2021 9:23 AM
> >> *To:* Simon Megchelse | NTA ; Andy Brown |
> >> NTA ; Michael Sudfelt
> > michael.sudfelt@gjgardner.co.nz>
> >> *Subject:* Fwd: 8 Sampsons Way
> >>

> >>
> >>
> >> Hi Andy and Simon
> >>
> >>
> >>
> >> Just following up on the below email. We are keen to get this submitted
> >> to Council as soon as possible for our client. Would you be able to let
> us
> >> know when we can expect this back? Or did you have any queries on the
> >> details we had sent through?
> >>
> >>
> >> *Regards*
> >> *Julieanne Mollet*
> >>
> >>
> >>
> >> Administrator | Sudfelt Construction Ltd -
> >> Whangarei / Kaipara Franchisee for G.J. Gardner Homes
> >> Ph: (09) 437 5666 | Web: www.gjgardner.co.nz
> >>
> >> [image: Image removed by sender.]
> >> [image: Image
> >> removed by sender.] [image:
> >> Image removed by sender.]
> >>
> >>
> >>
> >>
> >> [image: Image removed by sender.]
> >>
> >>
> >>
> >> This email, including attachments, may contain information which is
> >> confidential or subject to legal privilege or copyright. If you are not
> the
> >> intended recipient, please notify us immediately and then please delete
> all
> >> copies of this email from your system. You must not use, disseminate,
> >> distribute or reproduce this email, any attachments, or any part
> thereof if
> >> you are not the intended recipient.
> >>

> >> Email communications are not secure and are not guaranteed by us to be
> >> free of unauthorised interference, error or virus. Anyone who
> communicates
> >> with us by email is taken to accept this risk. To the maximum extent
> >> permitted by law we are not liable for any virus or other defect in this
> >> email or in any attachment (or for any unauthorized changes made to or
> >> other interference with this email or to any attachment).
> >>
> >> Please note that this communication does not designate an information
> >> system for the purposes of the Electronic Transactions Act 2002
> >>
> >>
> >>
> >> ---------- Forwarded message ---------
> >> From: *Julieanne Mollet*
> >> Date: Thu, 20 May 2021 at 09:17
> >> Subject: Fwd: 8 Sampsons Way
> >> To: ,
> >> Cc: Michael Sudfelt
> >>
> >>
> >>
> >> Hi Andy and Simon
> >>
> >>
> >>
> >> Further to the below email correspondence with Michael, please see
> >> attached the Affected Party Deemed Permitted Boundary Activity form and
> >> plan for signoff. If you can please sign and return both for us, that
> >> would be great.
> >>
> >>
> >> *Regards*
> >> *Julieanne Mollet*
> >>
> >>
> >>
> >> Administrator | Sudfelt Construction Ltd -
> >> Whangarei / Kaipara Franchisee for G.J. Gardner Homes
> >> Ph: (09) 437 5666 | Web: www.gjgardner.co.nz
> >>
> >> [image: Image removed by sender.]
> >> [image: Image
> >> removed by sender.] [image:

> >> Image removed by sender.]
> >>
> >>
> >>
> >>
> >> [image: Image removed by sender.]
> >>
> >>
> >>
> >> This email, including attachments, may contain information which is
> >> confidential or subject to legal privilege or copyright. If you are not
> the
> >> intended recipient, please notify us immediately and then please delete
> all
> >> copies of this email from your system. You must not use, disseminate,
> >> distribute or reproduce this email, any attachments, or any part
> thereof if
> >> you are not the intended recipient.
> >>
> >> Email communications are not secure and are not guaranteed by us to be
> >> free of unauthorised interference, error or virus. Anyone who
> communicates
> >> with us by email is taken to accept this risk. To the maximum extent
> >> permitted by law we are not liable for any virus or other defect in this
> >> email or in any attachment (or for any unauthorized changes made to or
> >> other interference with this email or to any attachment).
> >>
> >> Please note that this communication does not designate an information
> >> system for the purposes of the Electronic Transactions Act 2002
> >>
> >>
> >>
> >> ---------- Forwarded message ---------
> >>
> >> From: *Michael Sudfelt*
> >> Date: Tue, May 18, 2021 at 9:10 AM
> >> Subject: Re: 8 Sampsons Way
> >> To: Andy Brown | NTA
> >> Cc: Simon Megchelse | NTA
> >>
> >>
> >>
> >> Thanks heaps Andy,
> >>

> >>
> >>
> >> The KDC planner had asked us to complete a 'deemed permitted boundary
> >> activity' form and have that signed off by roading, and then they would
> >> consider that before approving. If you're happy I'll get that completed
> and
> >> through for your sign off as the 'affected party', and then back to the
> >> planners for sign off?
> >>
> >>
> >>
> >> Thank you!
> >>
> >>
> >> *Regards*
> >> *Michael Sudfelt*
> >>
> >>
> >>
> >> Franchise Owner | Sudfelt Construction Ltd -
> >> Whangarei / Kaipara Franchisee for G.J. Gardner Homes
> >> Mob: 027 527 4527 | Ph: (09) 437 5666 |
> >> Web: www.gjgardner.co.nz
> >>
> >> [image: Image removed by sender.]
> >> [image: Image
> >> removed by sender.] [image:
> >> Image removed by sender.]
> >>
> >>
> >>
> >>
> >> [image: Image removed by sender.]
> >>
> >>
> >>
> >> This email, including attachments, may contain information which is
> >> confidential or subject to legal privilege or copyright. If you are not
> the
> >> intended recipient, please notify us immediately and then please delete
> all
> >> copies of this email from your system. You must not use, disseminate,
> >> distribute or reproduce this email, any attachments, or any part
> thereof if

> >> you are not the intended recipient.
> >>
> >> Email communications are not secure and are not guaranteed by us to be
> >> free of unauthorised interference, error or virus. Anyone who
> communicates
> >> with us by email is taken to accept this risk. To the maximum extent
> >> permitted by law we are not liable for any virus or other defect in this
> >> email or in any attachment (or for any unauthorized changes made to or
> >> other interference with this email or to any attachment).
> >>
> >> Please note that this communication does not designate an information
> >> system for the purposes of the Electronic Transactions Act 2002.
> >>
> >>
> >>
> >>
> >>
> >> On Tue, May 18, 2021 at 9:04 AM Andy Brown | NTA
> >> wrote:
> >>
> >> Good morning Simon and Michael,
> >>
> >>
> >>
> >> I have no objection to the proposal as pointed out in the bullet points
> >> from Simon below it does not interfere with future use ect and would not
> >> look significantly out of place.
> >>
> >>
> >>
> >> Please note however this response does not sever as approval for your
> >> resource consent application as the proposed changes are not in line
> with
> >> the district plan requirements so this becomes a matter for the KDC
> >> resource consents team to work through with the applicant.
> >>
> >>
> >>
> >> Kind regards
> >>
> >> Andy Brown
> >>
> >>
> >>

> >> *From:* Simon Megchelse | NTA
> >> *Sent:* Tuesday, 18 May 2021 8:59 AM
> >> *To:* Andy Brown | NTA
> >> *Cc:* michael.sudfelt@gjgardner.co.nz
> >> *Subject:* FW: 8 Sampsons Way
> >>
> >>
> >>
> >> Good morning Andy
> >>
> >>
> >>
> >> As discussed yesterday please assess this request from Michael at G.J
> >> Gardener and advise KDC's/NTA's considerations as an affected party,
> >> typically RCA's can reasonably support reduced boundary set back of
> >> building from road front boundary subject to;
> >>
> >> ? Sight Lines for motorists not being compromised
> >>
> >> ? Will not impact any upgrade to roads formation
> >>
> >> ? Not a habitable room proposed to be set closer to the road
> >> boundary (i.e. garage okay)
> >>
> >>
> >>
> >> As the asset owner could you please reply back to Michael, this will
> >> allow G.J's to progress with any change to their Planning/Building
> consent
> >> application.
> >>
> >>
> >>
> >> Regards
> >>
> >>
> >>
> >> *Simon Megchelse*
> >>
> >> *Road Corridor Coordinator *
> >>
> >> *Whangarei District Council **| *Forum North | Private Bag 9023,
> >> Whangarei 0148 | www.wdc.govt.nz
> >>

> >> *P **09 430 4200* | *DDI **09 4703031* | *M** 0272703820* | *E:*
> >> *simon.megchelse@wdc.govt.nz*
> >>
> >> [image: NTA Horizontal long - full colour]
> >>
> >>
> >>
> >>
> >>
> >>
> >>
> >>
> >>
> >> *From:* Michael Sudfelt
> >> *Sent:* Monday, May 17, 2021 3:11 PM
> >> *To:* Simon Megchelse | NTA
> >> *Subject:* 8 Sampsons Way
> >>
> >>
> >>
> >> Hi Simon,
> >>
> >>
> >>
> >> As discussed this afternoon, we are having trouble complying with the
> >> Kaipara District plan. To achieve suitable on site turning for this
> modest
> >> 3 bedroom home we are finding that we are going over the allowable
> >> impervious surface restrictions.
> >>
> >>
> >>
> >> To stay within this requirement we are proposing that we bring the house
> >> forward to 4.0m off the road front boundary. Please see attached copy of
> >> proposed site plan.
> >>
> >>
> >>
> >> I've taken a screenshot from google maps which shows the 'way' which
> >> might be of some assistance.
> >>
> >>
> >>
> >> Please let me know if you have any questions. If you think this is

> >> something you would be happy to support, could you please let me know
> and I
> >> will get the form the KDC council will want completed to support our
> >> application.
> >>
> >>
> >>
> >> Thank heaps,
> >>
> >>
> >>
> >>
> >>
> >> *Regards*
> >> *Michael Sudfelt*
> >>
> >>
> >>
> >> Franchise Owner | Sudfelt Construction Ltd -
> >> Whangarei / Kaipara Franchisee for G.J. Gardner Homes
> >> Mob: 027 527 4527 | Ph: (09) 437 5666 |
> >> Web: www.gjgardner.co.nz
> >>
> >>
> >>
> >>
> >>
> >>
> >>
> >>
> >>
> >>
> >>
> >>
> >> This email, including attachments, may contain information which is
> >> confidential or subject to legal privilege or copyright. If you are not
> the
> >> intended recipient, please notify us immediately and then please delete
> all
> >> copies of this email from your system. You must not use, disseminate,
> >> distribute or reproduce this email, any attachments, or any part
> thereof if
> >> you are not the intended recipient.
> >>
> >> Email communications are not secure and are not guaranteed by us to be

> >> free of unauthorised interference, error or virus. Anyone who
> communicates
> >> with us by email is taken to accept this risk. To the maximum extent
> >> permitted by law we are not liable for any virus or other defect in this
> >> email or in any attachment (or for any unauthorized changes made to or
> >> other interference with this email or to any attachment).
> >>
> >> Please note that this communication does not designate an information
> >> system for the purposes of the Electronic Transactions Act 2002.
> >>
> >>
> >>
> >> The Northland Transportation Alliance is a partnership between all four
> >> councils within Northland and Waka Kotahi (NZTA). The information
> contained
> >> within this email may be confidential. Therefore, if you have received
> this
> >> in error, you should delete it immediately and advise the sender noting
> >> that information contained within this communication should not be used
> or
> >> transmitted in any format.
> >>
> >> The Northland Transportation Alliance is a partnership between all four
> >> councils within Northland and Waka Kotahi (NZTA). The information
> contained
> >> within this email may be confidential. Therefore, if you have received
> this
> >> in error, you should delete it immediately and advise the sender noting
> >> that information contained within this communication should not be used
> or
> >> transmitted in any format.
> >>
> >> The Northland Transportation Alliance is a partnership between all four
> >> councils within Northland and Waka Kotahi (NZTA). The information
> contained
> >> within this email may be confidential. Therefore, if you have received
> this
> >> in error, you should delete it immediately and advise the sender noting
> >> that information contained within this communication should not be used
> or
> >> transmitted in any format.
> >>
> >
>

>
> ----------
>
> REJECTED ATTACHMENT(S):
> Note: The listed file(s) below were rejected because they were not in PDF
> format.
> - image001.jpg
> - image002.jpg
> - image003.jpg
> - image004.jpg
> - image005.png
> - image006.png
> - image007.png
> - image008.jpg
> - image009.jpg
> - image010.jpg
>
> ----------
>
> ----------
> *DISCLAIMER*
> This message is for the designated recipient(s) only, and may contain
> confidential and/or privileged information. If you have received it in
> error, please delete it and advise the sender immediately. You should not
> copy or use it for any other purpose, nor disclose its contents to any
> other person.
>
> Designated Recipient(s): ean.dawson@gjgardner.co.nz, rachyledge@gmail.com
> Sent From: AlphaOne Building Consent System
> Sent Date: 15 June 2021 08:46:47 am - Tuesday

Email #49417: BC210208

Project ID: 210208
Date Received: 2021-06-15 10:10:07
Sender: ean.dawson@gjgardner.co.nz
Checked By: Sharon Campbell
Accepted By: Kelsey Newman
Subject:
Information Received Via Email: Re: BC210208: 8 Sampsons Way Dargaville
Message:
Tena koe Kelsey,

Thank you for receiving my call today. Please find attached the site plan and modifications to Gobi blocks to suit an 8.0m turning circle.

As discussed the district plan rules seem very unreasonable with the size of lots we are working with, so a change to this rule would benefit everyone going forward.

*Ng**? mihi nui,*
Ean Dawson

Contracts Manager | Sudfelt Construction Ltd -
Whangarei / Kaipara Franchisee for G.J. Gardner Homes
Ph: (09) 437 5666 <+6494375666> | Web: www.gjgardner.co.nz

[image: http://www.gjgardner.co.nz/assets/Uploads/Facebook.jpg] <https://www.facebook.com/GJGardnerHomesNewZealand> [image: http://www.gjgardner.co.nz/assets/Uploads/Pinterest.jpg] <http://www.pinterest.com/GJGardnerNZ/> [image: https://www.gjgardner.co.nz/assets/Uploads/Insta8.jpg] <https://www.instagram.com/gjgardnerhomesnz/?hl>

[image: http://www.gjgardner.co.nz/assets/Uploads/GJGardner.jpg] <http://www.gjgardner.co.nz/>

This email, including attachments, may contain information which is confidential or subject to legal privilege or copyright. If you are not the intended recipient, please notify us immediately and then please delete all copies of this email from your system. You must not use, disseminate, distribute or reproduce this email, any attachments, or any part thereof if you are not the intended recipient.

Email communications are not secure and are not guaranteed by us to be free of unauthorised interference, error or virus. Anyone who communicates with us by email is taken to accept this risk. To the maximum extent permitted by law we are not liable for any virus or other defect in this email or in any attachment (or for any unauthorized changes made to or other interference with this email or to any attachment).

Please note that this communication does not designate an information system for the purposes of the Electronic Transactions Act 2002.

On Tue, 15 Jun 2021 at 09:36, Kaipara District Council <
210208@kdc.abcs.co.nz> wrote:

>
> Morena,
>
> Thank you for your quick response.
>
> I view this turning circle as a breach. To confirm compliance with the KDC
> Appendix 25C, please provide a clear drawing showing the 8m radius and
> maneuvering tracking curves.
>
> Kelsey Newman
> Planning Team
> Kaipara District Council
> Unit 6 - The Hub, 6 Molesworth Drive, Mangawhai 0505
> P: (09) 439 3123 | E: buildingsupport@kaipara.govt.nz | W:
> www.kaipara.govt.nz
>
>
>
>
> ==>
> Morena Kelsey,
>
> I had indicated the turning circles of both vehicles on the drawings that
> work within the driveway and Gobi blocks, The vehicles tracking is as per
> AS/NZS 2890.1:2004 (Off Street Car Parking) - B99 Vehicle (Realistic min
> radius) (2004) without any allowances for lock to lock time (i.e. vehicles
> are turning lock to lock while stationary).
>
> So I believe that this should suffice planning requirements?
>

> *Ng**? mihi nui,*
> *Ean Dawson*
>
> Contracts Manager | Sudfelt Construction Ltd -
> Whangarei / Kaipara Franchisee for G.J. Gardner Homes
> Ph: (09) 437 5666 | Web: www.gjgardner.co.nz
>
> [image: http://www.gjgardner.co.nz/assets/Uploads/Facebook.jpg]
> [image:
> http://www.gjgardner.co.nz/assets/Uploads/Pinterest.jpg]
> [image:
> https://www.gjgardner.co.nz/assets/Uploads/Insta8.jpg]
>
>
> [image: http://www.gjgardner.co.nz/assets/Uploads/GJGardner.jpg]
>
>
> This email, including attachments, may contain information which is
> confidential or subject to legal privilege or copyright. If you are not the
> intended recipient, please notify us immediately and then please delete all
> copies of this email from your system. You must not use, disseminate,
> distribute or reproduce this email, any attachments, or any part thereof if
> you are not the intended recipient.
>
> Email communications are not secure and are not guaranteed by us to be free
> of unauthorised interference, error or virus. Anyone who communicates with
> us by email is taken to accept this risk. To the maximum extent permitted
> by law we are not liable for any virus or other defect in this email or in
> any attachment (or for any unauthorized changes made to or other
> interference with this email or to any attachment).
>
> Please note that this communication does not designate an information
> system for the purposes of the Electronic Transactions Act 2002.
>
> On Tue, 15 Jun 2021 at 08:46, Kaipara District Council
> wrote:
>
> > Morena,
> >
> > Thank you for the updated site plan. From looking at the plan the use of
> > impermeable 'Gobi Blocks' as a border of the driveway allows compliance
> > with the impermeable surface Rule within the District Plan. The only
> > remaining breaches are 13.10.25 and 13.10.27 due to the turning circle.
> >

> >
> > Kelsey Newman
> > Planning Team
> > Kaipara District Council
> > Unit 6 - The Hub, 6 Molesworth Drive, Mangawhai 0505
> > P: (09) 439 3123 | E: buildingsupport@kaipara.govt.nz | W:
> > www.kaipara.govt.nz
> >
> >
> >
> >
> > ==========> >
> > Tena koe,
> >
> > Please find following email I sent to the Planning department of KDC for
> > your information.
> >
> > *Ng**? mihi nui,*
> > *Ean Dawson*
> >
> > Contracts Manager | Sudfelt Construction Ltd -
> > Whangarei / Kaipara Franchisee for G.J. Gardner Homes
> > Ph: (09) 437 5666 | Web: www.gjgardner.co.nz
> >
> > [image: http://www.gjgardner.co.nz/assets/Uploads/Facebook.jpg]
> > [image:
> > http://www.gjgardner.co.nz/assets/Uploads/Pinterest.jpg]
> > [image:
> > https://www.gjgardner.co.nz/assets/Uploads/Insta8.jpg]
> >
> >
> > [image: http://www.gjgardner.co.nz/assets/Uploads/GJGardner.jpg]
> >
> >
> > This email, including attachments, may contain information which is
> > confidential or subject to legal privilege or copyright. If you are not
> the
> > intended recipient, please notify us immediately and then please delete
> all
> > copies of this email from your system. You must not use, disseminate,
> > distribute or reproduce this email, any attachments, or any part thereof
> if
> > you are not the intended recipient.
> >

> > Email communications are not secure and are not guaranteed by us to be
> free
> > of unauthorised interference, error or virus. Anyone who communicates
> with
> > us by email is taken to accept this risk. To the maximum extent permitted
> > by law we are not liable for any virus or other defect in this email or
> in
> > any attachment (or for any unauthorized changes made to or other
> > interference with this email or to any attachment).
> >
> > Please note that this communication does not designate an information
> > system for the purposes of the Electronic Transactions Act 2002.
> >
> > ---------- Forwarded message ---------
> > From: Ean Dawson
> > Date: Mon, 14 Jun 2021 at 11:01
> > Subject: Re: FW: 8 Sampsons Way
> > To: Kelsey Newman ,
> > Cc: Julieanne.Mollet@gjgardner.co.nz ,
> > Michael Sudfelt
> >
> > Kia ora Kelsey and Wendy,
> >
> > Please find attached site plan with turning circles and maneuverability
> for
> > the two x vehicles as well as the framed Gobi Block's around the
> driveway.
> >
> > Please advise if this satisfies the requirement for *not *applying for
> RC.
> >
> > *Ng**? mihi nui,*
> > *Ean Dawson*
> >
> > Contracts Manager | Sudfelt Construction Ltd -
> > Whangarei / Kaipara Franchisee for G.J. Gardner Homes
> > Ph: (09) 437 5666 | Web: www.gjgardner.co.nz
> >
> > [image: http://www.gjgardner.co.nz/assets/Uploads/Facebook.jpg]
> > [image:
> > http://www.gjgardner.co.nz/assets/Uploads/Pinterest.jpg]
> > [image:
> > https://www.gjgardner.co.nz/assets/Uploads/Insta8.jpg]
> >

> >
> > [image: http://www.gjgardner.co.nz/assets/Uploads/GJGardner.jpg]
> >
> >
> > This email, including attachments, may contain information which is
> > confidential or subject to legal privilege or copyright. If you are not
> the
> > intended recipient, please notify us immediately and then please delete
> all
> > copies of this email from your system. You must not use, disseminate,
> > distribute or reproduce this email, any attachments, or any part thereof
> if
> > you are not the intended recipient.
> >
> > Email communications are not secure and are not guaranteed by us to be
> free
> > of unauthorised interference, error or virus. Anyone who communicates
> with
> > us by email is taken to accept this risk. To the maximum extent permitted
> > by law we are not liable for any virus or other defect in this email or
> in
> > any attachment (or for any unauthorized changes made to or other
> > interference with this email or to any attachment).
> >
> > Please note that this communication does not designate an information
> > system for the purposes of the Electronic Transactions Act 2002.
> >
> > On Fri, 11 Jun 2021 at 14:09, Michael Sudfelt
> > wrote:
> >
> > > Thanks Kelsey,
> > >
> > > *Regards*
> > > *Michael Sudfelt*
> > >
> > >
> > >
> > > Franchise Owner | Sudfelt Construction Ltd -
> > > Whangarei / Kaipara Franchisee for G.J. Gardner Homes
> > > Mob: 027 527 4527 | Ph: (09) 437 5666 |
> > > Web: www.gjgardner.co.nz
> > >
> > > [image: http://www.gjgardner.co.nz/assets/Uploads/Facebook.jpg]
> > > [image:

> > > http://www.gjgardner.co.nz/assets/Uploads/Pinterest.jpg]
> > > [image:
> > > https://www.gjgardner.co.nz/assets/Uploads/Insta8.jpg]
> > >
> > >
> > >
> > >
> > > [image: http://www.gjgardner.co.nz/assets/Uploads/GJGardner.jpg]
> > >
> > >
> > >
> > >
> > > This email, including attachments, may contain information which is
> > > confidential or subject to legal privilege or copyright. If you are not
> > the
> > > intended recipient, please notify us immediately and then please delete
> > all
> > > copies of this email from your system. You must not use, disseminate,
> > > distribute or reproduce this email, any attachments, or any part
> thereof
> > if
> > > you are not the intended recipient.
> > >
> > > Email communications are not secure and are not guaranteed by us to be
> > > free of unauthorised interference, error or virus. Anyone who
> > communicates
> > > with us by email is taken to accept this risk. To the maximum extent
> > > permitted by law we are not liable for any virus or other defect in
> this
> > > email or in any attachment (or for any unauthorized changes made to or
> > > other interference with this email or to any attachment).
> > >
> > > Please note that this communication does not designate an information
> > > system for the purposes of the Electronic Transactions Act 2002.
> > >
> > >
> > > On Thu, Jun 10, 2021 at 10:51 AM Kelsey Newman
> > > wrote:
> > >
> > >> Hello there,
> > >>
> > >>
> > >>
> > >> Apologies regarding the miss information I provided, Wendy and I had a

> > >> chat to clarify this.
> > >>
> > >>
> > >>
> > >> The plan that you have proposed that shows a 0.5m front setback breach
> > >> has been looked at and the manoeuvring area is in compliance.
> > >>
> > >>
> > >>
> > >> In regards to the gobi blocks or the materials excluded from the
> > >> impermeable surface materials, showing these on the site plan would be
> > >> helpful. Council can allow permeable pavers to be used such as gobi
> > >> blocks. Within KDC District Plan Appendix 25A, which states in Section
> > 6.1:
> > >>
> > >>
> > >>
> > >> - *"Permeable surfaces such as gravel, gobi-blocks or other permeable
> > >> paving systems can be used on driveways, parking places and pathways
> to
> > >> allow storm water to percolate directly into the underlying
> sub-soil". *
> > >>
> > >>
> > >>
> > >> Regarding the Deemed Permitted Marginal Activity, I double checked
> with
> > >> Wendy and unfortunately council does not process Deemed Permitted
> > Marginal
> > >> Activities for Manoeuvring Beaches as it is an access issue.
> > >>
> > >>
> > >>
> > >> I hope this answers your questions and thank you for your patience.
> > >>
> > >>
> > >>
> > >> Ng? mihi nui,
> > >>
> > >>
> > >>
> > >> Kelsey
> > >>
> > >>

> > >>
> > >>
> > >>
> > >> [image: KDC Logo test June 2015]
> > >>
> > >> Kelsey Newman | Graduate Planner
> > >>
> > >> Kaipara District Council, Private Bag 1001, Dargaville 0340
> > >>
> > >> Freephone: 0800 727 059 | DDI: 09 439 3123 | Cell: 021 391 351
> > >>
> > >> knewman@kaipara.govt.nz | council@kaipara.govt.nz |
> www.kaipara.govt.nz
> > >>
> > >>
> > >>
> > >> *Please be advised that any statements made by the Council's Resource
> > >> Consent Helpdesk team are for the purposes of providing general
> guidance
> > >> only, and are not to be relied upon as advice for the purposes of
> > assessing
> > >> particular proposals. Recipients are advised that they need to seek
> > their
> > >> own independent professional advice and make their own enquiries.
> > >> Furthermore, any general guidance given by the Council's Resource
> > Consent
> > >> Helpdesk team does not have any bearing on the position that the
> Council
> > >> may take in its regulatory capacity.*
> > >>
> > >>
> > >>
> > >> *The Council makes no warranty, express or implied, nor assumes any
> > legal
> > >> liability or responsibility for the accuracy, correctness,
> completeness
> > or
> > >> use of any information or views communicated as part of the Resource
> > >> Consent Helpdesk service. To the extent permissible by law, the
> Council
> > >> expressly disclaims any liability to the applicant (under any theory
> of
> > law
> > >> including negligence) in relation to any duty.*

> > >>
> > >>
> > >>
> > >>
> > >>
> > >>
> > >>
> > >>
> > >>
> > >> *From:* Wendy Robinson
> > >> *Sent:* Wednesday, 2 June 2021 2:23 pm
> > >> *To:* Kelsey Newman
> > >> *Subject:* FW: FW: 8 Sampsons Way
> > >>
> > >>
> > >>
> > >> Hi Kelsey,
> > >>
> > >>
> > >>
> > >> Any chance you could check this one again before he lodges?
> > >>
> > >>
> > >>
> > >> Ng? mihi,
> > >>
> > >> Wendy
> > >>
> > >>
> > >>
> > >> *From:* Michael Sudfelt
> > >> *Sent:* Wednesday, 2 June 2021 12:50 PM
> > >> *To:* Wendy Robinson
> > >> *Cc:* Ean Dawson ; Julieanne Mollet
> > >>
> > >> *Subject:* Fwd: FW: 8 Sampsons Way
> > >>
> > >>
> > >>
> > >> CAUTION: This email originated from outside Kaipara District Council.
> Do
> > >> not click links or open attachments unless you recognise the sender
> and
> > >> know the content is safe.

> > >>
> > >>
> > >>
> > >> Hi Wendy,
> > >>
> > >>
> > >>
> > >> Thanks for your chat just now.
> > >>
> > >>
> > >>
> > >> To offer further clarity I've attached the plans, PIM & form 4 which
> > this
> > >> all relates to.
> > >>
> > >>
> > >>
> > >> I also attach the plan we are proposing that shows a 0.5m front
> setback
> > >> breach which we believe enables for the onsite turning to work, while
> > >> remaining inside the impervious surfaces limits.
> > >>
> > >>
> > >>
> > >> Before we go down this track any further do you think you could have
> > >> someone check this to make sure we all agree the only breach with this
> > >> proposal is the front setback? I'd hate to carry on and then find
> > someone
> > >> doesn't agree with our on site turning working..
> > >>
> > >>
> > >>
> > >> Also with regards to 'gobi blocks' or something to that effect, are
> you
> > >> able to confirm that if we were to show these on the site plan as part
> > of
> > >> the driveway, will they count against our impervious surface area?
> > >>
> > >>
> > >>
> > >> And one last thought, given that the on site turning is soooo very
> close
> > >> to complying with the district plan, could we leave as is and apply
> for

> > >> "Deemed Permitted Marginal Activity"? From having a read through the
> > >> attached guidance I would consider that the breach is marginal, and
> that
> > >> any potential effects on any person would be 'less than minor'..
> > >>
> > >>
> > >>
> > >> Thanks heaps for your attention on this one.
> > >>
> > >>
> > >>
> > >> Kind regards,
> > >>
> > >>
> > >> *Regards*
> > >> *Michael Sudfelt*
> > >>
> > >>
> > >>
> > >> Franchise Owner | Sudfelt Construction Ltd -
> > >> Whangarei / Kaipara Franchisee for G.J. Gardner Homes
> > >> Mob: 027 527 4527 | Ph: (09) 437 5666 |
> > >> Web: www.gjgardner.co.nz
> > >>
> > >>
> > >>
> > >>
> > >>
> > >>
> > >>
> > >>
> > >>
> > >>
> > >>
> > >>
> > >>
> > >>
> > >>
> > >> This email, including attachments, may contain information which is
> > >> confidential or subject to legal privilege or copyright. If you are
> not
> > > the
> > >> intended recipient, please notify us immediately and then please
> delete
> > all
> > >> copies of this email from your system. You must not use, disseminate,
> > >> distribute or reproduce this email, any attachments, or any part
> > thereof if

> > >> you are not the intended recipient.
> > >>
> > >> Email communications are not secure and are not guaranteed by us to be
> > >> free of unauthorised interference, error or virus. Anyone who
> > communicates
> > >> with us by email is taken to accept this risk. To the maximum extent
> > >> permitted by law we are not liable for any virus or other defect in
> this
> > >> email or in any attachment (or for any unauthorized changes made to or
> > >> other interference with this email or to any attachment).
> > >>
> > >> Please note that this communication does not designate an information
> > >> system for the purposes of the Electronic Transactions Act 2002.
> > >>
> > >>
> > >>
> > >> ---------- Forwarded message ---------
> > >> From: *Julieanne Mollet*
> > >> Date: Mon, May 31, 2021 at 4:27 PM
> > >> Subject: Fwd: FW: 8 Sampsons Way
> > >> To: Michael Sudfelt
> > >>
> > >>
> > >>
> > >>
> > >> *Regards*
> > >> *Julieanne Mollet*
> > >>
> > >>
> > >>
> > >> Administrator | Sudfelt Construction Ltd -
> > >> Whangarei / Kaipara Franchisee for G.J. Gardner Homes
> > >> Ph: (09) 437 5666 | Web: www.gjgardner.co.nz
> > >>
> > >>
> > >>
> > >>
> > >>
> > >>
> > >>
> > >>
> > >>
> > >>
> > >>
> > >>

> > >> This email, including attachments, may contain information which is
> > >> confidential or subject to legal privilege or copyright. If you are
> not
> > the
> > >> intended recipient, please notify us immediately and then please
> delete
> > all
> > >> copies of this email from your system. You must not use, disseminate,
> > >> distribute or reproduce this email, any attachments, or any part
> > thereof if
> > >> you are not the intended recipient.
> > >>
> > >> Email communications are not secure and are not guaranteed by us to be
> > >> free of unauthorised interference, error or virus. Anyone who
> > communicates
> > >> with us by email is taken to accept this risk. To the maximum extent
> > >> permitted by law we are not liable for any virus or other defect in
> this
> > >> email or in any attachment (or for any unauthorized changes made to or
> > >> other interference with this email or to any attachment).
> > >>
> > >> Please note that this communication does not designate an information
> > >> system for the purposes of the Electronic Transactions Act 2002
> > >>
> > >>
> > >>
> > >> ---------- Forwarded message ---------
> > >> From: *Andy Brown | NTA*
> > >> Date: Mon, 31 May 2021 at 15:12
> > >> Subject: FW: 8 Sampsons Way
> > >> To: Julieanne Mollet
> > >> Cc: Wendy Robinson
> > >>
> > >>
> > >>
> > >> Hi Julieanne,
> > >>
> > >>
> > >>
> > >> Apologies for not getting back to you but I was concerned we had the
> > >> wrong information on this. Below is confirmation that I was correct
> and
> > >> the Resource Consents manager is happy to Discuss as per below.
> > >>

> > >>
> > >>
> > >>
> > >>
> > >> Kind regards
> > >>
> > >> Andy
> > >>
> > >>
> > >>
> > >> *From:* Wendy Robinson
> > >> *Sent:* Monday, 31 May 2021 3:02 PM
> > >> *To:* Andy Brown | NTA
> > >> *Subject:* RE: 8 Sampsons Way
> > >>
> > >>
> > >>
> > >> Hi Andy,
> > >>
> > >>
> > >>
> > >> Definitely not sure what is happening on this one. Deemed Permitted
> > >> Boundary Activities only relate to side and rear setbacks, not front
> > >> setbacks. Feel free to have them call me directly.
> > >>
> > >>
> > >>
> > >> Ng? mihi,
> > >>
> > >> Wendy
> > >>
> > >>
> > >>
> > >> [image: KDC Logo test June 2015]
> > >>
> > >> Wendy Robinson | Resource Consents Manager
> > >>
> > >> Mangawhai Office: Unit 6, The Hub, 6 Molesworth Drive, Mangawhai 0505
> > >>
> > >> Kaipara District Council, Private Bag 1001, Dargaville 0340
> > >>
> > >> Freephone: 0800 727 059 | Phone: 021 579 937
> > >>
> > >> *wrobinson*@kaipara.govt.nz | council@kaipara.govt.nz |

> > >> www.kaipara.govt.nz
> > >>
> > >>
> > >>
> > >>
> > >>
> > >>
> > >>
> > >> *From:* Andy Brown | NTA
> > >> *Sent:* Monday, 31 May 2021 12:43 PM
> > >> *To:* Wendy Robinson
> > >> *Subject:* FW: 8 Sampsons Way
> > >>
> > >>
> > >>
> > >> CAUTION: This email originated from outside Kaipara District Council.
> Do
> > >> not click links or open attachments unless you recognise the sender
> and
> > >> know the content is safe.
> > >>
> > >>
> > >>
> > >> FYI for discussion if needed
> > >>
> > >>
> > >>
> > >> *From:* Andy Brown | NTA
> > >> *Sent:* Wednesday, 26 May 2021 10:05 AM
> > >> *To:* Julieanne Mollet ; Simon
> > >> Megchelse | NTA ; Michael Sudfelt
> > > michael.sudfelt@gjgardner.co.nz>
> > >> *Subject:* RE: 8 Sampsons Way
> > >>
> > >>
> > >>
> > >> Hi Julieanne
> > >>
> > >>
> > >>
> > >> Could you please provide back a form that has no detail in the
> affected
> > >> parties section so I can complete in full? I am not in the office
> today

> > >> but can print, fill in & sign and return tomorrow when I am back in
> the
> > >> office.
> > >>
> > >>
> > >>
> > >>
> > >>
> > >> Regards
> > >>
> > >> Andy
> > >>
> > >>
> > >>
> > >>
> > >>
> > >> *From:* Julieanne Mollet
> > >> *Sent:* Wednesday, 26 May 2021 9:23 AM
> > >> *To:* Simon Megchelse | NTA ; Andy Brown |
> > >> NTA ; Michael Sudfelt
> > > michael.sudfelt@gjgardner.co.nz>
> > >> *Subject:* Fwd: 8 Sampsons Way
> > >>
> > >>
> > >>
> > >> Hi Andy and Simon
> > >>
> > >>
> > >>
> > >> Just following up on the below email. We are keen to get this
> submitted
> > >> to Council as soon as possible for our client. Would you be able to
> let
> > us
> > >> know when we can expect this back? Or did you have any queries on the
> > >> details we had sent through?
> > >>
> > >>
> > >> *Regards*
> > >> *Julieanne Mollet*
> > >>
> > >>
> > >>
> > >> Administrator | Sudfelt Construction Ltd -

> > >> Whangarei / Kaipara Franchisee for G.J. Gardner Homes
> > >> Ph: (09) 437 5666 | Web: www.gjgardner.co.nz
> > >>
> > >> [image: Image removed by sender.]
> > >> [image: Image
> > >> removed by sender.] [image:
> > >> Image removed by sender.]
> > >>
> > >>
> > >>
> > >>
> > >> [image: Image removed by sender.]
> > >>
> > >>
> > >>
> > >> This email, including attachments, may contain information which is
> > >> confidential or subject to legal privilege or copyright. If you are
> not
> > the
> > >> intended recipient, please notify us immediately and then please
> delete
> > all
> > >> copies of this email from your system. You must not use, disseminate,
> > >> distribute or reproduce this email, any attachments, or any part
> > thereof if
> > >> you are not the intended recipient.
> > >>
> > >> Email communications are not secure and are not guaranteed by us to be
> > >> free of unauthorised interference, error or virus. Anyone who
> > communicates
> > >> with us by email is taken to accept this risk. To the maximum extent
> > >> permitted by law we are not liable for any virus or other defect in
> this
> > >> email or in any attachment (or for any unauthorized changes made to or
> > >> other interference with this email or to any attachment).
> > >>
> > >> Please note that this communication does not designate an information
> > >> system for the purposes of the Electronic Transactions Act 2002
> > >>
> > >>
> > >>
> > >> ---------- Forwarded message ---------
> > >> From: *Julieanne Mollet*
> > >> Date: Thu, 20 May 2021 at 09:17

> > >> Subject: Fwd: 8 Sampsons Way
> > >> To: ,
> > >> Cc: Michael Sudfelt
> > >>
> > >>
> > >>
> > >> Hi Andy and Simon
> > >>
> > >>
> > >>
> > >> Further to the below email correspondence with Michael, please see
> > >> attached the Affected Party Deemed Permitted Boundary Activity form
> and
> > >> plan for signoff. If you can please sign and return both for us, that
> > >> would be great.
> > >>
> > >>
> > >> *Regards*
> > >> *Julieanne Mollet*
> > >>
> > >>
> > >>
> > >> Administrator | Sudfelt Construction Ltd -
> > >> Whangarei / Kaipara Franchisee for G.J. Gardner Homes
> > >> Ph: (09) 437 5666 | Web: www.gjgardner.co.nz
> > >>
> > >> [image: Image removed by sender.]
> > >> [image: Image
> > >> removed by sender.] [image:
> > >> Image removed by sender.]
> > >>
> > >>
> > >>
> > >>
> > >>
> > >> [image: Image removed by sender.]
> > >>
> > >>
> > >>
> > >> This email, including attachments, may contain information which is
> > >> confidential or subject to legal privilege or copyright. If you are
> not
> > the
> > >> intended recipient, please notify us immediately and then please
> delete

> > all
> > >> copies of this email from your system. You must not use, disseminate,
> > >> distribute or reproduce this email, any attachments, or any part
> > thereof if
> > >> you are not the intended recipient.
> > >>
> > >> Email communications are not secure and are not guaranteed by us to be
> > >> free of unauthorised interference, error or virus. Anyone who
> > communicates
> > >> with us by email is taken to accept this risk. To the maximum extent
> > >> permitted by law we are not liable for any virus or other defect in
> this
> > >> email or in any attachment (or for any unauthorized changes made to or
> > >> other interference with this email or to any attachment).
> > >>
> > >> Please note that this communication does not designate an information
> > >> system for the purposes of the Electronic Transactions Act 2002
> > >>
> > >>
> > >>
> > >> ---------- Forwarded message ---------
> > >>
> > >> From: *Michael Sudfelt*
> > >> Date: Tue, May 18, 2021 at 9:10 AM
> > >> Subject: Re: 8 Sampsons Way
> > >> To: Andy Brown | NTA
> > >> Cc: Simon Megchelse | NTA
> > >>
> > >>
> > >>
> > >> Thanks heaps Andy,
> > >>
> > >>
> > >>
> > >> The KDC planner had asked us to complete a 'deemed permitted boundary
> > >> activity' form and have that signed off by roading, and then they
> would
> > >> consider that before approving. If you're happy I'll get that
> completed
> > and
> > >> through for your sign off as the 'affected party', and then back to
> the
> > >> planners for sign off?
> > >>

> > >>
> > >>
> > >> Thank you!
> > >>
> > >>
> > >> *Regards*
> > >> *Michael Sudfelt*
> > >>
> > >>
> > >>
> > >> Franchise Owner | Sudfelt Construction Ltd -
> > >> Whangarei / Kaipara Franchisee for G.J. Gardner Homes
> > >> Mob: 027 527 4527 | Ph: (09) 437 5666 |
> > >> Web: www.gjgardner.co.nz
> > >>
> > >> [image: Image removed by sender.]
> > >> [image: Image
> > >> removed by sender.] [image:
> > >> Image removed by sender.]
> > >>
> > >>
> > >>
> > >>
> > >> [image: Image removed by sender.]
> > >>
> > >>
> > >>
> > >> This email, including attachments, may contain information which is
> > >> confidential or subject to legal privilege or copyright. If you are
> not
> > the
> > >> intended recipient, please notify us immediately and then please
> delete
> > all
> > >> copies of this email from your system. You must not use, disseminate,
> > >> distribute or reproduce this email, any attachments, or any part
> > thereof if
> > >> you are not the intended recipient.
> > >>
> > >> Email communications are not secure and are not guaranteed by us to be
> > >> free of unauthorised interference, error or virus. Anyone who
> > communicates
> > >> with us by email is taken to accept this risk. To the maximum extent
> > >> permitted by law we are not liable for any virus or other defect in

> this
> > >> email or in any attachment (or for any unauthorized changes made to or
> > >> other interference with this email or to any attachment).
> > >>
> > >> Please note that this communication does not designate an information
> > >> system for the purposes of the Electronic Transactions Act 2002.
> > >>
> > >>
> > >>
> > >>
> > >>
> > >> On Tue, May 18, 2021 at 9:04 AM Andy Brown | NTA
> > >> wrote:
> > >>
> > >> Good morning Simon and Michael,
> > >>
> > >>
> > >>
> > >> I have no objection to the proposal as pointed out in the bullet
> points
> > >> from Simon below it does not interfere with future use ect and would
> not
> > >> look significantly out of place.
> > >>
> > >>
> > >>
> > >> Please note however this response does not sever as approval for your
> > >> resource consent application as the proposed changes are not in line
> > with
> > >> the district plan requirements so this becomes a matter for the KDC
> > >> resource consents team to work through with the applicant.
> > >>
> > >>
> > >>
> > >> Kind regards
> > >>
> > >> Andy Brown
> > >>
> > >>
> > >>
> > >> *From:* Simon Megchelse | NTA
> > >> *Sent:* Tuesday, 18 May 2021 8:59 AM
> > >> *To:* Andy Brown | NTA
> > >> *Cc:* michael.sudfelt@gjgardner.co.nz

> > >> *Subject:* FW: 8 Sampsons Way
> > >>
> > >>
> > >>
> > >> Good morning Andy
> > >>
> > >>
> > >>
> > >> As discussed yesterday please assess this request from Michael at G.J
> > >> Gardener and advise KDC's/NTA's considerations as an affected party,
> > >> typically RCA's can reasonably support reduced boundary set back of
> > >> building from road front boundary subject to;
> > >>
> > >> ? Sight Lines for motorists not being compromised
> > >>
> > >> ? Will not impact any upgrade to roads formation
> > >>
> > >> ? Not a habitable room proposed to be set closer to the road
> > >> boundary (i.e. garage okay)
> > >>
> > >>
> > >>
> > >> As the asset owner could you please reply back to Michael, this will
> > >> allow G.J's to progress with any change to their Planning/Building
> > consent
> > >> application.
> > >>
> > >>
> > >>
> > >> Regards
> > >>
> > >>
> > >>
> > >> *Simon Megchelse*
> > >>
> > >> *Road Corridor Coordinator *
> > >>
> > >> *Whangarei District Council **| *Forum North | Private Bag 9023,
> > >> Whangarei 0148 | www.wdc.govt.nz
> > >>
> > >> *P **09 430 4200* | *DDI **09 4703031* | *M** 0272703820* | *E:*
> > >> *simon.megchelse@wdc.govt.nz*
> > >>
> > >> [image: NTA Horizontal long - full colour]

> > >>
> > >>
> > >>
> > >>
> > >>
> > >>
> > >>
> > >>
> > >>
> > >> *From:* Michael Sudfelt
> > >> *Sent:* Monday, May 17, 2021 3:11 PM
> > >> *To:* Simon Megchelse | NTA
> > >> *Subject:* 8 Sampsons Way
> > >>
> > >>
> > >>
> > >> Hi Simon,
> > >>
> > >>
> > >>
> > >> As discussed this afternoon, we are having trouble complying with the
> > >> Kaipara District plan. To achieve suitable on site turning for this
> > modest
> > >> 3 bedroom home we are finding that we are going over the allowable
> > >> impervious surface restrictions.
> > >>
> > >>
> > >>
> > >> To stay within this requirement we are proposing that we bring the
> house
> > >> forward to 4.0m off the road front boundary. Please see attached copy
> of
> > >> proposed site plan.
> > >>
> > >>
> > >>
> > >> I've taken a screenshot from google maps which shows the 'way' which
> > >> might be of some assistance.
> > >>
> > >>
> > >>
> > >> Please let me know if you have any questions. If you think this is
> > >> something you would be happy to support, could you please let me know
> > and I

> > >> will get the form the KDC council will want completed to support our
> > >> application.
> > >>
> > >>
> > >>
> > >> Thank heaps,
> > >>
> > >>
> > >>
> > >>
> > >>
> > >>
> > >> *Regards*
> > >> *Michael Sudfelt*
> > >>
> > >>
> > >>
> > >> Franchise Owner | Sudfelt Construction Ltd -
> > >> Whangarei / Kaipara Franchisee for G.J. Gardner Homes
> > >> Mob: 027 527 4527 | Ph: (09) 437 5666 |
> > >> Web: www.gjgardner.co.nz
> > >>
> > >>
> > >>
> > >>
> > >>
> > >>
> > >>
> > >>
> > >>
> > >>
> > >>
> > >>
> > >> This email, including attachments, may contain information which is
> > >> confidential or subject to legal privilege or copyright. If you are
> not
> > the
> > >> intended recipient, please notify us immediately and then please
> delete
> > all
> > >> copies of this email from your system. You must not use, disseminate,
> > >> distribute or reproduce this email, any attachments, or any part
> > thereof if
> > >> you are not the intended recipient.
> > >>
> > >> Email communications are not secure and are not guaranteed by us to be

> > >> free of unauthorised interference, error or virus. Anyone who
> > communicates
> > >> with us by email is taken to accept this risk. To the maximum extent
> > >> permitted by law we are not liable for any virus or other defect in
> this
> > >> email or in any attachment (or for any unauthorized changes made to or
> > >> other interference with this email or to any attachment).
> > >>
> > >> Please note that this communication does not designate an information
> > >> system for the purposes of the Electronic Transactions Act 2002.
> > >>
> > >>
> > >>
> > >> The Northland Transportation Alliance is a partnership between all
> four
> > >> councils within Northland and Waka Kotahi (NZTA). The information
> > contained
> > >> within this email may be confidential. Therefore, if you have received
> > this
> > >> in error, you should delete it immediately and advise the sender
> noting
> > >> that information contained within this communication should not be
> used
> > or
> > >> transmitted in any format.
> > >>
> > >> The Northland Transportation Alliance is a partnership between all
> four
> > >> councils within Northland and Waka Kotahi (NZTA). The information
> > contained
> > >> within this email may be confidential. Therefore, if you have received
> > this
> > >> in error, you should delete it immediately and advise the sender
> noting
> > >> that information contained within this communication should not be
> used
> > or
> > >> transmitted in any format.
> > >>
> > >> The Northland Transportation Alliance is a partnership between all
> four
> > >> councils within Northland and Waka Kotahi (NZTA). The information
> > contained
> > >> within this email may be confidential. Therefore, if you have received

> > this
> > >> in error, you should delete it immediately and advise the sender
> noting
> > >> that information contained within this communication should not be
> used
> > or
> > >> transmitted in any format.
> > >>
> > >
> >
> >
> > ----------
> >
> > REJECTED ATTACHMENT(S):
> > Note: The listed file(s) below were rejected because they were not in PDF
> > format.
> > - image001.jpg
> > - image002.jpg
> > - image003.jpg
> > - image004.jpg
> > - image005.png
> > - image006.png
> > - image007.png
> > - image008.jpg
> > - image009.jpg
> > - image010.jpg
> >
> > ------------------------------
> >
> > ------------------------------
> > *DISCLAIMER*
> > This message is for the designated recipient(s) only, and may contain
> > confidential and/or privileged information. If you have received it in
> > error, please delete it and advise the sender immediately. You should not
> > copy or use it for any other purpose, nor disclose its contents to any
> > other person.
> >
> > Designated Recipient(s): ean.dawson@gjgardner.co.nz,
> rachyledge@gmail.com
> > Sent From: AlphaOne Building Consent System
> > Sent Date: 15 June 2021 08:46:47 am - Tuesday
>
> ------------------------------
>

> ------------------------------
> *DISCLAIMER*
> This message is for the designated recipient(s) only, and may contain
> confidential and/or privileged information. If you have received it in
> error, please delete it and advise the sender immediately. You should not
> copy or use it for any other purpose, nor disclose its contents to any
> other person.
>
> Designated Recipient(s): ean.dawson@gjgardner.co.nz
> Sent From: AlphaOne Building Consent System
> Sent Date: 15 June 2021 09:36:22 am - Tuesday

ATTACHMENTS:

- 390076 - EDGE - PIM-15-06-21.pdf

Email #49437: BC210208

Project ID: 210208
Date Received: 2021-06-15 13:45:06
Sender: buildingsupport@kaipara.govt.nz
Checked By: Shalisha Blom
Accepted By: Sharon Campbell
Subject:
Information Received Via Email: ATT CATHY THOMAS - SHARON CAMPBELL FW: 390076 Edge - BC210208 Lot 8, Sampsons Way Dargaville 0310
Message:

From: Ean Dawson <ean.dawson@gjgardner.co.nz>
Sent: Tuesday, 15 June 2021 12:14 PM
To: cathytengineer@gmail.com
Cc: Julieanne Mollet <julieanne.mollet@gjgardner.co.nz>; Michael Sudfelt <michael.sudfelt@gjgardner.co.nz>; Building Support <buildingsupport@kaipara.govt.nz>
Subject: Fwd: 390076 Edge - BC210208 -- Lot 8, Sampsons Way Dargaville 0310

CAUTION: This email originated from outside Kaipara District Council. Do not click links or open attachments unless you recognise the sender and know the content is safe.

Tena koe Cathy,

Thank you receiving my call earlier today.

As discussed could you please follow up with RSEng/Cook Costello regarding how the subsoil reduces pressure/settlement on the raft slab.

As I mentioned that the two engineers are competing for the same work so I would imagine that CC would oblige giving you your required information to satisfy the RFI.

If we could move on this as soon as possible it would be much appreciated.

Ng? mihi nui,
Ean Dawson

Contracts Manager | Sudfelt Construction Ltd - Whangarei / Kaipara Franchisee for G.J. Gardner Homes
Ph: (09) 437 5666<tel:+6494375666> | Web: www.gjgardner.co.nz<http://www.gjgardner.co.nz/>
[http://www.gjgardner.co.nz/assets/Uploads/Facebook.jpg]<https://www.facebook.com/GJGardnerHomesNewZealand> [http://www.gjgardner.co.nz/assets/Uploads/Pinterest.jpg] <http://www.pinterest.com/GJGardnerNZ/>

[https://www.gjgardner.co.nz/assets/Uploads/Insta8.jpg] <https://www.instagram.com/gjgardnerhomesnz/?hl>

[http://www.gjgardner.co.nz/assets/Uploads/GJGardner.jpg]<http://www.gjgardner.co.nz/>

This email, including attachments, may contain information which is confidential or subject to legal privilege or copyright. If you are not the intended recipient, please notify us immediately and then please delete all copies of this email from your system. You must not use, disseminate, distribute or reproduce this email, any attachments, or any part thereof if you are not the intended recipient.

Email communications are not secure and are not guaranteed by us to be free of unauthorised interference, error or virus. Anyone who communicates with us by email is taken to accept this risk. To the maximum extent permitted by law we are not liable for any virus or other defect in this email or in any attachment (or for any unauthorized changes made to or other interference with this email or to any attachment).

Please note that this communication does not designate an information system for the purposes of the Electronic Transactions Act 2002.

---------- Forwarded message ---------
From: Julieanne Mollet <julieanne.mollet@gjgardner.co.nz<mailto:julieanne.mollet@gjgardner.co.nz>>
Date: Tue, 15 Jun 2021 at 11:49
Subject: Fwd: 390076 Edge - BC210208 -- Lot 8, Sampsons Way Dargaville 0310
To: Ean Dawson <ean.dawson@gjgardner.co.nz<mailto:ean.dawson@gjgardner.co.nz>>

Regards
Julieanne Mollet

Administrator | Sudfelt Construction Ltd - Whangarei / Kaipara Franchisee for G.J. Gardner Homes
Ph: (09) 437 5666<tel:+6494375666> | Web: www.gjgardner.co.nz<http://www.gjgardner.co.nz/>
[http://www.gjgardner.co.nz/assets/Uploads/Facebook.jpg]<https://www.facebook.com/GJGardnerHomesNewZealand> [http://www.gjgardner.co.nz/assets/Uploads/Pinterest.jpg] <http://www.pinterest.com/GJGardnerNZ/>
[https://www.gjgardner.co.nz/assets/Uploads/Insta8.jpg] <https://www.instagram.com/gjgardnerhomesnz/?hl>

[http://www.gjgardner.co.nz/assets/Uploads/GJGardner.jpg]<http://www.gjgardner.co.nz/>

This email, including attachments, may contain information which is confidential or subject to legal privilege or copyright. If you are not the intended recipient, please notify us immediately and then please delete all copies of this email from your system. You must not use, disseminate, distribute or reproduce this email, any attachments, or any part thereof if you are not the intended recipient.

Email communications are not secure and are not guaranteed by us to be free of unauthorised interference, error or virus. Anyone who communicates with us by email is taken to accept this risk. To the maximum extent permitted by law we are not liable for any virus or other defect in this email or in any attachment (or for any unauthorized changes made to or other interference with this email or to any attachment).

Please note that this communication does not designate an information system for the purposes of the Electronic Transactions Act 2002

---------- Forwarded message ---------
From: Julieanne Mollet <julieanne.mollet@gjgardner.co.nz<mailto:julieanne.mollet@gjgardner.co.nz>>
Date: Fri, 11 Jun 2021 at 15:47
Subject: 390076 Edge - BC210208 -- Lot 8, Sampsons Way Dargaville 0310
To: <cathytengineer@gmail.com<mailto:cathytengineer@gmail.com>>,
<sharon.campbell@complynz.co.nz<mailto:sharon.campbell@complynz.co.nz>>

Hi Cathy/Sharon

Can I please get an update on the RFI response for BC 210208 as per the below response we provided on 28 May.

RFI 1: Structural engineer review: The Hawthorn Geddes geotechnical report states that a waffle foundation slab is not suitable for this site due to ground water encountered at less than 0.6m below ground surface. Please confirm your drainage proposal with the Hawthorn Geddes geotechnical engineer. Provide confirmation that the drainage system proposed would be effective in mitigating the issue with high water table.

RFI 2: A response was received 3 May, which was confirmation of RS Eng design. Comment from Hawthorn Geddes geotechnical engineer is required to confirm that this design is sufficient.

RFI 4: We are still waiting a response to this RFI item.

Response provided:

The following is what RS Eng responded with:
Noted that the subdivision report outlines that a waffle foundation slab was not suitable due to elevated groundwater. RS Eng has addressed this issue by installing a drain on top of the hard pan, around the hardfill to remove groundwater from the building area, refer page 3 of calculations. This has been installed on a number of other properties in the area and along with keeping the dwelling elevated has worked effectively. It is not appropriate for Hawthorn Geddes to comment on RS Eng design approach for the dwelling.

28 May 2021 9:52 am

Thanks

Regards
Julieanne Mollet

Administrator | Sudfelt Construction Ltd - Whangarei / Kaipara Franchisee for G.J. Gardner Homes
Ph: (09) 437 5666<tel:+6494375666> | Web: www.gjgardner.co.nz<http://www.gjgardner.co.nz/>
[http://www.gjgardner.co.nz/assets/Uploads/Facebook.jpg]<https://www.facebook.com/GJGardnerHomesNewZealand> [http://www.gjgardner.co.nz/assets/Uploads/Pinterest.jpg] <http://www.pinterest.com/GJGardnerNZ/>

[https://www.gjgardner.co.nz/assets/Uploads/Insta8.jpg] <https://www.instagram.com/gjgardnerhomesnz/?hl>

[http://www.gjgardner.co.nz/assets/Uploads/GJGardner.jpg]<http://www.gjgardner.co.nz/>

This email, including attachments, may contain information which is confidential or subject to legal privilege or copyright. If you are not the intended recipient, please notify us immediately and then please delete all copies of this email from your system. You must not use, disseminate, distribute or reproduce this email, any attachments, or any part thereof if you are not the intended recipient.

Email communications are not secure and are not guaranteed by us to be free of unauthorised interference, error or virus. Anyone who communicates with us by email is taken to accept this risk. To the maximum extent permitted by law we are not liable for any virus or other defect in this email or in any attachment (or for any unauthorized changes made to or other interference with this email or to any attachment).

Please note that this communication does not designate an information system for the purposes of the Electronic Transactions Act 2002

Email #49525: BC210208

Project ID: 210208
Date Received: 2021-06-17 11:20:10
Sender: buildingsupport@kaipara.govt.nz
Checked By: Jamie Nikora
Accepted By: Jamie Nikora
Subject:
Information Received Via Email: FW: 390076 Edge - BC210208 Lot 8, Sampsons Way Dargaville 0310
Message:

From: Catherine Thomas <cathytengineer@gmail.com>
Sent: Thursday, 17 June 2021 9:05 AM
To: Ean Dawson <ean.dawson@gjgardner.co.nz>
Cc: Julieanne Mollet <julieanne.mollet@gjgardner.co.nz>; Michael Sudfelt <michael.sudfelt@gjgardner.co.nz>; Building Support <buildingsupport@kaipara.govt.nz>
Subject: Re: 390076 Edge - BC210208 -- Lot 8, Sampsons Way Dargaville 0310

CAUTION: This email originated from outside Kaipara District Council. Do not click links or open attachments unless you recognise the sender and know the content is safe.

Hello Ean, I have elaborated on my concerns regarding the high water table and another RFI letter will be sent. RSEng either need to provide more detailed information demonstrating that the drainage system they propose is adequate or consider a piled waffle raft system to prevent potential future settlement. There could be additional consents for other similar houses on this subdivision so it is important that any risk is mitigated.

Regards
Cathy

On Tue, Jun 15, 2021 at 12:13 PM Ean Dawson <ean.dawson@gjgardner.co.nz<mailto:ean.dawson@gjgardner.co.nz>> wrote:
Tena koe Cathy,

Thank you receiving my call earlier today.

As discussed could you please follow up with RSEng/Cook Costello regarding how the subsoil reduces pressure/settlement on the raft slab.

As I mentioned that the two engineers are competing for the same work so I would imagine that CC would oblige giving you your required information to satisfy the RFI.

If we could move on this as soon as possible it would be much appreciated.

Ng? mihi nui,
Ean Dawson

Contracts Manager | Sudfelt Construction Ltd - Whangarei / Kaipara Franchisee for G.J. Gardner Homes
Ph: (09) 437 5666<tel:+6494375666> | Web: www.gjgardner.co.nz<http://www.gjgardner.co.nz/>
[http://www.gjgardner.co.nz/assets/Uploads/Facebook.jpg]<https://www.facebook.com/GJGardnerHomesNewZealand> [http://www.gjgardner.co.nz/assets/Uploads/Pinterest.jpg] <http://www.pinterest.com/GJGardnerNZ/>
[https://www.gjgardner.co.nz/assets/Uploads/Insta8.jpg] <https://www.instagram.com/gjgardnerhomesnz/?hl>

[http://www.gjgardner.co.nz/assets/Uploads/GJGardner.jpg]<http://www.gjgardner.co.nz/>

This email, including attachments, may contain information which is confidential or subject to legal privilege or copyright. If you are not the intended recipient, please notify us immediately and then please delete all copies of this email from your system. You must not use, disseminate, distribute or reproduce this email, any attachments, or any part thereof if you are not the intended recipient.

Email communications are not secure and are not guaranteed by us to be free of unauthorised interference, error or virus. Anyone who communicates with us by email is taken to accept this risk. To the maximum extent permitted by law we are not liable for any virus or other defect in this email or in any attachment (or for any unauthorized changes made to or other interference with this email or to any attachment).

Please note that this communication does not designate an information system for the purposes of the Electronic Transactions Act 2002.

---------- Forwarded message ---------
From: Julieanne Mollet <julieanne.mollet@gjgardner.co.nz<mailto:julieanne.mollet@gjgardner.co.nz>>
Date: Tue, 15 Jun 2021 at 11:49
Subject: Fwd: 390076 Edge - BC210208 -- Lot 8, Sampsons Way Dargaville 0310
To: Ean Dawson <ean.dawson@gjgardner.co.nz<mailto:ean.dawson@gjgardner.co.nz>>

Regards
Julieanne Mollet

Administrator | Sudfelt Construction Ltd - Whangarei / Kaipara Franchisee for G.J. Gardner Homes
Ph: (09) 437 5666<tel:+6494375666> | Web: www.gjgardner.co.nz<http://www.gjgardner.co.nz/>
[http://www.gjgardner.co.nz/assets/Uploads/Facebook.jpg]<https://www.facebook.com/GJGardnerHomesNewZealand> [http://www.gjgardner.co.nz/assets/Uploads/Pinterest.jpg] <http://www.pinterest.com/GJGardnerNZ/>
[https://www.gjgardner.co.nz/assets/Uploads/Insta8.jpg] <https://www.instagram.com/gjgardnerhomesnz/?hl>

[http://www.gjgardner.co.nz/assets/Uploads/GJGardner.jpg]<http://www.gjgardner.co.nz/>

This email, including attachments, may contain information which is confidential or subject to legal privilege or

copyright. If you are not the intended recipient, please notify us immediately and then please delete all copies of this email from your system. You must not use, disseminate, distribute or reproduce this email, any attachments, or any part thereof if you are not the intended recipient.

Email communications are not secure and are not guaranteed by us to be free of unauthorised interference, error or virus. Anyone who communicates with us by email is taken to accept this risk. To the maximum extent permitted by law we are not liable for any virus or other defect in this email or in any attachment (or for any unauthorized changes made to or other interference with this email or to any attachment).

Please note that this communication does not designate an information system for the purposes of the Electronic Transactions Act 2002

---------- Forwarded message ---------
From: Julieanne Mollet <julieanne.mollet@gjgardner.co.nz<mailto:julieanne.mollet@gjgardner.co.nz>>
Date: Fri, 11 Jun 2021 at 15:47
Subject: 390076 Edge - BC210208 -- Lot 8, Sampsons Way Dargaville 0310
To: <cathytengineer@gmail.com<mailto:cathytengineer@gmail.com>>,
<sharon.campbell@complynz.co.nz<mailto:sharon.campbell@complynz.co.nz>>

Hi Cathy/Sharon

Can I please get an update on the RFI response for BC 210208 as per the below response we provided on 28 May.

RFI 1: Structural engineer review: The Hawthorn Geddes geotechnical report states that a waffle foundation slab is not suitable for this site due to ground water encountered at less than 0.6m below ground surface. Please confirm your drainage proposal with the Hawthorn Geddes geotechnical engineer. Provide confirmation that the drainage system proposed would be effective in mitigating the issue with high water table.

RFI 2: A response was received 3 May, which was confirmation of RS Eng design. Comment from Hawthorn Geddes geotechnical engineer is required to confirm that this design is sufficient.

RFI 4: We are still waiting a response to this RFI item.

Response provided:

The following is what RS Eng responded with:
Noted that the subdivision report outlines that a waffle foundation slab was not suitable due to elevated groundwater. RS Eng has addressed this issue by installing a drain on top of the hard pan, around the hardfill to remove groundwater from the building area, refer page 3 of calculations. This has been installed on a number of other properties in the area and along with keeping the dwelling elevated has worked effectively. It is not appropriate for Hawthorn Geddes to comment on RS Eng design approach for the dwelling.

28 May 2021 9:52 am

Thanks

Regards
Julieanne Mollet

Administrator | Sudfelt Construction Ltd - Whangarei / Kaipara Franchisee for G.J. Gardner Homes
Ph: (09) 437 5666<tel:+6494375666> | Web: www.gjgardner.co.nz<http://www.gjgardner.co.nz/>
[http://www.gjgardner.co.nz/assets/Uploads/Facebook.jpg]<https://www.facebook.com/GJGardnerHomesNewZealand> [http://www.gjgardner.co.nz/assets/Uploads/Pinterest.jpg] <http://www.pinterest.com/GJGardnerNZ/>
[https://www.gjgardner.co.nz/assets/Uploads/Insta8.jpg] <https://www.instagram.com/gjgardnerhomesnz/?hl>

[http://www.gjgardner.co.nz/assets/Uploads/GJGardner.jpg]<http://www.gjgardner.co.nz/>

This email, including attachments, may contain information which is confidential or subject to legal privilege or copyright. If you are not the intended recipient, please notify us immediately and then please delete all copies of this email from your system. You must not use, disseminate, distribute or reproduce this email, any attachments, or any part thereof if you are not the intended recipient.

Email communications are not secure and are not guaranteed by us to be free of unauthorised interference, error or virus. Anyone who communicates with us by email is taken to accept this risk. To the maximum extent permitted by law we are not liable for any virus or other defect in this email or in any attachment (or for any unauthorized changes made to or other interference with this email or to any attachment).

Please note that this communication does not designate an information system for the purposes of the Electronic Transactions Act 2002

Email #49526: BC210208

Project ID: 210208
Date Received: 2021-06-17 11:25:02
Sender: buildingsupport@kaipara.govt.nz
Checked By: Cathy
Accepted By: Sharon Campbell
Subject:
Information Received Via Email: ATTN CATHERINE THOMAS FW: 390076 Edge - BC210208 Lot 8, Sampsons Way Dargaville 0310
Message:

From: Ean Dawson <ean.dawson@gjgardner.co.nz>
Sent: Thursday, 17 June 2021 10:37 AM
To: Catherine Thomas <cathytengineer@gmail.com>
Cc: Michael Sudfelt <michael.sudfelt@gjgardner.co.nz>; Julieanne Mollet <julieanne.mollet@gjgardner.co.nz>; Building Support <buildingsupport@kaipara.govt.nz>
Subject: Re: 390076 Edge - BC210208 -- Lot 8, Sampsons Way Dargaville 0310

CAUTION: This email originated from outside Kaipara District Council. Do not click links or open attachments unless you recognise the sender and know the content is safe.

Kia ora Catherine,

After our discussions you had made it clear that you were going to talk to RSeng and/or Hawthorn Geddes on this matter, and as previously stated if there is an issue on just this property there are another 5 houses that has been constructed with no concerns made at BC processing stage. I don't think a 3 week response period is a valid solution to get the best result for the client.

Does KDC engage a peer reviewer who is suitably qualified in the field of Civil/Geotech engineering who can say that this design is appropriate?

Ng? mihi nui,
Ean Dawson

Contracts Manager | Sudfelt Construction Ltd - Whangarei / Kaipara Franchisee for G.J. Gardner Homes
Ph: (09) 437 5666<tel:+6494375666> | Web: www.gjgardner.co.nz<http://www.gjgardner.co.nz/>
[http://www.gjgardner.co.nz/assets/Uploads/Facebook.jpg]<https://www.facebook.com/GJGardnerHomesNewZealand> [http://www.gjgardner.co.nz/assets/Uploads/Pinterest.jpg] <http://www.pinterest.com/GJGardnerNZ/>
[https://www.gjgardner.co.nz/assets/Uploads/Insta8.jpg] <https://www.instagram.com/gjgardnerhomesnz/?hl>

[http://www.gjgardner.co.nz/assets/Uploads/GJGardner.jpg]<http://www.gjgardner.co.nz/>

This email, including attachments, may contain information which is confidential or subject to legal privilege or copyright. If you are not the intended recipient, please notify us immediately and then please delete all copies of this email from your system. You must not use, disseminate, distribute or reproduce this email, any attachments, or any part thereof if you are not the intended recipient.

Email communications are not secure and are not guaranteed by us to be free of unauthorised interference, error or virus. Anyone who communicates with us by email is taken to accept this risk. To the maximum extent permitted by law we are not liable for any virus or other defect in this email or in any attachment (or for any unauthorized changes made to or other interference with this email or to any attachment).

Please note that this communication does not designate an information system for the purposes of the Electronic Transactions Act 2002.

On Thu, 17 Jun 2021 at 09:04, Catherine Thomas
<cathytengineer@gmail.com<mailto:cathytengineer@gmail.com>> wrote:
Hello Ean, I have elaborated on my concerns regarding the high water table and another RFI letter will be sent. RSEng either need to provide more detailed information demonstrating that the drainage system they propose is adequate or consider a piled waffle raft system to prevent potential future settlement. There could be additional consents for other similar houses on this subdivision so it is important that any risk is mitigated.

Regards
Cathy

On Tue, Jun 15, 2021 at 12:13 PM Ean Dawson
<ean.dawson@gjgardner.co.nz<mailto:ean.dawson@gjgardner.co.nz>> wrote:
Tena koe Cathy,

Thank you receiving my call earlier today.

As discussed could you please follow up with RSEng/Cook Costello regarding how the subsoil reduces pressure/settlement on the raft slab.

As I mentioned that the two engineers are competing for the same work so I would imagine that CC would oblige giving you your required information to satisfy the RFI.

If we could move on this as soon as possible it would be much appreciated.

Ng? mihi nui,
Ean Dawson

Contracts Manager | Sudfelt Construction Ltd - Whangarei / Kaipara Franchisee for G.J. Gardner Homes
Ph: (09) 437 5666<tel:+6494375666> | Web: www.gjgardner.co.nz<http://www.gjgardner.co.nz/>

[http://www.gjgardner.co.nz/assets/Uploads/Facebook.jpg]<https://www.facebook.com/GJGardnerHomesNewZealand> [http://www.gjgardner.co.nz/assets/Uploads/Pinterest.jpg] <http://www.pinterest.com/GJGardnerNZ/> [https://www.gjgardner.co.nz/assets/Uploads/Insta8.jpg] <https://www.instagram.com/gjgardnerhomesnz/?hl>

[http://www.gjgardner.co.nz/assets/Uploads/GJGardner.jpg]<http://www.gjgardner.co.nz/>

This email, including attachments, may contain information which is confidential or subject to legal privilege or copyright. If you are not the intended recipient, please notify us immediately and then please delete all copies of this email from your system. You must not use, disseminate, distribute or reproduce this email, any attachments, or any part thereof if you are not the intended recipient.

Email communications are not secure and are not guaranteed by us to be free of unauthorised interference, error or virus. Anyone who communicates with us by email is taken to accept this risk. To the maximum extent permitted by law we are not liable for any virus or other defect in this email or in any attachment (or for any unauthorized changes made to or other interference with this email or to any attachment).

Please note that this communication does not designate an information system for the purposes of the Electronic Transactions Act 2002.

---------- Forwarded message ---------
From: Julieanne Mollet <julieanne.mollet@gjgardner.co.nz<mailto:julieanne.mollet@gjgardner.co.nz>>
Date: Tue, 15 Jun 2021 at 11:49
Subject: Fwd: 390076 Edge - BC210208 -- Lot 8, Sampsons Way Dargaville 0310
To: Ean Dawson <ean.dawson@gjgardner.co.nz<mailto:ean.dawson@gjgardner.co.nz>>

Regards
Julieanne Mollet

Administrator | Sudfelt Construction Ltd - Whangarei / Kaipara Franchisee for G.J. Gardner Homes
Ph: (09) 437 5666<tel:+6494375666> | Web: www.gjgardner.co.nz<http://www.gjgardner.co.nz/>
[http://www.gjgardner.co.nz/assets/Uploads/Facebook.jpg]<https://www.facebook.com/GJGardnerHomesNewZealand> [http://www.gjgardner.co.nz/assets/Uploads/Pinterest.jpg] <http://www.pinterest.com/GJGardnerNZ/> [https://www.gjgardner.co.nz/assets/Uploads/Insta8.jpg] <https://www.instagram.com/gjgardnerhomesnz/?hl>

[http://www.gjgardner.co.nz/assets/Uploads/GJGardner.jpg]<http://www.gjgardner.co.nz/>

This email, including attachments, may contain information which is confidential or subject to legal privilege or copyright. If you are not the intended recipient, please notify us immediately and then please delete all copies of this email from your system. You must not use, disseminate, distribute or reproduce this email, any attachments, or any part thereof if you are not the intended recipient.

Email communications are not secure and are not guaranteed by us to be free of unauthorised interference, error or virus. Anyone who communicates with us by email is taken to accept this risk. To the maximum extent permitted by law we are not liable for any virus or other defect in this email or in any attachment (or for any unauthorized changes

made to or other interference with this email or to any attachment).

Please note that this communication does not designate an information system for the purposes of the Electronic Transactions Act 2002

---------- Forwarded message ---------
From: Julieanne Mollet <julieanne.mollet@gjgardner.co.nz<mailto:julieanne.mollet@gjgardner.co.nz>>
Date: Fri, 11 Jun 2021 at 15:47
Subject: 390076 Edge - BC210208 -- Lot 8, Sampsons Way Dargaville 0310
To: <cathytengineer@gmail.com<mailto:cathytengineer@gmail.com>>,
<sharon.campbell@complynz.co.nz<mailto:sharon.campbell@complynz.co.nz>>

Hi Cathy/Sharon

Can I please get an update on the RFI response for BC 210208 as per the below response we provided on 28 May.

RFI 1: Structural engineer review: The Hawthorn Geddes geotechnical report states that a waffle foundation slab is not suitable for this site due to ground water encountered at less than 0.6m below ground surface. Please confirm your drainage proposal with the Hawthorn Geddes geotechnical engineer. Provide confirmation that the drainage system proposed would be effective in mitigating the issue with high water table.

RFI 2: A response was received 3 May, which was confirmation of RS Eng design. Comment from Hawthorn Geddes geotechnical engineer is required to confirm that this design is sufficient.

RFI 4: We are still waiting a response to this RFI item.

Response provided:

The following is what RS Eng responded with:
Noted that the subdivision report outlines that a waffle foundation slab was not suitable due to elevated groundwater. RS Eng has addressed this issue by installing a drain on top of the hard pan, around the hardfill to remove groundwater from the building area, refer page 3 of calculations. This has been installed on a number of other properties in the area and along with keeping the dwelling elevated has worked effectively. It is not appropriate for Hawthorn Geddes to comment on RS Eng design approach for the dwelling.

28 May 2021 9:52 am

Thanks

Regards
Julieanne Mollet

Administrator | Sudfelt Construction Ltd - Whangarei / Kaipara Franchisee for G.J. Gardner Homes
Ph: (09) 437 5666<tel:+6494375666> | Web: www.gjgardner.co.nz<http://www.gjgardner.co.nz/>

[http://www.gjgardner.co.nz/assets/Uploads/Facebook.jpg]<https://www.facebook.com/GJGardnerHomesNewZealand> [http://www.gjgardner.co.nz/assets/Uploads/Pinterest.jpg] <http://www.pinterest.com/GJGardnerNZ/> [https://www.gjgardner.co.nz/assets/Uploads/Insta8.jpg] <https://www.instagram.com/gjgardnerhomesnz/?hl>

[http://www.gjgardner.co.nz/assets/Uploads/GJGardner.jpg]<http://www.gjgardner.co.nz/>

This email, including attachments, may contain information which is confidential or subject to legal privilege or copyright. If you are not the intended recipient, please notify us immediately and then please delete all copies of this email from your system. You must not use, disseminate, distribute or reproduce this email, any attachments, or any part thereof if you are not the intended recipient.

Email communications are not secure and are not guaranteed by us to be free of unauthorised interference, error or virus. Anyone who communicates with us by email is taken to accept this risk. To the maximum extent permitted by law we are not liable for any virus or other defect in this email or in any attachment (or for any unauthorized changes made to or other interference with this email or to any attachment).

Please note that this communication does not designate an information system for the purposes of the Electronic Transactions Act 2002

Email #49593: BC210208

Project ID: 210208
Date Received: 2021-06-20 22:15:03
Sender: mailer-daemon@smtp.sitehost.co.nz
Checked By: Sharon Campbell
Accepted By: Sharon Campbell
Subject:
Information Received Via Email: Undelivered Mail Returned to Sender
Message:
This is the mail system at host smtp.sitehost.co.nz.

I'm sorry to have to inform you that your message could not
be delivered to one or more recipients. It's attached below.

For further assistance, please send mail to postmaster.

If you do so, please include this problem report. You can
delete your own text from the attached returned message.

The mail system

<ean.dawson@gjgardier.co.nz>: Host or domain name not found. Name service error
for namegardier.co.nz type=A: Host not found
Reporting-MTA: dns; smtp.sitehost.co.nz
X-Postfix-Queue-ID: 7375128FB86
X-Postfix-Sender: rfc822; 210208@kdc.abcs.co.nz
Arrival-Date: Sun, 20 Jun 2021 22:10:40 +1200 (NZST)

Final-Recipient: rfc822; ean.dawson@gjgardier.co.nz
Original-Recipient: rfc822;ean.dawson@gjgardier.co.nz
Action: failed
Status: 5.4.4
Diagnostic-Code: X-Postfix; Host or domain name not found. Name service error
for namegardier.co.nz type=A: Host not foundReturn-Path: <210208@kdc.abcs.co.nz>

Content-Type: text/plain; charset="iso-8859-1"
Content-Transfer-Encoding: 8bit

I contacted Hawthorne Geddes on Friday. The geotechnical report was prepared for the subdivision resource consent rather than specifically for this site. They cannot provide advice on a specific building consent without being

engaged to do so. After the discussion with Hawthorne Geddes, the best way forward is to obtain advice on the issue from a Chartered Geotechnical engineer as they are competent to do so. We will also include a building platform construction review and PS4 from a Chartered Geotechnical engineer as a condition of the consent.

Regards

Cathy
Specialist Input CPEng
Kaipara District Council
Unit 6 - The Hub, 6 Molesworth Drive, Mangawhai 0505
P: (09) 439 3123 | E: buildingsupport@kaipara.govt.nz | W: www.kaipara.govt.nz

From: Ean Dawson
Sent: Thursday, 17 June 2021 10:37 AM
To: Catherine Thomas
Cc: Michael Sudfelt ; Julieanne Mollet ; Building Support
Subject: Re: 390076 Edge - BC210208 -- Lot 8, Sampsons Way Dargaville 0310

CAUTION: This email originated from outside Kaipara District Council. Do not click links or open attachments unless you recognise the sender and know the content is safe.

Kia ora Catherine,

After our discussions you had made it clear that you were going to talk to RSeng and/or Hawthorn Geddes on this matter, and as previously stated if there is an issue on just this property there are another 5 houses that has been constructed with no concerns made at BC processing stage. I don't think a 3 week response period is a valid solution to get the best result for the client.

Does KDC engage a peer reviewer who is suitably qualified in the field of Civil/Geotech engineering who can say that this design is appropriate?

Ng? mihi nui,
Ean Dawson

Contracts Manager | Sudfelt Construction Ltd - Whangarei / Kaipara Franchisee for G.J. Gardner Homes
Ph: (09) 437 5666 | Web: www.gjgardner.co.nz
[http://www.gjgardner.co.nz/assets/Uploads/Facebook.jpg] [http://www.gjgardner.co.nz/assets/Uploads/Pinterest.jpg] [https://www.gjgardner.co.nz/assets/Uploads/Insta8.jpg]

[http://www.gjgardner.co.nz/assets/Uploads/GJGardner.jpg]

This email, including attachments, may contain information which is confidential or subject to legal privilege or copyright. If you are not the intended recipient, please notify us immediately and then please delete all copies of this email from your system. You must not use, disseminate, distribute or reproduce this email, any attachments, or any

part thereof if you are not the intended recipient.

Email communications are not secure and are not guaranteed by us to be free of unauthorised interference, error or virus. Anyone who communicates with us by email is taken to accept this risk. To the maximum extent permitted by law we are not liable for any virus or other defect in this email or in any attachment (or for any unauthorized changes made to or other interference with this email or to any attachment).

Please note that this communication does not designate an information system for the purposes of the Electronic Transactions Act 2002.

On Thu, 17 Jun 2021 at 09:04, Catherine Thomas wrote:
Hello Ean, I have elaborated on my concerns regarding the high water table and another RFI letter will be sent. RSEng either need to provide more detailed information demonstrating that the drainage system they propose is adequate or consider a piled waffle raft system to prevent potential future settlement. There could be additional consents for other similar houses on this subdivision so it is important that any risk is mitigated.

Regards
Cathy

On Tue, Jun 15, 2021 at 12:13 PM Ean Dawson wrote:
Tena koe Cathy,

Thank you receiving my call earlier today.

As discussed could you please follow up with RSEng/Cook Costello regarding how the subsoil reduces pressure/settlement on the raft slab.

As I mentioned that the two engineers are competing for the same work so I would imagine that CC would oblige giving you your required information to satisfy the RFI.

If we could move on this as soon as possible it would be much appreciated.

Ng? mihi nui,
Ean Dawson

Contracts Manager | Sudfelt Construction Ltd - Whangarei / Kaipara Franchisee for G.J. Gardner Homes
Ph: (09) 437 5666 | Web: www.gjgardner.co.nz
[http://www.gjgardner.co.nz/assets/Uploads/Facebook.jpg] [http://www.gjgardner.co.nz/assets/Uploads/Pinterest.jpg] [https://www.gjgardner.co.nz/assets/Uploads/Insta8.jpg]

[http://www.gjgardner.co.nz/assets/Uploads/GJGardner.jpg]

This email, including attachments, may contain information which is confidential or subject to legal privilege or copyright. If you are not the intended recipient, please notify us immediately and then please delete all copies of this

email from your system. You must not use, disseminate, distribute or reproduce this email, any attachments, or any part thereof if you are not the intended recipient.

Email communications are not secure and are not guaranteed by us to be free of unauthorised interference, error or virus. Anyone who communicates with us by email is taken to accept this risk. To the maximum extent permitted by law we are not liable for any virus or other defect in this email or in any attachment (or for any unauthorized changes made to or other interference with this email or to any attachment).

Please note that this communication does not designate an information system for the purposes of the Electronic Transactions Act 2002.

---------- Forwarded message ---------
From: Julieanne Mollet
Date: Tue, 15 Jun 2021 at 11:49
Subject: Fwd: 390076 Edge - BC210208 -- Lot 8, Sampsons Way Dargaville 0310
To: Ean Dawson

Regards
Julieanne Mollet

Administrator | Sudfelt Construction Ltd - Whangarei / Kaipara Franchisee for G.J. Gardner Homes
Ph: (09) 437 5666 | Web: www.gjgardner.co.nz
[http://www.gjgardner.co.nz/assets/Uploads/Facebook.jpg] [http://www.gjgardner.co.nz/assets/Uploads/Pinterest.jpg] [https://www.gjgardner.co.nz/assets/Uploads/Insta8.jpg]

[http://www.gjgardner.co.nz/assets/Uploads/GJGardner.jpg]

This email, including attachments, may contain information which is confidential or subject to legal privilege or copyright. If you are not the intended recipient, please notify us immediately and then please delete all copies of this email from your system. You must not use, disseminate, distribute or reproduce this email, any attachments, or any part thereof if you are not the intended recipient.

Email communications are not secure and are not guaranteed by us to be free of unauthorised interference, error or virus. Anyone who communicates with us by email is taken to accept this risk. To the maximum extent permitted by law we are not liable for any virus or other defect in this email or in any attachment (or for any unauthorized changes made to or other interference with this email or to any attachment).

Please note that this communication does not designate an information system for the purposes of the Electronic Transactions Act 2002

---------- Forwarded message ---------
From: Julieanne Mollet
Date: Fri, 11 Jun 2021 at 15:47
Subject: 390076 Edge - BC210208 -- Lot 8, Sampsons Way Dargaville 0310

To: ,

Hi Cathy/Sharon

Can I please get an update on the RFI response for BC 210208 as per the below response we provided on 28 May.

RFI 1: Structural engineer review: The Hawthorn Geddes geotechnical report states that a waffle foundation slab is not suitable for this site due to ground water encountered at less than 0.6m below ground surface. Please confirm your drainage proposal with the Hawthorn Geddes geotechnical engineer. Provide confirmation that the drainage system proposed would be effective in mitigating the issue with high water table.

RFI 2: A response was received 3 May, which was confirmation of RS Eng design. Comment from Hawthorn Geddes geotechnical engineer is required to confirm that this design is sufficient.

RFI 4: We are still waiting a response to this RFI item.

Response provided:

The following is what RS Eng responded with:
Noted that the subdivision report outlines that a waffle foundation slab was not suitable due to elevated groundwater. RS Eng has addressed this issue by installing a drain on top of the hard pan, around the hardfill to remove groundwater from the building area, refer page 3 of calculations. This has been installed on a number of other properties in the area and along with keeping the dwelling elevated has worked effectively. It is not appropriate for Hawthorn Geddes to comment on RS Eng design approach for the dwelling.

28 May 2021 9:52 am

Thanks

Regards
Julieanne Mollet

Administrator | Sudfelt Construction Ltd - Whangarei / Kaipara Franchisee for G.J. Gardner Homes
Ph: (09) 437 5666 | Web: www.gjgardner.co.nz
[http://www.gjgardner.co.nz/assets/Uploads/Facebook.jpg] [http://www.gjgardner.co.nz/assets/Uploads/Pinterest.jpg] [https://www.gjgardner.co.nz/assets/Uploads/Insta8.jpg]

[http://www.gjgardner.co.nz/assets/Uploads/GJGardner.jpg]

This email, including attachments, may contain information which is confidential or subject to legal privilege or copyright. If you are not the intended recipient, please notify us immediately and then please delete all copies of this email from your system. You must not use, disseminate, distribute or reproduce this email, any attachments, or any part thereof if you are not the intended recipient.

Email communications are not secure and are not guaranteed by us to be free of unauthorised interference, error or virus. Anyone who communicates with us by email is taken to accept this risk. To the maximum extent permitted by law we are not liable for any virus or other defect in this email or in any attachment (or for any unauthorized changes made to or other interference with this email or to any attachment).

Please note that this communication does not designate an information system for the purposes of the Electronic Transactions Act 2002

DISCLAIMERThis message is for the designated recipient(s) only, and may contain confidential and/or privileged information. If you have received it in error, please delete it and advise the sender immediately. You should not copy or use it for any other purpose, nor disclose its contents to any other person.Designated Recipient(s): ean.dawson@gjgardier.co.nz, sharon.campbell@complynz.co.nzSent From: AlphaOne Building Consent SystemSent Date: 20 June 2021 22:10:40 pm - Sunday

--I contacted Hawthorne Geddes on Friday. The geotechnical report was prepared for the subdivision resource consent rather than specifically for this site. They cannot provide advice on a specific building consent without being engaged to do so. After the discussion with Hawthorne Geddes, the best way forward is to obtain advice on the issue from a Chartered Geotechnical engineer as they are competent to do so. We will also include a building platform construction review and PS4 from a Chartered Geotechnical engineer as a condition of the consent.

Regards

Cathy
Specialist Input CPEng
Kaipara District Council
Unit 6 - The Hub, 6 Molesworth Drive, Mangawhai 0505
P: (09) 439 3123 | E: buildingsupport@kaipara.govt.nz | W: www.kaipara.govt.nz

From: Ean Dawson
Sent: Thursday, 17 June 2021 10:37 AM
To: Catherine Thomas
Cc: Michael Sudfelt ; Julieanne Mollet ; Building Support
Subject: Re: 390076 Edge - BC210208 a?? Lot 8, Sampsons Way Dargaville 0310

CAUTION: This email originated from outside Kaipara District Council. Do not click links or open attachments unless you recognise the sender and know the content is safe.

Kia ora Catherine,

After our discussions you had made it clear that you were going to talk to RSeng and/or Hawthorn Geddes on this matter, and as previously stated if there is an issue on just this property there are another 5 houses that has been constructed with no concerns made at BC processing stage. I don't think a 3 week response period is a valid solution to get the best result for the client.

Does KDC engage a peer reviewer who is suitably qualified in the field of Civil/Geotech engineering who can say that this design is appropriate?

Ng? mihi nui,
Ean Dawson

Contracts Manager | Sudfelt Construction Ltd - Whangarei / Kaipara Franchisee for G.J. Gardner Homes
Ph: (09) 437 5666 | Web: www.gjgardner.co.nz
[http://www.gjgardner.co.nz/assets/Uploads/Facebook.jpg] [http://www.gjgardner.co.nz/assets/Uploads/Pinterest.jpg] [https://www.gjgardner.co.nz/assets/Uploads/Insta8.jpg]

[http://www.gjgardner.co.nz/assets/Uploads/GJGardner.jpg]

This email, including attachments, may contain information which is confidential or subject to legal privilege or copyright. If you are not the intended recipient, please notify us immediately and then please delete all copies of this email from your system. You must not use, disseminate, distribute or reproduce this email, any attachments, or any part thereof if you are not the intended recipient.

Email communications are not secure and are not guaranteed by us to be free of unauthorised interference, error or virus. Anyone who communicates with us by email is taken to accept this risk. To the maximum extent permitted by law we are not liable for any virus or other defect in this email or in any attachment (or for any unauthorized changes made to or other interference with this email or to any attachment).

Please note that this communication does not designate an information system for the purposes of the Electronic Transactions Act 2002.

On Thu, 17 Jun 2021 at 09:04, Catherine Thomas wrote:
Hello Ean, I have elaborated on my concerns regarding the high water table and another RFI letter will be sent. RSEng either need to provide more detailed information demonstrating that the drainage system they propose is adequate or consider a piled waffle raft system to prevent potential future settlement. There could be additional consents for other similar houses on this subdivision so it is important that any risk is mitigated.

Regards
Cathy

On Tue, Jun 15, 2021 at 12:13 PM Ean Dawson wrote:
Tena koe Cathy,

Thank you receiving my call earlier today.

As discussed could you please follow up with RSEng/Cook Costello regarding how the subsoil reduces pressure/settlement on the raft slab.

As I mentioned that the two engineers are competing for the same work so I would imagine that CC would oblige giving you your required information to satisfy the RFI.

If we could move on this as soon as possible it would be much appreciated.

Ng? mihi nui,
Ean Dawson

Contracts Manager | Sudfelt Construction Ltd - Whangarei / Kaipara Franchisee for G.J. Gardner Homes
Ph: (09) 437 5666 | Web: www.gjgardner.co.nz
[http://www.gjgardner.co.nz/assets/Uploads/Facebook.jpg] [http://www.gjgardner.co.nz/assets/Uploads/Pinterest.jpg] [https://www.gjgardner.co.nz/assets/Uploads/Insta8.jpg]

[http://www.gjgardner.co.nz/assets/Uploads/GJGardner.jpg]

This email, including attachments, may contain information which is confidential or subject to legal privilege or copyright. If you are not the intended recipient, please notify us immediately and then please delete all copies of this email from your system. You must not use, disseminate, distribute or reproduce this email, any attachments, or any part thereof if you are not the intended recipient.

Email communications are not secure and are not guaranteed by us to be free of unauthorised interference, error or virus. Anyone who communicates with us by email is taken to accept this risk. To the maximum extent permitted by law we are not liable for any virus or other defect in this email or in any attachment (or for any unauthorized changes made to or other interference with this email or to any attachment).

Please note that this communication does not designate an information system for the purposes of the Electronic Transactions Act 2002.

---------- Forwarded message ---------
From: Julieanne Mollet
Date: Tue, 15 Jun 2021 at 11:49
Subject: Fwd: 390076 Edge - BC210208 a?? Lot 8, Sampsons Way Dargaville 0310
To: Ean Dawson

Regards
Julieanne Mollet

Administrator | Sudfelt Construction Ltd a?? Whangarei / Kaipara Franchisee for G.J. Gardner Homes
Ph: (09) 437 5666 | Web: www.gjgardner.co.nz
[http://www.gjgardner.co.nz/assets/Uploads/Facebook.jpg] [http://www.gjgardner.co.nz/assets/Uploads/Pinterest.jpg] [https://www.gjgardner.co.nz/assets/Uploads/Insta8.jpg]

[http://www.gjgardner.co.nz/assets/Uploads/GJGardner.jpg]

This email, including attachments, may contain information which is confidential or subject to legal privilege or copyright. If you are not the intended recipient, please notify us immediately and then please delete all copies of this email from your system. You must not use, disseminate, distribute or reproduce this email, any attachments, or any part thereof if you are not the intended recipient.

Email communications are not secure and are not guaranteed by us to be free of unauthorised interference, error or virus. Anyone who communicates with us by email is taken to accept this risk. To the maximum extent permitted by law we are not liable for any virus or other defect in this email or in any attachment (or for any unauthorized changes made to or other interference with this email or to any attachment).

Please note that this communication does not designate an information system for the purposes of the Electronic Transactions Act 2002

---------- Forwarded message ---------
From: Julieanne Mollet
Date: Fri, 11 Jun 2021 at 15:47
Subject: 390076 Edge - BC210208 a?? Lot 8, Sampsons Way Dargaville 0310
To: ,

Hi Cathy/Sharon

Can I please get an update on the RFI response for BC 210208 as per the below response we provided on 28 May.

RFI 1: Structural engineer review: The Hawthorn Geddes geotechnical report states that a waffle foundation slab is not suitable for this site due to ground water encountered at less than 0.6m below ground surface. Please confirm your drainage proposal with the Hawthorn Geddes geotechnical engineer. Provide confirmation that the drainage system proposed would be effective in mitigating the issue with high water table.

RFI 2: A response was received 3 May, which was confirmation of RS Eng design. Comment from Hawthorn Geddes geotechnical engineer is required to confirm that this design is sufficient.

RFI 4: We are still waiting a response to this RFI item.

Response provided:

The following is what RS Eng responded with:
Noted that the subdivision report outlines that a waffle foundation slab was not suitable due to elevated groundwater. RS Eng has addressed this issue by installing a drain on top of the hard pan, around the hardfill to remove groundwater from the building area, refer page 3 of calculations. This has been installed on a number of other properties in the area and along with keeping the dwelling elevated has worked effectively. It is not appropriate for Hawthorn Geddes to comment on RS Eng design approach for the dwelling.

28 May 2021 9:52 am

Thanks

Regards
Julieanne Mollet

Administrator | Sudfelt Construction Ltd a?? Whangarei / Kaipara Franchisee for G.J. Gardner Homes
Ph: (09) 437 5666 | Web: www.gjgardner.co.nz
[http://www.gjgardner.co.nz/assets/Uploads/Facebook.jpg] [http://www.gjgardner.co.nz/assets/Uploads/Pinterest.jpg] [https://www.gjgardner.co.nz/assets/Uploads/Insta8.jpg]

[http://www.gjgardner.co.nz/assets/Uploads/GJGardner.jpg]

This email, including attachments, may contain information which is confidential or subject to legal privilege or copyright. If you are not the intended recipient, please notify us immediately and then please delete all copies of this email from your system. You must not use, disseminate, distribute or reproduce this email, any attachments, or any part thereof if you are not the intended recipient.

Email communications are not secure and are not guaranteed by us to be free of unauthorised interference, error or virus. Anyone who communicates with us by email is taken to accept this risk. To the maximum extent permitted by law we are not liable for any virus or other defect in this email or in any attachment (or for any unauthorized changes made to or other interference with this email or to any attachment).

Please note that this communication does not designate an information system for the purposes of the Electronic Transactions Act 2002

DISCLAIMERThis message is for the designated recipient(s) only, and may contain confidential and/or privileged information. If you have received it in error, please delete it and advise the sender immediately. You should not copy or use it for any other purpose, nor disclose its contents to any other person.Designated Recipient(s): ean.dawson@gjgardier.co.nz, sharon.campbell@complynz.co.nzSent From: AlphaOne Building Consent SystemSent Date: 20 June 2021 22:10:40 pm - Sunday

Email #49594: BC210208

Project ID: 210208
Date Received: 2021-06-20 22:15:03
Sender: mailer-daemon@smtp.sitehost.co.nz
Checked By: Sharon Campbell
Accepted By: Sharon Campbell
Subject:
Information Received Via Email: Undelivered Mail Returned to Sender
Message:
This is the mail system at host smtp.sitehost.co.nz.

I'm sorry to have to inform you that your message could not
be delivered to one or more recipients. It's attached below.

For further assistance, please send mail to postmaster.

If you do so, please include this problem report. You can
delete your own text from the attached returned message.

The mail system

<ean.dawson@gjgardier.co.nz>: Host or domain name not found. Name service error
for namegardier.co.nz type=A: Host not found
Reporting-MTA: dns; smtp.sitehost.co.nz
X-Postfix-Queue-ID: 3A3C828FB94
X-Postfix-Sender: rfc822; 210208@kdc.abcs.co.nz
Arrival-Date: Sun, 20 Jun 2021 22:10:43 +1200 (NZST)

Final-Recipient: rfc822; ean.dawson@gjgardier.co.nz
Original-Recipient: rfc822;ean.dawson@gjgardier.co.nz
Action: failed
Status: 5.4.4
Diagnostic-Code: X-Postfix; Host or domain name not found. Name service error
for namegardier.co.nz type=A: Host not foundReturn-Path: <210208@kdc.abcs.co.nz>

Content-Type: text/plain; charset="iso-8859-1"
Content-Transfer-Encoding: 8bit

I contacted Hawthorne Geddes on Friday. The geotechnical report was prepared for the subdivision resource consent rather than specifically for this site. They cannot provide advice on a specific building consent without being

engaged to do so. After the discussion with Hawthorne Geddes, the best way forward is to obtain advice on the issue from a Chartered Geotechnical engineer as they are competent to do so. We will also include a building platform construction review and PS4 from a Chartered Geotechnical engineer as a condition of the consent.

Regards

Cathy
Specialist Input CPEng
Kaipara District Council
Unit 6 - The Hub, 6 Molesworth Drive, Mangawhai 0505
P: (09) 439 3123 | E: buildingsupport@kaipara.govt.nz | W: www.kaipara.govt.nz

From: Ean Dawson
Sent: Thursday, 17 June 2021 10:37 AM
To: Catherine Thomas
Cc: Michael Sudfelt ; Julieanne Mollet ; Building Support
Subject: Re: 390076 Edge - BC210208 -- Lot 8, Sampsons Way Dargaville 0310

CAUTION: This email originated from outside Kaipara District Council. Do not click links or open attachments unless you recognise the sender and know the content is safe.

Kia ora Catherine,

After our discussions you had made it clear that you were going to talk to RSeng and/or Hawthorn Geddes on this matter, and as previously stated if there is an issue on just this property there are another 5 houses that has been constructed with no concerns made at BC processing stage. I don't think a 3 week response period is a valid solution to get the best result for the client.

Does KDC engage a peer reviewer who is suitably qualified in the field of Civil/Geotech engineering who can say that this design is appropriate?

Ng? mihi nui,
Ean Dawson

Contracts Manager | Sudfelt Construction Ltd - Whangarei / Kaipara Franchisee for G.J. Gardner Homes
Ph: (09) 437 5666 | Web: www.gjgardner.co.nz
[http://www.gjgardner.co.nz/assets/Uploads/Facebook.jpg] [http://www.gjgardner.co.nz/assets/Uploads/Pinterest.jpg] [https://www.gjgardner.co.nz/assets/Uploads/Insta8.jpg]

[http://www.gjgardner.co.nz/assets/Uploads/GJGardner.jpg]

This email, including attachments, may contain information which is confidential or subject to legal privilege or copyright. If you are not the intended recipient, please notify us immediately and then please delete all copies of this email from your system. You must not use, disseminate, distribute or reproduce this email, any attachments, or any

part thereof if you are not the intended recipient.

Email communications are not secure and are not guaranteed by us to be free of unauthorised interference, error or virus. Anyone who communicates with us by email is taken to accept this risk. To the maximum extent permitted by law we are not liable for any virus or other defect in this email or in any attachment (or for any unauthorized changes made to or other interference with this email or to any attachment).

Please note that this communication does not designate an information system for the purposes of the Electronic Transactions Act 2002.

On Thu, 17 Jun 2021 at 09:04, Catherine Thomas wrote:
Hello Ean, I have elaborated on my concerns regarding the high water table and another RFI letter will be sent. RSEng either need to provide more detailed information demonstrating that the drainage system they propose is adequate or consider a piled waffle raft system to prevent potential future settlement. There could be additional consents for other similar houses on this subdivision so it is important that any risk is mitigated.

Regards
Cathy

On Tue, Jun 15, 2021 at 12:13 PM Ean Dawson wrote:
Tena koe Cathy,

Thank you receiving my call earlier today.

As discussed could you please follow up with RSEng/Cook Costello regarding how the subsoil reduces pressure/settlement on the raft slab.

As I mentioned that the two engineers are competing for the same work so I would imagine that CC would oblige giving you your required information to satisfy the RFI.

If we could move on this as soon as possible it would be much appreciated.

Ng? mihi nui,
Ean Dawson

Contracts Manager | Sudfelt Construction Ltd - Whangarei / Kaipara Franchisee for G.J. Gardner Homes
Ph: (09) 437 5666 | Web: www.gjgardner.co.nz
[http://www.gjgardner.co.nz/assets/Uploads/Facebook.jpg] [http://www.gjgardner.co.nz/assets/Uploads/Pinterest.jpg] [https://www.gjgardner.co.nz/assets/Uploads/Insta8.jpg]

[http://www.gjgardner.co.nz/assets/Uploads/GJGardner.jpg]

This email, including attachments, may contain information which is confidential or subject to legal privilege or copyright. If you are not the intended recipient, please notify us immediately and then please delete all copies of this

email from your system. You must not use, disseminate, distribute or reproduce this email, any attachments, or any part thereof if you are not the intended recipient.

Email communications are not secure and are not guaranteed by us to be free of unauthorised interference, error or virus. Anyone who communicates with us by email is taken to accept this risk. To the maximum extent permitted by law we are not liable for any virus or other defect in this email or in any attachment (or for any unauthorized changes made to or other interference with this email or to any attachment).

Please note that this communication does not designate an information system for the purposes of the Electronic Transactions Act 2002.

---------- Forwarded message ---------
From: Julieanne Mollet
Date: Tue, 15 Jun 2021 at 11:49
Subject: Fwd: 390076 Edge - BC210208 -- Lot 8, Sampsons Way Dargaville 0310
To: Ean Dawson

Regards
Julieanne Mollet

Administrator | Sudfelt Construction Ltd - Whangarei / Kaipara Franchisee for G.J. Gardner Homes
Ph: (09) 437 5666 | Web: www.gjgardner.co.nz
[http://www.gjgardner.co.nz/assets/Uploads/Facebook.jpg] [http://www.gjgardner.co.nz/assets/Uploads/Pinterest.jpg] [https://www.gjgardner.co.nz/assets/Uploads/Insta8.jpg]

[http://www.gjgardner.co.nz/assets/Uploads/GJGardner.jpg]

This email, including attachments, may contain information which is confidential or subject to legal privilege or copyright. If you are not the intended recipient, please notify us immediately and then please delete all copies of this email from your system. You must not use, disseminate, distribute or reproduce this email, any attachments, or any part thereof if you are not the intended recipient.

Email communications are not secure and are not guaranteed by us to be free of unauthorised interference, error or virus. Anyone who communicates with us by email is taken to accept this risk. To the maximum extent permitted by law we are not liable for any virus or other defect in this email or in any attachment (or for any unauthorized changes made to or other interference with this email or to any attachment).

Please note that this communication does not designate an information system for the purposes of the Electronic Transactions Act 2002

---------- Forwarded message ---------
From: Julieanne Mollet
Date: Fri, 11 Jun 2021 at 15:47
Subject: 390076 Edge - BC210208 -- Lot 8, Sampsons Way Dargaville 0310

To: ,

Hi Cathy/Sharon

Can I please get an update on the RFI response for BC 210208 as per the below response we provided on 28 May.

RFI 1: Structural engineer review: The Hawthorn Geddes geotechnical report states that a waffle foundation slab is not suitable for this site due to ground water encountered at less than 0.6m below ground surface. Please confirm your drainage proposal with the Hawthorn Geddes geotechnical engineer. Provide confirmation that the drainage system proposed would be effective in mitigating the issue with high water table.

RFI 2: A response was received 3 May, which was confirmation of RS Eng design. Comment from Hawthorn Geddes geotechnical engineer is required to confirm that this design is sufficient.

RFI 4: We are still waiting a response to this RFI item.

Response provided:

The following is what RS Eng responded with:
Noted that the subdivision report outlines that a waffle foundation slab was not suitable due to elevated groundwater. RS Eng has addressed this issue by installing a drain on top of the hard pan, around the hardfill to remove groundwater from the building area, refer page 3 of calculations. This has been installed on a number of other properties in the area and along with keeping the dwelling elevated has worked effectively. It is not appropriate for Hawthorn Geddes to comment on RS Eng design approach for the dwelling.

28 May 2021 9:52 am

Thanks

Regards
Julieanne Mollet

Administrator | Sudfelt Construction Ltd - Whangarei / Kaipara Franchisee for G.J. Gardner Homes
Ph: (09) 437 5666 | Web: www.gjgardner.co.nz
[http://www.gjgardner.co.nz/assets/Uploads/Facebook.jpg] [http://www.gjgardner.co.nz/assets/Uploads/Pinterest.jpg] [https://www.gjgardner.co.nz/assets/Uploads/Insta8.jpg]

[http://www.gjgardner.co.nz/assets/Uploads/GJGardner.jpg]

This email, including attachments, may contain information which is confidential or subject to legal privilege or copyright. If you are not the intended recipient, please notify us immediately and then please delete all copies of this email from your system. You must not use, disseminate, distribute or reproduce this email, any attachments, or any part thereof if you are not the intended recipient.

Email communications are not secure and are not guaranteed by us to be free of unauthorised interference, error or virus. Anyone who communicates with us by email is taken to accept this risk. To the maximum extent permitted by law we are not liable for any virus or other defect in this email or in any attachment (or for any unauthorized changes made to or other interference with this email or to any attachment).

Please note that this communication does not designate an information system for the purposes of the Electronic Transactions Act 2002

DISCLAIMERThis message is for the designated recipient(s) only, and may contain confidential and/or privileged information. If you have received it in error, please delete it and advise the sender immediately. You should not copy or use it for any other purpose, nor disclose its contents to any other person.Designated Recipient(s): ean.dawson@gjgardier.co.nz, sharon.campbell@complynz.co.nzSent From: AlphaOne Building Consent SystemSent Date: 20 June 2021 22:10:43 pm - Sunday

--I contacted Hawthorne Geddes on Friday. The geotechnical report was prepared for the subdivision resource consent rather than specifically for this site. They cannot provide advice on a specific building consent without being engaged to do so. After the discussion with Hawthorne Geddes, the best way forward is to obtain advice on the issue from a Chartered Geotechnical engineer as they are competent to do so. We will also include a building platform construction review and PS4 from a Chartered Geotechnical engineer as a condition of the consent.

Regards

Cathy
Specialist Input CPEng
Kaipara District Council
Unit 6 - The Hub, 6 Molesworth Drive, Mangawhai 0505
P: (09) 439 3123 | E: buildingsupport@kaipara.govt.nz | W: www.kaipara.govt.nz

From: Ean Dawson
Sent: Thursday, 17 June 2021 10:37 AM
To: Catherine Thomas
Cc: Michael Sudfelt ; Julieanne Mollet ; Building Support
Subject: Re: 390076 Edge - BC210208 a?? Lot 8, Sampsons Way Dargaville 0310

CAUTION: This email originated from outside Kaipara District Council. Do not click links or open attachments unless you recognise the sender and know the content is safe.

Kia ora Catherine,

After our discussions you had made it clear that you were going to talk to RSeng and/or Hawthorn Geddes on this matter, and as previously stated if there is an issue on just this property there are another 5 houses that has been constructed with no concerns made at BC processing stage. I don't think a 3 week response period is a valid solution to get the best result for the client.

Does KDC engage a peer reviewer who is suitably qualified in the field of Civil/Geotech engineering who can say that this design is appropriate?

Ng? mihi nui,
Ean Dawson

Contracts Manager | Sudfelt Construction Ltd - Whangarei / Kaipara Franchisee for G.J. Gardner Homes
Ph: (09) 437 5666 | Web: www.gjgardner.co.nz
[http://www.gjgardner.co.nz/assets/Uploads/Facebook.jpg] [http://www.gjgardner.co.nz/assets/Uploads/Pinterest.jpg] [https://www.gjgardner.co.nz/assets/Uploads/Insta8.jpg]

[http://www.gjgardner.co.nz/assets/Uploads/GJGardner.jpg]

This email, including attachments, may contain information which is confidential or subject to legal privilege or copyright. If you are not the intended recipient, please notify us immediately and then please delete all copies of this email from your system. You must not use, disseminate, distribute or reproduce this email, any attachments, or any part thereof if you are not the intended recipient.

Email communications are not secure and are not guaranteed by us to be free of unauthorised interference, error or virus. Anyone who communicates with us by email is taken to accept this risk. To the maximum extent permitted by law we are not liable for any virus or other defect in this email or in any attachment (or for any unauthorized changes made to or other interference with this email or to any attachment).

Please note that this communication does not designate an information system for the purposes of the Electronic Transactions Act 2002.

On Thu, 17 Jun 2021 at 09:04, Catherine Thomas wrote:
Hello Ean, I have elaborated on my concerns regarding the high water table and another RFI letter will be sent. RSEng either need to provide more detailed information demonstrating that the drainage system they propose is adequate or consider a piled waffle raft system to prevent potential future settlement. There could be additional consents for other similar houses on this subdivision so it is important that any risk is mitigated.

Regards
Cathy

On Tue, Jun 15, 2021 at 12:13 PM Ean Dawson wrote:
Tena koe Cathy,

Thank you receiving my call earlier today.

As discussed could you please follow up with RSEng/Cook Costello regarding how the subsoil reduces pressure/settlement on the raft slab.

As I mentioned that the two engineers are competing for the same work so I would imagine that CC would oblige giving you your required information to satisfy the RFI.

If we could move on this as soon as possible it would be much appreciated.

Ng? mihi nui,
Ean Dawson

Contracts Manager | Sudfelt Construction Ltd - Whangarei / Kaipara Franchisee for G.J. Gardner Homes
Ph: (09) 437 5666 | Web: www.gjgardner.co.nz
[http://www.gjgardner.co.nz/assets/Uploads/Facebook.jpg] [http://www.gjgardner.co.nz/assets/Uploads/Pinterest.jpg] [https://www.gjgardner.co.nz/assets/Uploads/Insta8.jpg]

[http://www.gjgardner.co.nz/assets/Uploads/GJGardner.jpg]

This email, including attachments, may contain information which is confidential or subject to legal privilege or copyright. If you are not the intended recipient, please notify us immediately and then please delete all copies of this email from your system. You must not use, disseminate, distribute or reproduce this email, any attachments, or any part thereof if you are not the intended recipient.

Email communications are not secure and are not guaranteed by us to be free of unauthorised interference, error or virus. Anyone who communicates with us by email is taken to accept this risk. To the maximum extent permitted by law we are not liable for any virus or other defect in this email or in any attachment (or for any unauthorized changes made to or other interference with this email or to any attachment).

Please note that this communication does not designate an information system for the purposes of the Electronic Transactions Act 2002.

---------- Forwarded message ---------
From: Julieanne Mollet
Date: Tue, 15 Jun 2021 at 11:49
Subject: Fwd: 390076 Edge - BC210208 a?? Lot 8, Sampsons Way Dargaville 0310
To: Ean Dawson

Regards
Julieanne Mollet

Administrator | Sudfelt Construction Ltd a?? Whangarei / Kaipara Franchisee for G.J. Gardner Homes
Ph: (09) 437 5666 | Web: www.gjgardner.co.nz
[http://www.gjgardner.co.nz/assets/Uploads/Facebook.jpg] [http://www.gjgardner.co.nz/assets/Uploads/Pinterest.jpg] [https://www.gjgardner.co.nz/assets/Uploads/Insta8.jpg]

[http://www.gjgardner.co.nz/assets/Uploads/GJGardner.jpg]

This email, including attachments, may contain information which is confidential or subject to legal privilege or copyright. If you are not the intended recipient, please notify us immediately and then please delete all copies of this email from your system. You must not use, disseminate, distribute or reproduce this email, any attachments, or any part thereof if you are not the intended recipient.

Email communications are not secure and are not guaranteed by us to be free of unauthorised interference, error or virus. Anyone who communicates with us by email is taken to accept this risk. To the maximum extent permitted by law we are not liable for any virus or other defect in this email or in any attachment (or for any unauthorized changes made to or other interference with this email or to any attachment).

Please note that this communication does not designate an information system for the purposes of the Electronic Transactions Act 2002

---------- Forwarded message ---------
From: Julieanne Mollet
Date: Fri, 11 Jun 2021 at 15:47
Subject: 390076 Edge - BC210208 a?? Lot 8, Sampsons Way Dargaville 0310
To: ,

Hi Cathy/Sharon

Can I please get an update on the RFI response for BC 210208 as per the below response we provided on 28 May.

RFI 1: Structural engineer review: The Hawthorn Geddes geotechnical report states that a waffle foundation slab is not suitable for this site due to ground water encountered at less than 0.6m below ground surface. Please confirm your drainage proposal with the Hawthorn Geddes geotechnical engineer. Provide confirmation that the drainage system proposed would be effective in mitigating the issue with high water table.

RFI 2: A response was received 3 May, which was confirmation of RS Eng design. Comment from Hawthorn Geddes geotechnical engineer is required to confirm that this design is sufficient.

RFI 4: We are still waiting a response to this RFI item.

Response provided:

The following is what RS Eng responded with:
Noted that the subdivision report outlines that a waffle foundation slab was not suitable due to elevated groundwater. RS Eng has addressed this issue by installing a drain on top of the hard pan, around the hardfill to remove groundwater from the building area, refer page 3 of calculations. This has been installed on a number of other properties in the area and along with keeping the dwelling elevated has worked effectively. It is not appropriate for Hawthorn Geddes to comment on RS Eng design approach for the dwelling.

28 May 2021 9:52 am

Thanks

Regards
Julieanne Mollet

Administrator | Sudfelt Construction Ltd a?? Whangarei / Kaipara Franchisee for G.J. Gardner Homes
Ph: (09) 437 5666 | Web: www.gjgardner.co.nz
[http://www.gjgardner.co.nz/assets/Uploads/Facebook.jpg] [http://www.gjgardner.co.nz/assets/Uploads/Pinterest.jpg] [https://www.gjgardner.co.nz/assets/Uploads/Insta8.jpg]

[http://www.gjgardner.co.nz/assets/Uploads/GJGardner.jpg]

This email, including attachments, may contain information which is confidential or subject to legal privilege or copyright. If you are not the intended recipient, please notify us immediately and then please delete all copies of this email from your system. You must not use, disseminate, distribute or reproduce this email, any attachments, or any part thereof if you are not the intended recipient.

Email communications are not secure and are not guaranteed by us to be free of unauthorised interference, error or virus. Anyone who communicates with us by email is taken to accept this risk. To the maximum extent permitted by law we are not liable for any virus or other defect in this email or in any attachment (or for any unauthorized changes made to or other interference with this email or to any attachment).

Please note that this communication does not designate an information system for the purposes of the Electronic Transactions Act 2002

DISCLAIMERThis message is for the designated recipient(s) only, and may contain confidential and/or privileged information. If you have received it in error, please delete it and advise the sender immediately. You should not copy or use it for any other purpose, nor disclose its contents to any other person.Designated Recipient(s): ean.dawson@gjgardier.co.nz, sharon.campbell@complynz.co.nzSent From: AlphaOne Building Consent SystemSent Date: 20 June 2021 22:10:43 pm - Sunday

Email #49676: BC210208

Project ID: 210208
Date Received: 2021-06-23 11:30:07
Sender: ean.dawson@gjgardner.co.nz
Checked By: Sharon Campbell
Accepted By: Sharon Campbell
Subject:
Information Received Via Email: Re: BC210208: 8 Sampsons Way Dargaville
Message:
Kia ora Cathy,

Thank you for the update. I will inform RSeng on what the recommendations are.

*Ng**? mihi nui,*
Ean Dawson

Contracts Manager | Sudfelt Construction Ltd -
Whangarei / Kaipara Franchisee for G.J. Gardner Homes
Ph: (09) 437 5666 <+6494375666> | Web: www.gjgardner.co.nz

[image: http://www.gjgardner.co.nz/assets/Uploads/Facebook.jpg] <https://www.facebook.com/GJGardnerHomesNewZealand> [image: http://www.gjgardner.co.nz/assets/Uploads/Pinterest.jpg] <http://www.pinterest.com/GJGardnerNZ/> [image: https://www.gjgardner.co.nz/assets/Uploads/Insta8.jpg] <https://www.instagram.com/gjgardnerhomesnz/?hl>

[image: http://www.gjgardner.co.nz/assets/Uploads/GJGardner.jpg] <http://www.gjgardner.co.nz/>

This email, including attachments, may contain information which is confidential or subject to legal privilege or copyright. If you are not the intended recipient, please notify us immediately and then please delete all copies of this email from your system. You must not use, disseminate, distribute or reproduce this email, any attachments, or any part thereof if you are not the intended recipient.

Email communications are not secure and are not guaranteed by us to be free of unauthorised interference, error or virus. Anyone who communicates with us by email is taken to accept this risk. To the maximum extent permitted

by law we are not liable for any virus or other defect in this email or in any attachment (or for any unauthorized changes made to or other interference with this email or to any attachment).

Please note that this communication does not designate an information system for the purposes of the Electronic Transactions Act 2002.

On Tue, 22 Jun 2021 at 20:34, Kaipara District Council <210208@kdc.abcs.co.nz> wrote:

> I contacted Hawthorne Geddes on Friday. The geotechnical report was
> prepared for the subdivision resource consent rather than specifically for
> this site. They cannot provide advice on a specific building consent
> without being engaged to do so. After the discussion with Hawthorne Geddes,
> the best way forward is to obtain advice on the issue from a Chartered
> Geotechnical engineer as they are competent to do so. We will also include
> a building platform construction review and PS4 from a Chartered
> Geotechnical engineer as a condition of the consent.
>
> Apologies, I first sent this email on Sunday but had entered your email
> address incorrectly.
>
> Regards
>
> Cathy
>
>
>
> Cathy
> Specialist Input CPEng
> Kaipara District Council
> Unit 6 - The Hub, 6 Molesworth Drive, Mangawhai 0505
> P: (09) 439 3123 | E: buildingsupport@kaipara.govt.nz | W:
> www.kaipara.govt.nz
> ------------------------------
>
> ------------------------------
> *DISCLAIMER*
> This message is for the designated recipient(s) only, and may contain
> confidential and/or privileged information. If you have received it in
> error, please delete it and advise the sender immediately. You should not
> copy or use it for any other purpose, nor disclose its contents to any
> other person.
>

> Designated Recipient(s): ean.dawson@gjgardner.co.nz,

> sharon.campbell@complynz.co.nz

> Sent From: AlphaOne Building Consent System

> Sent Date: 22 June 2021 20:34:41 pm - Tuesday

Email #49730: BC210208

Project ID: 210208
Date Received: 2021-06-24 15:40:02
Sender: buildingsupport@kaipara.govt.nz
Checked By: Sharon Campbell
Accepted By: Sharon Campbell
Subject:
Information Received Via Email: ATTN CATHY THOMAS, SHARON CAMPBELL FW: RS17644 - Foundation Design 8 Sampsons Way, Dargaville
Message:

From: Ean Dawson <ean.dawson@gjgardner.co.nz>
Sent: Thursday, 24 June 2021 3:13 PM
To: Catherine Thomas <cathytengineer@gmail.com>; sharon.campbell@complynz.co.nz
Cc: Building Support <buildingsupport@kaipara.govt.nz>; Aaron Brown <aaron.brown@kaipara.govt.nz>; Michael Sudfelt <michael.sudfelt@gjgardner.co.nz>; Julieanne Mollet <julieanne.mollet@gjgardner.co.nz>; Lloyd Patrick <lloyd@rseng.co.nz>; steve@rseng.co.nz
Subject: Fwd: RS17644 - Foundation Design 8 Sampsons Way, Dargaville

CAUTION: This email originated from outside Kaipara District Council. Do not click links or open attachments unless you recognise the sender and know the content is safe.

Tena koe Cathy,

Thanks for receiving my call earlier.

Please find following the recommendations and design philosophy for 8 Sampsons Way in Dargaville.

Let me know if this satisfies your requirements.

Ng? mihi nui,
Ean Dawson

Contracts Manager | Sudfelt Construction Ltd - Whangarei / Kaipara Franchisee for G.J. Gardner Homes
Ph: (09) 437 5666<tel:+6494375666> | Web: www.gjgardner.co.nz<http://www.gjgardner.co.nz/>
[http://www.gjgardner.co.nz/assets/Uploads/Facebook.jpg]<https://www.facebook.com/GJGardnerHomesNewZealand> [http://www.gjgardner.co.nz/assets/Uploads/Pinterest.jpg] <http://www.pinterest.com/GJGardnerNZ/>
[https://www.gjgardner.co.nz/assets/Uploads/Insta8.jpg] <https://www.instagram.com/gjgardnerhomesnz/?hl>

[http://www.gjgardner.co.nz/assets/Uploads/GJGardner.jpg]<http://www.gjgardner.co.nz/>

This email, including attachments, may contain information which is confidential or subject to legal privilege or copyright. If you are not the intended recipient, please notify us immediately and then please delete all copies of this email from your system. You must not use, disseminate, distribute or reproduce this email, any attachments, or any part thereof if you are not the intended recipient.

Email communications are not secure and are not guaranteed by us to be free of unauthorised interference, error or virus. Anyone who communicates with us by email is taken to accept this risk. To the maximum extent permitted by law we are not liable for any virus or other defect in this email or in any attachment (or for any unauthorized changes made to or other interference with this email or to any attachment).

Please note that this communication does not designate an information system for the purposes of the Electronic Transactions Act 2002.

---------- Forwarded message ---------
From: Matthew Hargood <matthewh@rseng.co.nz<mailto:matthewh@rseng.co.nz>>
Date: Thu, 24 Jun 2021 at 14:20
Subject: RS17644 - Foundation Design 8 Sampsons Way, Dargaville
To: ean.dawson@gjgardner.co.nz<mailto:ean.dawson@gjgardner.co.nz>
<ean.dawson@gjgardner.co.nz<mailto:ean.dawson@gjgardner.co.nz>>
Cc: Steve Turner <steve@rseng.co.nz<mailto:steve@rseng.co.nz>>, Michael Sudfelt
<michael.sudfelt@gjgardner.co.nz<mailto:michael.sudfelt@gjgardner.co.nz>>

Hi Ean,

Following on from councils email this week we have approached Firth to enquire why the groundwater separation requirement for a standard RibRaft. This concluded that a standard RibRaft is suitable to place directly on clay however if groundwater is elevated specific design is required. RS Eng has carried out a specific foundation design and provided development recommendations for the site to accommodate the elevated groundwater level, attached.

A specifically designed waffle raft foundation system in accordance with AS2870:2011 "Residential slabs and footings" has been specified. This design has conservatively accounted for moderately expansive soils to provide a stiffer solution. To mitigate the risk of groundwater rising we have adopted a capillary break beneath the slab including a DPM and 150min compacted granular fill to align with the specification of NZS3604:2011; Section 7.5.3. This design is specific and therefore not in accordance with the Firth RibRaft manual and their recommendations are not applicable.

To further limit groundwater levels rising, we have also recommended a subsoil ring drain around the dwelling, placed on the 'hard pan'. This along with the proposed site filling will limit the groundwater levels coming up to the underside of the foundation.

Please refer to the attached calculations and details. The existing approved plans are suitable subject to updating the specification for the hardfill and amending the subsoil drain.

We have also attached our directors CPEng practice area description to satisfy your requirement that he is suitably qualified in undertaking a geotechnical assessments.

Regards,

Lloyd Patrick
Engineer
BE(Hons)(Construction)
RS Eng Ltd
09 438 3273

www.RSEng.co.nz<http://www.rseng.co.nz/>
2 Seaview Road,
Whangarei 0110
[cid:17a3bfe51e95b16b21]

Notice of Confidentiality: This transmission contains information that may be confidential and that may also be privileged. Unless you are the intended recipient of this message (or authorised to receive it for the intended recipient) you may not copy, forward, or otherwise use it, or disclose its contents to anyone else. If you have received this transmission in error, please notify us immediately and delete it from your system.

REJECTED ATTACHMENT(S):
Note: The listed file(s) below were rejected because they were not in PDF format.
- image002.png
- image001.png

ATTACHMENTS:

- 17644 Edge Randell Foundation Design 2021-06-23.pdf

- 87465 - Steve Turner 2021.pdf

Email #49802: BC210208

Project ID: 210208
Date Received: 2021-06-28 15:15:02
Sender: knewman@kaipara.govt.nz
Checked By: Sharon Campbell
Accepted By: Sharon Campbell
Subject:
Information Received Via Email: RE: BC210208: 8 Sampsons Way Dargaville
Message:
Hi Sharon,

That is a very smart idea. Message me when the docs are up in that folder and I will look through and see if they were the correct ones I have approved.

If they are not I will upload the ones I have used.

Ng? mihi nui,

Kelsey

[KDC Logo test June 2015]
Kelsey Newman | Graduate Planner
Kaipara District Council, Private Bag 1001, Dargaville 0340
Freephone: 0800 727 059 | DDI: 09 439 3123 | Cell: 021 391 351
knewman@kaipara.govt.nz<mailto:knewman@kaipara.govt.nz> | council@kaipara.govt.nz | www.kaipara.govt.nz

From: Kaipara District Council <210208@kdc.abcs.co.nz>
Sent: Monday, 28 June 2021 11:42 am
To: Kelsey Newman <knewman@kaipara.govt.nz>
Cc: allocations@complynz.co.nz
Subject: BC210208: 8 Sampsons Way Dargaville

CAUTION: This email originated from outside Kaipara District Council. Do not click links or open attachments unless you recognise the sender and know the content is safe.

Good morning Kelsey,

I am ready to do the completion on this consent, but as there have been several site plan revisions I wanted to make sure I have the correct site plan.

If I put a copy of the Approved Plans that I have into the working folder, can you please confirm this is the latest site

plan that planning has signed off?
Or alternatively send me a copy of what you have signed off.

Thanks Kelsey.

Note: If you are the wrong person for this request, can you please forward to the right person.

Many thanks,

Sharon Campbell
Contractor
Kaipara District Council
Unit 6 - The Hub, 6 Molesworth Drive, Mangawhai 0505
P: (09) 439 3123 | E: buildingsupport@kaipara.govt.nz<mailto:buildingsupport@kaipara.govt.nz> | W: www.kaipara.govt.nz<http://www.kaipara.govt.nz>

_____

_____

DISCLAIMER
This message is for the designated recipient(s) only, and may contain confidential and/or privileged information. If you have received it in error, please delete it and advise the sender immediately. You should not copy or use it for any other purpose, nor disclose its contents to any other person.

Designated Recipient(s): knewman@kaipara.govt.nz<mailto:knewman@kaipara.govt.nz>, allocations@complynz.co.nz<mailto:allocations@complynz.co.nz>
Sent From: AlphaOne Building Consent System
Sent Date: 28 June 2021 11:41:38 am - Monday

REJECTED ATTACHMENT(S):
Note: The listed file(s) below were rejected because they were not in PDF format.
- image001.jpg

Email #49850: BC210208

Project ID: 210208
Date Received: 2021-06-29 16:10:07
Sender: knewman@kaipara.govt.nz
Checked By: Sharon Campbell
Accepted By: Sharon Campbell
Subject:
Information Received Via Email: RE: BC210208: 8 Sampsons Way Dargaville
Message:
Hiya Sharon,

I just had a wee look and they look good however the site plan is not the plan I have approved. Please see the site plan I have uploaded into that file.

Any questions please do let me know.

Ng? mihi nui,

Kelsey

[KDC Logo test June 2015]
Kelsey Newman | Graduate Planner
Kaipara District Council, Private Bag 1001, Dargaville 0340
Freephone: 0800 727 059 | DDI: 09 439 3123 | Cell: 021 391 351
knewman@kaipara.govt.nz<mailto:knewman@kaipara.govt.nz> | council@kaipara.govt.nz | www.kaipara.govt.nz

From: Kaipara District Council <210208@kdc.abcs.co.nz>
Sent: Tuesday, 29 June 2021 3:59 pm
To: Kelsey Newman <knewman@kaipara.govt.nz>
Cc: allocations@complynz.co.nz
Subject: BC210208: 8 Sampsons Way Dargaville

CAUTION: This email originated from outside Kaipara District Council. Do not click links or open attachments unless you recognise the sender and know the content is safe.

Hi Kelsey,

The plans I have are in the working folder under application processing and are called Approved Plans.

If you could take a look and make sure we have the same ones.

Many thanks,

Sharon Campbell
Contractor
Kaipara District Council
Unit 6 - The Hub, 6 Molesworth Drive, Mangawhai 0505
P: (09) 439 3123 | E: buildingsupport@kaipara.govt.nz<mailto:buildingsupport@kaipara.govt.nz> | W: www.kaipara.govt.nz<http://www.kaipara.govt.nz>

==========

Hi Sharon,

That is a very smart idea. Message me when the docs are up in that folder and I will look through and see if they were the correct ones I have approved.

If they are not I will upload the ones I have used.

Ng? mihi nui,

Kelsey

[KDC Logo test June 2015]
Kelsey Newman | Graduate Planner
Kaipara District Council, Private Bag 1001, Dargaville 0340
Freephone: 0800 727 059 | DDI: 09 439 3123 | Cell: 021 391 351
knewman@kaipara.govt.nz<mailto:knewman@kaipara.govt.nz> |
council@kaipara.govt.nz<mailto:council@kaipara.govt.nz> | www.kaipara.govt.nz<http://www.kaipara.govt.nz>

From: Kaipara District Council
Sent: Monday, 28 June 2021 11:42 am
To: Kelsey Newman
Cc: allocations@complynz.co.nz<mailto:allocations@complynz.co.nz>
Subject: BC210208: 8 Sampsons Way Dargaville

CAUTION: This email originated from outside Kaipara District Council. Do not click links or open attachments unless you recognise the sender and know the content is safe.

Good morning Kelsey,

I am ready to do the completion on this consent, but as there have been several site plan revisions I wanted to make sure I have the correct site plan.

If I put a copy of the Approved Plans that I have into the working folder, can you please confirm this is the latest site plan that planning has signed off?

Or alternatively send me a copy of what you have signed off.

Thanks Kelsey.

Note: If you are the wrong person for this request, can you please forward to the right person.

Many thanks,

Sharon Campbell
Contractor
Kaipara District Council
Unit 6 - The Hub, 6 Molesworth Drive, Mangawhai 0505
P: (09) 439 3123 | E: buildingsupport@kaipara.govt.nz<mailto:buildingsupport@kaipara.govt.nz> | W: www.kaipara.govt.nz<http://www.kaipara.govt.nz>

_____

_____

DISCLAIMER
This message is for the designated recipient(s) only, and may contain confidential and/or privileged information. If you have received it in error, please delete it and advise the sender immediately. You should not copy or use it for any other purpose, nor disclose its contents to any other person.

Designated Recipient(s): knewman@kaipara.govt.nz<mailto:knewman@kaipara.govt.nz>, allocations@complynz.co.nz<mailto:allocations@complynz.co.nz>
Sent From: AlphaOne Building Consent System
Sent Date: 28 June 2021 11:41:38 am - Monday

REJECTED ATTACHMENT(S):
Note: The listed file(s) below were rejected because they were not in PDF format.
- image001.jpg

_____

_____

DISCLAIMER
This message is for the designated recipient(s) only, and may contain confidential and/or privileged information. If you have received it in error, please delete it and advise the sender immediately. You should not copy or use it for any other purpose, nor disclose its contents to any other person.

Designated Recipient(s): knewman@kaipara.govt.nz<mailto:knewman@kaipara.govt.nz>, allocations@complynz.co.nz<mailto:allocations@complynz.co.nz>
Sent From: AlphaOne Building Consent System
Sent Date: 29 June 2021 15:59:10 pm - Tuesday

REJECTED ATTACHMENT(S):

Note: The listed file(s) below were rejected because they were not in PDF format.

- image001.jpg

Email #49890: BC210208

Project ID: 210208
Date Received: 2021-06-30 12:35:10
Sender: sharon.campbell@complynz.co.nz
Checked By: Sharon Campbell
Accepted By: Sharon Campbell
Subject:
Information Received Via Email: Fwd: FW: BC210208: 8 Sampsons Way Dargaville
Message:
With kind regards

*Sharon Campbell*Building Consent Processor - *ComplyNZ*

Unit 16
Level 2, Silverstream Retail Village
42 Silverstream Boulevard
P.O. Box 23, Woodend 7641

*P *03 310 0272

www.complynz.co.nz <http://www.complynz.co.nz/>

This email and any accompanying attachments may contain confidential and proprietary information. This information is private and protected by law and, accordingly, if you are not the intended recipient, you are requested to delete this entire communication immediately and are notified that any disclosure, copying or distribution of or taking any action based on this information is prohibited. If you have received the message in error, please notify the sender immediately by return email and delete the email.

ComplyNZ Ltd does not accept any liability or responsibility for any interception, corruption, destruction, loss, late arrival, or incompleteness, tampering or interference of any information contained in this email. Nor for its incorrect delivery or non-delivery for whatsoever reason or for its effect on any electronic device of the recipient.

If verification of this email or any attachment is required, please request a hard-copy version.

---------- Forwarded message ---------
From: Ean Dawson <ean.dawson@gjgardner.co.nz>

Date: Wed, 30 Jun 2021 at 12:27
Subject: Fwd: FW: BC210208: 8 Sampsons Way Dargaville
To: <sharon.campbell@complynz.co.nz>

Engineers requirements for inclusion with BC.

*Ng**? mihi nui,*
Ean Dawson

Contracts Manager | Sudfelt Construction Ltd -
Whangarei / Kaipara Franchisee for G.J. Gardner Homes
Ph: (09) 437 5666 <+6494375666> | Web: www.gjgardner.co.nz

[image: http://www.gjgardner.co.nz/assets/Uploads/Facebook.jpg]
<https://www.facebook.com/GJGardnerHomesNewZealand> [image:
http://www.gjgardner.co.nz/assets/Uploads/Pinterest.jpg]
<http://www.pinterest.com/GJGardnerNZ/> [image:
https://www.gjgardner.co.nz/assets/Uploads/Insta8.jpg]
<https://www.instagram.com/gjgardnerhomesnz/?hl>

[image: http://www.gjgardner.co.nz/assets/Uploads/GJGardner.jpg]
<http://www.gjgardner.co.nz/>

This email, including attachments, may contain information which is confidential or subject to legal privilege or copyright. If you are not the intended recipient, please notify us immediately and then please delete all copies of this email from your system. You must not use, disseminate, distribute or reproduce this email, any attachments, or any part thereof if you are not the intended recipient.

Email communications are not secure and are not guaranteed by us to be free of unauthorised interference, error or virus. Anyone who communicates with us by email is taken to accept this risk. To the maximum extent permitted by law we are not liable for any virus or other defect in this email or in any attachment (or for any unauthorized changes made to or other interference with this email or to any attachment).

Please note that this communication does not designate an information system for the purposes of the Electronic Transactions Act 2002.

---------- Forwarded message ---------
From: Lloyd Patrick <lloyd@rseng.co.nz>
Date: Wed, 30 Jun 2021 at 09:08
Subject: FW: BC210208: 8 Sampsons Way Dargaville

To: Ean Dawson <ean.dawson@gjgardner.co.nz>
Cc: Michael Sudfelt <michael.sudfelt@gjgardner.co.nz>, Iain Mackay <iain@rseng.co.nz>

Morning Ean,

KDC are after a revised site plan (See below email).

I have attached our mark up. Let me know if you need any further info.

Regards,

Lloyd Patrick

Engineer

BE(Hons)(Construction)

RS Eng Ltd

09 438 3273

www.RSEng.co.nz <http://www.rseng.co.nz/>

2 Seaview Road,

Whangarei 0110

Notice of Confidentiality: This transmission contains information that may be confidential and that may also be privileged. Unless you are the intended recipient of this message (or authorised to receive it for the intended recipient) you may not copy, forward, or otherwise use it, or disclose its contents to anyone else. If you have received this transmission in error, please notify us immediately and delete it from your system.

From: Steve Turner <steve@rseng.co.nz>
Sent: Wednesday, 30 June 2021 9:04 AM
To: Lloyd Patrick <lloyd@rseng.co.nz>
Subject: FW: BC210208: 8 Sampsons Way Dargaville

From: Kaipara District Council <210208@kdc.abcs.co.nz>
Sent: Wednesday, 30 June 2021 9:02 AM
To: Steve Turner <steve@rseng.co.nz>

Cc: allocations@complynz.co.nz
Subject: BC210208: 8 Sampsons Way Dargaville

Good morning,

In doing a final review to finalise and issue the Building Consent, it appears that I haven't received the final revised site plan that planning have approved.

Can you please forward a copy of the final site plan at your earliest convenience including the notations required for the Building consent. I will place this consent on hold until we have received the correct site plan.

Kind regards,

Sharon Campbell
Contractor 022 697 5120
Kaipara District Council
Unit 6 - The Hub, 6 Molesworth Drive, Mangawhai 0505
P: (09) 439 3123 | E: buildingsupport@kaipara.govt.nz | W: www.kaipara.govt.nz
---

DISCLAIMER
This message is for the designated recipient(s) only, and may contain confidential and/or privileged information. If you have received it in error, please delete it and advise the sender immediately. You should not copy or use it for any other purpose, nor disclose its contents to any other person.

Designated Recipient(s): steve@RSEng.co.nz, allocations@complynz.co.nz
Sent From: AlphaOne Building Consent System
Sent Date: 30 June 2021 09:02:08 am - Wednesday

REJECTED ATTACHMENT(S):
Note: The listed file(s) below were rejected because they were not in PDF format.
- image003.png
- image001.png

ATTACHMENTS:

- 17644 Edge Randell Foundation Design 2021-06-23.pdf

Email #49893: BC210208

Project ID: 210208
Date Received: 2021-06-30 13:10:02
Sender: sharon.campbell@complynz.co.nz
Checked By: Sharon Campbell
Accepted By: Sharon Campbell
Subject:
Information Received Via Email: Fwd: Edge Plumbing and Drainage
Message:
With kind regards

*Sharon Campbell*Building Consent Processor - *ComplyNZ*

Unit 16
Level 2, Silverstream Retail Village
42 Silverstream Boulevard
P.O. Box 23, Woodend 7641

*P *03 310 0272

www.complynz.co.nz <http://www.complynz.co.nz/>

This email and any accompanying attachments may contain confidential and proprietary information. This information is private and protected by law and, accordingly, if you are not the intended recipient, you are requested to delete this entire communication immediately and are notified that any disclosure, copying or distribution of or taking any action based on this information is prohibited. If you have received the message in error, please notify the sender immediately by return email and delete the email.

ComplyNZ Ltd does not accept any liability or responsibility for any interception, corruption, destruction, loss, late arrival, or incompleteness, tampering or interference of any information contained in this email. Nor for its incorrect delivery or non-delivery for whatsoever reason or for its effect on any electronic device of the recipient.

If verification of this email or any attachment is required, please request a hard-copy version.

---------- Forwarded message ---------
From: Ean Dawson <ean.dawson@gjgardner.co.nz>

Date: Wed, 30 Jun 2021 at 12:58
Subject: Edge Plumbing and Drainage
To: <sharon.campbell@complynz.co.nz>
Cc: Julieanne Mollet <julieanne.mollet@gjgardner.co.nz>

Kia ora Sharon,

Thank you for calling me earlier.

Please find attached revised sheet 06 with the subsoil ring drain to suit engineers requirements.

*Ng**? mihi nui,*
Ean Dawson

Contracts Manager | Sudfelt Construction Ltd -
Whangarei / Kaipara Franchisee for G.J. Gardner Homes
Ph: (09) 437 5666 <+6494375666> | Web: www.gjgardner.co.nz

[image: http://www.gjgardner.co.nz/assets/Uploads/Facebook.jpg] <https://www.facebook.com/GJGardnerHomesNewZealand> [image: http://www.gjgardner.co.nz/assets/Uploads/Pinterest.jpg] <http://www.pinterest.com/GJGardnerNZ/> [image: https://www.gjgardner.co.nz/assets/Uploads/Insta8.jpg] <https://www.instagram.com/gjgardnerhomesnz/?hl>

[image: http://www.gjgardner.co.nz/assets/Uploads/GJGardner.jpg] <http://www.gjgardner.co.nz/>

This email, including attachments, may contain information which is confidential or subject to legal privilege or copyright. If you are not the intended recipient, please notify us immediately and then please delete all copies of this email from your system. You must not use, disseminate, distribute or reproduce this email, any attachments, or any part thereof if you are not the intended recipient.

Email communications are not secure and are not guaranteed by us to be free of unauthorised interference, error or virus. Anyone who communicates with us by email is taken to accept this risk. To the maximum extent permitted by law we are not liable for any virus or other defect in this email or in any attachment (or for any unauthorized changes made to or other interference with this email or to any attachment).

Please note that this communication does not designate an information

system for the purposes of the Electronic Transactions Act 2002.

ATTACHMENTS:

- 390076 - EDGE - PLUMBING AND DRAINAGE 30-06-21.pdf

Email #49952: BC210208

Project ID: 210208
Date Received: 2021-07-01 21:15:07
Sender: cathytengineer@gmail.com
Checked By: Michelle Nepia
Accepted By: Sharon Campbell
Subject:
Information Received Via Email: Re: BC210208: 8 Sampsons Way Dargaville
Message:
Apologies for delay in response. I have added perimeter subsoil drain to construction monitoring and PS4 as critical to waffle slab design. Fine to issue building consent.

Thank you
Cathy

On Thu, Jul 1, 2021 at 6:17 PM Kaipara District Council <
210208@kdc.abcs.co.nz> wrote:

> Hi Cathy,
>
> I realise you're very busy, but I can't really hold this consent much
> longer and need to get it signed off.
>
> I'm fairly confident that I have the right drawings and calcs, but there
> is a possibility that the engineer sent you information and not me.
>
> Not sure what happens here, whether you send through?
>
> If you could please have a look at the approved final docs in the working
> folder to confirm I do have the latest information and the consent can be
> signed off.
>
> Many thanks,
>
>
> Sharon Campbell
> Contractor
> Kaipara District Council
> Unit 6 - The Hub, 6 Molesworth Drive, Mangawhai 0505
> P: (09) 439 3123 | E: buildingsupport@kaipara.govt.nz | W:

> www.kaipara.govt.nz
> ------------------------------
>
> ------------------------------
> *DISCLAIMER*
> This message is for the designated recipient(s) only, and may contain
> confidential and/or privileged information. If you have received it in
> error, please delete it and advise the sender immediately. You should not
> copy or use it for any other purpose, nor disclose its contents to any
> other person.
>
> Designated Recipient(s): cathytengineer@gmail.com,
> allocations@complynz.co.nz
> Sent From: AlphaOne Building Consent System
> Sent Date: 1 July 2021 18:17:32 pm - Thursday

Email #50089: BC210208

Project ID: 210208
Date Received: 2021-07-07 12:05:04
Sender: buildingsupport@kaipara.govt.nz
Checked By: Sharon Martin
Accepted By: Sharon Martin
Subject:
Information Received Via Email: FW: BC210208.1 Form 5: Building Consent - 8 Sampsons Way Dargaville
Message:
For filing, Please accept

[KDC Logo test June 2015]
Sharon Martin | Building Technical Support Officer
Kaipara te Oranganui | Kaipara District Council, Private Bag 1001, Dargaville 0340
Freephone: 0800 727 059 |
smartin@kaipara.govt.nz<mailto:smartin@kaipara.govt.nz> |
council@kaipara.govt.nz<mailto:council@kaipara.govt.nz> | www.kaipara.govt.nz<http://www.kaipara.govt.nz/>

From: Steve Turner <steve@rseng.co.nz>
Sent: Wednesday, 7 July 2021 8:59 AM
To: Building Support <buildingsupport@kaipara.govt.nz>
Cc: Michael Sudfelt <michael.sudfelt@gjgardner.co.nz>
Subject: FW: BC210208.1 Form 5: Building Consent - 8 Sampsons Way Dargaville

CAUTION: This email originated from outside Kaipara District Council. Do not click links or open attachments unless you recognise the sender and know the content is safe.

Hi Sharon,

Thanks for advice regarding this building consent. Please note however that GJ Gardner Homes is the agent and we are only the engineers on this job. Emails should be directed to GJs in the first instance and not us. Can you please update the contact details accordingly. I understand GJ's have previously made this same request.

Regards

Steve Turner
BE(Civil), CPEng, CMEngNZ, IntPE(NZ)
RS Eng Ltd
09 438 3273
027 284 9100
www.RSEng.co.nz<http://www.rseng.co.nz/>

2 Seaview Road,
Whangarei 0110
[cid:image004.png@01D77328.10C08EE0]

Notice of Confidentiality: This transmission contains information that may be confidential and that may also be privileged. Unless you are the intended recipient of this message (or authorised to receive it for the intended recipient) you may not copy, forward, or otherwise use it, or disclose its contents to anyone else. If you have received this transmission in error, please notify us immediately and delete it from your system.

From: Kaipara District Council <210208@kdc.abcs.co.nz<mailto:210208@kdc.abcs.co.nz>>
Sent: Friday, 2 July 2021 12:29 PM
To: Steve Turner <steve@rseng.co.nz<mailto:steve@rseng.co.nz>>
Cc: rachyledge@gmail.com<mailto:rachyledge@gmail.com>;
allocations@complynz.co.nz<mailto:allocations@complynz.co.nz>
Subject: BC210208.1 Form 5: Building Consent - 8 Sampsons Way Dargaville

Dear Sir/Madam,

Please see your attached Issued Building Consent.

I have uploaded the documents for you, you can find them via the Alpha Portal at https://consents-kdc.abcs.co.nz/ - log into your account, go to 'My Applications, click on 'BC', click on 'Documents', click on 'View Documents Issued'.

Please ensure that a copy of all plans, specifications and supporting documents are printed and available on site at all times.

For any further information send your enquiry to 210208@kdc.abcs.co.nz<mailto:210208@kdc.abcs.co.nz>

Kind Regards,

Sharon Campbell
Contractor
Kaipara District Council
Unit 6 - The Hub, 6 Molesworth Drive, Mangawhai 0505
P: (09) 439 3123 | E: buildingsupport@kaipara.govt.nz<mailto:buildingsupport@kaipara.govt.nz> | W: www.kaipara.govt.nz<http://www.kaipara.govt.nz>

_____

DISCLAIMER

This message is for the designated recipient(s) only, and may contain confidential and/or privileged information.
If you have received it in error, please delete it and advise the sender immediately.
You should not copy or use it for any other purpose, nor disclose its contents to any other person.

Designated Recipient(s): steve@RSEng.co.nz<mailto:steve@RSEng.co.nz>

Sent From: AlphaOne Building Consent System

Sent Date: 2 July 2021 12:29 - Friday

REJECTED ATTACHMENT(S):

Note: The listed file(s) below were rejected because they were not in PDF format.

- image001.png
- image003.jpg
- image004.png

ATTACHMENTS:

- BC210208.1-210531101123_form-5-building-consent.pdf

Email #51044: BC210208

Project ID: 210208
Date Received: 2021-08-09 16:35:08
Sender: no-reply@abcs.co.nz
Checked By: John Dowden
Accepted By: John Dowden
Subject:
Information Received Via Email: BC210208: New Documents Uploaded
Message:

Attention: BC210208 Assigned Staff
There are new document(s) that have been uploaded on BC210208 and these are:
17644-Inspection-Sheet-2021-08-06.pdf17644-Inspection-Sheet-2021-07-29_1.pdf

To view these documents, click the "Documents" button and accept them from there.
Generated by:AlphaOne Building Consent Systemwww.abcs.co.nz | www.alphaonebuildingconsent.comDate & Time: 9 August 2021, 4:30 pm - Monday | Signature Hash: fdf7ec53af7f0cbd6d146953ca0936495fc2039eATTENTION: Please do not reply to this email as the mailbox is unattended.
DISCLAIMER

This message is for the designated recipient(s) only, and may contain confidential and/or privileged information.
If you have received it in error, please delete it and advise the sender immediately.
You should not copy or use it for any other purpose, nor disclose its contents to any other person.

Designated Recipient(s): 210208@kdc.abcs.co.nz
Sent From: AlphaOne Building Consent System
Sent Date: 9 August 2021 16:30 - Monday

Email #51068: BC210208

Project ID: 210208
Date Received: 2021-08-10 11:20:02
Sender: julieanne.mollet@gjgardner.co.nz
Checked By: Michelle Nepia
Accepted By: John Dowden
Subject:

Information Received Via Email: Re: BC210208: 8 Sampsons Way Dargaville - Invoice for on charge for CS Thomas - ME June 2021

Message:

Hi

Further to the below invoice, we wish to dispute the charge on this. The specialised engineer had already charged 2 hours for the original review of documentation, she then took over 3 weeks to review and respond to our RFI response. We don't believe the invoice is a true reflection of the amount of work done from the engineer, as all she did was put a PS4 on the Building Consent for engineers sign off and had a brief discussion with our Contracts Manager.

Can you please review and advise.

Regards
Julieanne Mollet

Administrator | Sudfelt Construction Ltd -
Whangarei / Kaipara Franchisee for G.J. Gardner Homes
Ph: (09) 437 5666 <+6494375666> | Web: www.gjgardner.co.nz

[image: http://www.gjgardner.co.nz/assets/Uploads/Facebook.jpg] <https://www.facebook.com/GJGardnerHomesNewZealand> [image: http://www.gjgardner.co.nz/assets/Uploads/Pinterest.jpg] <http://www.pinterest.com/GJGardnerNZ/> [image: https://www.gjgardner.co.nz/assets/Uploads/Insta8.jpg] <https://www.instagram.com/gjgardnerhomesnz/?hl>

[image: http://www.gjgardner.co.nz/assets/Uploads/GJGardner.jpg] <http://www.gjgardner.co.nz/>

This email, including attachments, may contain information which is confidential or subject to legal privilege or copyright. If you are not the

intended recipient, please notify us immediately and then please delete all copies of this email from your system. You must not use, disseminate, distribute or reproduce this email, any attachments, or any part thereof if you are not the intended recipient.

Email communications are not secure and are not guaranteed by us to be free of unauthorised interference, error or virus. Anyone who communicates with us by email is taken to accept this risk. To the maximum extent permitted by law we are not liable for any virus or other defect in this email or in any attachment (or for any unauthorized changes made to or other interference with this email or to any attachment).

Please note that this communication does not designate an information system for the purposes of the Electronic Transactions Act 2002

On Thu, 15 Jul 2021 at 15:36, Kaipara District Council <
210208@kdc.abcs.co.nz> wrote:

> Good afternoon
>
> Please find attached the Kaipara District Council invoice for on charge of
> $396.00 for Specialist Engineering Review fees for CS Thomas Consulting
>
> On charged invoices sent are related to Specialist Engineering Fees where
> we have needed to consult with a CPENG or Chartered Professional Engineer
>
> Payment details are on the Invoice, ensure you reference BC210208 for
> correct allocation of the payment received
>
> For more information regarding the on charge:
> https://www.kaipara.govt.nz/services/building-guidance-consents/specialist-input-engineering-review-of-design
>
> If you have any questions regarding the invoice, please do not hesitate to
> contact us
>
> Thank you
>
> Kind regards
>
> Michelle Nepia
> Technical Support
> Kaipara District Council
> Unit 6 - The Hub, 6 Molesworth Drive, Mangawhai 0505
> P: (09) 439 3123 | E: buildingsupport@kaipara.govt.nz | W:

> www.kaipara.govt.nz
> ---
> *ATTACHMENTS:*
>
> - BC210208 - KDC Invoice for Oncharge.pdf
> <https://kdc.abcs.co.nz/a2/public/download/24218b4c-c769-3865-b24a-92dd05d3bb6e>
> - BC210208 - Inv #184583 - ME June 2021.pdf
> <https://kdc.abcs.co.nz/a2/public/download/5bf8cf3b-5d6d-3f0c-bcb9-b158ee54f44f>
>
>
> ---
> *DISCLAIMER*
> This message is for the designated recipient(s) only, and may contain
> confidential and/or privileged information. If you have received it in
> error, please delete it and advise the sender immediately. You should not
> copy or use it for any other purpose, nor disclose its contents to any
> other person.
>
> Designated Recipient(s): whangarei@gjgardner.co.nz
> Sent From: AlphaOne Building Consent System
> Sent Date: 15 July 2021 15:36:16 pm - Thursday

Email #51690: BC210208

Project ID: 210208
Date Received: 2021-09-08 11:05:09
Sender: julieanne.mollet@gjgardner.co.nz
Checked By: Michelle Nepia
Accepted By: Michelle Nepia
Subject:
Information Received Via Email: Fwd: BC210208: 8 Sampsons Way Dargaville - Invoice for on charge for CS Thomas - ME June 2021
Message:
Hi

I haven't received a response to the below email as yet. Could someone please come back on this as soon as possible?

Regards
Julieanne Mollet

Administrator | Sudfelt Construction Ltd -
Whangarei / Kaipara Franchisee for G.J. Gardner Homes
Ph: (09) 437 5666 <+6494375666> | Web: www.gjgardner.co.nz

[image: http://www.gjgardner.co.nz/assets/Uploads/Facebook.jpg] <https://www.facebook.com/GJGardnerHomesNewZealand> [image: http://www.gjgardner.co.nz/assets/Uploads/Pinterest.jpg] <http://www.pinterest.com/GJGardnerNZ/> [image: https://www.gjgardner.co.nz/assets/Uploads/Insta8.jpg] <https://www.instagram.com/gjgardnerhomesnz/?hl>

[image: http://www.gjgardner.co.nz/assets/Uploads/GJGardner.jpg] <http://www.gjgardner.co.nz/>

This email, including attachments, may contain information which is confidential or subject to legal privilege or copyright. If you are not the intended recipient, please notify us immediately and then please delete all copies of this email from your system. You must not use, disseminate, distribute or reproduce this email, any attachments, or any part thereof if you are not the intended recipient.

Email communications are not secure and are not guaranteed by us to be free of unauthorised interference, error or virus. Anyone who communicates with

us by email is taken to accept this risk. To the maximum extent permitted by law we are not liable for any virus or other defect in this email or in any attachment (or for any unauthorized changes made to or other interference with this email or to any attachment).

Please note that this communication does not designate an information system for the purposes of the Electronic Transactions Act 2002

---------- Forwarded message ---------
From: Julieanne Mollet <julieanne.mollet@gjgardner.co.nz>
Date: Tue, 10 Aug 2021 at 11:15
Subject: Re: BC210208: 8 Sampsons Way Dargaville - Invoice for on charge for CS Thomas - ME June 2021
To: <210208@kdc.abcs.co.nz>

Hi

Further to the below invoice, we wish to dispute the charge on this. The specialised engineer had already charged 2 hours for the original review of documentation, she then took over 3 weeks to review and respond to our RFI response. We don't believe the invoice is a true reflection of the amount of work done from the engineer, as all she did was put a PS4 on the Building Consent for engineers sign off and had a brief discussion with our Contracts Manager.

Can you please review and advise.

Regards
Julieanne Mollet

Administrator | Sudfelt Construction Ltd -
Whangarei / Kaipara Franchisee for G.J. Gardner Homes
Ph: (09) 437 5666 <+6494375666> | Web: www.gjgardner.co.nz

[image: http://www.gjgardner.co.nz/assets/Uploads/Facebook.jpg] <https://www.facebook.com/GJGardnerHomesNewZealand> [image: http://www.gjgardner.co.nz/assets/Uploads/Pinterest.jpg] <http://www.pinterest.com/GJGardnerNZ/> [image: https://www.gjgardner.co.nz/assets/Uploads/Insta8.jpg] <https://www.instagram.com/gjgardnerhomesnz/?hl>

[image: http://www.gjgardner.co.nz/assets/Uploads/GJGardner.jpg] <http://www.gjgardner.co.nz/>

This email, including attachments, may contain information which is confidential or subject to legal privilege or copyright. If you are not the intended recipient, please notify us immediately and then please delete all copies of this email from your system. You must not use, disseminate, distribute or reproduce this email, any attachments, or any part thereof if you are not the intended recipient.

Email communications are not secure and are not guaranteed by us to be free of unauthorised interference, error or virus. Anyone who communicates with us by email is taken to accept this risk. To the maximum extent permitted by law we are not liable for any virus or other defect in this email or in any attachment (or for any unauthorized changes made to or other interference with this email or to any attachment).

Please note that this communication does not designate an information system for the purposes of the Electronic Transactions Act 2002

On Thu, 15 Jul 2021 at 15:36, Kaipara District Council <
210208@kdc.abcs.co.nz> wrote:

> Good afternoon
>
> Please find attached the Kaipara District Council invoice for on charge of
> $396.00 for Specialist Engineering Review fees for CS Thomas Consulting
>
> On charged invoices sent are related to Specialist Engineering Fees where
> we have needed to consult with a CPENG or Chartered Professional Engineer
>
> Payment details are on the Invoice, ensure you reference BC210208 for
> correct allocation of the payment received
>
> For more information regarding the on charge:
> https://www.kaipara.govt.nz/services/building-guidance-consents/specialist-input-engineering-review-of-design
>
> If you have any questions regarding the invoice, please do not hesitate to
> contact us
>
> Thank you
>
> Kind regards
>
> Michelle Nepia
> Technical Support
> Kaipara District Council

> Unit 6 - The Hub, 6 Molesworth Drive, Mangawhai 0505
> P: (09) 439 3123 | E: buildingsupport@kaipara.govt.nz | W:
> www.kaipara.govt.nz
> ---
> *ATTACHMENTS:*
>
> - BC210208 - KDC Invoice for Oncharge.pdf
> <https://kdc.abcs.co.nz/a2/public/download/24218b4c-c769-3865-b24a-92dd05d3bb6e>
> - BC210208 - Inv #184583 - ME June 2021.pdf
> <https://kdc.abcs.co.nz/a2/public/download/5bf8cf3b-5d6d-3f0c-bcb9-b158ee54f44f>
>
>
> ---
> *DISCLAIMER*
> This message is for the designated recipient(s) only, and may contain
> confidential and/or privileged information. If you have received it in
> error, please delete it and advise the sender immediately. You should not
> copy or use it for any other purpose, nor disclose its contents to any
> other person.
>
> Designated Recipient(s): whangarei@gjgardner.co.nz
> Sent From: AlphaOne Building Consent System
> Sent Date: 15 July 2021 15:36:16 pm - Thursday

Email #56801: BC210208

Project ID: 210208
Date Received: 2022-03-17 18:35:03
Sender: no-reply@abcs.co.nz
Checked By: John Dowden
Accepted By: John Dowden
Subject:
Information Received Via Email: BC210208: New Documents Uploaded
Message:

Attention: BC210208 Assigned Staff
There are new document(s) that have been uploaded on BC210208 and these are:
Edge_-_Tiler_memo_PS3.pdfEdge_-_Waterproofing_Cert..pdf

To view these documents, click the "Documents" button and accept them from there.
Generated by:AlphaOne Building Consent Systemwww.abcs.co.nz | www.alphaonebuildingconsent.comDate & Time: 17 March 2022, 6:30 pm - Thursday | Signature Hash: e36391e4dabecbbe1b759a22c200b77285367e1eATTENTION: Please do not reply to this email as the mailbox is unattended.
DISCLAIMER

This message is for the designated recipient(s) only, and may contain confidential and/or privileged information.
If you have received it in error, please delete it and advise the sender immediately.
You should not copy or use it for any other purpose, nor disclose its contents to any other person.

Designated Recipient(s): 210208@kdc.abcs.co.nz
Sent From: AlphaOne Building Consent System
Sent Date: 17 March 2022 18:30 - Thursday

Email #56831: BC210208

Project ID: 210208
Date Received: 2022-03-18 14:35:02
Sender: no-reply@abcs.co.nz
Checked By: John Dowden
Accepted By: John Dowden
Subject:
Information Received Via Email: BC210208: New Documents Uploaded
Message:

Attention: BC210208 Assigned Staff
There are new document(s) that have been uploaded on BC210208 and these are:
Edge_-_Tiler_memo_PS3.pdfEdge_-_Waterproofing_Cert..pdfEdge_-_Plumber_Asbuilt.jpg.pdf

To view these documents, click the "Documents" button and accept them from there.
Generated by:AlphaOne Building Consent Systemwww.abcs.co.nz | www.alphaonebuildingconsent.comDate & Time: 18 March 2022, 2:30 pm - Friday | Signature Hash: e068148b5c6a7fe540f6bd047a1f0866d518353aATTENTION: Please do not reply to this email as the mailbox is unattended.
DISCLAIMER

This message is for the designated recipient(s) only, and may contain confidential and/or privileged information.
If you have received it in error, please delete it and advise the sender immediately.
You should not copy or use it for any other purpose, nor disclose its contents to any other person.

Designated Recipient(s): 210208@kdc.abcs.co.nz
Sent From: AlphaOne Building Consent System
Sent Date: 18 March 2022 14:30 - Friday

Email #56908: BC210208

Project ID: 210208
Date Received: 2022-03-22 10:35:05
Sender: no-reply@abcs.co.nz
Checked By: Aaron Brown
Accepted By: Aaron Brown
Subject:
Information Received Via Email: BC210208: New Documents Uploaded
Message:

Attention: BC210208 Assigned Staff
There are new document(s) that have been uploaded on BC210208 and these are:
Edge_-_Slab_RoW_Aaron_Bates.pdfEdge_Amended_Builders_RoW.pdf

To view these documents, click the "Documents" button and accept them from there.
Generated by:AlphaOne Building Consent Systemwww.abcs.co.nz | www.alphaonebuildingconsent.comDate & Time: 22 March 2022, 10:30 am - Tuesday | Signature Hash: 7449189080b6348d689978484f689bad2499a461ATTENTION: Please do not reply to this email as the mailbox is unattended.
DISCLAIMER

This message is for the designated recipient(s) only, and may contain confidential and/or privileged information.
If you have received it in error, please delete it and advise the sender immediately.
You should not copy or use it for any other purpose, nor disclose its contents to any other person.

Designated Recipient(s): 210208@kdc.abcs.co.nz
Sent From: AlphaOne Building Consent System
Sent Date: 22 March 2022 10:30 - Tuesday

Email #56951: BC210208

Project ID: 210208
Date Received: 2022-03-23 08:35:03
Sender: no-reply@abcs.co.nz
Checked By: Aaron Brown
Accepted By: Aaron Brown
Subject:
Information Received Via Email: BC210208: New Documents Uploaded
Message:

Attention: BC210208 Assigned Staff
There are new document(s) that have been uploaded on BC210208 and these are:
Edge_-_Slab_RoW_Aaron_Bates.pdfEdge_Amended_Builders_RoW.pdf20220322_132645.jpg.pdf

To view these documents, click the "Documents" button and accept them from there.
Generated by:AlphaOne Building Consent Systemwww.abcs.co.nz | www.alphaonebuildingconsent.comDate & Time: 23 March 2022, 8:30 am - Wednesday | Signature Hash: 5a76c49b4dadfd5952c83e63e177bdf02e2cd022ATTENTION: Please do not reply to this email as the mailbox is unattended.
DISCLAIMER

This message is for the designated recipient(s) only, and may contain confidential and/or privileged information.
If you have received it in error, please delete it and advise the sender immediately.
You should not copy or use it for any other purpose, nor disclose its contents to any other person.

Designated Recipient(s): 210208@kdc.abcs.co.nz
Sent From: AlphaOne Building Consent System
Sent Date: 23 March 2022 08:30 - Wednesday

Email #158443: BC210208

Project ID: 210208
Date Sent: 2021-04-06 11:26:35
Recipient: genna.jones@gjgardner.co.nz
Sender: Fay Fergus
Subject: BC210208: 8 Sampsons Way Dargaville
Message:

Hello

Thank you for your Building Consent application. Attached is the invoice for BC210208. Please use BC210208 as reference when making payment.

Your application is being checked for completeness and will not be formally accepted until payment and any requested information has been received.

Please be aware that further charges for specialist input may apply if applicable. For example: Engineering calculations or structural engineering design (SED)
requires review by KDC contracting engineers since no processing officer is qualified to assess engineering calculations. This is the situation and practice of
many smaller Councils across the country. Simple SED (e.g. "SED beam, raft or waffle slab, etc") are able to be processed in-house.

If you require any further assistance, please do not hesitate to contact me.

Kind Regards

Fay Fergus
Building Technical Support
Kaipara District Council
Unit 6 - The Hub, 6 Molesworth Drive, Mangawhai 0505
P: (09) 439 3123 | E: buildingsupport@kaipara.govt.nz | W: www.kaipara.govt.nz

Email #158455: BC210208

Project ID: 210208
Date Sent: 2021-04-06 12:26:31
Recipient: genna.jones@gjgardner.co.nz
Sender: Fay Fergus
Subject:
BC210208.1 Request For Further Information - Vetting - 8 Sampsons Way Dargaville
Message:
Hello Genna

Reference Number: BC210208
Project Location: 8 Sampsons Way, Dargaville
Project Description: Construct 3 Bedroom Dwelling with Attached Garage

Thank you for lodging your building consent application with the Kaipara District Council, the application has been reviewed for completeness in accordance with s45 of the Act. The attached letter details information which is required to be provided to enable your application to be formally receipted.

All information is to be supplied within 28 days (or the application may be refused). Please keep us informed if additional time is required.

So that your information gets to us as promptly as possible, please:

- ensure you reply directly to this email;
- only provide information specifically relating to this project;
- all attachments must be saved in PDF format;

By doing this you will keep your project moving as the information will be delivered directly to the processor. To speed up processing we would request that changes to plans are marked using the "cloud" convention - thank you for helping us to help you!

If you do not receive the automated reply confirmation from Kaipara District Council for the info sent then Kaipara District Council has not received your information.

Kind Regards

Fay Fergus
Building Technical Support

Kaipara District Council
Unit 6 - The Hub, 6 Molesworth Drive, Mangawhai 0505
P: (09) 439 3123 | E: buildingsupport@kaipara.govt.nz | W: www.kaipara.govt.nz

Email #159024: BC210208

Project ID: 210208
Date Sent: 2021-04-12 12:45:04
Recipient: genna.jones@gjgardner.co.nz
Sender: AlphaOne System
Subject: Application Accepted
Message:

Dear Genna Jones,

Your application for Building Consent only with reference code 78714207BP has passed the Section 45 check and has been lodged with Kaipara District Council.

If you entered an electronic application you can track its progress on the customer portal https://consents-kdc.abcs.co.nz/.

You may receive emails regarding your application from time to time.

Regards,

Kaipara District Council
Phone: (09) 439 3123
Email: buildingsupport@kaipara.govt.nz

Email #159910: BC210208

Project ID: 210208
Date Sent: 2021-04-20 13:44:55
Recipient: allocations@complynz.co.nz
Sender: Kerry Hewson
Subject: BC210208: A new job for you
Message:

Hello ComplyNZ,

BC210208 has been allocated to you. Please check and take appropriate action.

https://kdc.abcs.co.nz/jobs/210208

— AlphaOne System

Email #160294: BC210208

Project ID: 210208
Date Sent: 2021-04-23 15:20:48
Recipient: sharon.campbell@complynz.co.nz
Sender: Sandie MacLean
Subject: BC210208: A new job for you
Message:

Hello Sharon Campbell,

BC210208 has been allocated to you. Please check and take appropriate action.

https://kdc.abcs.co.nz/jobs/210208

— AlphaOne System

Email #160329: BC210208

Project ID: 210208
Date Sent: 2021-04-23 22:56:58
Recipient: steve@RSEng.co.nz
Sender: Matthew Bayly
Subject:
BC210208.1 Form 4: Certificate attached to PIM - 8 Sampsons Way Dargaville
Message:
Hi,

Please see attached a Form 4. This letter raises the District Plan rule breaches identified though a check of the proposal.

Reference Number: BC210208.1

Form 4: Certificate attached to PIM

Matthew Bayly
Planning Team
Kaipara District Council
Unit 6 - The Hub, 6 Molesworth Drive, Mangawhai 0505
P: (09) 439 3123 | E: buildingsupport@kaipara.govt.nz | W: www.kaipara.govt.nz

Email #160373: BC210208

Project ID: 210208
Date Sent: 2021-04-25 17:15:03
Recipient: cathytengineer@gmail.com
Sender: Cathy
Subject: Specialist Input Requested - 25 Apr 2021
Message:

Hello Cathy!

Specialist input has been requested on the following:

BC Number: BC210208
Building: Main Building
Question(s):
B1: Footings, Foundations (In-situ, masonry, SED): Does the design comply with that of the nominated compliance path and satisfy the requirements for B1 Structure and B2 Durability? Note: Please assess compliance of all footing and foundations (including those of SED elements) under this question.
Notes: Hi Cathy,

Can you please review the foundations. The geotech report notes ribraft is not suitable due to high water level, but engineer has designed a waffle pod type slab and is specifying subsoil drainage to manage the water. Outside my knowledge, but I'm not sure a subsoil drain will stop rising water. Thank you. I've organised the docs and they are located in the working folder.

Click the link to log in to your Dashboard: http://kdc.abcs.co.nz/dashboard/

Generated by:
AlphaOne Building Consent System
www.abcs.co.nz | www.alphaonebuildingconsent.com
Date & Time: 25 April 2021, 5:15 pm - Sunday | Signature Hash: 4b797fcaadd01ca32ffc331523c292c4cbe399d7

Email #160442: BC210208

Project ID: 210208
Date Sent: 2021-04-27 11:09:52
Recipient: genna.jones@gjgardner.co.nz
Sender: Sharon Campbell
Subject:
BC210208.1 Request For Further Information - 8 Sampsons Way Dargaville
Message:
Dear Sir/Madam,

Reference Number: BC210208
Project Location: 8 Sampsons Way, Dargaville
Project Description: Construct 3 Bedroom Dwelling with Attached Garage

Processing of your building consent application in accordance with s48 of the Building Act is currently in progress. The attached letter details information which is required to be provided to demonstrate that the proposed work will comply with s 48 of the NZ Building Act and Regulations. Please note that the processing time clock has been suspended pending this information.

So that your information gets to us as promptly as possible, please:
- ensure you reply directly to this email and the format of our email address must be in full as follows: 210208@kdc.abcs.co.nz
- provide only the information that specifically relates to this project;
- ensure that all attachments are saved in PDF format;

Following the above will keep your project moving and ensure the information is delivered directly to the processor. To speed up processing we would request that changes to plans are marked using the "cloud" convention - thank you for helping us to help you!

Regards,

Sharon Campbell
Contractor 022 697 5120
Kaipara District Council
Unit 6 - The Hub, 6 Molesworth Drive, Mangawhai 0505
P: (09) 439 3123 | E: buildingsupport@kaipara.govt.nz | W: www.kaipara.govt.nz

Email #160443: BC210208

Project ID: 210208
Date Sent: 2021-04-27 11:11:35
Recipient: whangarei@gjgardner.co.nz
Sender: Sharon Campbell
Subject:
BC210208.1 Request For Further Information - 8 Sampsons Way Dargaville
Message:
Good morning,

There is some confusion over which email to send the RFI to. Apologies for that.
It has been sent to the original application agent email address and designer also.

Reference Number: BC210208
Project Location: 8 Sampsons Way, Dargaville
Project Description: Construct 3 Bedroom Dwelling with Attached Garage

Processing of your building consent application in accordance with s48 of the Building Act is currently in progress. The attached letter details information which is required to be provided to demonstrate that the proposed work will comply with s 48 of the NZ Building Act and Regulations. Please note that the processing time clock has been suspended pending this information.

So that your information gets to us as promptly as possible, please:
- ensure you reply directly to this email and the format of our email address must be in full as follows: 210208@kdc.abcs.co.nz
- provide only the information that specifically relates to this project;
- ensure that all attachments are saved in PDF format;

Following the above will keep your project moving and ensure the information is delivered directly to the processor. To speed up processing we would request that changes to plans are marked using the "cloud" convention - thank you for helping us to help you!

Sharon Campbell
Contractor
Kaipara District Council
Unit 6 - The Hub, 6 Molesworth Drive, Mangawhai 0505
P: (09) 439 3123 | E: buildingsupport@kaipara.govt.nz | W: www.kaipara.govt.nz

Email #160492: BC210208

Project ID: 210208
Date Sent: 2021-04-27 14:28:00
Recipient: sharon.campbell@complynz.co.nz
Sender: Aaron Brown
Subject: BC210208: A new email has been allocated to you
Message:

Hello Sharon Campbell,

A new email for BC210208 has been allocated to you. Please check and take appropriate action.

https://kdc.abcs.co.nz/jobs/210208/communication/?optilbox

— AlphaOne System

Email #160789: BC210208

Project ID: 210208
Date Sent: 2021-04-29 21:04:09
Recipient: cathytengineer@gmail.com
Sender: Cathy
Subject: BC210208: A new job for you
Message:

Hello Cathy,

BC210208 has been allocated to you. Please check and take appropriate action.

https://kdc.abcs.co.nz/jobs/210208

— AlphaOne System

Email #160794: BC210208

Project ID: 210208
Date Sent: 2021-04-29 21:10:24
Recipient: sharon.campbell@complynz.co.nz
Sender: Cathy
Subject: BC210208: 8 Sampsons Way Dargaville
Message:

Hi Sharon, I have added RFI regarding waffle foundation slab on site with high water table. Have requested confirmation from Hawthorn and Geddes that proposed drainage system would be effective in this situation. Beam calcs required - to include point loads from girder trusses.

Regards

Cathy
Specialist Input CPEng
Kaipara District Council
Unit 6 - The Hub, 6 Molesworth Drive, Mangawhai 0505
P: (09) 439 3123 | E: buildingsupport@kaipara.govt.nz | W: www.kaipara.govt.nz

Email #160795: BC210208

Project ID: 210208
Date Sent: 2021-04-29 21:10:25
Recipient: sharon.campbell@complynz.co.nz
Sender: Cathy
Subject: BC210208: 8 Sampsons Way Dargaville
Message:

Hi Sharon, I have added RFI regarding waffle foundation slab on site with high water table. Have requested confirmation from Hawthorn and Geddes that proposed drainage system would be effective in this situation. Beam calcs required - to include point loads from girder trusses.

Regards

Cathy
Specialist Input CPEng
Kaipara District Council
Unit 6 - The Hub, 6 Molesworth Drive, Mangawhai 0505
P: (09) 439 3123 | E: buildingsupport@kaipara.govt.nz | W: www.kaipara.govt.nz

Email #160800: BC210208

Project ID: 210208
Date Sent: 2021-04-30 08:23:33
Recipient: whangarei@gjgardner.co.nz
Sender: Sharon Campbell
Subject:
BC210208.2 Request For Further Information - 8 Sampsons Way Dargaville
Message:
Good morning,

Please find attached a revised Request for information. This is due to a structural review being carried out and completed on this consent, so there are now additional RFI's.

Reference Number: BC210208
Project Location: 8 Sampsons Way, Dargaville
Project Description: Construct 3 Bedroom Dwelling with Attached Garage

Processing of your building consent application in accordance with s48 of the Building Act is currently in progress. The attached letter details information which is required to be provided to demonstrate that the proposed work will comply with s 48 of the NZ Building Act and Regulations. Please note that the processing time clock has been suspended pending this information.

So that your information gets to us as promptly as possible, please:
- ensure you reply directly to this email and the format of our email address must be in full as follows: 210208@kdc.abcs.co.nz
- provide only the information that specifically relates to this project;
- ensure that all attachments are saved in PDF format;

Following the above will keep your project moving and ensure the information is delivered directly to the processor. To speed up processing we would request that changes to plans are marked using the "cloud" convention - thank you for helping us to help you!

If you have any questions, please feel free to contact me on 022 697 5120.

Kind regards,

Sharon Campbell
Contractor
Kaipara District Council
Unit 6 - The Hub, 6 Molesworth Drive, Mangawhai 0505

P: (09) 439 3123 | E: buildingsupport@kaipara.govt.nz | W: www.kaipara.govt.nz

Email #160802: BC210208

Project ID: 210208
Date Sent: 2021-04-30 08:26:16
Recipient: whangarei@gjgardner.co.nz
Sender: Sharon Campbell
Subject: BC210208: 8 Sampsons Way Dargaville
Message:

Good morning,

I have sent you a revised RFI due to a structural review, however I had missed there were already replies from the first RFI.

I will assess these now and update the RFI letter.

So, please ignore the last email with a revised RFI - this will need to be adjusted. Note: You can of course pass on the structural queries to your engineer to get started.

I apologise for any confusion this may have caused.

Kind regards,

Sharon Campbell
Contractor
Kaipara District Council
Unit 6 - The Hub, 6 Molesworth Drive, Mangawhai 0505
P: (09) 439 3123 | E: buildingsupport@kaipara.govt.nz | W: www.kaipara.govt.nz

Email #160864: BC210208

Project ID: 210208
Date Sent: 2021-04-30 13:49:14
Recipient: whangarei@gjgardner.co.nz
Sender: Sharon Campbell
Subject:
BC210208.3 Request For Further Information - 8 Sampsons Way Dargaville
Message:
Good afternoon,

Reference Number: BC210208
Project Location: 8 Sampsons Way, Dargaville
Project Description: Construct 3 Bedroom Dwelling with Attached Garage

Processing of your building consent application in accordance with s48 of the Building Act is currently in progress. The attached letter details information which is required to be provided to demonstrate that the proposed work will comply with s 48 of the NZ Building Act and Regulations. Please note that the processing time clock has been suspended pending this information.

So that your information gets to us as promptly as possible, please:
- ensure you reply directly to this email and the format of our email address must be in full as follows: 210208@kdc.abcs.co.nz
- provide only the information that specifically relates to this project;
- ensure that all attachments are saved in PDF format;

Following the above will keep your project moving and ensure the information is delivered directly to the processor. To speed up processing we would request that changes to plans are marked using the "cloud" convention - thank you for helping us to help you!

This is the revised RFI that includes the structural review items and the only remaining items from RFI 1. If you have any queries, please feel free to contact me on 022 697 5120.

Regards,

Sharon Campbell
Contractor
Kaipara District Council
Unit 6 - The Hub, 6 Molesworth Drive, Mangawhai 0505
P: (09) 439 3123 | E: buildingsupport@kaipara.govt.nz | W: www.kaipara.govt.nz

Email #161114: BC210208

Project ID: 210208
Date Sent: 2021-05-04 14:12:40
Recipient: sharon.campbell@complynz.co.nz
Sender: Shalisha Blom
Subject: BC210208: A new email has been allocated to you
Message:

Hello Sharon Campbell,

A new email for BC210208 has been allocated to you. Please check and take appropriate action.

https://kdc.abcs.co.nz/jobs/210208/communication/?optilbox

— AlphaOne System

Email #161195: BC210208

Project ID: 210208
Date Sent: 2021-05-05 09:50:03
Recipient: julieanne.mollet@gjgardner.co.nz
Sender: AlphaOne System
Subject:
RE: Re: BC210208.3 Request For Further Information - 8 Sampsons Way Dargaville
Message:
Hello

Thank you for your message regarding your application with Kaipara District Council. This is an automated response to confirm your message has been received by the assigned officer for review. You can expect a response within 5 working days.

For further information or enquiries please email 210208@kdc.abcs.co.nz.

Kind regards

Kaipara District Council
Unit 6 - The Hub
6 Molesworth Drive
Mangawhai 0505
www.kaipara.govt.nz

Email #161203: BC210208

Project ID: 210208
Date Sent: 2021-05-05 10:44:25
Recipient: rachyledge@gmail.com
Sender: Sharon Martin
Subject: BC210208.1 PIM - 8 Sampsons Way Dargaville
Message:

Dear Sir/Madam,

Reference Number: BC210208.1

PIM

Attached is a copy of the issued Project Information Memorandum (PIM) with Form 4: Detailing the breaches of the District Plan.

This is not approval to build.

If you have any questions regarding the attached documents or to submit a resource consent application, please contact the Planning Team at rmaconsents@kaipara.govt.nz

Consent Notice-11765180.3 - Please ensure all / any consent notices pertaining to this site have been complied with before starting any building work. Please refer to attachments.

The Council recommends that you seek your own legal advice in relation to any breaches of the consent notice, and the potential consequences of this.

Vehicle Crossing as per consent Notice:11765180.3

Please note if a vehicle crossing is applicable, please forward completed documents to: council@kaipara.govt.nz with confirmation of your payment.

All inspections of Vehicle crossings will be undertaken by Roading.

For booking inspections or any relevant inquires contact can be made directly to the above email address.

Kind regards

Sharon Martin

Kaipara District Council

Unit 6 - The Hub, 6 Molesworth Drive, Mangawhai 0505
P: (09) 439 3123 | E: buildingsupport@kaipara.govt.nz | W: www.kaipara.govt.nz

Email #161211: BC210208

Project ID: 210208
Date Sent: 2021-05-05 11:32:27
Recipient: julieanne.mollet@gjgardner.co.nz
Sender: Sharon Campbell
Subject: BC210208: 8 Sampsons Way Dargaville
Message:

Hi Julieanne,

It is currently being reviewed.

Regards,

Sharon Campbell
Contractor
Kaipara District Council
Unit 6 - The Hub, 6 Molesworth Drive, Mangawhai 0505
P: (09) 439 3123 | E: buildingsupport@kaipara.govt.nz | W: www.kaipara.govt.nz

==========

Hi

Can I please get an update on whether the RFI responses we have submitted for this as being reviewed/accepted?

Thanks

Regards
Julieanne Mollet

Administrator | Sudfelt Construction Ltd -
Whangarei / Kaipara Franchisee for G.J. Gardner Homes
Ph: (09) 437 5666 | Web: www.gjgardner.co.nz

[image: http://www.gjgardner.co.nz/assets/Uploads/Facebook.jpg]
[image:

http://www.gjgardner.co.nz/assets/Uploads/Pinterest.jpg]
[image:
https://www.gjgardner.co.nz/assets/Uploads/Insta8.jpg]

[image: http://www.gjgardner.co.nz/assets/Uploads/GJGardner.jpg]

This email, including attachments, may contain information which is confidential or subject to legal privilege or copyright. If you are not the intended recipient, please notify us immediately and then please delete all copies of this email from your system. You must not use, disseminate, distribute or reproduce this email, any attachments, or any part thereof if you are not the intended recipient.

Email communications are not secure and are not guaranteed by us to be free of unauthorised interference, error or virus. Anyone who communicates with us by email is taken to accept this risk. To the maximum extent permitted by law we are not liable for any virus or other defect in this email or in any attachment (or for any unauthorized changes made to or other interference with this email or to any attachment).

Please note that this communication does not designate an information system for the purposes of the Electronic Transactions Act 2002

On Fri, 30 Apr 2021 at 13:49, Kaipara District Council wrote:

> Good afternoon,
>
>
> Reference Number: BC210208
> Project Location: 8 Sampsons Way, Dargaville
> Project Description: Construct 3 Bedroom Dwelling with Attached Garage
>
>
> Processing of your building consent application in accordance with s48 of
> the Building Act is currently in progress. The attached letter details
> information which is required to be provided to demonstrate that the
> proposed work will comply with s 48 of the NZ Building Act and Regulations.
> Please note that the processing time clock has been suspended pending this
> information.
>
> So that your information gets to us as promptly as possible, please:
> - ensure you reply directly to this email and the format of our email

> address must be in full as follows: 210208@kdc.abcs.co.nz
> - provide only the information that specifically relates to this project;
> - ensure that all attachments are saved in PDF format;
>
> Following the above will keep your project moving and ensure the
> information is delivered directly to the processor. To speed up processing
> we would request that changes to plans are marked using the "cloud"
> convention - thank you for helping us to help you!
>
> This is the revised RFI that includes the structural review items and the
> only remaining items from RFI 1. If you have any queries, please feel free
> to contact me on 022 697 5120.
>
> Regards,
>
> Sharon Campbell
> Contractor
> Kaipara District Council
> Unit 6 - The Hub, 6 Molesworth Drive, Mangawhai 0505
> P: (09) 439 3123 | E: buildingsupport@kaipara.govt.nz | W:
> www.kaipara.govt.nz
>
>
> ----------
>
> *DISCLAIMER*
>
>
> This message is for the designated recipient(s) only, and may contain
> confidential and/or privileged information.
> If you have received it in error, please delete it and advise the sender
> immediately.
> You should not copy or use it for any other purpose, nor disclose its
> contents to any other person.
>
>
> Designated Recipient(s): whangarei@gjgardner.co.nz
>
> Sent From: AlphaOne Building Consent System
>
> Sent Date: 30 April 2021 13:49 - Friday
>
>

Email #161212: BC210208

Project ID: 210208
Date Sent: 2021-05-05 11:37:21
Recipient: cathytengineer@gmail.com
Sender: Sharon Campbell
Subject: BC210208: 8 Sampsons Way Dargaville
Message:

Good morning Cathy,

Please see the response to your RFI. I'm not sure that they've provided anything additionally to what was originally submitted?

Regards,

Sharon Campbell
Contractor
Kaipara District Council
Unit 6 - The Hub, 6 Molesworth Drive, Mangawhai 0505
P: (09) 439 3123 | E: buildingsupport@kaipara.govt.nz | W: www.kaipara.govt.nz

From: Ean Dawson
Sent: Monday, 3 May 2021 2:11 pm
To: Building Support
Cc: Julieanne Mollet ; Michael Sudfelt
Subject: 8 Sampsons Way - Ref no. 210208.3

CAUTION: This email originated from outside Kaipara District Council. Do not click links or open attachments unless you recognise the sender and know the content is safe.

Tena koe,

I have had trouble with the online RFI KDC online portal, so I have attached the required calculations and the RFI query below for your reference.

RFI 1: Structural engineer review: The Hawthorn Geddes geotechnical report states that a waffle foundation slab is not suitable for this site due to ground water encountered at less than 0.6m below ground surface.
Please confirm your drainage proposal with the Hawthorn Geddes geotechnical engineer. Provide confirmation that the drainage system proposed would be effective in mitigating the issue with high water table.

Please find attached calculations provided by RSeng providing the requirements of the subsoil drain.

Please if you have any questions please do not hesitate to contact me.

Ng? mihi nui,
Ean Dawson

Contracts Manager | Sudfelt Construction Ltd - Whangarei / Kaipara Franchisee for G.J. Gardner Homes
Ph: (09) 437 5666 | Web: www.gjgardner.co.nz
[http://www.gjgardner.co.nz/assets/Uploads/Facebook.jpg] [http://www.gjgardner.co.nz/assets/Uploads/Pinterest.jpg] [https://www.gjgardner.co.nz/assets/Uploads/Insta8.jpg]

[http://www.gjgardner.co.nz/assets/Uploads/GJGardner.jpg]

This email, including attachments, may contain information which is confidential or subject to legal privilege or copyright. If you are not the intended recipient, please notify us immediately and then please delete all copies of this email from your system. You must not use, disseminate, distribute or reproduce this email, any attachments, or any part thereof if you are not the intended recipient.

Email communications are not secure and are not guaranteed by us to be free of unauthorised interference, error or virus. Anyone who communicates with us by email is taken to accept this risk. To the maximum extent permitted by law we are not liable for any virus or other defect in this email or in any attachment (or for any unauthorized changes made to or other interference with this email or to any attachment).

Please note that this communication does not designate an information system for the purposes of the Electronic Transactions Act 2002.

Email #161322: BC210208

Project ID: 210208
Date Sent: 2021-05-06 09:31:02
Recipient: mbayly@kaipara.govt.nz
Sender: Shalisha Blom
Subject: BC210208: A new email has been allocated to you
Message:

Hello Matthew Bayly,

A new email for BC210208 has been allocated to you. Please check and take appropriate action.

https://kdc.abcs.co.nz/jobs/210208/communication/?optilbox

— AlphaOne System

Email #161442: BC210208

Project ID: 210208
Date Sent: 2021-05-06 22:25:08
Recipient: cathytengineer@gmail.com
Sender: AlphaOne System
Subject: RE: Re: BC210208: 8 Sampsons Way Dargaville
Message:

Hello

Thank you for your message regarding your application with Kaipara District Council. This is an automated response to confirm your message has been received by the assigned officer for review. You can expect a response within 5 working days.

For further information or enquiries please email 210208@kdc.abcs.co.nz.

Kind regards

Kaipara District Council
Unit 6 - The Hub
6 Molesworth Drive
Mangawhai 0505
www.kaipara.govt.nz

Email #161448: BC210208

Project ID: 210208
Date Sent: 2021-05-07 07:37:51
Recipient: sharon.campbell@complynz.co.nz
Sender: Greg Bellam
Subject: BC210208: A new email has been allocated to you
Message:

Hello Sharon Campbell,

A new email for BC210208 has been allocated to you. Please check and take appropriate action.

https://kdc.abcs.co.nz/jobs/210208/communication/?optilbox

— AlphaOne System

Email #161474: BC210208

Project ID: 210208
Date Sent: 2021-05-07 11:47:51
Recipient: steve@RSEng.co.nz
Sender: Sharon Campbell
Subject:
BC210208.4 Request For Further Information - 8 Sampsons Way Dargaville
Message:
Good morning,

Reference Number: BC210208
Project Location: 8 Sampsons Way, Dargaville
Project Description: Construct 3 Bedroom Dwelling with Attached Garage

Processing of your building consent application in accordance with s48 of the Building Act is currently in progress. The attached letter details information which is required to be provided to demonstrate that the proposed work will comply with s 48 of the NZ Building Act and Regulations. Please note that the processing time clock has been suspended pending this information.

So that your information gets to us as promptly as possible, please:
- ensure you reply directly to this email and the format of our email address must be in full as follows: 210208@kdc.abcs.co.nz
- provide only the information that specifically relates to this project;
- ensure that all attachments are saved in PDF format;

Following the above will keep your project moving and ensure the information is delivered directly to the processor. To speed up processing we would request that changes to plans are marked using the "cloud" convention - thank you for helping us to help you!

Regards,

Sharon Campbell
Contractor 022 697 5120
Kaipara District Council
Unit 6 - The Hub, 6 Molesworth Drive, Mangawhai 0505
P: (09) 439 3123 | E: buildingsupport@kaipara.govt.nz | W: www.kaipara.govt.nz

Email #161496: BC210208

Project ID: 210208
Date Sent: 2021-05-07 14:51:15
Recipient: sharon.campbell@complynz.co.nz
Sender: Greg Bellam
Subject: BC210208: A new email has been allocated to you
Message:

Hello Sharon Campbell,

A new email for BC210208 has been allocated to you. Please check and take appropriate action.

https://kdc.abcs.co.nz/jobs/210208/communication/?optilbox

— AlphaOne System

Email #161535: BC210208

Project ID: 210208
Date Sent: 2021-05-08 21:58:32
Recipient: buildingsupport@kaipara.govt.nz
Sender: Matthew Bayly
Subject: BC210208: 8 Sampsons Way Dargaville
Message:

Hi,

There is not enough space provided to accommodate the required 8m turning radius, a resource consent would be needed to achieve the proposed arrangement if deemed acceptable.

Matthew Bayly
Planning Team
Kaipara District Council
Unit 6 - The Hub, 6 Molesworth Drive, Mangawhai 0505
P: (09) 439 3123 | E: buildingsupport@kaipara.govt.nz | W: www.kaipara.govt.nz

==========

From: Ean Dawson
Sent: Wednesday, 5 May 2021 4:15 pm
To: Building Support
Cc: Julieanne Mollet ; Michael Sudfelt
Subject: 8 Sampsons Way - Ref no 210208.3

CAUTION: This email originated from outside Kaipara District Council. Do not click links or open attachments unless you recognise the sender and know the content is safe.

Tena koe,

Please find attached site plan and RFI PIM requests for the above job. I have answered below.

13.10.01a - Excavation and Fill:
Please demonstrate compliance with this rule by providing compliant earthwork volumes

Please find attached a site plan showing the cut/fill schedule and location of earthworks, this is 170m? (under the 200m?) limit under the district plan.

13.10.25 - Vehicle Access and Driveways:
1. Control of reversing provisions will not comply and will therefore be classed as a Restricted Discretionary

Vehicle tracking on the site plan attached is as per AS/NZS 2890.1:2004 (Off Street Car Parking) - B99 Vehicle (Realistic min radius) (2004) without any allowances for lock to lock time (i.e. vehicles are turning lock to lock while stationary). I have modified the driveway to suit the vehicles and also moved the building closer to the road boundary so we do not go over the impermeable areas.

13.10.27 - Parking:
1. Control of reversing provisions will not comply and will therefore be classed as a Restricted Discretionary Activity so resource consent will be required to be obtained before this activity can occur.

As per above, vehicle tracking added for the 2 x vehicles.

Let me know if you require any further information.

Ng? mihi nui,
Ean Dawson

Contracts Manager | Sudfelt Construction Ltd - Whangarei / Kaipara Franchisee for G.J. Gardner Homes
Ph: (09) 437 5666 | Web: www.gjgardner.co.nz
[http://www.gjgardner.co.nz/assets/Uploads/Facebook.jpg] [http://www.gjgardner.co.nz/assets/Uploads/Pinterest.jpg] [https://www.gjgardner.co.nz/assets/Uploads/Insta8.jpg]

[http://www.gjgardner.co.nz/assets/Uploads/GJGardner.jpg]

This email, including attachments, may contain information which is confidential or subject to legal privilege or copyright. If you are not the intended recipient, please notify us immediately and then please delete all copies of this email from your system. You must not use, disseminate, distribute or reproduce this email, any attachments, or any part thereof if you are not the intended recipient.

Email communications are not secure and are not guaranteed by us to be free of unauthorised interference, error or virus. Anyone who communicates with us by email is taken to accept this risk. To the maximum extent permitted by law we are not liable for any virus or other defect in this email or in any attachment (or for any unauthorized changes made to or other interference with this email or to any attachment).

Please note that this communication does not designate an information system for the purposes of the Electronic Transactions Act 2002.

Email #161939: BC210208

Project ID: 210208
Date Sent: 2021-05-12 15:51:36
Recipient: whangarei@gjgardner.co.nz
Sender: Michelle Nepia
Subject:
BC210208: 8 Sampsons Way Dargaville - Invoice for on charge for CS Thomas - ME April 2021
Message:
Good afternoon

Please find attached the Kaipara District Council invoice for on charge of $396.00 for Specialist Engineering Review fees for CS Thomas Consulting

On charged invoices sent are related to Specialist Engineering Fees where we have needed to consult with a CPENG or Chartered Professional Engineer

Payment details are on the Invoice, ensure you reference BC210208 for correct allocation of the payment received

For more information regarding the on charge:
https://www.kaipara.govt.nz/services/building-guidance-consents/specialist-input-engineering-review-of-design

If you have any questions regarding the invoice, please do not hesitate to contact us

Thank you

Kind regards

Michelle Nepia
Technical Support
Kaipara District Council
Unit 6 - The Hub, 6 Molesworth Drive, Mangawhai 0505
P: (09) 439 3123 | E: buildingsupport@kaipara.govt.nz | W: www.kaipara.govt.nz

Email #162031: BC210208

Project ID: 210208
Date Sent: 2021-05-13 13:33:27
Recipient:
steve@RSEng.co.nz, conrad_lienert_design@hotmail.com
Sender: Sharon Campbell
Subject:
BC210208.5 Request For Further Information - 8 Sampsons Way Dargaville
Message:
Good afternoon,

Reference Number: BC210208
Project Location: 8 Sampsons Way, Dargaville
Project Description: Construct 3 Bedroom Dwelling with Attached Garage

Processing of your building consent application in accordance with s48 of the Building Act is currently in progress. The attached letter details information which is required to be provided to demonstrate that the proposed work will comply with s 48 of the NZ Building Act and Regulations. Please note that the processing time clock has been suspended pending this information.

So that your information gets to us as promptly as possible, please:
- ensure you reply directly to this email and the format of our email address must be in full as follows: 210208@kdc.abcs.co.nz
- provide only the information that specifically relates to this project;
- ensure that all attachments are saved in PDF format;

Following the above will keep your project moving and ensure the information is delivered directly to the processor. To speed up processing we would request that changes to plans are marked using the "cloud" convention - thank you for helping us to help you!

We received one reply for the last RFI letter, but two items are still outstanding.
Please reply in full for future RFI response.

Regards,

Sharon Campbell
Contractor 022 697 5120
Kaipara District Council

Unit 6 - The Hub, 6 Molesworth Drive, Mangawhai 0505
P: (09) 439 3123 | E: buildingsupport@kaipara.govt.nz | W: www.kaipara.govt.nz

Email #162032: BC210208

Project ID: 210208
Date Sent: 2021-05-13 13:34:14
Recipient: allocations@complynz.co.nz
Sender: Sharon Campbell
Subject: BC210208: 8 Sampsons Way Dargaville
Message:

Good afternoon,

Please file RFI 4 letter and email.

Regards,

Sharon Campbell
Contractor
Kaipara District Council
Unit 6 - The Hub, 6 Molesworth Drive, Mangawhai 0505
P: (09) 439 3123 | E: buildingsupport@kaipara.govt.nz | W: www.kaipara.govt.nz

Good afternoon,

Reference Number: BC210208
Project Location: 8 Sampsons Way, Dargaville
Project Description: Construct 3 Bedroom Dwelling with Attached Garage

Processing of your building consent application in accordance with s48 of the Building Act is currently in progress. The attached letter details information which is required to be provided to demonstrate that the proposed work will comply with s 48 of the NZ Building Act and Regulations. Please note that the processing time clock has been suspended pending this information.

So that your information gets to us as promptly as possible, please:
- ensure you reply directly to this email and the format of our email address must be in full as follows: 210208@kdc.abcs.co.nz
- provide only the information that specifically relates to this project;
- ensure that all attachments are saved in PDF format;

Following the above will keep your project moving and ensure the information is delivered directly to the processor. To speed up processing we would request that changes to plans are marked using the "cloud" convention - thank

you for helping us to help you!

We received one reply for the last RFI letter, but two items are still outstanding.
Please reply in full for future RFI response.

Regards,

Sharon Campbell
Contractor 022 697 5120
Kaipara District Council
Unit 6 - The Hub, 6 Molesworth Drive, Mangawhai 0505
P: (09) 439 3123 | E: buildingsupport@kaipara.govt.nz | W: www.kaipara.govt.nz

Email #162042: BC210208

Project ID: 210208
Date Sent: 2021-05-13 14:40:08
Recipient: ean.dawson@gjgardner.co.nz
Sender: AlphaOne System
Subject: RE: Ref number 210208.5
Message:

Hello

Thank you for your message regarding your application with Kaipara District Council. This is an automated response to confirm your message has been received by the assigned officer for review. You can expect a response within 5 working days.

For further information or enquiries please email 210208@kdc.abcs.co.nz.

Kind regards

Kaipara District Council
Unit 6 - The Hub
6 Molesworth Drive
Mangawhai 0505
www.kaipara.govt.nz

Email #162063: BC210208

Project ID: 210208
Date Sent: 2021-05-13 15:34:17
Recipient: sblom@kaipara.govt.nz
Sender: Shalisha Blom
Subject: BC210208: A new email has been allocated to you
Message:

Hello Shalisha Blom,

A new email for BC210208 has been allocated to you. Please check and take appropriate action.

https://kdc.abcs.co.nz/jobs/210208/communication/?optilbox

— AlphaOne System

Email #162064: BC210208

Project ID: 210208
Date Sent: 2021-05-13 15:36:45
Recipient: sharon.campbell@complynz.co.nz
Sender: Shalisha Blom
Subject: BC210208: A new email has been allocated to you
Message:

Hello Sharon Campbell,

A new email for BC210208 has been allocated to you. Please check and take appropriate action.

https://kdc.abcs.co.nz/jobs/210208/communication/?optilbox

— AlphaOne System

Email #162191: BC210208

Project ID: 210208
Date Sent: 2021-05-14 14:31:40
Recipient: cathytengineer@gmail.com
Sender: Sharon Campbell
Subject: BC210208: 8 Sampsons Way Dargaville
Message:

Good afternoon Cathy,

I spoke to Ean and he is querying your RFI 2. Apparently the geotechnical engineer who wrote the report passed away about 1 1/2 years ago, so they are unsure what to do.

He would like to speak to you if possible and I've advised I would forward his number to you.

Can you please give him a call on 0274928551.

If this is not the process, then please let me know.

Kind regards,

Sharon Campbell
Contractor
Kaipara District Council
Unit 6 - The Hub, 6 Molesworth Drive, Mangawhai 0505
P: (09) 439 3123 | E: buildingsupport@kaipara.govt.nz | W: www.kaipara.govt.nz

Kia ora,

Can Sharon please give me a call on 0274928551. Would just like to clarify
RFI 2 of the floor slab.

If this could be done as soon as possible it would be appreciated.

*Ng**? mihi nui,*
Ean Dawson

Contracts Manager | Sudfelt Construction Ltd -
Whangarei / Kaipara Franchisee for G.J. Gardner Homes
Ph: (09) 437 5666 | Web: www.gjgardner.co.nz

[image: http://www.gjgardner.co.nz/assets/Uploads/Facebook.jpg]
[image:
http://www.gjgardner.co.nz/assets/Uploads/Pinterest.jpg]
[image:
https://www.gjgardner.co.nz/assets/Uploads/Insta8.jpg]

[image: http://www.gjgardner.co.nz/assets/Uploads/GJGardner.jpg]

This email, including attachments, may contain information which is confidential or subject to legal privilege or copyright. If you are not the intended recipient, please notify us immediately and then please delete all copies of this email from your system. You must not use, disseminate, distribute or reproduce this email, any attachments, or any part thereof if you are not the intended recipient.

Email communications are not secure and are not guaranteed by us to be free of unauthorised interference, error or virus. Anyone who communicates with us by email is taken to accept this risk. To the maximum extent permitted by law we are not liable for any virus or other defect in this email or in any attachment (or for any unauthorized changes made to or other interference with this email or to any attachment).

Please note that this communication does not designate an information system for the purposes of the Electronic Transactions Act 2002.

Email #163573: BC210208

Project ID: 210208
Date Sent: 2021-05-30 09:08:07
Recipient: whangarei@gjgardner.co.nz
Sender: AlphaOne System
Subject:
BC210208: Document Rejected | Address: 8 Sampsons Way Dargaville
Message:

Dear Genna Jones,

The following document for BC210208 has been rejected for the following reasons: This document has been uploaded to the wrong section. If it is a response to an RFI, please either attach to an email reply or put into the RFI response section of the portal.

Document Name: 390076_-_EDGE_-_SITE_PLAN_HOUSE_MOVE_-28-05-21.pdf

Regards,

Kaipara District Council

(09) 439 3123 | buildingsupport@kaipara.govt.nz | www.kaipara.govt.nz

Email #163574: BC210208

Project ID: 210208
Date Sent: 2021-05-30 09:14:02
Recipient: cathytengineer@gmail.com
Sender: Sharon Campbell
Subject: BC210208: 8 Sampsons Way Dargaville
Message:

Good morning Cathy,

I'm not sure if you are able to view the RFI responses in the RFI portal? The agent has simply written a response in here.
In case you aren't able to access this, here is their response.

'After communication with Linda (structural engineer peer reviewer) her thoughts are on getting a geotechnical engineer to oversee the design of RSEng subsoil drain solution. This is a new subdivision with approximately 5 newly constructed homes, will this effect any of them as we built another one which didn't require a geotechnical review of the subsoil drain design?

As discussed with Linda, the geotechnical engineer Dean Botica of Hawthorn Geddes who did the original subdivision geotech design, has now passed. How do you see us sorting this RFI and moving forward with this, as we don't want to have to engage an additional engineer and incur further costs for our client?'

This was written 14th May. I responded and advised they need to deal directly with you regarding this item.

This is the latest response:

The following is what RS Eng responded with:
Noted that the subdivision report outlines that a waffle foundation slab was not suitable due to elevated groundwater. RS Eng has addressed this issue by installing a drain on top of the hard pan, around the hardfill to remove groundwater from the building area, refer page 3 of calculations. This has been installed on a number of other properties in the area and along with keeping the dwelling elevated has worked effectively. It is not appropriate for Hawthorn Geddes to comment on RS Eng design approach for the dwelling.

I wait your response and instructions should another RFI be needed or it can be closed off.

Thanks Cathy.

Kind regards,

Sharon Campbell
Contractor
Kaipara District Council
Unit 6 - The Hub, 6 Molesworth Drive, Mangawhai 0505
P: (09) 439 3123 | E: buildingsupport@kaipara.govt.nz | W: www.kaipara.govt.nz

Email #163675: BC210208

Project ID: 210208
Date Sent: 2021-05-31 13:00:08
Recipient: sharon.campbell@complynz.co.nz
Sender: AlphaOne System
Subject: RE: Fwd: Site Plan - BC210208
Message:

Hello

Thank you for your message regarding your application with Kaipara District Council. This is an automated response to confirm your message has been received by the assigned officer for review. You can expect a response within 5 working days.

We accept email attachments in PDF, JPG and PNG format.

ACCEPTED ATTACHMENTS:
- 390076 - EDGE - SITE PLAN HOUSE MOVE -28-05-21 1.pdf (291.58kB)

For further information or enquiries please email 210208@kdc.abcs.co.nz.

Kind regards

Kaipara District Council
Unit 6 - The Hub
6 Molesworth Drive
Mangawhai 0505
www.kaipara.govt.nz

Email #163744: BC210208

Project ID: 210208
Date Sent: 2021-05-31 17:20:03
Recipient: sharon.campbell@complynz.co.nz
Sender: AlphaOne System
Subject: RE: Fwd: Site Plan - BC210208
Message:

Hello

Thank you for your message regarding your application with Kaipara District Council. This is an automated response to confirm your message has been received by the assigned officer for review. You can expect a response within 5 working days.

For further information or enquiries please email 210208@kdc.abcs.co.nz.

Kind regards

Kaipara District Council
Unit 6 - The Hub
6 Molesworth Drive
Mangawhai 0505
www.kaipara.govt.nz

Email #163751: BC210208

Project ID: 210208
Date Sent: 2021-05-31 21:40:38
Recipient: gbellam@kaipara.govt.nz
Sender: Cathy
Subject: BC210208: 8 Sampsons Way Dargaville
Message:

Hello Greg, I received a phone call from the client regarding the issue of the potential high water table at this site. Hawthorne Geddes specifically advised against raft foundations. This is likely due to potential settlement if water table rises. I understand that several new houses of this type have already been built at the new subdivision. As these are new, even if they have no issues, this doesn't mean there could not be an issue in the future. The risk for KDC is that there is a geotechnical report containing this recommendation so it would be prudent to address this. RSEng have responded that they have addressed the problem by installing a subsoil drain around the dwellings. I am not convinced that this would be adequate for a high water table. Where would the water drain to? The drains are small and would likely just be submerged. The client is reluctant to obtain independent geotechnical advice as recommended. Although RSEng carry out geotechnical work, I have maintained that the advice needs to be independent as they have a conflict of interest.

Regards

Cathy
Specialist Input CPEng
Kaipara District Council
Unit 6 - The Hub, 6 Molesworth Drive, Mangawhai 0505
P: (09) 439 3123 | E: buildingsupport@kaipara.govt.nz | W: www.kaipara.govt.nz

Hi Sharon, no, nothing additional submitted so I have put my response below RFI. Confirmation of drainage design from Hawthorn Geddes required. I am not convinced that a simple drain would be adequate to counter a high water table. Ground conditions around Dargaville can be very problematic with high water table and soft ground conditions. Unfortunately I have witnessed some dramatic results - where a waffle foundation slab tilted/sank approximately 100mm. It's not clear to me why an engineer would take such a design risk. If we have further issues regarding this we will need to escalate it to Greg Bellam. I consider this design high risk.

Regards
Cathy

On Wed, May 5, 2021 at 11:37 AM Kaipara District Council wrote:

> Good morning Cathy,
>
> Please see the response to your RFI. I'm not sure that they've provided
> anything additionally to what was originally submitted?
>
> Regards,
>
> Sharon Campbell
> Contractor
> Kaipara District Council
> Unit 6 - The Hub, 6 Molesworth Drive, Mangawhai 0505
> P: (09) 439 3123 | E: buildingsupport@kaipara.govt.nz | W:
> www.kaipara.govt.nz
>
>
>
> From: Ean Dawson
> Sent: Monday, 3 May 2021 2:11 pm
> To: Building Support
> Cc: Julieanne Mollet ; Michael Sudfelt
> Subject: 8 Sampsons Way - Ref no. 210208.3
>
> CAUTION: This email originated from outside Kaipara District Council. Do
> not click links or open attachments unless you recognise the sender and
> know the content is safe.
>
> Tena koe,
>
> I have had trouble with the online RFI KDC online portal, so I have
> attached the required calculations and the RFI query below for your
> reference.
>
> RFI 1: Structural engineer review: The Hawthorn Geddes geotechnical report
> states that a waffle foundation slab is not suitable for this site due to
> ground water encountered at less than 0.6m below ground surface.
> Please confirm your drainage proposal with the Hawthorn Geddes
> geotechnical engineer. Provide confirmation that the drainage system
> proposed would be effective in mitigating the issue with high water
> table.
>
> Please find attached calculations provided by RSeng providing the
> requirements of the subsoil drain.
>
> Please if you have any questions please do not hesitate to contact me.

>
> Ng? mihi nui,
> Ean Dawson
>
> Contracts Manager | Sudfelt Construction Ltd - Whangarei / Kaipara
> Franchisee for G.J. Gardner Homes
> Ph: (09) 437 5666 | Web: www.gjgardner.co.nz
> [http://www.gjgardner.co.nz/assets/Uploads/Facebook.jpg] [
> http://www.gjgardner.co.nz/assets/Uploads/Pinterest.jpg] [
> https://www.gjgardner.co.nz/assets/Uploads/Insta8.jpg]
>
> [http://www.gjgardner.co.nz/assets/Uploads/GJGardner.jpg]
>
> This email, including attachments, may contain information which is
> confidential or subject to legal privilege or copyright. If you are not the
> intended recipient, please notify us immediately and then please delete all
> copies of this email from your system. You must not use, disseminate,
> distribute or reproduce this email, any attachments, or any part thereof if
> you are not the intended recipient.
>
> Email communications are not secure and are not guaranteed by us to be
> free of unauthorised interference, error or virus. Anyone who communicates
> with us by email is taken to accept this risk. To the maximum extent
> permitted by law we are not liable for any virus or other defect in this
> email or in any attachment (or for any unauthorized changes made to or
> other interference with this email or to any attachment).
>
> Please note that this communication does not designate an information
> system for the purposes of the Electronic Transactions Act 2002.
>
>
> ----------
> *ATTACHMENTS:*
>
> - .
>
>
>
> ----------
> *DISCLAIMER*
> This message is for the designated recipient(s) only, and may contain
> confidential and/or privileged information. If you have received it in
> error, please delete it and advise the sender immediately. You should not
> copy or use it for any other purpose, nor disclose its contents to any

> other person.
>
> Designated Recipient(s): cathytengineer@gmail.com,
> allocations@complynz.co.nz
> Sent From: AlphaOne Building Consent System
> Sent Date: 5 May 2021 11:37:19 am - Wednesday

Email #165012: BC210208

Project ID: 210208
Date Sent: 2021-06-14 13:30:07
Recipient: ean.dawson@gjgardner.co.nz
Sender: AlphaOne System
Subject: RE: Fwd: FW: 8 Sampsons Way
Message:

Hello

Thank you for your message regarding your application with Kaipara District Council. This is an automated response to confirm your message has been received by the assigned officer for review. You can expect a response within 5 working days.

We accept email attachments in PDF, JPG and PNG format.

REJECTED ATTACHMENTS:
- image001.jpg (823.00B)
- image002.jpg (1.61kB)
- image003.jpg (338.00B)
- image004.jpg (419.00B)
- image005.png (52.91kB)
- image006.png (134.18kB)
- image007.png (349.33kB)
- image008.jpg (338.00B)
- image009.jpg (419.00B)
- image010.jpg (1.92kB)

The rejected attachment(s) may be from your signature. If not, please contact the AlphaOne Support Team on 0800 625 3284.

For further information or enquiries please email 210208@kdc.abcs.co.nz.

Kind regards

Kaipara District Council
Unit 6 - The Hub
6 Molesworth Drive
Mangawhai 0505
www.kaipara.govt.nz

Email #165047: BC210208

Project ID: 210208
Date Sent: 2021-06-14 15:09:15
Recipient: knewman@kaipara.govt.nz
Sender: Greg Bellam
Subject: BC210208: A new email has been allocated to you
Message:

Hello Kelsey Newman,

A new email for BC210208 has been allocated to you. Please check and take appropriate action.

https://kdc.abcs.co.nz/jobs/210208/communication/?optilbox

— AlphaOne System

Email #165048: BC210208

Project ID: 210208
Date Sent: 2021-06-14 15:09:16
Recipient: wrobinson@kaipara.govt.nz
Sender: Greg Bellam
Subject: BC210208: A new email has been allocated to you
Message:

Hello Wendy Robinson,

A new email for BC210208 has been allocated to you. Please check and take appropriate action.

https://kdc.abcs.co.nz/jobs/210208/communication/?optilbox

— AlphaOne System

Email #165107: BC210208

Project ID: 210208
Date Sent: 2021-06-15 08:46:49
Recipient: ean.dawson@gjgardner.co.nz
Sender: Kelsey Newman
Subject: BC210208: 8 Sampsons Way Dargaville
Message:

Morena,

Thank you for the updated site plan. From looking at the plan the use of impermeable 'Gobi Blocks' as a border of the driveway allows compliance with the impermeable surface Rule within the District Plan. The only remaining breaches are 13.10.25 and 13.10.27 due to the turning circle.

Kelsey Newman
Planning Team
Kaipara District Council
Unit 6 - The Hub, 6 Molesworth Drive, Mangawhai 0505
P: (09) 439 3123 | E: buildingsupport@kaipara.govt.nz | W: www.kaipara.govt.nz

==========

Tena koe,

Please find following email I sent to the Planning department of KDC for your information.

*Ng**? mihi nui,*
Ean Dawson

Contracts Manager | Sudfelt Construction Ltd -
Whangarei / Kaipara Franchisee for G.J. Gardner Homes
Ph: (09) 437 5666 | Web: www.gjgardner.co.nz

[image: http://www.gjgardner.co.nz/assets/Uploads/Facebook.jpg]
[image: http://www.gjgardner.co.nz/assets/Uploads/Pinterest.jpg]
[image: https://www.gjgardner.co.nz/assets/Uploads/Insta8.jpg]

[image: http://www.gjgardner.co.nz/assets/Uploads/GJGardner.jpg]

This email, including attachments, may contain information which is confidential or subject to legal privilege or copyright. If you are not the intended recipient, please notify us immediately and then please delete all copies of this email from your system. You must not use, disseminate, distribute or reproduce this email, any attachments, or any part thereof if you are not the intended recipient.

Email communications are not secure and are not guaranteed by us to be free of unauthorised interference, error or virus. Anyone who communicates with us by email is taken to accept this risk. To the maximum extent permitted by law we are not liable for any virus or other defect in this email or in any attachment (or for any unauthorized changes made to or other interference with this email or to any attachment).

Please note that this communication does not designate an information system for the purposes of the Electronic Transactions Act 2002.

---------- Forwarded message ---------
From: Ean Dawson
Date: Mon, 14 Jun 2021 at 11:01
Subject: Re: FW: 8 Sampsons Way
To: Kelsey Newman ,
Cc: Julieanne.Mollet@gjgardner.co.nz ,
Michael Sudfelt

Kia ora Kelsey and Wendy,

Please find attached site plan with turning circles and maneuverability for the two x vehicles as well as the framed Gobi Block's around the driveway.

Please advise if this satisfies the requirement for *not *applying for RC.

*Ng**? mihi nui,*
Ean Dawson

Contracts Manager | Sudfelt Construction Ltd -
Whangarei / Kaipara Franchisee for G.J. Gardner Homes
Ph: (09) 437 5666 | Web: www.gjgardner.co.nz

[image: http://www.gjgardner.co.nz/assets/Uploads/Facebook.jpg]
[image:
http://www.gjgardner.co.nz/assets/Uploads/Pinterest.jpg]
[image:
https://www.gjgardner.co.nz/assets/Uploads/Insta8.jpg]

[image: http://www.gjgardner.co.nz/assets/Uploads/GJGardner.jpg]

This email, including attachments, may contain information which is confidential or subject to legal privilege or copyright. If you are not the intended recipient, please notify us immediately and then please delete all copies of this email from your system. You must not use, disseminate, distribute or reproduce this email, any attachments, or any part thereof if you are not the intended recipient.

Email communications are not secure and are not guaranteed by us to be free of unauthorised interference, error or virus. Anyone who communicates with us by email is taken to accept this risk. To the maximum extent permitted by law we are not liable for any virus or other defect in this email or in any attachment (or for any unauthorized changes made to or other interference with this email or to any attachment).

Please note that this communication does not designate an information system for the purposes of the Electronic Transactions Act 2002.

On Fri, 11 Jun 2021 at 14:09, Michael Sudfelt wrote:

> Thanks Kelsey,
>
> *Regards*
> *Michael Sudfelt*
>
>
>
> Franchise Owner | Sudfelt Construction Ltd -
> Whangarei / Kaipara Franchisee for G.J. Gardner Homes
> Mob: 027 527 4527 | Ph: (09) 437 5666 |
> Web: www.gjgardner.co.nz
>
> [image: http://www.gjgardner.co.nz/assets/Uploads/Facebook.jpg]
> [image:
> http://www.gjgardner.co.nz/assets/Uploads/Pinterest.jpg]

> [image:
> https://www.gjgardner.co.nz/assets/Uploads/Insta8.jpg]
>
>
>
>
> [image: http://www.gjgardner.co.nz/assets/Uploads/GJGardner.jpg]
>
>
>
>
> This email, including attachments, may contain information which is
> confidential or subject to legal privilege or copyright. If you are not the
> intended recipient, please notify us immediately and then please delete all
> copies of this email from your system. You must not use, disseminate,
> distribute or reproduce this email, any attachments, or any part thereof if
> you are not the intended recipient.
>
> Email communications are not secure and are not guaranteed by us to be
> free of unauthorised interference, error or virus. Anyone who communicates
> with us by email is taken to accept this risk. To the maximum extent
> permitted by law we are not liable for any virus or other defect in this
> email or in any attachment (or for any unauthorized changes made to or
> other interference with this email or to any attachment).
>
> Please note that this communication does not designate an information
> system for the purposes of the Electronic Transactions Act 2002.
>
>
> On Thu, Jun 10, 2021 at 10:51 AM Kelsey Newman
> wrote:
>
>> Hello there,
>>
>>
>>
>> Apologies regarding the miss information I provided, Wendy and I had a
>> chat to clarify this.
>>
>>
>>
>> The plan that you have proposed that shows a 0.5m front setback breach
>> has been looked at and the manoeuvring area is in compliance.
>>

>>
>>
>> In regards to the gobi blocks or the materials excluded from the
>> impermeable surface materials, showing these on the site plan would be
>> helpful. Council can allow permeable pavers to be used such as gobi
>> blocks. Within KDC District Plan Appendix 25A, which states in Section 6.1:
>>
>>
>>
>> - *"Permeable surfaces such as gravel, gobi-blocks or other permeable
>> paving systems can be used on driveways, parking places and pathways to
>> allow storm water to percolate directly into the underlying sub-soil". *
>>
>>
>>
>> Regarding the Deemed Permitted Marginal Activity, I double checked with
>> Wendy and unfortunately council does not process Deemed Permitted Marginal
>> Activities for Manoeuvring Beaches as it is an access issue.
>>
>>
>>
>> I hope this answers your questions and thank you for your patience.
>>
>>
>>
>> Ng? mihi nui,
>>
>>
>>
>> Kelsey
>>
>>
>>
>>
>>
>>
>> [image: KDC Logo test June 2015]
>>
>> Kelsey Newman | Graduate Planner
>>
>> Kaipara District Council, Private Bag 1001, Dargaville 0340
>>
>> Freephone: 0800 727 059 | DDI: 09 439 3123 | Cell: 021 391 351
>>
>> knewman@kaipara.govt.nz | council@kaipara.govt.nz | www.kaipara.govt.nz

>>
>>
>>
>> *Please be advised that any statements made by the Council's Resource
>> Consent Helpdesk team are for the purposes of providing general guidance
>> only, and are not to be relied upon as advice for the purposes of assessing
>> particular proposals. Recipients are advised that they need to seek their
>> own independent professional advice and make their own enquiries.
>> Furthermore, any general guidance given by the Council's Resource Consent
>> Helpdesk team does not have any bearing on the position that the Council
>> may take in its regulatory capacity.*
>>
>>
>>
>> *The Council makes no warranty, express or implied, nor assumes any legal
>> liability or responsibility for the accuracy, correctness, completeness or
>> use of any information or views communicated as part of the Resource
>> Consent Helpdesk service. To the extent permissible by law, the Council
>> expressly disclaims any liability to the applicant (under any theory of law
>> including negligence) in relation to any duty.*
>>
>>
>>
>>
>>
>>
>>
>>
>>
>>
>> *From:* Wendy Robinson
>> *Sent:* Wednesday, 2 June 2021 2:23 pm
>> *To:* Kelsey Newman
>> *Subject:* FW: FW: 8 Sampsons Way
>>
>>
>>
>> Hi Kelsey,
>>
>>
>>
>> Any chance you could check this one again before he lodges?
>>
>>
>>

>> Ng? mihi,
>>
>> Wendy
>>
>>
>>
>> *From:* Michael Sudfelt
>> *Sent:* Wednesday, 2 June 2021 12:50 PM
>> *To:* Wendy Robinson
>> *Cc:* Ean Dawson ; Julieanne Mollet
>>
>> *Subject:* Fwd: FW: 8 Sampsons Way
>>
>>
>>
>> CAUTION: This email originated from outside Kaipara District Council. Do
>> not click links or open attachments unless you recognise the sender and
>> know the content is safe.
>>
>>
>>
>> Hi Wendy,
>>
>>
>>
>> Thanks for your chat just now.
>>
>>
>>
>> To offer further clarity I've attached the plans, PIM & form 4 which this
>> all relates to.
>>
>>
>>
>> I also attach the plan we are proposing that shows a 0.5m front setback
>> breach which we believe enables for the onsite turning to work, while
>> remaining inside the impervious surfaces limits.
>>
>>
>>
>> Before we go down this track any further do you think you could have
>> someone check this to make sure we all agree the only breach with this
>> proposal is the front setback? I'd hate to carry on and then find someone
>> doesn't agree with our on site turning working..

>>
>>
>>
>> Also with regards to 'gobi blocks' or something to that effect, are you
>> able to confirm that if we were to show these on the site plan as part of
>> the driveway, will they count against our impervious surface area?
>>
>>
>>
>> And one last thought, given that the on site turning is soooo very close
>> to complying with the district plan, could we leave as is and apply for
>> "Deemed Permitted Marginal Activity"? From having a read through the
>> attached guidance I would consider that the breach is marginal, and that
>> any potential effects on any person would be 'less than minor'..
>>
>>
>>
>> Thanks heaps for your attention on this one.
>>
>>
>>
>> Kind regards,
>>
>>
>> *Regards*
>> *Michael Sudfelt*
>>
>>
>>
>> Franchise Owner | Sudfelt Construction Ltd -
>> Whangarei / Kaipara Franchisee for G.J. Gardner Homes
>> Mob: 027 527 4527 | Ph: (09) 437 5666 |
>> Web: www.gjgardner.co.nz
>>
>>
>>
>>
>>
>>
>>
>>
>>
>>
>>
>>

>> This email, including attachments, may contain information which is
>> confidential or subject to legal privilege or copyright. If you are not the
>> intended recipient, please notify us immediately and then please delete all
>> copies of this email from your system. You must not use, disseminate,
>> distribute or reproduce this email, any attachments, or any part thereof if
>> you are not the intended recipient.
>>
>> Email communications are not secure and are not guaranteed by us to be
>> free of unauthorised interference, error or virus. Anyone who communicates
>> with us by email is taken to accept this risk. To the maximum extent
>> permitted by law we are not liable for any virus or other defect in this
>> email or in any attachment (or for any unauthorized changes made to or
>> other interference with this email or to any attachment).
>>
>> Please note that this communication does not designate an information
>> system for the purposes of the Electronic Transactions Act 2002.
>>
>>
>>
>> ---------- Forwarded message ---------
>> From: *Julieanne Mollet*
>> Date: Mon, May 31, 2021 at 4:27 PM
>> Subject: Fwd: FW: 8 Sampsons Way
>> To: Michael Sudfelt
>>
>>
>>
>>
>> *Regards*
>> *Julieanne Mollet*
>>
>>
>>
>> Administrator | Sudfelt Construction Ltd -
>> Whangarei / Kaipara Franchisee for G.J. Gardner Homes
>> Ph: (09) 437 5666 | Web: www.gjgardner.co.nz
>>
>>
>>
>>
>>
>>
>>
>>
>>

>>
>>
>>
>> This email, including attachments, may contain information which is
>> confidential or subject to legal privilege or copyright. If you are not the
>> intended recipient, please notify us immediately and then please delete all
>> copies of this email from your system. You must not use, disseminate,
>> distribute or reproduce this email, any attachments, or any part thereof if
>> you are not the intended recipient.
>>
>> Email communications are not secure and are not guaranteed by us to be
>> free of unauthorised interference, error or virus. Anyone who communicates
>> with us by email is taken to accept this risk. To the maximum extent
>> permitted by law we are not liable for any virus or other defect in this
>> email or in any attachment (or for any unauthorized changes made to or
>> other interference with this email or to any attachment).
>>
>> Please note that this communication does not designate an information
>> system for the purposes of the Electronic Transactions Act 2002
>>
>>
>>
>> ---------- Forwarded message ---------
>> From: *Andy Brown | NTA*
>> Date: Mon, 31 May 2021 at 15:12
>> Subject: FW: 8 Sampsons Way
>> To: Julieanne Mollet
>> Cc: Wendy Robinson
>>
>>
>>
>> Hi Julieanne,
>>
>>
>>
>> Apologies for not getting back to you but I was concerned we had the
>> wrong information on this. Below is confirmation that I was correct and
>> the Resource Consents manager is happy to Discuss as per below.
>>
>>
>>
>>
>>
>>
>> Kind regards

>>
>> Andy
>>
>>
>>
>> *From:* Wendy Robinson
>> *Sent:* Monday, 31 May 2021 3:02 PM
>> *To:* Andy Brown | NTA
>> *Subject:* RE: 8 Sampsons Way
>>
>>
>>
>> Hi Andy,
>>
>>
>>
>> Definitely not sure what is happening on this one. Deemed Permitted
>> Boundary Activities only relate to side and rear setbacks, not front
>> setbacks. Feel free to have them call me directly.
>>
>>
>>
>> Ng? mihi,
>>
>> Wendy
>>
>>
>>
>> [image: KDC Logo test June 2015]
>>
>> Wendy Robinson | Resource Consents Manager
>>
>> Mangawhai Office: Unit 6, The Hub, 6 Molesworth Drive, Mangawhai 0505
>>
>> Kaipara District Council, Private Bag 1001, Dargaville 0340
>>
>> Freephone: 0800 727 059 | Phone: 021 579 937
>>
>> *wrobinson*@kaipara.govt.nz | council@kaipara.govt.nz |
>> www.kaipara.govt.nz
>>
>>
>>
>>

>>
>>
>>
>> *From:* Andy Brown | NTA
>> *Sent:* Monday, 31 May 2021 12:43 PM
>> *To:* Wendy Robinson
>> *Subject:* FW: 8 Sampsons Way
>>
>>
>>
>> CAUTION: This email originated from outside Kaipara District Council. Do
>> not click links or open attachments unless you recognise the sender and
>> know the content is safe.
>>
>>
>>
>> FYI for discussion if needed
>>
>>
>>
>> *From:* Andy Brown | NTA
>> *Sent:* Wednesday, 26 May 2021 10:05 AM
>> *To:* Julieanne Mollet ; Simon
>> Megchelse | NTA ; Michael Sudfelt > michael.sudfelt@gjgardner.co.nz>
>> *Subject:* RE: 8 Sampsons Way
>>
>>
>>
>> Hi Julieanne
>>
>>
>>
>> Could you please provide back a form that has no detail in the affected
>> parties section so I can complete in full? I am not in the office today
>> but can print, fill in & sign and return tomorrow when I am back in the
>> office.
>>
>>
>>
>>
>>
>>
>> Regards
>>
>> Andy

>>
>>
>>
>>
>>
>> *From:* Julieanne Mollet
>> *Sent:* Wednesday, 26 May 2021 9:23 AM
>> *To:* Simon Megchelse | NTA ; Andy Brown |
>> NTA ; Michael Sudfelt > michael.sudfelt@gjgardner.co.nz>
>> *Subject:* Fwd: 8 Sampsons Way
>>
>>
>>
>> Hi Andy and Simon
>>
>>
>>
>> Just following up on the below email. We are keen to get this submitted
>> to Council as soon as possible for our client. Would you be able to let us
>> know when we can expect this back? Or did you have any queries on the
>> details we had sent through?
>>
>>
>> *Regards*
>> *Julieanne Mollet*
>>
>>
>>
>> Administrator | Sudfelt Construction Ltd -
>> Whangarei / Kaipara Franchisee for G.J. Gardner Homes
>> Ph: (09) 437 5666 | Web: www.gjgardner.co.nz
>>
>> [image: Image removed by sender.]
>> [image: Image
>> removed by sender.] [image:
>> Image removed by sender.]
>>
>>
>>
>>
>> [image: Image removed by sender.]
>>
>>
>>

>> This email, including attachments, may contain information which is
>> confidential or subject to legal privilege or copyright. If you are not the
>> intended recipient, please notify us immediately and then please delete all
>> copies of this email from your system. You must not use, disseminate,
>> distribute or reproduce this email, any attachments, or any part thereof if
>> you are not the intended recipient.
>>
>> Email communications are not secure and are not guaranteed by us to be
>> free of unauthorised interference, error or virus. Anyone who communicates
>> with us by email is taken to accept this risk. To the maximum extent
>> permitted by law we are not liable for any virus or other defect in this
>> email or in any attachment (or for any unauthorized changes made to or
>> other interference with this email or to any attachment).
>>
>> Please note that this communication does not designate an information
>> system for the purposes of the Electronic Transactions Act 2002
>>
>>
>>
>> ---------- Forwarded message ---------
>> From: *Julieanne Mollet*
>> Date: Thu, 20 May 2021 at 09:17
>> Subject: Fwd: 8 Sampsons Way
>> To: ,
>> Cc: Michael Sudfelt
>>
>>
>>
>> Hi Andy and Simon
>>
>>
>>
>> Further to the below email correspondence with Michael, please see
>> attached the Affected Party Deemed Permitted Boundary Activity form and
>> plan for signoff. If you can please sign and return both for us, that
>> would be great.
>>
>>
>> *Regards*
>> *Julieanne Mollet*
>>
>>
>>
>> Administrator | Sudfelt Construction Ltd -

>> Whangarei / Kaipara Franchisee for G.J. Gardner Homes
>> Ph: (09) 437 5666 | Web: www.gjgardner.co.nz
>>
>> [image: Image removed by sender.]
>> [image: Image
>> removed by sender.] [image:
>> Image removed by sender.]
>>
>>
>>
>>
>> [image: Image removed by sender.]
>>
>>
>>
>> This email, including attachments, may contain information which is
>> confidential or subject to legal privilege or copyright. If you are not the
>> intended recipient, please notify us immediately and then please delete all
>> copies of this email from your system. You must not use, disseminate,
>> distribute or reproduce this email, any attachments, or any part thereof if
>> you are not the intended recipient.
>>
>> Email communications are not secure and are not guaranteed by us to be
>> free of unauthorised interference, error or virus. Anyone who communicates
>> with us by email is taken to accept this risk. To the maximum extent
>> permitted by law we are not liable for any virus or other defect in this
>> email or in any attachment (or for any unauthorized changes made to or
>> other interference with this email or to any attachment).
>>
>> Please note that this communication does not designate an information
>> system for the purposes of the Electronic Transactions Act 2002
>>
>>
>>
>> ---------- Forwarded message ---------
>>
>> From: *Michael Sudfelt*
>> Date: Tue, May 18, 2021 at 9:10 AM
>> Subject: Re: 8 Sampsons Way
>> To: Andy Brown | NTA
>> Cc: Simon Megchelse | NTA
>>
>>
>>

>> Thanks heaps Andy,
>>
>>
>>
>> The KDC planner had asked us to complete a 'deemed permitted boundary
>> activity' form and have that signed off by roading, and then they would
>> consider that before approving. If you're happy I'll get that completed and
>> through for your sign off as the 'affected party', and then back to the
>> planners for sign off?
>>
>>
>>
>> Thank you!
>>
>>
>> *Regards*
>> *Michael Sudfelt*
>>
>>
>>
>> Franchise Owner | Sudfelt Construction Ltd -
>> Whangarei / Kaipara Franchisee for G.J. Gardner Homes
>> Mob: 027 527 4527 | Ph: (09) 437 5666 |
>> Web: www.gjgardner.co.nz
>>
>> [image: Image removed by sender.]
>> [image: Image
>> removed by sender.] [image:
>> Image removed by sender.]
>>
>>
>>
>>
>> [image: Image removed by sender.]
>>
>>
>>
>> This email, including attachments, may contain information which is
>> confidential or subject to legal privilege or copyright. If you are not the
>> intended recipient, please notify us immediately and then please delete all
>> copies of this email from your system. You must not use, disseminate,
>> distribute or reproduce this email, any attachments, or any part thereof if
>> you are not the intended recipient.
>>

>> Email communications are not secure and are not guaranteed by us to be
>> free of unauthorised interference, error or virus. Anyone who communicates
>> with us by email is taken to accept this risk. To the maximum extent
>> permitted by law we are not liable for any virus or other defect in this
>> email or in any attachment (or for any unauthorized changes made to or
>> other interference with this email or to any attachment).
>>
>> Please note that this communication does not designate an information
>> system for the purposes of the Electronic Transactions Act 2002.
>>
>>
>>
>>
>>
>> On Tue, May 18, 2021 at 9:04 AM Andy Brown | NTA
>> wrote:
>>
>> Good morning Simon and Michael,
>>
>>
>>
>> I have no objection to the proposal as pointed out in the bullet points
>> from Simon below it does not interfere with future use ect and would not
>> look significantly out of place.
>>
>>
>>
>> Please note however this response does not sever as approval for your
>> resource consent application as the proposed changes are not in line with
>> the district plan requirements so this becomes a matter for the KDC
>> resource consents team to work through with the applicant.
>>
>>
>>
>> Kind regards
>>
>> Andy Brown
>>
>>
>>
>> *From:* Simon Megchelse | NTA
>> *Sent:* Tuesday, 18 May 2021 8:59 AM
>> *To:* Andy Brown | NTA
>> *Cc:* michael.sudfelt@gjgardner.co.nz

>> *Subject:* FW: 8 Sampsons Way
>>
>>
>>
>> Good morning Andy
>>
>>
>>
>> As discussed yesterday please assess this request from Michael at G.J
>> Gardener and advise KDC's/NTA's considerations as an affected party,
>> typically RCA's can reasonably support reduced boundary set back of
>> building from road front boundary subject to;
>>
>> ? Sight Lines for motorists not being compromised
>>
>> ? Will not impact any upgrade to roads formation
>>
>> ? Not a habitable room proposed to be set closer to the road
>> boundary (i.e. garage okay)
>>
>>
>>
>> As the asset owner could you please reply back to Michael, this will
>> allow G.J's to progress with any change to their Planning/Building consent
>> application.
>>
>>
>>
>> Regards
>>
>>
>>
>> *Simon Megchelse*
>>
>> *Road Corridor Coordinator *
>>
>> *Whangarei District Council **| *Forum North | Private Bag 9023,
>> Whangarei 0148 | www.wdc.govt.nz
>>
>> *P **09 430 4200* | *DDI **09 4703031* | *M** 0272703820* | *E:*
>> *simon.megchelse@wdc.govt.nz*
>>
>> [image: NTA Horizontal long - full colour]
>>

>>
>>
>>
>>
>>
>>
>>
>>
>> *From:* Michael Sudfelt
>> *Sent:* Monday, May 17, 2021 3:11 PM
>> *To:* Simon Megchelse | NTA
>> *Subject:* 8 Sampsons Way
>>
>>
>>
>> Hi Simon,
>>
>>
>>
>> As discussed this afternoon, we are having trouble complying with the
>> Kaipara District plan. To achieve suitable on site turning for this modest
>> 3 bedroom home we are finding that we are going over the allowable
>> impervious surface restrictions.
>>
>>
>>
>> To stay within this requirement we are proposing that we bring the house
>> forward to 4.0m off the road front boundary. Please see attached copy of
>> proposed site plan.
>>
>>
>>
>> I've taken a screenshot from google maps which shows the 'way' which
>> might be of some assistance.
>>
>>
>>
>> Please let me know if you have any questions. If you think this is
>> something you would be happy to support, could you please let me know and I
>> will get the form the KDC council will want completed to support our
>> application.
>>
>>
>>

>> Thank heaps,
>>
>>
>>
>>
>>
>> *Regards*
>> *Michael Sudfelt*
>>
>>
>>
>> Franchise Owner | Sudfelt Construction Ltd -
>> Whangarei / Kaipara Franchisee for G.J. Gardner Homes
>> Mob: 027 527 4527 | Ph: (09) 437 5666 |
>> Web: www.gjgardner.co.nz
>>
>>
>>
>>
>>
>>
>>
>>
>>
>>
>>
>>
>> This email, including attachments, may contain information which is
>> confidential or subject to legal privilege or copyright. If you are not the
>> intended recipient, please notify us immediately and then please delete all
>> copies of this email from your system. You must not use, disseminate,
>> distribute or reproduce this email, any attachments, or any part thereof if
>> you are not the intended recipient.
>>
>> Email communications are not secure and are not guaranteed by us to be
>> free of unauthorised interference, error or virus. Anyone who communicates
>> with us by email is taken to accept this risk. To the maximum extent
>> permitted by law we are not liable for any virus or other defect in this
>> email or in any attachment (or for any unauthorized changes made to or
>> other interference with this email or to any attachment).
>>
>> Please note that this communication does not designate an information
>> system for the purposes of the Electronic Transactions Act 2002.
>>
>>

>>
>> The Northland Transportation Alliance is a partnership between all four
>> councils within Northland and Waka Kotahi (NZTA). The information contained
>> within this email may be confidential. Therefore, if you have received this
>> in error, you should delete it immediately and advise the sender noting
>> that information contained within this communication should not be used or
>> transmitted in any format.
>>
>> The Northland Transportation Alliance is a partnership between all four
>> councils within Northland and Waka Kotahi (NZTA). The information contained
>> within this email may be confidential. Therefore, if you have received this
>> in error, you should delete it immediately and advise the sender noting
>> that information contained within this communication should not be used or
>> transmitted in any format.
>>
>> The Northland Transportation Alliance is a partnership between all four
>> councils within Northland and Waka Kotahi (NZTA). The information contained
>> within this email may be confidential. Therefore, if you have received this
>> in error, you should delete it immediately and advise the sender noting
>> that information contained within this communication should not be used or
>> transmitted in any format.
>>
>

REJECTED ATTACHMENT(S):
Note: The listed file(s) below were rejected because they were not in PDF format.
- image001.jpg
- image002.jpg
- image003.jpg
- image004.jpg
- image005.png
- image006.png
- image007.png
- image008.jpg
- image009.jpg
- image010.jpg

Email #165120: BC210208

Project ID: 210208
Date Sent: 2021-06-15 09:30:09
Recipient: ean.dawson@gjgardner.co.nz
Sender: AlphaOne System
Subject: RE: Re: BC210208: 8 Sampsons Way Dargaville
Message:

Hello

Thank you for your message regarding your application with Kaipara District Council. This is an automated response to confirm your message has been received by the assigned officer for review. You can expect a response within 5 working days.

For further information or enquiries please email 210208@kdc.abcs.co.nz.

Kind regards

Kaipara District Council
Unit 6 - The Hub
6 Molesworth Drive
Mangawhai 0505
www.kaipara.govt.nz

Email #165121: BC210208

Project ID: 210208
Date Sent: 2021-06-15 09:36:23
Recipient: ean.dawson@gjgardner.co.nz
Sender: Kelsey Newman
Subject: BC210208: 8 Sampsons Way Dargaville
Message:

Morena,

Thank you for your quick response.

I view this turning circle as a breach. To confirm compliance with the KDC Appendix 25C, please provide a clear drawing showing the 8m radius and maneuvering tracking curves.

Kelsey Newman
Planning Team
Kaipara District Council
Unit 6 - The Hub, 6 Molesworth Drive, Mangawhai 0505
P: (09) 439 3123 | E: buildingsupport@kaipara.govt.nz | W: www.kaipara.govt.nz

==========

Morena Kelsey,

I had indicated the turning circles of both vehicles on the drawings that work within the driveway and Gobi blocks, The vehicles tracking is as per AS/NZS 2890.1:2004 (Off Street Car Parking) - B99 Vehicle (Realistic min radius) (2004) without any allowances for lock to lock time (i.e. vehicles are turning lock to lock while stationary).

So I believe that this should suffice planning requirements?

*Ng**? mihi nui,*
Ean Dawson

Contracts Manager | Sudfelt Construction Ltd -
Whangarei / Kaipara Franchisee for G.J. Gardner Homes
Ph: (09) 437 5666 | Web: www.gjgardner.co.nz

[image: http://www.gjgardner.co.nz/assets/Uploads/Facebook.jpg]
[image:
http://www.gjgardner.co.nz/assets/Uploads/Pinterest.jpg]
[image:
https://www.gjgardner.co.nz/assets/Uploads/Insta8.jpg]

[image: http://www.gjgardner.co.nz/assets/Uploads/GJGardner.jpg]

This email, including attachments, may contain information which is confidential or subject to legal privilege or copyright. If you are not the intended recipient, please notify us immediately and then please delete all copies of this email from your system. You must not use, disseminate, distribute or reproduce this email, any attachments, or any part thereof if you are not the intended recipient.

Email communications are not secure and are not guaranteed by us to be free of unauthorised interference, error or virus. Anyone who communicates with us by email is taken to accept this risk. To the maximum extent permitted by law we are not liable for any virus or other defect in this email or in any attachment (or for any unauthorized changes made to or other interference with this email or to any attachment).

Please note that this communication does not designate an information system for the purposes of the Electronic Transactions Act 2002.

On Tue, 15 Jun 2021 at 08:46, Kaipara District Council wrote:

> Morena,
>
> Thank you for the updated site plan. From looking at the plan the use of
> impermeable 'Gobi Blocks' as a border of the driveway allows compliance
> with the impermeable surface Rule within the District Plan. The only
> remaining breaches are 13.10.25 and 13.10.27 due to the turning circle.
>
>
> Kelsey Newman
> Planning Team
> Kaipara District Council
> Unit 6 - The Hub, 6 Molesworth Drive, Mangawhai 0505
> P: (09) 439 3123 | E: buildingsupport@kaipara.govt.nz | W:
> www.kaipara.govt.nz

>
>
>
>
> ==>
> Tena koe,
>
> Please find following email I sent to the Planning department of KDC for
> your information.
>
> *Ng**? mihi nui,*
> *Ean Dawson*
>
> Contracts Manager | Sudfelt Construction Ltd -
> Whangarei / Kaipara Franchisee for G.J. Gardner Homes
> Ph: (09) 437 5666 | Web: www.gjgardner.co.nz
>
> [image: http://www.gjgardner.co.nz/assets/Uploads/Facebook.jpg]
> [image:
> http://www.gjgardner.co.nz/assets/Uploads/Pinterest.jpg]
> [image:
> https://www.gjgardner.co.nz/assets/Uploads/Insta8.jpg]
>
>
> [image: http://www.gjgardner.co.nz/assets/Uploads/GJGardner.jpg]
>
>
> This email, including attachments, may contain information which is
> confidential or subject to legal privilege or copyright. If you are not the
> intended recipient, please notify us immediately and then please delete all
> copies of this email from your system. You must not use, disseminate,
> distribute or reproduce this email, any attachments, or any part thereof if
> you are not the intended recipient.
>
> Email communications are not secure and are not guaranteed by us to be free
> of unauthorised interference, error or virus. Anyone who communicates with
> us by email is taken to accept this risk. To the maximum extent permitted
> by law we are not liable for any virus or other defect in this email or in
> any attachment (or for any unauthorized changes made to or other
> interference with this email or to any attachment).
>
> Please note that this communication does not designate an information
> system for the purposes of the Electronic Transactions Act 2002.
>

> ---------- Forwarded message ---------
> From: Ean Dawson
> Date: Mon, 14 Jun 2021 at 11:01
> Subject: Re: FW: 8 Sampsons Way
> To: Kelsey Newman ,
> Cc: Julieanne.Mollet@gjgardner.co.nz ,
> Michael Sudfelt
>
> Kia ora Kelsey and Wendy,
>
> Please find attached site plan with turning circles and maneuverability for
> the two x vehicles as well as the framed Gobi Block's around the driveway.
>
> Please advise if this satisfies the requirement for *not *applying for RC.
>
> *Ng**? mihi nui,*
> *Ean Dawson*
>
> Contracts Manager | Sudfelt Construction Ltd -
> Whangarei / Kaipara Franchisee for G.J. Gardner Homes
> Ph: (09) 437 5666 | Web: www.gjgardner.co.nz
>
> [image: http://www.gjgardner.co.nz/assets/Uploads/Facebook.jpg]
> [image:
> http://www.gjgardner.co.nz/assets/Uploads/Pinterest.jpg]
> [image:
> https://www.gjgardner.co.nz/assets/Uploads/Insta8.jpg]
>
>
> [image: http://www.gjgardner.co.nz/assets/Uploads/GJGardner.jpg]
>
>
> This email, including attachments, may contain information which is
> confidential or subject to legal privilege or copyright. If you are not the
> intended recipient, please notify us immediately and then please delete all
> copies of this email from your system. You must not use, disseminate,
> distribute or reproduce this email, any attachments, or any part thereof if
> you are not the intended recipient.
>
> Email communications are not secure and are not guaranteed by us to be free
> of unauthorised interference, error or virus. Anyone who communicates with
> us by email is taken to accept this risk. To the maximum extent permitted
> by law we are not liable for any virus or other defect in this email or in
> any attachment (or for any unauthorized changes made to or other

> interference with this email or to any attachment).
>
> Please note that this communication does not designate an information
> system for the purposes of the Electronic Transactions Act 2002.
>
> On Fri, 11 Jun 2021 at 14:09, Michael Sudfelt
> wrote:
>
> > Thanks Kelsey,
> >
> > *Regards*
> > *Michael Sudfelt*
> >
> >
> >
> > Franchise Owner | Sudfelt Construction Ltd -
> > Whangarei / Kaipara Franchisee for G.J. Gardner Homes
> > Mob: 027 527 4527 | Ph: (09) 437 5666 |
> > Web: www.gjgardner.co.nz
> >
> > [image: http://www.gjgardner.co.nz/assets/Uploads/Facebook.jpg]
> > [image:
> > http://www.gjgardner.co.nz/assets/Uploads/Pinterest.jpg]
> > [image:
> > https://www.gjgardner.co.nz/assets/Uploads/Insta8.jpg]
> >
> >
> >
> >
> > [image: http://www.gjgardner.co.nz/assets/Uploads/GJGardner.jpg]
> >
> >
> >
> >
> > This email, including attachments, may contain information which is
> > confidential or subject to legal privilege or copyright. If you are not
> the
> > intended recipient, please notify us immediately and then please delete
> all
> > copies of this email from your system. You must not use, disseminate,
> > distribute or reproduce this email, any attachments, or any part thereof
> if
> > you are not the intended recipient.
> >

> > Email communications are not secure and are not guaranteed by us to be
> > free of unauthorised interference, error or virus. Anyone who
> communicates
> > with us by email is taken to accept this risk. To the maximum extent
> > permitted by law we are not liable for any virus or other defect in this
> > email or in any attachment (or for any unauthorized changes made to or
> > other interference with this email or to any attachment).
> >
> > Please note that this communication does not designate an information
> > system for the purposes of the Electronic Transactions Act 2002.
> >
> >
> > On Thu, Jun 10, 2021 at 10:51 AM Kelsey Newman
> > wrote:
> >
> >> Hello there,
> >>
> >>
> >>
> >> Apologies regarding the miss information I provided, Wendy and I had a
> >> chat to clarify this.
> >>
> >>
> >>
> >> The plan that you have proposed that shows a 0.5m front setback breach
> >> has been looked at and the manoeuvring area is in compliance.
> >>
> >>
> >>
> >> In regards to the gobi blocks or the materials excluded from the
> >> impermeable surface materials, showing these on the site plan would be
> >> helpful. Council can allow permeable pavers to be used such as gobi
> >> blocks. Within KDC District Plan Appendix 25A, which states in Section
> 6.1:
> >>
> >>
> >>
> >> - *"Permeable surfaces such as gravel, gobi-blocks or other permeable
> >> paving systems can be used on driveways, parking places and pathways to
> >> allow storm water to percolate directly into the underlying sub-soil". *
> >>
> >>
> >>
> >> Regarding the Deemed Permitted Marginal Activity, I double checked with

> >> Wendy and unfortunately council does not process Deemed Permitted
> Marginal
> >> Activities for Manoeuvring Beaches as it is an access issue.
> >>
> >>
> >>
> >> I hope this answers your questions and thank you for your patience.
> >>
> >>
> >>
> >> Ng? mihi nui,
> >>
> >>
> >>
> >> Kelsey
> >>
> >>
> >>
> >>
> >>
> >> [image: KDC Logo test June 2015]
> >>
> >> Kelsey Newman | Graduate Planner
> >>
> >> Kaipara District Council, Private Bag 1001, Dargaville 0340
> >>
> >> Freephone: 0800 727 059 | DDI: 09 439 3123 | Cell: 021 391 351
> >>
> >> knewman@kaipara.govt.nz | council@kaipara.govt.nz | www.kaipara.govt.nz
> >>
> >>
> >>
> >> *Please be advised that any statements made by the Council's Resource
> >> Consent Helpdesk team are for the purposes of providing general guidance
> >> only, and are not to be relied upon as advice for the purposes of
> assessing
> >> particular proposals. Recipients are advised that they need to seek
> their
> >> own independent professional advice and make their own enquiries.
> >> Furthermore, any general guidance given by the Council's Resource
> Consent
> >> Helpdesk team does not have any bearing on the position that the Council
> >> may take in its regulatory capacity.*
> >>

> >>
> >>
> >> *The Council makes no warranty, express or implied, nor assumes any
> legal
> >> liability or responsibility for the accuracy, correctness, completeness
> or
> >> use of any information or views communicated as part of the Resource
> >> Consent Helpdesk service. To the extent permissible by law, the Council
> >> expressly disclaims any liability to the applicant (under any theory of
> law
> >> including negligence) in relation to any duty.*
> >>
> >>
> >>
> >>
> >>
> >>
> >>
> >>
> >>
> >> *From:* Wendy Robinson
> >> *Sent:* Wednesday, 2 June 2021 2:23 pm
> >> *To:* Kelsey Newman
> >> *Subject:* FW: FW: 8 Sampsons Way
> >>
> >>
> >>
> >> Hi Kelsey,
> >>
> >>
> >>
> >> Any chance you could check this one again before he lodges?
> >>
> >>
> >>
> >> Ng? mihi,
> >>
> >> Wendy
> >>
> >>
> >>
> >> *From:* Michael Sudfelt
> >> *Sent:* Wednesday, 2 June 2021 12:50 PM
> >> *To:* Wendy Robinson

> >> *Cc:* Ean Dawson ; Julieanne Mollet
> >>
> >> *Subject:* Fwd: FW: 8 Sampsons Way
> >>
> >>
> >>
> >> CAUTION: This email originated from outside Kaipara District Council. Do
> >> not click links or open attachments unless you recognise the sender and
> >> know the content is safe.
> >>
> >>
> >>
> >> Hi Wendy,
> >>
> >>
> >>
> >> Thanks for your chat just now.
> >>
> >>
> >>
> >> To offer further clarity I've attached the plans, PIM & form 4 which
> this
> >> all relates to.
> >>
> >>
> >>
> >> I also attach the plan we are proposing that shows a 0.5m front setback
> >> breach which we believe enables for the onsite turning to work, while
> >> remaining inside the impervious surfaces limits.
> >>
> >>
> >>
> >> Before we go down this track any further do you think you could have
> >> someone check this to make sure we all agree the only breach with this
> >> proposal is the front setback? I'd hate to carry on and then find
> someone
> >> doesn't agree with our on site turning working..
> >>
> >>
> >>
> >> Also with regards to 'gobi blocks' or something to that effect, are you
> >> able to confirm that if we were to show these on the site plan as part
> of
> >> the driveway, will they count against our impervious surface area?

> >>
> >>
> >>
> >> And one last thought, given that the on site turning is soooo very close
> >> to complying with the district plan, could we leave as is and apply for
> >> "Deemed Permitted Marginal Activity"? From having a read through the
> >> attached guidance I would consider that the breach is marginal, and that
> >> any potential effects on any person would be 'less than minor'..
> >>
> >>
> >>
> >> Thanks heaps for your attention on this one.
> >>
> >>
> >>
> >> Kind regards,
> >>
> >>
> >> *Regards*
> >> *Michael Sudfelt*
> >>
> >>
> >>
> >> Franchise Owner | Sudfelt Construction Ltd -
> >> Whangarei / Kaipara Franchisee for G.J. Gardner Homes
> >> Mob: 027 527 4527 | Ph: (09) 437 5666 |
> >> Web: www.gjgardner.co.nz
> >>
> >>
> >>
> >>
> >>
> >>
> >>
> >>
> >>
> >>
> >>
> >>
> >> This email, including attachments, may contain information which is
> >> confidential or subject to legal privilege or copyright. If you are not
> the
> >> intended recipient, please notify us immediately and then please delete
> all
> >> copies of this email from your system. You must not use, disseminate,

> >> distribute or reproduce this email, any attachments, or any part
> thereof if
> >> you are not the intended recipient.
> >>
> >> Email communications are not secure and are not guaranteed by us to be
> >> free of unauthorised interference, error or virus. Anyone who
> communicates
> >> with us by email is taken to accept this risk. To the maximum extent
> >> permitted by law we are not liable for any virus or other defect in this
> >> email or in any attachment (or for any unauthorized changes made to or
> >> other interference with this email or to any attachment).
> >>
> >> Please note that this communication does not designate an information
> >> system for the purposes of the Electronic Transactions Act 2002.
> >>
> >>
> >>
> >> ---------- Forwarded message ---------
> >> From: *Julieanne Mollet*
> >> Date: Mon, May 31, 2021 at 4:27 PM
> >> Subject: Fwd: FW: 8 Sampsons Way
> >> To: Michael Sudfelt
> >>
> >>
> >>
> >>
> >> *Regards*
> >> *Julieanne Mollet*
> >>
> >>
> >>
> >> Administrator | Sudfelt Construction Ltd -
> >> Whangarei / Kaipara Franchisee for G.J. Gardner Homes
> >> Ph: (09) 437 5666 | Web: www.gjgardner.co.nz
> >>
> >>
> >>
> >>
> >>
> >>
> >>
> >>
> >>
> >>

> >>
> >> This email, including attachments, may contain information which is
> >> confidential or subject to legal privilege or copyright. If you are not
> the
> >> intended recipient, please notify us immediately and then please delete
> all
> >> copies of this email from your system. You must not use, disseminate,
> >> distribute or reproduce this email, any attachments, or any part
> thereof if
> >> you are not the intended recipient.
> >>
> >> Email communications are not secure and are not guaranteed by us to be
> >> free of unauthorised interference, error or virus. Anyone who
> communicates
> >> with us by email is taken to accept this risk. To the maximum extent
> >> permitted by law we are not liable for any virus or other defect in this
> >> email or in any attachment (or for any unauthorized changes made to or
> >> other interference with this email or to any attachment).
> >>
> >> Please note that this communication does not designate an information
> >> system for the purposes of the Electronic Transactions Act 2002
> >>
> >>
> >>
> >> ---------- Forwarded message ---------
> >> From: *Andy Brown | NTA*
> >> Date: Mon, 31 May 2021 at 15:12
> >> Subject: FW: 8 Sampsons Way
> >> To: Julieanne Mollet
> >> Cc: Wendy Robinson
> >>
> >>
> >>
> >> Hi Julieanne,
> >>
> >>
> >>
> >> Apologies for not getting back to you but I was concerned we had the
> >> wrong information on this. Below is confirmation that I was correct and
> >> the Resource Consents manager is happy to Discuss as per below.
> >>
> >>
> >>
> >>

> >>
> >> Kind regards
> >>
> >> Andy
> >>
> >>
> >>
> >> *From:* Wendy Robinson
> >> *Sent:* Monday, 31 May 2021 3:02 PM
> >> *To:* Andy Brown | NTA
> >> *Subject:* RE: 8 Sampsons Way
> >>
> >>
> >>
> >> Hi Andy,
> >>
> >>
> >>
> >> Definitely not sure what is happening on this one. Deemed Permitted
> >> Boundary Activities only relate to side and rear setbacks, not front
> >> setbacks. Feel free to have them call me directly.
> >>
> >>
> >>
> >> Ng? mihi,
> >>
> >> Wendy
> >>
> >>
> >>
> >> [image: KDC Logo test June 2015]
> >>
> >> Wendy Robinson | Resource Consents Manager
> >>
> >> Mangawhai Office: Unit 6, The Hub, 6 Molesworth Drive, Mangawhai 0505
> >>
> >> Kaipara District Council, Private Bag 1001, Dargaville 0340
> >>
> >> Freephone: 0800 727 059 | Phone: 021 579 937
> >>
> >> *wrobinson*@kaipara.govt.nz | council@kaipara.govt.nz |
> >> www.kaipara.govt.nz
> >>
> >>

> >>
> >>
> >>
> >>
> >>
> >> *From:* Andy Brown | NTA
> >> *Sent:* Monday, 31 May 2021 12:43 PM
> >> *To:* Wendy Robinson
> >> *Subject:* FW: 8 Sampsons Way
> >>
> >>
> >>
> >> CAUTION: This email originated from outside Kaipara District Council. Do
> >> not click links or open attachments unless you recognise the sender and
> >> know the content is safe.
> >>
> >>
> >>
> >> FYI for discussion if needed
> >>
> >>
> >>
> >> *From:* Andy Brown | NTA
> >> *Sent:* Wednesday, 26 May 2021 10:05 AM
> >> *To:* Julieanne Mollet ; Simon
> >> Megchelse | NTA ; Michael Sudfelt
> > michael.sudfelt@gjgardner.co.nz>
> >> *Subject:* RE: 8 Sampsons Way
> >>
> >>
> >>
> >> Hi Julieanne
> >>
> >>
> >>
> >> Could you please provide back a form that has no detail in the affected
> >> parties section so I can complete in full? I am not in the office today
> >> but can print, fill in & sign and return tomorrow when I am back in the
> >> office.
> >>
> >>
> >>
> >>
> >>

> >> Regards
> >>
> >> Andy
> >>
> >>
> >>
> >>
> >>
> >> *From:* Julieanne Mollet
> >> *Sent:* Wednesday, 26 May 2021 9:23 AM
> >> *To:* Simon Megchelse | NTA ; Andy Brown |
> >> NTA ; Michael Sudfelt
> > michael.sudfelt@gjgardner.co.nz>
> >> *Subject:* Fwd: 8 Sampsons Way
> >>
> >>
> >>
> >> Hi Andy and Simon
> >>
> >>
> >>
> >> Just following up on the below email. We are keen to get this submitted
> >> to Council as soon as possible for our client. Would you be able to let
> us
> >> know when we can expect this back? Or did you have any queries on the
> >> details we had sent through?
> >>
> >>
> >> *Regards*
> >> *Julieanne Mollet*
> >>
> >>
> >>
> >> Administrator | Sudfelt Construction Ltd -
> >> Whangarei / Kaipara Franchisee for G.J. Gardner Homes
> >> Ph: (09) 437 5666 | Web: www.gjgardner.co.nz
> >>
> >> [image: Image removed by sender.]
> >> [image: Image
> >> removed by sender.] [image:
> >> Image removed by sender.]
> >>
> >>
> >>

> >>
> >> [image: Image removed by sender.]
> >>
> >>
> >>
> >> This email, including attachments, may contain information which is
> >> confidential or subject to legal privilege or copyright. If you are not
> the
> >> intended recipient, please notify us immediately and then please delete
> all
> >> copies of this email from your system. You must not use, disseminate,
> >> distribute or reproduce this email, any attachments, or any part
> thereof if
> >> you are not the intended recipient.
> >>
> >> Email communications are not secure and are not guaranteed by us to be
> >> free of unauthorised interference, error or virus. Anyone who
> communicates
> >> with us by email is taken to accept this risk. To the maximum extent
> >> permitted by law we are not liable for any virus or other defect in this
> >> email or in any attachment (or for any unauthorized changes made to or
> >> other interference with this email or to any attachment).
> >>
> >> Please note that this communication does not designate an information
> >> system for the purposes of the Electronic Transactions Act 2002
> >>
> >>
> >>
> >> ---------- Forwarded message ---------
> >> From: *Julieanne Mollet*
> >> Date: Thu, 20 May 2021 at 09:17
> >> Subject: Fwd: 8 Sampsons Way
> >> To: ,
> >> Cc: Michael Sudfelt
> >>
> >>
> >>
> >> Hi Andy and Simon
> >>
> >>
> >>
> >> Further to the below email correspondence with Michael, please see
> >> attached the Affected Party Deemed Permitted Boundary Activity form and
> >> plan for signoff. If you can please sign and return both for us, that

> >> would be great.
> >>
> >>
> >> *Regards*
> >> *Julieanne Mollet*
> >>
> >>
> >>
> >> Administrator | Sudfelt Construction Ltd -
> >> Whangarei / Kaipara Franchisee for G.J. Gardner Homes
> >> Ph: (09) 437 5666 | Web: www.gjgardner.co.nz
> >>
> >> [image: Image removed by sender.]
> >> [image: Image
> >> removed by sender.] [image:
> >> Image removed by sender.]
> >>
> >>
> >>
> >>
> >> [image: Image removed by sender.]
> >>
> >>
> >>
> >> This email, including attachments, may contain information which is
> >> confidential or subject to legal privilege or copyright. If you are not
> the
> >> intended recipient, please notify us immediately and then please delete
> all
> >> copies of this email from your system. You must not use, disseminate,
> >> distribute or reproduce this email, any attachments, or any part
> thereof if
> >> you are not the intended recipient.
> >>
> >> Email communications are not secure and are not guaranteed by us to be
> >> free of unauthorised interference, error or virus. Anyone who
> communicates
> >> with us by email is taken to accept this risk. To the maximum extent
> >> permitted by law we are not liable for any virus or other defect in this
> >> email or in any attachment (or for any unauthorized changes made to or
> >> other interference with this email or to any attachment).
> >>
> >> Please note that this communication does not designate an information
> >> system for the purposes of the Electronic Transactions Act 2002

> >>
> >>
> >>
> >> ---------- Forwarded message ---------
> >>
> >> From: *Michael Sudfelt*
> >> Date: Tue, May 18, 2021 at 9:10 AM
> >> Subject: Re: 8 Sampsons Way
> >> To: Andy Brown | NTA
> >> Cc: Simon Megchelse | NTA
> >>
> >>
> >>
> >> Thanks heaps Andy,
> >>
> >>
> >>
> >> The KDC planner had asked us to complete a 'deemed permitted boundary
> >> activity' form and have that signed off by roading, and then they would
> >> consider that before approving. If you're happy I'll get that completed
> and
> >> through for your sign off as the 'affected party', and then back to the
> >> planners for sign off?
> >>
> >>
> >>
> >> Thank you!
> >>
> >>
> >> *Regards*
> >> *Michael Sudfelt*
> >>
> >>
> >>
> >> Franchise Owner | Sudfelt Construction Ltd -
> >> Whangarei / Kaipara Franchisee for G.J. Gardner Homes
> >> Mob: 027 527 4527 | Ph: (09) 437 5666 |
> >> Web: www.gjgardner.co.nz
> >>
> >> [image: Image removed by sender.]
> >> [image: Image
> >> removed by sender.] [image:
> >> Image removed by sender.]
> >>

> >>
> >>
> >>
> >> [image: Image removed by sender.]
> >>
> >>
> >>
> >> This email, including attachments, may contain information which is
> >> confidential or subject to legal privilege or copyright. If you are not
> the
> >> intended recipient, please notify us immediately and then please delete
> all
> >> copies of this email from your system. You must not use, disseminate,
> >> distribute or reproduce this email, any attachments, or any part
> thereof if
> >> you are not the intended recipient.
> >>
> >> Email communications are not secure and are not guaranteed by us to be
> >> free of unauthorised interference, error or virus. Anyone who
> communicates
> >> with us by email is taken to accept this risk. To the maximum extent
> >> permitted by law we are not liable for any virus or other defect in this
> >> email or in any attachment (or for any unauthorized changes made to or
> >> other interference with this email or to any attachment).
> >>
> >> Please note that this communication does not designate an information
> >> system for the purposes of the Electronic Transactions Act 2002.
> >>
> >>
> >>
> >>
> >>
> >> On Tue, May 18, 2021 at 9:04 AM Andy Brown | NTA
> >> wrote:
> >>
> >> Good morning Simon and Michael,
> >>
> >>
> >>
> >> I have no objection to the proposal as pointed out in the bullet points
> >> from Simon below it does not interfere with future use ect and would not
> >> look significantly out of place.
> >>
> >>

> >>
> >> Please note however this response does not sever as approval for your
> >> resource consent application as the proposed changes are not in line
> with
> >> the district plan requirements so this becomes a matter for the KDC
> >> resource consents team to work through with the applicant.
> >>
> >>
> >>
> >> Kind regards
> >>
> >> Andy Brown
> >>
> >>
> >>
> >> *From:* Simon Megchelse | NTA
> >> *Sent:* Tuesday, 18 May 2021 8:59 AM
> >> *To:* Andy Brown | NTA
> >> *Cc:* michael.sudfelt@gjgardner.co.nz
> >> *Subject:* FW: 8 Sampsons Way
> >>
> >>
> >>
> >> Good morning Andy
> >>
> >>
> >>
> >> As discussed yesterday please assess this request from Michael at G.J
> >> Gardener and advise KDC's/NTA's considerations as an affected party,
> >> typically RCA's can reasonably support reduced boundary set back of
> >> building from road front boundary subject to;
> >>
> >> ? Sight Lines for motorists not being compromised
> >>
> >> ? Will not impact any upgrade to roads formation
> >>
> >> ? Not a habitable room proposed to be set closer to the road
> >> boundary (i.e. garage okay)
> >>
> >>
> >>
> >> As the asset owner could you please reply back to Michael, this will
> >> allow G.J's to progress with any change to their Planning/Building
> consent

> >> application.
> >>
> >>
> >>
> >> Regards
> >>
> >>
> >>
> >> *Simon Megchelse*
> >>
> >> *Road Corridor Coordinator *
> >>
> >> *Whangarei District Council **| *Forum North | Private Bag 9023,
> >> Whangarei 0148 | www.wdc.govt.nz
> >>
> >> *P **09 430 4200* | *DDI **09 4703031* | *M** 0272703820* | *E:*
> >> *simon.megchelse@wdc.govt.nz*
> >>
> >> [image: NTA Horizontal long - full colour]
> >>
> >>
> >>
> >>
> >>
> >>
> >>
> >>
> >>
> >>
> >> *From:* Michael Sudfelt
> >> *Sent:* Monday, May 17, 2021 3:11 PM
> >> *To:* Simon Megchelse | NTA
> >> *Subject:* 8 Sampsons Way
> >>
> >>
> >>
> >> Hi Simon,
> >>
> >>
> >>
> >> As discussed this afternoon, we are having trouble complying with the
> >> Kaipara District plan. To achieve suitable on site turning for this
> modest
> >> 3 bedroom home we are finding that we are going over the allowable
> >> impervious surface restrictions.

> >>
> >>
> >>
> >> To stay within this requirement we are proposing that we bring the house
> >> forward to 4.0m off the road front boundary. Please see attached copy of
> >> proposed site plan.
> >>
> >>
> >>
> >> I've taken a screenshot from google maps which shows the 'way' which
> >> might be of some assistance.
> >>
> >>
> >>
> >> Please let me know if you have any questions. If you think this is
> >> something you would be happy to support, could you please let me know
> and I
> >> will get the form the KDC council will want completed to support our
> >> application.
> >>
> >>
> >>
> >> Thank heaps,
> >>
> >>
> >>
> >>
> >>
> >> *Regards*
> >> *Michael Sudfelt*
> >>
> >>
> >>
> >> Franchise Owner | Sudfelt Construction Ltd -
> >> Whangarei / Kaipara Franchisee for G.J. Gardner Homes
> >> Mob: 027 527 4527 | Ph: (09) 437 5666 |
> >> Web: www.gjgardner.co.nz
> >>
> >>
> >>
> >>
> >>
> >>
> >>

> >>
> >>
> >>
> >>
> >> This email, including attachments, may contain information which is
> >> confidential or subject to legal privilege or copyright. If you are not
> the
> >> intended recipient, please notify us immediately and then please delete
> all
> >> copies of this email from your system. You must not use, disseminate,
> >> distribute or reproduce this email, any attachments, or any part
> thereof if
> >> you are not the intended recipient.
> >>
> >> Email communications are not secure and are not guaranteed by us to be
> >> free of unauthorised interference, error or virus. Anyone who
> communicates
> >> with us by email is taken to accept this risk. To the maximum extent
> >> permitted by law we are not liable for any virus or other defect in this
> >> email or in any attachment (or for any unauthorized changes made to or
> >> other interference with this email or to any attachment).
> >>
> >> Please note that this communication does not designate an information
> >> system for the purposes of the Electronic Transactions Act 2002.
> >>
> >>
> >>
> >> The Northland Transportation Alliance is a partnership between all four
> >> councils within Northland and Waka Kotahi (NZTA). The information
> contained
> >> within this email may be confidential. Therefore, if you have received
> this
> >> in error, you should delete it immediately and advise the sender noting
> >> that information contained within this communication should not be used
> or
> >> transmitted in any format.
> >>
> >> The Northland Transportation Alliance is a partnership between all four
> >> councils within Northland and Waka Kotahi (NZTA). The information
> contained
> >> within this email may be confidential. Therefore, if you have received
> this
> >> in error, you should delete it immediately and advise the sender noting
> >> that information contained within this communication should not be used

> or
> >> transmitted in any format.
> >>
> >> The Northland Transportation Alliance is a partnership between all four
> >> councils within Northland and Waka Kotahi (NZTA). The information
> contained
> >> within this email may be confidential. Therefore, if you have received
> this
> >> in error, you should delete it immediately and advise the sender noting
> >> that information contained within this communication should not be used
> or
> >> transmitted in any format.
> >>
> >
>
>
> ----------
>
> REJECTED ATTACHMENT(S):
> Note: The listed file(s) below were rejected because they were not in PDF
> format.
> - image001.jpg
> - image002.jpg
> - image003.jpg
> - image004.jpg
> - image005.png
> - image006.png
> - image007.png
> - image008.jpg
> - image009.jpg
> - image010.jpg
>
> ----------
>
> ----------
> *DISCLAIMER*
> This message is for the designated recipient(s) only, and may contain
> confidential and/or privileged information. If you have received it in
> error, please delete it and advise the sender immediately. You should not
> copy or use it for any other purpose, nor disclose its contents to any
> other person.
>
> Designated Recipient(s): ean.dawson@gjgardner.co.nz, rachyledge@gmail.com
> Sent From: AlphaOne Building Consent System

> Sent Date: 15 June 2021 08:46:47 am - Tuesday

Email #165129: BC210208

Project ID: 210208
Date Sent: 2021-06-15 10:10:08
Recipient: ean.dawson@gjgardner.co.nz
Sender: AlphaOne System
Subject: RE: Re: BC210208: 8 Sampsons Way Dargaville
Message:

Hello

Thank you for your message regarding your application with Kaipara District Council. This is an automated response to confirm your message has been received by the assigned officer for review. You can expect a response within 5 working days.

We accept email attachments in PDF, JPG and PNG format.

ACCEPTED ATTACHMENTS:
- 390076 - EDGE - PIM-15-06-21.pdf (288.59kB)

For further information or enquiries please email 210208@kdc.abcs.co.nz.

Kind regards

Kaipara District Council
Unit 6 - The Hub
6 Molesworth Drive
Mangawhai 0505
www.kaipara.govt.nz

Email #165149: BC210208

Project ID: 210208
Date Sent: 2021-06-15 11:03:02
Recipient: ean.dawson@gjgardner.co.nz
Sender: Kelsey Newman
Subject: BC210208: 8 Sampsons Way Dargaville
Message:

Morena Ean,

Thank you for the phone call and providing updated plans to show the 8m radius turning circle. This satisfied the requirement for the compliance for Rule 13.10.25 and Rule 13.10.27.

The plan change process will hopefully allow these wee quirks in the plan to be ironed out and address the changing lot sizes. Please keep an eye on the website as there will be opportunities for the community to be consulted.

Kelsey Newman
Planning Team
Kaipara District Council
Unit 6 - The Hub, 6 Molesworth Drive, Mangawhai 0505
P: (09) 439 3123 | E: buildingsupport@kaipara.govt.nz | W: www.kaipara.govt.nz

==========

Tena koe Kelsey,

Thank you for receiving my call today. Please find attached the site plan and modifications to Gobi blocks to suit an 8.0m turning circle.

As discussed the district plan rules seem very unreasonable with the size of lots we are working with, so a change to this rule would benefit everyone going forward.

*Ng**? mihi nui,*
Ean Dawson

Contracts Manager | Sudfelt Construction Ltd -
Whangarei / Kaipara Franchisee for G.J. Gardner Homes
Ph: (09) 437 5666 | Web: www.gjgardner.co.nz

[image: http://www.gjgardner.co.nz/assets/Uploads/Facebook.jpg]
[image:
http://www.gjgardner.co.nz/assets/Uploads/Pinterest.jpg]
[image:
https://www.gjgardner.co.nz/assets/Uploads/Insta8.jpg]

[image: http://www.gjgardner.co.nz/assets/Uploads/GJGardner.jpg]

This email, including attachments, may contain information which is confidential or subject to legal privilege or copyright. If you are not the intended recipient, please notify us immediately and then please delete all copies of this email from your system. You must not use, disseminate, distribute or reproduce this email, any attachments, or any part thereof if you are not the intended recipient.

Email communications are not secure and are not guaranteed by us to be free of unauthorised interference, error or virus. Anyone who communicates with us by email is taken to accept this risk. To the maximum extent permitted by law we are not liable for any virus or other defect in this email or in any attachment (or for any unauthorized changes made to or other interference with this email or to any attachment).

Please note that this communication does not designate an information system for the purposes of the Electronic Transactions Act 2002.

On Tue, 15 Jun 2021 at 09:36, Kaipara District Council wrote:

>
> Morena,
>
> Thank you for your quick response.
>
> I view this turning circle as a breach. To confirm compliance with the KDC
> Appendix 25C, please provide a clear drawing showing the 8m radius and
> maneuvering tracking curves.
>
> Kelsey Newman
> Planning Team
> Kaipara District Council
> Unit 6 - The Hub, 6 Molesworth Drive, Mangawhai 0505
> P: (09) 439 3123 | E: buildingsupport@kaipara.govt.nz | W:
> www.kaipara.govt.nz

>
>
>
>
> ==>
> Morena Kelsey,
>
> I had indicated the turning circles of both vehicles on the drawings that
> work within the driveway and Gobi blocks, The vehicles tracking is as per
> AS/NZS 2890.1:2004 (Off Street Car Parking) - B99 Vehicle (Realistic min
> radius) (2004) without any allowances for lock to lock time (i.e. vehicles
> are turning lock to lock while stationary).
>
> So I believe that this should suffice planning requirements?
>
> *Ng**? mihi nui,*
> *Ean Dawson*
>
> Contracts Manager | Sudfelt Construction Ltd -
> Whangarei / Kaipara Franchisee for G.J. Gardner Homes
> Ph: (09) 437 5666 | Web: www.gjgardner.co.nz
>
> [image: http://www.gjgardner.co.nz/assets/Uploads/Facebook.jpg]
> [image:
> http://www.gjgardner.co.nz/assets/Uploads/Pinterest.jpg]
> [image:
> https://www.gjgardner.co.nz/assets/Uploads/Insta8.jpg]
>
>
> [image: http://www.gjgardner.co.nz/assets/Uploads/GJGardner.jpg]
>
>
> This email, including attachments, may contain information which is
> confidential or subject to legal privilege or copyright. If you are not the
> intended recipient, please notify us immediately and then please delete all
> copies of this email from your system. You must not use, disseminate,
> distribute or reproduce this email, any attachments, or any part thereof if
> you are not the intended recipient.
>
> Email communications are not secure and are not guaranteed by us to be free
> of unauthorised interference, error or virus. Anyone who communicates with
> us by email is taken to accept this risk. To the maximum extent permitted
> by law we are not liable for any virus or other defect in this email or in
> any attachment (or for any unauthorized changes made to or other

> interference with this email or to any attachment).
>
> Please note that this communication does not designate an information
> system for the purposes of the Electronic Transactions Act 2002.
>
> On Tue, 15 Jun 2021 at 08:46, Kaipara District Council
> wrote:
>
> > Morena,
> >
> > Thank you for the updated site plan. From looking at the plan the use of
> > impermeable 'Gobi Blocks' as a border of the driveway allows compliance
> > with the impermeable surface Rule within the District Plan. The only
> > remaining breaches are 13.10.25 and 13.10.27 due to the turning circle.
> >
> >
> > Kelsey Newman
> > Planning Team
> > Kaipara District Council
> > Unit 6 - The Hub, 6 Molesworth Drive, Mangawhai 0505
> > P: (09) 439 3123 | E: buildingsupport@kaipara.govt.nz | W:
> > www.kaipara.govt.nz
> >
> >
> >
> >
> > ==========> >
> > Tena koe,
> >
> > Please find following email I sent to the Planning department of KDC for
> > your information.
> >
> > *Ng**? mihi nui,*
> > *Ean Dawson*
> >
> > Contracts Manager | Sudfelt Construction Ltd -
> > Whangarei / Kaipara Franchisee for G.J. Gardner Homes
> > Ph: (09) 437 5666 | Web: www.gjgardner.co.nz
> >
> > [image: http://www.gjgardner.co.nz/assets/Uploads/Facebook.jpg]
> > [image:
> > http://www.gjgardner.co.nz/assets/Uploads/Pinterest.jpg]
> > [image:
> > https://www.gjgardner.co.nz/assets/Uploads/Insta8.jpg]

> >
> >
> > [image: http://www.gjgardner.co.nz/assets/Uploads/GJGardner.jpg]
> >
> >
> > This email, including attachments, may contain information which is
> > confidential or subject to legal privilege or copyright. If you are not
> the
> > intended recipient, please notify us immediately and then please delete
> all
> > copies of this email from your system. You must not use, disseminate,
> > distribute or reproduce this email, any attachments, or any part thereof
> if
> > you are not the intended recipient.
> >
> > Email communications are not secure and are not guaranteed by us to be
> free
> > of unauthorised interference, error or virus. Anyone who communicates
> with
> > us by email is taken to accept this risk. To the maximum extent permitted
> > by law we are not liable for any virus or other defect in this email or
> in
> > any attachment (or for any unauthorized changes made to or other
> > interference with this email or to any attachment).
> >
> > Please note that this communication does not designate an information
> > system for the purposes of the Electronic Transactions Act 2002.
> >
> > ---------- Forwarded message ---------
> > From: Ean Dawson
> > Date: Mon, 14 Jun 2021 at 11:01
> > Subject: Re: FW: 8 Sampsons Way
> > To: Kelsey Newman ,
> > Cc: Julieanne.Mollet@gjgardner.co.nz ,
> > Michael Sudfelt
> >
> > Kia ora Kelsey and Wendy,
> >
> > Please find attached site plan with turning circles and maneuverability
> for
> > the two x vehicles as well as the framed Gobi Block's around the
> driveway.
> >
> > Please advise if this satisfies the requirement for *not *applying for

> RC.
> >
> > *Ng**? mihi nui,*
> > *Ean Dawson*
> >
> > Contracts Manager | Sudfelt Construction Ltd -
> > Whangarei / Kaipara Franchisee for G.J. Gardner Homes
> > Ph: (09) 437 5666 | Web: www.gjgardner.co.nz
> >
> > [image: http://www.gjgardner.co.nz/assets/Uploads/Facebook.jpg]
> > [image:
> > http://www.gjgardner.co.nz/assets/Uploads/Pinterest.jpg]
> > [image:
> > https://www.gjgardner.co.nz/assets/Uploads/Insta8.jpg]
> >
> >
> > [image: http://www.gjgardner.co.nz/assets/Uploads/GJGardner.jpg]
> >
> >
> > This email, including attachments, may contain information which is
> > confidential or subject to legal privilege or copyright. If you are not
> the
> > intended recipient, please notify us immediately and then please delete
> all
> > copies of this email from your system. You must not use, disseminate,
> > distribute or reproduce this email, any attachments, or any part thereof
> if
> > you are not the intended recipient.
> >
> > Email communications are not secure and are not guaranteed by us to be
> free
> > of unauthorised interference, error or virus. Anyone who communicates
> with
> > us by email is taken to accept this risk. To the maximum extent permitted
> > by law we are not liable for any virus or other defect in this email or
> in
> > any attachment (or for any unauthorized changes made to or other
> > interference with this email or to any attachment).
> >
> > Please note that this communication does not designate an information
> > system for the purposes of the Electronic Transactions Act 2002.
> >
> > On Fri, 11 Jun 2021 at 14:09, Michael Sudfelt
> > wrote:

> >
> > > Thanks Kelsey,
> > >
> > > *Regards*
> > > *Michael Sudfelt*
> > >
> > >
> > >
> > > Franchise Owner | Sudfelt Construction Ltd -
> > > Whangarei / Kaipara Franchisee for G.J. Gardner Homes
> > > Mob: 027 527 4527 | Ph: (09) 437 5666 |
> > > Web: www.gjgardner.co.nz
> > >
> > > [image: http://www.gjgardner.co.nz/assets/Uploads/Facebook.jpg]
> > > [image:
> > > http://www.gjgardner.co.nz/assets/Uploads/Pinterest.jpg]
> > > [image:
> > > https://www.gjgardner.co.nz/assets/Uploads/Insta8.jpg]
> > >
> > >
> > >
> > >
> > > [image: http://www.gjgardner.co.nz/assets/Uploads/GJGardner.jpg]
> > >
> > >
> > >
> > >
> > > This email, including attachments, may contain information which is
> > > confidential or subject to legal privilege or copyright. If you are not
> > the
> > > intended recipient, please notify us immediately and then please delete
> > all
> > > copies of this email from your system. You must not use, disseminate,
> > > distribute or reproduce this email, any attachments, or any part
> thereof
> > if
> > > you are not the intended recipient.
> > >
> > > Email communications are not secure and are not guaranteed by us to be
> > > free of unauthorised interference, error or virus. Anyone who
> > communicates
> > > with us by email is taken to accept this risk. To the maximum extent
> > > permitted by law we are not liable for any virus or other defect in
> this

> > > email or in any attachment (or for any unauthorized changes made to or
> > > other interference with this email or to any attachment).
> > >
> > > Please note that this communication does not designate an information
> > > system for the purposes of the Electronic Transactions Act 2002.
> > >
> > >
> > > On Thu, Jun 10, 2021 at 10:51 AM Kelsey Newman
> > > wrote:
> > >
> > >> Hello there,
> > >>
> > >>
> > >>
> > >> Apologies regarding the miss information I provided, Wendy and I had a
> > >> chat to clarify this.
> > >>
> > >>
> > >>
> > >> The plan that you have proposed that shows a 0.5m front setback breach
> > >> has been looked at and the manoeuvring area is in compliance.
> > >>
> > >>
> > >>
> > >> In regards to the gobi blocks or the materials excluded from the
> > >> impermeable surface materials, showing these on the site plan would be
> > >> helpful. Council can allow permeable pavers to be used such as gobi
> > >> blocks. Within KDC District Plan Appendix 25A, which states in Section
> > 6.1:
> > >>
> > >>
> > >>
> > >> - *"Permeable surfaces such as gravel, gobi-blocks or other permeable
> > >> paving systems can be used on driveways, parking places and pathways
> > to
> > >> allow storm water to percolate directly into the underlying
> > sub-soil". *
> > >>
> > >>
> > >>
> > >> Regarding the Deemed Permitted Marginal Activity, I double checked
> > with
> > >> Wendy and unfortunately council does not process Deemed Permitted
> > > Marginal

> > >> Activities for Manoeuvring Beaches as it is an access issue.
> > >>
> > >>
> > >>
> > >> I hope this answers your questions and thank you for your patience.
> > >>
> > >>
> > >>
> > >> Ng? mihi nui,
> > >>
> > >>
> > >>
> > >> Kelsey
> > >>
> > >>
> > >>
> > >>
> > >>
> > >> [image: KDC Logo test June 2015]
> > >>
> > >> Kelsey Newman | Graduate Planner
> > >>
> > >> Kaipara District Council, Private Bag 1001, Dargaville 0340
> > >>
> > >> Freephone: 0800 727 059 | DDI: 09 439 3123 | Cell: 021 391 351
> > >>
> > >> knewman@kaipara.govt.nz | council@kaipara.govt.nz |
> www.kaipara.govt.nz
> > >>
> > >>
> > >> *Please be advised that any statements made by the Council's Resource
> > >> Consent Helpdesk team are for the purposes of providing general
> guidance
> > >> only, and are not to be relied upon as advice for the purposes of
> > assessing
> > >> particular proposals. Recipients are advised that they need to seek
> > their
> > >> own independent professional advice and make their own enquiries.
> > >> Furthermore, any general guidance given by the Council's Resource
> > Consent
> > >> Helpdesk team does not have any bearing on the position that the
> Council
> > >> may take in its regulatory capacity.*

> > >>
> > >>
> > >>
> > >> *The Council makes no warranty, express or implied, nor assumes any
> > legal
> > >> liability or responsibility for the accuracy, correctness,
> completeness
> > or
> > >> use of any information or views communicated as part of the Resource
> > >> Consent Helpdesk service. To the extent permissible by law, the
> Council
> > >> expressly disclaims any liability to the applicant (under any theory
> of
> > law
> > >> including negligence) in relation to any duty.*
> > >>
> > >>
> > >>
> > >>
> > >>
> > >>
> > >>
> > >>
> > >>
> > >> *From:* Wendy Robinson
> > >> *Sent:* Wednesday, 2 June 2021 2:23 pm
> > >> *To:* Kelsey Newman
> > >> *Subject:* FW: FW: 8 Sampsons Way
> > >>
> > >>
> > >>
> > >> Hi Kelsey,
> > >>
> > >>
> > >>
> > >> Any chance you could check this one again before he lodges?
> > >>
> > >>
> > >>
> > >> Ng? mihi,
> > >>
> > >> Wendy
> > >>
> > >>

> > >>
> > >> *From:* Michael Sudfelt
> > >> *Sent:* Wednesday, 2 June 2021 12:50 PM
> > >> *To:* Wendy Robinson
> > >> *Cc:* Ean Dawson ; Julieanne Mollet
> > >>
> > >> *Subject:* Fwd: FW: 8 Sampsons Way
> > >>
> > >>
> > >>
> > >> CAUTION: This email originated from outside Kaipara District Council.
> Do
> > >> not click links or open attachments unless you recognise the sender
> and
> > >> know the content is safe.
> > >>
> > >>
> > >>
> > >> Hi Wendy,
> > >>
> > >>
> > >>
> > >> Thanks for your chat just now.
> > >>
> > >>
> > >>
> > >> To offer further clarity I've attached the plans, PIM & form 4 which
> > this
> > >> all relates to.
> > >>
> > >>
> > >>
> > >> I also attach the plan we are proposing that shows a 0.5m front
> setback
> > >> breach which we believe enables for the onsite turning to work, while
> > >> remaining inside the impervious surfaces limits.
> > >>
> > >>
> > >>
> > >> Before we go down this track any further do you think you could have
> > >> someone check this to make sure we all agree the only breach with this
> > >> proposal is the front setback? I'd hate to carry on and then find
> > someone
> > >> doesn't agree with our on site turning working..

> > >>
> > >>
> > >>
> > >> Also with regards to 'gobi blocks' or something to that effect, are
> you
> > >> able to confirm that if we were to show these on the site plan as part
> > of
> > >> the driveway, will they count against our impervious surface area?
> > >>
> > >>
> > >>
> > >> And one last thought, given that the on site turning is soooo very
> close
> > >> to complying with the district plan, could we leave as is and apply
> for
> > >> "Deemed Permitted Marginal Activity"? From having a read through the
> > >> attached guidance I would consider that the breach is marginal, and
> that
> > >> any potential effects on any person would be 'less than minor'..
> > >>
> > >>
> > >>
> > >> Thanks heaps for your attention on this one.
> > >>
> > >>
> > >>
> > >> Kind regards,
> > >>
> > >>
> > >> *Regards*
> > >> *Michael Sudfelt*
> > >>
> > >>
> > >>
> > >> Franchise Owner | Sudfelt Construction Ltd -
> > >> Whangarei / Kaipara Franchisee for G.J. Gardner Homes
> > >> Mob: 027 527 4527 | Ph: (09) 437 5666 |
> > >> Web: www.gjgardner.co.nz
> > >>
> > >>
> > >>
> > >>
> > >>
> > >>

> > >>
> > >>
> > >>
> > >>
> > >>
> > >> This email, including attachments, may contain information which is
> > >> confidential or subject to legal privilege or copyright. If you are
> not
> > the
> > >> intended recipient, please notify us immediately and then please
> delete
> > all
> > >> copies of this email from your system. You must not use, disseminate,
> > >> distribute or reproduce this email, any attachments, or any part
> > thereof if
> > >> you are not the intended recipient.
> > >>
> > >> Email communications are not secure and are not guaranteed by us to be
> > >> free of unauthorised interference, error or virus. Anyone who
> > communicates
> > >> with us by email is taken to accept this risk. To the maximum extent
> > >> permitted by law we are not liable for any virus or other defect in
> this
> > >> email or in any attachment (or for any unauthorized changes made to or
> > >> other interference with this email or to any attachment).
> > >>
> > >> Please note that this communication does not designate an information
> > >> system for the purposes of the Electronic Transactions Act 2002.
> > >>
> > >>
> > >>
> > >> ---------- Forwarded message ---------
> > >> From: *Julieanne Mollet*
> > >> Date: Mon, May 31, 2021 at 4:27 PM
> > >> Subject: Fwd: FW: 8 Sampsons Way
> > >> To: Michael Sudfelt
> > >>
> > >>
> > >>
> > >>
> > >> *Regards*
> > >> *Julieanne Mollet*
> > >>
> > >>

> > >>
> > >> Administrator | Sudfelt Construction Ltd -
> > >> Whangarei / Kaipara Franchisee for G.J. Gardner Homes
> > >> Ph: (09) 437 5666 | Web: www.gjgardner.co.nz
> > >>
> > >>
> > >>
> > >>
> > >>
> > >>
> > >>
> > >>
> > >>
> > >>
> > >>
> > >>
> > >> This email, including attachments, may contain information which is
> > >> confidential or subject to legal privilege or copyright. If you are
> not
> > the
> > >> intended recipient, please notify us immediately and then please
> delete
> > all
> > >> copies of this email from your system. You must not use, disseminate,
> > >> distribute or reproduce this email, any attachments, or any part
> > thereof if
> > >> you are not the intended recipient.
> > >>
> > >> Email communications are not secure and are not guaranteed by us to be
> > >> free of unauthorised interference, error or virus. Anyone who
> > communicates
> > >> with us by email is taken to accept this risk. To the maximum extent
> > >> permitted by law we are not liable for any virus or other defect in
> this
> > >> email or in any attachment (or for any unauthorized changes made to or
> > >> other interference with this email or to any attachment).
> > >>
> > >> Please note that this communication does not designate an information
> > >> system for the purposes of the Electronic Transactions Act 2002
> > >>
> > >>
> > >>
> > >> ---------- Forwarded message ---------
> > >> From: *Andy Brown | NTA*
> > >> Date: Mon, 31 May 2021 at 15:12

> > >> Subject: FW: 8 Sampsons Way
> > >> To: Julieanne Mollet
> > >> Cc: Wendy Robinson
> > >>
> > >>
> > >>
> > >> Hi Julieanne,
> > >>
> > >>
> > >>
> > >> Apologies for not getting back to you but I was concerned we had the
> > >> wrong information on this. Below is confirmation that I was correct
> and
> > >> the Resource Consents manager is happy to Discuss as per below.
> > >>
> > >>
> > >>
> > >>
> > >>
> > >> Kind regards
> > >>
> > >> Andy
> > >>
> > >>
> > >>
> > >> *From:* Wendy Robinson
> > >> *Sent:* Monday, 31 May 2021 3:02 PM
> > >> *To:* Andy Brown | NTA
> > >> *Subject:* RE: 8 Sampsons Way
> > >>
> > >>
> > >>
> > >> Hi Andy,
> > >>
> > >>
> > >>
> > >> Definitely not sure what is happening on this one. Deemed Permitted
> > >> Boundary Activities only relate to side and rear setbacks, not front
> > >> setbacks. Feel free to have them call me directly.
> > >>
> > >>
> > >>
> > >> Ng? mihi,
> > >>

> > >> Wendy
> > >>
> > >>
> > >>
> > >> [image: KDC Logo test June 2015]
> > >>
> > >> Wendy Robinson | Resource Consents Manager
> > >>
> > >> Mangawhai Office: Unit 6, The Hub, 6 Molesworth Drive, Mangawhai 0505
> > >>
> > >> Kaipara District Council, Private Bag 1001, Dargaville 0340
> > >>
> > >> Freephone: 0800 727 059 | Phone: 021 579 937
> > >>
> > >> *wrobinson*@kaipara.govt.nz | council@kaipara.govt.nz |
> > >> www.kaipara.govt.nz
> > >>
> > >>
> > >>
> > >>
> > >>
> > >>
> > >>
> > >>
> > >> *From:* Andy Brown | NTA
> > >> *Sent:* Monday, 31 May 2021 12:43 PM
> > >> *To:* Wendy Robinson
> > >> *Subject:* FW: 8 Sampsons Way
> > >>
> > >>
> > >>
> > >> CAUTION: This email originated from outside Kaipara District Council.
> Do
> > >> not click links or open attachments unless you recognise the sender
> and
> > >> know the content is safe.
> > >>
> > >>
> > >>
> > >> FYI for discussion if needed
> > >>
> > >>
> > >>
> > >> *From:* Andy Brown | NTA
> > >> *Sent:* Wednesday, 26 May 2021 10:05 AM

> > >> *To:* Julieanne Mollet ; Simon
> > >> Megchelse | NTA ; Michael Sudfelt
> > > michael.sudfelt@gjgardner.co.nz>
> > >> *Subject:* RE: 8 Sampsons Way
> > >>
> > >>
> > >>
> > >> Hi Julieanne
> > >>
> > >>
> > >>
> > >> Could you please provide back a form that has no detail in the
> affected
> > >> parties section so I can complete in full? I am not in the office
> today
> > >> but can print, fill in & sign and return tomorrow when I am back in
> the
> > >> office.
> > >>
> > >>
> > >>
> > >>
> > >>
> > >> Regards
> > >>
> > >> Andy
> > >>
> > >>
> > >>
> > >>
> > >>
> > >> *From:* Julieanne Mollet
> > >> *Sent:* Wednesday, 26 May 2021 9:23 AM
> > >> *To:* Simon Megchelse | NTA ; Andy Brown |
> > >> NTA ; Michael Sudfelt
> > > michael.sudfelt@gjgardner.co.nz>
> > >> *Subject:* Fwd: 8 Sampsons Way
> > >>
> > >>
> > >>
> > >> Hi Andy and Simon
> > >>
> > >>
> > >>
> > >>

> > >> Just following up on the below email. We are keen to get this
> submitted
> > >> to Council as soon as possible for our client. Would you be able to
> let
> > us
> > >> know when we can expect this back? Or did you have any queries on the
> > >> details we had sent through?
> > >>
> > >>
> > >> *Regards*
> > >> *Julieanne Mollet*
> > >>
> > >>
> > >>
> > >> Administrator | Sudfelt Construction Ltd -
> > >> Whangarei / Kaipara Franchisee for G.J. Gardner Homes
> > >> Ph: (09) 437 5666 | Web: www.gjgardner.co.nz
> > >>
> > >> [image: Image removed by sender.]
> > >> [image: Image
> > >> removed by sender.] [image:
> > >> Image removed by sender.]
> > >>
> > >>
> > >>
> > >>
> > >> [image: Image removed by sender.]
> > >>
> > >>
> > >>
> > >> This email, including attachments, may contain information which is
> > >> confidential or subject to legal privilege or copyright. If you are
> not
> > the
> > >> intended recipient, please notify us immediately and then please
> delete
> > all
> > >> copies of this email from your system. You must not use, disseminate,
> > >> distribute or reproduce this email, any attachments, or any part
> > thereof if
> > >> you are not the intended recipient.
> > >>
> > >> Email communications are not secure and are not guaranteed by us to be
> > >> free of unauthorised interference, error or virus. Anyone who

> > communicates
> > >> with us by email is taken to accept this risk. To the maximum extent
> > >> permitted by law we are not liable for any virus or other defect in
> this
> > >> email or in any attachment (or for any unauthorized changes made to or
> > >> other interference with this email or to any attachment).
> > >>
> > >> Please note that this communication does not designate an information
> > >> system for the purposes of the Electronic Transactions Act 2002
> > >>
> > >>
> > >>
> > >> ---------- Forwarded message ---------
> > >> From: *Julieanne Mollet*
> > >> Date: Thu, 20 May 2021 at 09:17
> > >> Subject: Fwd: 8 Sampsons Way
> > >> To: ,
> > >> Cc: Michael Sudfelt
> > >>
> > >>
> > >>
> > >> Hi Andy and Simon
> > >>
> > >>
> > >>
> > >> Further to the below email correspondence with Michael, please see
> > >> attached the Affected Party Deemed Permitted Boundary Activity form
> and
> > >> plan for signoff. If you can please sign and return both for us, that
> > >> would be great.
> > >>
> > >>
> > >> *Regards*
> > >> *Julieanne Mollet*
> > >>
> > >>
> > >>
> > >> Administrator | Sudfelt Construction Ltd -
> > >> Whangarei / Kaipara Franchisee for G.J. Gardner Homes
> > >> Ph: (09) 437 5666 | Web: www.gjgardner.co.nz
> > >>
> > >> [image: Image removed by sender.]
> > >> [image: Image
> > >> removed by sender.] [image:

> > >> Image removed by sender.]
> > >>
> > >>
> > >>
> > >>
> > >> [image: Image removed by sender.]
> > >>
> > >>
> > >>
> > >> This email, including attachments, may contain information which is
> > >> confidential or subject to legal privilege or copyright. If you are
> not
> > the
> > >> intended recipient, please notify us immediately and then please
> delete
> > all
> > >> copies of this email from your system. You must not use, disseminate,
> > >> distribute or reproduce this email, any attachments, or any part
> > thereof if
> > >> you are not the intended recipient.
> > >>
> > >> Email communications are not secure and are not guaranteed by us to be
> > >> free of unauthorised interference, error or virus. Anyone who
> > communicates
> > >> with us by email is taken to accept this risk. To the maximum extent
> > >> permitted by law we are not liable for any virus or other defect in
> this
> > >> email or in any attachment (or for any unauthorized changes made to or
> > >> other interference with this email or to any attachment).
> > >>
> > >> Please note that this communication does not designate an information
> > >> system for the purposes of the Electronic Transactions Act 2002
> > >>
> > >>
> > >>
> > >> ---------- Forwarded message ---------
> > >>
> > >> From: *Michael Sudfelt*
> > >> Date: Tue, May 18, 2021 at 9:10 AM
> > >> Subject: Re: 8 Sampsons Way
> > >> To: Andy Brown | NTA
> > >> Cc: Simon Megchelse | NTA
> > >>
> > >>

> > >>
> > >> Thanks heaps Andy,
> > >>
> > >>
> > >>
> > >> The KDC planner had asked us to complete a 'deemed permitted boundary
> > >> activity' form and have that signed off by roading, and then they
> would
> > >> consider that before approving. If you're happy I'll get that
> completed
> > and
> > >> through for your sign off as the 'affected party', and then back to
> the
> > >> planners for sign off?
> > >>
> > >>
> > >>
> > >> Thank you!
> > >>
> > >>
> > >> *Regards*
> > >> *Michael Sudfelt*
> > >>
> > >>
> > >>
> > >> Franchise Owner | Sudfelt Construction Ltd -
> > >> Whangarei / Kaipara Franchisee for G.J. Gardner Homes
> > >> Mob: 027 527 4527 | Ph: (09) 437 5666 |
> > >> Web: www.gjgardner.co.nz
> > >>
> > >> [image: Image removed by sender.]
> > >> [image: Image
> > >> removed by sender.] [image:
> > >> Image removed by sender.]
> > >>
> > >>
> > >>
> > >>
> > >> [image: Image removed by sender.]
> > >>
> > >>
> > >>
> > >> This email, including attachments, may contain information which is
> > >> confidential or subject to legal privilege or copyright. If you are

> not
> > the
> > >> intended recipient, please notify us immediately and then please
> delete
> > all
> > >> copies of this email from your system. You must not use, disseminate,
> > >> distribute or reproduce this email, any attachments, or any part
> > thereof if
> > >> you are not the intended recipient.
> > >>
> > >> Email communications are not secure and are not guaranteed by us to be
> > >> free of unauthorised interference, error or virus. Anyone who
> > communicates
> > >> with us by email is taken to accept this risk. To the maximum extent
> > >> permitted by law we are not liable for any virus or other defect in
> this
> > >> email or in any attachment (or for any unauthorized changes made to or
> > >> other interference with this email or to any attachment).
> > >>
> > >> Please note that this communication does not designate an information
> > >> system for the purposes of the Electronic Transactions Act 2002.
> > >>
> > >>
> > >>
> > >>
> > >>
> > >> On Tue, May 18, 2021 at 9:04 AM Andy Brown | NTA
> > >> wrote:
> > >>
> > >> Good morning Simon and Michael,
> > >>
> > >>
> > >>
> > >> I have no objection to the proposal as pointed out in the bullet
> points
> > >> from Simon below it does not interfere with future use ect and would
> not
> > >> look significantly out of place.
> > >>
> > >>
> > >>
> > >> Please note however this response does not sever as approval for your
> > >> resource consent application as the proposed changes are not in line
> > with

> > >> the district plan requirements so this becomes a matter for the KDC
> > >> resource consents team to work through with the applicant.
> > >>
> > >>
> > >>
> > >> Kind regards
> > >>
> > >> Andy Brown
> > >>
> > >>
> > >>
> > >> *From:* Simon Megchelse | NTA
> > >> *Sent:* Tuesday, 18 May 2021 8:59 AM
> > >> *To:* Andy Brown | NTA
> > >> *Cc:* michael.sudfelt@gjgardner.co.nz
> > >> *Subject:* FW: 8 Sampsons Way
> > >>
> > >>
> > >>
> > >> Good morning Andy
> > >>
> > >>
> > >>
> > >> As discussed yesterday please assess this request from Michael at G.J
> > >> Gardener and advise KDC's/NTA's considerations as an affected party,
> > >> typically RCA's can reasonably support reduced boundary set back of
> > >> building from road front boundary subject to;
> > >>
> > >> ? Sight Lines for motorists not being compromised
> > >>
> > >> ? Will not impact any upgrade to roads formation
> > >>
> > >> ? Not a habitable room proposed to be set closer to the road
> > >> boundary (i.e. garage okay)
> > >>
> > >>
> > >>
> > >> As the asset owner could you please reply back to Michael, this will
> > >> allow G.J's to progress with any change to their Planning/Building
> > consent
> > >> application.
> > >>
> > >>
> > >>
> > >>

> > >> Regards
> > >>
> > >>
> > >>
> > >> *Simon Megchelse*
> > >>
> > >> *Road Corridor Coordinator *
> > >>
> > >> *Whangarei District Council **| *Forum North | Private Bag 9023,
> > >> Whangarei 0148 | www.wdc.govt.nz
> > >>
> > >> *P **09 430 4200* | *DDI **09 4703031* | *M** 0272703820* | *E:*
> > >> *simon.megchelse@wdc.govt.nz*
> > >>
> > >> [image: NTA Horizontal long - full colour]
> > >>
> > >>
> > >>
> > >>
> > >>
> > >>
> > >>
> > >>
> > >>
> > >> *From:* Michael Sudfelt
> > >> *Sent:* Monday, May 17, 2021 3:11 PM
> > >> *To:* Simon Megchelse | NTA
> > >> *Subject:* 8 Sampsons Way
> > >>
> > >>
> > >>
> > >> Hi Simon,
> > >>
> > >>
> > >>
> > >> As discussed this afternoon, we are having trouble complying with the
> > >> Kaipara District plan. To achieve suitable on site turning for this
> > modest
> > >> 3 bedroom home we are finding that we are going over the allowable
> > >> impervious surface restrictions.
> > >>
> > >>
> > >>
> > >> To stay within this requirement we are proposing that we bring the

> house
> > >> forward to 4.0m off the road front boundary. Please see attached copy
> of
> > >> proposed site plan.
> > >>
> > >>
> > >>
> > >> I've taken a screenshot from google maps which shows the 'way' which
> > >> might be of some assistance.
> > >>
> > >>
> > >>
> > >> Please let me know if you have any questions. If you think this is
> > >> something you would be happy to support, could you please let me know
> > and I
> > >> will get the form the KDC council will want completed to support our
> > >> application.
> > >>
> > >>
> > >>
> > >> Thank heaps,
> > >>
> > >>
> > >>
> > >>
> > >>
> > >> *Regards*
> > >> *Michael Sudfelt*
> > >>
> > >>
> > >>
> > >> Franchise Owner | Sudfelt Construction Ltd -
> > >> Whangarei / Kaipara Franchisee for G.J. Gardner Homes
> > >> Mob: 027 527 4527 | Ph: (09) 437 5666 |
> > >> Web: www.gjgardner.co.nz
> > >>
> > >>
> > >>
> > >>
> > >>
> > >>
> > >>
> > >>
> > >>

> > >>
> > >>
> > >> This email, including attachments, may contain information which is
> > >> confidential or subject to legal privilege or copyright. If you are
> not
> > the
> > >> intended recipient, please notify us immediately and then please
> delete
> > all
> > >> copies of this email from your system. You must not use, disseminate,
> > >> distribute or reproduce this email, any attachments, or any part
> > thereof if
> > >> you are not the intended recipient.
> > >>
> > >> Email communications are not secure and are not guaranteed by us to be
> > >> free of unauthorised interference, error or virus. Anyone who
> > communicates
> > >> with us by email is taken to accept this risk. To the maximum extent
> > >> permitted by law we are not liable for any virus or other defect in
> this
> > >> email or in any attachment (or for any unauthorized changes made to or
> > >> other interference with this email or to any attachment).
> > >>
> > >> Please note that this communication does not designate an information
> > >> system for the purposes of the Electronic Transactions Act 2002.
> > >>
> > >>
> > >>
> > >> The Northland Transportation Alliance is a partnership between all
> four
> > >> councils within Northland and Waka Kotahi (NZTA). The information
> > contained
> > >> within this email may be confidential. Therefore, if you have received
> > this
> > >> in error, you should delete it immediately and advise the sender
> noting
> > >> that information contained within this communication should not be
> used
> > or
> > >> transmitted in any format.
> > >>
> > >> The Northland Transportation Alliance is a partnership between all
> four
> > >> councils within Northland and Waka Kotahi (NZTA). The information

> > contained
> > >> within this email may be confidential. Therefore, if you have received
> > this
> > >> in error, you should delete it immediately and advise the sender
> noting
> > >> that information contained within this communication should not be
> used
> > or
> > >> transmitted in any format.
> > >>
> > >> The Northland Transportation Alliance is a partnership between all
> four
> > >> councils within Northland and Waka Kotahi (NZTA). The information
> > contained
> > >> within this email may be confidential. Therefore, if you have received
> > this
> > >> in error, you should delete it immediately and advise the sender
> noting
> > >> that information contained within this communication should not be
> used
> > or
> > >> transmitted in any format.
> > >>
> > >
> > >
> > >
> > ----------
> >
> > REJECTED ATTACHMENT(S):
> > Note: The listed file(s) below were rejected because they were not in PDF
> > format.
> > - image001.jpg
> > - image002.jpg
> > - image003.jpg
> > - image004.jpg
> > - image005.png
> > - image006.png
> > - image007.png
> > - image008.jpg
> > - image009.jpg
> > - image010.jpg
> >
> > ----------
> >

> > ------------------------------
> > *DISCLAIMER*
> > This message is for the designated recipient(s) only, and may contain
> > confidential and/or privileged information. If you have received it in
> > error, please delete it and advise the sender immediately. You should not
> > copy or use it for any other purpose, nor disclose its contents to any
> > other person.
> >
> > Designated Recipient(s): ean.dawson@gjgardner.co.nz,
> rachyledge@gmail.com
> > Sent From: AlphaOne Building Consent System
> > Sent Date: 15 June 2021 08:46:47 am - Tuesday
>
> ------------------------------
>
> ------------------------------
> *DISCLAIMER*
> This message is for the designated recipient(s) only, and may contain
> confidential and/or privileged information. If you have received it in
> error, please delete it and advise the sender immediately. You should not
> copy or use it for any other purpose, nor disclose its contents to any
> other person.
>
> Designated Recipient(s): ean.dawson@gjgardner.co.nz
> Sent From: AlphaOne Building Consent System
> Sent Date: 15 June 2021 09:36:22 am - Tuesday

Email #165204: BC210208

Project ID: 210208
Date Sent: 2021-06-15 14:04:15
Recipient: cathytengineer@gmail.com
Sender: Greg Bellam
Subject: BC210208: A new email has been allocated to you
Message:

Hello Cathy,

A new email for BC210208 has been allocated to you. Please check and take appropriate action.

https://kdc.abcs.co.nz/jobs/210208/communication/?optilbox

— AlphaOne System

Email #165205: BC210208

Project ID: 210208
Date Sent: 2021-06-15 14:04:16
Recipient: sharon.campbell@complynz.co.nz
Sender: Greg Bellam
Subject: BC210208: A new email has been allocated to you
Message:

Hello Sharon Campbell,

A new email for BC210208 has been allocated to you. Please check and take appropriate action.

https://kdc.abcs.co.nz/jobs/210208/communication/?optilbox

— AlphaOne System

Email #165523: BC210208

Project ID: 210208
Date Sent: 2021-06-17 09:00:10
Recipient: sharon.campbell@complynz.co.nz
Sender: Cathy
Subject: BC210208: 8 Sampsons Way Dargaville
Message:

Hello Sharon, I have elaborated on what information we require. Could you send another RFI letter. My concern is that the decision on this consent will set a precedent with further consents for similar houses on this subdivision.

Cathy
Specialist Input CPEng
Kaipara District Council
Unit 6 - The Hub, 6 Molesworth Drive, Mangawhai 0505
P: (09) 439 3123 | E: buildingsupport@kaipara.govt.nz | W: www.kaipara.govt.nz

Email #165527: BC210208

Project ID: 210208
Date Sent: 2021-06-17 09:19:51
Recipient: steve@RSEng.co.nz
Sender: Sharon Campbell
Subject:
BC210208.6 Request For Further Information - 8 Sampsons Way Dargaville
Message:
Dear Sir/Madam,

Reference Number: BC210208
Project Location: 8 Sampsons Way, Dargaville
Project Description: Construct 3 Bedroom Dwelling with Attached Garage

Processing of your building consent application in accordance with s48 of the Building Act is currently in progress. The attached letter details information which is required to be provided to demonstrate that the proposed work will comply with s 48 of the NZ Building Act and Regulations. Please note that the processing time clock has been suspended pending this information.

So that your information gets to us as promptly as possible, please:
- ensure you reply directly to this email and the format of our email address must be in full as follows: 210208@kdc.abcs.co.nz
- provide only the information that specifically relates to this project;
- ensure that all attachments are saved in PDF format;

Following the above will keep your project moving and ensure the information is delivered directly to the processor. To speed up processing we would request that changes to plans are marked using the "cloud" convention - thank you for helping us to help you!

Regards,

Sharon Campbell
Contractor 022 697 5120
Kaipara District Council
Unit 6 - The Hub, 6 Molesworth Drive, Mangawhai 0505
P: (09) 439 3123 | E: buildingsupport@kaipara.govt.nz | W: www.kaipara.govt.nz

Email #165577: BC210208

Project ID: 210208
Date Sent: 2021-06-17 12:47:56
Recipient: cathytengineer@gmail.com
Sender: Shalisha Blom
Subject: BC210208: A new email has been allocated to you
Message:

Hello Cathy,

A new email for BC210208 has been allocated to you. Please check and take appropriate action.

https://kdc.abcs.co.nz/jobs/210208/communication/?optilbox

— AlphaOne System

Email #165803: BC210208

Project ID: 210208
Date Sent: 2021-06-20 22:10:42
Recipient: ean.dawson@gjgardier.co.nz
Sender: Cathy
Subject: BC210208: 8 Sampsons Way Dargaville
Message:

I contacted Hawthorne Geddes on Friday. The geotechnical report was prepared for the subdivision resource consent rather than specifically for this site. They cannot provide advice on a specific building consent without being engaged to do so. After the discussion with Hawthorne Geddes, the best way forward is to obtain advice on the issue from a Chartered Geotechnical engineer as they are competent to do so. We will also include a building platform construction review and PS4 from a Chartered Geotechnical engineer as a condition of the consent.

Regards

Cathy
Specialist Input CPEng
Kaipara District Council
Unit 6 - The Hub, 6 Molesworth Drive, Mangawhai 0505
P: (09) 439 3123 | E: buildingsupport@kaipara.govt.nz | W: www.kaipara.govt.nz

From: Ean Dawson
Sent: Thursday, 17 June 2021 10:37 AM
To: Catherine Thomas
Cc: Michael Sudfelt ; Julieanne Mollet ; Building Support
Subject: Re: 390076 Edge - BC210208 -- Lot 8, Sampsons Way Dargaville 0310

CAUTION: This email originated from outside Kaipara District Council. Do not click links or open attachments unless you recognise the sender and know the content is safe.

Kia ora Catherine,

After our discussions you had made it clear that you were going to talk to RSeng and/or Hawthorn Geddes on this matter, and as previously stated if there is an issue on just this property there are another 5 houses that has been constructed with no concerns made at BC processing stage. I don't think a 3 week response period is a valid solution to get the best result for the client.

Does KDC engage a peer reviewer who is suitably qualified in the field of Civil/Geotech engineering who can say that this design is appropriate?

Ng? mihi nui,
Ean Dawson

Contracts Manager | Sudfelt Construction Ltd - Whangarei / Kaipara Franchisee for G.J. Gardner Homes
Ph: (09) 437 5666 | Web: www.gjgardner.co.nz
[http://www.gjgardner.co.nz/assets/Uploads/Facebook.jpg] [http://www.gjgardner.co.nz/assets/Uploads/Pinterest.jpg] [https://www.gjgardner.co.nz/assets/Uploads/Insta8.jpg]

[http://www.gjgardner.co.nz/assets/Uploads/GJGardner.jpg]

This email, including attachments, may contain information which is confidential or subject to legal privilege or copyright. If you are not the intended recipient, please notify us immediately and then please delete all copies of this email from your system. You must not use, disseminate, distribute or reproduce this email, any attachments, or any part thereof if you are not the intended recipient.

Email communications are not secure and are not guaranteed by us to be free of unauthorised interference, error or virus. Anyone who communicates with us by email is taken to accept this risk. To the maximum extent permitted by law we are not liable for any virus or other defect in this email or in any attachment (or for any unauthorized changes made to or other interference with this email or to any attachment).

Please note that this communication does not designate an information system for the purposes of the Electronic Transactions Act 2002.

On Thu, 17 Jun 2021 at 09:04, Catherine Thomas wrote:
Hello Ean, I have elaborated on my concerns regarding the high water table and another RFI letter will be sent. RSEng either need to provide more detailed information demonstrating that the drainage system they propose is adequate or consider a piled waffle raft system to prevent potential future settlement. There could be additional consents for other similar houses on this subdivision so it is important that any risk is mitigated.

Regards
Cathy

On Tue, Jun 15, 2021 at 12:13 PM Ean Dawson wrote:
Tena koe Cathy,

Thank you receiving my call earlier today.

As discussed could you please follow up with RSEng/Cook Costello regarding how the subsoil reduces pressure/settlement on the raft slab.

As I mentioned that the two engineers are competing for the same work so I would imagine that CC would oblige giving you your required information to satisfy the RFI.

If we could move on this as soon as possible it would be much appreciated.

Ng? mihi nui,
Ean Dawson

Contracts Manager | Sudfelt Construction Ltd - Whangarei / Kaipara Franchisee for G.J. Gardner Homes
Ph: (09) 437 5666 | Web: www.gjgardner.co.nz
[http://www.gjgardner.co.nz/assets/Uploads/Facebook.jpg] [http://www.gjgardner.co.nz/assets/Uploads/Pinterest.jpg] [https://www.gjgardner.co.nz/assets/Uploads/Insta8.jpg]

[http://www.gjgardner.co.nz/assets/Uploads/GJGardner.jpg]

This email, including attachments, may contain information which is confidential or subject to legal privilege or copyright. If you are not the intended recipient, please notify us immediately and then please delete all copies of this email from your system. You must not use, disseminate, distribute or reproduce this email, any attachments, or any part thereof if you are not the intended recipient.

Email communications are not secure and are not guaranteed by us to be free of unauthorised interference, error or virus. Anyone who communicates with us by email is taken to accept this risk. To the maximum extent permitted by law we are not liable for any virus or other defect in this email or in any attachment (or for any unauthorized changes made to or other interference with this email or to any attachment).

Please note that this communication does not designate an information system for the purposes of the Electronic Transactions Act 2002.

---------- Forwarded message ---------
From: Julieanne Mollet
Date: Tue, 15 Jun 2021 at 11:49
Subject: Fwd: 390076 Edge - BC210208 -- Lot 8, Sampsons Way Dargaville 0310
To: Ean Dawson

Regards
Julieanne Mollet

Administrator | Sudfelt Construction Ltd - Whangarei / Kaipara Franchisee for G.J. Gardner Homes
Ph: (09) 437 5666 | Web: www.gjgardner.co.nz
[http://www.gjgardner.co.nz/assets/Uploads/Facebook.jpg] [http://www.gjgardner.co.nz/assets/Uploads/Pinterest.jpg] [https://www.gjgardner.co.nz/assets/Uploads/Insta8.jpg]

[http://www.gjgardner.co.nz/assets/Uploads/GJGardner.jpg]

This email, including attachments, may contain information which is confidential or subject to legal privilege or copyright. If you are not the intended recipient, please notify us immediately and then please delete all copies of this email from your system. You must not use, disseminate, distribute or reproduce this email, any attachments, or any

part thereof if you are not the intended recipient.

Email communications are not secure and are not guaranteed by us to be free of unauthorised interference, error or virus. Anyone who communicates with us by email is taken to accept this risk. To the maximum extent permitted by law we are not liable for any virus or other defect in this email or in any attachment (or for any unauthorized changes made to or other interference with this email or to any attachment).

Please note that this communication does not designate an information system for the purposes of the Electronic Transactions Act 2002

---------- Forwarded message ---------
From: Julieanne Mollet
Date: Fri, 11 Jun 2021 at 15:47
Subject: 390076 Edge - BC210208 -- Lot 8, Sampsons Way Dargaville 0310
To: ,

Hi Cathy/Sharon

Can I please get an update on the RFI response for BC 210208 as per the below response we provided on 28 May.

RFI 1: Structural engineer review: The Hawthorn Geddes geotechnical report states that a waffle foundation slab is not suitable for this site due to ground water encountered at less than 0.6m below ground surface. Please confirm your drainage proposal with the Hawthorn Geddes geotechnical engineer. Provide confirmation that the drainage system proposed would be effective in mitigating the issue with high water table.

RFI 2: A response was received 3 May, which was confirmation of RS Eng design. Comment from Hawthorn Geddes geotechnical engineer is required to confirm that this design is sufficient.

RFI 4: We are still waiting a response to this RFI item.

Response provided:

The following is what RS Eng responded with:
Noted that the subdivision report outlines that a waffle foundation slab was not suitable due to elevated groundwater. RS Eng has addressed this issue by installing a drain on top of the hard pan, around the hardfill to remove groundwater from the building area, refer page 3 of calculations. This has been installed on a number of other properties in the area and along with keeping the dwelling elevated has worked effectively. It is not appropriate for Hawthorn Geddes to comment on RS Eng design approach for the dwelling.

28 May 2021 9:52 am

Thanks

Regards

Julieanne Mollet

Administrator | Sudfelt Construction Ltd - Whangarei / Kaipara Franchisee for G.J. Gardner Homes
Ph: (09) 437 5666 | Web: www.gjgardner.co.nz
[http://www.gjgardner.co.nz/assets/Uploads/Facebook.jpg] [http://www.gjgardner.co.nz/assets/Uploads/Pinterest.jpg] [https://www.gjgardner.co.nz/assets/Uploads/Insta8.jpg]

[http://www.gjgardner.co.nz/assets/Uploads/GJGardner.jpg]

This email, including attachments, may contain information which is confidential or subject to legal privilege or copyright. If you are not the intended recipient, please notify us immediately and then please delete all copies of this email from your system. You must not use, disseminate, distribute or reproduce this email, any attachments, or any part thereof if you are not the intended recipient.

Email communications are not secure and are not guaranteed by us to be free of unauthorised interference, error or virus. Anyone who communicates with us by email is taken to accept this risk. To the maximum extent permitted by law we are not liable for any virus or other defect in this email or in any attachment (or for any unauthorized changes made to or other interference with this email or to any attachment).

Please note that this communication does not designate an information system for the purposes of the Electronic Transactions Act 2002

Email #165804: BC210208

Project ID: 210208
Date Sent: 2021-06-20 22:10:45
Recipient: ean.dawson@gjgardier.co.nz
Sender: Cathy
Subject: BC210208: 8 Sampsons Way Dargaville
Message:

I contacted Hawthorne Geddes on Friday. The geotechnical report was prepared for the subdivision resource consent rather than specifically for this site. They cannot provide advice on a specific building consent without being engaged to do so. After the discussion with Hawthorne Geddes, the best way forward is to obtain advice on the issue from a Chartered Geotechnical engineer as they are competent to do so. We will also include a building platform construction review and PS4 from a Chartered Geotechnical engineer as a condition of the consent.

Regards

Cathy
Specialist Input CPEng
Kaipara District Council
Unit 6 - The Hub, 6 Molesworth Drive, Mangawhai 0505
P: (09) 439 3123 | E: buildingsupport@kaipara.govt.nz | W: www.kaipara.govt.nz

From: Ean Dawson
Sent: Thursday, 17 June 2021 10:37 AM
To: Catherine Thomas
Cc: Michael Sudfelt ; Julieanne Mollet ; Building Support
Subject: Re: 390076 Edge - BC210208 -- Lot 8, Sampsons Way Dargaville 0310

CAUTION: This email originated from outside Kaipara District Council. Do not click links or open attachments unless you recognise the sender and know the content is safe.

Kia ora Catherine,

After our discussions you had made it clear that you were going to talk to RSeng and/or Hawthorn Geddes on this matter, and as previously stated if there is an issue on just this property there are another 5 houses that has been constructed with no concerns made at BC processing stage. I don't think a 3 week response period is a valid solution to get the best result for the client.

Does KDC engage a peer reviewer who is suitably qualified in the field of Civil/Geotech engineering who can say that this design is appropriate?

Ng? mihi nui,
Ean Dawson

Contracts Manager | Sudfelt Construction Ltd - Whangarei / Kaipara Franchisee for G.J. Gardner Homes
Ph: (09) 437 5666 | Web: www.gjgardner.co.nz
[http://www.gjgardner.co.nz/assets/Uploads/Facebook.jpg] [http://www.gjgardner.co.nz/assets/Uploads/Pinterest.jpg] [https://www.gjgardner.co.nz/assets/Uploads/Insta8.jpg]

[http://www.gjgardner.co.nz/assets/Uploads/GJGardner.jpg]

This email, including attachments, may contain information which is confidential or subject to legal privilege or copyright. If you are not the intended recipient, please notify us immediately and then please delete all copies of this email from your system. You must not use, disseminate, distribute or reproduce this email, any attachments, or any part thereof if you are not the intended recipient.

Email communications are not secure and are not guaranteed by us to be free of unauthorised interference, error or virus. Anyone who communicates with us by email is taken to accept this risk. To the maximum extent permitted by law we are not liable for any virus or other defect in this email or in any attachment (or for any unauthorized changes made to or other interference with this email or to any attachment).

Please note that this communication does not designate an information system for the purposes of the Electronic Transactions Act 2002.

On Thu, 17 Jun 2021 at 09:04, Catherine Thomas wrote:
Hello Ean, I have elaborated on my concerns regarding the high water table and another RFI letter will be sent. RSEng either need to provide more detailed information demonstrating that the drainage system they propose is adequate or consider a piled waffle raft system to prevent potential future settlement. There could be additional consents for other similar houses on this subdivision so it is important that any risk is mitigated.

Regards
Cathy

On Tue, Jun 15, 2021 at 12:13 PM Ean Dawson wrote:
Tena koe Cathy,

Thank you receiving my call earlier today.

As discussed could you please follow up with RSEng/Cook Costello regarding how the subsoil reduces pressure/settlement on the raft slab.

As I mentioned that the two engineers are competing for the same work so I would imagine that CC would oblige giving you your required information to satisfy the RFI.

If we could move on this as soon as possible it would be much appreciated.

Ng? mihi nui,
Ean Dawson

Contracts Manager | Sudfelt Construction Ltd - Whangarei / Kaipara Franchisee for G.J. Gardner Homes
Ph: (09) 437 5666 | Web: www.gjgardner.co.nz
[http://www.gjgardner.co.nz/assets/Uploads/Facebook.jpg] [http://www.gjgardner.co.nz/assets/Uploads/Pinterest.jpg] [https://www.gjgardner.co.nz/assets/Uploads/Insta8.jpg]

[http://www.gjgardner.co.nz/assets/Uploads/GJGardner.jpg]

This email, including attachments, may contain information which is confidential or subject to legal privilege or copyright. If you are not the intended recipient, please notify us immediately and then please delete all copies of this email from your system. You must not use, disseminate, distribute or reproduce this email, any attachments, or any part thereof if you are not the intended recipient.

Email communications are not secure and are not guaranteed by us to be free of unauthorised interference, error or virus. Anyone who communicates with us by email is taken to accept this risk. To the maximum extent permitted by law we are not liable for any virus or other defect in this email or in any attachment (or for any unauthorized changes made to or other interference with this email or to any attachment).

Please note that this communication does not designate an information system for the purposes of the Electronic Transactions Act 2002.

---------- Forwarded message ---------
From: Julieanne Mollet
Date: Tue, 15 Jun 2021 at 11:49
Subject: Fwd: 390076 Edge - BC210208 -- Lot 8, Sampsons Way Dargaville 0310
To: Ean Dawson

Regards
Julieanne Mollet

Administrator | Sudfelt Construction Ltd - Whangarei / Kaipara Franchisee for G.J. Gardner Homes
Ph: (09) 437 5666 | Web: www.gjgardner.co.nz
[http://www.gjgardner.co.nz/assets/Uploads/Facebook.jpg] [http://www.gjgardner.co.nz/assets/Uploads/Pinterest.jpg] [https://www.gjgardner.co.nz/assets/Uploads/Insta8.jpg]

[http://www.gjgardner.co.nz/assets/Uploads/GJGardner.jpg]

This email, including attachments, may contain information which is confidential or subject to legal privilege or copyright. If you are not the intended recipient, please notify us immediately and then please delete all copies of this email from your system. You must not use, disseminate, distribute or reproduce this email, any attachments, or any

part thereof if you are not the intended recipient.

Email communications are not secure and are not guaranteed by us to be free of unauthorised interference, error or virus. Anyone who communicates with us by email is taken to accept this risk. To the maximum extent permitted by law we are not liable for any virus or other defect in this email or in any attachment (or for any unauthorized changes made to or other interference with this email or to any attachment).

Please note that this communication does not designate an information system for the purposes of the Electronic Transactions Act 2002

---------- Forwarded message ---------
From: Julieanne Mollet
Date: Fri, 11 Jun 2021 at 15:47
Subject: 390076 Edge - BC210208 -- Lot 8, Sampsons Way Dargaville 0310
To: ,

Hi Cathy/Sharon

Can I please get an update on the RFI response for BC 210208 as per the below response we provided on 28 May.

RFI 1: Structural engineer review: The Hawthorn Geddes geotechnical report states that a waffle foundation slab is not suitable for this site due to ground water encountered at less than 0.6m below ground surface. Please confirm your drainage proposal with the Hawthorn Geddes geotechnical engineer. Provide confirmation that the drainage system proposed would be effective in mitigating the issue with high water table.

RFI 2: A response was received 3 May, which was confirmation of RS Eng design. Comment from Hawthorn Geddes geotechnical engineer is required to confirm that this design is sufficient.

RFI 4: We are still waiting a response to this RFI item.

Response provided:

The following is what RS Eng responded with:
Noted that the subdivision report outlines that a waffle foundation slab was not suitable due to elevated groundwater. RS Eng has addressed this issue by installing a drain on top of the hard pan, around the hardfill to remove groundwater from the building area, refer page 3 of calculations. This has been installed on a number of other properties in the area and along with keeping the dwelling elevated has worked effectively. It is not appropriate for Hawthorn Geddes to comment on RS Eng design approach for the dwelling.

28 May 2021 9:52 am

Thanks

Regards

Julieanne Mollet

Administrator | Sudfelt Construction Ltd - Whangarei / Kaipara Franchisee for G.J. Gardner Homes
Ph: (09) 437 5666 | Web: www.gjgardner.co.nz
[http://www.gjgardner.co.nz/assets/Uploads/Facebook.jpg] [http://www.gjgardner.co.nz/assets/Uploads/Pinterest.jpg] [https://www.gjgardner.co.nz/assets/Uploads/Insta8.jpg]

[http://www.gjgardner.co.nz/assets/Uploads/GJGardner.jpg]

This email, including attachments, may contain information which is confidential or subject to legal privilege or copyright. If you are not the intended recipient, please notify us immediately and then please delete all copies of this email from your system. You must not use, disseminate, distribute or reproduce this email, any attachments, or any part thereof if you are not the intended recipient.

Email communications are not secure and are not guaranteed by us to be free of unauthorised interference, error or virus. Anyone who communicates with us by email is taken to accept this risk. To the maximum extent permitted by law we are not liable for any virus or other defect in this email or in any attachment (or for any unauthorized changes made to or other interference with this email or to any attachment).

Please note that this communication does not designate an information system for the purposes of the Electronic Transactions Act 2002

Email #165827: BC210208

Project ID: 210208
Date Sent: 2021-06-21 09:50:10
Recipient: cathytengineer@gmail.com
Sender: Sharon Campbell
Subject: BC210208: 8 Sampsons Way Dargaville
Message:

Good morning Cathy,

The email address for Ean is incorrect (GJ Gardier rather than GJ Gardner).

I'm not sure of all the communication that you have sent to him.

Are you able to resend with the correct email address?

Regards,

Sharon Campbell
Contractor
Kaipara District Council
Unit 6 - The Hub, 6 Molesworth Drive, Mangawhai 0505
P: (09) 439 3123 | E: buildingsupport@kaipara.govt.nz | W: www.kaipara.govt.nz

Email #166080: BC210208

Project ID: 210208
Date Sent: 2021-06-22 20:34:43
Recipient: ean.dawson@gjgardner.co.nz
Sender: Cathy
Subject: BC210208: 8 Sampsons Way Dargaville
Message:

I contacted Hawthorne Geddes on Friday. The geotechnical report was prepared for the subdivision resource consent rather than specifically for this site. They cannot provide advice on a specific building consent without being engaged to do so. After the discussion with Hawthorne Geddes, the best way forward is to obtain advice on the issue from a Chartered Geotechnical engineer as they are competent to do so. We will also include a building platform construction review and PS4 from a Chartered Geotechnical engineer as a condition of the consent.

Apologies, I first sent this email on Sunday but had entered your email address incorrectly.

Regards

Cathy

Cathy
Specialist Input CPEng
Kaipara District Council
Unit 6 - The Hub, 6 Molesworth Drive, Mangawhai 0505
P: (09) 439 3123 | E: buildingsupport@kaipara.govt.nz | W: www.kaipara.govt.nz

Email #166123: BC210208

Project ID: 210208
Date Sent: 2021-06-23 11:30:13
Recipient: ean.dawson@gjgardner.co.nz
Sender: AlphaOne System
Subject: RE: Re: BC210208: 8 Sampsons Way Dargaville
Message:

Hello

Thank you for your message regarding your application with Kaipara District Council. This is an automated response to confirm your message has been received by the assigned officer for review. You can expect a response within 5 working days.

For further information or enquiries please email 210208@kdc.abcs.co.nz.

Kind regards

Kaipara District Council
Unit 6 - The Hub
6 Molesworth Drive
Mangawhai 0505
www.kaipara.govt.nz

Email #166150: BC210208

Project ID: 210208
Date Sent: 2021-06-23 13:58:00
Recipient: cathytengineer@gmail.com
Sender: Shalisha Blom
Subject: BC210208: A new email has been allocated to you
Message:

Hello Cathy,

A new email for BC210208 has been allocated to you. Please check and take appropriate action.

https://kdc.abcs.co.nz/jobs/210208/communication/?optilbox

— AlphaOne System

Email #166449: BC210208

Project ID: 210208
Date Sent: 2021-06-27 23:21:50
Recipient: sharon.campbell@complynz.co.nz
Sender: Cathy
Subject: BC210208: 8 Sampsons Way Dargaville
Message:

I have now passed this building consent application based on the latest information provided.

Regards

Cathy
Specialist Input CPEng
Kaipara District Council
Unit 6 - The Hub, 6 Molesworth Drive, Mangawhai 0505
P: (09) 439 3123 | E: buildingsupport@kaipara.govt.nz | W: www.kaipara.govt.nz

Email #166469: BC210208

Project ID: 210208
Date Sent: 2021-06-28 11:41:40
Recipient: knewman@kaipara.govt.nz
Sender: Sharon Campbell
Subject: BC210208: 8 Sampsons Way Dargaville
Message:

Good morning Kelsey,

I am ready to do the completion on this consent, but as there have been several site plan revisions I wanted to make sure I have the correct site plan.

If I put a copy of the Approved Plans that I have into the working folder, can you please confirm this is the latest site plan that planning has signed off?
Or alternatively send me a copy of what you have signed off.

Thanks Kelsey.

Note: If you are the wrong person for this request, can you please forward to the right person.

Many thanks,

Sharon Campbell
Contractor
Kaipara District Council
Unit 6 - The Hub, 6 Molesworth Drive, Mangawhai 0505
P: (09) 439 3123 | E: buildingsupport@kaipara.govt.nz | W: www.kaipara.govt.nz

Email #166549: BC210208

Project ID: 210208
Date Sent: 2021-06-28 15:15:04
Recipient: knewman@kaipara.govt.nz
Sender: AlphaOne System
Subject: RE: RE: BC210208: 8 Sampsons Way Dargaville
Message:

Hello

Thank you for your message regarding your application with Kaipara District Council. This is an automated response to confirm your message has been received by the assigned officer for review. You can expect a response within 5 working days.

We accept email attachments in PDF, JPG and PNG format.

REJECTED ATTACHMENTS:
- image001.jpg (1.92kB)

The rejected attachment(s) may be from your signature. If not, please contact the AlphaOne Support Team on 0800 625 3284.

For further information or enquiries please email 210208@kdc.abcs.co.nz.

Kind regards

Kaipara District Council
Unit 6 - The Hub
6 Molesworth Drive
Mangawhai 0505
www.kaipara.govt.nz

Email #166652: BC210208

Project ID: 210208
Date Sent: 2021-06-29 13:15:14
Recipient: sharon.campbell@complynz.co.nz
Sender: Greg Bellam
Subject: BC210208: A new email has been allocated to you
Message:

Hello Sharon Campbell,

A new email for BC210208 has been allocated to you. Please check and take appropriate action.

https://kdc.abcs.co.nz/jobs/210208/communication/?optilbox

— AlphaOne System

Email #166726: BC210208

Project ID: 210208
Date Sent: 2021-06-29 15:59:12
Recipient: knewman@kaipara.govt.nz
Sender: Sharon Campbell
Subject: BC210208: 8 Sampsons Way Dargaville
Message:

Hi Kelsey,

The plans I have are in the working folder under application processing and are called Approved Plans.

If you could take a look and make sure we have the same ones.

Many thanks,

Sharon Campbell
Contractor
Kaipara District Council
Unit 6 - The Hub, 6 Molesworth Drive, Mangawhai 0505
P: (09) 439 3123 | E: buildingsupport@kaipara.govt.nz | W: www.kaipara.govt.nz

==========

Hi Sharon,

That is a very smart idea. Message me when the docs are up in that folder and I will look through and see if they were the correct ones I have approved.

If they are not I will upload the ones I have used.

Ng? mihi nui,

Kelsey

[KDC Logo test June 2015]
Kelsey Newman | Graduate Planner
Kaipara District Council, Private Bag 1001, Dargaville 0340
Freephone: 0800 727 059 | DDI: 09 439 3123 | Cell: 021 391 351

knewman@kaipara.govt.nz | council@kaipara.govt.nz | www.kaipara.govt.nz

From: Kaipara District Council
Sent: Monday, 28 June 2021 11:42 am
To: Kelsey Newman
Cc: allocations@complynz.co.nz
Subject: BC210208: 8 Sampsons Way Dargaville

CAUTION: This email originated from outside Kaipara District Council. Do not click links or open attachments unless you recognise the sender and know the content is safe.

Good morning Kelsey,

I am ready to do the completion on this consent, but as there have been several site plan revisions I wanted to make sure I have the correct site plan.

If I put a copy of the Approved Plans that I have into the working folder, can you please confirm this is the latest site plan that planning has signed off?
Or alternatively send me a copy of what you have signed off.

Thanks Kelsey.

Note: If you are the wrong person for this request, can you please forward to the right person.

Many thanks,

Sharon Campbell
Contractor
Kaipara District Council
Unit 6 - The Hub, 6 Molesworth Drive, Mangawhai 0505
P: (09) 439 3123 | E: buildingsupport@kaipara.govt.nz | W: www.kaipara.govt.nz

_____

_____

DISCLAIMER
This message is for the designated recipient(s) only, and may contain confidential and/or privileged information. If you have received it in error, please delete it and advise the sender immediately. You should not copy or use it for any other purpose, nor disclose its contents to any other person.

Designated Recipient(s): knewman@kaipara.govt.nz, allocations@complynz.co.nz
Sent From: AlphaOne Building Consent System
Sent Date: 28 June 2021 11:41:38 am - Monday

REJECTED ATTACHMENT(S):

Note: The listed file(s) below were rejected because they were not in PDF format.

- image001.jpg

Email #166731: BC210208

Project ID: 210208
Date Sent: 2021-06-29 16:10:08
Recipient: knewman@kaipara.govt.nz
Sender: AlphaOne System
Subject: RE: RE: BC210208: 8 Sampsons Way Dargaville
Message:

Hello

Thank you for your message regarding your application with Kaipara District Council. This is an automated response to confirm your message has been received by the assigned officer for review. You can expect a response within 5 working days.

We accept email attachments in PDF, JPG and PNG format.

REJECTED ATTACHMENTS:
- image001.jpg (1.92kB)

The rejected attachment(s) may be from your signature. If not, please contact the AlphaOne Support Team on 0800 625 3284.

For further information or enquiries please email 210208@kdc.abcs.co.nz.

Kind regards

Kaipara District Council
Unit 6 - The Hub
6 Molesworth Drive
Mangawhai 0505
www.kaipara.govt.nz

Email #166737: BC210208

Project ID: 210208
Date Sent: 2021-06-29 16:15:18
Recipient: knewman@kaipara.govt.nz
Sender: Sharon Campbell
Subject: BC210208: 8 Sampsons Way Dargaville
Message:

Thanks Kelsey,

I don't seem to be able to view the file - is it a PDF doc?

Bit strange....

Sharon Campbell
Contractor
Kaipara District Council
Unit 6 - The Hub, 6 Molesworth Drive, Mangawhai 0505
P: (09) 439 3123 | E: buildingsupport@kaipara.govt.nz | W: www.kaipara.govt.nz

==========

Hiya Sharon,

I just had a wee look and they look good however the site plan is not the plan I have approved. Please see the site plan I have uploaded into that file.

Any questions please do let me know.

Ng? mihi nui,

Kelsey

[KDC Logo test June 2015]
Kelsey Newman | Graduate Planner
Kaipara District Council, Private Bag 1001, Dargaville 0340
Freephone: 0800 727 059 | DDI: 09 439 3123 | Cell: 021 391 351
knewman@kaipara.govt.nz | council@kaipara.govt.nz | www.kaipara.govt.nz

From: Kaipara District Council
Sent: Tuesday, 29 June 2021 3:59 pm
To: Kelsey Newman
Cc: allocations@complynz.co.nz
Subject: BC210208: 8 Sampsons Way Dargaville

CAUTION: This email originated from outside Kaipara District Council. Do not click links or open attachments unless you recognise the sender and know the content is safe.

Hi Kelsey,

The plans I have are in the working folder under application processing and are called Approved Plans.

If you could take a look and make sure we have the same ones.

Many thanks,

Sharon Campbell
Contractor
Kaipara District Council
Unit 6 - The Hub, 6 Molesworth Drive, Mangawhai 0505
P: (09) 439 3123 | E: buildingsupport@kaipara.govt.nz | W: www.kaipara.govt.nz

==========
Hi Sharon,

That is a very smart idea. Message me when the docs are up in that folder and I will look through and see if they were the correct ones I have approved.

If they are not I will upload the ones I have used.

Ng? mihi nui,

Kelsey

[KDC Logo test June 2015]
Kelsey Newman | Graduate Planner
Kaipara District Council, Private Bag 1001, Dargaville 0340
Freephone: 0800 727 059 | DDI: 09 439 3123 | Cell: 021 391 351
knewman@kaipara.govt.nz | council@kaipara.govt.nz | www.kaipara.govt.nz

From: Kaipara District Council
Sent: Monday, 28 June 2021 11:42 am

To: Kelsey Newman
Cc: allocations@complynz.co.nz
Subject: BC210208: 8 Sampsons Way Dargaville

CAUTION: This email originated from outside Kaipara District Council. Do not click links or open attachments unless you recognise the sender and know the content is safe.

Good morning Kelsey,

I am ready to do the completion on this consent, but as there have been several site plan revisions I wanted to make sure I have the correct site plan.

If I put a copy of the Approved Plans that I have into the working folder, can you please confirm this is the latest site plan that planning has signed off?
Or alternatively send me a copy of what you have signed off.

Thanks Kelsey.

Note: If you are the wrong person for this request, can you please forward to the right person.

Many thanks,

Sharon Campbell
Contractor
Kaipara District Council
Unit 6 - The Hub, 6 Molesworth Drive, Mangawhai 0505
P: (09) 439 3123 | E: buildingsupport@kaipara.govt.nz | W: www.kaipara.govt.nz

_____

_____

DISCLAIMER
This message is for the designated recipient(s) only, and may contain confidential and/or privileged information. If you have received it in error, please delete it and advise the sender immediately. You should not copy or use it for any other purpose, nor disclose its contents to any other person.

Designated Recipient(s): knewman@kaipara.govt.nz, allocations@complynz.co.nz
Sent From: AlphaOne Building Consent System
Sent Date: 28 June 2021 11:41:38 am - Monday

REJECTED ATTACHMENT(S):
Note: The listed file(s) below were rejected because they were not in PDF format.
- image001.jpg

_____

_____

DISCLAIMER
This message is for the designated recipient(s) only, and may contain confidential and/or privileged information. If you have received it in error, please delete it and advise the sender immediately. You should not copy or use it for any other purpose, nor disclose its contents to any other person.

Designated Recipient(s): knewman@kaipara.govt.nz, allocations@complynz.co.nz
Sent From: AlphaOne Building Consent System
Sent Date: 29 June 2021 15:59:10 pm - Tuesday

REJECTED ATTACHMENT(S):
Note: The listed file(s) below were rejected because they were not in PDF format.
- image001.jpg

Email #166770: BC210208

Project ID: 210208
Date Sent: 2021-06-30 09:02:10
Recipient: steve@RSEng.co.nz
Sender: Sharon Campbell
Subject: BC210208: 8 Sampsons Way Dargaville
Message:

Good morning,

In doing a final review to finalise and issue the Building Consent, it appears that I haven't received the final revised site plan that planning have approved.

Can you please forward a copy of the final site plan at your earliest convenience including the notations required for the Building consent.
I will place this consent on hold until we have received the correct site plan.

Kind regards,

Sharon Campbell
Contractor 022 697 5120
Kaipara District Council
Unit 6 - The Hub, 6 Molesworth Drive, Mangawhai 0505
P: (09) 439 3123 | E: buildingsupport@kaipara.govt.nz | W: www.kaipara.govt.nz

Email #166824: BC210208

Project ID: 210208
Date Sent: 2021-06-30 12:35:11
Recipient: sharon.campbell@complynz.co.nz
Sender: AlphaOne System
Subject: RE: Fwd: FW: BC210208: 8 Sampsons Way Dargaville
Message:

Hello

Thank you for your message regarding your application with Kaipara District Council. This is an automated response to confirm your message has been received by the assigned officer for review. You can expect a response within 5 working days.

We accept email attachments in PDF, JPG and PNG format.

ACCEPTED ATTACHMENTS:
- 17644 Edge Randell Foundation Design 2021-06-23.pdf (384.87kB)

REJECTED ATTACHMENTS:
- image003.png (6.23kB)
- image001.png (9.45kB)

The rejected attachment(s) may be from your signature. If not, please contact the AlphaOne Support Team on 0800 625 3284.

For further information or enquiries please email 210208@kdc.abcs.co.nz.

Kind regards

Kaipara District Council
Unit 6 - The Hub
6 Molesworth Drive
Mangawhai 0505
www.kaipara.govt.nz

Email #166830: BC210208

Project ID: 210208
Date Sent: 2021-06-30 13:10:04
Recipient: sharon.campbell@complynz.co.nz
Sender: AlphaOne System
Subject: RE: Fwd: Edge Plumbing and Drainage
Message:

Hello

Thank you for your message regarding your application with Kaipara District Council. This is an automated response to confirm your message has been received by the assigned officer for review. You can expect a response within 5 working days.

We accept email attachments in PDF, JPG and PNG format.

ACCEPTED ATTACHMENTS:
- 390076 - EDGE - PLUMBING AND DRAINAGE 30-06-21.pdf (129.37kB)

For further information or enquiries please email 210208@kdc.abcs.co.nz.

Kind regards

Kaipara District Council
Unit 6 - The Hub
6 Molesworth Drive
Mangawhai 0505
www.kaipara.govt.nz

Email #166835: BC210208

Project ID: 210208
Date Sent: 2021-06-30 13:25:28
Recipient: cathytengineer@gmail.com
Sender: Sharon Campbell
Subject: BC210208: 8 Sampsons Way Dargaville
Message:

Good afternoon Cathy,

I have put the final plans, and supporting docs containing the engineering and changed SW design into the working folder, labelled approved plans final, approved specifications final.

In my final review it appears I did not have all the latest drawings and SW design - Site plan was different to planning site plan approved, and I hadn't realised the SW design had changed - subsoil drain to a trench at the rear of the property.

To ensure there is not any other outstanding information that has not been provided to me, can you please check that the latest site plan, egineering and SW drainage is what you have reviewed and approved (with regard to the structural work only of course). I'm fairly confident the set is correct.

I'm ready to approve and issue once I receive confirmation from yourself.

Thanks Cathy.

Sharon Campbell
Contractor
Kaipara District Council
Unit 6 - The Hub, 6 Molesworth Drive, Mangawhai 0505
P: (09) 439 3123 | E: buildingsupport@kaipara.govt.nz | W: www.kaipara.govt.nz

Email #167063: BC210208

Project ID: 210208
Date Sent: 2021-07-01 18:17:34
Recipient: cathytengineer@gmail.com
Sender: Sharon Campbell
Subject: BC210208: 8 Sampsons Way Dargaville
Message:

Hi Cathy,

I realise you're very busy, but I can't really hold this consent much longer and need to get it signed off.

I'm fairly confident that I have the right drawings and calcs, but there is a possibility that the engineer sent you information and not me.

Not sure what happens here, whether you send through?

If you could please have a look at the approved final docs in the working folder to confirm I do have the latest information and the consent can be signed off.

Many thanks,

Sharon Campbell
Contractor
Kaipara District Council
Unit 6 - The Hub, 6 Molesworth Drive, Mangawhai 0505
P: (09) 439 3123 | E: buildingsupport@kaipara.govt.nz | W: www.kaipara.govt.nz

Email #167068: BC210208

Project ID: 210208
Date Sent: 2021-07-01 21:15:08
Recipient: cathytengineer@gmail.com
Sender: AlphaOne System
Subject: RE: Re: BC210208: 8 Sampsons Way Dargaville
Message:

Hello

Thank you for your message regarding your application with Kaipara District Council. This is an automated response to confirm your message has been received by the assigned officer for review. You can expect a response within 5 working days.

For further information or enquiries please email 210208@kdc.abcs.co.nz.

Kind regards

Kaipara District Council
Unit 6 - The Hub
6 Molesworth Drive
Mangawhai 0505
www.kaipara.govt.nz

Email #167109: BC210208

Project ID: 210208
Date Sent: 2021-07-02 12:29:15
Recipient: steve@RSEng.co.nz
Sender: Sharon Campbell
Subject:
BC210208.1 Form 5: Building Consent - 8 Sampsons Way Dargaville
Message:
Dear Sir/Madam,

Please see your attached Issued Building Consent.

I have uploaded the documents for you, you can find them via the Alpha Portal at https://consents-kdc.abcs.co.nz/ - log into your account, go to 'My Applications, click on 'BC', click on 'Documents', click on 'View Documents Issued'.

Please ensure that a copy of all plans, specifications and supporting documents are printed and available on site at all times.

For any further information send your enquiry to 210208@kdc.abcs.co.nz

Kind Regards,

Sharon Campbell
Contractor
Kaipara District Council
Unit 6 - The Hub, 6 Molesworth Drive, Mangawhai 0505
P: (09) 439 3123 | E: buildingsupport@kaipara.govt.nz | W: www.kaipara.govt.nz

Email #167610: BC210208

Project ID: 210208
Date Sent: 2021-07-07 15:45:55
Recipient: smartin@kaipara.govt.nz
Sender: Shalisha Blom
Subject: BC210208: A new email has been allocated to you
Message:

Hello Sharon Martin,

A new email for BC210208 has been allocated to you. Please check and take appropriate action.

https://kdc.abcs.co.nz/jobs/210208/communication/?optilbox

— AlphaOne System

Email #168531: BC210208

Project ID: 210208
Date Sent: 2021-07-15 15:36:19
Recipient: whangarei@gjgardner.co.nz
Sender: Michelle Nepia
Subject:
BC210208: 8 Sampsons Way Dargaville - Invoice for on charge for CS Thomas - ME June 2021
Message:
Good afternoon

Please find attached the Kaipara District Council invoice for on charge of $396.00 for Specialist Engineering Review fees for CS Thomas Consulting

On charged invoices sent are related to Specialist Engineering Fees where we have needed to consult with a CPENG or Chartered Professional Engineer

Payment details are on the Invoice, ensure you reference BC210208 for correct allocation of the payment received

For more information regarding the on charge:
https://www.kaipara.govt.nz/services/building-guidance-consents/specialist-input-engineering-review-of-design

If you have any questions regarding the invoice, please do not hesitate to contact us

Thank you

Kind regards

Michelle Nepia
Technical Support
Kaipara District Council
Unit 6 - The Hub, 6 Molesworth Drive, Mangawhai 0505
P: (09) 439 3123 | E: buildingsupport@kaipara.govt.nz | W: www.kaipara.govt.nz

Email #170477: BC210208

Project ID: 210208
Date Sent: 2021-08-04 16:55:07
Recipient: whangarei@gjgardner.co.nz, rachyledge@gmail.com
Sender: John Dowden
Subject: BC210208 Inspection Report
Message:

Our inspection team have carried out a site inspection on the above project today, please find attached the inspectors site notice for your information.

If you have any queries regarding the content of the site notice please contact the inspector on phone 0800 727 059.

Email #170787: BC210208

Project ID: 210208
Date Sent: 2021-08-09 14:56:31
Recipient:
whangarei@gjgardner.co.nz, aaron@abfoundations.co.nz, rachyledge@gmail.com
Sender: John Dowden
Subject: BC210208 Inspection Report
Message:
Our inspection team have carried out a site inspection on the above project today, please find attached the inspectors site notice for your information.

If you have any queries regarding the content of the site notice please contact the inspector on phone 0800 727 059.

Email #170875: BC210208

Project ID: 210208
Date Sent: 2021-08-10 11:20:03
Recipient: julieanne.mollet@gjgardner.co.nz
Sender: AlphaOne System
Subject:
RE: Re: BC210208: 8 Sampsons Way Dargaville - Invoice for on charge for CS Thomas - ME June 2021
Message:
Hello

Thank you for your message regarding your application with Kaipara District Council. This is an automated response to confirm your message has been received by the assigned officer for review. You can expect a response within 5 working days.

For further information or enquiries please email 210208@kdc.abcs.co.nz.

Kind regards

Kaipara District Council
Unit 6 - The Hub
6 Molesworth Drive
Mangawhai 0505
www.kaipara.govt.nz

Email #170921: BC210208

Project ID: 210208
Date Sent: 2021-08-10 15:29:47
Recipient: jdowden@kaipara.govt.nz
Sender: Greg Bellam
Subject: BC210208: A new email has been allocated to you
Message:

Hello John Dowden,

A new email for BC210208 has been allocated to you. Please check and take appropriate action.

https://kdc.abcs.co.nz/jobs/210208/communication/?optilbox

— AlphaOne System

Email #170922: BC210208

Project ID: 210208
Date Sent: 2021-08-10 15:30:10
Recipient: jdowden@kaipara.govt.nz
Sender: Greg Bellam
Subject: BC210208: A new Document for you
Message:

Hello John Dowden,

Documents on BC210208 have been allocated to you. Please check and take appropriate action.

https://kdc.abcs.co.nz/jobs/210208

— AlphaOne System

Email #170937: BC210208

Project ID: 210208
Date Sent: 2021-08-10 15:41:06
Recipient: jdowden@kaipara.govt.nz
Sender: Greg Bellam
Subject: BC210208: A new email has been allocated to you
Message:

Hello John Dowden,

A new email for BC210208 has been allocated to you. Please check and take appropriate action.

https://kdc.abcs.co.nz/jobs/210208/communication/?optilbox

— AlphaOne System

Email #173113: BC210208

Project ID: 210208
Date Sent: 2021-09-08 11:05:10
Recipient: julieanne.mollet@gjgardner.co.nz
Sender: AlphaOne System
Subject:
RE: Fwd: BC210208: 8 Sampsons Way Dargaville - Invoice for on charge for CS Thomas - ME June 2021
Message:
Hello

Thank you for your message regarding your application with Kaipara District Council. This is an automated response to confirm your message has been received by the assigned officer for review. You can expect a response within 5 working days.

For further information or enquiries please email 210208@kdc.abcs.co.nz.

Kind regards

Kaipara District Council
Unit 6 - The Hub
6 Molesworth Drive
Mangawhai 0505
www.kaipara.govt.nz

Email #173177: BC210208

Project ID: 210208
Date Sent: 2021-09-08 15:10:36
Recipient: mnepia@kaipara.govt.nz
Sender: John Dowden
Subject: BC210208: A new email has been allocated to you
Message:

Hello Michelle Nepia,

A new email for BC210208 has been allocated to you. Please check and take appropriate action.

https://kdc.abcs.co.nz/jobs/210208/communication/?optilbox

— AlphaOne System

Email #173203: BC210208

Project ID: 210208
Date Sent: 2021-09-08 16:01:41
Recipient: cathytengineer@gmail.com
Sender: Michelle Nepia
Subject: BC210208: 8 Sampsons Way Dargaville
Message:

Hello Cathy

Would you mind communicating with Julianne in regards to her below query

The two invoices referred to are April - Inv #184574 and June Inv #194583

Thank you

Kind regards

Michelle Nepia
Technical Support
Kaipara District Council
Unit 6 - The Hub, 6 Molesworth Drive, Mangawhai 0505
P: (09) 439 3123 | E: buildingsupport@kaipara.govt.nz | W: www.kaipara.govt.nz

Hi

I haven't received a response to the below email as yet. Could someone
please come back on this as soon as possible?

Regards
Julieanne Mollet

Administrator | Sudfelt Construction Ltd -
Whangarei / Kaipara Franchisee for G.J. Gardner Homes
Ph: (09) 437 5666 | Web: www.gjgardner.co.nz

[image: http://www.gjgardner.co.nz/assets/Uploads/Facebook.jpg]
[image:
http://www.gjgardner.co.nz/assets/Uploads/Pinterest.jpg]
[image:
https://www.gjgardner.co.nz/assets/Uploads/Insta8.jpg]

[image: http://www.gjgardner.co.nz/assets/Uploads/GJGardner.jpg]

This email, including attachments, may contain information which is confidential or subject to legal privilege or copyright. If you are not the intended recipient, please notify us immediately and then please delete all copies of this email from your system. You must not use, disseminate, distribute or reproduce this email, any attachments, or any part thereof if you are not the intended recipient.

Email communications are not secure and are not guaranteed by us to be free of unauthorised interference, error or virus. Anyone who communicates with us by email is taken to accept this risk. To the maximum extent permitted by law we are not liable for any virus or other defect in this email or in any attachment (or for any unauthorized changes made to or other interference with this email or to any attachment).

Please note that this communication does not designate an information system for the purposes of the Electronic Transactions Act 2002

---------- Forwarded message ---------
From: Julieanne Mollet
Date: Tue, 10 Aug 2021 at 11:15
Subject: Re: BC210208: 8 Sampsons Way Dargaville - Invoice for on charge for CS Thomas - ME June 2021
To:

Hi

Further to the below invoice, we wish to dispute the charge on this. The specialised engineer had already charged 2 hours for the original review of documentation, she then took over 3 weeks to review and respond to our RFI response. We don't believe the invoice is a true reflection of the amount of work done from the engineer, as all she did was put a PS4 on the Building Consent for engineers sign off and had a brief discussion with our Contracts Manager.

Can you please review and advise.

Regards
Julieanne Mollet

Administrator | Sudfelt Construction Ltd -
Whangarei / Kaipara Franchisee for G.J. Gardner Homes
Ph: (09) 437 5666 | Web: www.gjgardner.co.nz

[image: http://www.gjgardner.co.nz/assets/Uploads/Facebook.jpg]
[image:
http://www.gjgardner.co.nz/assets/Uploads/Pinterest.jpg]
[image:
https://www.gjgardner.co.nz/assets/Uploads/Insta8.jpg]

[image: http://www.gjgardner.co.nz/assets/Uploads/GJGardner.jpg]

This email, including attachments, may contain information which is confidential or subject to legal privilege or copyright. If you are not the intended recipient, please notify us immediately and then please delete all copies of this email from your system. You must not use, disseminate, distribute or reproduce this email, any attachments, or any part thereof if you are not the intended recipient.

Email communications are not secure and are not guaranteed by us to be free of unauthorised interference, error or virus. Anyone who communicates with us by email is taken to accept this risk. To the maximum extent permitted by law we are not liable for any virus or other defect in this email or in any attachment (or for any unauthorized changes made to or other interference with this email or to any attachment).

Please note that this communication does not designate an information system for the purposes of the Electronic Transactions Act 2002

On Thu, 15 Jul 2021 at 15:36, Kaipara District Council wrote:

> Good afternoon
>
> Please find attached the Kaipara District Council invoice for on charge of
> $396.00 for Specialist Engineering Review fees for CS Thomas Consulting
>
> On charged invoices sent are related to Specialist Engineering Fees where
> we have needed to consult with a CPENG or Chartered Professional Engineer
>
> Payment details are on the Invoice, ensure you reference BC210208 for
> correct allocation of the payment received
>

> For more information regarding the on charge:
> https://www.kaipara.govt.nz/services/building-guidance-consents/specialist-input-engineering-review-of-design
>
> If you have any questions regarding the invoice, please do not hesitate to
> contact us
>
> Thank you
>
> Kind regards
>
> Michelle Nepia
> Technical Support
> Kaipara District Council
> Unit 6 - The Hub, 6 Molesworth Drive, Mangawhai 0505
> P: (09) 439 3123 | E: buildingsupport@kaipara.govt.nz | W:
> www.kaipara.govt.nz
> ---
> *ATTACHMENTS:*
>
> - BC210208 - KDC Invoice for Oncharge.pdf
>
> - BC210208 - Inv #184583 - ME June 2021.pdf
>
>
>
> ---
> *DISCLAIMER*
> This message is for the designated recipient(s) only, and may contain
> confidential and/or privileged information. If you have received it in
> error, please delete it and advise the sender immediately. You should not
> copy or use it for any other purpose, nor disclose its contents to any
> other person.
>
> Designated Recipient(s): whangarei@gjgardner.co.nz
> Sent From: AlphaOne Building Consent System
> Sent Date: 15 July 2021 15:36:16 pm - Thursday

Email #175755: BC210208

Project ID: 210208
Date Sent: 2021-10-07 14:45:30
Recipient: whangarei@gjgardner.co.nz, rachyledge@gmail.com
Sender: Greg Bellam
Subject: BC210208 Inspection Report
Message:

Our inspection team have carried out a site inspection on the above project today, please find attached the inspectors site notice for your information.

If you have any queries regarding the content of the site notice please contact the inspector on phone 0800 727 059.

Email #178156: BC210208

Project ID: 210208
Date Sent: 2021-11-01 15:21:29
Recipient: whangarei@gjgardner.co.nz, rachyledge@gmail.com
Sender: John Dowden
Subject: BC210208 Inspection Report
Message:

Our inspection team have carried out a site inspection on the above project today, please find attached the inspectors site notice for your information.

If you have any queries regarding the content of the site notice please contact the inspector on phone 0800 727 059.

Email #179119: BC210208

Project ID: 210208
Date Sent: 2021-11-10 15:01:17
Recipient: whangarei@gjgardner.co.nz, rachyledge@gmail.com
Sender: John Dowden
Subject: BC210208 Inspection Report
Message:

Our inspection team have carried out a site inspection on the above project today, please find attached the inspectors site notice for your information.

If you have any queries regarding the content of the site notice please contact the inspector on phone 0800 727 059.

Email #181372: BC210208

Project ID: 210208
Date Sent: 2021-12-02 16:25:54
Recipient:
rachyledge@gmail.com, whangarei@gjgardner.co.nz, steve@RSEng.co.nz, conrad_lienert_design@hotmail.com
Sender: John Dowden
Subject:
BC210208.7 Inspection Report - 8 Sampsons Way Dargaville
Message:
Dear Sir/Madam,

Our inspection team have carried out a site inspection on the above project today, please find attached the inspectors site notice for your information.

If you have any queries regarding the content of the site notice please contact the inspector on phone 0800 727 059.

John Dowden
Building Services Officer
Kaipara District Council
Unit 6 - The Hub, 6 Molesworth Drive, Mangawhai 0505
P: (09) 439 3123 | E: buildingsupport@kaipara.govt.nz | W: www.kaipara.govt.nz

Email #182424: BC210208

Project ID: 210208
Date Sent: 2021-12-14 15:53:08
Recipient:
whangarei@gjgardner.co.nz, advancedmasonrynz@gmail.com, rachyledge@gmail.com
Sender: John Dowden
Subject: BC210208 Inspection Report
Message:
Our inspection team have carried out a site inspection on the above project today, please find attached the inspectors site notice for your information.

If you have any queries regarding the content of the site notice please contact the inspector on phone 0800 727 059.

Email #182973: BC210208

Project ID: 210208
Date Sent: 2021-12-20 16:37:06
Recipient: whangarei@gjgardner.co.nz
Sender: John Dowden
Subject: BC210208 Inspection Report
Message:

Our inspection team have carried out a site inspection on the above project today, please find attached the inspectors site notice for your information.

If you have any queries regarding the content of the site notice please contact the inspector on phone 0800 727 059.

Email #185462: BC210208

Project ID: 210208
Date Sent: 2022-02-01 15:24:25
Recipient:
whangarei@gjgardner.co.nz, aaron@abfoundations.co.nz, rachyledge@gmail.com
Sender: Greg Bellam
Subject: BC210208 Inspection Report
Message:
Our inspection team have carried out a site inspection on the above project today, please find attached the inspectors site notice for your information.

If you have any queries regarding the content of the site notice please contact the inspector on phone 0800 727 059.

Email #190528: BC210208

Project ID: 210208
Date Sent: 2022-03-22 08:20:09
Recipient: whangarei@gjgardner.co.nz, rachyledge@gmail.com
Sender: John Edwards
Subject: BC210208 Inspection Report
Message:

Our inspection team have carried out a site inspection on the above project today, please find attached the inspectors site notice for your information.

If you have any queries regarding the content of the site notice please contact the inspector on phone 0800 727 059.

Email #190648: BC210208

Project ID: 210208
Date Sent: 2022-03-22 16:00:25
Recipient: aaron.brown@kaipara.govt.nz
Sender: Greg Bellam
Subject: BC210208: A new email has been allocated to you
Message:

Hello Aaron Brown,

A new email for BC210208 has been allocated to you. Please check and take appropriate action.

https://kdc.abcs.co.nz/jobs/210208/communication/?optilbox

— AlphaOne System

Email #190694: BC210208

Project ID: 210208
Date Sent: 2022-03-23 08:42:49
Recipient: jedwards@kaipara.govt.nz
Sender: John Dowden
Subject: BC210208: A new email has been allocated to you
Message:

Hello John Edwards,

A new email for BC210208 has been allocated to you. Please check and take appropriate action.

https://kdc.abcs.co.nz/jobs/210208/communication/?optilbox

— AlphaOne System

Email #190744: BC210208

Project ID: 210208
Date Sent: 2022-03-23 12:00:25
Recipient: rachyledge@gmail.com
Sender: Aaron Brown
Subject: BC210208 Inspection Report
Message:

Our inspection team have carried out a site inspection on the above project today, please find attached the inspectors site notice for your information.

If you have any queries regarding the content of the site notice please contact the inspector on phone 0800 727 059.

Email #190746: BC210208

Project ID: 210208
Date Sent: 2022-03-23 12:02:01
Recipient: rachyledge@gmail.com, whangarei@gjgardner.co.nz
Sender: Aaron Brown
Subject:

BC210208 Form 7: Code Compliance Certificate - 8 Sampsons Way Dargaville

Message:

Dear Sir/Madam,

Reference Number: BC210208

Form 7: Code Compliance Certificate

Aaron Brown
Principal Building Lead
Kaipara District Council
Unit 6 - The Hub, 6 Molesworth Drive, Mangawhai 0505
P: (09) 439 3123 | E: buildingsupport@kaipara.govt.nz | W: www.kaipara.govt.nz